GE VERNOVA

G60 Generator Protection System

UR Series Instruction Manual

G60 revision: 7.2x

Manual P/N: 1601-0110-AA7

E83849
LISTED
IND.CONT. EQ.
52TL

DISTRIBUTED NETWORK PROTOCOL level 2 dnp PASSED Level Two Conformance Tested

REGISTERED ISO 9001

WORLDWIDE 10 YEAR WARRANTY

Copyright © 2025 GE Vernova. All rights reserved.

GridBeats, Universal Relay, Multilin, MiCOM, S1 Agile, P40 Agile, DS Agile, EnerVista, CyberSentry, HardFiber, FlexLogic, FlexElement, FlexCurve, FlexAnalog, FlexInteger and FlexState are trademarks or registered trademarks of GE Vernova.

The contents of this manual are the property of GE Vernova. This documentation is furnished on license and may not be reproduced in whole or in part without the permission of GE Vernova. The content of this manual is for informational use only and is subject to change without notice.

It is the responsibility of the user for verifying and validating the suitability of all GE Vernova products. This equipment must be used within its design limits. The proper application including configuration and setting of this product to suit the power system assets is the responsibility of the user, who is also required to ensure that all local or regional safety guidelines are adhered to. Incorrect application of this product could risk damage to property/the environment, personal injuries or fatalities and shall be the sole responsibility of the person/entity applying and qualifying the product for use.

The content in this document has been developed to provide guidance to properly install, configure and maintain this product for its intended applications. This guidance is not intended to cover every possible contingency that may arise during commissioning, operation, service, or maintenance activities. Should you encounter any circumstance’s not clearly addressed in this document, contact your local GE Vernova service site.

IT IS THE SOLE RESPONSIBILITY OF THE USER TO SECURE THEIR NETWORK AND ASSOCIATED DEVICES AGAINST CYBER SECURITY INTRUSIONS OR ATTACKS. GE VERNOVA AND ITS AFFILIATES ARE NOT LIABLE FOR ANY DAMAGES AND/OR LOSSES ARISING FROM OR RELATED TO SUCH SECURITY INTRUSION OR ATTACKS.

ADDENDUM

This addendum outlines items not included in the instruction manual for the G60.

PHASE DISTANCE FAULT TYPE CHARACTERISTICS

Phase distance fault type characteristics were slightly changed between minor version 7.21 and 7.24 firmware releases to allow phase distance operation during some unusual cases, where spurious I_0 can be present during fault. This addendum explains the difference in the firmware implementation for the following minor releases.

a) FIRMWARE 7.21

For phase distance following fault-type characteristic are applied.

FLGAB= ~(AG OR BG) OR I0< max(0.02 pu, I2/16, I1/16)

FLGBC= ~(BG OR CG) OR I0< max(0.02 pu, I2/16, I1/16)

FLGCA= ~(CG OR AG) OR I0< max(0.02 pu, I2/16, I1/16)

where

"~" means inverse operation
I0 is the zero sequence current magnitude
I2 is the negative sequence current magnitude
AG, BG, CG are ground distance single-line-to-ground (SLG) fault-type signatures, explained in the Fault-Type Characteristic section later

This means that fault-type characteristic for the phase distance is confirmed, if there is no SLG fault in the corresponding loop or if zero-sequence current is relatively small, which is true for phase-to-phase or three-phase fault. Phase distance fault type supervision is suppressed during open pole conditions.

b) FIRMWARE 7.24 AND 7.25

Version 7.24 added additional angle between I_1 and I_2 along with I_1 and I_2 level detectors. I_1 phasor is obtained by subtracting pre-fault positive sequence current I1mem from the fault positive sequence current.

θ12=ang(I1)-ang(I2), limit angle 45°

PKP_I0= I0>max(0.02 pu, I2/16, I1/16)

PKP_I2= I2>max(0.02 pu, I0/16, I1/16)

PKP_I1= abs(I1(k)- I1mem)>0.05pu

FLG 3P= PKP_I1 & NOT PKP_I2

For the ABC, rotation phase distance fault type characteristics applied are as follows:

FLGAB= ~(FLG5A OR FLG5B) OR [abs(θ12+60°)<45° AND (PKP_I0 OR PKP_I2)] OR PS_3P

FLGBC= ~(FLG5B OR FLG5C) OR [abs(θ12+180°)<45° AND (PKP_I0 OR PKP_I2)] OR PS_3P

FLGCA= ~(FLG5C OR FLG5A) OR [abs(θ12+300°)<45° AND (PKP_I0 OR PKP_I2)] OR PS_3P

This means that the first check is if the ground elements fault-type comparator, explained in the Fault-Type Characteristic section later), does not operate in the corresponding distance loop. Second, the angle between (I_1 - I_1mem) and I_2 is checked to be within 45° in the corresponding phase distance loop. I_1mem is the pre-fault positive sequence current, which is updated with the actual I_1 phasor of two cycles before fault. Upon 50DD assertion, I_1mem stops updating and is sealed-in for 500 ms. In case any phase distance zone is picked-up after this 500 ms seal-in timer expires, I_1mem continues to be held until either all phase distance zones drop out or for three seconds after any zone is still picked up. After that, I_1mem is updated again. Lastly, condition for the three-phase fault is checked. Phase distance fault type supervision is suppressed during open pole conditions.

c) FIRMWARE 7.26

In order to improve phase distance fault type supervision especially during complex faults and to give user flexibility to disable fault type supervision, following is applicable in this release.

Fault type supervision is designed to ensure dependability of the phase distance operation. It uses first voltages and then currents to ensure giving permission to phase distance for any fault. First the SLG fault type is determined by detecting one phase voltage depressed while two others are not by using the following equation.

SLG= (VA_LOW & NOT VB_LOW & NOT VC_LOW) OR (NOT VA_LOW & VB_LOW & NOT VC_LOW) OR

(NOT VA_LOW & NOT VB_LOW & VC_LOW)

where

VA_LOW = |V_A + V_0| < 0.98 *VBC/$\sqrt{3}$, similarly for B and C phases

Additionally multi-phase fault is determined if at least 2 phases are below 85% of the nominal:

M-PH= (VA < 0.85pu & VB < 0.85pu) OR (VB < 0.85pu & VC < 0.85pu) OR (VC< 0.85pu & VA < 0.85pu)

Permission is always granted to phase distance by setting FLGAB, FLGBC and FLGCA flags to logic '1', unless following condition is satisfied:

PKP_I0 & PKP_I2 & SLG & NOT M-PH,

meaning that if there are negative- and zero-sequence currents present in the fault signal, voltage signatures indicate presence of the SLG fault and not multi-phase fault. If at least one of these conditions is not satisfied, permission to be continued granted to all phase distance loop.

But in case this condition is satisfied, angles between I_0 and I_2 are additionally checked to still grant permission to the phase distance loops, shown below for the ABC rotation.

If abs[ang(I_0)-ang(I_2)+120°] <70°, then FLGAB=1,

If abs[ang(I_0)-ang(I_2)+240°] <70°, then FLGCA=1,

If abs[ang(I_0)-ang(I_2)] <70°, then FLGBC=1,

Phase distance fault type supervision is suppressed during open pole conditions and for delta connected VTs.

Fault type supervision is applied to phase distance zone1 to zone 3 only with an option to disable fault type supervision by setting phase distance zone 5 Voltage level setting to non-zero-value (regardless zone 5 is enabled or not). G60 and L60 relays are not employing fault type supervision for the phase distance in all zones.

a) FAULT-TYPE CHARACTERISTIC

The limit angle of the comparator is not adjustable and equals 50°. The fault-type characteristic is intended to block the ground distance elements during double-line-to-ground faults. The fault-type supervision is suppressed during open pole conditions.

Phase elements supervision is applied to block phase distance elements operation during SLG faults. This is done by first checking if the ground elements fault-type comparator, shown above, does not operate in the corresponding distance loop and secondly confirming that fault type is matching phase-to-phase or three-phase signatures.

Table 0–1: DIRECTIONAL MHO PHASE DISTANCE FUNCTIONS

CHARACTERISTIC	COMPARATOR INPUTS		LIMIT ANGLE
Variable mho	$I \times Z - V$	V_1M	COMP LIMIT
Reactance	$I \times Z - V$	$I \times Z$	COMP LIMIT
Directional	$I \times Z_D$	V_1M	DIR COMP LIMIT
Fault type	NOT SLG		Removed during open pole conditions

Table 0–2: DIRECTIONAL QUADRILATERAL PHASE DISTANCE FUNCTIONS

CHARACTERISTIC	COMPARATOR INPUTS		LIMIT ANGLE
Reactance	$I \times Z - V$	$I \times Z$	COMP LIMIT
Directional	$I \times Z_D$	V_1M	DIR COMP LIMIT
Right Blinder	$I \times Z_R - V$	$I \times Z_R$	90°
Left Blinder	$I \times Z_L - V$	$I \times Z_L$	90°
Fault type	NOT SLG		Removed during open pole conditions

Table 0–1: NON-DIRECTIONAL MHO PHASE DISTANCE FUNCTIONS

CHARACTERISTIC	COMPARATOR INPUTS		LIMIT ANGLE
Offset mho	$I \times Z - V$	$V\text{-}I \times Z_{REV}$	COMP LIMIT
Fault type	NOT SLG		Removed during open pole conditions

Table 0–2: NON-DIRECTIONAL QUADRILATERAL PHASE DISTANCE FUNCTIONS

CHARACTERISTIC	COMPARATOR INPUTS		LIMIT ANGLE
Forward Reactance	$I \times Z - V$	$I \times Z$	COMP LIMIT
Reverse Reactance	$I \times Z_{REV} - V$	$I \times Z_{REV}$	COMP LIMIT
Right Blinder	$I \times Z_R - V$	$I \times Z_R$	90°
Left Blinder	$I \times Z_L - V$	$I \times Z_L$	90°
Fault type	NOT SLG		Removed during open pole conditions

a) SLG FAULT

An AG fault occurs close to the considered relay. Immediately after the fault, the disturbance detector (50DD) picks-up and activates the phase selector. The phase selector recognizes an AG fault by asserting its PHASE SELECT AG operand. Ground distance zone 1 (AG element) responds to the fault.

At this moment, the request to trip is placed for the trip output. As the fault is recognized as an AG fault, the TRIP PHASE A operand is asserted by the trip output. This signal is passed to the breaker control scheme and results in tripping pole A of the breaker.

ADDENDUM

1. GETTING STARTED

1.1 IMPORTANT PROCEDURES
1.1.1 CAUTIONS AND WARNINGS 1-1
1.1.2 INSPECTION PROCEDURE 1-2

1.2 UR OVERVIEW
1.2.1 INTRODUCTION TO THE UR 1-3
1.2.2 HARDWARE ARCHITECTURE 1-3
1.2.3 SOFTWARE ARCHITECTURE 1-4

1.3 ENERVISTA UR SETUP SOFTWARE
1.3.1 SYSTEM REQUIREMENTS 1-5
1.3.2 INSTALLATION 1-5
1.3.3 CONFIGURING THE G60 FOR SOFTWARE ACCESS 1-6
1.3.4 USING THE QUICK CONNECT FEATURE 1-9
1.3.5 CONNECTING TO THE G60 RELAY 1-15
1.3.6 SETTING UP CYBERSENTRY AND CHANGING DEFAULT PASSWORD 1-17

1.4 UR HARDWARE
1.4.1 MOUNTING AND WIRING 1-18
1.4.2 COMMUNICATIONS 1-18
1.4.3 FACEPLATE DISPLAY 1-18

1.5 USING THE RELAY
1.5.1 FACEPLATE KEYPAD 1-19
1.5.2 MENU NAVIGATION 1-19
1.5.3 MENU HIERARCHY 1-19
1.5.4 RELAY ACTIVATION 1-20
1.5.5 RELAY PASSWORDS 1-20
1.5.6 FLEXLOGIC CUSTOMIZATION 1-20
1.5.7 COMMISSIONING 1-21

2. PRODUCT DESCRIPTION

2.1 INTRODUCTION
2.1.1 OVERVIEW 2-1
2.1.2 SECURITY 2-3
2.1.3 IEC 870-5-103 PROTOCOL 2-7

2.2 ORDER CODES
2.2.1 OVERVIEW 2-8
2.2.2 ORDER CODES WITH ENHANCED CT/VT MODULES 2-8
2.2.3 ORDER CODES WITH PROCESS BUS MODULES 2-11
2.2.4 REPLACEMENT MODULES 2-14

2.3 SIGNAL PROCESSING
2.3.1 UR SIGNAL PROCESSING 2-16

2.4 SPECIFICATIONS
2.4.1 PROTECTION ELEMENTS 2-18
2.4.2 USER-PROGRAMMABLE ELEMENTS 2-23
2.4.3 MONITORING 2-24
2.4.4 METERING 2-24
2.4.5 INPUTS 2-25
2.4.6 POWER SUPPLY 2-26
2.4.7 OUTPUTS 2-27
2.4.8 FIELD AND STATOR GROUND MODULES 2-28
2.4.9 COMMUNICATION PROTOCOLS 2-29
2.4.10 INTER-RELAY COMMUNICATIONS 2-30
2.4.11 ENVIRONMENTAL 2-31
2.4.12 TYPE TESTS 2-32
2.4.13 PRODUCTION TESTS 2-32
2.4.14 APPROVALS 2-33
2.4.15 MAINTENANCE 2-33

3. HARDWARE

3.1 DESCRIPTION
3.1.1 PANEL CUTOUT 3-1

3.1.2 MODULE WITHDRAWAL AND INSERTION 3-7
3.1.3 REAR TERMINAL LAYOUT 3-9

3.2 WIRING

3.2.1 TYPICAL WIRING 3-11
3.2.2 DIELECTRIC STRENGTH 3-13
3.2.3 CONTROL POWER 3-13
3.2.4 CT/VT MODULES 3-14
3.2.5 PROCESS BUS MODULES 3-16
3.2.6 CONTACT INPUTS AND OUTPUTS 3-16
3.2.7 TRANSDUCER INPUTS/OUTPUTS 3-27
3.2.8 RS232 FACEPLATE PORT 3-29
3.2.9 CPU COMMUNICATION PORTS 3-29
3.2.10 IRIG-B 3-33

3.3 DIRECT INPUT AND OUTPUT COMMUNICATIONS MODULES

3.3.1 DESCRIPTION 3-34
3.3.2 FIBER: LED AND ELED TRANSMITTERS 3-35
3.3.3 FIBER-LASER TRANSMITTERS 3-36
3.3.4 G.703 INTERFACE 3-38
3.3.5 RS422 INTERFACE 3-41
3.3.6 RS422 AND FIBER INTERFACE 3-43
3.3.7 G.703 AND FIBER INTERFACE 3-44
3.3.8 IEEE C37.94 INTERFACE 3-44
3.3.9 C37.94SM INTERFACE 3-48

3.4 FIELD AND STATOR GROUND MODULES

3.4.1 OVERVIEW 3-52
3.4.2 FIELD GROUND LOW-VOLTAGE PROTECTION SYSTEM 3-53
3.4.3 FIELD GROUND HIGH-VOLTAGE PROTECTION SYSTEM 3-56
3.4.4 STATOR GROUND PROTECTION SYSTEM 3-63
3.4.5 UPGRADING FIRMWARE 3-70

4. HUMAN INTERFACES

4.1 ENERVISTA UR SETUP SOFTWARE INTERFACE

4.1.1 INTRODUCTION 4-1
4.1.2 CREATING A SITE LIST 4-1
4.1.3 ENERVISTA UR SETUP OVERVIEW 4-1
4.1.4 ENERVISTA UR SETUP MAIN WINDOW 4-3

4.2 EXTENDED ENERVISTA UR SETUP FEATURES

4.2.1 SETTINGS TEMPLATES 4-4
4.2.2 SECURING AND LOCKING FLEXLOGIC EQUATIONS 4-8
4.2.3 SETTINGS FILE TRACEABILITY 4-10

4.3 FACEPLATE INTERFACE

4.3.1 FACEPLATE 4-13
4.3.2 LED INDICATORS 4-14
4.3.3 CUSTOM LABELING OF LEDS 4-17
4.3.4 DISPLAY 4-22
4.3.5 KEYPAD 4-22
4.3.6 BREAKER CONTROL 4-22
4.3.7 MENUS 4-23
4.3.8 CHANGING SETTINGS 4-26

5. SETTINGS

5.1 OVERVIEW

5.1.1 SETTINGS MENU 5-1
5.1.2 INTRODUCTION TO ELEMENTS 5-4
5.1.3 INTRODUCTION TO AC SOURCES 5-5

5.2 PRODUCT SETUP

5.2.1 SECURITY 5-8
5.2.2 DISPLAY PROPERTIES 5-24
5.2.3 CLEAR RELAY RECORDS 5-25
5.2.4 COMMUNICATIONS 5-26
5.2.5 MODBUS USER MAP 5-65

5.2.6 REAL TIME CLOCK 5-65
5.2.7 USER-PROGRAMMABLE FAULT REPORTS 5-70
5.2.8 OSCILLOGRAPHY 5-71
5.2.9 DATA LOGGER 5-74
5.2.10 USER-PROGRAMMABLE LEDS 5-75
5.2.11 USER-PROGRAMMABLE SELF TESTS 5-78
5.2.12 CONTROL PUSHBUTTONS 5-79
5.2.13 USER-PROGRAMMABLE PUSHBUTTONS 5-81
5.2.14 FLEX STATE PARAMETERS 5-85
5.2.15 USER-DEFINABLE DISPLAYS 5-86
5.2.16 DIRECT INPUTS/OUTPUTS 5-88
5.2.17 TELEPROTECTION 5-96
5.2.18 INSTALLATION 5-97

5.3 REMOTE RESOURCES

5.3.1 REMOTE RESOURCES CONFIGURATION 5-98

5.4 SYSTEM SETUP

5.4.1 AC INPUTS 5-99
5.4.2 POWER SYSTEM 5-100
5.4.3 SIGNAL SOURCES 5-102
5.4.4 BREAKERS 5-105
5.4.5 DISCONNECT SWITCHES 5-109
5.4.6 FLEXCURVES 5-112
5.4.7 PHASOR MEASUREMENT UNIT 5-119

5.5 FLEXLOGIC

5.5.1 INTRODUCTION TO FLEXLOGIC 5-143
5.5.2 FLEXLOGIC RULES 5-155
5.5.3 FLEXLOGIC EVALUATION 5-155
5.5.4 FLEXLOGIC EXAMPLE 5-156
5.5.5 FLEXLOGIC EQUATION EDITOR 5-161
5.5.6 FLEXLOGIC TIMERS 5-161
5.5.7 FLEXELEMENTS 5-162
5.5.8 NON-VOLATILE LATCHES 5-167

5.6 GROUPED ELEMENTS

5.6.1 OVERVIEW 5-168
5.6.2 SETTING GROUP 5-168
5.6.3 DISTANCE 5-170
5.6.4 POWER SWING DETECT (ANSI 68) 5-178
5.6.5 STATOR DIFFERENTIAL (ANSI 87S) 5-188
5.6.6 PHASE CURRENT 5-191
5.6.7 NEUTRAL CURRENT 5-202
5.6.8 GROUND CURRENT 5-209
5.6.9 NEGATIVE SEQUENCE CURRENT 5-218
5.6.10 GENERATOR UNBALANCE (ANSI 46) 5-223
5.6.11 SPLIT PHASE PROTECTION (ANSI 50SP) 5-226
5.6.12 BREAKER FAILURE (ANSI 50BF) 5-231
5.6.13 VOLTAGE ELEMENTS 5-239
5.6.14 LOSS OF EXCITATION (ANSI 40) 5-251
5.6.15 ACCIDENTAL ENERGIZATION (ANSI 50/27) 5-253
5.6.16 SENSITIVE DIRECTIONAL POWER (ANSI 32) 5-255
5.6.17 STATOR GROUND 5-258
5.6.18 FIELD GROUND FAULT PROTECTION (ANSI 64F) 5-268

5.7 CONTROL ELEMENTS

5.7.1 OVERVIEW 5-274
5.7.2 TRIP BUS 5-274
5.7.3 SETTING GROUPS 5-276
5.7.4 SELECTOR SWITCH 5-279
5.7.5 UNDERFREQUENCY (ANSI 81U) 5-285
5.7.6 OVERFREQUENCY (ANSI 81O) 5-286
5.7.7 FREQUENCY RATE OF CHANGE (ANSI 81R) 5-287
5.7.8 FREQUENCY OUT-OF-BAND ACCUMULATION 5-289
5.7.9 SYNCHROCHECK (ANSI 25) 5-291
5.7.10 DIGITAL ELEMENTS 5-296
5.7.11 DIGITAL COUNTERS 5-299
5.7.12 MONITORING ELEMENTS 5-301

5.8 INPUTS/OUTPUTS

5.8.1 CONTACT INPUTS 5-313
5.8.2 VIRTUAL INPUTS 5-315
5.8.3 CONTACT OUTPUTS 5-316
5.8.4 VIRTUAL OUTPUTS 5-319
5.8.5 REMOTE DEVICES 5-319
5.8.6 REMOTE INPUTS 5-321
5.8.7 REMOTE DOUBLE-POINT STATUS INPUTS 5-322
5.8.8 REMOTE OUTPUTS 5-322
5.8.9 RESETTING 5-323
5.8.10 DIRECT INPUTS AND OUTPUTS 5-323
5.8.11 TELEPROTECTION INPUTS AND OUTPUTS 5-327
5.8.12 IEC 61850 GOOSE ANALOGS 5-329
5.8.13 IEC 61850 GOOSE INTEGERS 5-330

5.9 TRANSDUCER INPUTS AND OUTPUTS

5.9.1 DCMA INPUTS 5-331
5.9.2 RTD INPUTS 5-332
5.9.3 RRTD INPUTS 5-334
5.9.4 DCMA OUTPUTS 5-338

5.10 TESTING

5.10.1 TEST MODE 5-342
5.10.2 PHASOR MEASUREMENT UNIT TEST VALUES 5-343
5.10.3 FORCE CONTACT INPUTS 5-344
5.10.4 FORCE CONTACT OUTPUTS 5-345

6. ACTUAL VALUES

6.1 OVERVIEW

6.1.1 ACTUAL VALUES MENU 6-1

6.2 STATUS

6.2.1 CONTACT INPUTS 6-4
6.2.2 VIRTUAL INPUTS 6-4
6.2.3 REMOTE INPUTS 6-4
6.2.4 REMOTE DOUBLE-POINT STATUS INPUTS 6-5
6.2.5 TELEPROTECTION INPUTS 6-5
6.2.6 CONTACT OUTPUTS 6-5
6.2.7 VIRTUAL OUTPUTS 6-6
6.2.8 REMOTE DEVICES 6-6
6.2.9 DIGITAL COUNTERS 6-7
6.2.10 SELECTOR SWITCHES 6-7
6.2.11 FLEX STATES 6-7
6.2.12 ETHERNET 6-7
6.2.13 REAL TIME CLOCK SYNCHRONIZING 6-8
6.2.14 DIRECT INPUTS 6-9
6.2.15 DIRECT DEVICES STATUS 6-9
6.2.16 IEC 61850 GOOSE INTEGERS 6-10
6.2.17 EGD PROTOCOL STATUS 6-10
6.2.18 TELEPROTECTION CHANNEL TESTS 6-11
6.2.19 REMAINING CONNECTION STATUS 6-11
6.2.20 PARALLEL REDUNDANCY PROTOCOL (PRP) STATUS 6-12

6.3 METERING

6.3.1 METERING CONVENTIONS 6-13
6.3.2 STATOR DIFFERENTIAL 6-16
6.3.3 SOURCES 6-16
6.3.4 SYNCHROCHECK 6-21
6.3.5 TRACKING FREQUENCY 6-22
6.3.6 FREQUENCY RATE OF CHANGE 6-22
6.3.7 FREQUENCY OUT-OF-BAND ACCUMULATION 6-22
6.3.8 FLEXELEMENTS 6-23
6.3.9 IEC 61580 GOOSE ANALOG VALUES 6-24
6.3.10 SENSITIVE DIRECTIONAL POWER 6-24
6.3.11 STATOR GROUND 6-24
6.3.12 SUB-HARMONIC STATOR GROUND 6-25
6.3.13 FIELD GROUND 6-25
6.3.14 VOLTS PER HERTZ 6-25

6.3.15 RESTRICTED GROUND FAULT 6-26
6.3.16 PHASOR MEASUREMENT UNIT 6-26
6.3.17 PMU AGGREGATOR 6-27
6.3.18 TRANSDUCER INPUTS AND OUTPUTS 6-27
6.3.19 DISTANCE 6-27

6.4 REMOTE RESOURCES
6.4.1 FIELD UNIT 6-30

6.5 RECORDS
6.5.1 USER PROGRAMMABLE FAULT REPORTS 6-31
6.5.2 EVENT RECORDS 6-31
6.5.3 OSCILLOGRAPHY 6-31
6.5.4 DATA LOGGER 6-32
6.5.5 PHASOR MEASUREMENT UNIT RECORDS 6-32

6.6 PRODUCT INFORMATION
6.6.1 MODEL INFORMATION 6-33
6.6.2 FIRMWARE REVISIONS 6-33

7. COMMANDS AND TARGETS

7.1 COMMANDS
7.1.1 COMMANDS MENU 7-1
7.1.2 VIRTUAL INPUTS 7-1
7.1.3 CLEAR RECORDS 7-2
7.1.4 SET DATE AND TIME 7-2
7.1.5 RELAY MAINTENANCE 7-3
7.1.6 PHASOR MEASUREMENT UNIT ONE-SHOT 7-4
7.1.7 SECURITY 7-5

7.2 TARGETS
7.2.1 TARGETS MENU 7-7
7.2.2 TARGET MESSAGES 7-7
7.2.3 RELAY SELF-TESTS 7-7

8. THEORY OF OPERATION

8.1 PHASE DISTANCE THROUGH POWER TRANSFORMERS
8.1.1 DESCRIPTION 8-1
8.1.2 EXAMPLE 8-4

8.2 SATURATION DETECTOR
8.2.1 CT SATURATION DETECTION 8-6

9. APPLICATION OF SETTINGS

9.1 SETTING EXAMPLE
9.1.1 DESCRIPTION 9-1
9.1.2 SYSTEM SETUP 9-1
9.1.3 POWER SYSTEM 9-2
9.1.4 SIGNAL SOURCES 9-2
9.1.5 STATOR DIFFERENTIAL 9-3
9.1.6 GENERATOR UNBALANCE 9-3
9.1.7 LOSS OF EXCITATION 9-4
9.1.8 REVERSE POWER 9-5
9.1.9 SYSTEM BACKUP OVERCURRENT 9-6
9.1.10 BACKUP DISTANCE 9-7
9.1.11 STATOR GROUND FAULT 9-8
9.1.12 OVEREXCITATION 9-10
9.1.13 INPUTS/OUTPUTS 9-11
9.1.14 FREQUENCY 9-13
9.1.15 ACCIDENTAL ENERGIZATION 9-13
9.1.16 FLEXLOGIC 9-14

9.2 PHASE DISTANCE THROUGH POWER TRANSFORMERS
9.2.1 OVERVIEW 9-15
9.2.2 EXAMPLE 9-16

10. COMMISSIONING

10.1 TESTING

10.1.1 TESTING UNDERFREQUENCY AND OVERFREQUENCY ELEMENTS 10-1

11. MAINTENANCE

11.1 MODULES

11.1.1 REPLACE A MODULE 11-1

11.2 BATTERIES

11.2.1 REPLACE BATTERY 11-3
11.2.2 DISPOSE OF BATTERY 11-5

11.3 UNINSTALL AND CLEAR FILES AND DATA

11.3.1 UNINSTALL AND CLEAR FILES AND DATA 11-8

11.4 REPAIRS

11.4.1 REPAIRS 11-9

11.5 STORAGE

11.5.1 STORAGE 11-10

11.6 DISPOSAL

11.6.1 DISPOSAL 11-11

A. FLEXANALOG AND FLEXINTEGER PARAMETERS

A.1 PARAMETER LISTS

A.1.1 FLEXANALOG ITEMS A-1
A.1.2 FLEXINTEGER ITEMS A-29

B. MODBUS COMMUNICATIONS

B.1 MODBUS RTU PROTOCOL

B.1.1 INTRODUCTION B-1
B.1.2 PHYSICAL LAYER B-1
B.1.3 DATA LINK LAYER B-1
B.1.4 MODBUS RTU CRC-16 ALGORITHM B-2

B.2 MODBUS FUNCTION CODES

B.2.1 SUPPORTED FUNCTION CODES B-4
B.2.2 READ ACTUAL VALUES OR SETTINGS (FUNCTION CODE 03/04H) B-4
B.2.3 EXECUTE OPERATION (FUNCTION CODE 05H) B-5
B.2.4 STORE SINGLE SETTING (FUNCTION CODE 06H) B-5
B.2.5 STORE MULTIPLE SETTINGS (FUNCTION CODE 10H) B-6
B.2.6 EXCEPTION RESPONSES B-6

B.3 FILE TRANSFERS

B.3.1 OBTAINING RELAY FILES VIA MODBUS B-7

B.4 MEMORY MAPPING

B.4.1 MODBUS MEMORY MAP B-9
B.4.2 DATA FORMATS B-81

C. IEC 61850 COMMUNICATIONS

C.1 OVERVIEW

C.1.1 INTRODUCTION C-1
C.1.2 COMMUNICATION PROFILES C-1
C.1.3 FILE TRANSFER BY IEC 61850 ..... C-2

C.2 SERVER DATA ORGANIZATION

C.2.1 OVERVIEW C-3
C.2.2 GGIO1: DIGITAL STATUS VALUES C-3
C.2.3 GGIO2: DIGITAL CONTROL VALUES C-3
C.2.4 GGIO3: DIGITAL STATUS AND ANALOG VALUES FROM GOOSE DATA C-3
C.2.5 GGIO4: GENERIC ANALOG MEASURED VALUES C-3
C.2.6 MMXU: ANALOG MEASURED VALUES C-4

C.2.7 PROTECTION AND OTHER LOGICAL NODES C-4

C.3 SERVER FEATURES AND CONFIGURATION

C.3.1 BUFFERED/UNBUFFERED REPORTING C-6
C.3.2 FILE TRANSFER C-6
C.3.3 TIMESTAMPS AND SCANNING C-6
C.3.4 LOGICAL DEVICE NAME C-6
C.3.5 LOCATION C-6
C.3.6 LOGICAL NODE NAME PREFIXES C-7
C.3.7 CONNECTION TIMING C-7
C.3.8 NON-IEC 61850 DATA C-7
C.3.9 COMMUNICATION SOFTWARE UTILITIES C-7

C.4 GENERIC SUBSTATION EVENT SERVICES: GSSE AND GOOSE

C.4.1 OVERVIEW C-8
C.4.2 GSSE CONFIGURATION C-8
C.4.3 FIXED GOOSE C-8
C.4.4 CONFIGURABLE GOOSE C-8
C.4.5 ETHERNET MAC ADDRESS FOR GSSE/GOOSE C-11
C.4.6 GSSE ID AND GOOSE ID SETTINGS C-11

C.5 IEC 61850 IMPLEMENTATION VIA ENERVISTA UR SETUP

C.5.1 OVERVIEW C-12
C.5.2 CONFIGURING IEC 61850 SETTINGS C-13
C.5.3 ABOUT ICD FILES C-14
C.5.4 CREATING AN ICD FILE WITH ENERVISTA UR SETUP C-18
C.5.5 ABOUT SCD FILES C-18
C.5.6 IMPORTING AN SCD FILE WITH ENERVISTA UR SETUP C-22

C.6 ACSI CONFORMANCE

C.6.1 ACSI BASIC CONFORMANCE STATEMENT C-24
C.6.2 ACSI MODELS CONFORMANCE STATEMENT C-24
C.6.3 ACSI SERVICES CONFORMANCE STATEMENT C-25

C.7 LOGICAL NODES

C.7.1 LOGICAL NODES TABLE C-28

D. IEC 60870-5-103 COMMUNICATIONS

D.1 IEC 60870-5-103

D.1.1 OVERVIEW D-1
D.1.2 FACTOR AND OFFSET CALCULATION TO TRANSMIT MEASURAND D-1
D.1.3 INTEROPERABILITY DOCUMENT D-2

E. IEC 60870-5-104 COMMUNICATIONS

E.1 IEC 60870-5-104

E.1.1 INTEROPERABILITY DOCUMENT E-1
E.1.2 IEC 60870-5-104 POINT LIST E-9

F. DNP COMMUNICATIONS

F.1 DEVICE PROFILE DOCUMENT

F.1.1 DNP V3.00 DEVICE PROFILE F-1
F.1.2 IMPLEMENTATION TABLE F-4

F.2 DNP POINT LISTS

F.2.1 BINARY INPUT POINTS F-8
F.2.2 BINARY AND CONTROL RELAY OUTPUT F-9
F.2.3 COUNTERS F-10
F.2.4 ANALOG INPUTS F-11

G. RADIUS SERVER

G.1 RADIUS SERVER CONFIGURATION

G.1.1 RADIUS SERVER CONFIGURATION G-1

H. MISCELLANEOUS

H.1 CHANGE NOTES

H.1.1 REVISION HISTORY H-1
H.1.2 CHANGES TO THE G60 MANUAL H-2

H.2 ABBREVIATIONS

H.2.1 STANDARD ABBREVIATIONS H-5

H.3 WARRANTY

H.3.1 GE MULTILIN WARRANTY H-8

INDEX

Use this chapter for initial setup of your new G60 Generator Protection System.

1.1.1 CAUTIONS AND WARNINGS

Before attempting to install or use the device, review all safety indicators in this document to help prevent injury, equipment damage, or downtime.

The following safety and equipment symbols are used in this document.

Indicates a hazardous situation which, if not avoided, will result in death or serious injury.

Indicates a hazardous situation which, if not avoided, could result in death or serious injury.

Indicates a hazardous situation which, if not avoided, could result in minor or moderate injury.

Indicates practices not related to personal injury.

a) GENERAL CAUTIONS AND WARNINGS

The following general safety precautions and warnings apply.

Ensure that all connections to the product are correct so as to avoid accidental risk of shock and/or fire, for example such as can arise from high voltage connected to low voltage terminals.

Follow the requirements of this manual, including adequate wiring size and type, terminal torque settings, voltage, current magnitudes applied, and adequate isolation/clearance in external wiring from high to low voltage circuits.

Use the device only for its intended purpose and application.

Ensure that all ground paths are uncompromised for safety purposes during device operation and service.

Ensure that the control power applied to the device, the AC current, and voltage input match the ratings specified on the relay nameplate. Do not apply current or voltage in excess of the specified limits.

Only qualified personnel are to operate the device. Such personnel must be thoroughly familiar with all safety cautions and warnings in this manual and with applicable country, regional, utility, and plant safety regulations.

Hazardous voltages can exist in the power supply and at the device connection to current transformers, voltage transformers, control, and test circuit terminals. Make sure all sources of such voltages are isolated prior to attempting work on the device.

Hazardous voltages can exist when opening the secondary circuits of live current transformers. Make sure that current transformer secondary circuits are shorted out before making or removing any connection to the current transformer (CT) input terminals of the device.

For tests with secondary test equipment, ensure that no other sources of voltages or currents are connected to such equipment and that trip and close commands to the circuit breakers or other switching apparatus are isolated, unless this is required by the test procedure and is specified by appropriate utility/plant procedure.

When the device is used to control primary equipment, such as circuit breakers, isolators, and other switching apparatus, all control circuits from the device to the primary equipment must be isolated while personnel are working on or around this primary equipment to prevent any inadvertent command from this device.

Use an external disconnect to isolate the mains voltage supply.

Personal safety can be affected if the product is physically modified by the end user. Modifications to the product outside of recommended wiring configuration, hardware, or programming boundaries is not recommended end-use practice. Product disassembly and repairs are not permitted. All service needs to be conducted by the factory.

LED transmitters are classified as IEC 60825-1 Accessible Emission Limit (AEL) Class 1M. Class 1M devices are considered safe to the unaided eye. Do not view directly with optical instruments.

NOTICE This product is rated to Class A emissions levels and is to be used in Utility, Substation Industrial environments. Not to be used near electronic devices rated for Class B levels.

1.1.2 INSPECTION PROCEDURE

1. Open the relay packaging and inspect the unit for physical damage.
2. View the rear nameplate and verify that the correct model has been ordered and delivered. The model number is at the top right.

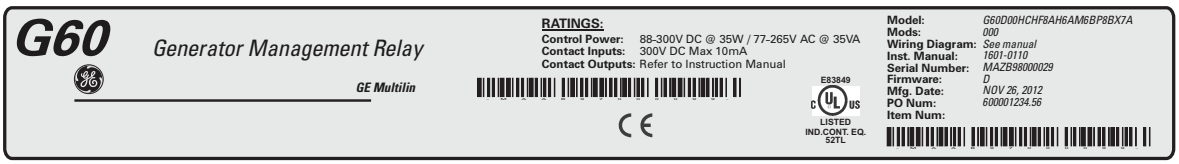

830742A3.CDR

Figure 1–1: REAR NAMEPLATE (EXAMPLE)

3. Ensure that the following items are included:
   - Instruction manual (if ordered)
   - GE EnerVista™ DVD (includes the EnerVista UR Setup software and manuals in PDF format)
   - Mounting screws
4. If there is any noticeable physical damage, or any of the contents listed are missing, contact GE Grid Solutions as follows.

GE GRID SOLUTIONS CONTACT INFORMATION AND CALL CENTER FOR PRODUCT SUPPORT:

GE Grid Solutions
650 Markland Street
Markham, Ontario
Canada L6C 0M1

TELEPHONE: Worldwide +1 905 927 7070
Europe/Middle East/Africa +34 94 485 88 54
North America toll-free 1 800 547 8629
FAX: +1 905 927 5098
E-MAIL: Worldwide multilin.tech@ge.com
Europe multilin.tech.euro@ge.com
HOME PAGE: http://www.gegridsolutions.com/multilin

For updates to the instruction manual, firmware, and software, visit the GE Grid Solutions website.

1.2.1 INTRODUCTION TO THE UR

The GE Universal Relay (UR) series is a new generation of digital, modular, and multifunction equipment that is easily incorporated into automation systems, at both the station and enterprise levels.

1.2.2 HARDWARE ARCHITECTURE

a) UR BASIC DESIGN

The UR is a digital-based device containing a central processing unit (CPU) that handles multiple types of input and output signals. The UR device can communicate over a local area network (LAN) with an operator interface, a programming device, or another UR device.

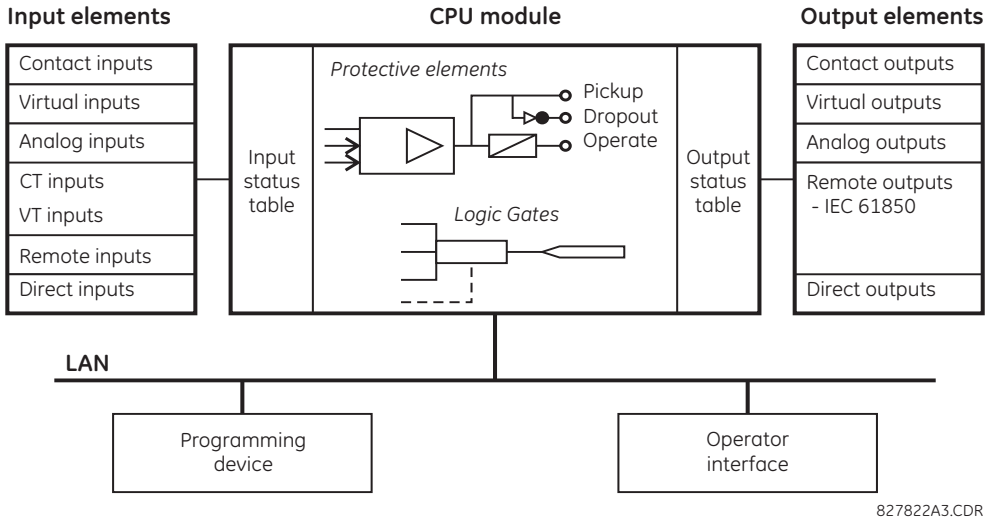

Figure 1–2: UR BLOCK DIAGRAM

The **CPU module** contains firmware that provides protection elements in the form of logic algorithms, as well as programmable logic gates, timers, and latches for control features.

Input elements accept a variety of analog or digital signals from the field. The UR isolates and converts these signals into logic signals used by the relay.

Output elements convert and isolate the logic signals generated by the relay into digital or analog signals that are used to control field devices.

The unit and software are backwards-compatible with UR devices.

b) UR SIGNAL TYPES

The **contact inputs and outputs** are digital signals associated with connections to hard-wired contacts. Both 'wet' and 'dry' contacts are supported.

The **virtual inputs and outputs** are digital signals associated with UR-series internal logic signals. Virtual inputs include signals generated by the local user interface. The virtual outputs are outputs of FlexLogic™ equations used to customize the device. Virtual outputs can also serve as virtual inputs to FlexLogic equations.

The **analog inputs and outputs** are signals that are associated with transducers, such as Resistance Temperature Detectors (RTDs).

The **CT and VT inputs** are analog current transformer and voltage transformer signals used to monitor AC power lines. The UR-series relays support 1 A and 5 A CTs.

The **remote inputs and outputs** provide a means of sharing digital point state information between remote UR-series devices. The remote outputs interface to the remote inputs of other UR-series devices. Remote outputs are FlexLogic operands inserted into IEC 61850 GSSE and GOOSE messages.

The **direct inputs and outputs** provide a means of sharing digital point states between a number of UR-series intelligent electronic devices (IEDs) over dedicated fiber, RS422, or G.703 interface. No switching equipment is required as the IEDs are connected directly in a ring or redundant (dual) ring configuration. This feature is optimized for speed and intended for pilot-aided schemes, distributed logic applications, or the extension of the input/output capabilities of a single relay chassis.

1.2.3 SOFTWARE ARCHITECTURE

Firmware is the software embedded in the relay in functional modules that can be installed in any relay as required. This is achieved with object-oriented design and programming (OOD/OOP) techniques.

Object-oriented techniques involve the use of *objects* and *classes*. An object is defined as "a logical entity that contains both data and code that manipulates data." A class is the generalized form of similar objects. By using this approach, one can create a protection class with the protection elements as objects of the class, such as time overcurrent, instantaneous overcurrent, current differential, undervoltage, overvoltage, underfrequency, and distance. These objects represent completely self-contained software modules. The same object-class concept can be used for metering, input/output control, software interface, communications, or any functional entity in the system.

Employing OOD/OOP in the software architecture of the G60 achieves the same features as the hardware architecture: modularity, scalability, and flexibility. The application software for any UR-series device (for example, feeder protection, transformer protection, distance protection) is constructed by combining objects from the various functional classes. This results in a common interface across the UR series.

1.3.1 SYSTEM REQUIREMENTS

The relay front panel or the EnerVista UR Setup software can be used to communicate with the relay. The software interface is the preferred method to edit settings and view actual values because the computer monitor can display more information.

The minimum system requirements for the EnerVista UR Setup software are as follows:

- Pentium 4 (Core Duo recommended)
- Windows XP with Service Pack 2 (Service Pack 3 recommended), Windows 7, or Windows Server 2008 Release 2 64-bit
- 1 GB of RAM (2 GB recommended)
- 500 MB free hard drive space (1 GB recommended)
- 1024 x 768 display (1280 x 800 recommended)
- Serial port
- Ethernet port of the same type as one of the UR CPU ports or a LAN connection to the UR
- Internet access or a DVD drive

The following qualified modems have been tested to be compatible with the G60 and the EnerVista UR Setup software:

- US Robotics external 56K FaxModem 5686
- US Robotics external Sportster 56K X2
- PCTEL 2304WT V.92 MDC internal modem

1.3.2 INSTALLATION

After ensuring that the requirements for using EnerVista UR Setup software are met, install the software from the GE EnerVista DVD. Or download the UR EnerVista software from http://www.gegridsolutions.com/multilin and install it.

To install the UR EnerVista software from the DVD:

1. Insert the GE EnerVista DVD into the DVD drive of your computer.
2. Click the **Install Now** button and follow the instructions.
3. When installation is complete, start the EnerVista Launchpad application.
4. Click the **IED Setup** section of the **Launch Pad** window.

Figure 1–3: ADDING A UR DEVICE IN LAUNCHPAD WINDOW

5. In the EnerVista Launch Pad window, click the **Add Product** button and select the appropriate product as follows. Select the **Web** option to ensure the most recent software release, or select **CD** if you do not have an Internet connec-

tion, then click the **Add Now** button to list software items for the product. EnerVista Launchpad obtains the software from the Internet or DVD and automatically starts the installation program.

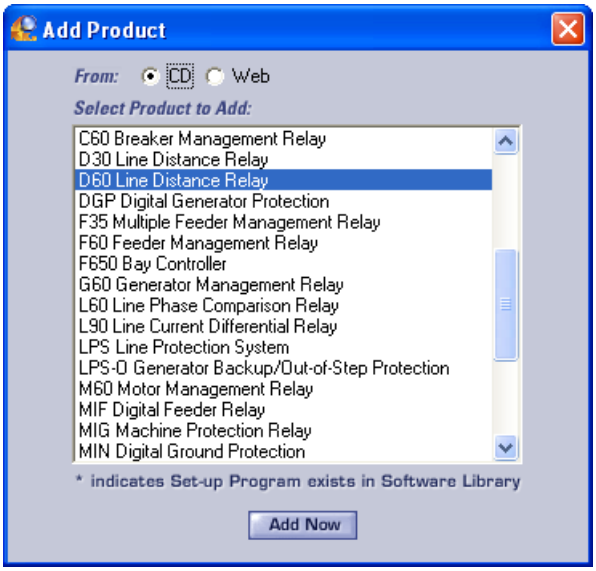

Figure 1–4: IDENTIFYING THE UR DEVICE TYPE

6. Select the complete path, including the new directory name, where the EnerVista UR Setup software is to be installed.
7. Click the **Next** button to begin the installation. The files are installed in the directory indicated, and the installation program automatically creates icons and adds an entry to the Windows start menu.
8. Click **Finish** to complete the installation. The UR device is added to the list of installed intelligent electronic devices (IEDs) in the EnerVista Launchpad window, as shown.

Figure 1–5: UR DEVICE ADDED TO LAUNCHPAD WINDOW

1.3.3 CONFIGURING THE G60 FOR SOFTWARE ACCESS

a) OVERVIEW

You connect remotely to the G60 through the rear RS485 or Ethernet port with a computer running the EnerVista UR Setup software. The G60 can also be accessed locally with a computer through the front panel RS232 port or the rear Ethernet port using the Quick Connect feature.

- To configure the G60 for remote access via the rear RS485 port, see the Configuring Serial Communications section.
- To configure the G60 for remote access via the rear Ethernet port, see the Configuring Ethernet Communications section.
- To configure the G60 for local access with a computer through either the front RS232 port or rear Ethernet port, see the Using the Quick Connect Feature section.

Implement IP addresses for the computer and a G60 device as follows.

The UR family supports the use of subnetworks as documented in RFC 950, which divides class-based networks into sub-networks (non-CIDR). The classes and IP address ranges are defined as follows.

Table 1–1: IP ADDRESS CLASSES

CLASSES	IP ADDRESS RANGE	DEFAULT SUBNET MASK ADDRESS	UR DEVICES
A	1.0.0.0 to 127.255.255.255	255.0.0.0	65,535 or more
B	128.0.0.0 to 191.255.255.255	255.255.0.0	255 to 65,534
C	192.0.0.0 to 223.255.255.255	255.255.255.0	0 to 254
D	224.0.0.0 to 239.255.255.255	(Reserved for multicasting)	
E	240.0.0.0 to 255.255.255.255	(Reserved)	

Both network and subnet addresses are contained within a range. The number of hosts determines the class and addresses as follows:

- Class A 255.0.0.0 — The first octet (255) specifies the network, the second to fourth octets (0) specify the subnet and host. Use this class when you have more than 65,535 hosts (UR devices).
- Class B 255.255.0.0 — The first two octets (255) specify the network, the third octet (0) specifies the subnet, and the fourth octet (0) specifies the host. Use this class when you have 255 to 65,534 hosts (UR devices).
- Class C 255.255.255.0 — The first three octets (255) specify the network and the last octet (0) specifies the subnet and host. Use this class when you have up to 254 hosts (UR devices).

An example of implementation is one computer and one UR device. Because there is one UR device, class C addressing is required. So we use UR 192.167.2.x with subnet mask 255.255.255.0 and computer 192.167.3.x with subnet mask 255.255.255.0.

For older, non-CIDR routing protocols, such as RIP version 1, follow these restrictions:

- Identical subnet masks — Use a single mask for all subnets within a network
- Contiguous subnets — The subnets must be contiguous and not split among networks. The subnets cannot pass traffic through other networks.

b) CONFIGURING SERIAL COMMUNICATIONS

A computer with an RS232 port and a serial cable is required. To use the RS485 port at the back of the relay, a GE Multilin F485 converter (or compatible RS232-to-RS485 converter) is required. See the F485 instruction manual for details.

1. Connect the computer to the F485 and the F485 to the RS485 terminal on the back of the UR device, or connect the computer to the RS232 port on the front of the relay.
2. In the EnerVista Launchpad software on the computer, select the UR device to start the software.
3. Click the **Device Setup** button to open the Device Setup window, and click the **Add Site** button to define a new site.
4. Enter a site name in the **Site Name** field. Optionally add a short description of the site along with the display order of devices defined for the site. This example uses “Location 1” as the site name. When done, click the **OK** button. The new site appears in the upper-left list in the EnerVista UR Setup window.
5. Click the **Device Setup** button, then select the new site to re-open the Device Setup window.
6. Click the **Add Device** button to define the new device.
7. Enter a name in the "Device Name” field and a description (optional) of the site.

8. Select “Serial” from the **Interface** drop-down list. This displays a number of interface parameters that must be entered for serial communications.

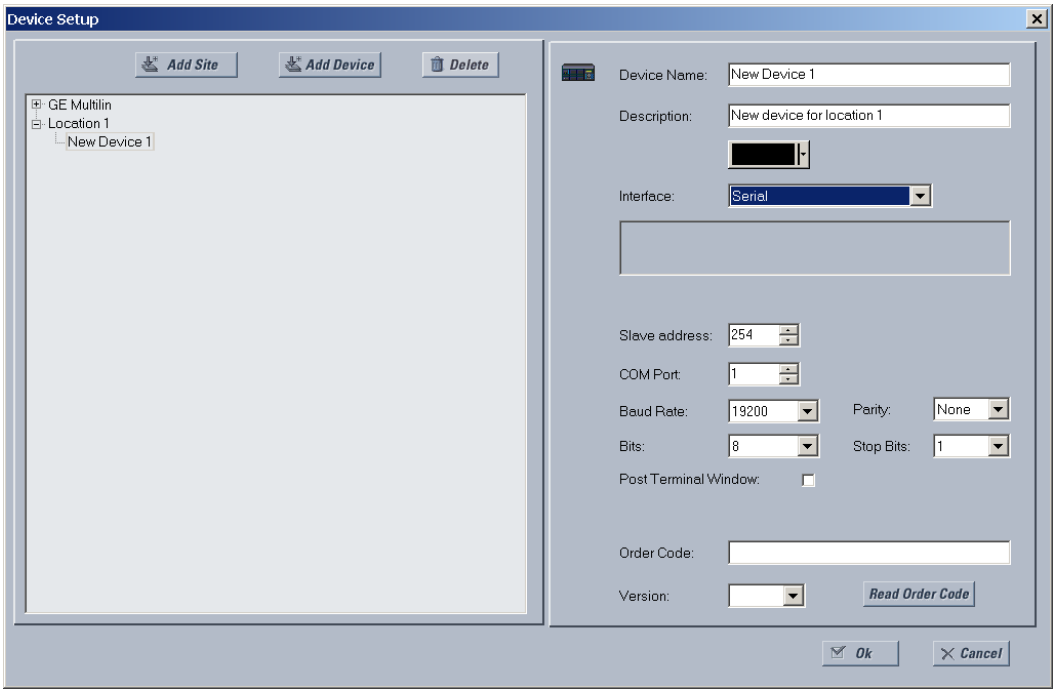

Figure 1–6: CONFIGURING SERIAL COMMUNICATIONS

9. Enter the COM port used by the computer, the baud rate, and parity settings from the front panel **SETTINGS** ⇨ **PRODUCT SETUP** ⇨⇩ **COMMUNICATIONS** ⇨ **SERIAL PORTS** menu, and the relay slave address setting from the front panel **SETTINGS** ⇨ **PRODUCT SETUP** ⇨⇩ **COMMUNICATIONS** ⇨⇩ **MODBUS PROTOCOL** ⇨ **MODBUS SLAVE ADDRESS** menu in their respective fields.
10. Click the **Read Order Code** button to connect to the G60 device and upload the order code. If a communications error occurs, ensure that the EnerVista UR Setup serial communications values entered in the previous step correspond to the relay setting values.
11. Click the **OK** button when the relay order code has been received. The new device is added to the Site List window (or Online window) located in the top left corner of the main EnerVista UR Setup window.

The device has now been configured for RS232 communications. Proceed to the Connecting to the G60 section to begin communication.

c) CONFIGURING ETHERNET COMMUNICATIONS

Before starting, verify that the Ethernet network cable is properly connected to the Ethernet port on the back of the relay. To setup the relay for Ethernet communications, you define a Site, then add the relay as a Device at that site.The computer and UR device must be on the same subnet.

12. Select the “UR” device from the EnerVista Launchpad to start EnerVista UR Setup.
13. Click the **Device Setup** button to open the Device Setup window, then click the **Add Site** button to define a new site.
14. Enter the desired site name in the “Site Name” field. If desired, a short description of site can also be entered along with the display order of devices defined for the site. In this example, we use “Location 2” as the site name. Click the **OK** button when complete.
15. The new site appears in the upper-left list in the EnerVista UR Setup window. Click the **Device Setup** button then select the new site to re-open the Device Setup window.
16. Click the **Add Device** button to define the new device.
17. Enter the desired name in the “Device Name” field and a description (optional) of the site.

18. Select “Ethernet” from the **Interface** drop-down list. This displays a number of interface parameters that must be entered for proper Ethernet functionality.

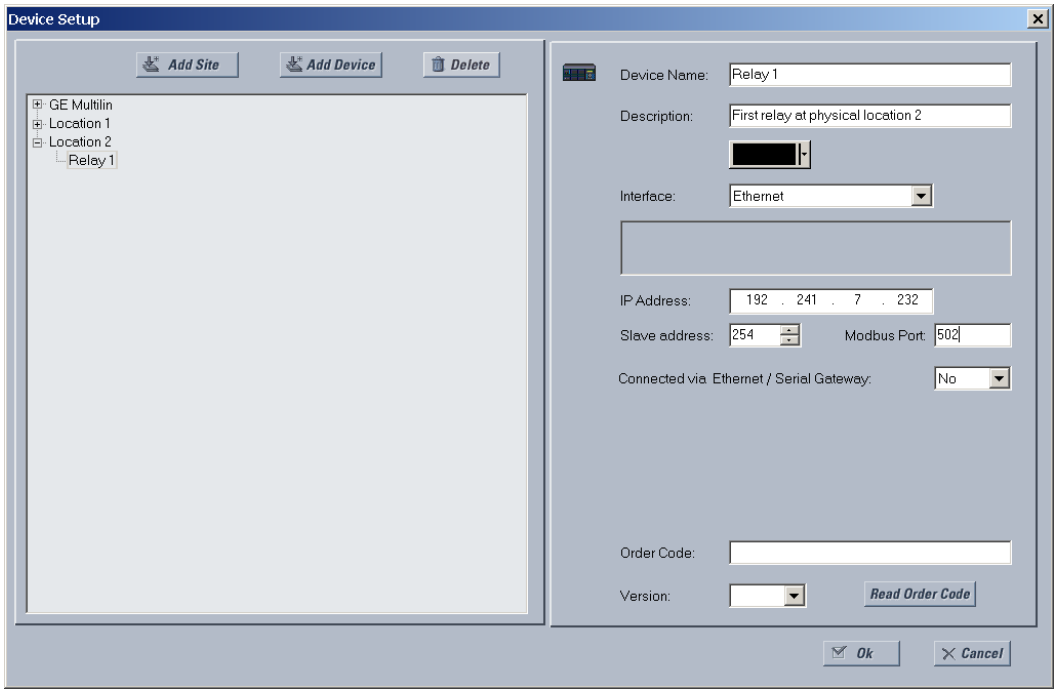

Figure 1–7: CONFIGURING ETHERNET COMMUNICATIONS

19. Enter the relay IP address specified in the front panel **SETTINGS** ⇨ **PRODUCT SETUP** ⇨⇩ **COMMUNICATIONS** ⇨⇩ **NETWORK** ⇨ **IP ADDRESS** in the “IP Address” field.
20. Enter the relay slave address and Modbus port address values from the respective settings in the front panel **SETTINGS** ⇨ **PRODUCT SETUP** ⇨⇩ **COMMUNICATIONS** ⇨⇩ **MODBUS PROTOCOL** menu.
21. Click the **Read Order Code** button to connect to the G60 device and upload the order code. If an communications error occurs, ensure that the three EnerVista UR Setup values entered in the previous steps correspond to the relay setting values.
22. Click **OK** when the relay order code has been received. The new device is added to the Site List window (or Online window) located in the top left corner of the main EnerVista UR Setup window.

The Site Device has now been configured for Ethernet communications. Proceed to the Connecting to the G60 section to begin communications.

1.3.4 USING THE QUICK CONNECT FEATURE

a) USING QUICK CONNECT VIA THE FRONT PANEL RS232 PORT

Before starting, verify that the serial cable is properly connected from the computer to the front panel RS232 port with a straight-through 9-pin to 9-pin RS232 cable.

1. Verify that the latest version of the EnerVista UR Setup software is installed (available from the GE EnerVista CD or online from http://www.gegridsolutions.com/multilin). See the Software Installation section if not already installed.
2. Select the “UR” device from the EnerVista Launchpad to start EnerVista UR Setup.

3. Click the **Quick Connect** button to open the Quick Connect dialog box.

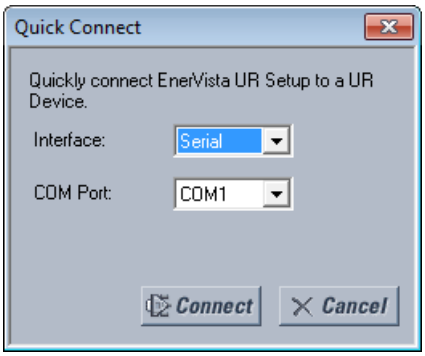

4. Select the **Serial** interface and the correct COM Port, then click **Connect**.
5. The EnerVista UR Setup software creates a site named "Quick Connect" with a corresponding device also named "Quick Connect" and displays them at the upper-left of the screen. Expand the sections to view data directly from the G60 device.

Each time that the EnerVista UR Setup software is initialized, click the **Quick Connect** button to establish direct communications to the G60 device. This ensures that configuration of the EnerVista UR Setup software matches the G60 model number.

b) USING QUICK CONNECT VIA THE REAR ETHERNET PORTS

To use the Quick Connect feature to access the G60 from a computer through Ethernet, first assign an IP address to the relay from the front panel keyboard.

1. Press the MENU key until the SETTINGS menu displays.
2. Navigate to the **SETTINGS** ⇨ **PRODUCT SETUP** ⇨⇩ **COMMUNICATIONS** ⇨⇩ **NETWORK** ⇨ **IP ADDRESS** setting.
3. Enter an IP address, for example "1.1.1.1," and select the ENTER key to save the value.
4. In the same menu, select the **SUBNET IP MASK** setting.
5. Enter a subnet IP address, for example "255.0.0.0," and press the ENTER key to save the value.

Next, use an Ethernet cross-over cable to connect the computer to the rear Ethernet port. In case you need it, the figure shows the pinout for an Ethernet cross-over cable.

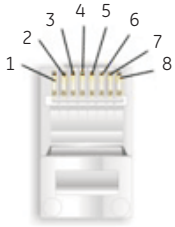

END 1		
Pin	Wire color	Diagram
1	White/orange	
2	Orange	
3	White/green	
4	Blue	
5	White/blue	
6	Green	
7	White/brown	
8	Brown	

END 2		
Pin	Wire color	Diagram
1	White/green	
2	Green	
3	White/orange	
4	Blue	
5	White/blue	
6	Orange	
7	White/brown	
8	Brown	

842799A1.CDR

Figure 1–8: ETHERNET CROSS-OVER CABLE PIN LAYOUT

Now, assign the computer an IP address compatible with the relay's IP address.

1. From the Windows desktop, right-click the **My Network Places** icon and select **Properties** to open the network connections window.

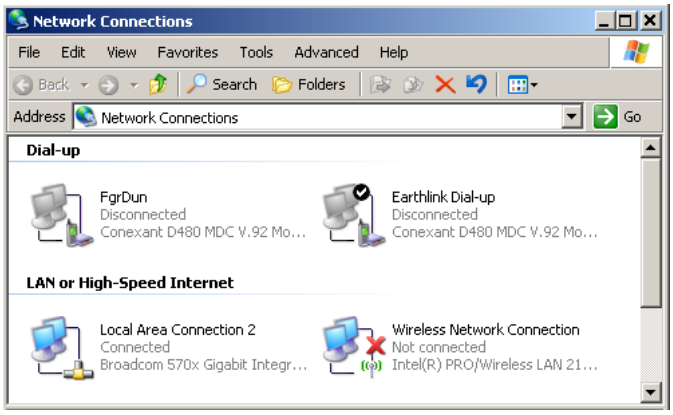

2. Right-click the **Local Area Connection** icon and select **Properties**.

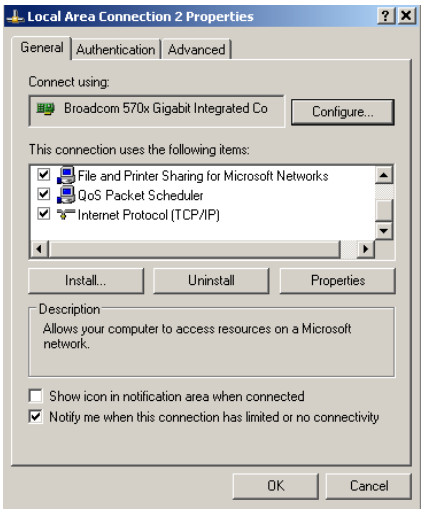

3. Select the **Internet Protocol (TCP/IP)** item from the list, and click the **Properties** button.

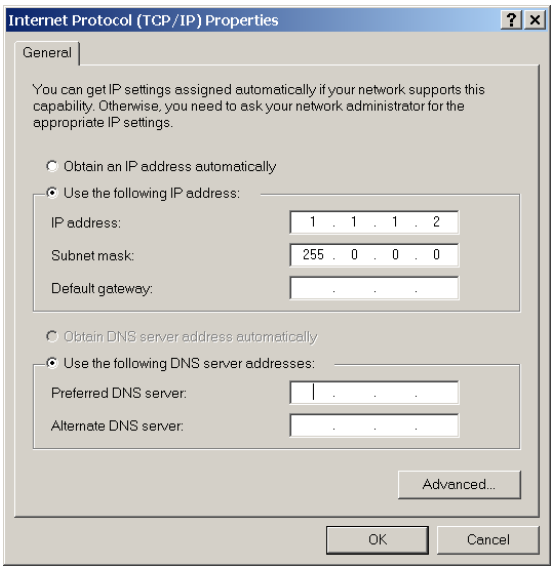

4. Click the “Use the following IP address” box.
5. Enter an **IP address** with the first three numbers the same as the IP address of the G60 relay and the last number different (in this example, 1.1.1.2).
6. Enter a subnet mask equal to the one set in the G60 (in this example, 255.0.0.0).
7. Click the **OK** button to save the values.

Before continuing, test the Ethernet connection.

1. Open a Windows console window by selecting **Start > Run** from the Windows **Start** menu and typing “cmd”.
2. Type the following command, substituting the IP address of 1.1.1.1 with yours:

```
C:\WINNT>ping 1.1.1.1
```

3. If the connection is successful, the system returns four replies similar to the following:

```
Pinging 1.1.1.1 with 32 bytes of data:

Reply from 1.1.1.1: bytes=32 time<10ms TTL=255
Reply from 1.1.1.1: bytes=32 time<10ms TTL=255
Reply from 1.1.1.1: bytes=32 time<10ms TTL=255
Reply from 1.1.1.1: bytes=32 time<10ms TTL=255

Ping statistics for 1.1.1.1:
    Packets: Sent = 4, Received = 4, Lost = 0 (0% loss),
Approximate round trip time in milliseconds:
    Minimum = 0ms, Maximum = 0ms, Average = 0 ms
```

4. Note that the values for `time` and `TTL` vary depending on local network configuration.
5. If the following sequence of messages appears when entering the `C:\WINNT>ping 1.1.1.1` command:

```
Pinging 1.1.1.1 with 32 bytes of data:

Request timed out.
Request timed out.
Request timed out.
Request timed out.

Ping statistics for 1.1.1.1:
    Packets: Sent = 4, Received = 0, Lost = 4 (100% loss),
Approximate round trip time in milliseconds:
    Minimum = 0ms, Maximum = 0ms, Average = 0 ms

Pinging 1.1.1.1 with 32 bytes of data:
```

verify the physical connection between the G60 and the computer, and double-check the programmed IP address in the **PRODUCT SETUP ⇨⇩ COMMUNICATIONS ⇨⇩ NETWORK ⇨ IP ADDRESS** setting, then repeat step 2.

6. If the following sequence of messages appears when entering the `C:\WINNT>ping 1.1.1.1` command:

```
Pinging 1.1.1.1 with 32 bytes of data:

Hardware error.
Hardware error.
Hardware error.
Hardware error.

Ping statistics for 1.1.1.1:
    Packets: Sent = 4, Received = 0, Lost = 4 (100% loss),
Approximate round trip time in milliseconds:
    Minimum = 0ms, Maximum = 0ms, Average = 0 ms

Pinging 1.1.1.1 with 32 bytes of data:
```

verify the physical connection between the G60 and the computer, and double-check the programmed IP address in the **PRODUCT SETUP ⇨⇩ COMMUNICATIONS ⇨⇩ NETWORK ⇨ IP ADDRESS** setting, then repeat step 2.

7. If the following sequence of messages appears when entering the `C:\WINNT>ping 1.1.1.1` command:

```
Pinging 1.1.1.1 with 32 bytes of data:

Destination host unreachable.
Destination host unreachable.
Destination host unreachable.
Destination host unreachable.

Ping statistics for 1.1.1.1:
    Packets: Sent = 4, Received = 0, Lost = 4 (100% loss),
Approximate round trip time in milliseconds:
    Minimum = 0ms, Maximum = 0ms, Average = 0 ms

Pinging 1.1.1.1 with 32 bytes of data:
```

verify the IP address is programmed in the local computer by entering the ipconfig command in the command window.

```
C:\WINNT>ipconfig

Windows IP Configuration

Ethernet adapter <F4FE223E-5EB6-4BFB-9E34-1BD7BE7F59FF>:

        Connection-specific DNS suffix. . :
        IP Address. . . . . . . . . . . . : 0.0.0.0
        Subnet Mask . . . . . . . . . . . : 0.0.0.0
        Default Gateway . . . . . . . . . :

Ethernet adapter Local Area Connection:

        Connection-specific DNS suffix  . :
        IP Address. . . . . . . . . . . . : 1.1.1.2
        Subnet Mask . . . . . . . . . . . : 255.0.0.0
        Default Gateway . . . . . . . . . :

C:\WINNT>
```

Before using the Quick Connect feature through the Ethernet port, disable any configured proxy settings in Internet Explorer.

1. Start the Internet Explorer software.
2. Select the **Tools > Internet Options** menu item and click the **Connections** tab.
3. Click on the **LAN Settings** button to open the following window.

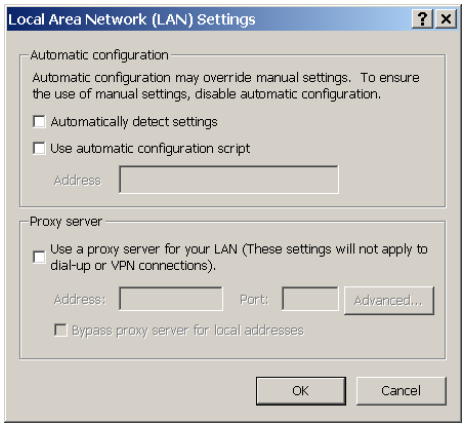

4. Ensure that the “Use a proxy server for your LAN” box is not checked.

If this computer is used to connect to the Internet, re-enable any proxy server settings after the computer has been disconnected from the G60 relay.

1. Start the Internet Explorer software.
2. Select the “UR” device from the EnerVista Launchpad to start EnerVista UR Setup.
3. Click the **Quick Connect** button to open the Quick Connect dialog box.

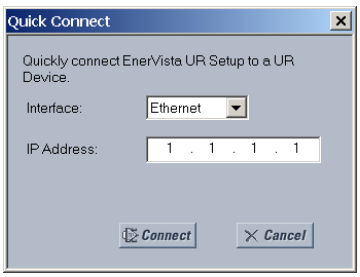

4. Select the **Ethernet** interface and enter the IP address assigned to the G60, then click the **Connect** button. The EnerVista UR Setup software creates a site named “Quick Connect” with a corresponding device also named “Quick Connect” and displays them at the upper-left of the screen.
5. Expand the sections to view data directly from the G60 device.

Each time the EnerVista UR Setup software is initialized, click the **Quick Connect** button to establish direct communications to the G60. This ensures that configuration of the EnerVista UR Setup software matches the G60 model number.

When direct communications with the G60 via Ethernet is complete, make the following changes:

1. From the Windows desktop, right-click the **My Network Places** icon and select **Properties** to open the network connections window.
2. Right-click the **Local Area Connection** icon and select the **Properties** item.
3. Select the **Internet Protocol (TCP/IP)** item from the list provided and click the **Properties** button.
4. Set the computer to “Obtain a relay address automatically” as shown.

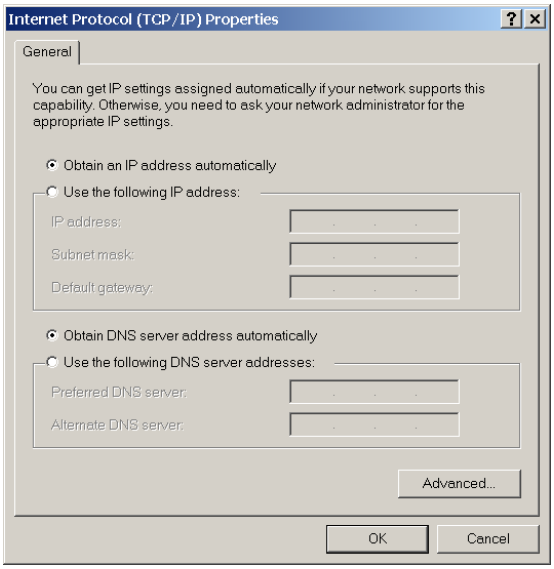

If this computer is used to connect to the Internet, re-enable any proxy server settings after the computer has been disconnected from the G60 relay.

AUTOMATIC DISCOVERY OF ETHERNET DEVICES

The EnerVista UR Setup software can automatically discover and communicate to all UR-series IEDs located on an Ethernet network.

Using the Quick Connect feature, a single click of the mouse triggers the software to automatically detect any UR-series relays located on the network. The EnerVista UR Setup software then proceeds to configure all settings and order code options in the **Device Setup** menu. This feature allows the user to identify and interrogate all UR-series devices at a location.

1.3.5 CONNECTING TO THE G60 RELAY

When unable to connect because of an "ACCESS VIOLATION," access **Device Setup** and refresh the order code for the device.

1. Open the Display Properties window through the Site List tree as shown. The Display Properties window opens with a status indicator on the lower left of the EnerVista UR Setup window.

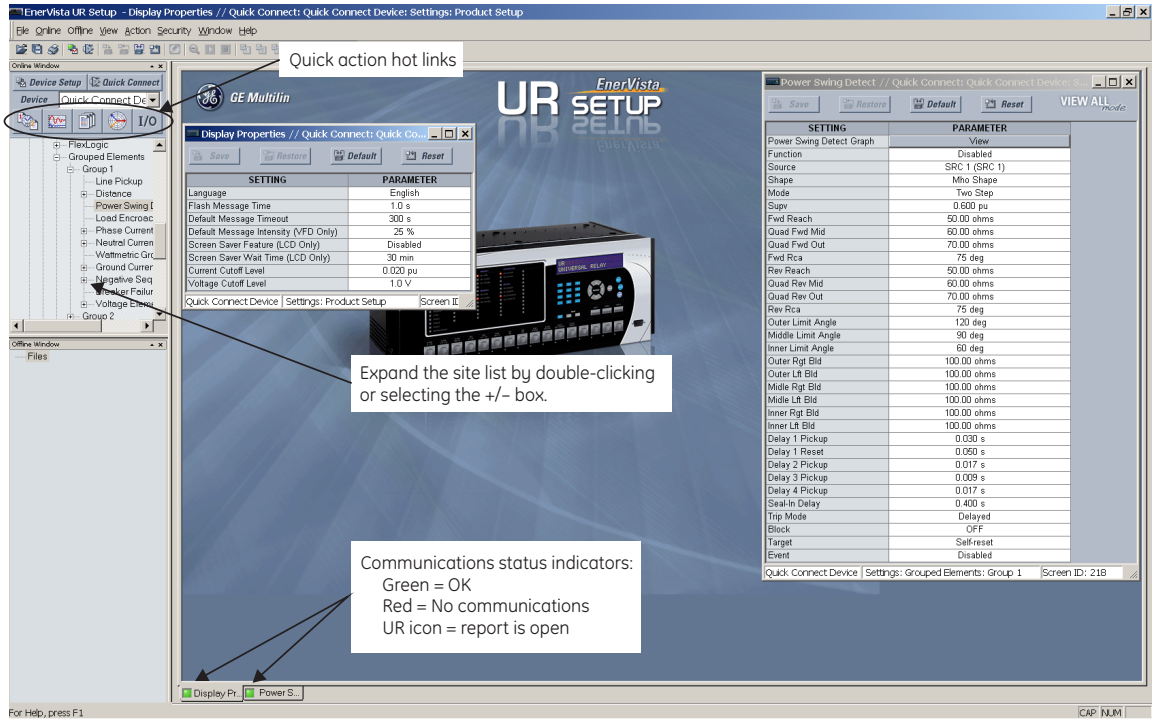

842743A3.CDR

2. If the status indicator is red, verify that the Ethernet network cable is properly connected to the Ethernet port on the back of the relay and that the relay has been properly setup for communications (steps A and B earlier).

   If a relay icon appears in place of the status indicator, than a report (such as an oscillography or event record) is open. Close the report to re-display the green status indicator.

3. The Display Properties settings can now be edited, printed, or changed.

NOTE

See chapter 4 in this manual or the EnerVista UR Setup Help File for information about the using the EnerVista UR Setup software interface.

QUICK ACTION HOT LINKS

The EnerVista UR Setup software has several quick action buttons to provide instant access to several functions that are often performed when using G60 relays. From the online window, users can select the relay to interrogate from a pull-down window, then click the button for the action they want to perform. The following quick action functions are available:

- View the G60 event record
- View the last recorded oscillography record
- View the status of all G60 inputs and outputs
- View all of the G60 metering values
- View the G60 protection summary
- Generate a service report

1.3.6 SETTING UP CYBERSENTRY AND CHANGING DEFAULT PASSWORD

If and when first using CyberSentry security, use the following procedure for set up.

1. Log in to the relay as Administrator by using the Value keys on the front panel or through EnerVista connected serially (so that no IP address is required). If logging in through EnerVista choose Device authentication. Enter the default password "ChangeMe1#". Note that the "Lock relay" setting needs to be disabled in the **Security > Supervisory** menu. When this setting is disabled, configuration and firmware upgrade are possible. By default, this setting is disabled.
2. Enable the Supervisor role if you have a need for it.
3. Make any required changes in configuration, such as setting a valid IP address for communication over Ethernet.
4. Log out of the Administrator account by choosing None.

Next, device or server authentication can be chosen on the login screen, but the choice is available only in EnerVista. Use device authentication to log in using the five pre-configured roles (Administrator, Supervisor, Engineer, Operator, Observer, or Administrator and Supervisor when device authentication is disabled). When using a serial connection, only device authentication is supported. When server authentication is required, characteristics for communication with a RADIUS server must be configured on the UR. This is possible only through the EnerVista software. The RADIUS server itself also must be configured. The appendix called RADIUS Server gives an example of how to setup a simple RADIUS server. Once both the RADIUS server and the parameters for connecting UR to the server have been configured, you can choose server authentication on the login screen of EnerVista.

Figure 1–9: LOGIN SCREEN FOR CYBERSENTRY

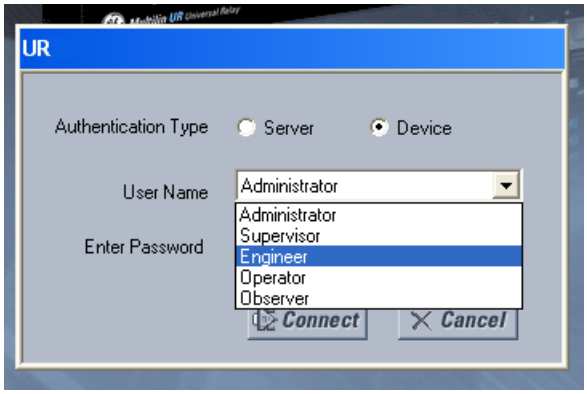

During the commissioning phase, you have the option to bypass the use of passwords. Do so by enabling the **BYPASS ACCESS** setting under **SETTINGS > PRODUCT SETUP > SECURITY > SUPERVISORY**. Be sure to disable this bypass setting after commissioning the device.

You can change the password for any role either from the front panel or through EnerVista.

If using EnerVista, navigate to **Settings > Product Setup > Security**. Change the **Local Administrator Password**, for example. It is strongly recommended that the password for the Administrator be changed from the default. Changing the passwords for the other three roles is optional.

1.4.1 MOUNTING AND WIRING

See Chapter 3: Hardware for mounting and wiring instructions.

1.4.2 COMMUNICATIONS

The EnerVista UR Setup software communicates to the relay via the faceplate RS232 port or the rear panel RS485 / Ethernet ports. To communicate via the faceplate RS232 port, a standard straight-through serial cable is used. The DB-9 male end is connected to the relay and the DB-9 or DB-25 female end is connected to the computer COM2 port as described in the CPU Communication Ports section of chapter 3.

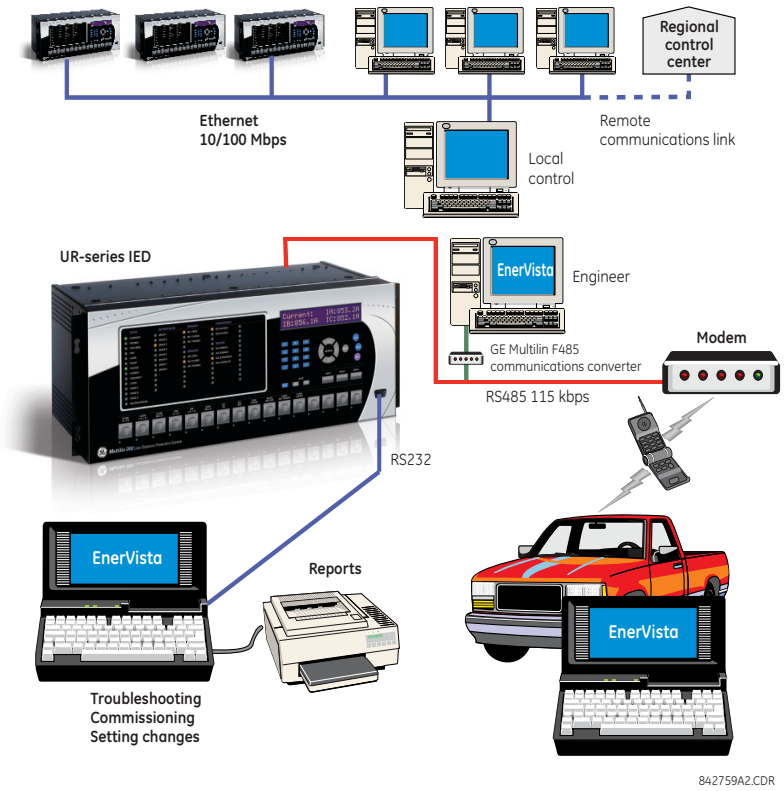

Figure 1–10: RELAY COMMUNICATION OPTIONS

To communicate through the G60 rear RS485 port from a computer RS232 port, the GE Multilin RS232/RS485 converter box is required. This device (catalog number F485) connects to the computer using a straight-through serial cable. A shielded twisted-pair (20, 22, or 24 AWG) connects the F485 converter to the G60 rear communications port. The converter terminals (+, –, GND) are connected to the G60 communication module (+, –, COM) terminals. See the CPU Communication Ports section in chapter 3 for details. The line is terminated with an R-C network (that is, 120 Ω, 1 nF) as described in the chapter 3.

1.4.3 FACEPLATE DISPLAY

All messages are displayed on a backlit liquid crystal display (LCD) to make them visible under poor lighting conditions. While the keypad and display are not actively being used, the display defaults to user-defined messages. Any high-priority event-driven message automatically overrides the default message and appears on the display.

Settings files conversion from previous firmware versions is supported.

1.5.1 FACEPLATE KEYPAD

Display messages are organized into pages under the following headings: actual values, settings, commands, and targets. The MENU key navigates through these pages. Each heading page is divided further into logical subgroups.

The MESSAGE keys navigate through the subgroups. The VALUE keys increment or decrement numerical setting values when in programming mode. These keys also scroll through alphanumeric values in the text edit mode. Alternatively, values can be entered with the numeric keypad.

The decimal key initiates and advances to the next character in text edit mode or enters a decimal point.

The HELP key can be pressed at any time for context-sensitive help messages.

The ENTER key stores altered setting values.

When entering an IP address on the front panel, key in the first sequence of the number, then press the • key for the decimal place. For example, for 127.0.0.1, press 127, then •, then 0, then •, then 0, then •, then 1. To save the address, press the ENTER key.

1.5.2 MENU NAVIGATION

Press the MENU key to select a header display page (top-level menu). The header title appears momentarily followed by a header display page menu item. Each press of the MENU key advances through the following main heading pages:

- Actual values
- Settings
- Commands
- Targets
- User displays (when enabled)

1.5.3 MENU HIERARCHY

The setting and actual value messages are arranged hierarchically. The header display pages are indicated by double scroll bar characters (■■), while sub-header pages are indicated by single scroll bar characters (■). The header display pages represent the highest level of the hierarchy and the sub-header display pages fall below this level. The MESSAGE UP and DOWN keys move within a group of headers, sub-headers, setting values, or actual values. Continually pressing the MESSAGE RIGHT key from a header display displays specific information for the header category. Conversely, continually pressing the MESSAGE LEFT key from a setting value or actual value display returns to the header display.

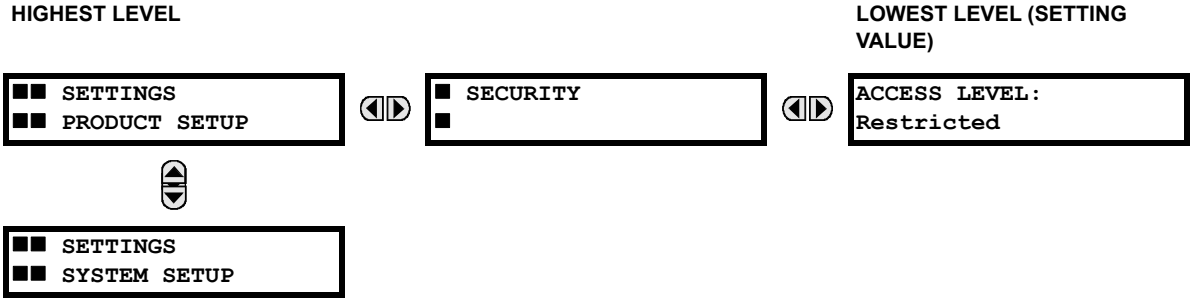

1.5.4 RELAY ACTIVATION

The relay is in the default “Not Programmed” state when it leaves the factory. When powered up successfully, the Trouble LED is on and the In Service LED off. The relay in the “Not Programmed” state blocks signaling of any output relay. These conditions remain until the relay is explicitly put in the “Programmed” state.

Select the menu message **SETTINGS ⇨ PRODUCT SETUP ⇨⇩ INSTALLATION ⇨ RELAY SETTINGS**

```
RELAY SETTINGS:
Not Programmed
```

1. To put the relay in the “Programmed” state, press either of the VALUE keys once and then press ENTER. The faceplate Trouble LED turns off and the In Service LED turns on.

The settings for the relay can be programmed manually (see Chapter 5) via the faceplate keypad or remotely via the EnerVista UR Setup software (see the EnerVista UR Setup help file).

1.5.5 RELAY PASSWORDS

a) PASSWORD SECURITY

It is recommended that passwords be set for each security level and assigned to specific personnel. There are two user security access levels, COMMAND and SETTING.

1. COMMAND

The COMMAND access level restricts the user from making any settings changes, but allows the user to perform the following operations:

- Change state of virtual inputs
- Clear event records
- Clear oscillography records
- Operate user-programmable pushbuttons

2. SETTING

The SETTING access level allows the user to make any changes to any of the setting values.

NOTE

See the Changing Settings section in Chapter 4 for complete instructions on setting security-level passwords.

b) CYBERSENTRY

When the CyberSentry option is purchased, advanced security services are available, using either device authentication or server authentication using RADIUS. When this option is purchased, the basic password security is disabled automatically. For more information, see the CyberSentry content in the *Security* section of the next chapter.

1.5.6 FLEXLOGIC CUSTOMIZATION

FlexLogic equation editing is required for setting user-defined logic for customizing the relay operations. See the FlexLogic section in Chapter 5.

The G60 requires minimal maintenance after it is commissioned into service. Since the G60 is a microprocessor-based relay, its characteristics do not change over time. As such, no further functional tests are required. Expected service life is 20 years for UR devices manufactured June 2014 or later when applied in a controlled indoors environment and electrical conditions within specification.

The G60 performs a number of continual self-tests and takes the necessary action in case of any major errors (see the Relay Self-Tests section in chapter 7). However, it is recommended that G60 maintenance be scheduled with other system maintenance. This maintenance can involve in-service, out-of-service, or unscheduled maintenance.

In-service maintenance:

1. Visual verification of the analog values integrity, such as voltage and current (in comparison to other devices on the corresponding system).
2. Visual verification of active alarms, relay display messages, and LED indications.
3. LED test.
4. Visual inspection for any damage, corrosion, dust, or loose wires.
5. Event recorder file download with further events analysis.

Out-of-service maintenance:

1. Check wiring connections for firmness.
2. Analog values (currents, voltages, RTDs, analog inputs) injection test and metering accuracy verification. Calibrated test equipment is required.
3. Protection elements setting verification (analog values injection or visual verification of setting file entries against relay settings schedule).
4. Contact inputs and outputs verification. This test can be conducted by direct change of state forcing or as part of the system functional testing.
5. Visual inspection for any damage, corrosion, or dust.
6. Event recorder file download with further events analysis.
7. LED Test and pushbutton continuity check.

Unscheduled maintenance, such as a disturbance causing system interruption:

1. View the event recorder and oscillography or fault report for correct operation of inputs, outputs, and elements.

If the relay or one of its modules is of concern, contact GE Multilin for service.

2.1.1 OVERVIEW

The G60 Generator Protection System is a microprocessor based relay that provides protection, monitoring, control, and recording functions for AC generators driven by steam, gas, or hydraulic turbine. Current, voltage and frequency protection are provided along with fault diagnostics. Breaker fail function is provided for up to four breakers.

Voltage, current, and power metering is built into the relay as a standard feature. Current parameters are available as total waveform RMS magnitude, or as fundamental frequency only RMS magnitude and angle (phasor).

Diagnostic features include an event recorder capable of storing 1024 time-tagged events, oscillography capable of storing up to 64 records with programmable trigger, content and sampling rate, and data logger acquisition of up to 16 channels, with programmable content and sampling rate. The internal clock used for time-tagging can be synchronized with an IRIG-B signal, using the Simple Network Time Protocol (SNTP) over the Ethernet port, or using the Precision Time Protocol (PTP). This precise time stamping allows the sequence of events to be determined throughout the system. Events can also be programmed (via FlexLogic™ equations) to trigger oscillography data capture which may be set to record the measured parameters before and after the event for viewing on a computer. These tools significantly reduce troubleshooting time and simplify report generation in the event of a system fault.

Several options are available for communication. A faceplate RS232 port can be used to connect to a computer for the programming of settings and the monitoring of actual values. The RS232 port has a fixed baud rate of 19.2 kbps. The rear RS485 port allows independent access by operating and engineering staff. It can be connected to system computers with baud rates up to 115.2 kbps. All serial ports use the Modbus RTU protocol. The IEC 60870-5-103 protocol is supported on the RS485 interface. IEC 60870-5-103, DNP, and Modbus cannot be enabled simultaneously on this interface. Also only one of the DNP, IEC 60870-5-103, and IEC 60870-5-104 protocols can be enabled at any time on the relay. When the IEC 60870-5-103 protocol is chosen, the RS485 port has a fixed even parity and the baud rate can be either 9.6 kbps or 19.2 kbps. The 100Base-FX or 100Base-T Ethernet interface provides fast, reliable communications in noisy environments. The Ethernet port supports IEC 61850, IEC 61850-90-5, Modbus/TCP, and TFTP protocols, PTP (according to IEEE Std. 1588-2008 or IEC 61588), and allows access to the relay via any standard web browser (G60 web pages). The IEC 60870-5-104 protocol is supported on the Ethernet port. The Ethernet port also supports the Parallel Redundancy Protocol (PRP) of IEC 62439-3 (clause 4, 2012) when purchased as an option.

Settings and actual values can be accessed from the front panel or EnerVista software.

The G60 IEDs use flash memory technology which allows field upgrading as new features are added. The following single line diagram illustrates the relay functionality using ANSI (American National Standards Institute) device numbers.

Table 2–1: ANSI DEVICE NUMBERS AND FUNCTIONS

DEVICE NUMBER	FUNCTION
21P	Phase distance backup
24	Volts per hertz
25	Synchrocheck
27P	Phase undervoltage
27TN	Third harmonic neutral undervoltage
27X	Auxiliary undervoltage
32	Sensitive directional power
40	Loss of excitation
46	Generator unbalance
49	Thermal overload protection (RTD)
50BF	Breaker failure
50G	Ground instantaneous overcurrent
50N	Neutral instantaneous overcurrent
50P	Phase instantaneous overcurrent
50SP	Split phase protection
50/27	Accidental energization
51G	Ground time overcurrent

DEVICE NUMBER	FUNCTION
51N	Neutral time overcurrent
59N	Neutral overvoltage
59P	Phase overvoltage
59X	Auxiliary overvoltage
59_2	Negative-sequence overvoltage
64F	Field ground protection
64S	Sub-harmonic stator ground protection
64TN	100% stator ground
67_2	Negative-sequence directional overcurrent
67N	Neutral directional overcurrent
67P	Phase directional overcurrent
68	Power swing blocking
78	Out-of-step protection
81O	Overfrequency
81R	Rate of change of frequency
81U	Underfrequency
87RGF	Restricted ground fault

Table 2–1: ANSI DEVICE NUMBERS AND FUNCTIONS

DEVICE NUMBER	FUNCTION
51PV	Phase time overcurrent with voltage restraint

DEVICE NUMBER	FUNCTION
87S	Stator differential

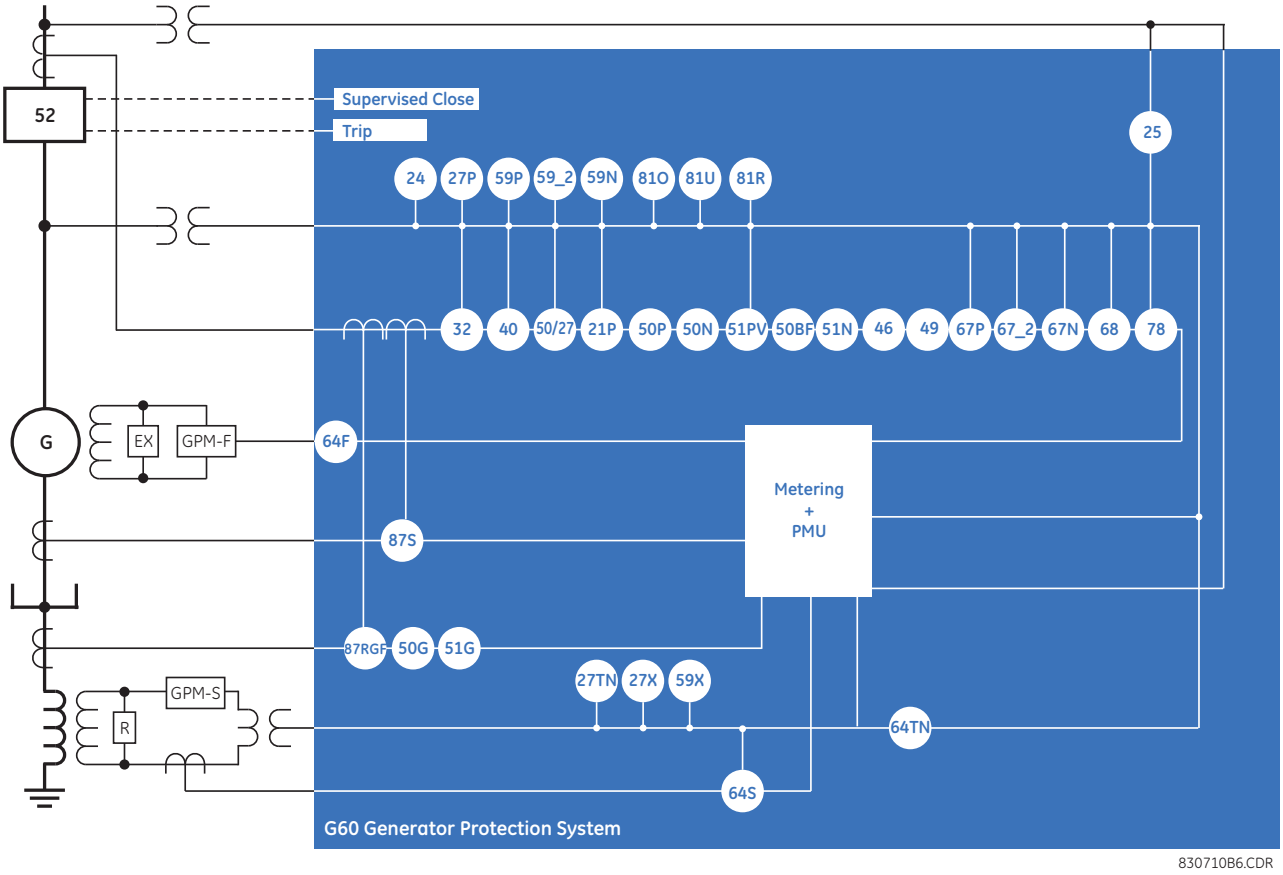

Figure 2–1: SINGLE LINE DIAGRAM

Table 2–2: OTHER DEVICE FUNCTIONS

FUNCTION	FUNCTION	FUNCTION
Breaker control	FlexLogic equations	Time synchronization over IRIG-B or IEEE 1588
Breaker flashover	FlexElements™ (16)	Time synchronization over SNTP
Contact inputs (up to 96)	IEC 60870-5-103 communications (optional)	Transducer inputs and outputs
Contact outputs (up to 64)	IEC 61850 communications (optional)	Trip output
Control pushbuttons	Metering: current, voltage, power, frequency	User-definable displays
CT failure detector	Oscillography	User-programmable fault reports

Table 2–2: OTHER DEVICE FUNCTIONS

FUNCTION	FUNCTION	FUNCTION
CyberSentry™ security	Modbus communications	User-programmable LEDs
Data logger	Modbus user map	User-programmable pushbuttons
Digital counters (8)	Non-volatile latches	User-programmable self-tests
Digital elements (48)	Non-volatile selector switch	Virtual inputs (64)
Direct inputs and outputs (32)	RTD protection	Virtual outputs (96)
Disconnect switches	Remote RTD protection	VT fuse failure
DNP 3.0 or IEC 60870-5-104 protocol	Setting groups (6)	
Ethernet Global Data protocol (optional)	Stator differential	
Event recorder	Synchrophasor (PMU)	

2.1.2 SECURITY

The following security features are available:

- Password security — Basic security present in the default offering of the product
- EnerVista security — Role-based access to various EnerVista software screens and configuration elements. The feature is available in the default offering of the product and only in the EnerVista software.
- CyberSentry security — Advanced security options available as a software option. When purchased, the options are automatically enabled, and the default Password security and EnerVista security are disabled.

Changing the password, or any other setting, does not take the relay out of service. The relay is taken out of service when a settings file is written to it.

a) ENERVISTA SECURITY

The EnerVista security management system is a role-based access control (RBAC) system that allows an administrator to manage the privileges of multiple users. This allows for access control of UR devices by multiple personnel within a substation and conforms to the principles of RBAC as defined in ANSI INCITS 359-2004. The EnerVista security management system is disabled by default to allow the administrator direct access to the EnerVista software after installation. It is recommended that security be enabled before placing the device in service.

Basic password or enhanced CyberSentry security applies, depending on purchase.

b) PASSWORD SECURITY

Password security is a basic security feature present in the default offering of the product.

Two levels of password security are provided: command and setting.

The following operations are under command password supervision:

- Changing the state of virtual inputs
- Clearing the event records
- Clearing the oscillography records
- Changing the date and time
- Clearing energy records
- Clearing the data logger
- Clearing the user-programmable pushbutton states

The following operations are under setting password supervision:

- Changing any setting
- Test mode operation

The G60 supports password entry from a local or remote connection. Local access is defined as any access to settings or commands via the faceplate interface. This includes both keypad entry and the through the faceplate RS232 port. Remote access is defined as any access to settings or commands via any rear communications port. This includes both Ethernet and RS485 connections. Any changes to the local or remote passwords enables this functionality.

When entering a settings or command password via EnerVista or any serial interface, the user must enter the corresponding connection password. If the connection is to the back of the G60, the remote password must be used. If the connection is to the RS232 port of the faceplate, the local password applies.

Password access events are logged in the Event Recorder.

c) CYBERSENTRY SECURITY

CyberSentry Embedded Security is a software option that provides advanced security services. When this option is purchased, the basic password security is disabled automatically.

CyberSentry provides security through the following features:

- An Authentication, Authorization, Accounting (AAA) Remote Authentication Dial-In User Service (RADIUS) client that is centrally managed, enables user attribution, provides accounting of all user activities, and uses secure standards-based strong cryptography for authentication and credential protection.
- A Role-Based Access Control (RBAC) system that provides a permission model that allows access to UR device operations and configurations based on specific roles and individual user accounts configured on the AAA server (that is, Administrator, Supervisor, Engineer, Operator, Observer).
- Security event reporting through the Syslog protocol for supporting Security Information Event Management (SIEM) systems for centralized cybersecurity monitoring.
- Strong encryption of all access and configuration network messages between the EnerVista software and UR devices using the Secure Shell (SSH) protocol, the Advanced Encryption Standard (AES), and 128-bit keys in Galois Counter Mode (GCM) as specified in the U.S. National Security Agency Suite B extension for SSH and approved by the National Institute of Standards and Technology (NIST) FIPS-140-2 standards for cryptographic systems.

CYBERSENTRY USER ROLES

CyberSentry user roles (Administrator, Engineer, Operator, Supervisor, Observer) limit the levels of access to various UR device functions. This means that the EnerVista software allows for access to functionality based on the user's logged in role.

Example: Administrative functions can be segmented away from common operator functions, or engineering type access, all of which are defined by separate roles, as shown in the following figure, so that access of UR devices by multiple personnel within a substation is allowed.

Figure 2–2: CYBERSENTRY USER ROLES

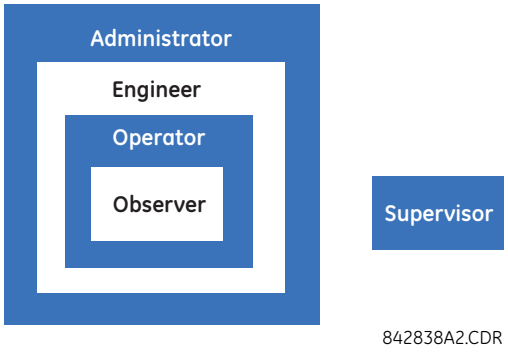

The table lists the roles that are supported and their corresponding capabilities.

Table 2–3: PERMISSIONS BY USER ROLE FOR CYBERSENTRY

Roles	Administrator	Engineer	Operator	Supervisor	Observer
	Complete access	Complete access except for CyberSentry Security	Command menu	Authorizes writing	Default role
Device Definition	R	R	R	R	R
Settings					
|---------- **Product Setup**					
|---------- Security (CyberSentry)	RW	R	R	R	R
|---------- Supervisory	see table notes	R	R	see table notes	R
|---------- Display Properties	RW	RW	R	R	R
|---------- Clear relay records (settings)	RW	RW	R	R	R
|---------- Communications	RW	RW	R	R	R
|---------- Modbus user map	RW	RW	R	R	R
|---------- Real Time Clock	RW	RW	R	R	R
|---------- Oscillography	RW	RW	R	R	R
|---------- Data Logger	RW	RW	R	R	R
|---------- Demand	RW	RW	R	R	R
|---------- User Programmable LEDs	RW	RW	R	R	R
|---------- User Programmable self test	RW	RW	R	R	R
|---------- Control Pushbuttons	RW	RW	R	R	R
|---------- User programmable Pushbuttons	RW	RW	R	R	R
|---------- Flex states	RW	RW	R	R	R
|---------- User definable displays	RW	RW	R	R	R
|---------- Direct I/O	RW	RW	R	R	R
|---------- Tele-protection	RW	RW	R	R	R
|---------- Installation	RW	RW	R	R	R
|---------- **System Setup**	RW	RW	R	R	R
|---------- **FlexLogic**	RW	RW	R	R	R
|---------- **Grouped Elements**	RW	RW	R	R	R
|---------- **Control Elements**	RW	RW	R	R	R
|---------- **Inputs / Outputs**	RW	RW	R	R	R
|---------- Contact Input	RW	RW	R	R	R
|---------- Contact Input threshold	RW	RW	R	R	R
|---------- Virtual Inputs	RW	RW	R	R	R
|---------- Contact Output	RW	RW	R	R	R
|---------- Virtual Output	RW	RW	R	R	R
|---------- Remote Devices	RW	RW	R	R	R
|---------- Remote Inputs	RW	RW	R	R	R
|---------- Remote DPS input	RW	RW	R	R	R
|---------- Remote Output DNA Bit Pair	RW	RW	R	R	R
|---------- Remote Output user Bit Pair	RW	RW	R	R	R
|---------- Resetting	RW	RW	R	R	R

Roles	Administrator	Engineer	Operator	Supervisor	Observer
|---------- Direct Inputs	RW	RW	R	R	R
|---------- Direct Outputs	RW	RW	R	R	R
|---------- Teleprotection	RW	RW	R	R	R
|---------- Direct Analogs	RW	RW	R	R	R
|---------- Direct Integers	RW	RW	R	R	R
|---------- IEC61850 GOOSE Analogs	RW	RW	R	R	R
|---------- IEC61850 GOOSE Integers	RW	RW	R	R	R
|---------- **Transducer I/O**	RW	RW	R	R	R
|---------- **Testing**	RW	RW	R	R	R
|---------- **Front Panel Labels Designer**	NA	NA	NA	NA	NA
|---------- **Protection Summary**	NA	NA	NA	NA	NA
Commands	RW	RW	RW	R	R
|---------- **Virtual Inputs**	RW	RW	RW	R	R
|---------- **Clear Records**	RW	RW	RW	R	R
|---------- **Set date and time**	RW	RW	RW	R	R
User Displays	R	R	R	R	R
Targets	R	R	R	R	R
Actual Values	R	R	R	R	R
|---------- Front Panel Labels Designer	R	R	R	R	R
|---------- Status	R	R	R	R	R
|---------- Metereing	R	R	R	R	R
|---------- Transducer I/O	R	R	R	R	R
|---------- Records	R	R	R	R	R
|---------- Product Info	R	R	R	R	R
Maintenance	RW	RW	R	R	R
|---------- Modbus Analyzer	NA	NA	NA	NA	NA
|---------- Change Front Panel	RW	RW	RW	R	R
|---------- Update Firmware	Yes	No	No	No	No
|---------- Retrieve File	Yes	No	No	No	No

Table Notes:

1. RW = read and write access
2. R = read access
3. Supervisor = RW (default), Administrator = R (default), Administrator = RW (only if Supervisor role is disabled)
4. NA = the permission is not enforced by CyberSentry Security

CYBERSENTRY USER AUTHENTICATION

There are two types of authentication supported by CyberSentry that can be used to access the UR device:

- Device Authentication (local UR device authenticates)
- Server Authentication (RADIUS server authenticates)

The EnerVista software allows access to functionality that is determined by the user role, which comes either from the local UR device or RADIUS server.

The EnerVista software has a device authentication option on the login screen for accessing the UR device. When the "Device" button is selected, the UR uses its local authentication database and not the RADIUS server to authenticate the user. In this case, it uses its built-in roles (Administrator, Engineer, Supervisor, Observer, Operator, or Administrator and Supervisor when Device Authentication is disabled) as login names and the associated passwords are stored on the UR device. As such, when using the local accounts, access is not user-attributable.

In cases where user attributable access is required especially to facilitate auditable processes for compliance reasons, use RADIUS authentication only.

When the "Server" Authentication Type option is selected, the UR uses the RADIUS server and not its local authentication database to authenticate the user.

No password or security information are displayed in plain text by the EnerVista software or UR device, nor are they ever transmitted without cryptographic protection.

CyberSentry Server Authentication

The UR has been designed to automatically direct authentication requests based on user names. In this respect, local account names on the UR are considered as reserved, and not used on a RADIUS server.

The UR automatically detects whether an authentication request is to be handled remotely or locally. As there are only five local accounts possible on the UR, if the user ID credential does not match one of the five local accounts, the UR automatically forwards the request to a RADIUS server when one is provided.

If a RADIUS server is provided, but is unreachable over the network, server authentication requests are denied. In this situation, use local UR accounts to gain access to the UR system.

2.1.3 IEC 870-5-103 PROTOCOL

IEC 870-5-103 is a companion standard to IEC 870-5 suit of standards for transmission protocols. It defines messages and procedures for interoperability between protection equipment and devices of a control system in a substation for communicating on a serial line.

The IEC 60870-5-103 is an unbalanced (master-slave) protocol for coded-bit serial communication, exchanging information with a control system. In the context of this protocol, the protection equipment is the slave and the control system is the master. The communication is based on a point to point principle. The master must be able to interpret the IEC 60870-5-103 communication messages.

The UR implementation of IEC 60870-5-103 consists of the following functions:

- Report binary inputs
- Report analog values (measurands)
- Commands
- Time synchronization

The RS485 port supports IEC 60870-5-103.

2.2.1 OVERVIEW

The G60 is available as a 19-inch rack horizontal mount or reduced-size (¾) vertical unit and consists of the following modules: power supply, CPU, CT/VT, contact input and output, transducer input and output, and inter-relay communications. Each of these modules can be supplied in a number of configurations specified at the time of ordering. The information required to completely specify the relay is provided in the following tables (see chapter 3 for full details of relay modules).

2

NOTE

Order codes are subject to change without notice. See the ordering page at http://www.gegridsolutions.com/multilin/order.htm for the latest options.

The order code structure is dependent on the mounting option (horizontal or vertical) and the type of CT/VT modules (enhanced diagnostic CT/VT modules or HardFiber^{TM} process bus modules). The order code options are described in the following sub-sections.

2.2.2 ORDER CODES WITH ENHANCED CT/VT MODULES

The order codes for the horizontal mount units are shown below.

Table 2–4: G60 ORDER CODES (HORIZONTAL UNITS)

	G60 -	*	** -	*	*	* - F	** - H	** - M	** - P	** - U	** - W/X	**	Full Size Horizontal Mount
BASE UNIT	G60												Base Unit
CPU		T											RS485 and Three Multi-mode fiber 100Base-FX (SFP with LC)
		U											RS485 and Two Multi-mode fiber 100Base-FX (SFP with LC), One 10/100Base-T (SFP with RJ45)
		V											RS485 and Three 10/100Base-T (SFP with RJ45)
SOFTWARE			00										No Software Options
			01										Ethernet Global Data (EGD)
			03										IEC 61850
			04										Ethernet Global Data (EGD) and IEC 61850
			06										Phasor measurement unit (PMU)
			07										IEC 61850 and phasor measurement unit (PMU)
			A0										CyberSentry Lvl 1
			A1										CyberSentry Lvl 1 and Ethernet Global Data (EGD)
			A3										CyberSentry Lvl 1 and IEC 61850
			A4										CyberSentry Lvl 1 and IEC 61850 and Ethernet Global Data (EGD)
			A6										CyberSentry Lvl 1 and phasor measurement unit (PMU)
			A7										CyberSentry Lvl 1 and IEC 61850 and phasor measurement unit (PMU)
			B0										IEEE 1588
			B1										IEEE 1588 and Ethernet Global Data (EGD)
			B3										IEEE 1588 and IEC 61850
			B4										IEEE 1588 and IEC 61850 and Ethernet Global Data (EGD)
			B6										IEEE 1588 and phasor measurement unit (PMU)
			B7										IEEE 1588 and IEC 61850 and phasor measurement unit (PMU)
			C0										Parallel Redundancy Protocol (PRP)
			C1										PRP and Ethernet Global Data
			C3										PRP and IEC 61850
			C4										PRP, Ethernet Global Data, and IEC 61850
			C6										PRP and PMU
			C7										PRP, IEC 61850, and PMU
			D0										IEEE 1588 and CyberSentry Lvl 1
			D1										IEEE 1588 and CyberSentry Lvl 1 and Ethernet Global Data (EGD)
			D3										IEEE 1588 and CyberSentry Lvl 1 and IEC 61850
			D4										IEEE 1588 and CyberSentry Lvl 1 and IEC 61850 and Ethernet Global Data (EGD)
			D6										IEEE 1588 and CyberSentry Lvl 1 and phasor measurement unit (PMU)
			D7										IEEE 1588 and CyberSentry Lvl 1 and IEC 61850 and phasor measurement unit (PMU)
			E0										IEEE 1588 and PRP
			E1										IEEE 1588, PRP, and Ethernet Global Dada
			E3										IEEE 1588, PRP, and IEC 61850
			E4										IEEE 1588, PRP, Ethernet Global Data, and IEC 61850
			E6										IEEE 1588, PRP, and PMU
			E7										IEEE 1588, PRP, IEC 61850, and PMU
			F0										PRP and CyberSentry Lvl1
			F1										PRP, CyberSentry Lvl1, and Ethernet Global Data
			F3										PRP, CyberSentry Lvl 1, and IEC 61850
			F4										PRP, CyberSentry Lvl 1, Ethernet Global Data, and IEC 61850
			F6										PRP, CyberSentry Lvl 1, and PMU
			F7										PRP, CyberSentry Lvl 1, IEC 61850, and PMU
			G0										IEEE 1588, PRP, and CyberSentry Lvl 1
			G1										IEEE 1588, PRP, CyberSentry Lvl 1, Ethernet Global Data
			G3										IEEE 1588, PRP, CyberSentry Lvl 1, and IEC 61850
			G4										IEEE 1588, PRP, CyberSentry Lvl 1, Ethernet Global Data, and IEC 61850
			G6										IEEE 1588, PRP, CyberSentry Lvl 1, and PMU
			G7										IEEE 1588, PRP, CyberSentry Lvl 1, IEC 61850, and PMU
			J0										IEC 60870-5-103
			J1										IEC 60870-5-103 + EGD
			J3										IEC 60870-5-103 + IEC 61850
			J4										IEC 60870-5-103 + EGD + IEC 61850
			J6										IEC 60870-5-103 + PMU
			J7										IEC 60870-5-103 + IEC 61850 + PMU
			K0										IEEE1588 + PRP + IEC 60870-5-103
			K1										IEEE1588 + PRP + IEC 60870-5-103 + EGD
			K3										IEEE1588 + PRP + IEC 60870-5-103 + IEC 61850
			K4										IEEE1588 + PRP + IEC 60870-5-103 + EGD + IEC 61850
			K6										IEEE1588 + PRP + IEC 60870-5-103 + PMU
			K7										IEEE1588 + PRP + IEC 60870-5-103 + IEC 61850 + PMU
			L0										IEC 60870-5-103 + IEEE1588 + PRP + CyberSentry Lvl 1
			L1										IEC 60870-5-103 + IEEE1588 + PRP + CyberSentry Lvl 1 + EGD
			L3										IEC 60870-5-103 + IEEE1588 + PRP + CyberSentry Lvl 1 + IEC 61850
			L4										IEC 60870-5-103 + IEEE1588 + PRP + CyberSentry Lvl 1 + EGD + IEC 61850
			L6										IEC 60870-5-103 + IEEE1588 + PRP + CyberSentry Lvl 1 + PMU
			L7										IEC 60870-5-103 + IEEE1588 + PRP + CyberSentry Lvl 1 + IEC 61850 + PMU

Table 2–4: G60 ORDER CODES (HORIZONTAL UNITS)

G60 - * ** - * * * - F ** - H ** - M ** - P ** - U ** - W/X **	
	Full Size Horizontal Mount
MOUNT/COATING H	Horizontal (19" rack)
A	Horizontal (19" rack) with harsh environmental coating
FACEPLATE/ DISPLAY C	English display
D	French display
R	Russian display
P	English display with 4 small and 12 large programmable pushbuttons
G	French display with 4 small and 12 large programmable pushbuttons
S	Russian display with 4 small and 12 large programmable pushbuttons
K	Enhanced front panel with English display
M	Enhanced front panel with French display
Q	Enhanced front panel with Russian display
U	Enhanced front panel with Chinese display
L	Enhanced front panel with English display and user-programmable pushbuttons
N	Enhanced front panel with French display and user-programmable pushbuttons
T	Enhanced front panel with Russian display and user-programmable pushbuttons
V	Enhanced front panel with Chinese display and user-programmable pushbuttons
W	Enhanced front panel with Turkish display
Y	Enhanced front panel with Turkish display and user-programmable pushbuttons
I	Enhanced front panel with German display
J	Enhanced front panel with German display and user-programmable pushbuttons
POWER SUPPLY H	125 / 250 V AC/DC power supply
(redundant supply must H	125 / 250 V AC/DC with redundant 125 / 250 V AC/DC power supply
be same type as main supply) L	24 to 48 V (DC only) power supply
L	24 to 48 V (DC only) with redundant 24 to 48 V DC power supply
CT/VT DSP	No DSP module (slot M only)
8L	Standard 4CT/4VT with enhanced diagnostics
8M	Sensitive Ground 4CT/4VT with enhanced diagnostics
8N	Standard 8CT with enhanced diagnostics
8R	Sensitive Ground 8CT with enhanced diagnostics
DIGITAL INPUTS/OUTPUTS XX	No Module
4A	4 Solid-State (no monitoring) MOSFET outputs
4B	4 Solid-State (voltage with optional current) MOSFET outputs
4C	4 Solid-State (current with optional voltage) MOSFET outputs
4D	16 digital inputs with Auto-Burnishing (maximum of three modules within a case)
4L	14 Form-A (no monitoring) Latching outputs
67	8 Form-A (no monitoring) outputs
6A	2 Form-A (voltage with optional current) and 2 Form-C outputs, 8 digital inputs
6B	2 Form-A (voltage with optional current) and 4 Form-C outputs, 4 digital inputs
6C	8 Form-C outputs
6D	16 digital inputs
6E	4 Form-C outputs, 8 digital inputs
6F	8 Fast Form-C outputs
6G	4 Form-A (voltage with optional current) outputs, 8 digital inputs
6H	6 Form-A (voltage with optional current) outputs, 4 digital inputs
6K	4 Form-C and 4 Fast Form-C outputs
6L	2 Form-A (current with optional voltage) and 2 Form-C outputs, 8 digital inputs
6M	2 Form-A (current with optional voltage) and 4 Form-C outputs, 4 digital inputs
6N	4 Form-A (current with optional voltage) outputs, 8 digital inputs
6P	6 Form-A (current with optional voltage) outputs, 4 digital inputs
6R	2 Form-A (no monitoring) and 2 Form-C outputs, 8 digital inputs
6S	2 Form-A (no monitoring) and 4 Form-C outputs, 4 digital inputs
6T	4 Form-A (no monitoring) outputs, 8 digital inputs
6U	6 Form-A (no monitoring) outputs, 4 digital inputs
6V	2 Form-A outputs, 1 Form-C output, 2 Form-A (no monitoring) latching outputs, 8 digital inputs
TRANSDUCER 5A	4 DCmA inputs, 4 DCmA outputs (only one 5A or 5D module is allowed)
INPUTS/OUTPUTS 5C	8 RTD inputs
(select a maximum of 3 per unit) 5D	4 RTD inputs, 4 DCmA outputs (only one 5A or 5D module is allowed)
5E	4 RTD inputs, 4 DCmA inputs
5F	8 DCmA inputs
INTER-RELAY COMMUNICATIONS 2A	C37.94SM, 1300 nm single-mode, ELED, 1 channel single-mode
(select a maximum of 1 per unit) 2B	C37.94SM, 1300 nm single-mode, ELED, 2 channel single-mode
2H	IEEE C37.94, 820 nm, 128 kbps, multimode, LED, 2 Channels
2I	Channel 1 - IEEE C37.94, MM, 64/128 kbps; Channel 2 - 1300 nm, single-mode, Laser
2J	Channel 1 - IEEE C37.94, MM, 64/128 kbps; Channel 2 - 1550 nm, single-mode, Laser
72	1550 nm, single-mode, Laser, 1 Channel
73	1550 nm, single-mode, Laser, 2 Channel
76	IEEE C37.94, 820 nm, 64 kbps, multimode, LED, 1 Channel
77	IEEE C37.94, 820 nm, 64 kbps, multimode, LED, 2 Channels
7A	820 nm, multimode, LED, 1 Channel
7B	1300 nm, multimode, LED, 1 Channel
7C	1300 nm, single-mode, ELED, 1 Channel
7D	1300 nm, single-mode, Laser, 1 Channel
7F	Channel 1 - G.703; Channel 2 - 1300 nm, multimode
7G	Channel 1 - G.703; Channel 2 - 1300 nm, single-mode ELED
7H	820 nm, multimode, LED, 2 Channels
7I	1300 nm, multimode, LED, 2 Channels
7J	1300 nm, single-mode, ELED, 2 Channels
7K	1300 nm, single-mode, Laser, 2 Channels
7M	Channel 1 - RS422; Channel 2 - 1300 nm, multimode, LED
7N	Channel 1 - RS422; Channel 2 - 1300 nm, single-mode, ELED
7P	Channel 1 - RS422; Channel 2 - 1300 nm, single-mode, Laser
7Q	Channel 1 - G.703; Channel 2 - 1300 nm, single-mode Laser
7R	G.703, 1 Channel
7S	G.703, 2 Channels
7T	RS422, 1 Channel
7W	RS422, 2 Channels

The order codes for the reduced size vertical mount units are shown below.

Table 2–5: G60 ORDER CODES (REDUCED SIZE VERTICAL UNITS)

G60 - * ** - * * * - F ** - H ** - M ** - P/R **	
	Reduced Size Vertical Mount (see note regarding P/R slot below)
BASE UNIT G60	Base Unit
CPU T	RS485 and Three Multi-mode fiber 100Base-FX (SFP with LC)
U	RS485 and Two Multi-mode fiber 100Base-FX (SFP with LC), One 10/100Base-T (SFP with RJ45)
V	RS485 and Three 10/100Base-T (SFP with RJ45)
SOFTWARE 00	No Software Options
01	Ethernet Global Data (EGD)
03	IEC 61850
04	Ethernet Global Data (EGD) and IEC 61850
06	Phasor measurement unit (PMU)
07	IEC 61850 and phasor measurement unit (PMU)
A0	CyberSentry Lvl 1
A1	CyberSentry Lvl 1 and Ethernet Global Data (EGD)
A3	CyberSentry Lvl 1 and IEC 61850
A4	CyberSentry Lvl 1 and IEC 61850 and Ethernet Global Data (EGD)
A6	CyberSentry Lvl 1 and phasor measurement unit (PMU)
A7	CyberSentry Lvl 1 and IEC 61850 and phasor measurement unit (PMU)
B0	IEEE 1588
B1	IEEE 1588 and Ethernet Global Data (EGD)
B3	IEEE 1588 and IEC 61850
B4	IEEE 1588 and IEC 61850 and Ethernet Global Data (EGD)
B6	IEEE 1588 and phasor measurement unit (PMU)
B7	IEEE 1588 and IEC 61850 and phasor measurement unit (PMU)
C0	Parallel Redundancy Protocol (PRP)
C1	PRP and Ethernet Global Data
C3	PRP and IEC 61850
C4	PRP, Ethernet Global Data, and IEC 61850
C6	PRP and PMU
C7	PRP, IEC 61850, and PMU
D0	IEEE 1588 and CyberSentry Lvl 1
D1	IEEE 1588 and CyberSentry Lvl 1 and Ethernet Global Data (EGD)
D3	IEEE 1588 and CyberSentry Lvl 1 and IEC 61850
D4	IEEE 1588 and CyberSentry Lvl 1 and IEC 61850 and Ethernet Global Data (EGD)

Table 2–5: G60 ORDER CODES (REDUCED SIZE VERTICAL UNITS)

G60 - * ** - * * * - F ** - H ** - M ** - P/R **	Reduced Size Vertical Mount (see note regarding P/R slot below)
D6	IEEE 1588 and CyberSentry Lvl 1 and phasor measurement unit (PMU)
D7	IEEE 1588 and CyberSentry Lvl 1 and IEC 61850 and phasor measurement unit (PMU)
E0	IEEE 1588 and PRP
E1	IEEE 1588, PRP, and Ethernet Global Dada
E3	IEEE 1588, PRP, and IEC 61850
E4	IEEE 1588, PRP, Ethernet Global Data, and IEC 61850
E6	IEEE 1588, PRP, and PMU
E7	IEEE 1588, PRP, IEC 61850, and PMU
F0	PRP and CyberSentry Lvl1
F1	PRP, CyberSentry Lvl1, and Ethernet Global Data
F3	PRP, CyberSentry Lvl 1, and IEC 61850
F4	PRP, CyberSentry Lvl 1, Ethernet Global Data, and IEC 61850
F6	PRP, CyberSentry Lvl 1, and PMU
F7	PRP, CyberSentry Lvl 1, IEC 61850, and PMU
G0	IEEE 1588, PRP, and CyberSentry Lvl 1
G1	IEEE 1588, PRP, CyberSentry Lvl 1, Ethernet Global Data
G3	IEEE 1588, PRP, CyberSentry Lvl 1, and IEC 61850
G4	IEEE 1588, PRP, CyberSentry Lvl 1, Ethernet Global Data, and IEC 61850
G6	IEEE 1588, PRP, CyberSentry Lvl 1, and PMU
G7	IEEE 1588, PRP, CyberSentry Lvl 1, IEC 61850, and PMU
J0	IEC 60870-5-103
J1	IEC 60870-5-103 + EGD
J3	IEC 60870-5-103 + IEC 61850
J4	IEC 60870-5-103 + EGD + IEC 61850
J6	IEC 60870-5-103 + PMU
J7	IEC 60870-5-103 + IEC 61850 + PMU
K0	IEEE1588 + PRP + IEC 60870-5-103
K1	IEEE1588 + PRP + IEC 60870-5-103 + EGD
K3	IEEE1588 + PRP + IEC 60870-5-103 + IEC 61850
K4	IEEE1588 + PRP + IEC 60870-5-103 + EGD + IEC 61850
K6	IEEE1588 + PRP + IEC 60870-5-103 + PMU
K7	IEEE1588 + PRP + IEC 60870-5-103 + IEC 61850 + PMU
L0	IEC 60870-5-103 + IEEE1588 + PRP + CyberSentry Lvl 1
L1	IEC 60870-5-103 + IEEE1588 + PRP + CyberSentry Lvl 1 + EGD
L3	IEC 60870-5-103 + IEEE1588 + PRP + CyberSentry Lvl 1 + IEC 61850
L4	IEC 60870-5-103 + IEEE1588 + PRP + CyberSentry Lvl 1 + EGD + IEC 61850
L6	IEC 60870-5-103 + IEEE1588 + PRP + CyberSentry Lvl 1 + PMU
L7	IEC 60870-5-103 + IEEE1588 + PRP + CyberSentry Lvl 1 + IEC 61850 + PMU
MOUNT/COATING	
V	Vertical (3/4 rack)
B	Vertical (3/4 rack) with harsh environmental coating
FACEPLATE/ DISPLAY	
F	English display
D	French display
R	Russian display
K	Enhanced front panel with English display
M	Enhanced front panel with French display
Q	Enhanced front panel with Russian display
U	Enhanced front panel with Chinese display
L	Enhanced front panel with English display and user-programmable pushbuttons
N	Enhanced front panel with French display and user-programmable pushbuttons
T	Enhanced front panel with Russian display and user-programmable pushbuttons
V	Enhanced front panel with Chinese display and user-programmable pushbuttons
W	Enhanced front panel with Turkish display
Y	Enhanced front panel with Turkish display and user-programmable pushbuttons
I	Enhanced front panel with German display
J	Enhanced front panel with German display and user-programmable pushbuttons
POWER SUPPLY	
H	125 / 250 V AC/DC power supply
L	24 to 48 V (DC only) power supply
CT/VT DSP	
XX	No DSP module (slot M only)
8L	Standard 4CT/4VT with enhanced diagnostics
8M	Sensitive Ground 4CT/4VT with enhanced diagnostics
8N	Standard 8CT with enhanced diagnostics
8R	Sensitive Ground 8CT with enhanced diagnostics
DIGITAL INPUTS/OUTPUTS	
XX	No Module
4A	4 Solid-State (no monitoring) MOSFET outputs
4B	4 Solid-State (voltage with optional current) MOSFET outputs
4C	4 Solid-State (current with optional voltage) MOSFET outputs
4D	16 digital inputs with Auto-Burnishing (maximum of three modules within a case)
4L	14 Form-A (no monitoring) Latching outputs
67	8 Form-A (no monitoring) outputs
6A	2 Form-A (voltage with optional current) and 2 Form-C outputs, 8 digital inputs
6B	2 Form-A (voltage with optional current) and 4 Form-C outputs, 4 digital inputs
6C	8 Form-C outputs
6D	16 digital inputs
6E	4 Form-C outputs, 8 digital inputs
6F	8 Fast Form-C outputs
6G	4 Form-A (voltage with optional current) outputs, 8 digital inputs
6H	6 Form-A (voltage with optional current) outputs, 4 digital inputs
6K	4 Form-C and 4 Fast Form-C outputs
6L	2 Form-A (current with optional voltage) and 2 Form-C outputs, 8 digital inputs
6M	2 Form-A (current with optional voltage) and 4 Form-C outputs, 4 digital inputs
6N	4 Form-A (current with optional voltage) outputs, 8 digital inputs
6P	6 Form-A (current with optional voltage) outputs, 4 digital inputs
6R	2 Form-A (no monitoring) and 2 Form-C outputs, 8 digital inputs
6S	2 Form-A (no monitoring) and 4 Form-C outputs, 4 digital inputs
6T	4 Form-A (no monitoring) outputs, 8 digital inputs
6U	6 Form-A (no monitoring) outputs, 4 digital inputs
6V	2 Form-A outputs, 1 Form-C output, 2 Form-A (no monitoring) latching outputs, 8 digital inputs
TRANSDUCER INPUTS/OUTPUTS (select a maximum of 3 per unit)	
5A	4 DCmA inputs, 4 DCmA outputs (only one 5A or 5D module is allowed)
5C	8 RTD inputs
5D	4 RTD inputs, 4 DCmA outputs (only one 5A or 5D module is allowed)
5E	4 RTD inputs, 4 DCmA inputs
5F	8 DCmA inputs
INTER-RELAY COMMUNICATIONS (select a maximum of 1 per unit) For the last module, slot P is used for digital and transducer input/output modules; slot R is used for inter-relay communications modules.	
2A	C37.94SM, 1300 nm single-mode, ELED, 1 channel single-mode
2B	C37.94SM, 1300 nm single-mode, ELED, 2 channel single-mode
2H	IEEE C37.94, 820 nm, 128 kbps, multimode, LED, 2 Channels
2I	Channel 1 - IEEE C37.94, MM, 64/128 kbps; Channel 2 - 1300 nm, single-mode, Laser
2J	Channel 1 - IEEE C37.94, MM, 64/128 kbps; Channel 2 - 1550 nm, single-mode, Laser
72	1550 nm, single-mode, Laser, 1 Channel
73	1550 nm, single-mode, Laser, 2 Channel
76	IEEE C37.94, 820 nm, 64 kbps, multimode, LED, 1 Channel
77	IEEE C37.94, 820 nm, 64 kbps, multimode, LED, 2 Channels
7A	820 nm, multimode, LED, 1 Channel
7B	1300 nm, multimode, LED, 1 Channel
7C	1300 nm, single-mode, ELED, 1 Channel
7D	1300 nm, single-mode, Laser, 1 Channel
7F	Channel 1 - G.703; Channel 2 - 1300 nm, multimode
7G	Channel 1 - G.703; Channel 2 - 1300 nm, single-mode ELED
7H	820 nm, multimode, LED, 2 Channels
7I	1300 nm, multimode, LED, 2 Channels
7J	1300 nm, single-mode, ELED, 2 Channels
7K	1300 nm, single-mode, Laser, 2 Channels
7M	Channel 1 - RS422; Channel 2 - 1300 nm, multimode, LED
7N	Channel 1 - RS422; Channel 2 - 1300 nm, single-mode, ELED
7P	Channel 1 - RS422; Channel 2 - 1300 nm, single-mode, Laser
7Q	Channel 1 - G.703; Channel 2 - 1300 nm, single-mode Laser
7R	G.703, 1 Channel
7S	G.703, 2 Channels
7T	RS422, 1 Channel
7W	RS422, 2 Channels

2.2.3 ORDER CODES WITH PROCESS BUS MODULES

The order codes for the horizontal mount units with the process bus module are shown below.

Table 2–6: G60 ORDER CODES (HORIZONTAL UNITS WITH PROCESS BUS)

	G60	-	*	**	-	*	*	*	-	F	**	-	H	**	-	M	**	-	P	**	-	U	**	-	W/X	**	
BASE UNIT	G60																										Base Unit
CPU			T																								RS485 and Three Multi-mode fiber 100Base-FX (SFP with LC)
			U																								RS485 and Two Multi-mode fiber 100Base-FX (SFP with LC), One 10/100Base-T (SFP with RJ45)
			V																								RS485 and Three 10/100Base-T (SFP with RJ45)
SOFTWARE				00																							No Software Options
				01																							Ethernet Global Data (EGD)
				03																							IEC 61850
				04																							Ethernet Global Data (EGD) and IEC 61850
				06																							Phasor measurement unit (PMU)
				07																							IEC 61850 and phasor measurement unit (PMU)
				A0																							CyberSentry Lvl 1
				A1																							CyberSentry Lvl 1 and Ethernet Global Data (EGD)
				A3																							CyberSentry Lvl 1 and IEC 61850
				A4																							CyberSentry Lvl 1 and IEC 61850 and Ethernet Global Data (EGD)
				A6																							CyberSentry Lvl 1 and phasor measurement unit (PMU)
				A7																							CyberSentry Lvl 1 and IEC 61850 and phasor measurement unit (PMU)
				B0																							IEEE 1588
				B1																							IEEE 1588 and Ethernet Global Data (EGD)
				B3																							IEEE 1588 and IEC 61850
				B4																							IEEE 1588 and IEC 61850 and Ethernet Global Data (EGD)
				B6																							IEEE 1588 and phasor measurement unit (PMU)
				B7																							IEEE 1588 and IEC 61850 and phasor measurement unit (PMU)
				C0																							Parallel Redundancy Protocol (PRP)
				C1																							PRP and Ethernet Global Data
				C3																							PRP and IEC 61850
				C4																							PRP, Ethernet Global Data, and IEC 61850
				C6																							PRP and PMU
				C7																							PRP, IEC 61850, and PMU
				D0																							IEEE 1588 and CyberSentry Lvl 1
				D1																							IEEE 1588 and CyberSentry Lvl 1 and Ethernet Global Data (EGD)
				D3																							IEEE 1588 and CyberSentry Lvl 1 and IEC 61850
				D4																							IEEE 1588 and CyberSentry Lvl 1 and IEC 61850 and Ethernet Global Data (EGD)
				D6																							IEEE 1588 and CyberSentry Lvl 1 and phasor measurement unit (PMU)
				D7																							IEEE 1588 and CyberSentry Lvl 1 and IEC 61850 and phasor measurement unit (PMU)
				E0																							IEEE 1588 and PRP
				E1																							IEEE 1588, PRP, and Ethernet Global Dada
				E3																							IEEE 1588, PRP, and IEC 61850
				E4																							IEEE 1588, PRP, Ethernet Global Data, and IEC 61850
				E6																							IEEE 1588, PRP, and PMU
				E7																							IEEE 1588, PRP, IEC 61850, and PMU
				F0																							PRP and CyberSentry Lvl1
				F1																							PRP, CyberSentry Lvl1, and Ethernet Global Data
				F3																							PRP, CyberSentry Lvl 1, and IEC 61850
				F4																							PRP, CyberSentry Lvl 1, Ethernet Global Data, and IEC 61850
				F6																							PRP, CyberSentry Lvl 1, and PMU
				F7																							PRP, CyberSentry Lvl 1, IEC 61850, and PMU
				G0																							IEEE 1588, PRP, and CyberSentry Lvl 1
				G1																							IEEE 1588, PRP, CyberSentry Lvl 1, Ethernet Global Data
				G3																							IEEE 1588, PRP, CyberSentry Lvl 1, and IEC 61850
				G4																							IEEE 1588, PRP, CyberSentry Lvl 1, Ethernet Global Data, and IEC 61850
				G6																							IEEE 1588, PRP, CyberSentry Lvl 1, and PMU
				G7																							IEEE 1588, PRP, CyberSentry Lvl 1, IEC 61850, and PMU
				J0																							IEC 60870-5-103
				J1																							IEC 60870-5-103 + EGD
				J3																							IEC 60870-5-103 + IEC 61850
				J4																							IEC 60870-5-103 + EGD + IEC 61850
				J6																							IEC 60870-5-103 + PMU
				J7																							IEC 60870-5-103 + IEC 61850 + PMU
				K0																							IEEE 1588 + PRP + IEC 60870-5-103
				K1																							IEEE 1588 + PRP + IEC 60870-5-103 + EGD
				K3																							IEEE 1588 + PRP + IEC 60870-5-103 + IEC 61850
				K4																							IEEE 1588 + PRP + IEC 60870-5-103 + EGD + IEC 61850
				K6																							IEEE 1588 + PRP + IEC 60870-5-103 + PMU
				K7																							IEEE 1588 + PRP + IEC 60870-5-103 + IEC 61850 + PMU
				L0																							IEC 60870-5-103 + IEEE 1588 + PRP + CyberSentry Lvl 1
				L1																							IEC 60870-5-103 + IEEE 1588 + PRP + CyberSentry Lvl 1 + EGD
				L3																							IEC 60870-5-103 + IEEE 1588 + PRP + CyberSentry Lvl 1 + IEC 61850
				L4																							IEC 60870-5-103 + IEEE 1588 + PRP + CyberSentry Lvl 1 + EGD + IEC 61850
				L6																							IEC 60870-5-103 + IEEE 1588 + PRP + CyberSentry Lvl 1 + PMU
				L7																							IEC 60870-5-103 + IEEE 1588 + PRP + CyberSentry Lvl 1 + IEC 61850 + PMU
MOUNT/COATING						H																					Horizontal (19" rack)
						A																					Horizontal (19" rack) with harsh environmental coating
FACEPLATE/ DISPLAY							C																				English display
							D																				French display
							R																				Russian display
							P																				English display with 4 small and 12 large programmable pushbuttons
							G																				French display with 4 small and 12 large programmable pushbuttons
							S																				Russian display with 4 small and 12 large programmable pushbuttons
							K																				Enhanced front panel with English display
							M																				Enhanced front panel with French display
							Q																				Enhanced front panel with Russian display
							U																				Enhanced front panel with Chinese display
							L																				Enhanced front panel with English display and user-programmable pushbuttons
							N																				Enhanced front panel with French display and user-programmable pushbuttons
							T																				Enhanced front panel with Russian display and user-programmable pushbuttons
							V																				Enhanced front panel with Chinese display and user-programmable pushbuttons
							W																				Enhanced front panel with Turkish display
							Y																				Enhanced front panel with Turkish display and user-programmable pushbuttons
							I																				Enhanced front panel with German display
							J																				Enhanced front panel with German display and user-programmable pushbuttons

Table 2–6: G60 ORDER CODES (HORIZONTAL UNITS WITH PROCESS BUS)

G60 - * ** - * * - F ** - H ** - M ** - P ** - U ** - W/X **	
POWER SUPPLY	
H	125 / 250 V AC/DC power supply
(redundant supply must be same type as main supply)	
H	125 / 250 V AC/DC with redundant 125 / 250 V AC/DC power supply
L	24 to 48 V (DC only) power supply
L	24 to 48 V (DC only) with redundant 24 to 48 V DC power supply
PROCESS BUS MODULE	
81	Eight-port digital process bus module
DIGITAL INPUTS/OUTPUTS	
XX	No Module
4A	4 Solid-State (no monitoring) MOSFET outputs
4B	4 Solid-State (voltage with optional current) MOSFET outputs
4C	4 Solid-State (current with optional voltage) MOSFET outputs
4D	16 digital inputs with Auto-Burnishing (maximum of three modules within a case)
4L	14 Form-A (no monitoring) Latching outputs
67	8 Form-A (no monitoring) outputs
6A	2 Form-A (voltage with optional current) and 2 Form-C outputs, 8 digital inputs
6B	2 Form-A (voltage with optional current) and 4 Form-C outputs, 4 digital inputs
6C	8 Form-C outputs
6D	16 digital inputs
6E	4 Form-C outputs, 8 digital inputs
6F	8 Fast Form-C outputs
6G	4 Form-A (voltage with optional current) outputs, 8 digital inputs
6H	6 Form-A (voltage with optional current) outputs, 4 digital inputs
6K	4 Form-C and 4 Fast Form-C outputs
6L	2 Form-A (current with optional voltage) and 2 Form-C outputs, 8 digital inputs
6M	2 Form-A (current with optional voltage) and 4 Form-C outputs, 4 digital inputs
6N	4 Form-A (current with optional voltage) outputs, 8 digital inputs
6P	6 Form-A (current with optional voltage) outputs, 4 digital inputs
6R	2 Form-A (no monitoring) and 2 Form-C outputs, 8 digital inputs
6S	2 Form-A (no monitoring) and 4 Form-C outputs, 4 digital inputs
6T	4 Form-A (no monitoring) outputs, 8 digital inputs
6U	6 Form-A (no monitoring) outputs, 4 digital inputs
6V	2 Form-A outputs, 1 Form-C output, 2 Form-A (no monitoring) latching outputs, 8 digital inputs
INTER-RELAY COMMUNICATIONS (select a maximum of 1 per unit)	
2A	C37.94SM, 1300 nm single-mode, ELED, 1 channel single-mode
2B	C37.94SM, 1300 nm single-mode, ELED, 2 channel single-mode
2H	IEEE C37.94, 820 nm, 128 kbps, multimode, LED, 2 Channels
2I	Channel 1 - IEEE C37.94, MM, 64/128 kbps; Channel 2 - 1300 nm, single-mode, Laser
2J	Channel 1 - IEEE C37.94, MM, 64/128 kbps; Channel 2 - 1550 nm, single-mode, Laser
72	1550 nm, single-mode, Laser 1 Channel
73	1550 nm, single-mode, Laser, 2 Channel
76	IEEE C37.94, 820 nm, 64 kbps, multimode, LED, 1 Channel
77	IEEE C37.94, 820 nm, 64 kbps, multimode, LED, 2 Channels
7A	820 nm, multimode, LED, 1 Channel
7B	1300 nm, multimode, LED, 1 Channel
7C	1300 nm, single-mode, ELED, 1 Channel
7D	1300 nm, single-mode, Laser, 1 Channel
7F	Channel 1 - G.703; Channel 2 - 1300 nm, multimode
7G	Channel 1 - G.703; Channel 2 - 1300 nm, single-mode ELED
7H	820 nm, multimode, LED, 2 Channels
7I	1300 nm, multimode, LED, 2 Channels
7J	1300 nm, single-mode, ELED, 2 Channels
7K	1300 nm, single-mode, Laser, 2 Channels
7M	Channel 1 - RS422; Channel 2 - 1300 nm, multimode, LED
7N	Channel 1 - RS422; Channel 2 - 1300 nm, single-mode, ELED
7P	Channel 1 - RS422; Channel 2 - 1300 nm, single-mode, Laser
7Q	Channel 1 - G.703; Channel 2 - 1300 nm, single-mode Laser
7R	G.703, 1 Channel
7S	G.703, 2 Channels
7T	RS422, 1 Channel
7W	RS422, 2 Channels

The order codes for the reduced size vertical mount units with the process bus module are shown below.

Table 2–7: G60 ORDER CODES (REDUCED SIZE VERTICAL UNITS WITH PROCESS BUS)

G60 - * ** - * * - F ** - H ** - M ** - P/R **	
BASE UNIT	
G60	Base Unit
CPU	
T	RS485 and Three Multi-mode fiber 100Base-FX (SFP with LC)
U	RS485 and Two Multi-mode fiber 100Base-FX (SFP with LC), One 10/100Base-T (SFP with RJ45)
V	RS485 and Three 10/100Base-T (SFP with RJ45)
SOFTWARE	
00	No Software Options
01	Ethernet Global Data (EGD)
03	IEC 61850
04	Ethernet Global Data (EGD) and IEC 61850
06	Phasor measurement unit (PMU)
07	IEC 61850 and phasor measurement unit (PMU)
A0	CyberSentry Lvl 1
A1	CyberSentry Lvl 1 and Ethernet Global Data (EGD)
A3	CyberSentry Lvl 1 and IEC 61850
A4	CyberSentry Lvl 1 and IEC 61850 and Ethernet Global Data (EGD)
A6	CyberSentry Lvl 1 and phasor measurement unit (PMU)
A7	CyberSentry Lvl 1 and IEC 61850 and phasor measurement unit (PMU)
B0	IEEE 1588
B1	IEEE 1588 and Ethernet Global Data (EGD)
B3	IEEE 1588 and IEC 61850
B4	IEEE 1588 and IEC 61850 and Ethernet Global Data (EGD)
B6	IEEE 1588 and phasor measurement unit (PMU)
B7	IEEE 1588 and IEC 61850 and phasor measurement unit (PMU)
C0	Parallel Redundancy Protocol (PRP)
C1	PRP and Ethernet Global Data
C3	PRP and IEC 61850
C4	PRP, Ethernet Global Data, and IEC 61850
C6	PRP and PMU
C7	PRP, IEC 61850, and PMU
D0	IEEE 1588 and CyberSentry Lvl 1
D1	IEEE 1588 and CyberSentry Lvl 1 and Ethernet Global Data (EGD)
D3	IEEE 1588 and CyberSentry Lvl 1 and IEC 61850
D4	IEEE 1588 and CyberSentry Lvl 1 and IEC 61850 and Ethernet Global Data (EGD)
D6	IEEE 1588 and CyberSentry Lvl 1 and phasor measurement unit (PMU)
D7	IEEE 1588 and CyberSentry Lvl 1 and IEC 61850 and phasor measurement unit (PMU)
E0	IEEE 1588 and PRP
E1	IEEE 1588, PRP, and Ethernet Global Dada
E3	IEEE 1588, PRP, and IEC 61850
E4	IEEE 1588, PRP, Ethernet Global Data, and IEC 61850
E6	IEEE 1588, PRP, and PMU
E7	IEEE 1588, PRP, IEC 61850, and PMU
F0	PRP and CyberSentry Lvl1
F1	PRP, CyberSentry Lvl1, and Ethernet Global Data
F3	PRP, CyberSentry Lvl 1, and IEC 61850
F4	PRP, CyberSentry Lvl 1, Ethernet Global Data, and IEC 61850
F6	PRP, CyberSentry Lvl 1, and PMU
F7	PRP, CyberSentry Lvl 1, IEC 61850, and PMU
G0	IEEE 1588, PRP, and CyberSentry Lvl 1
G1	IEEE 1588, PRP, CyberSentry Lvl 1, Ethernet Global Data
G3	IEEE 1588, PRP, CyberSentry Lvl 1, and IEC 61850
G4	IEEE 1588, PRP, CyberSentry Lvl 1, Ethernet Global Data, and IEC 61850
G6	IEEE 1588, PRP, CyberSentry Lvl 1, and PMU
G7	IEEE 1588, PRP, CyberSentry Lvl 1, IEC 61850, and PMU
J0	IEC 60870-5-103
J1	IEC 60870-5-103 + EGD
J3	IEC 60870-5-103 + IEC 61850
J4	IEC 60870-5-103 + EGD + IEC 61850
J6	IEC 60870-5-103 + PMU
J7	IEC 60870-5-103 + IEC 61850 + PMU
K0	IEEE 1588 + PRP + IEC 60870-5-103
K1	IEEE 1588 + PRP + IEC 60870-5-103 + EGD
K3	IEEE 1588 + PRP + IEC 60870-5-103 + IEC 61850

Table 2–7: G60 ORDER CODES (REDUCED SIZE VERTICAL UNITS WITH PROCESS BUS)

G60	-	*	**	-	*	*	-	F	**	-	H	**	-	M	**	-	P/R	**	
			K4																IEEE 1588 + PRP + IEC 60870-5-103 + EGD + IEC 61850
			K6																IEEE 1588 + PRP + IEC 60870-5-103 + PMU
			K7																IEEE 1588 + PRP + IEC 60870-5-103 + IEC 61850 + PMU
			L0																IEC 60870-5-103 + IEEE 1588 + PRP + CyberSentry Lvl 1
			L1																IEC 60870-5-103 + IEEE 1588 + PRP + CyberSentry Lvl 1 + EGD
			L3																IEC 60870-5-103 + IEEE 1588 + PRP + CyberSentry Lvl 1 + IEC 61850
			L4																IEC 60870-5-103 + IEEE 1588 + PRP + CyberSentry Lvl 1 + EGD + IEC 61850
			L6																IEC 60870-5-103 + IEEE 1588 + PRP + CyberSentry Lvl 1 + PMU
			L7																IEC 60870-5-103 + IEEE 1588 + PRP + CyberSentry Lvl 1 + IEC 61850 + PMU
MOUNT/COATING					V														Vertical (3/4 rack)
					B														Vertical (3/4 rack) with harsh environmental coating
FACEPLATE/ DISPLAY						F													English display
						D													French display
						R													Russian display
						K													Enhanced front panel with English display
						M													Enhanced front panel with French display
						Q													Enhanced front panel with Russian display
						U													Enhanced front panel with Chinese display
						L													Enhanced front panel with English display and user-programmable pushbuttons
						N													Enhanced front panel with French display and user-programmable pushbuttons
						T													Enhanced front panel with Russian display and user-programmable pushbuttons
						V													Enhanced front panel with Chinese display and user-programmable pushbuttons
						W													Enhanced front panel with Turkish display
						Y													Enhanced front panel with Turkish display and user-programmable pushbuttons
						I													Enhanced front panel with German display
						J													Enhanced front panel with German display and user-programmable pushbuttons
POWER SUPPLY							H												125 / 250 V AC/DC power supply
							L												24 to 48 V (DC only) power supply
PROCESS BUS MODULE												81							Eight-port digital process bus module
DIGITAL INPUTS/OUTPUTS									XX						XX			XX	No Module
																		4A	4 Solid-State (no monitoring) MOSFET outputs
																		4B	4 Solid-State (voltage with optional current) MOSFET outputs
																		4C	4 Solid-State (current with optional voltage) MOSFET outputs
																		4D	16 digital inputs with Auto-Burnishing (maximum of three modules within a case)
																		4L	14 Form-A (no monitoring) Latching outputs
																		67	8 Form-A (no monitoring) outputs
																		6A	2 Form-A (voltage with optional current) and 2 Form-C outputs, 8 digital inputs
																		6B	2 Form-A (voltage with optional current) and 4 Form-C outputs, 4 digital inputs
																		6C	8 Form-C outputs
																		6D	16 digital inputs
																		6E	4 Form-C outputs, 8 digital inputs
																		6F	8 Fast Form-C outputs
																		6G	4 Form-A (voltage with optional current) outputs, 8 digital inputs
																		6H	6 Form-A (voltage with optional current) outputs, 4 digital inputs
																		6K	4 Form-C and 4 Fast Form-C outputs
																		6L	2 Form-A (current with optional voltage) and 2 Form-C outputs, 8 digital inputs
																		6M	2 Form-A (current with optional voltage) and 4 Form-C outputs, 4 digital inputs
																		6N	4 Form-A (current with optional voltage) outputs, 8 digital inputs
																		6P	6 Form-A (current with optional voltage) outputs, 4 digital inputs
																		6R	2 Form-A (no monitoring) and 2 Form-C outputs, 8 digital inputs
																		6S	2 Form-A (no monitoring) and 4 Form-C outputs, 4 digital inputs
																		6T	4 Form-A (no monitoring) outputs, 8 digital inputs
																		6U	6 Form-A (no monitoring) outputs, 4 digital inputs
																		6V	2 Form-A outputs, 1 Form-C output, 2 Form-A (no monitoring) latching outputs, 8 digital inputs
INTER-RELAY COMMUNICATIONS (select a maximum of 1 per unit) For the last module, slot P is used for digital input/output modules; slot R is used for inter-relay communications modules.																		2A	C37.94SM, 1300 nm single-mode, ELED, 1 channel single-mode
																		2B	C37.94SM, 1300 nm single-mode, ELED, 2 channel single-mode
																		2H	IEEE C37.94, 820 nm, 128 kbps, multimode, LED, 2 Channels
																		2I	Channel 1 - IEEE C37.94, MM, 64/128 kbps; Channel 2 - 1300 nm, single-mode, Laser
																		2J	Channel 1 - IEEE C37.94, MM, 64/128 kbps; Channel 2 - 1500 nm, single-mode, Laser
																		72	1550 nm, single-mode, Laser, 1 Channel
																		73	1550 nm, single-mode, Laser, 2 Channel
																		76	IEEE C37.94, 820 nm, 64 kbps, multimode, LED, 1 Channel
																		77	IEEE C37.94, 820 nm, 64 kbps, multimode, LED, 2 Channels
																		7A	820 nm, multimode, LED, 1 Channel
																		7B	1300 nm, multimode, LED, 1 Channel
																		7C	1300 nm, single-mode, ELED, 1 Channel
																		7D	1300 nm, single-mode, Laser, 1 Channel
																		7F	Channel 1 - G.703; Channel 2 - 1300 nm, multimode
																		7G	Channel 1 - G.703; Channel 2 - 1300 nm, single-mode ELED
																		7H	820 nm, multimode, LED, 2 Channels
																		7I	1300 nm, multimode, LED, 2 Channels
																		7J	1300 nm, single-mode, ELED, 2 Channels
																		7K	1300 nm, single-mode, Laser, 2 Channels
																		7M	Channel 1 - RS422; Channel 2 - 1300 nm, multimode, LED
																		7N	Channel 1 - RS422; Channel 2 - 1300 nm, single-mode, ELED
																		7P	Channel 1 - RS422; Channel 2 - 1300 nm, single-mode, Laser
																		7Q	Channel 1 - G.703; Channel 2 - 1300 nm, single-mode Laser
																		7R	G.703, 1 Channel
																		7S	G.703, 2 Channels
																		7T	RS422, 1 Channel
																		7W	RS422, 2 Channels

2.2.4 REPLACEMENT MODULES

Replacement modules can be ordered separately. When ordering a replacement CPU module or faceplate, provide the serial number of your existing unit.

NOTE

Not all replacement modules may be applicable to the G60 relay. Only the modules specified in the order codes are available as replacement modules.

Replacement module codes are subject to change without notice. See the ordering page at http://www.gegridsolutions.com/multilin/order.htm for the latest options.

The replacement module order codes for the horizontal mount units are shown below.

Table 2–8: ORDER CODES FOR REPLACEMENT MODULES, HORIZONTAL UNITS

	UR	-	**	-	*
POWER SUPPLY	|		SH	A	| 125 / 300 V AC/DC
redundant supply only available in horizontal units and must be same type as main supply, for example must swap both power supplies when switching from RH to SH	|		SL	A	| 24 to 48 V (DC only)
CPU	|		T		| RS485 with 3 100Base-FX Ethernet, multimode, SFP with LC
	|		U		| RS485 with 1 100Base-T Ethernet, SFP RJ-45 + 2 100Base-FX Ethernet, multimode, SFP with LC
	|		V		| RS485 with 3 100Base-T Ethernet, SFP with RJ-45
FACEPLATE/DISPLAY	|		3C		| Horizontal faceplate with keypad and English display
	|		3D		| Horizontal faceplate with keypad and French display
	|		3R		| Horizontal faceplate with keypad and Russian display
	|		3A		| Horizontal faceplate with keypad and Chinese display
	|		3P		| Horizontal faceplate with keypad, user-programmable pushbuttons, and English display
	|		3G		| Horizontal faceplate with keypad, user-programmable pushbuttons, and French display
	|		3S		| Horizontal faceplate with keypad, user-programmable pushbuttons, and Russian display
	|		3B		| Horizontal faceplate with keypad, user-programmable pushbuttons, and Chinese display
	|		3K		| Enhanced front panel with English display
	|		3M		| Enhanced front panel with French display
	|		3Q		| Enhanced front panel with Russian display
	|		3U		| Enhanced front panel with Chinese display
	|		3L		| Enhanced front panel with English display and user-programmable pushbuttons
	|		3N		| Enhanced front panel with French display and user-programmable pushbuttons
	|		3T		| Enhanced front panel with Russian display and user-programmable pushbuttons
	|		3V		| Enhanced front panel with Chinese display and user-programmable pushbuttons
	|		3I		| Enhanced front panel with German display
	|		3J		| Enhanced front panel with German display and user-programmable pushbuttons
CONTACT INPUTS AND OUTPUTS	|		4A		| 4 Solid-State (no monitoring) MOSFET outputs
	|		4B		| 4 Solid-State (voltage with optional current) MOSFET outputs
	|		4C		| 4 Solid-State (current with optional voltage) MOSFET outputs
	|		4D		| 16 contact inputs with Auto-Burnishing
	|		4L		| 14 Form-A (no monitoring) Latching outputs
	|		67		| 8 Form-A (no monitoring) outputs
	|		6A		| 2 Form-A (voltage with optional current) and 2 Form-C outputs, 8 contact inputs
	|		6B		| 2 Form-A (voltage with optional current) and 4 Form-C outputs, 4 contact inputs
	|		6C		| 8 Form-C outputs
	|		6D		| 16 contact inputs
	|		6E		| 4 Form-C outputs, 8 contact inputs
	|		6F		| 8 Fast Form-C outputs
	|		6G		| 4 Form-A (voltage with optional current) outputs, 8 contact inputs
	|		6H		| 6 Form-A (voltage with optional current) outputs, 4 contact inputs
	|		6K		| 4 Form-C and 4 Fast Form-C outputs
	|		6L		| 2 Form-A (current with optional voltage) and 2 Form-C outputs, 8 contact inputs
	|		6M		| 2 Form-A (current with optional voltage) and 4 Form-C outputs, 4 contact inputs
	|		6N		| 4 Form-A (current with optional voltage) outputs, 8 contact inputs
	|		6P		| 6 Form-A (current with optional voltage) outputs, 4 contact inputs
	|		6R		| 2 Form-A (no monitoring) and 2 Form-C outputs, 8 contact inputs
	|		6S		| 2 Form-A (no monitoring) and 4 Form-C outputs, 4 contact inputs
	|		6T		| 4 Form-A (no monitoring) outputs, 8 contact inputs
	|		6U		| 6 Form-A (no monitoring) outputs, 4 contact inputs
	|		6V		| 2 Form-A outputs, 1 Form-C output, 2 Form-A (no monitoring) latching outputs, 8 contact inputs
CT/VT MODULES	|		8L		| Standard 4CT/4VT with enhanced diagnostics
(NOT AVAILABLE FOR THE C30)	|		8N		| Standard 8CT with enhanced diagnostics
	|		8M		| Sensitive Ground 4CT/4VT with enhanced diagnostics
	|		8R		| Sensitive Ground 8CT with enhanced diagnostics
INTER-RELAY COMMUNICATIONS	|		2A		| C37.94SM, 1300 nm single-mode, ELED, 1 channel single-mode
	|		2B		| C37.94SM, 1300 nm single-mode, ELED, 2 channel single-mode
	|		2H		| IEEE C37.94, 820 nm, 128 kbps, multimode, LED, 2 Channels
	|		2I		| Channel 1 - IEEE C37.94, multimode, 64/128 kbps; Channel 2 - 1300 nm, single-mode, Laser
	|		2J		| Channel 1 - IEEE C37.94, multimode, 64/128 kbps; Channel 2 - 1550 nm, single-mode, Laser
	|		72		| 1550 nm, single-mode, Laser, 1 Channel
	|		73		| 1550 nm, single-mode, Laser, 2 Channel
	|		76		| IEEE C37.94, 820 nm, multimode, LED, 1 Channel
	|		77		| IEEE C37.94, 820 nm, multimode, LED, 2 Channels
	|		7A		| 820 nm, multimode, LED, 1 Channel
	|		7B		| 1300 nm, multimode, LED, 1 Channel
	|		7C		| 1300 nm, single-mode, ELED, 1 Channel
	|		7D		| 1300 nm, single-mode, Laser, 1 Channel
	|		7F		| Channel 1 - G.703; Channel 2 - 1300 nm, multimode
	|		7G		| Channel 1 - G.703; Channel 2 - 1300 nm, single-mode ELED
	|		7H		| 820 nm, multimode, LED, 2 Channels
	|		7I		| 1300 nm, multimode, LED, 2 Channels
	|		7J		| 1300 nm, single-mode, ELED, 2 Channels
	|		7K		| 1300 nm, single-mode, Laser, 2 Channels
	|		7M		| Channel 1 - RS422; Channel 2 - 1300 nm, multimode, LED
	|		7N		| Channel 1 - RS422; Channel 2 - 1300 nm, single-mode, ELED
	|		7P		| Channel 1 - RS422; Channel 2 - 1300 nm, single-mode, Laser
	|		7Q		| Channel 1 - G.703; Channel 2 - 1300 nm, single-mode Laser
	|		7R		| G.703, 1 Channel
	|		7S		| G.703, 2 Channels
	|		7T		| RS422, 1 Channel
	|		7W		| RS422, 2 Channels
TRANSDUCER	|		5A		| 4 DCmA inputs, 4 DCmA outputs (only one 5A or 5D module is allowed)
INPUTS/OUTPUTS	|		5C		| 8 RTD inputs
	|		5D		| 4 RTD inputs, 4 DCmA outputs (only one 5A or 5D module is allowed)
	|		5E		| 4 DCmA inputs, 4 RTD inputs
	|		5F		| 8 DCmA inputs

The replacement module order codes for the reduced-size vertical mount units are shown below.

Table 2–9: ORDER CODES FOR REPLACEMENT MODULES, VERTICAL UNITS

UR	-	**	-	*	
POWER SUPPLY		SH	B		125 / 300 V AC/DC
		SL	B		24 to 48 V (DC only)
CPU		T			RS485 with 3 100Base-FX Ethernet, multimode, SFP with LC
		U			RS485 with 1 100Base-T Ethernet, SFP RJ-45 + 2 100Base-FX Ethernet, multimode, SFP with LC
		V			RS485 with 3 100Base-T Ethernet, SFP with RJ-45
FACEPLATE/DISPLAY		3F			Vertical faceplate with keypad and English display
		3D			Vertical faceplate with keypad and French display
		3R			Vertical faceplate with keypad and Russian display
		3A			Vertical faceplate with keypad and Chinese display
		3K			Enhanced front panel with English display
		3M			Enhanced front panel with French display
		3Q			Enhanced front panel with Russian display
		3U			Enhanced front panel with Chinese display
		3L			Enhanced front panel with English display and user-programmable pushbuttons
		3N			Enhanced front panel with French display and user-programmable pushbuttons
		3T			Enhanced front panel with Russian display and user-programmable pushbuttons
		3V			Enhanced front panel with Chinese display and user-programmable pushbuttons
		3I			Enhanced front panel with German display
		3J			Enhanced front panel with German display and user-programmable pushbuttons
CONTACT INPUTS/OUTPUTS		4A			4 Solid-State (no monitoring) MOSFET outputs
		4B			4 Solid-State (voltage with optional current) MOSFET outputs
		4C			4 Solid-State (current with optional voltage) MOSFET outputs
		4D			16 contact inputs with Auto-Burnishing
		4L			14 Form-A (no monitoring) Latching outputs
		67			8 Form-A (no monitoring) outputs
		6A			2 Form-A (voltage with optional current) and 2 Form-C outputs, 8 contact inputs
		6B			2 Form-A (voltage with optional current) and 4 Form-C outputs, 4 contact inputs
		6C			8 Form-C outputs
		6D			16 contact inputs
		6E			4 Form-C outputs, 8 contact inputs
		6F			8 Fast Form-C outputs
		6G			4 Form-A (voltage with optional current) outputs, 8 contact inputs
		6H			6 Form-A (voltage with optional current) outputs, 4 contact inputs
		6K			4 Form-C and 4 Fast Form-C outputs
		6L			2 Form-A (current with optional voltage) and 2 Form-C outputs, 8 contact inputs
		6M			2 Form-A (current with optional voltage) and 4 Form-C outputs, 4 contact inputs
		6N			4 Form-A (current with optional voltage) outputs, 8 contact inputs
		6P			6 Form-A (current with optional voltage) outputs, 4 contact inputs
		6R			2 Form-A (no monitoring) and 2 Form-C outputs, 8 contact inputs
		6S			2 Form-A (no monitoring) and 4 Form-C outputs, 4 contact inputs
		6T			4 Form-A (no monitoring) outputs, 8 contact inputs
		6U			6 Form-A (no monitoring) outputs, 4 contact inputs
		6V			2 Form-A outputs, 1 Form-C output, 2 Form-A (no monitoring) latching outputs, 8 contact inputs
CT/VT MODULES		8L			Standard 4CT/4VT with enhanced diagnostics
(NOT AVAILABLE FOR THE C30)		8N			Standard 8CT with enhanced diagnostics
		8M			Sensitive Ground 4CT/4VT with enhanced diagnostics
		8R			Sensitive Ground 8CT with enhanced diagnostics
INTER-RELAY COMMUNICATIONS		2A			C37.94SM, 1300 nm single-mode, ELED, 1 channel single-mode
		2B			C37.94SM, 1300 nm single-mode, ELED, 2 channel single-mode
		2H			IEEE C37.94, 820 nm, 128 kbps, multimode, LED, 2 Channels
		2I			Channel 1 - IEEE C37.94, multimode, 64/128 kbps; Channel 2 - 1300 nm, single-mode, Laser
		2J			Channel 1 - IEEE C37.94, multimode, 64/128 kbps; Channel 2 - 1550 nm, single-mode, Laser
		72			1550 nm, single-mode, Laser, 1 Channel
		73			1550 nm, single-mode, Laser, 2 Channel
		76			IEEE C37.94, 820 nm, 64 kbps, multimode, LED, 1 Channel
		77			IEEE C37.94, 820 nm, 64 kbps, multimode, LED, 2 Channels
		7A			820 nm, multimode, LED, 1 Channel
		7B			1300 nm, multimode, LED, 1 Channel
		7C			1300 nm, single-mode, ELED, 1 Channel
		7D			1300 nm, single-mode, Laser, 1 Channel
		7F			Channel 1 - G.703; Channel 2 - 1300 nm, multimode
		7G			Channel 1 - G.703; Channel 2 - 1300 nm, single-mode ELED
		7H			820 nm, multimode, LED, 2 Channels
		7I			1300 nm, multimode, LED, 2 Channels
		7J			1300 nm, single-mode, ELED, 2 Channels
		7K			1300 nm, single-mode, Laser, 2 Channels
		7M			Channel 1 - RS422; Channel 2 - 1300 nm, multimode, LED
		7N			Channel 1 - RS422; Channel 2 - 1300 nm, single-mode, ELED
		7P			Channel 1 - RS422; Channel 2 - 1300 nm, single-mode, Laser
		7Q			Channel 1 - G.703; Channel 2 - 1300 nm, single-mode Laser
		7R			G.703, 1 Channel
		7S			G.703, 2 Channels
		7T			RS422, 1 Channel
		7W			RS422, 2 Channels
TRANSDUCER		5A			4 DCmA inputs, 4 DCmA outputs (only one 5A or 5D module is allowed)
INPUTS/OUTPUTS		5C			8 RTD inputs
		5D			4 RTD inputs, 4 DCmA outputs (only one 5A or 5D module is allowed)
		5E			4 DCmA inputs, 4 RTD inputs
		5F			8 DCmA inputs

2.3.1 UR SIGNAL PROCESSING

The UR series relays are microprocessor-based protective relays that are designed to measure power system conditions directly via CT and VT inputs and via other sources of information, such as analog inputs, communications inputs and contact inputs. The following figure shows the overall signal processing in URs.

An analog low pass anti-aliasing filter with a 3 dB corner frequency is set at 2.4 kHz and is used for current and voltage analog filtering as well as signal conditioning. The same filtering is applied for phase, ground currents, phase-to-phase (when applicable), and auxiliary voltages. The 2.4 kHz cut-off frequency applies to both 50 Hz and 60 Hz applications and fixed in the hardware, and thus is not dependent on the system nominal frequency setting.

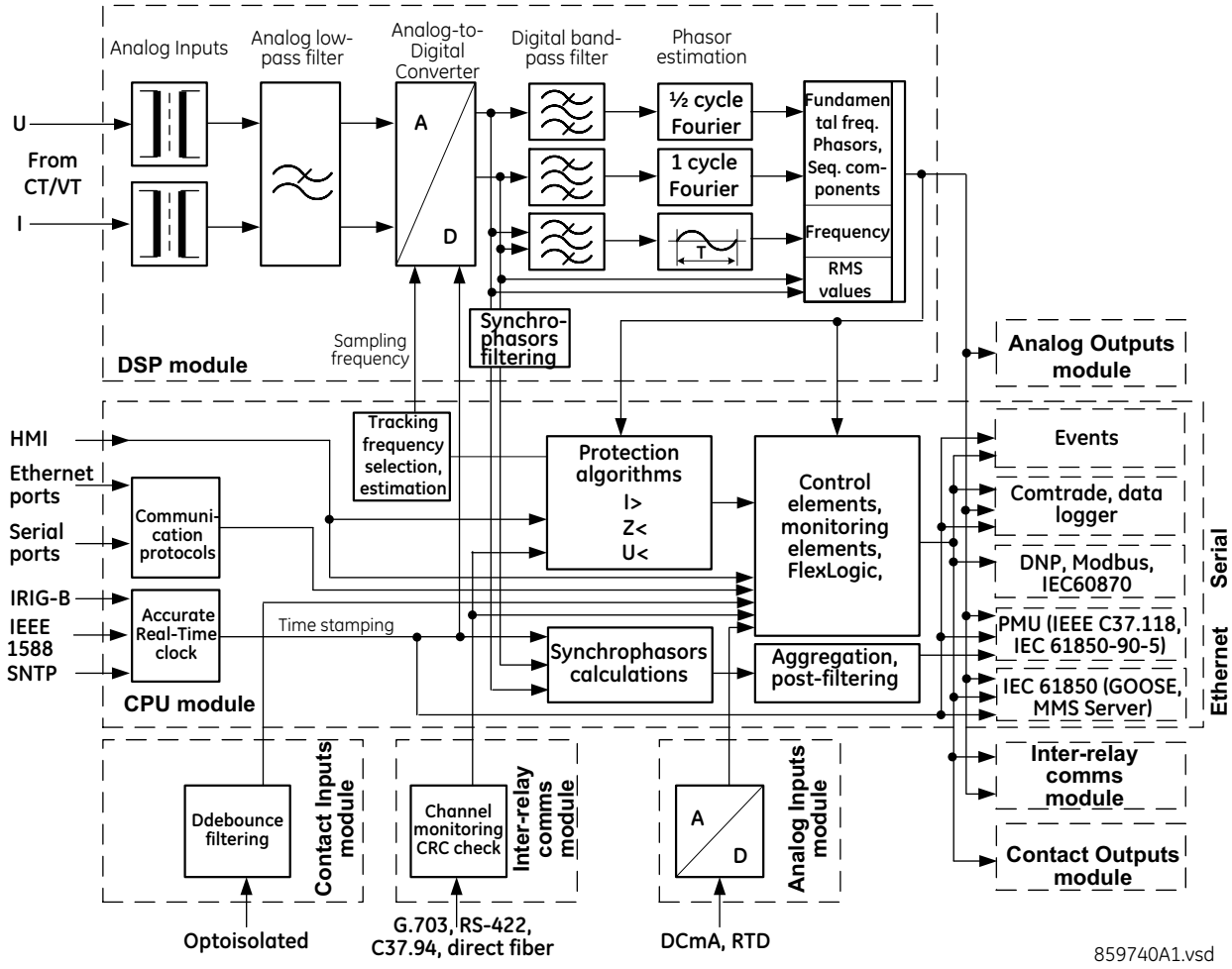

Figure 2–3: UR SIGNAL PROCESSING

The UR samples its AC signals at 64 samples per cycle, that is, at 3840 Hz in 60 Hz systems, and 3200 Hz in 50 Hz systems. The sampling rate is dynamically adjusted to the actual system frequency by an accurate and fast frequency tracking system.

The A/D converter has the following ranges of AC signals:

Voltages:

$$\pm\sqrt{2}\cdot 260(V) \qquad \textbf{(EQ 2.1)}$$

Currents:

$$\pm\sqrt{2}\cdot 46 rated(A) \quad \textbf{(EQ 2.2)}$$

Current harmonics are estimated based on raw samples with the use of the full-cycle Fourier filter. Harmonics 2nd through 25th are estimated.

True RMS value for the current is calculated on a per-phase basis. The true RMS can be used for demand recording or as an input signal to Time Overcurrent function, if the latter is intended for thermal protection. The true RMS is calculated as per the widely accepted definition:

$$I_{RMS(t)} = \sqrt{\frac{1}{T}\int_{(t-T)}^{t} i^2(t)dt} \quad \textbf{(EQ 2.3)}$$

RMS values include harmonics, inter-harmonics, DC components, and so on, along with fundamental frequency values. The true RMS value reflects thermal effects of the current and is used for the thermal related monitoring and protection functions.

Protection and control functions respond to phasors of the fundamental and/or harmonic frequency components (magnitudes and angles), with an exception for some functions that have an option for RMS or fundamental measurements, or some function responding to RMS only. This type of response is explained typically in each element's section in the instruction manual.

Currents are pre-filtered using a Finite Impulse Response (FIR) digital filter. The filter is designed to reject DC components and low-frequency distortions, without amplifying high-frequency noise. This filter is referred to as a modified MIMIC filter, which provides excellent filtering and overall balance between speed and accuracy of filtering. The filter is cascaded with the full-cycle Fourier filter for the current phasor estimation.

Voltages are pre-filtered using a patented Finite Impulse Response (FIR) digital filter. The filter has been optimized to reject voltage transformers specific distortions, such as Capacitive Voltage Transformer (CVT) noise and high-frequency oscillatory components. The filter is cascaded with the half-cycle Fourier filter for the voltage phasor estimation.

The URs measure power system frequency using the Clarke transformation by estimating the period of the waveform from two consecutive zero-crossings in the same direction (negative-to-positive). Voltage or current samples are pre-filtered using a Finite Impulse Response (FIR) digital filter to remove high frequency noise contained in the signal. The period is used after several security conditions are met, such as true RMS signal must be above 6% nominal for a certain time and others. If these security conditions are not met, the last valid measurement is used for a specific time after which the UR reverts to nominal system frequency.

Synchrophasors are calculated using a patented convolution integral algorithm. This algorithm allows use of the same time stamped samples, which are used for protection and taken at the same sampling frequency. This allows URs to use one sampling clock for both protection algorithms and synchrophasors.

Synchrophasors on firmware versions 7.23 and up have been tested and certified to meet IEEE C37.118-2011 and C37.118.1a-2014 standards for both metering and protection classes with outputs available up to 60 synchrophasors per second for the metering class and 120 synchrophasors per second for the protection class. Synchrophasors measurement are also available via IEC 61850-90-5 protocol.

Contact inputs threshold is settable in the firmware with 17, 33, 84, 166 VDC settings available. Inputs are scanned every 0.5 ms and can be conditioned for the critical applications, using debounce time timer, settable from 0.0 ms to 16.0 ms. Contact inputs with auto-burnishing are available as well, when external contacts are exposed to the contamination in a harsh industrial environment.

All measured values are available in the UR metering section on the front panel and via communications protocols. Measured analog values and binary signals can be captured in COMTRADE format with sampling rates from 8 to 64 samples per power cycle. Analog values can be captured with Data Logger, allowing much slower rates extended over long period of time.

Other advanced UR order code options are available to support IEC 61850 Ed2.0 (including fast GOOSE, MMS server, 61850 services, ICD/CID/IID files, and so on), IEEE 1588 (IEEE C37.238 power profile) based time synchronization, CyberSentry (advanced cyber security), the Parallel Redundancy Protocol (PRP), IEC 60870-5-103, and so on.

SPECIFICATIONS ARE SUBJECT TO CHANGE WITHOUT NOTICE

2.4.1 PROTECTION ELEMENTS

NOTE

The operating times include the activation time of a trip rated form-A output contact unless otherwise indicated. FlexLogic operands of a given element are 4 ms faster. Take this into account when using FlexLogic to interconnect with other protection or control elements of the relay, building FlexLogic equations, or interfacing with other IEDs or power system devices via communications or different output contacts. If not specified, the operate times given here are for a 60 Hz system at nominal system frequency. Operate times for a 50 Hz system are 1.2 times longer. Timer Accuracy is specified as a percentage of the total operating time that is the sum of the Operate Time and settable Pickup Delay.

PHASE DISTANCE

Characteristic:	mho (memory polarized or offset) or quad (memory polarized or non-directional), selectable individually per zone
Number of zones:	3
Directionality:	forward, reverse, or non-directional per zone
Reach (secondary Ω):	0.02 to 500.00 Ω in steps of 0.01
Reach accuracy:	
Zone 1:	±5% including the effect of CVT transients up to an SIR of 30 and ±7% for 30<SIR< 60 at RCA angle
Zones 2 to 3:	±5% for steady fault conditions
Distance:	
Characteristic angle:	30 to 90° in steps of 1
Comparator limit angle:	30 to 90° in steps of 1
Directional supervision:	
Characteristic angle:	30 to 90° in steps of 1
Limit angle:	30 to 90° in steps of 1
Right blinder (Quad only):	
Reach:	0.02 to 500 Ω in steps of 0.01
Characteristic angle:	60 to 90° in steps of 1
Left Blinder (Quad only):	
Reach:	0.02 to 500 Ω in steps of 0.01
Characteristic angle:	60 to 90° in steps of 1
Time delay:	0.000 to 65.535 s in steps of 0.001
Timer accuracy:	±3% of operate time or ±1/4 cycle (whichever is greater)
Current supervision:	
Level:	line-to-line current
Pickup:	0.050 to 30.000 pu in steps of 0.001
Dropout:	97 to 98%
Memory duration:	5 to 25 cycles in steps of 1
VT location:	all delta-wye and wye-delta transformers
CT location:	all delta-wye and wye-delta transformers
Voltage supervision pickup (series compensation applications):	0 to 5.000 pu in steps of 0.001
Operation time:	1 to 1.5 cycles (typical)
Reset time:	1 power cycle (typical)

STATOR DIFFERENTIAL

Pickup:	0.050 to 1.00 pu in steps of 0.01
Slope 1 and 2:	1 to 100% in steps of 1
Break 1:	1.00 to 1.50 pu in steps of 0.01
Break 2:	1.50 to 30.00 pu in steps of 0.01
Operate time:	<¾ cycle at I_{diff} > 5 × pickup

RESTRICTED GROUND FAULT

Pickup:	0.005 to 30.000 pu in steps of 0.001
Dropout:	97 to 98% of pickup
Level accuracy:	
0.1 to 2.0 x CT rating:	±0.5% of reading or ±1% of rated (whichever is greater)
>2.0 x CT rating	±1.5% of reading
Slope:	0 to 100% in steps of 1%
Pickup delay:	0 to 600.00 s in steps of 0.01
Dropout delay:	0 to 600.00 s in steps of 0.01
Operate time:	<2 power system cycles

PHASE/NEUTRAL/GROUND TOC

Current:	Phasor or RMS
Pickup level:	0.000 to 30.000 pu in steps of 0.001
Dropout level:	97% of pickup
Level accuracy:	
0.1 to 2.0 × CT:	±0.5% of reading or ±0.4% of rated (whichever is greater)
> 2.0 × CT:	±1.5% of reading > 2.0 × CT rating
Timing characteristics:	IEEE Moderately/Very/Extremely Inverse; IEC (and BS) A/B/C and Short Inverse; GE IAC Inverse, Short/Very/Extremely Inverse; I^2t; FlexCurves™ (programmable); (Curve multiplier 0.00 to 600.00 in steps of 0.01 s) Definite Time (Time delay = 0.00 to 600.00 in steps of 0.01 s)
Reset type:	Instantaneous/Timed (per IEEE)
Curve timing accuracy	
at 1.03 to 20 x pickup:	±3.5% of operate time or ±½ cycle (whichever is greater) from pickup to operate
Voltage restraint:	modifies pickup current for voltage in the range of 0.1<V<0.9 VT Nominal in a fixed linear relationship

PHASE/NEUTRAL/GROUND IOC

Pickup level: 0.000 to 30.000 pu in steps of 0.001
Dropout level: 97% of pickup
Level accuracy:
0.1 to 2.0 × CT rating: ±0.5% of reading or ±0.4% of rated (whichever is greater)
> 2.0 × CT rating ±1.5% of reading
Overreach: <2%
Pickup delay: 0.00 to 600.00 s in steps of 0.01
Reset delay: 0.00 to 600.00 s in steps of 0.01
Operate time: <16 ms at 3 × pickup at 60 Hz (Phase IOC)
<20 ms at 3 × pickup at 60 Hz (Neutral IOC)
<25 ms at 3 x pickup at 60 H (Ground IOC)
Timer accuracy: ±3.5% of operate time or ±1/4 cycle (whichever is greater)

PHASE DIRECTIONAL OVERCURRENT

Relay connection: 90° (quadrature)
Quadrature voltage: ABC phase seq.: phase A (V_{BC}), phase B (V_{CA}), phase C (V_{AB}); ACB phase seq.: phase A (V_{CB}), phase B (V_{AC}), phase C (V_{BA})
Polarizing voltage threshold: 0.000 to 3.000 pu in steps of 0.001
Current sensitivity threshold: 0.05 pu
Characteristic angle: 0 to 359° in steps of 1
Angle accuracy: ±2°
Operation time (FlexLogic operands):
Tripping (reverse load, forward fault):< 12 ms, typically
Blocking (forward load, reverse fault):< 8 ms, typically

NEUTRAL DIRECTIONAL OVERCURRENT

Directionality: Co-existing forward and reverse
Polarizing: Voltage, Current, Dual, Dual-V, Dual-I
Polarizing voltage: V_0 or VX
Polarizing current: IG
Operating current: I_0
Level sensing: 3 × (|I_0| – *K* × |I_1|), IG
Independent for forward and reverse
Restraint, *K*: 0.000 to 0.500 in steps of 0.001
Characteristic angle: –90 to 90° in steps of 1
Limit angle: 40 to 90° in steps of 1, independent for forward and reverse
Angle accuracy: ±2°
Offset impedance: 0.00 to 250.00 Ω in steps of 0.01
Pickup level: 0.002 to 30.000 pu in steps of 0.01
Dropout level: 97 to 98%
Operation time: <16 ms at 3 × pickup at 60 Hz

NEGATIVE SEQUENCE DIRECTIONAL OC

Directionality: Co-existing forward and reverse
Polarizing: Voltage
Polarizing voltage: V_2
Operating current: I_2
Level sensing:
Zero-sequence:|I_0| – *K* × |I_1|
Negative-sequence:|I_2| – *K* × |I_1|
Restraint, *K*: 0.000 to 0.500 in steps of 0.001
Characteristic angle: 0 to 90° in steps of 1
Limit angle: 40 to 90° in steps of 1, independent for forward and reverse
Angle accuracy: ±2°
Offset impedance: 0.00 to 250.00 Ω in steps of 0.01
Pickup level: 0.015 to 30.000 pu in steps of 0.01
Dropout level: 97%
Operation time: <16 ms at 3 × pickup at 60 Hz

GENERATOR UNBALANCE

Gen. nominal current: 0.000 to 1.250 pu in steps of 0.001
Stages: 2 (I^2t with linear reset and definite time)
Pickup level: 0.00 to 100.00% in steps of 0.01
Dropout level: 97 to 98% of pickup
Level accuracy:
0.1 to 2 x CT rating: ±0.5% of reading or 1% of rated (whichever is greater)
> 2.0 x CT rating: ±1.5% of reading
Time dial (K-value): 0.00 to 100.00 in steps of 0.01
Pickup delay: 0.0 to 1000.0 s in steps of 0.1
Reset delay: 0.0 to 1000.0 s in steps of 0.1
Timer accuracy: ±3% of operate time or ±20 ms, whichever is greater
Operate time: <50 ms at 60 Hz

SPLIT PHASE PROTECTION

Operating quantity: split phase CT current biased by generator load current
Pickup level: 0.020 to 1.500 pu in steps of 0.001
Dropout level: 97 to 98% of pickup
Level accuracy: ±0.5% of reading or ±1% of rated
Pickup delay: 0.000 to 65.535 s in steps of 0.001
Timer accuracy: ±3% of operate time or ±5 cycles, whichever is greater
Operate time: <5 cycles at 1.10 × pickup at 60 Hz

SENSITIVE DIRECTIONAL POWER

Measured power: 3-phase, true RMS
Number of stages: 2
Characteristic angle: 0 to 359° in steps of 1
Calibration angle: 0.00 to 0.95° in steps of 0.05
Minimum power: –1.200 to 1.200 pu in steps of 0.001
Pickup level accuracy: ±1% or ±0.001 pu, whichever is greater
Hysteresis: 2% or 0.001 pu, whichever is greater
Pickup delay: 0 to 600.00 s in steps of 0.01
Timer accuracy: ±3% of operate time or ±1/4 cycle (whichever is greater)
Operate time: <50 ms

PHASE UNDERVOLTAGE

Pickup level:	0.000 to 3.000 pu in steps of 0.001
Dropout level:	102% of pickup
Level accuracy:	±0.5% of reading from 10 to 208 V
Timing characteristics:	GE IAV Inverse (Curve multiplier 0.00 to 600.00 in steps of 0.01 s) Definite Time (Time delay = 0.00 to 600.00 in steps of 0.01 s)
Curve timing accuracy	
at <0.90 x pickup:	±3.5% of operate time or ±1/2 cycle (whichever is greater) from pickup to operate
Operate time:	<30 ms at 0.9 pickup at 60 Hz for Definite Time mode

AUXILIARY UNDERVOLTAGE

Pickup level:	0.000 to 3.000 pu in steps of 0.001
Dropout level:	103% of pickup
Level accuracy:	±0.5% of reading from 10 to 208 V
Timing characteristics:	GE IAV Inverse (Curve multiplier = 0.00 to 600.00 in steps of 0.01 s); Definite Time (Time delay = 0.00 to 600.00 in steps of 0.01 s)
Curve timing accuracy	
at <0.90 x pickup:	±3.5% of operate time or ±1/2 cycle (whichever is greater) from pickup to operate
Operate time:	<30 ms at 0.9 pickup at 60 Hz for Definite Time mode

THIRD HARMONIC NEUTRAL UNDERVOLTAGE

Operating quantity:	3rd harmonic of auxiliary undervoltage
Undervoltage:	
Pickup level:	0.0000 to 3.0000 pu in steps of 0.0001
Dropout level:	102 to 103% of pickup
Accuracy:	±2% of reading from 1 to 120 V
Power:	
Pickup level:	0.000 to 1.250 pu in steps of 0.001
Dropout level:	97 to 98% of pickup
Accuracy:	±5% or ±0.01 pu, whichever is greater
Undervoltage Inhibit	
Level:	0.000 to 1.250 pu in steps of 0.001 pu
Accuracy:	±0.5% of reading from 10 to 208 V
Pickup delay:	0 to 600.00 s in steps of 0.01
Timer accuracy:	±3% of operate time or ±20 ms, whichever is greater
Operate time:	<30 ms at 0.9 × pickup at 60 Hz

PHASE OVERVOLTAGE

Voltage:	Phasor only
Pickup level:	0.000 to 3.000 pu in steps of 0.001
Dropout level:	98% of pickup
Level accuracy:	±0.5% of reading from 10 to 208 V
Pickup delay:	0.00 to 600.00 in steps of 0.01 s
Operate time:	<30 ms at 1.10 × pickup at 60 Hz
Timer accuracy:	±3% of operate time or ±1/4 cycle (whichever is greater)

NEUTRAL OVERVOLTAGE

Pickup level:	0.000 to 3.000 pu in steps of 0.001
Dropout level:	97% of pickup
Level accuracy:	±0.5% of reading from 10 to 208 V
Pickup delay:	0.00 to 600.00 s in steps of 0.01 (definite time) or user-defined curve
Reset delay:	0.00 to 600.00 s in steps of 0.01
Curve timing accuracy	
at >1.1 x pickup:	±3.5% of operate time or ±1 cycle (whichever is greater) from pickup to operate
Operate time:	<30 ms at 1.10 × pickup at 60 Hz

AUXILIARY OVERVOLTAGE

Pickup level:	0.000 to 3.000 pu in steps of 0.001
Dropout level:	97% of pickup
Level accuracy:	±0.5% of reading from 10 to 208 V
Pickup delay:	0 to 600.00 s in steps of 0.01
Reset delay:	0 to 600.00 s in steps of 0.01
Timer accuracy:	±3% of operate time or ±1/4 cycle (whichever is greater)
Operate time:	<30 ms at 1.10 × pickup at 60 Hz

Operate time when 20 Hz injection is performed: 8 power system cycles

NEGATIVE SEQUENCE OVERVOLTAGE

Pickup level:	0.000 to 1.250 pu in steps of 0.001
Dropout level:	97% of pickup
Level accuracy:	±0.5% of reading from 10 to 208 V
Pickup delay:	0 to 600.00 s in steps of 0.01
Reset delay:	0 to 600.00 s in steps of 0.01
Timer accuracy:	±3% of operate time or ±20 ms, whichever is greater
Operate time:	<30 ms at 1.10 × pickup at 60 Hz

VOLTS PER HERTZ

Voltage:	Phase-to-phase or phase-to-ground, phasor only
Pickup level:	0.80 to 4.00 in steps of 0.01 pu V/Hz
Dropout level:	98% of pickup
Level accuracy:	±0.02 pu
Pickup delay:	0 to 600.00 s in steps of 0.01
Timing characteristics:	Inverse A, B, and C, FlexCurves A, B, C, and D (Curve multiplier 0.00 to 600.00 in steps of 0.01 s) Definite Time (Time delay = 0.00 to 600.00 in steps of 0.01 s)
Reset delay:	0.0 to 1000.0 s in steps of 0.1
Timer accuracy:	±3% of operate time or ±15 cycles (whichever is greater) for values greater than 1.1 × pickup

100% STATOR GROUND

Operating quantity: $\frac{V\_neutral\_3rd}{V\_neutral\_3rd + V\_zero\_3rd}$

Pickup level: 0.000 to 0.900 pu in steps of 0.001

Dropout level: 97 to 98% of pickup

Level accuracy: ±2% of reading from 1 to 120 V

Pickup delay: 0 to 600.00 s in steps of 0.01

3rd harmonic supervision level: 0.0010 to 0.1000 pu in steps of 0.0001

Timer accuracy: ±3% of operate time or ±20 ms, whichever is greater

Operate time: <30 ms at 1.10 × pickup at 60 Hz

SUB-HARMONIC STATOR GROUND

Stator ground resistance pickup accuracy: ±5% of reading from 1 to 10 kΩ, ±10% of reading from 10 to 20 kΩ

Total stator capacitance to ground: 200 nF to 2 µF

Sub-harmonic voltage metering accuracy: ±2% of reading or 0.2 V from 0.5 to 25 V AC

Sub-harmonic current metering accuracy: ±2% of reading or 5 mA from 5 to 200 mA

Sub-harmonic element operating time: 0.6 to 1.2 s

Sub-harmonic element dropout level accuracy: 102 to 103% of pickup

Time delay accuracy: ±3% of time delay setting or ± 4 ms, whichever is greater

FIELD GROUND

Measured field ground resistance: 1 kΩ to 20 MΩ

Ground resistance accuracy:±5% of reading ±250 Ω from 1 to 500 kΩ

Field winding capacitance: 1 to 10 µF

Maximum field voltage: 600 V DC rated field voltage / 1000 V ripple peak for single box option; 800 V DC rated field voltage / 2000 V ripple peak for external resistor box option

Field voltage measurement range: 15 to 800 V

Field voltage measurement accuracy: ±1 V or ±3% of reading (for GPM-F-L); ±1 V or ±5% of reading (for GPM-F-H)

Field ground RMS current accuracy: ±5% of reading

Fault location accuracy: ±5% of reading

Field ground resistance typical operating time: 1.1 s + (1 / injection frequency)

Field ground element dropout level accuracy: 102 to 103% of pickup

Time delay accuracy: ±3% of time delay setting or ±4ms, whichever is greater

FIELD CURRENT

Field current measurement (DCmA) accuracy: ±0.2% of full scale

Field overcurrent and undercurrent operating time: 1 power system cycle

Field current element dropout level accuracy: 102 to 103% of pickup for undercurrent and 97 to 98% of pickup for overcurrent

Time delay accuracy: ±3% of time delay setting or ±4 ms whichever is greater

UNDERFREQUENCY

Minimum signal: 0.10 to 1.25 pu in steps of 0.01

Pickup level: 20.00 to 65.00 Hz in steps of 0.01

Dropout level: pickup + 0.03 Hz

Level accuracy: ±0.001 Hz

Time delay: 0 to 65.535 s in steps of 0.001

Timer accuracy: ±3% of operate time or ±1/4 cycle (whichever is greater)

Operate time: typically 4 cycles at 0.1 Hz/s change
typically 3.5 cycles at 0.3 Hz/s change
typically 3 cycles at 0.5 Hz/s change

Typical times are average operate times including variables such as frequency change instance, test method, etc., and may vary by ±0.5 cycles.

OVERFREQUENCY

Pickup level: 20.00 to 65.00 Hz in steps of 0.01

Dropout level: pickup – 0.03 Hz

Level accuracy: ±0.001 Hz

Time delay: 0 to 65.535 s in steps of 0.001

Timer accuracy: ±3% of operate time or ±1/4 cycle (whichever is greater)

Operate time: typically 4 cycles at 0.1 Hz/s change
typically 3.5 cycles at 0.3 Hz/s change
typically 3 cycles at 0.5 Hz/s change

Typical times are average operate times including variables such as frequency change instance, test method, etc., and may vary by ±0.5 cycles.

RATE OF CHANGE OF FREQUENCY

df/dt trend: increasing, decreasing, bi-directional

df/dt pickup level: 0.10 to 15.00 Hz/s in steps of 0.01

df/dt dropout level: 96% of pickup

df/dt level accuracy: 80 mHz/s or 3.5%, whichever is greater

Overvoltage supv.: 0.100 to 3.000 pu in steps of 0.001

Overcurrent supv.: 0.000 to 30.000 pu in steps of 0.001

Pickup delay: 0 to 65.535 s in steps of 0.001

Reset delay: 0 to 65.535 s in steps of 0.001

Timer accuracy: ±3% of operate time or ±1/4 cycle (whichever is greater)

Operate time: typically 9.5 cycles at 2 × pickup
typically 8.5 cycles at 3 × pickup
typically 6.5 cycles at 5 × pickup

Typical times are average operate times including variables such as frequency change instance, test method, and so on, and can vary by ±0.5 cycles.

TURBINE FREQUENCY OUT-OF-BAND (OOB) ACCUMULATED OPERATING TIME

Frequency OOB accumulation: 7 sets; 20 to 70 Hz in steps of 0.01

Frequency OOB accumulation pickup: 1 to 65536 s in steps of 1

Frequency OOB accumulator preset: 1 to 65536 s in steps of 1

Level accuracy: ±0.01 Hz

Minimum volt/amp supervision: 0.1 to 1.25 pu of V_1 or I_1

Timer accuracy of accumulation: ±1% or 1 second, whichever is greater

BREAKER FAILURE

Mode:	1-pole, 3-pole
Current supervision:	phase, neutral current
Current supv. pickup:	0.001 to 30.000 pu in steps of 0.001
Current supv. dropout:	97% of pickup
Current supv. accuracy:	
0.1 to 2.0 × CT rating:	±0.75% of reading or ±2% of rated (whichever is greater)
above 2 × CT rating:	±2.5% of reading
Timer accuracy:	±3% of operate time or ±1/4 cycle (whichever is greater)

BREAKER FLASHOVER

Operating quantity:	phase current, voltage and voltage difference
Pickup level voltage:	0 to 1.500 pu in steps of 0.001
Dropout level voltage:	97% of pickup
Pickup level current:	0 to 1.500 pu in steps of 0.001
Dropout level current:	97% of pickup
Level accuracy:	±0.5% or ±0.1% of rated, whichever is greater
Pickup delay:	0 to 65.535 s in steps of 0.001
Timer accuracy:	±3% of operate time or ±42 ms, whichever is greater
Operate time:	<42 ms at 1.10 × pickup at 60 Hz

SYNCHROCHECK

Max voltage difference:	0 to 400000 V in steps of 1
Max angle difference:	0 to 100° in steps of 1
Max freq. difference:	0.00 to 2.00 Hz in steps of 0.01
Hysteresis for max. freq. diff.:	0.00 to 0.10 Hz in steps of 0.01
Dead source function:	None, LV1 & DV2, DV1 & LV2, DV1 or DV2, DV1 xor DV2, DV1 & DV2 (L = Live, D = Dead)

POWER SWING DETECT

Functions:	Power swing block, Out-of-step trip
Characteristic:	Mho or Quad
Measured impedance:	Positive-sequence
Blocking / tripping modes:	2-step or 3-step
Tripping mode:	Early or Delayed
Current supervision:	
Pickup level:	0.050 to 30.000 pu in steps of 0.001
Dropout level:	97 to 98% of pickup
Fwd / reverse reach (sec. Ω):	0.10 to 500.00 Ω in steps of 0.01
Left and right blinders (sec. Ω):	0.10 to 500.00 Ω in steps of 0.01
Impedance accuracy:	±5%
Fwd / reverse angle impedances:	40 to 90° in steps of 1
Angle accuracy:	±2°
Characteristic limit angles:	40 to 140° in steps of 1
Timers:	0.000 to 65.535 s in steps of 0.001
Timer accuracy:	±3% of operate time or ±1/4 cycle (whichever is greater)

ACCIDENTAL ENERGIZATION

Operating condition:	Overcurrent
Arming condition:	Undervoltage and/or Machine Offline
Overcurrent:	
Pickup level:	0.000 to 3.000 pu in steps of 0.001
Dropout level:	97 to 98% of pickup
Level accuracy:	±0.5% of reading from 0.1 to 2.0 × CT rating
Undervoltage:	
Pickup level:	0.000 to 3.000 pu in steps of 0.001
Dropout level:	102 to 103% of pickup
Level accuracy:	±0.5% of reading 10 to 208 V
Operate Time:	<30 ms at 1.10 × pickup at 60 Hz

LOSS OF EXCITATION

Operating condition:	Positive-sequence impedance
Characteristic:	2 independent offset mho circles
Center:	0.10 to 300.0 Ω (sec.) in steps of 0.01
Radius:	0.10 to 300.0 Ω (sec.) in steps of 0.01
Reach accuracy:	±3%
Undervoltage supervision	
Level:	0.000 to 1.250 pu in steps of 0.001
Accuracy:	±0.5% of reading from 10 to 208 V
Pickup delay:	0 to 65.535 s in steps of 0.001
Timer accuracy:	±3% of operate time or ±20 ms, whichever is greater
Operate time:	<50 ms

THERMAL OVERLOAD PROTECTION

Thermal overload curves:	IEC 255-8 curve
Base current:	0.20 to 3.00 pu in steps of 0.01
Overload (k) factor:	1.00 to 1.20 pu in steps of 0.05
Trip time constant:	0 to 1000 min. in steps of 1
Reset time constant:	0 to 1000 min. in steps of 1
Minimum reset time:	0 to 1000 min. in steps of 1
Timer accuracy (cold curve):	±100 ms or 2%, whichever is greater
Timer accuracy (hot curve):	±500 ms or 2%, whichever is greater for $I_p < 0.9 \times k \times I_b$ and $I / (k \times I_b) > 1.1$

RTD PROTECTION

Pickup:	1 to 249°C in steps of 1
Dropout level:	2°C of pickup
Timer accuracy:	<1 s
Elements:	trip and alarm

REMOTE RTD PROTECTION

Pickup level:	1 to 200°C
Dropout level:	2°C of pickup
Time delay:	<10 s
Elements:	trip and alarm

TRIP BUS (TRIP WITHOUT FLEXLOGIC)

Number of elements:	6
Number of inputs:	16
Operate time:	<2 ms at 60 Hz
Timer accuracy:	±3% or 10 ms, whichever is greater

FLEXLOGIC

Programming language:	Reverse Polish Notation with graphical visualization (keypad programmable)
Lines of code:	512
Internal variables:	64
Supported operations:	NOT, XOR, OR (2 to 16 inputs), AND (2 to 16 inputs), NOR (2 to 16 inputs), NAND (2 to 16 inputs), latch (reset-dominant), edge detectors, timers
Inputs:	any logical variable, contact, or virtual input
Number of timers:	32
Pickup delay:	0 to 60000 (ms, sec., min.) in steps of 1
Dropout delay:	0 to 60000 (ms, sec., min.) in steps of 1
Timer accuracy:	±0.1% of operate time or ±1/8 cycle, whichever is greater

FLEXCURVES™

Number:	4 (A through D)
Reset points:	40 (0 through 1 of pickup)
Operate points:	80 (1 through 20 of pickup)
Time delay:	0 to 65535 ms in steps of 1

FLEX STATES

Number:	up to 256 logical variables grouped under 16 Modbus addresses
Programmability:	any logical variable, contact, or virtual input

FLEXELEMENTS™

Number of elements:	16
Operating signal:	any analog actual value, or two values in differential mode
Operating signal mode:	signed or absolute value
Operating mode:	level, delta
Comparator direction:	over, under
Pickup level:	–90.000 to 90.000 pu in steps of 0.001
Hysteresis:	0.1 to 50.0% in steps of 0.1
Delta dt:	20 ms to 60 days
Pickup & dropout delay:	0.000 to 65.535 s in steps of 0.001

NON-VOLATILE LATCHES

Type:	set-dominant or reset-dominant
Number:	16 (individually programmed)
Output:	stored in non-volatile memory
Execution sequence:	as input prior to protection, control, and FlexLogic

USER-PROGRAMMABLE LEDs

Number:	48 plus trip and alarm
Programmability:	from any logical variable, contact, or virtual input
Reset mode:	self-reset or latched

LED TEST

Initiation:	from any contact input or user-programmable condition
Number of tests:	3, interruptible at any time
Duration of full test:	approximately 3 minutes
Test sequence 1:	all LEDs on
Test sequence 2:	all LEDs off, one LED at a time on for 1 s
Test sequence 3:	all LEDs on, one LED at a time off for 1 s

USER-DEFINABLE DISPLAYS

Number of displays:	16
Lines of display:	2 × 20 alphanumeric characters
Parameters:	up to 5, any Modbus register addresses
Invoking and scrolling:	keypad, or any user-programmable condition, including pushbuttons

CONTROL PUSHBUTTONS

Number of pushbuttons:	7
Operation:	drive FlexLogic operands

USER-PROGRAMMABLE PUSHBUTTONS (OPTIONAL)

Number of pushbuttons:	12 on basic front panel 16 on enhanced horizontal front panel 6 on enhanced vertical front panel
Mode:	self-reset, latched
Display message:	2 lines of 20 characters each
Drop-out timer:	0.00 to 60.00 s in steps of 0.05
Autoreset timer:	0.2 to 600.0 s in steps of 0.1
Hold timer:	0.0 to 10.0 s in steps of 0.1

SELECTOR SWITCH

Number of elements:	2
Upper position limit:	1 to 7 in steps of 1
Selecting mode:	time-out or acknowledge
Time-out timer:	3.0 to 60.0 s in steps of 0.1
Control inputs:	step-up and 3-bit
Power-up mode:	restore from non-volatile memory or synchronize to a 3-bit control input or synch/restore mode

DIGITAL ELEMENTS

Number of elements:	48
Operating signal:	any FlexLogic operand
Pickup delay:	0.000 to 999999.999 s in steps of 0.001
Dropout delay:	0.000 to 999999.999 s in steps of 0.001
Timing accuracy:	±3% or ±4 ms, whichever is greater

2.4.3 MONITORING

OSCILLOGRAPHY

Number of records:	3 to 64, configurable
Sampling rate:	8, 16, 32, or 64 samples per power cycle, configurable
Triggers:	any FlexLogic operand, configurable
Trigger position:	0 to 100%, configurable
Recorded data:	raw AC input channels
	up to 64 configured digital channels, representing any FlexLogic operand
	up to 16 configured analog channels, representing any measured analog value
Data storage:	in non-volatile memory
Format:	COMTRADE IEEE C37.111 (1999 or 2013)

EVENT RECORDER

Capacity:	1024 events
Time-tag:	to 1 microsecond
Triggers:	any FlexLogic operand, configurable
Data storage:	in non-volatile memory

USER-PROGRAMMABLE FAULT REPORT

Number of elements:	2
Pre-fault trigger:	any FlexLogic operand
Fault trigger:	any FlexLogic operand
Recorder quantities:	32 (any FlexAnalog^{TM} value)

DATA LOGGER

Number of channels:	1 to 16
Parameters:	any available analog actual value
Sampling rate:	15 to 3600000 ms in steps of 1
Trigger:	any FlexLogic operand
Mode:	continuous or triggered
Storage capacity:	(NN is dependent on memory)
	1-second rate: 01 channel for NN days 16 channels for NN days ↓ 60-minute rate: 01 channel for NN days 16 channels for NN days

PHASOR MEASUREMENT UNIT

Output format:	per IEEE C37.118-2011, C37.118.1a-2014, or IEC 61850-90-5 standard
Number of channels:	14 synchrophasors, 8 analogs, 16 digitals
TVE (total vector error)	<1%
Triggering:	frequency, voltage, current, power, rate of change of frequency, user-defined
Reporting rate:	1, 2, 5, 10, 12, 15, 20, 25, 30, 50, or 60 times per second for P and M class, and 100 or 120 times per second for P class only
Number of clients:	One over TCP/IP port and one over UDP/IP per aggregator
AC ranges:	As indicated in appropriate specifications sections
Network reporting format:	16-bit integer (for IEEE C37.118) or 32-bit IEEE floating point numbers
Network reporting style:	rectangular (real and imaginary for IEEE C37.188) or polar (magnitude and angle) coordinates
Post-filtering:	none, 3-point, 5-point, 7-point
Calibration:	±5° (angle) and ±5% (magnitude)

2.4.4 METERING

RMS CURRENT: PHASE, NEUTRAL, AND GROUND

Accuracy at	
0.1 to 2.0 × CT rating:	±0.25% of reading or ±0.1% of rated (whichever is greater)
> 2.0 × CT rating:	±1.0% of reading

RMS VOLTAGE

Accuracy:	±0.5% of reading from 10 to 208 V

REAL POWER (WATTS)

Accuracy at 0.1 to 1.5 x CT rating and 0.8 to 1.2 x VT rating:	±1.0% of reading at $-1.0 \le PF < -0.8$ and $0.8 < PF \le 10$

REACTIVE POWER (VARS)

Accuracy at 0.1 to 1.5 x CT rating and 0.8 to 1.2 x VT rating:	±1.0% of reading at $-0.2 \le PF \le 0.2$

APPARENT POWER (VA)

Accuracy at 0.1 to 1.5 x CT rating and 0.8 to 1.2 x VT rating:	±1.0% of reading

WATT-HOURS (POSITIVE AND NEGATIVE)

Accuracy:	±2.0% of reading
Range:	±0 to 1×10^6 MWh
Parameters:	three-phase only
Update rate:	50 ms

VAR-HOURS (POSITIVE AND NEGATIVE)

Accuracy: ±2.0% of reading
Range: ±0 to 1 × 10^6 Mvarh
Parameters: three-phase only
Update rate: 50 ms

CURRENT HARMONICS

Harmonics: 2nd to 25th harmonic: per phase, displayed as a % of $I(f_1)$ (current fundamental frequency phasor)
THD: per phase, displayed as a % of $I(f_1)$

Accuracy:
HARMONICS: with $I(f_1)$ 0.4 to 2.0 × CT rating: ±2% of reading or ±1% of 100%, whichever is greater
THD: with $I(f_1)$ from 0.4 to 2.0 × CT rating: ±2% of reading or ±1% of 100% per each harmonic, whichever is greater

Accuracy applies to: 2nd to 25th harmonic including THD with a regular CT/VT module
2nd to 15th harmonic including THD with a HardFiber Process Bus Module (order code 81)

VOLTAGE HARMONICS

Harmonics: 2nd to 25th harmonic: per phase, displayed as a % of $V(f_1)$ (voltage fundamental frequency phasor)
THD: per phase, displayed as a % of $V(f_1)$

Accuracy:
HARMONICS: with $V(f_1)$ 25 to 208 V: ±2% of reading or ±1% of 100%, whichever is greater
THD: with $V(f_1)$ 25 to 208 V: ±2% of reading or ±1% of 100% per each harmonic, whichever is greater

Accuracy applies to: 2nd to 25th harmonic including THD with a regular CT/VT module
2nd to 15th harmonic including THD with a HardFiber Process Bus Module (order code 81)

FREQUENCY

Accuracy for 20 to 65 Hz input at
V = 0.8 to 1.2 pu: ±0.001 Hz (when voltage signal is used for frequency measurement)
I = 0.1 to 0.25 pu: ±0.02 Hz (when current signal is used for frequency measurement)
I > 0.25 pu: ±0.005 Hz (when current signal is used for frequency measurement)

2.4.5 INPUTS

AC CURRENT

CT rated primary: 1 to 50000 A
CT rated secondary: 1 A or 5 A by connection
Relay burden: < 0.2 VA at rated secondary
Conversion range:
Standard CT: 0.02 to 46 × CT rating RMS symmetrical
Sensitive Ground CT module: 0.002 to 4.6 × CT rating RMS symmetrical
Current withstand: 20 ms at 250 times rated
1 sec at 100 times rated
continuous 4xInom
Short circuit rating: 150000 RMS symmetrical amperes, 250 V maximum (primary current to external CT)

AC VOLTAGE

VT rated secondary: 25.0 to 240.0 V
VT ratio: 1.00 to 24000.00
Relay burden: < 0.25 VA at 120 V
Conversion range: 1 to 275 V
Voltage withstand: continuous at 260 V to neutral
1 min/hr at 420 V to neutral

FREQUENCY

Nominal frequency setting: 25 to 60 Hz
Sampling frequency: 64 samples per power cycle
Tracking frequency range: 3 to 70 Hz

CONTACT INPUTS

Dry contacts: 1000 Ω maximum
Wet contacts: 300 V DC maximum
Selectable thresholds: 17 V, 33 V, 84 V, 166 V
Tolerance: ±10%
Contacts per common return: 4
Recognition time: < 1 ms
Debounce time: 0.0 to 16.0 ms in steps of 0.5
Continuous current draw: 4 mA (when energized)

CONTACT INPUTS WITH AUTO-BURNISHING

Dry contacts: 1000 Ω maximum
Wet contacts: 300 V DC maximum
Selectable thresholds: 17 V, 33 V, 84 V, 166 V
Tolerance: ±10%
Contacts per common return: 2
Recognition time: < 1 ms
Debounce time: 0.0 to 16.0 ms in steps of 0.5
Continuous current draw: 4 mA (when energized)
Auto-burnish impulse current: 50 to 70 mA
Duration of auto-burnish impulse: 25 to 50 ms

DCMA INPUTS

Current input (mA DC): 0 to –1, 0 to +1, –1 to +1, 0 to 5, 0 to 10, 0 to 20, 4 to 20 (programmable)
Input impedance: 379 Ω ±10%
Conversion range: –1 to + 20 mA DC
Accuracy: ±0.2% of full scale
Type: Passive

RTD INPUTS

Types (3-wire): 100 Ω Platinum, 100 & 120 Ω Nickel, 10 Ω Copper
Sensing current: 5 mA
Range: –50 to +250°C
Accuracy: ±2°C
Isolation: 36 V pk-pk

REMOTE RTD INPUTS

Wire type: three-wire
Sensor type: 100 Ω platinum (DIN 43760), 100 Ω nickel, 120 Ω nickel, 10 Ω copper
RTD sensing current: 3 mA
Range: –40 to 200°C
Accuracy: ±2°C
Lead resistance: 25 Ω maximum for Pt and Ni type; 3 Ω max. for Cu type
Isolation: 36 Vpk

IRIG-B INPUT

IRIG formats accepted: B000…B007, B120…B127
IRIG control bits: IEEE Std C37.118.1-2011
Amplitude modulation: 1 to 10 V pk-pk
DC shift: TTL–Compatible
Input impedance: 50 kΩ
Isolation: 2 kV

REMOTE INPUTS (IEC 61850 GSSE/GOOSE)

Input points: 32, configured from 64 incoming bit pairs
Remote devices: 16
Default states on loss of comms.: On, Off, Latest/Off, Latest/On
Remote DPS inputs: 5

DIRECT INPUTS

Input points: 32
Remote devices: 16
Default states on loss of comms.: On, Off, Latest/Off, Latest/On
Ring configuration: Yes, No
Data rate: 64 or 128 kbps
CRC: 32-bit
CRC alarm:
  Responding to: Rate of messages failing the CRC
  Monitoring message count: 10 to 10000 in steps of 1
  Alarm threshold: 1 to 1000 in steps of 1
Unreturned message alarm:
  Responding to: Rate of unreturned messages in the ring configuration
  Monitoring message count: 10 to 10000 in steps of 1
  Alarm threshold: 1 to 1000 in steps of 1

TELEPROTECTION

Input points: 16
Remote devices: 3
Default states on loss of comms.: On, Off, Latest/Off, Latest/On
Ring configuration: No
Data rate: 64 or 128 kbps
CRC: 32-bit

2.4.6 POWER SUPPLY

LOW RANGE

Nominal DC voltage: 24 to 48 V
Minimum DC voltage: 20 V
Maximum DC voltage: 60 V for RL power supply module (obsolete), 75 V for SL power supply module
Voltage loss hold-up: 200 ms duration at maximum load
NOTE: Low range is DC only.

HIGH RANGE

Nominal DC voltage: 125 to 250 V
Minimum DC voltage: 88 V
Maximum DC voltage: 300 V
Nominal AC voltage: 100 to 240 V at 50/60 Hz
Minimum AC voltage: 88 V at 25 to 100 Hz
Maximum AC voltage: 265 V at 25 to 100 Hz
Voltage loss hold-up: 200 ms duration at maximum load

ALL RANGES

Volt withstand: 2 × Highest Nominal Voltage for 10 ms
Power consumption: typical = 15 to 20 W/VA
maximum = 45 W/VA
contact factory for exact order code consumption

INTERNAL FUSE

RATINGS
  Low range power supply: 8 A / 250 V
  High range power supply: 4 A / 250 V
INTERRUPTING CAPACITY
  AC: 100 000 A RMS symmetrical
  DC: 10 000 A

FORM-A RELAY

Make and carry for 0.2 s: 30 A as per ANSI C37.90

Carry continuous: 6 A

Break (DC inductive, L/R = 40 ms):

VOLTAGE	CURRENT
24 V	1 A
48 V	0.5 A
125 V	0.3 A
250 V	0.2 A

Operate time: < 4 ms

Contact material: silver alloy

LATCHING RELAY

Make and carry for 0.2 s: 30 A as per ANSI C37.90

Carry continuous: 6 A as per IEEE C37.90

Break (DC resistive as per IEC 61810-1):

VOLTAGE	CURRENT
24 V	6 A
48 V	1.6 A
125 V	0.4 A
250 V	0.2 A

Operate time: < 4 ms

Contact material: silver alloy

Control: separate operate and reset inputs

Control mode: operate-dominant or reset-dominant

FORM-A VOLTAGE MONITOR

Applicable voltage: approx. 15 to 250 V DC

Trickle current: approx. 1 to 2.5 mA

FORM-A CURRENT MONITOR

Threshold current: approx. 80 to 100 mA

FORM-C AND CRITICAL FAILURE RELAY

Make and carry for 0.2 s: 30 A as per ANSI C37.90

Carry continuous: 8 A

Break (DC inductive, L/R = 40 ms):

VOLTAGE	CURRENT
24 V	1 A
48 V	0.5 A
125 V	0.3 A
250 V	0.2 A

Operate time: < 8 ms

Contact material: silver alloy

DCMA OUTPUTS

Range: –1 to 1 mA, 0 to 1 mA, 4 to 20 mA

Max. load resistance: 12 kΩ for –1 to 1 mA range
12 kΩ for 0 to 1 mA range
600 Ω for 4 to 20 mA range

Accuracy: ±0.75% of full-scale for 0 to 1 mA range
±0.5% of full-scale for –1 to 1 mA range
±0.75% of full-scale for 0 to 20 mA range

FAST FORM-C RELAY

Make and carry: 0.1 A max. (resistive load)

Minimum load impedance:

INPUT VOLTAGE	IMPEDANCE	
	2 W RESISTOR	1 W RESISTOR
250 V DC	20 KΩ	50 KΩ
120 V DC	5 KΩ	2 KΩ
48 V DC	2 KΩ	2 KΩ
24 V DC	2 KΩ	2 KΩ

Note: values for 24 V and 48 V are the same due to a required 95% voltage drop across the load impedance.

Operate time: < 0.6 ms

Internal Limiting Resistor: 100 Ω, 2 W

SOLID-STATE OUTPUT RELAY

Operate and release time: <100 µs

Maximum voltage: 265 V DC

Maximum leakage current in off state (excluding voltage monitor circuit current): 100 µA

Maximum continuous current: 5 A at 45°C; 4 A at 65°C

Make and carry:
for 0.2 s: 30 A as per ANSI C37.90
for 0.03 s 300 A

Breaking capacity:

	UL508	Utility application (autoreclose scheme)	Industrial application
Operations/ interval	5000 ops / 1 s-On, 9 s-Off	5 ops / 0.2 s-On, 0.2 s-Off within 1 minute	10000 ops / 0.2 s-On, 30 s-Off
	1000 ops / 0.5 s-On, 0.5 s-Off		
Break capability (0 to 250 V DC)	3.2 A L/R = 10 ms	10 A L/R = 40 ms	10 A L/R = 40 ms
	1.6 A L/R = 20 ms		
	0.8 A L/R = 40 ms		

CONTROL POWER EXTERNAL OUTPUT (FOR DRY CONTACT INPUT)

Capacity: 100 mA DC at 48 V DC

Isolation: ±300 Vpk

REMOTE OUTPUTS (IEC 61850 GSSE/GOOSE)

Standard output points: 32

User output points: 32

DIRECT OUTPUTS

Output points: 32

99% Settling time to a step change: 100 ms

Isolation: 1.5 kV

Driving signal: any FlexAnalog quantity

Upper and lower limit for the driving signal: –90 to 90 pu in steps of 0.001

GPM-F MODULE CONTACT INPUTS

Internal wetting: 24 V DC
Input comparator threshold: 6 V DC
External contact: dry
Current when energized: < 10 mA
Debounce time: 10 ms

GPM-F MODULE CRITICAL FAILURE RELAY

Make and carry: 30 A for 0.2 s as per ANSI C37.90
Continuous carry: 8 A
Break (DC inductive, L/R = 40 ms): 1 A at 24 V, 0.5 A at 48 V, 0.3 A at 125 V, 0.2 A at 250 V
Operate time: < 8 ms
Contact material: silver alloy

GPM-F MODULE POWER SUPPLY

GPM-F-L: 100 to 240V AC at 50/60Hz and 10 VA
125 to 250V DC at 10W
GPM-F-HM: 100 to 240V AC at 50/60Hz and 10 VA
125 to 250V DC at 10W

GPM-S-G MODULE CONTACT INPUTS

Internal wetting: 24 V DC
Input comparator threshold: 6 V DC
External contact: dry
Current when energized: < 10 mA
Debounce time: 10 ms

GPM-S-G MODULE POWER SUPPLY

Power supply: 100 to 240 V AC at 50/60 Hz and 110VA
125 to 250 V DC at 110W
Output ratings: 26 V rectangular at 20 Hz, load capability 80 VA

GPM-S-B MODULE

Power rating: 80VA
Input ratings: maximum 30 V rectangular at 20 Hz

GPM-F-R MODULE

Current limiting resistor: 12.5 Ω × 4
Voltage divider resistor: 5 Ω × 3

STATOR GROUND PROTECTION CT

Part number: 204-SD-43737
Turns ratio: 400:5A
Rating factor (RF): 3.0
Frequency: 20 Hz
Voltage insulation: 600 V
Basic impulse level (BIL): 10 kV

GPM-F-HM, GPM-F-L, GPM-F-R, GPM-S-B, AND GPM-S-G MODULE TYPE TESTS

TEST	REFERENCE STANDARD	TEST LEVEL	
		GPM-F TYPES	GPM-S TYPES
Dielectric voltage withstand	EN60255-5	2.3 kV AC / 4.6 kV DC	2.3 kV AC / 3.3 kV DC
Impulse voltage withstand	EN60255-5	5 kV	5 kV
Insulation	EN60255-5	500 V DC	500 V DC
Damped oscillatory	IEC61000-4-18IEC60255-22-1	2.5 kV CM, 1 kV DM	2.5 kV CM, 1 kV DM
Electrostatic discharge	EN61000-4-2/IEC60255-22-2	Level 4	Level 4
RF immunity	EN61000-4-3/IEC60255-22-3	20 V/m	20 V/m
Fast Transient Disturbance	EN61000-4-4/IEC60255-22-4	Class A and B	Class A and B
Surge Immunity	EN61000-4-5/IEC60255-22-5	Level 4	Level 4
Conducted RF Immunity	EN61000-4-6/IEC60255-22-6	Level 3	Level 3
Voltage interruption and ripple DC	IEC60255-11	15% ripple, 1 ms to 5 s interrupts	15% ripple, 1 ms to 5 s interrupts
Radiated and conducted emissions	CISPR11 / CISPR22 / IEC60255-25	Class A	Class A
Sinusoidal vibration	IEC60255-21-1	Class 2	Class 1
Shock and Bump	IEC60255-21-2	Class 2	Class 1
Seismic	IEC60255-21-3	Class 2	Class 1
Power magnetic immunity	IEC61000-4-8	Level 5	Level 5
Pulse magnetic immunity	IEC61000-4-9	Level 4	Level 4
Damped magnetic immunity	IEC61000-4-10	Level 4	Level 4
Voltage dip and interruption	IEC61000-4-11	0%, 40%, 70%, 80% dips; 250/300 cycle interrupts	0%, 40%, 70%, 80% dips; 250/300 cycle interrupts
Voltage ripple	IEC61000-4-17	15% ripple	15% ripple
Ingress protection	IEC60529	IP10	IP10
Environmental (cold)	IEC60068-2-1	–40°C, 16 hrs	–40°C, 16 hrs
Environmental (dry heat)	IEC60068-2-2	85°C, 16hrs	85°C, 16hrs
Relative humidity cyclic	IEC60068-2-30	6 day, variant 1	6 day, variant 1
SWC oscillatory	IEEE/ANSI C37.90.1	2.5 kV,1 MHz	2.5 kV,1 MHz
SWC transients	IEEE/ANSI C37.90.1	4 kV 2.5 kHz	4 kV 2.5 kHz
RF immunity	IEEE/ANSIC37.90.2	20 V/m	20 V/m
ESD	IEEE/ANSIC37.90.3	15 kV air / 8 kV contact	15 kV air / 8 kV contact
Safety	UL508	e83849 NKCR2	e83849 NKCR2
	UL C22.2-14	e83849 NKCR8	e83849 NKCR8

2.4.9 COMMUNICATION PROTOCOLS

RS232

Front port: 19.2 kbps, Modbus RTU

RS485

1 rear port: Up to 115 kbps, Modbus RTU, DNP 3, IEC 60870-5-103

Typical distance: 1200 m

Isolation: 2 kV, isolated together at 36 Vpk

FIBER ETHERNET PORT

Operates with 50/125 µm and 62.5/125 µm multimode fiber

PARAMETER	FIBER TYPE
	100 MB MULTI-MODE
Wavelength	1310 nm
Connector	LC
Transmit power	–20 dBm
Receiver sensitivity	–30 dBm
Power budget	10 dB
Maximum input power	–14 dBm
Typical distance	2 km
Full duplex	yes
Redundancy	yes

ETHERNET (10/100 MB TWISTED PAIR)

Modes: 10 MB, 10/100 MB (auto-detect)

Connector: RJ45

SIMPLE NETWORK TIME PROTOCOL (SNTP)

clock synchronization error: <10 ms (typical)

PRECISION TIME PROTOCOL (PTP)

PTP IEEE Std 1588-2008 (version 2)

Power Profile (PP) per IEEE Standard PC37.238-2011

Slave-only ordinary clock

Peer delay measurement mechanism

PARALLEL REDUNDANCY PROTOCOL (PRP) (IEC 62439-3 CLAUSE 4, 2012)

Ethernet ports used: 2 and 3

Networks supported: 10/100 MB Ethernet

OTHER

TFTP, HTTP, IEC 60870-5-104, Ethernet Global Data (EGD)

2.4.10 INTER-RELAY COMMUNICATIONS

SHIELDED TWISTED-PAIR INTERFACE OPTIONS

INTERFACE TYPE	TYPICAL DISTANCE
RS422	1200 m
G.703	100 m

NOTE RS422 distance is based on transmitter power and does not take into consideration the clock source provided by the user.

LINK POWER BUDGET AND MAXIMUM OPTICAL INPUT POWER

The following specifications apply to filter interface modules implemented from January 2012.

EMITTER, FIBER TYPE	CABLE TYPE	TRANSMIT POWER	RECEIVED SENSITIVITY	POWER BUDGET	MAXIMUM OPTICAL INPUT POWER
820 nm, Multimode	62.5/125 µm	-16 dBm	-32 dBm	16 dBm	-8 dBm
	50/125 µm	-20 dBm		12 dBm	
1300 nm, Multimode	62.5/125 µm	-16 dBm	-32 dBm	16 dBm	-8 dBm
	50/125 µm	-20 dBm		12 dBm	
1300 nm, Single mode	9/125 µm	-15 dBm	-32 dBm	17 dBm	-8 dBm
1300 nm Laser, Single mode	9/125 µm	0 dBm	-34 dBm	34 dBm	-8 dBm
1550 nm Laser, Single mode	9/125 µm	5 dBm	-34 dBm	39 dBm	-10 dBm

The following specifications apply to filter interface modules implemented before January 2012.

EMITTER, FIBER TYPE	TRANSMIT POWER	RECEIVED SENSITIVITY	POWER BUDGET	MAX. OPTICAL INPUT POWER
820 nm LED, Multimode	–20 dBm	–30 dBm	10 dB	–7.6 dBm
1300 nm LED, Multimode	–21 dBm	–30 dBm	9 dB	–11 dBm
1300 nm ELED, Single mode	–23 dBm	–32 dBm	9 dB	–14 dBm
1300 nm Laser, Single mode	–1 dBm	–30 dBm	29 dB	–14 dBm
1550 nm Laser, Single mode	+5 dBm	–30 dBm	35 dB	–14 dBm

NOTE These power budgets are calculated from the manufacturer's worst-case transmitter power and worst case receiver sensitivity.

NOTE The power budgets for the 1300 nm ELED are calculated from the manufacturer's transmitter power and receiver sensitivity at ambient temperature. At

extreme temperatures these values deviate based on component tolerance. On average, the output power decreases as the temperature is increased by a factor 1dB / 5°C.

TYPICAL LINK DISTANCE

EMITTER TYPE	CABLE TYPE	CONNECTOR TYPE	TYPICAL DISTANCE	
			BEFORE JANUARY 2012	FROM JANUARY 2012
820 nm LED, multimode	62.5/125 µm	ST	1.65 km	2 km
	50/125 µm	ST	1.65 km	2 km
1300 nm LED, multimode	62.5/125 µm	ST	4 km	5 km
	50/125 µm	ST	4 km	5 km
1300 nm ELED, single mode	9/125 µm	ST	11.4 km	20 km
1300 nm Laser, single mode	9/125 µm	ST	64 km	65 km
1550 nm Laser, single mode	9/125 µm	ST	105 km	125 km

NOTE

Typical distances listed are based on the following assumptions for system loss. As actual losses vary from one installation to another, the distance covered by your system may vary.

CONNECTOR LOSSES (TOTAL OF BOTH ENDS)

ST connector 0.7 dB (each)

FIBER LOSSES

820 nm multimode	3 dB/km
1300 nm multimode	1 dB/km
1300 nm single mode	0.35 dB/km
1550 nm single mode	0.25 dB/km
Splice losses:	One splice every 2 km, at 0.05 dB loss per splice.

SYSTEM MARGIN

3 dB additional loss added to calculations to compensate for all other losses.

Compensated difference in transmitting and receiving (channel asymmetry) channel delays using GPS satellite clock: 10 ms

2.4.11 ENVIRONMENTAL

AMBIENT TEMPERATURES

Maximum operating range: –40 to 85°C

Continuous operating range: –40 to 60°C[1]

1 Based on IEC 60068-2-1 and IEC 60068-2-2, Variant Bd and Ad for 16 hrs. The UR can operate up to a surrounding ambient of 85°C, however operating outside the recommended continuous temperature range for extended periods can result in MTBF degradation and decrease the response time of the LCD.

HUMIDITY

Humidity: operating up to 95% (non-condensing) at 55°C (as per IEC60068-2-30 variant 1, 6 days).

OTHER

Altitude:	2000 m (maximum)
Pollution degree:	II
Overvoltage category:	II
Ingress protection:	IP20 front, IP10 back (basic front panel and Rev. 1 enhanced front panel) IP40 front, IP10 back (Rev. 2 enhanced front panel) IP54 front with IP54 mounting collar accessory (Rev. 2 enhanced front panel)
Noise:	0 dB

G60 TYPE TESTS

TEST	REFERENCE STANDARD	TEST LEVEL
Dielectric voltage withstand	EN 60255-5	2.2 kV
Impulse voltage withstand	EN 60255-5	5 kV
Damped oscillatory	IEC 61000-4-18 / IEC 60255-22-1	2.5 kV CM, 1 kV DM
Electrostatic discharge	EN 61000-4-2 / IEC 60255-22-2	Level 3
RF immunity	EN 61000-4-3 / IEC 60255-22-3	Level 3
Fast transient disturbance	EN 61000-4-4 / IEC 60255-22-4	Class A and B
Surge immunity	EN 61000-4-5 / IEC 60255-22-5	Level 3 and 4
Conducted RF immunity	EN 61000-4-6 / IEC 60255-22-6	Level 3
Power frequency immunity	EN 61000-4-7 / IEC 60255-22-7	Class A and B
Voltage interruption and ripple DC	IEC 60255-11	12% ripple, 200 ms interrupts
Radiated and conducted emissions	CISPR11 / CISPR22 / IEC 60255-25	Class A
Sinusoidal vibration	IEC 60255-21-1	Class 1
Shock and bump	IEC 60255-21-2	Class 1
Seismic	IEC 60255-21-3	Class 1
Power magnetic immunity	IEC 61000-4-8	Level 5
Pulse magnetic immunity	IEC 61000-4-9	Level 4
Damped magnetic immunity	IEC 61000-4-10	Level 4
Voltage dip and interruption	IEC 61000-4-11	0, 40, 70, 80% dips; 250 / 300 cycle interrupts
Damped oscillatory	IEC 61000-4-12	2.5 kV CM, 1 kV DM
Conducted RF immunity, 0 to 150 kHz	IEC 61000-4-16	Level 4
Voltage ripple	IEC 61000-4-17	15% ripple
Ingress protection	IEC 60529	IP20 front, IP10 back
Cold	IEC 60068-2-1	–40°C for 16 hours
Hot	IEC 60068-2-2	85°C for 16 hours
Humidity	IEC 60068-2-30	6 days, variant 1
Damped oscillatory	IEEE/ANSI C37.90.1	2.5 kV, 1 MHz
RF immunity	IEEE/ANSI C37.90.2	20 V/m, 80 MHz to 1 GHz
Safety	UL 508	e83849 NKCR
Safety	UL C22.2-14	e83849 NKCR7
Safety	UL 1053	e83849 NKCR
Safety	IEC 60255-27	Insulation: class 1, Pollution degree: 2, Over voltage cat II

THERMAL

Products go through an environmental test based upon an Accepted Quality Level (AQL) sampling process.

2.4.14 APPROVALS

APPROVALS

COMPLIANCE	APPLICABLE COUNCIL DIRECTIVE	ACCORDING TO
CE	Low voltage directive	EN 60255-5
	EMC directive	EN 60255-26 / EN 50263
		EN 61000-6-5
C-UL-US	---	UL 508
		UL 1053
		C22.2 No. 14

2.4.15 MAINTENANCE

MOUNTING

Attach mounting brackets using 20 inch-pounds (±2 inch-pounds) of torque.

CLEANING

Normally, cleaning is not required; but for situations where dust has accumulated on the faceplate display, a dry cloth can be used.

NOTICE

To avoid deterioration of electrolytic capacitors, power up units that are stored in a de-energized state once per year, for one hour continuously.

a) HORIZONTAL UNITS

The G60 Generator Protection System is available as a 19-inch rack horizontal mount unit with a removable faceplate. The faceplate can be specified as either basic or enhanced at the time of ordering. The enhanced faceplate contains additional user-programmable pushbuttons and LED indicators.

The modular design allows the relay to be easily upgraded or repaired by a qualified service person. The faceplate is hinged to allow easy access to the removable modules, and is itself removable to allow mounting on doors with limited rear depth.

In November 2017, GE began transitioning to Rev. 2 of the enhanced horizontal front panel. This panel can be identified by the use of a screw instead of a knob to close the panel. It can conform to an IP54 rating with the IP54 mounting collar purchased separately. The IP54 mounting collar can be used in panel-mount installations, not 19-inch rack-mount installations. The IP54 mounting collar cannot be used with Rev. 1 enhanced front panels.

The case dimensions are shown below, along with panel cutout details for panel mounting. When planning the location of your panel cutout, ensure that provision is made for the faceplate to swing open without interference to or from adjacent equipment.

The relay must be mounted such that the faceplate sits semi-flush with the panel or switchgear door, allowing the operator access to the keypad and the RS232 communications port. The relay is secured to the panel with the use of four screws supplied with the relay.

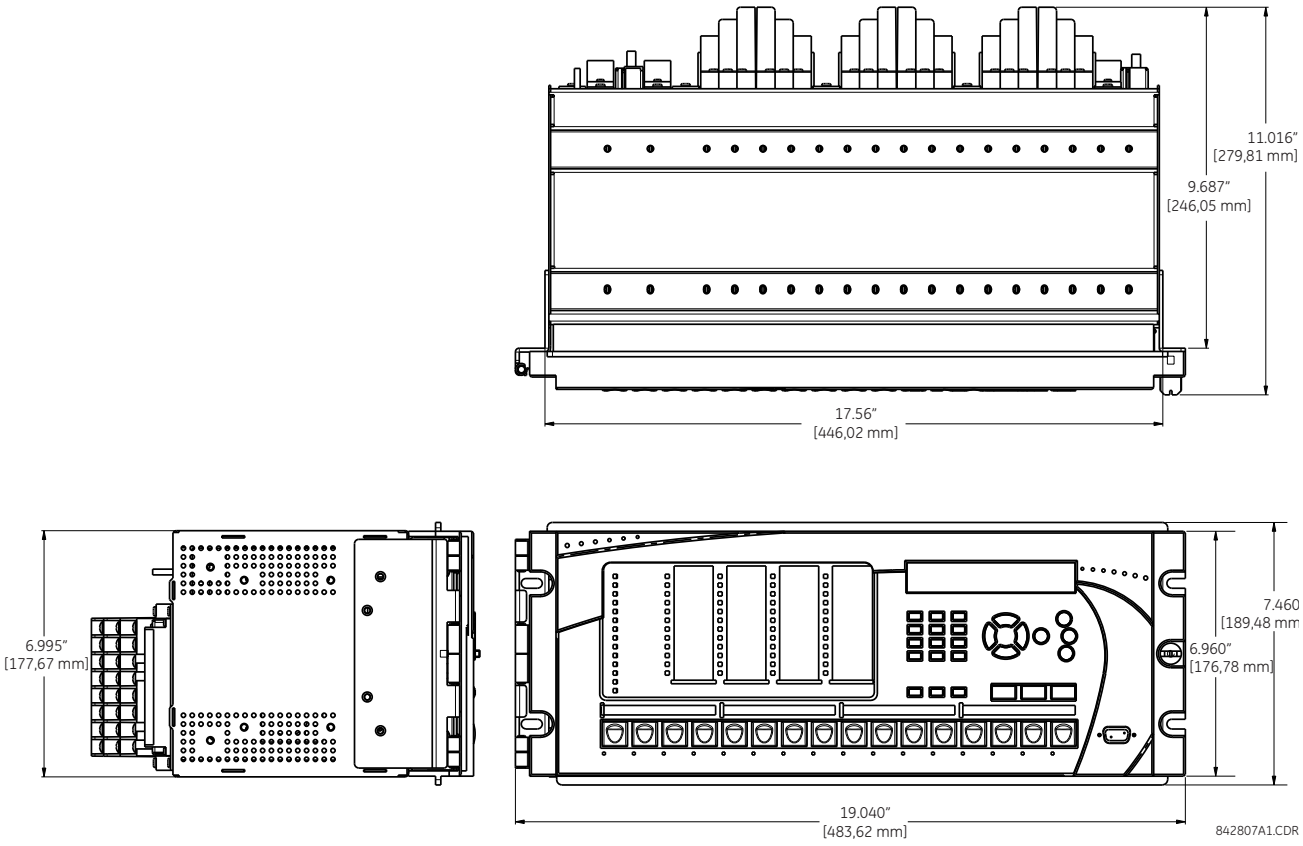

Figure 3–1: HORIZONTAL DIMENSIONS (REV. 1 ENHANCED FRONT PANEL)

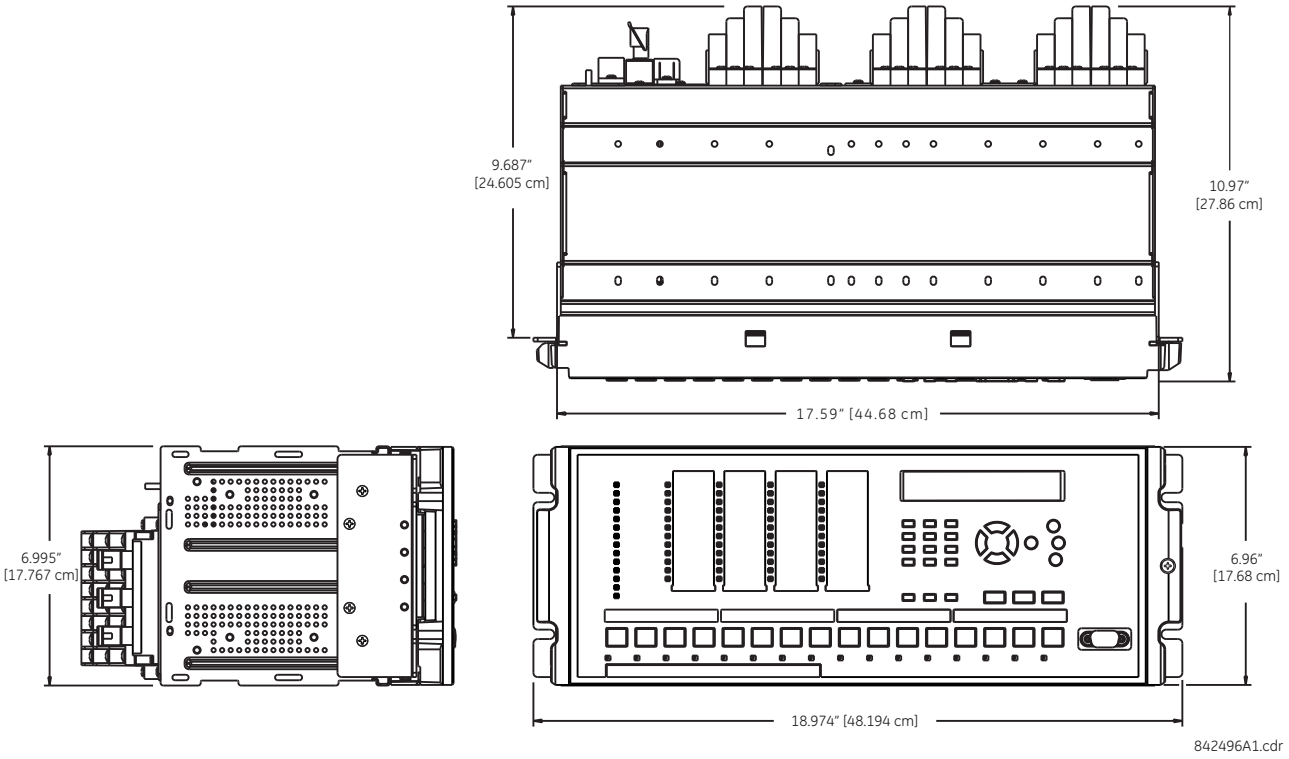

Figure 3–2: HORIZONTAL DIMENSIONS (REV. 2 ENHANCED FRONT PANEL)

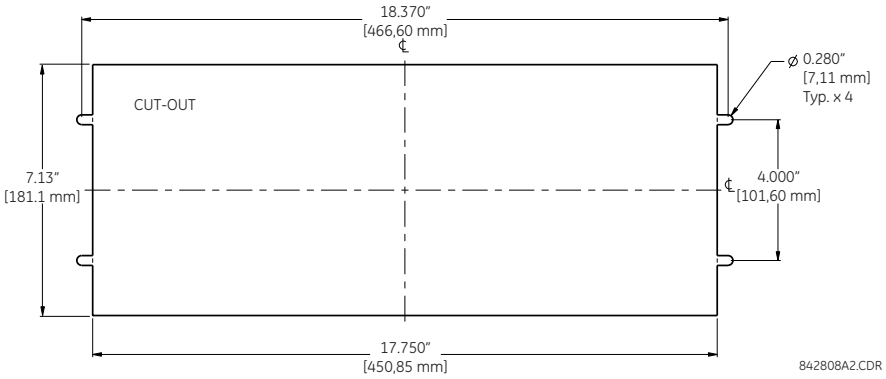

Figure 3–3: HORIZONTAL MOUNTING (ENHANCED FRONT PANEL)

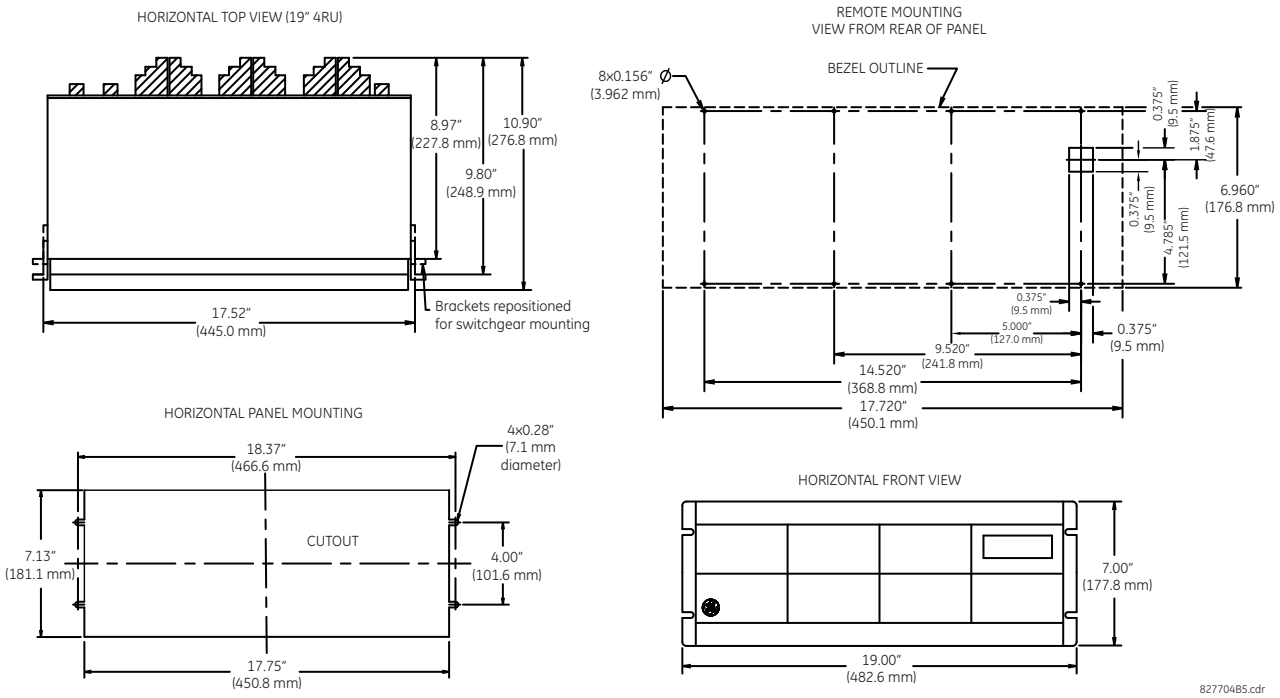

Figure 3–4: HORIZONTAL DIMENSIONS (BASIC FRONT PANEL)

b) VERTICAL UNITS

The G60 Generator Protection System is available as a reduced size (¾) vertical mount unit, with a removable faceplate. The faceplate can be specified as either basic or enhanced at the time of ordering. The enhanced faceplate contains additional user-programmable pushbuttons and LED indicators.

The modular design allows the relay to be easily upgraded or repaired by a qualified service person. The faceplate is hinged to allow easy access to the removable modules, and is itself removable to allow mounting on doors with limited rear depth.

The case dimensions are shown below, along with panel cutout details for panel mounting. When planning the location of your panel cutout, ensure that provision is made for the faceplate to swing open without interference to or from adjacent equipment.

The relay must be mounted such that the faceplate sits semi-flush with the panel or switchgear door, allowing the operator access to the keypad and the RS232 communications port. The relay is secured to the panel with the use of four screws supplied with the relay.

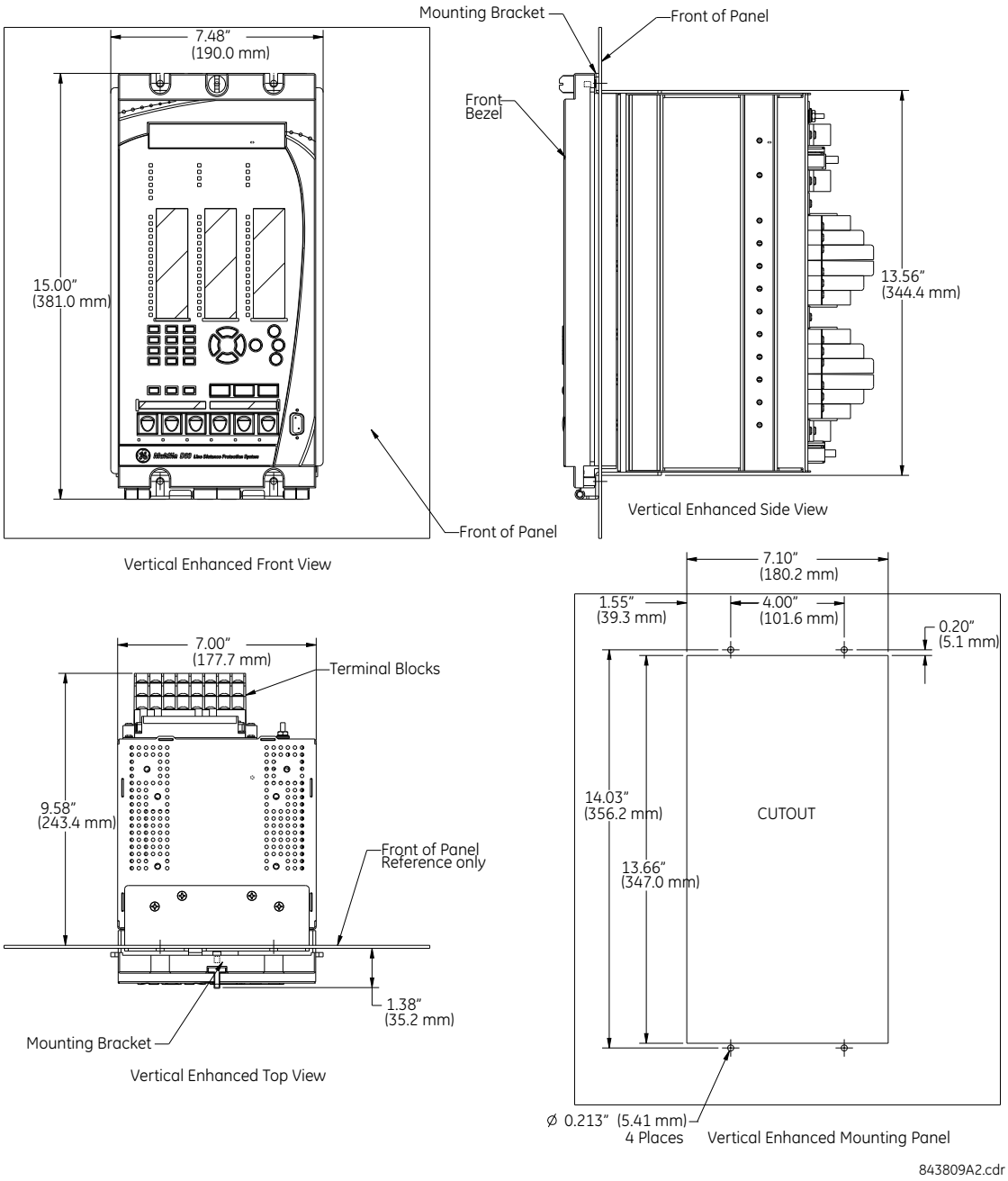

Figure 3–5: G60 VERTICAL DIMENSIONS (ENHANCED PANEL)

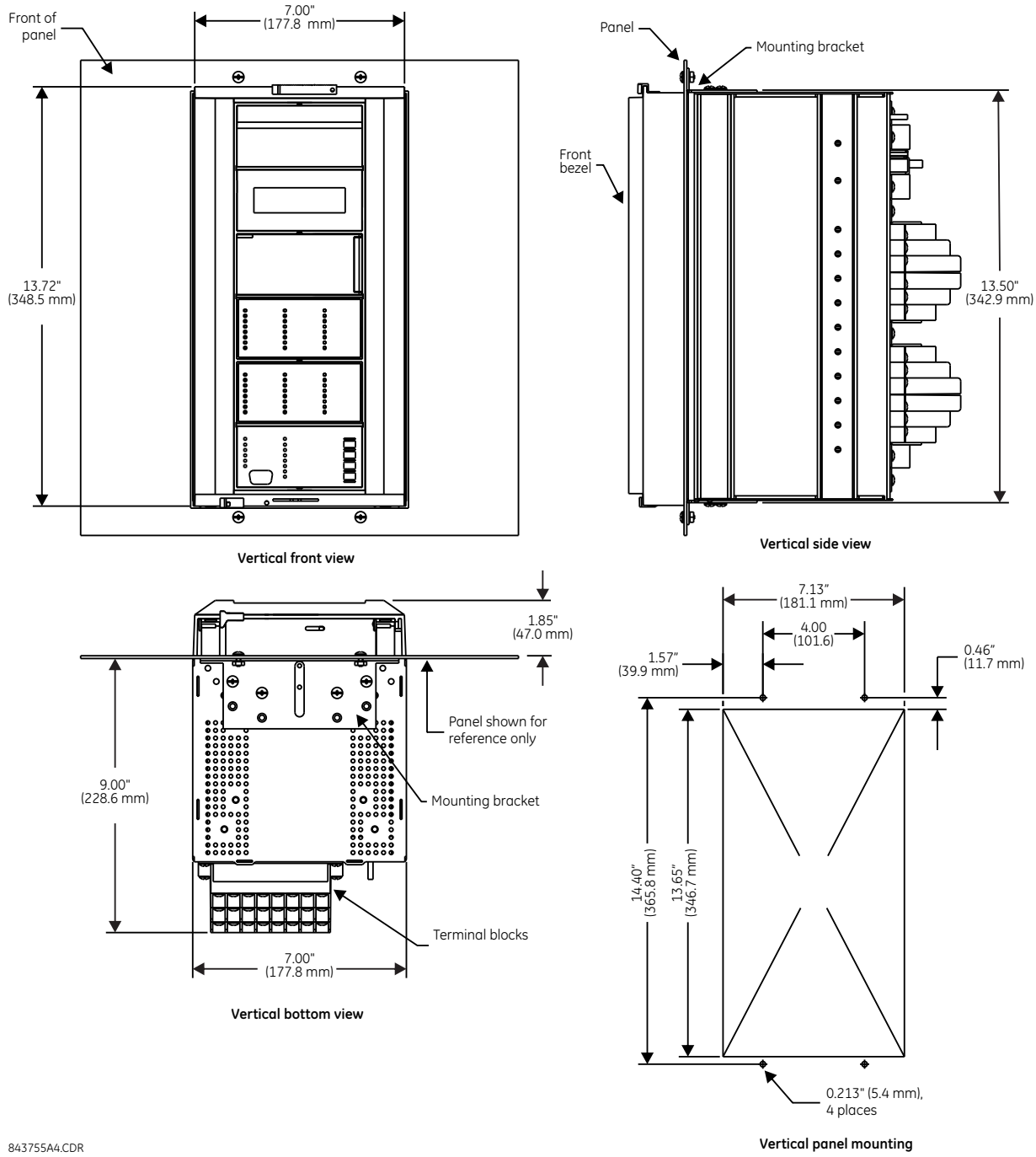

Figure 3–6: G60 VERTICAL MOUNTING AND DIMENSIONS (BASIC PANEL)

For side mounting G60 devices with the enhanced front panel, see the following documents available on the UR DVD and the GE Grid Solutions website:

- GEK-113180: UR-Series UR-V Side-Mounting Front Panel Assembly Instructions
- GEK-113181: Connecting a Remote UR-V Enhanced Front Panel to a Vertical UR Device Instruction Sheet
- GEK-113182: Connecting a Remote UR-V Enhanced Front Panel to a Vertically-Mounted Horizontal UR Device Instruction Sheet

For side mounting G60 devices with the basic front panel, use the following figures.

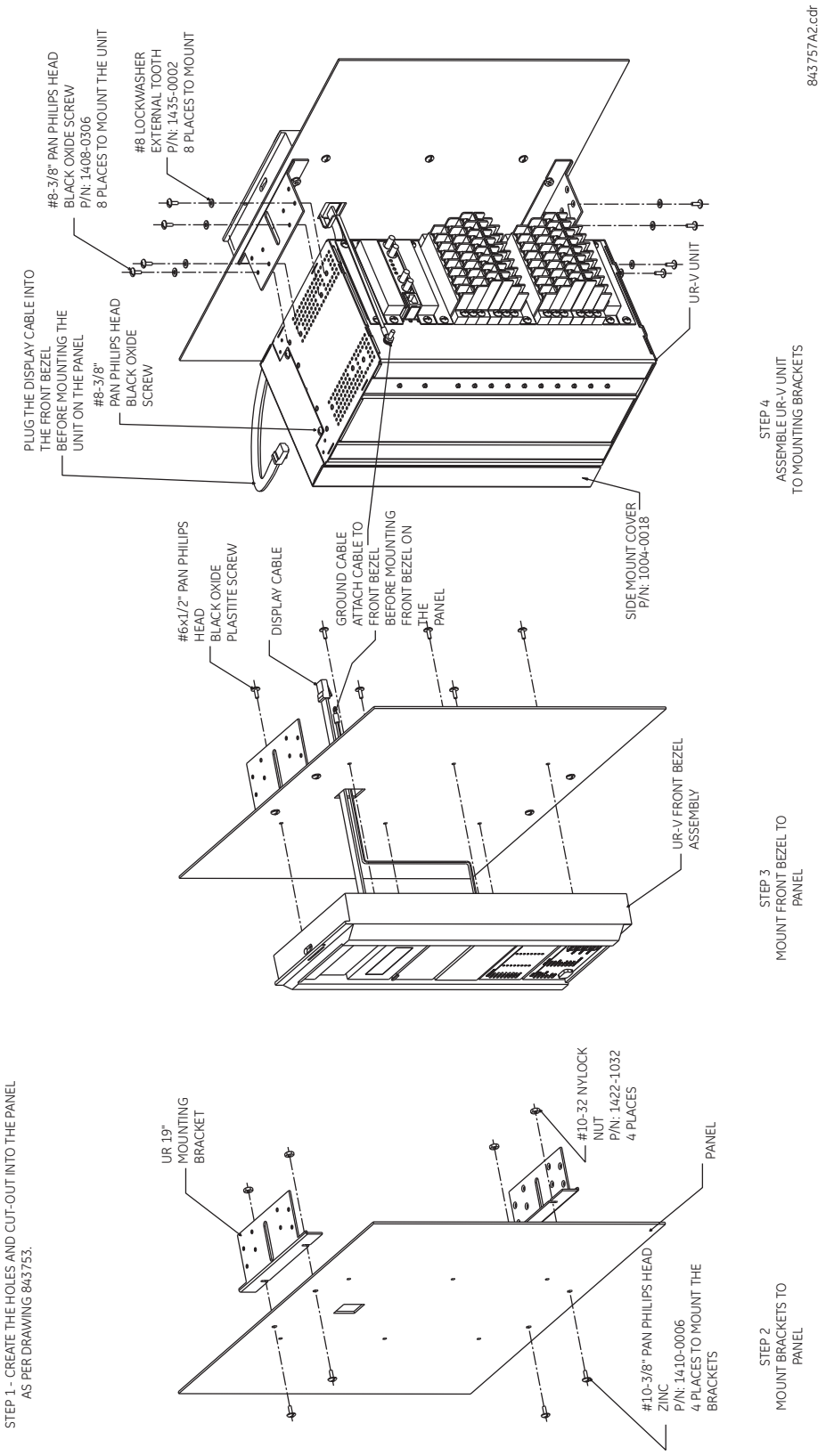

Figure 3–7: G60 VERTICAL SIDE MOUNTING INSTALLATION (BASIC PANEL)

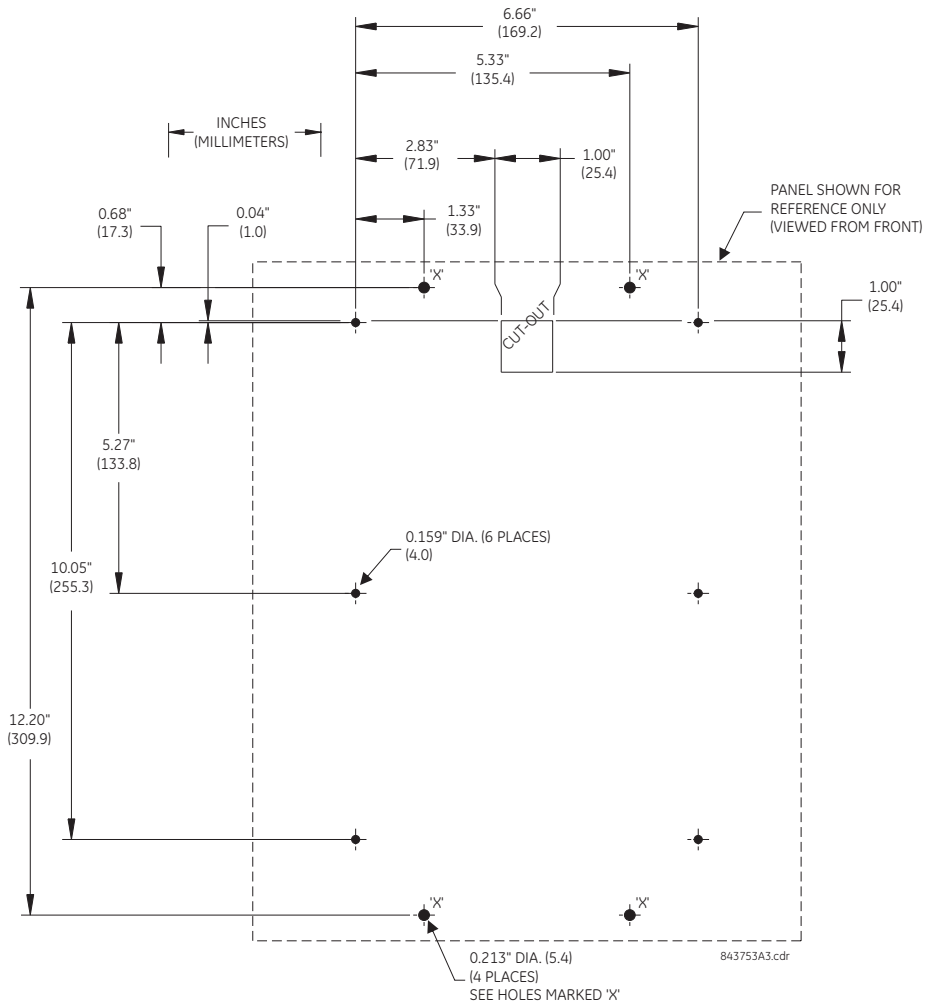

Figure 3–8: G60 VERTICAL SIDE MOUNTING REAR DIMENSIONS (BASIC PANEL)

3.1.2 MODULE WITHDRAWAL AND INSERTION

⚠WARNING **Withdraw or insert a module only when control power has been removed from the unit, and be sure to insert only the correct module type into a slot, else personal injury, damage to the unit or connected equipment, or undesired operation can result.**

NOTICE To avoid damage to the equipment, use proper electrostatic discharge protection (for example, a static strap) when coming in contact with modules while the relay is energized.

The relay, being modular in design, allows for the withdrawal and insertion of modules. Modules must only be replaced with like modules in their original factory configured slots.

The enhanced faceplate can be opened to the left, once the thumb screw has been removed, as shown below. This allows for easy accessibility of the modules for withdrawal. The new wide-angle hinge assembly in the enhanced front panel opens completely and allows easy access to all modules in the G60.

842812A1.CDR

Figure 3–9: UR MODULE WITHDRAWAL AND INSERTION (ENHANCED FACEPLATE)

The basic faceplate can be opened to the left, once the sliding latch on the right side has been pushed up, as shown below. This allows for easy accessibility of the modules for withdrawal.

842760A1.CDR

Figure 3–10: UR MODULE WITHDRAWAL AND INSERTION (BASIC FACEPLATE)

To properly remove a module, the ejector/inserter clips, located at the top and bottom of each module, must be pulled simultaneously. Before performing this action, **control power must be removed from the relay**. Record the original location of the module to ensure that the same or replacement module is inserted into the correct slot. While modules with current input provide automatic shorting of external CT circuits, for CT/VT modules it is recommended to short/isolate external circuits accordingly for maximum safety.

To properly insert a module, ensure that the **correct** module type is inserted into the **correct** slot position. The ejector/inserter clips located at the top and at the bottom of each module must be in the disengaged position as the module is smoothly inserted into the slot. Once the clips have cleared the raised edge of the chassis, engage the clips simultaneously. When the clips have locked into position, the module will be fully inserted.

NOTE

CPU connections must be individually disconnected from the module before the module can be removed from the chassis.

NOTE

The new CT/VT modules can only be used with new CPUs; similarly, old CT/VT modules can only be used with old CPUs. In the event that there is a mismatch between the CPU and CT/VT module, the relay does not function and a **DSP ERROR** or **HARDWARE MISMATCH** error displays.

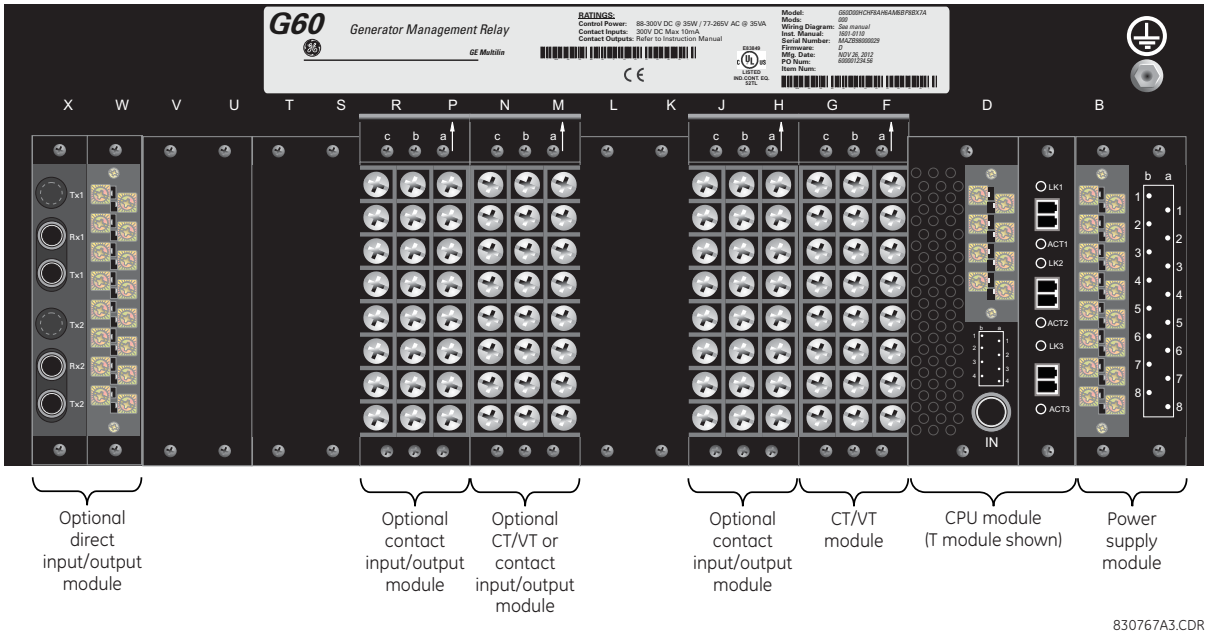

Figure 3–11: REAR TERMINAL VIEW

WARNING

Do not touch any rear terminals while the relay is energized.

NOTICE

The small form-factor pluggable ports (SFPs) are pluggable transceivers. Do not use non-validated transceivers or install validated transceivers in the wrong Ethernet slot, else damage can occur.

The relay follows a convention with respect to terminal number assignments which are three characters long assigned in order by module slot position, row number, and column letter. Two-slot wide modules take their slot designation from the first slot position (nearest to CPU module) which is indicated by an arrow marker on the terminal block. See the following figure for an example of rear terminal assignments.

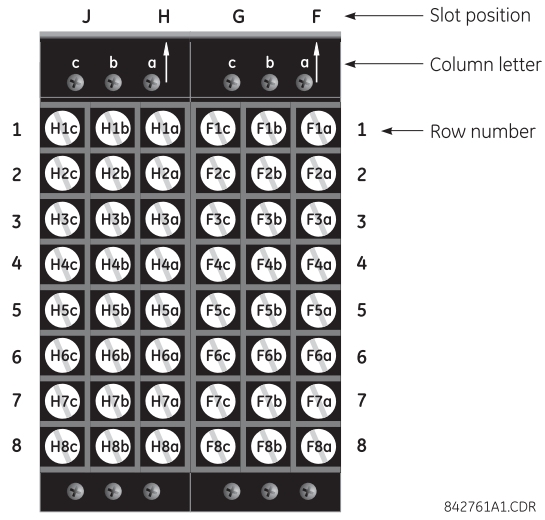

Figure 3–12: EXAMPLE OF MODULES IN F AND H SLOTS

The torque used to connect the terminal blocks to the back of the relay chassis (screws a, b, c shown) is 9 inch-pounds. For the connections to the terminal blocks (rows 1 to 8), use a minimum of 17 inch-pounds. During manufacturing, the power supply and CPU modules are installed in slots B and D of the chassis with 13 inch-pounds of torque on the screws at the top and bottom of the modules.

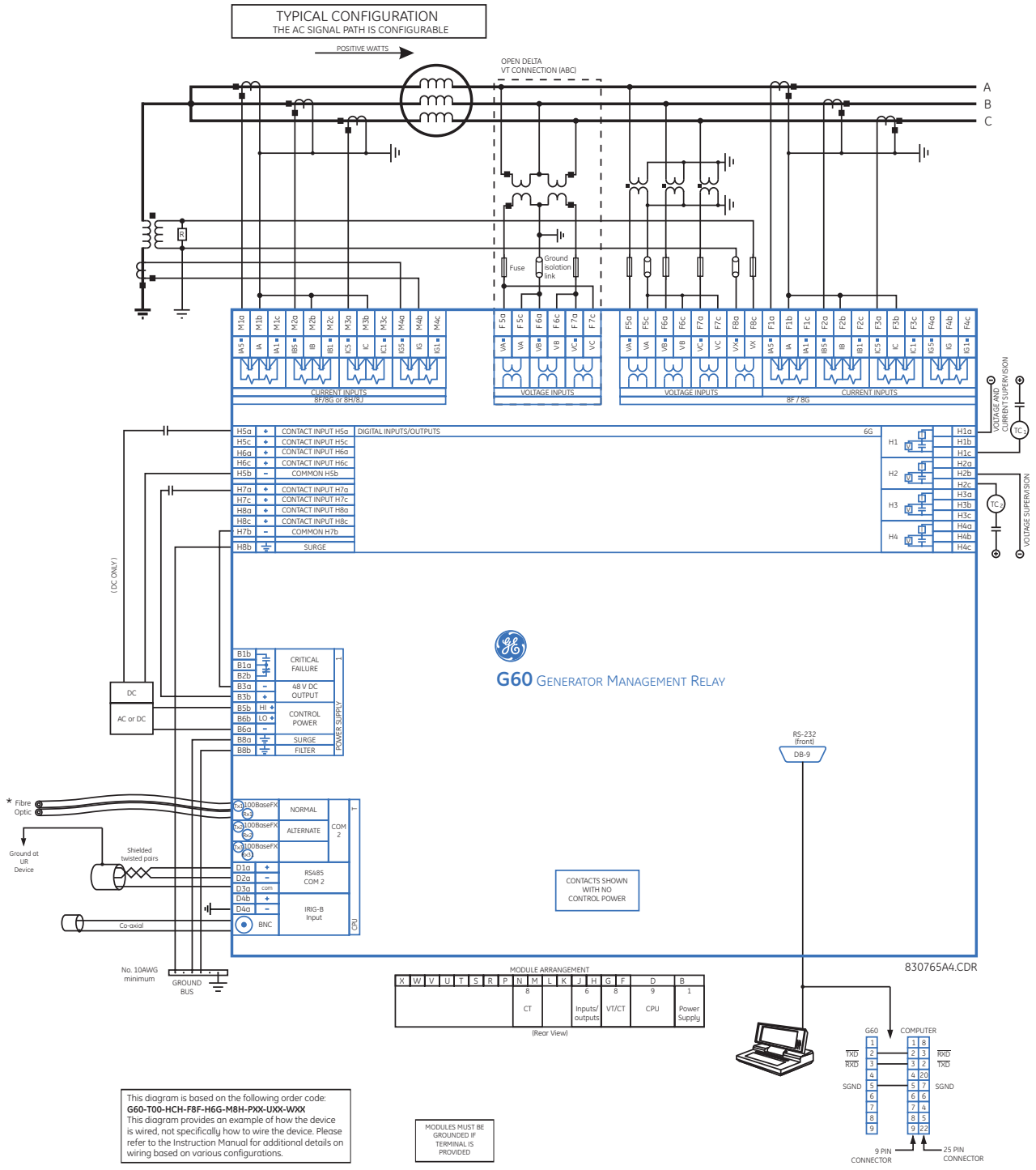

Figure 3–13: TYPICAL WIRING DIAGRAM (T MODULE SHOWN FOR CPU)

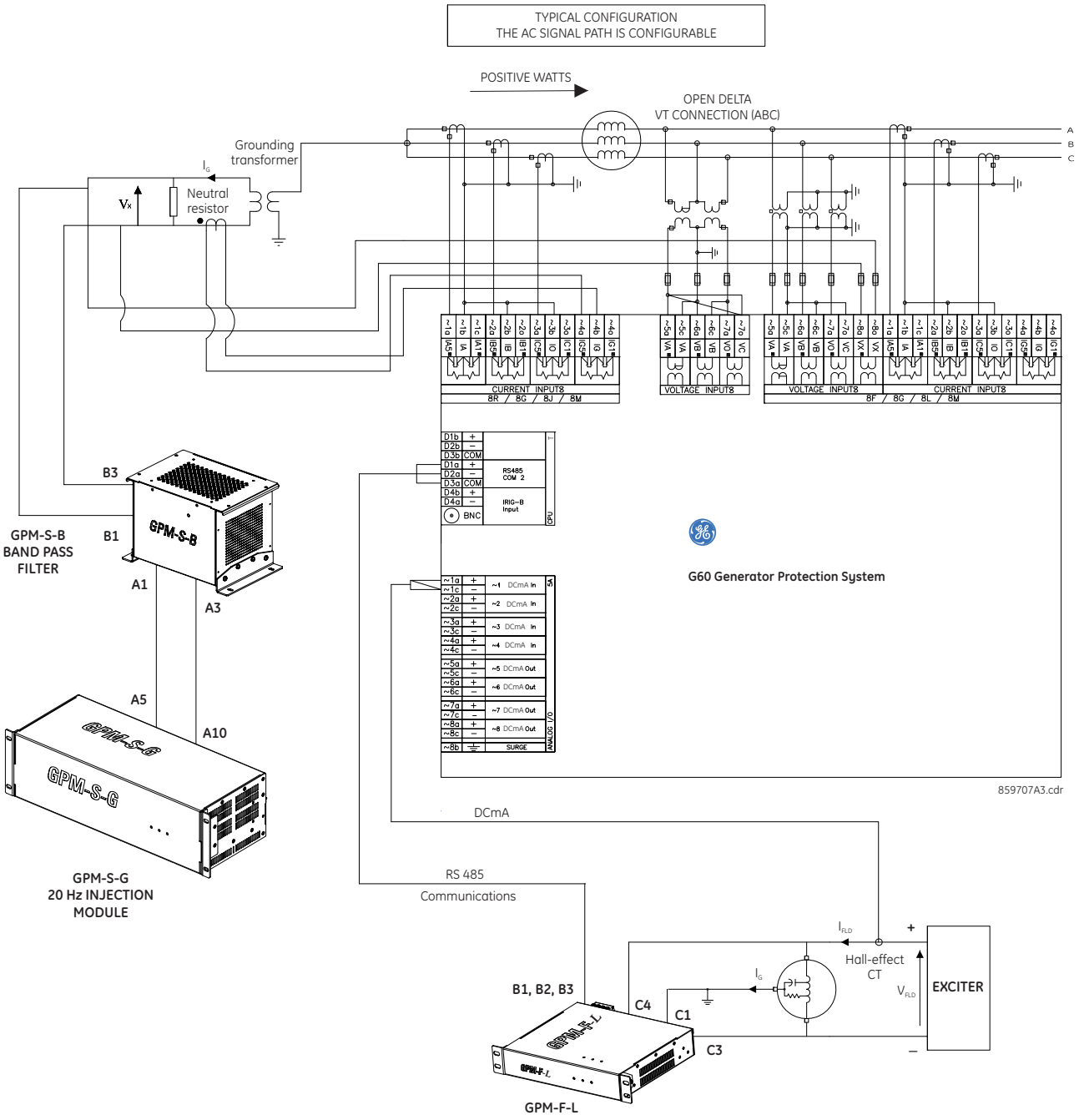

Figure 3–14: TYPICAL WIRING WITH GPM-F AND GPM-S MODULES (T MODULE SHOWN FOR CPU)

3.2.2 DIELECTRIC STRENGTH

The dielectric strength of the UR-series module hardware is shown in the following table:

Table 3–1: DIELECTRIC STRENGTH OF UR-SERIES MODULE HARDWARE

MODULE TYPE	MODULE FUNCTION	TERMINALS		DIELECTRIC STRENGTH (AC)
		FROM	TO	
1	Power supply	High (+); Low (+); (–)	Chassis	2000 V AC for 1 minute
1	Power supply	48 V DC (+) and (–)	Chassis	2000 V AC for 1 minute
1	Power supply	Relay terminals except terminals 8a and 8b	Chassis	2000 V AC for 1 minute
2	Reserved	N/A	N/A	N/A
3	Reserved	N/A	N/A	N/A
4	Digital contact inputs/ outputs	All	Chassis	2000 V AC for 1 minute
5	Analog inputs/outputs	All except 8b	Chassis	< 50 V DC
6	Digital contact inputs/ outputs	All	Chassis	2000 V AC for 1 minute
7	G.703	All except 2b, 3a, 7b, 8a	Chassis	2000 V AC for 1 minute
	RS422	All except 6a, 7b, 8a	Chassis	< 50 V DC
8	CT/VT	All	Chassis	2000 V AC for 1 minute
9	CPU	All	Chassis	2000 V AC for 1 minute

NOTICE

Filter networks and transient protection clamps are used in the hardware to prevent damage caused by high peak voltage transients, radio frequency interference (RFI), and electromagnetic interference (EMI). These protective components can be damaged by application of the ANSI/IEEE C37.90 specified test voltage for a period longer than the specified one minute.

3.2.3 CONTROL POWER

NOTICE

Control power supplied to the relay must be connected to the matching power supply range of the relay. If voltage is applied to the wrong terminals, damage can occur.

The G60 relay, like almost all electronic relays, contains electrolytic capacitors. These capacitors are well-known to deteriorate over time if voltage is not applied periodically. Deterioration can be avoided by powering up the relay at least once a year.

The power supply module can be ordered for two possible voltage ranges, and the UR can be ordered with or without a redundant power supply module option. Each range has a dedicated input connection for proper operation. The ranges are as shown below (see the Specifications section of chapter 2 for details):

- Low (LO) range: 24 to 48 V (DC only) nominal.
- High (HI) range: 125 to 250 V nominal.

The power supply module provides power to the relay and supplies power for dry contact input connections.

The power supply module provides 48 V DC power for dry contact input connections and a critical failure relay (see the Typical Wiring Diagram earlier). The critical failure relay is a form-C device that is energized once control power is applied and the relay has successfully booted up with no critical self-test failures. If on-going self-test diagnostic checks detect a critical failure (see the Self-Test Errors section in chapter 7) or control power is lost, the relay is de-energize.

For high reliability systems, the G60 has a redundant option in which two G60 power supplies are placed in parallel on the bus. If one of the power supplies become faulted, the second power supply assumes the full load of the relay without any interruptions. Each power supply has a green LED on the front of the module to indicate it is functional. The critical fail relay of the module also indicates a faulted power supply.

An LED on the front of the control power module shows the status of the power supply:

LED INDICATION	POWER SUPPLY
CONTINUOUS ON	OK
ON / OFF CYCLING	Failure
OFF	Failure

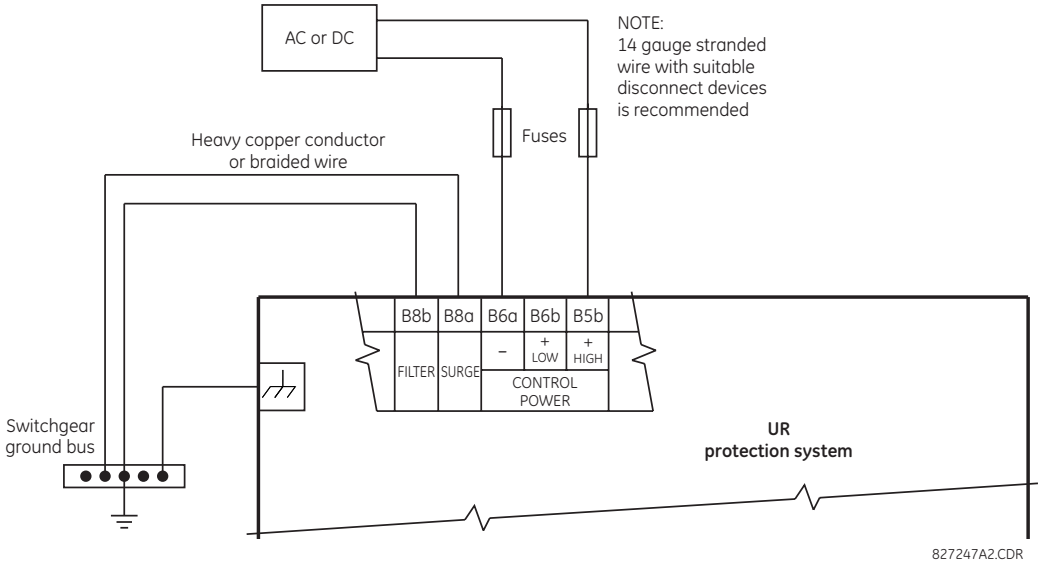

Figure 3–15: CONTROL POWER CONNECTION

a) NON-VOLATILE DATA STORAGE

Non-volatile data is temporary data required after a power cycle for relay state, such as latch status before reboot. The relay saves this data in non-volatile storage every two minutes or when a state change occurs.

If a state change occurs just before a power down (less than two minutes) and the relay power is cycled, some temporary data can be saved and the prior state is retained at power up. Otherwise, a two-minute powered on period after a state change ensures that all temporary state changes required after reboot have been saved. A command also is available to initiate saving of data in the compact flash memory using **Commands > Relay Maintenance > Save Volatile Data**.

3.2.4 CT/VT MODULES

A CT/VT module can have voltage or current inputs on channels 1 through 4 inclusive, or channels 5 through 8 inclusive. Channels 1 and 5 are intended for connection to phase A, and are labeled as such in the relay. Likewise, channels 2 and 6 are intended for connection to phase B, and channels 3 and 7 are intended for connection to phase C.

Channels 4 and 8 are intended for connection to a single-phase source. For voltage inputs, these channel are labelled as auxiliary voltage (VX). For current inputs, these channels are intended for connection to a CT between system neutral and ground, and are labelled as ground current (IG).

NOTICE Verify that the connection made to the relay terminals for nominal current of 1 A or 5 A matches the secondary rating of the connected CTs. Unmatched CTs can result in equipment damage or inadequate protection.

To connect the module, size 12 American Wire Gauge (AWG) is commonly used; the maximum size is 10 AWG.

CT/VT modules can be ordered with a standard ground current input that is the same as the phase current input. Each AC current input has an isolating transformer and an automatic shorting mechanism that shorts the input when the module is withdrawn from the chassis. There are no internal ground connections on the current inputs. Current transformers with 1 to 50000 A primaries and 1 A or 5 A secondaries can be used.

CT/VT modules with a sensitive ground input are also available. The ground CT input of the sensitive ground modules is 10 times more sensitive than the ground CT input of standard CT/VT modules. However, the phase CT inputs and phase VT inputs are the same as those of regular CT/VT modules.

The above modules have enhanced diagnostics that can automatically detect CT/VT hardware failure and take the relay out of service.

CT connections for both ABC and ACB phase rotations are identical as shown in the Typical Wiring Diagram.

The exact placement of a zero-sequence core balance CT to detect ground fault current is shown as follows. Twisted-pair cabling on the zero-sequence CT is recommended.

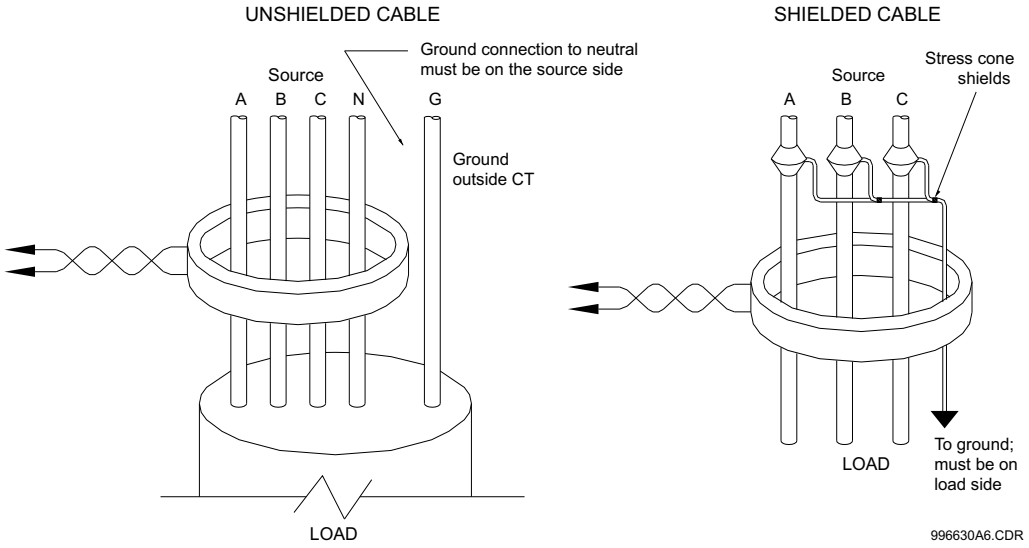

Figure 3–16: ZERO-SEQUENCE CORE BALANCE CT INSTALLATION

The phase voltage channels are used for most metering and protection purposes. The auxiliary voltage channel is used as input for the synchrocheck and volts-per-hertz features.

NOTE

Substitute the tilde "~" symbol with the slot position of the module in the following figure.

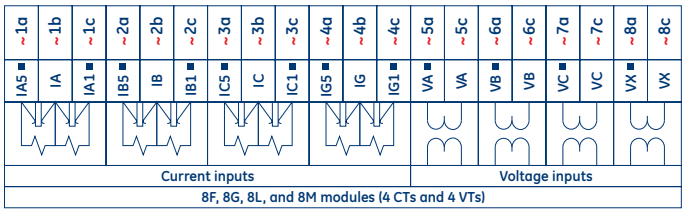

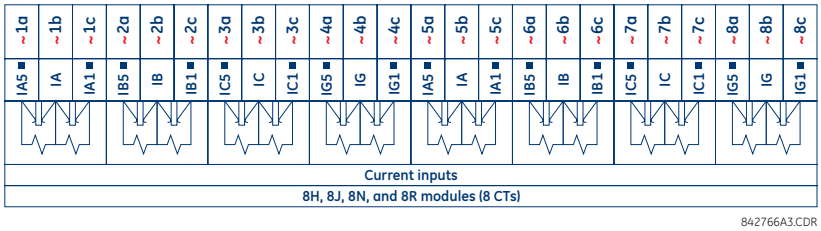

Figure 3–17: CT/VT MODULE WIRING

3.2.5 PROCESS BUS MODULES

The G60 can be ordered with a process bus interface module. This module is designed to interface with the GE Multilin HardFiber system, allowing bidirectional IEC 61850 fiber optic communications with up to eight HardFiber merging units, known as Bricks. The HardFiber system has been designed to integrate seamlessly with the existing UR-series applications, including protection functions, FlexLogic, metering, and communications.

The IEC 61850 process bus system offers the following benefits:

- Reduces labor associated with design, installation, and testing of protection and control applications using the G60 by reducing the number of individual copper terminations
- Integrates seamlessly with existing G60 applications, since the IEC 61850 process bus interface module replaces the traditional CT/VT modules
- Communicates using open standard IEC 61850 messaging

For additional details on the HardFiber system, see GE publication GEK-113658: HardFiber Process Bus System Instruction Manual.

3.2.6 CONTACT INPUTS AND OUTPUTS

Every contact input/output module has 24 terminal connections. They are arranged as three terminals per row, with eight rows in total. A given row of three terminals can be used for the outputs of one relay. For example, for form-C relay outputs, the terminals connect to the normally open (NO), normally closed (NC), and common contacts of the relay. For a form-A output, there are options of using current or voltage detection for feature supervision, depending on the module ordered. The terminal configuration for contact inputs is different for the two applications.

The contact inputs are grouped with a common return. The input/output modules have two versions of grouping: four inputs per common return and two inputs per common return. When a contact input/output module is ordered, four inputs per common is used. If the inputs must be isolated per row, then two inputs per common return should be selected (4D module).

The tables and diagrams on the following pages illustrate the module types (6A, etc.) and contact arrangements that can be ordered for the relay. Since an entire row is used for a single contact output, the name is assigned using the module slot position and row number. However, since there are two contact inputs per row, these names are assigned by module slot position, row number, and column position.

Some form-A / solid-state relay outputs include circuits to monitor the DC voltage across the output contact when it is open, and the DC current through the output contact when it is closed. Each of the monitors contains a level detector whose output is set to logic “On” when the current in the circuit is above the threshold setting. The voltage monitor is set to “On” when there is a voltage across open contact (the detector allows a current of about 1 to 2.5 mA), and the current monitor is set to “On” when the current flowing through the closed contact exceeds about 80 to 100 mA. The voltage monitor is intended to check the health of the overall trip circuit, and the current monitor can be used to seal-in the output contact until an external contact has interrupted current flow. If enabled, the current monitoring can be used as a seal-in signal to ensure that the form-A contact does not attempt to break the energized inductive coil circuit and weld the output contacts.

Block diagrams are shown as follows for form-A and solid-state relay outputs with optional voltage monitor, optional current monitor, and with no monitoring. The actual values shown for contact output 1 are the same for all contact outputs. Form-A contact output with or without a current or voltage monitoring option is not polarity sensitive. The polarity shown in the figure is required for solid-state contact output connection.

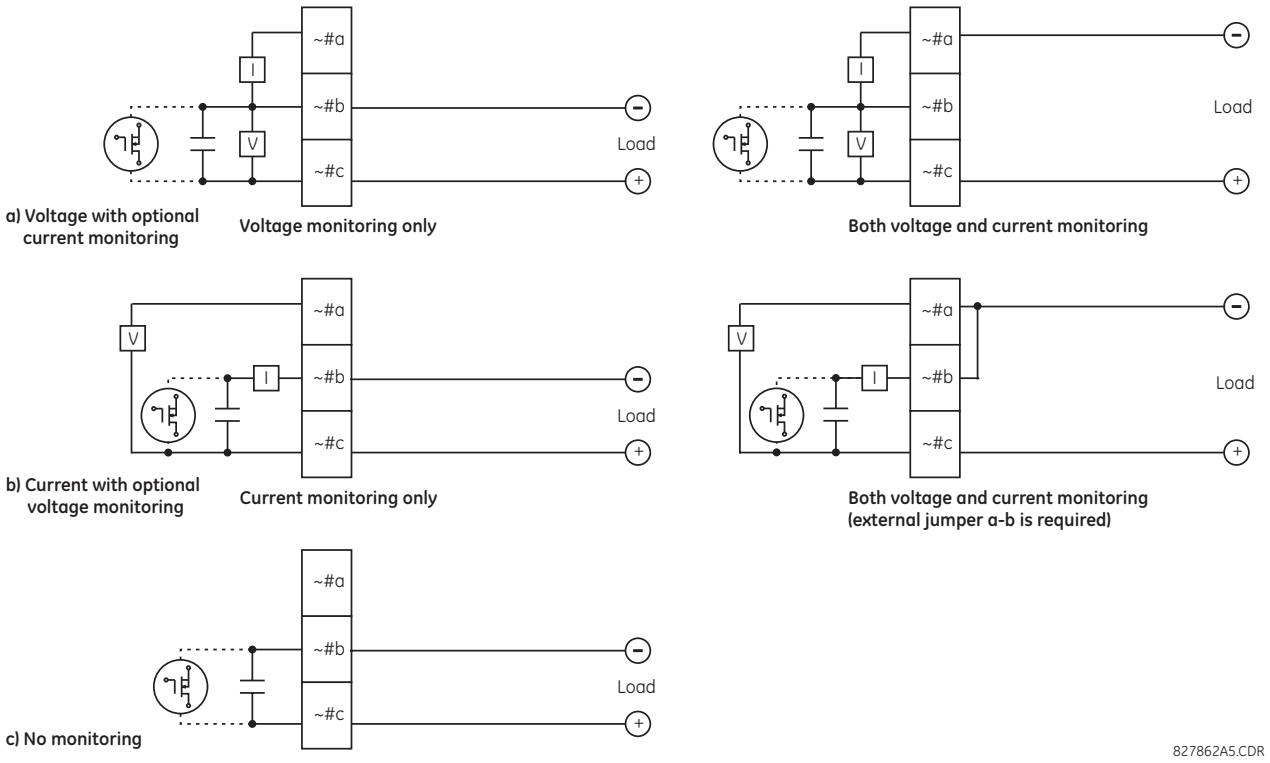

Figure 3–18: FORM-A AND SOLID-STATE CONTACT OUTPUTS WITH VOLTAGE AND CURRENT MONITORING

The operation of voltage and current monitors is reflected with the corresponding FlexLogic operands (CONT OP # VON, CONT OP # VOFF, and CONT OP # ION) which can be used in protection, control, and alarm logic. The typical application of the voltage monitor is breaker trip circuit integrity monitoring; a typical application of the current monitor is seal-in of the control command.

See the Digital Elements section of chapter 5 for an example of how form-A and solid-state relay contacts can be applied for breaker trip circuit integrity monitoring.

WARNING **Consider relay contacts unsafe to touch when the unit is energized.**

NOTE **USE OF FORM-A AND SOLID-STATE RELAY OUTPUTS IN HIGH IMPEDANCE CIRCUITS**

For form-A and solid-state relay output contacts internally equipped with a voltage measuring circuit across the contact, the circuit has an impedance that can cause a problem when used in conjunction with external high input impedance monitoring equipment such as modern relay test set trigger circuits. These monitoring circuits may continue to read the form-A contact as being closed after it has closed and subsequently opened, when measured as an impedance.

The solution is to use the voltage measuring trigger input of the relay test set, and connect the form-A contact through a voltage-dropping resistor to a DC voltage source. If the 48 V DC output of the power supply is used as a source, a 500 Ω, 10 W resistor is appropriate. In this configuration, the voltage across either the form-A contact or the resistor can be used to monitor the state of the output.

NOTE Wherever a tilde "~" symbol appears, substitute with the slot position of the module; wherever a number sign "#" appears, substitute the contact number.

NOTICE When current monitoring is used to seal-in the form-A and solid-state relay contact outputs, the FlexLogic operand driving the contact output should be given a reset delay of 10 ms to prevent damage of the output contact (in situations when the element initiating the contact output is bouncing, at values in the region of the pickup value).

Table 3–2: CONTACT INPUT AND OUTPUT MODULE ASSIGNMENTS

~6A MODULE	
TERMINAL ASSIGNMENT	OUTPUT OR INPUT
~1	Form-A
~2	Form-A
~3	Form-C
~4	Form-C
~5a, ~5c	2 Inputs
~6a, ~6c	2 Inputs
~7a, ~7c	2 Inputs
~8a, ~8c	2 Inputs

~6B MODULE	
TERMINAL ASSIGNMENT	OUTPUT OR INPUT
~1	Form-A
~2	Form-A
~3	Form-C
~4	Form-C
~5	Form-C
~6	Form-C
~7a, ~7c	2 Inputs
~8a, ~8c	2 Inputs

~6C MODULE	
TERMINAL ASSIGNMENT	OUTPUT
~1	Form-C
~2	Form-C
~3	Form-C
~4	Form-C
~5	Form-C
~6	Form-C
~7	Form-C
~8	Form-C

~6D MODULE	
TERMINAL ASSIGNMENT	OUTPUT
~1a, ~1c	2 Inputs
~2a, ~2c	2 Inputs
~3a, ~3c	2 Inputs
~4a, ~4c	2 Inputs
~5a, ~5c	2 Inputs
~6a, ~6c	2 Inputs
~7a, ~7c	2 Inputs
~8a, ~8c	2 Inputs

~6E MODULE	
TERMINAL ASSIGNMENT	OUTPUT OR INPUT
~1	Form-C
~2	Form-C
~3	Form-C
~4	Form-C
~5a, ~5c	2 Inputs
~6a, ~6c	2 Inputs
~7a, ~7c	2 Inputs
~8a, ~8c	2 Inputs

~6F MODULE	
TERMINAL ASSIGNMENT	OUTPUT
~1	Fast Form-C
~2	Fast Form-C
~3	Fast Form-C
~4	Fast Form-C
~5	Fast Form-C
~6	Fast Form-C
~7	Fast Form-C
~8	Fast Form-C

~6G MODULE	
TERMINAL ASSIGNMENT	OUTPUT OR INPUT
~1	Form-A
~2	Form-A
~3	Form-A
~4	Form-A
~5a, ~5c	2 Inputs
~6a, ~6c	2 Inputs
~7a, ~7c	2 Inputs
~8a, ~8c	2 Inputs

~6H MODULE	
TERMINAL ASSIGNMENT	OUTPUT OR INPUT
~1	Form-A
~2	Form-A
~3	Form-A
~4	Form-A
~5	Form-A
~6	Form-A
~7a, ~7c	2 Inputs
~8a, ~8c	2 Inputs

~6K MODULE	
TERMINAL ASSIGNMENT	OUTPUT
~1	Form-C
~2	Form-C
~3	Form-C
~4	Form-C
~5	Fast Form-C
~6	Fast Form-C
~7	Fast Form-C
~8	Fast Form-C

~6L MODULE	
TERMINAL ASSIGNMENT	OUTPUT OR INPUT
~1	Form-A
~2	Form-A
~3	Form-C
~4	Form-C
~5a, ~5c	2 Inputs
~6a, ~6c	2 Inputs
~7a, ~7c	2 Inputs
~8a, ~8c	2 Inputs

~6M MODULE	
TERMINAL ASSIGNMENT	OUTPUT OR INPUT
~1	Form-A
~2	Form-A
~3	Form-C
~4	Form-C
~5	Form-C
~6	Form-C
~7a, ~7c	2 Inputs
~8a, ~8c	2 Inputs

~6N MODULE	
TERMINAL ASSIGNMENT	OUTPUT OR INPUT
~1	Form-A
~2	Form-A
~3	Form-A
~4	Form-A
~5a, ~5c	2 Inputs
~6a, ~6c	2 Inputs
~7a, ~7c	2 Inputs
~8a, ~8c	2 Inputs

~6P MODULE	
TERMINAL ASSIGNMENT	OUTPUT OR INPUT
~1	Form-A
~2	Form-A
~3	Form-A
~4	Form-A
~5	Form-A
~6	Form-A
~7a, ~7c	2 Inputs
~8a, ~8c	2 Inputs

~6R MODULE	
TERMINAL ASSIGNMENT	OUTPUT OR INPUT
~1	Form-A
~2	Form-A
~3	Form-C
~4	Form-C
~5a, ~5c	2 Inputs
~6a, ~6c	2 Inputs
~7a, ~7c	2 Inputs
~8a, ~8c	2 Inputs

~6S MODULE	
TERMINAL ASSIGNMENT	OUTPUT OR INPUT
~1	Form-A
~2	Form-A
~3	Form-C
~4	Form-C
~5	Form-C
~6	Form-C
~7a, ~7c	2 Inputs
~8a, ~8c	2 Inputs

~6T MODULE	
TERMINAL ASSIGNMENT	OUTPUT OR INPUT
~1	Form-A
~2	Form-A
~3	Form-A
~4	Form-A
~5a, ~5c	2 Inputs
~6a, ~6c	2 Inputs
~7a, ~7c	2 Inputs
~8a, ~8c	2 Inputs

~6U MODULE	
TERMINAL ASSIGNMENT	OUTPUT OR INPUT
~1	Form-A
~2	Form-A
~3	Form-A
~4	Form-A
~5	Form-A
~6	Form-A
~7a, ~7c	2 Inputs
~8a, ~8c	2 Inputs

~6V MODULE	
TERMINAL ASSIGNMENT	OUTPUT OR INPUT
~1	Form-A
~2	Form-A
~3	Form-C
~4	2 Outputs
~5a, ~5c	2 Inputs
~6a, ~6c	2 Inputs
~7a, ~7c	2 Inputs
~8a, ~8c	2 Inputs

~67 MODULE	
TERMINAL ASSIGNMENT	OUTPUT
~1	Form-A
~2	Form-A
~3	Form-A
~4	Form-A
~5	Form-A
~6	Form-A
~7	Form-A
~8	Form-A

~4A MODULE	
TERMINAL ASSIGNMENT	OUTPUT
~1	Not Used
~2	Solid-State
~3	Not Used
~4	Solid-State
~5	Not Used
~6	Solid-State
~7	Not Used
~8	Solid-State

~4B MODULE	
TERMINAL ASSIGNMENT	OUTPUT
~1	Not Used
~2	Solid-State
~3	Not Used
~4	Solid-State
~5	Not Used
~6	Solid-State
~7	Not Used
~8	Solid-State

~4C MODULE	
TERMINAL ASSIGNMENT	OUTPUT
~1	Not Used
~2	Solid-State
~3	Not Used
~4	Solid-State
~5	Not Used
~6	Solid-State
~7	Not Used
~8	Solid-State

~4D MODULE	
TERMINAL ASSIGNMENT	OUTPUT
~1a, ~1c	2 Inputs
~2a, ~2c	2 Inputs
~3a, ~3c	2 Inputs
~4a, ~4c	2 Inputs
~5a, ~5c	2 Inputs
~6a, ~6c	2 Inputs
~7a, ~7c	2 Inputs
~8a, ~8c	2 Inputs

~4L MODULE	
TERMINAL ASSIGNMENT	OUTPUT
~1	2 Outputs
~2	2 Outputs
~3	2 Outputs
~4	2 Outputs
~5	2 Outputs
~6	2 Outputs
~7	2 Outputs
~8	Not Used

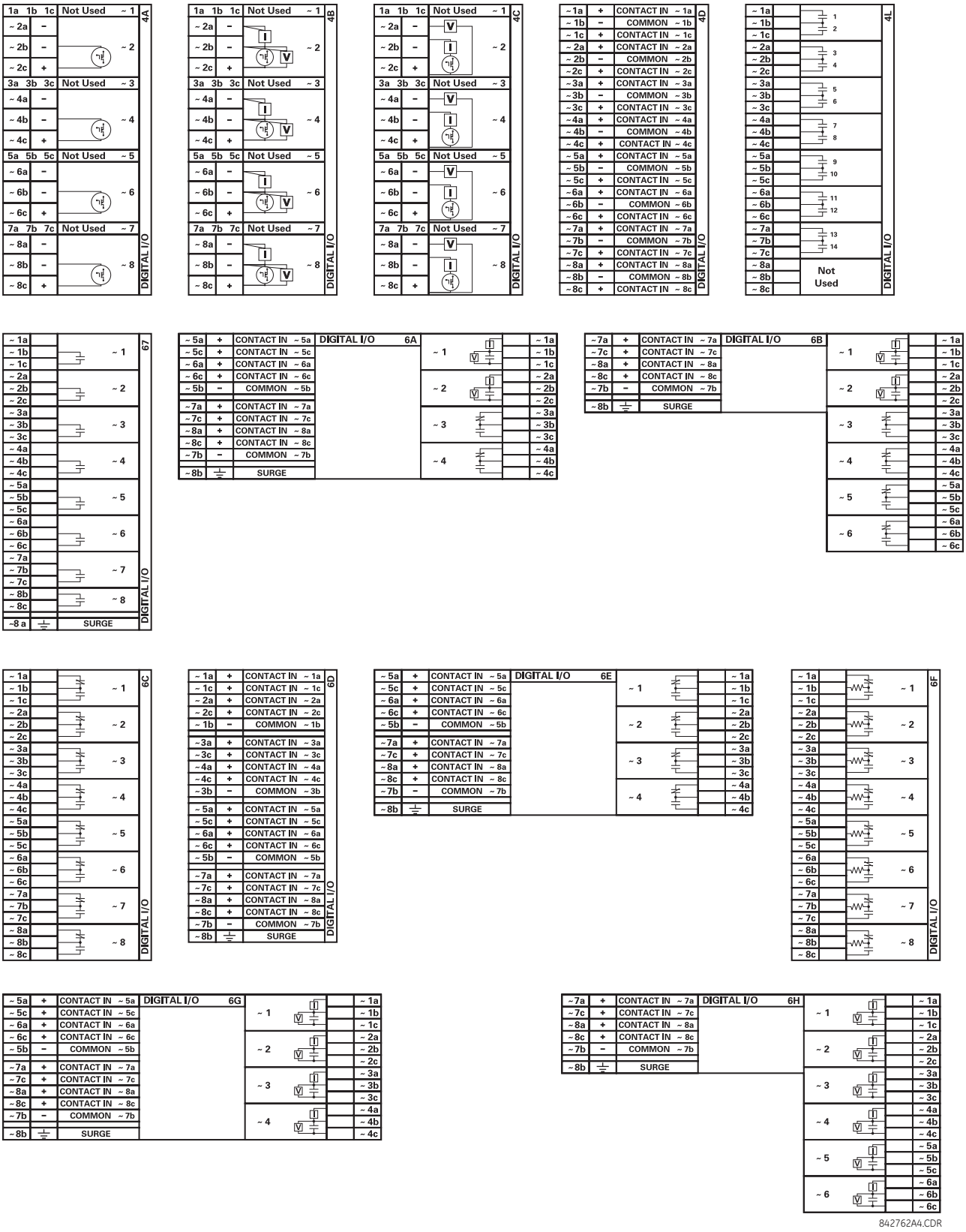

Figure 3–19: CONTACT INPUT AND OUTPUT MODULE WIRING (1 of 2)

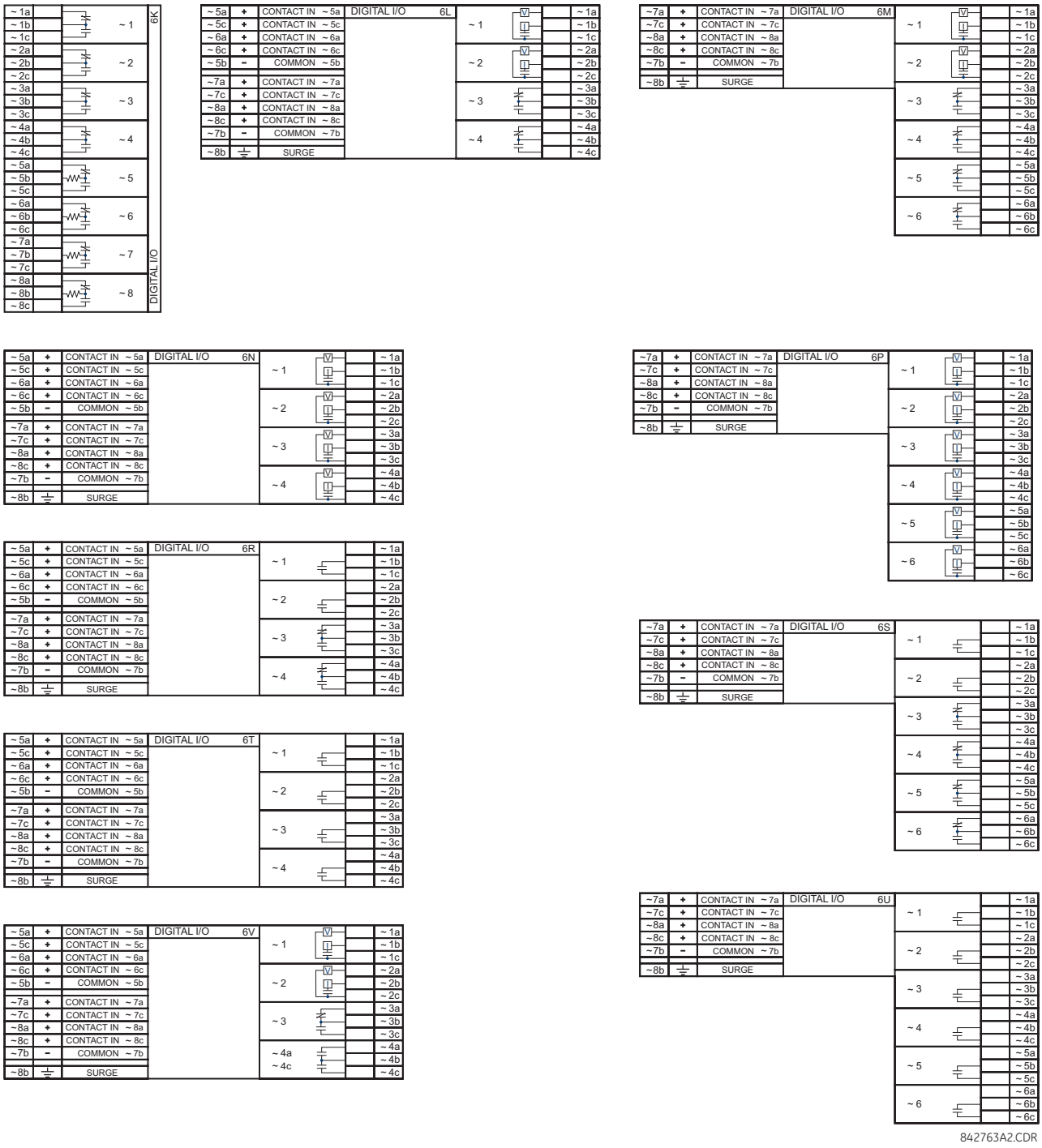

Figure 3–20: CONTACT INPUT AND OUTPUT MODULE WIRING (2 of 2)

NOTICE For proper functionality, observe the polarity shown in the figures for all contact input and output connections.

CONTACT INPUTS

A dry contact has one side connected to terminal B3b. This is the positive 48 V DC voltage rail supplied by the power supply module. The other side of the dry contact is connected to the required contact input terminal. Each contact input group has its own common (negative) terminal which must be connected to the DC negative terminal (B3a) of the power supply module. When a dry contact closes, a current of 1 to 3 mA flows through the associated circuit.

A wet contact has one side connected to the positive terminal of an external DC power supply. The other side of this contact is connected to the required contact input terminal. If a wet contact is used, then the negative side of the external source must be connected to the relay common (negative) terminal of each contact group. The maximum external source voltage for this arrangement is 300 V DC.

The voltage threshold at which each group of four contact inputs detects a closed contact input is programmable as 17 V DC for 24 V sources, 33 V DC for 48 V sources, 84 V DC for 110 to 125 V sources, and 166 V DC for 250 V sources.

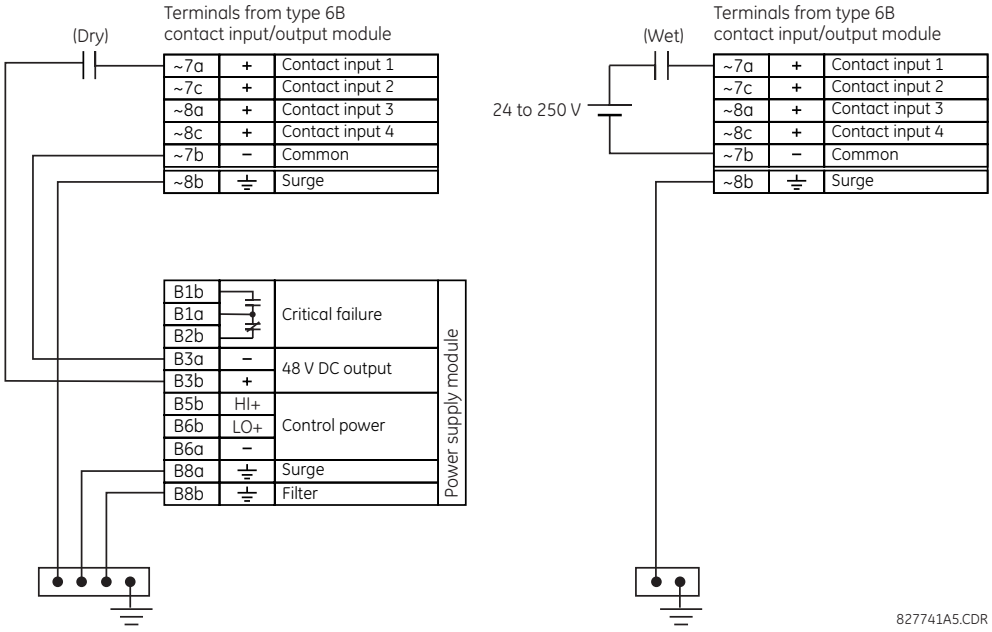

Figure 3–21: DRY AND WET CONTACT INPUT CONNECTIONS

NOTE

Wherever a tilde "~" symbol appears, substitute with the slot position of the module.

There is no provision in the relay to detect a DC ground fault on 48 V DC control power external output. We recommend using an external DC supply.

GENERAL APPLICATION CONSIDERATIONS

Contacts outputs of protective relays, auxiliary contacts from breakers, disconnectors and other devices, are generally connected to contacts inputs of protective relays. In some situations, the contact outputs of some protective relays can have high impedance connected across it. When such a contact output is connected across a G60 contact input, it can spuriously operate the G60 input even when the output is open, if there is a substantial distributed capacitance (represented by C1) present in the wiring between the output and the G60 input and the debounce time setting in the G60 relay is low enough. This false assertion of the contact input, when there is inadvertent ground present at the DC positive terminal, can be prevented by inserting a resistor across the G60 input.

The following figure shows a typical DC circuit, with battery ground detection, of contact input. The contact output has parallel impedance across it (represented by R1).

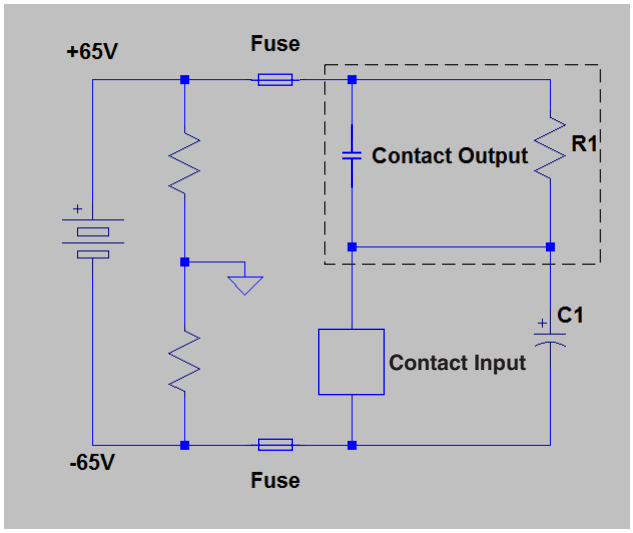

Figure 3–22: TYPICAL CONTACT INPUT DC CIRCUIT

The presence of the impedance path (R1) across the contact output allows the stray (distributed) capacitance C1 to charge as shown, thus developing a voltage across the contact input enough to momentarily operate the input while the capacitance discharges in the presence of DC ground on the positive terminal of the battery.

The duration of the discharge depends on the value of the distributed capacitance, the initial voltage of the distributed capacitance, and the input impedance of the contact input. If the duration is greater than the debounce time setting, then the contact input operates.

The application example that follows describes how to mitigate this problem by connecting a resistor across the contact input, as shown in the next figure, or by adjusting the debounce time setting to a value greater than the discharge time to prevent spurious operation of the contact input only if the voltage (with output open) across the contact input due to trickle current is less than the threshold voltage. This operation of contact inputs also can be prevented by using the Auto-Burnish contact inputs or contact inputs with active impedance.

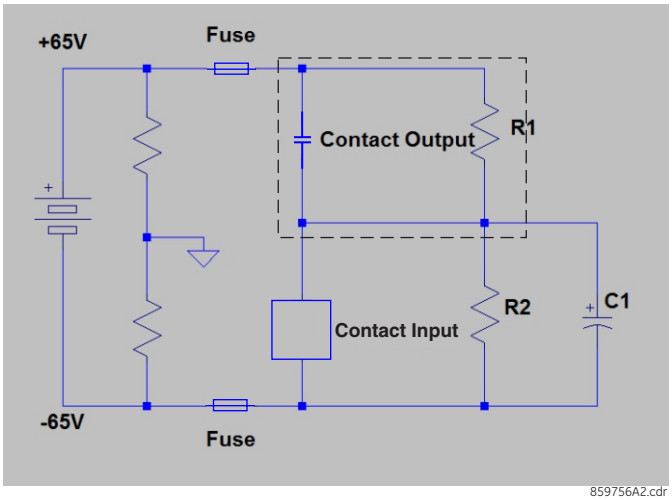

Figure 3–23: CONTACT INPUT CONNECTED TO A CONTACT OUTPUT WITH RESISTOR (R2) ACROSS THE INPUT

APPLICATION EXAMPLE

This example is for illustrative purposes only and the calculations present the worst-case scenario. In practice, the value of debounce time can be lower.

Contact input ON state impedance used in the calculation of the discharge period is based on the following table.

Table 3–3: DISCHARGE PERIOD

BATTERY VOLTAGE (V)	INPUT IMPEDANCE (KΩ)
130	50
250	97

Debounce time setting = 2 ms

Assume a stray capacitance of 0.1 µF.

Assume an initial voltage across the stray capacitance "Vinitial" = 19 V (Vthreshold - 65 V), where Vthreshold = 84 V. The initial voltage Vinitial depends on values of impedance of R1 and contact inputs when the contact input is OFF (non-activated state).

Therefore, discharge time constant (τ) =50 kΩ *0.1 µF = 5 ms.

Discharge period t is calculated from the following equation:

$$Vthreshold = (Vbatt - VInitial) *e^{(-t/\tau)}$$

$$84 = -149 *e^{(t/0.005)} \quad \textbf{(EQ 3.1)}$$

$$T = -0.005 * \ln (84/149) = 0.0029 \text{ s}$$

Therefore, in this example the contact inputs operate.

To prevent this operation, the debounce time must be increased to 4 ms (set debounce time as per the following table) or insert a resistor less than or equal to "R" as calculated later.

Table 3–4: TYPICAL DEBOUNCE TIME SETTING

STRAY CAPACITANCE (µF)	BATTERY VOLTAGE (V)	DEBOUNCE TIME (MS)
0.05	130	2
0.1	130	4
0.2	130	6
0.05	250	3
0.1	250	6
0.2	250	11

The value of this resistor "R" is calculated as follows:

1. Determine the minimum voltage (V threshold) required to turn on the input. This is determined by direct measurement or referenced in the input specifications.
2. Calculate the resistance necessary to limit the voltage to 1/3 V threshold (when the contact is OFF, the non-activated state) as follows:

   $$R = (Vthreshold / 3) / (2 \text{ mA}) \quad \textbf{(EQ 3.2)}$$

   The 2 mA current is used in case the contact input is connected across the GE Form A contact output with voltage monitoring. Otherwise use the amperage of the active circuit connected to the contact input when its contact output is open and the voltage across the contact input is third trigger threshold to calculate the resistor value.
3. When the contact is ON (operate state), the battery voltage appears across the resistor. The wattage rating of the resistor is then:

   $$PR = 1.3 * (Vbatt)^2 / R \text{ Watts} \quad \textbf{(EQ 3.3)}$$
4. Applying the following equation to our example:

   $$R = 84 \text{ V} / 3*(1 / 2 \text{ mA}) = 14 \text{ k}\Omega$$

   $$PR = 1.57 \text{ Watts} \quad \textbf{(EQ 3.4)}$$
5. Calculating the voltage across the contact input with the Burden Resistor, Voltage across the contact Input:

$$V_{resistor} = 2\ mA * 14\ Kohm = 28\ V$$

$$V_{resistor} < \text{contact input threshold (84 V)} \quad \textbf{(EQ 3.5)}$$

In conclusion, in this example, the contact input does NOT operate falsely with the Burden Resistor across its input AND when a battery ground is present.

USE OF CONTACT INPUTS WITH AUTO-BURNISHING

The contact inputs sense a change of the state of the external device contact based on the measured current. When external devices are located in a harsh industrial environment (either outdoor or indoor), their contacts can be exposed to various types of contamination. Normally, there is a thin film of insulating sulfidation, oxidation, or contaminates on the surface of the contacts, sometimes making it difficult or impossible to detect a change of the state. This film must be removed to establish circuit continuity – an impulse of higher than normal current can accomplish this.

The contact inputs with auto-burnish create a high current impulse when the threshold is reached to burn off this oxidation layer as a maintenance to the contacts. Afterwards the contact input current is reduced to a steady-state current. The impulse has a 5 second delay after a contact input changes state.

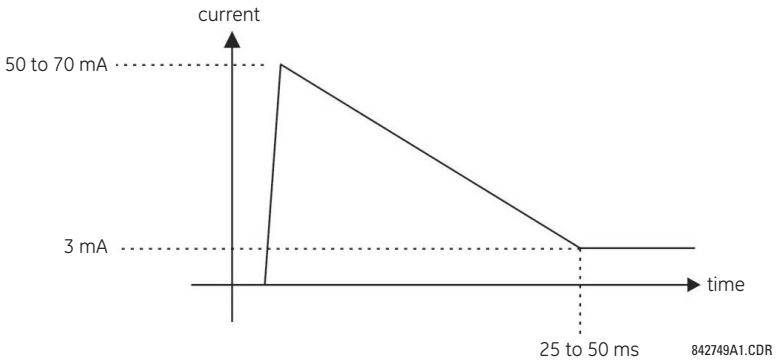

Figure 3–24: CURRENT THROUGH CONTACT INPUTS WITH AUTO-BURNISHING

Regular contact inputs limit current to less than 3 mA to reduce station battery burden. In contrast, contact inputs with auto-burnishing allow currents up to 50 to 70 mA at the first instance when the change of state was sensed. Then, within 25 to 50 ms, this current is slowly reduced to 3 mA as indicated above. The 50 to 70 mA peak current burns any film on the contacts, allowing for proper sensing of state changes. If the external device contact is bouncing, the auto-burnishing starts when external device contact bouncing is over.

Another important difference between the auto-burnishing input module and the regular input modules is that only two contact inputs have common ground, as opposed to four contact inputs sharing one common ground (refer to the Contact Input and Output Module Wiring diagrams). This is beneficial when connecting contact inputs to separate voltage sources. Consequently, the threshold voltage setting is also defined per group of two contact inputs.

The auto-burnish feature can be disabled or enabled using the DIP switches found on each daughter card. There is a DIP switch for each contact, for a total of 16 inputs.

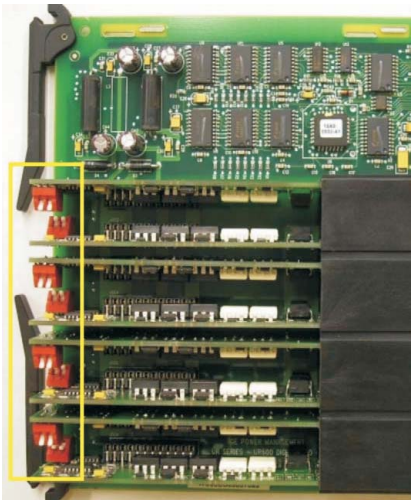

CONTACT INPUT 1 AUTO-BURNISH = OFF
CONTACT INPUT 2 AUTO-BURNISH = OFF

CONTACT INPUT 1 AUTO-BURNISH = ON
CONTACT INPUT 2 AUTO-BURNISH = OFF

CONTACT INPUT 1 AUTO-BURNISH = OFF
CONTACT INPUT 2 AUTO-BURNISH = ON

CONTACT INPUT 1 AUTO-BURNISH = ON
CONTACT INPUT 2 AUTO-BURNISH = ON

842751A1.CDR

Figure 3–25: AUTO-BURNISH DIP SWITCHES

NOTE

The auto-burnish circuitry has an internal fuse for safety purposes. During regular maintenance, check the auto-burnish functionality using an oscilloscope.

USE OF CONTACT INPUTS WITH ACTIVE IMPEDANCE

Contact inputs susceptible to parasitic capacitance caused by long cable runs affected by switching surges from external circuits can result in inadvertent activation of contact inputs with the external contact open. In this case, GE recommends using the digital I/O module with active impedance circuit.

Active impedance contact input can tolerate external cable capacitance of up to 0.2 µF, without entering the ON state for more than 2 ms. The contact input debounce time can still be set above 2 ms for added security to prevent contact input activations cause by external transient ON states.

An active impedance contact input is normally in Low impedance mode during OFF contact state (non-activated condition). During Low impedance state contact input impedance is maintained at 10 K Ohms impedance to allow fast discharge of the stray capacitance of the long cables.

When the contact input voltage exceeds the set threshold, active impedance maintains 10 K Ohms impedance value. If voltage starts rapidly decreasing, this indicates that stray capacitance is being discharged through the contact input. If, however, voltage stabilizes above the set threshold, the input impedance is switched to High impedance mode of 100 K Ohms. This value reduces the input current to <3 mA, and contact input switched to the ON state (operated state).

The figure shows the active impedance contact input V-I characteristic. Different thresholds with their corresponding characteristics are shown by color. The contact input is in the ON (operated) state if the input voltage is to the right of the colored threshold band (+/-10% tolerance), and the contact input is in the OFF (non-activated) state when input voltage is to the left of the band. A contact input is in LOW state during non-operated system condition, and actively switches to HIGH state upon detection of input voltage above the settable threshold.

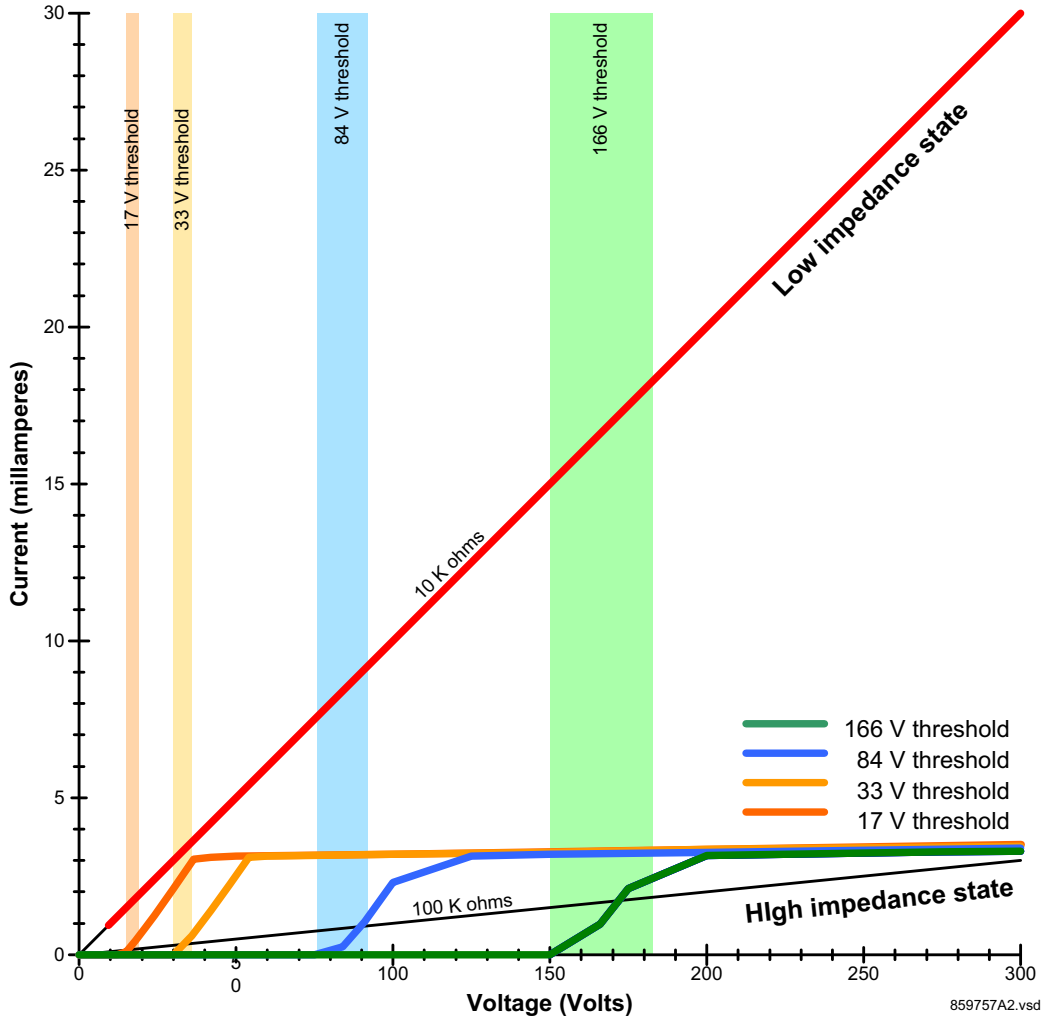

Figure 3–26: ACTIVE IMPEDANCE CONTACT INPUT V-I CHARACTERISTIC

3.2.7 TRANSDUCER INPUTS/OUTPUTS

Transducer input modules can receive input signals from external DCmA output transducers (DCmA In) or resistance temperature detectors (RTDs). Hardware and software are provided to receive signals from these external transducers and convert these signals into a digital format for use as required.

Transducer output modules provide DC current outputs in several standard DCmA ranges. Software is provided to configure virtually any analog quantity used in the relay to drive the analog outputs.

Every transducer input/output module has a total of 24 terminal connections. These connections are arranged as three terminals per row with a total of eight rows. A given row can be used for either inputs or outputs, with terminals in column "a" having positive polarity and terminals in column "c" having negative polarity. Since an entire row is used for a single input/output channel, the name of the channel is assigned using the module slot position and row number.

Each module also requires that a connection from an external ground bus be made to terminal 8b. The current outputs require a twisted-pair shielded cable, where the shield is grounded at one end only. The following figure illustrates the transducer module types (5A, 5C, 5D, 5E, and 5F) and channel arrangements that can be ordered for the relay.

NOTE

Wherever a tilde “~” symbol appears, substitute with the slot position of the module.

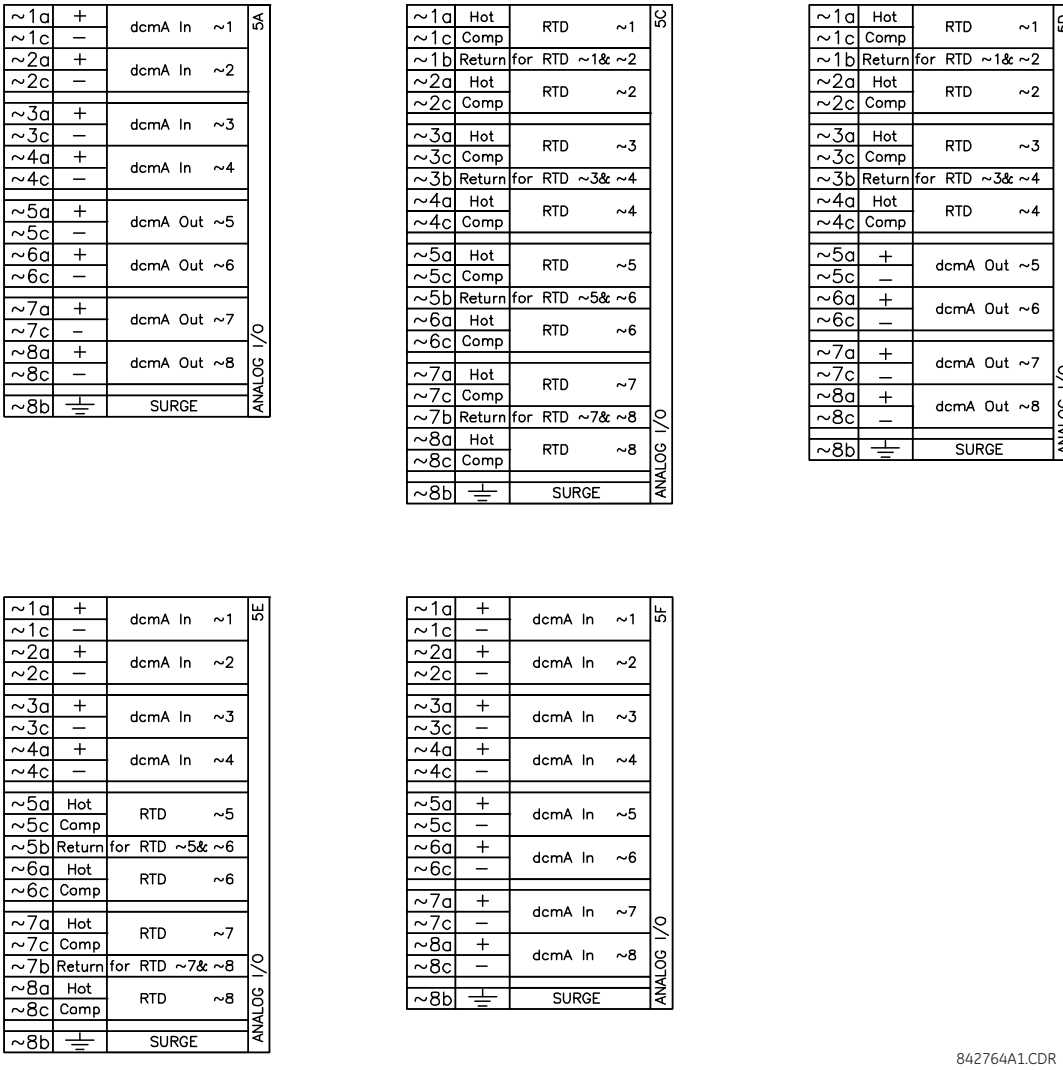

Figure 3–27: TRANSDUCER INPUT/OUTPUT MODULE WIRING

The following figure show how to connect RTDs.

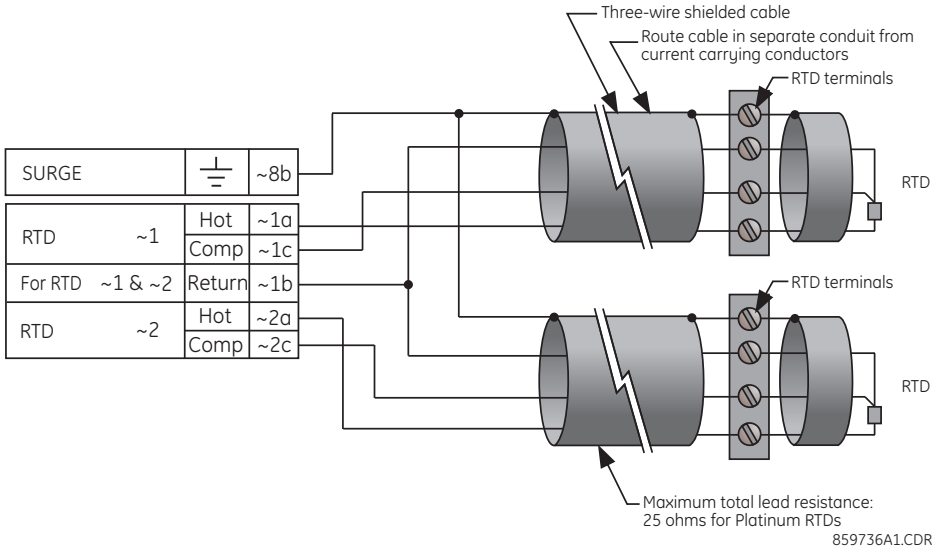

Figure 3–28: RTD CONNECTION

3.2.8 RS232 FACEPLATE PORT

A 9-pin RS232C serial port is located on the G60 faceplate for programming with a computer. All that is required to use this interface is a computer running the EnerVista UR Setup software provided with the relay. Cabling for the RS232 port is shown in the following figure for both 9-pin and 25-pin connectors.

NOTE

The baud rate for this port is fixed at 19200 bps.

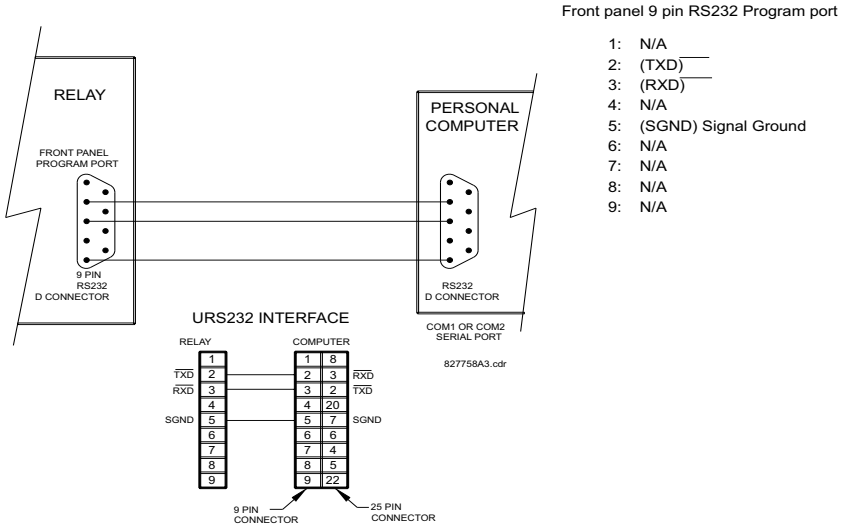

Figure 3–29: RS232 FACEPLATE PORT CONNECTION

3.2.9 CPU COMMUNICATION PORTS

a) OVERVIEW

In addition to the faceplate RS232 port, the G60 provides a rear RS485 communication port.

The CPU modules do not require a surge ground connection.

If using a Process Bus Module and IRIG-B as the synchronizing source, GE recommends moving the grounding from the IRIG-B generator to UR terminal D4a in order to better protect the IRIG-B input from long bursts of transient noise.

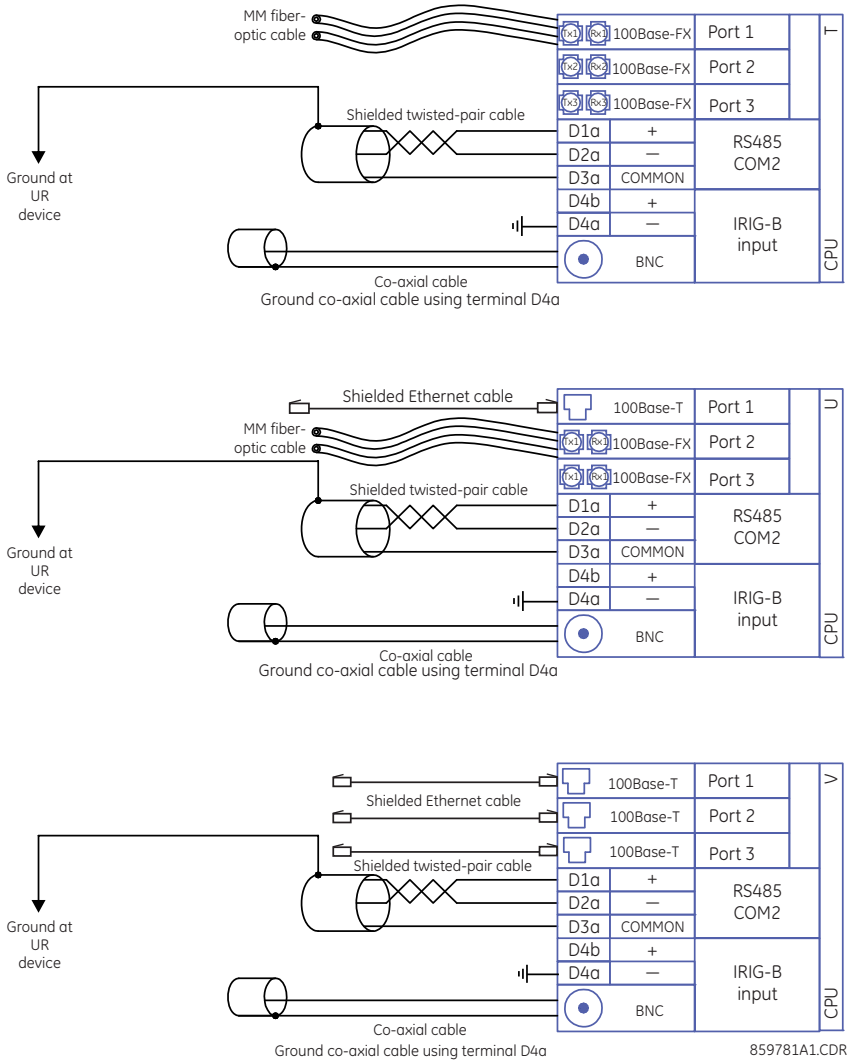

Figure 3–30: CPU MODULE WIRING WHEN USING PROCESS BUS MODULE

If not using a Process Bus Module, the following IRIG-B cable and ground connection is appropriate.

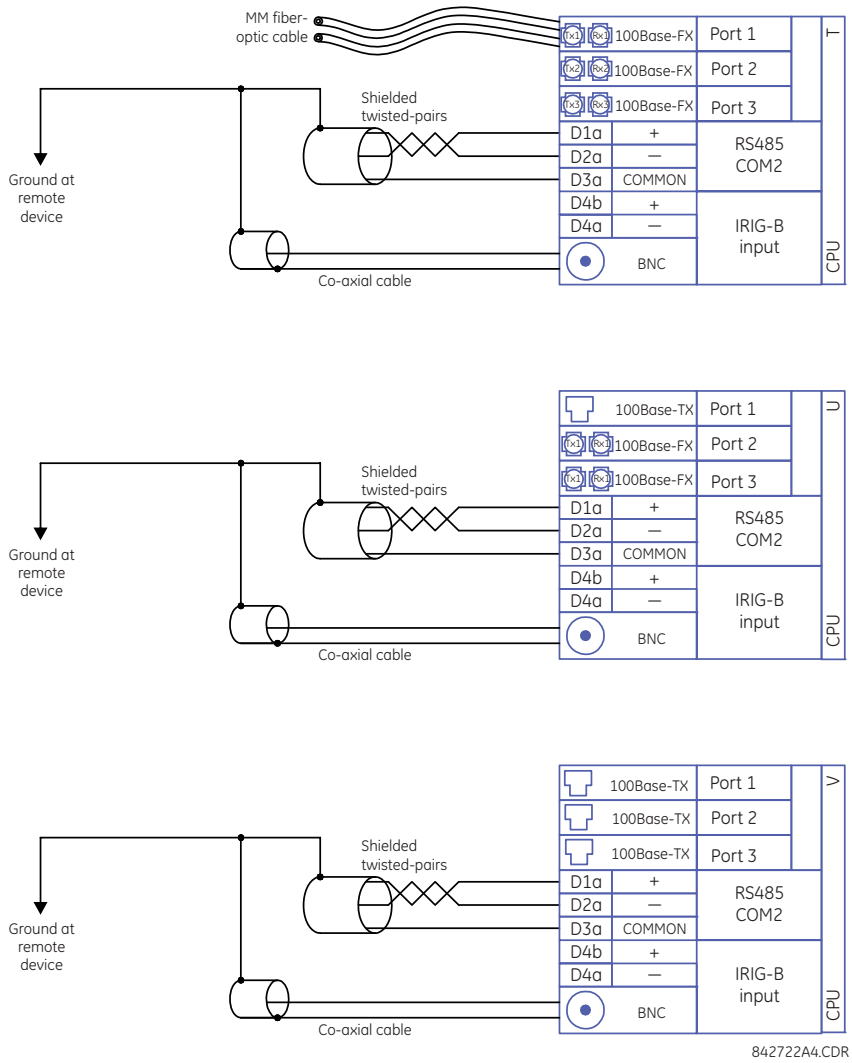

Figure 3–31: CPU MODULE WIRING FOR IRIG-B WITHOUT PROCESS BUS MODULE

b) RS485 PORTS

RS485 data transmission and reception are accomplished over a single twisted pair with transmit and receive data alternating over the same two wires. Through the use of the port, continuous monitoring and control from a remote computer, SCADA system, or PLC is possible.

To minimize errors from noise, the use of shielded twisted pair wire is recommended. Correct polarity must also be observed. For instance, the relays must be connected with all RS485 "+" terminals connected together, and all RS485 "–" terminals connected together. Though data is transmitted over a two-wire twisted pair, all RS485 devices require a shared reference, or common voltage. This common voltage is implied to be a power supply common. Some systems allow the shield (drain wire) to be used as common wire and to connect directly to the G60 COM terminal (#3); others function correctly only if the common wire is connected to the G60 COM terminal, but insulated from the shield.

To avoid loop currents, ground the shield at only one point. If other system considerations require the shield to be grounded at more than one point, install resistors (typically 100 ohms) between the shield and ground at each grounding point. Each relay needs to be daisy-chained to the next one in the link. A maximum of 32 relays can be connected in this manner without exceeding driver capability. For larger systems, additional serial channels must be added. It is also possible to use commercially available repeaters to have more than 32 relays on a single channel. Avoid star or stub connections entirely.

Lightning strikes and ground surge currents can cause large momentary voltage differences between remote ends of the communication link. For this reason, surge protection devices are internally provided at both communication ports. An isolated power supply with an optocoupled data interface also acts to reduce noise coupling. To ensure maximum reliability, all equipment should have similar transient protection devices installed.

Terminate both ends of the RS485 circuit with an impedance as shown below.

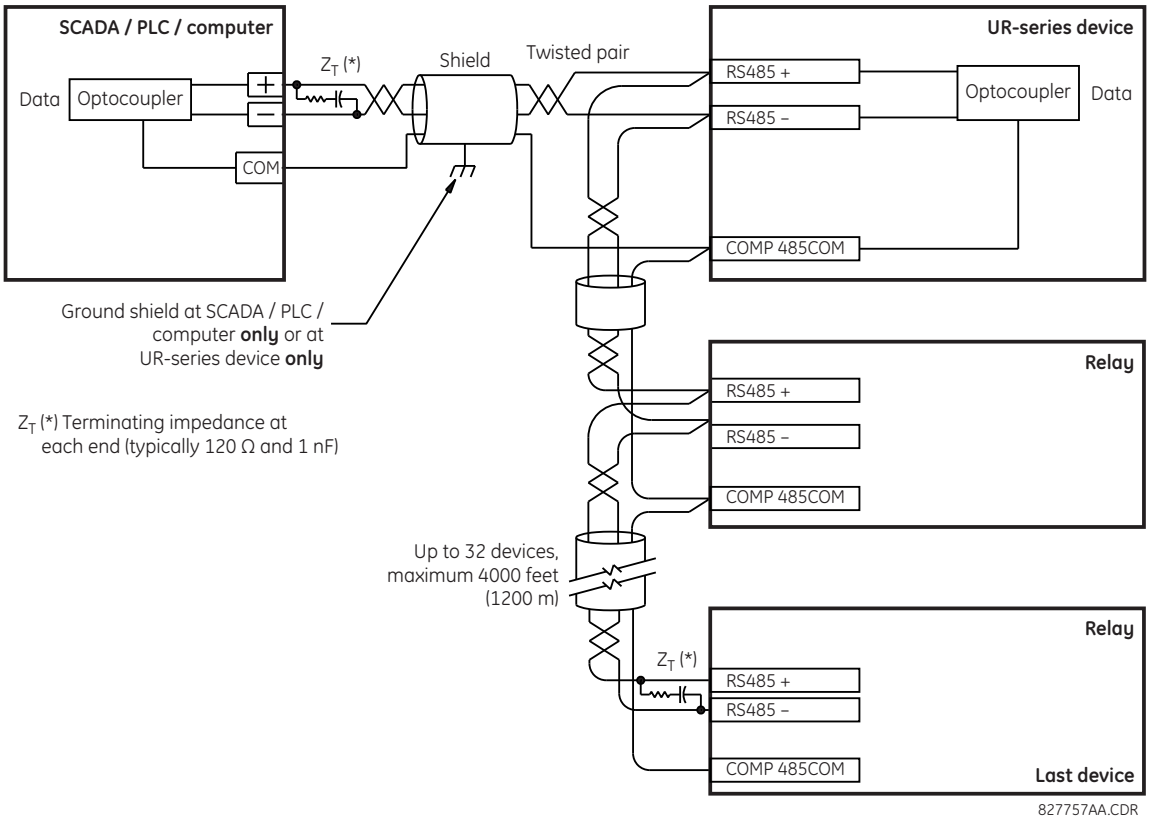

Figure 3–32: RS485 SERIAL CONNECTION

c) 100BASE-FX FIBER OPTIC PORTS

Ensure that the dust covers are installed when the fiber is not in use. Dirty or scratched connectors can lead to high losses on a fiber link.

The fiber optic communication ports allow for fast and efficient communications between relays at 100 Mbps. Optical fiber can be connected to the relay supporting a wavelength of 1310 nm in multi-mode.

3.2.10 IRIG-B

IRIG-B is a standard time code format that allows stamping of events to be synchronized among connected devices. The IRIG-B code allows time accuracies of up to 100 ns. Using the IRIG-B input, the G60 operates an internal oscillator with 1 µs resolution and accuracy. The IRIG time code formats are serial, pulse width-modulated codes that can be either DC level shifted or amplitude modulated (AM). The GE MultiSync 100 1588 GPS Clock as well as third-party equipment are available for generating the IRIG-B signal; this equipment can use a global positioning system (GPS) satellite system to obtain the time reference so that devices at different geographic locations can be synchronized.

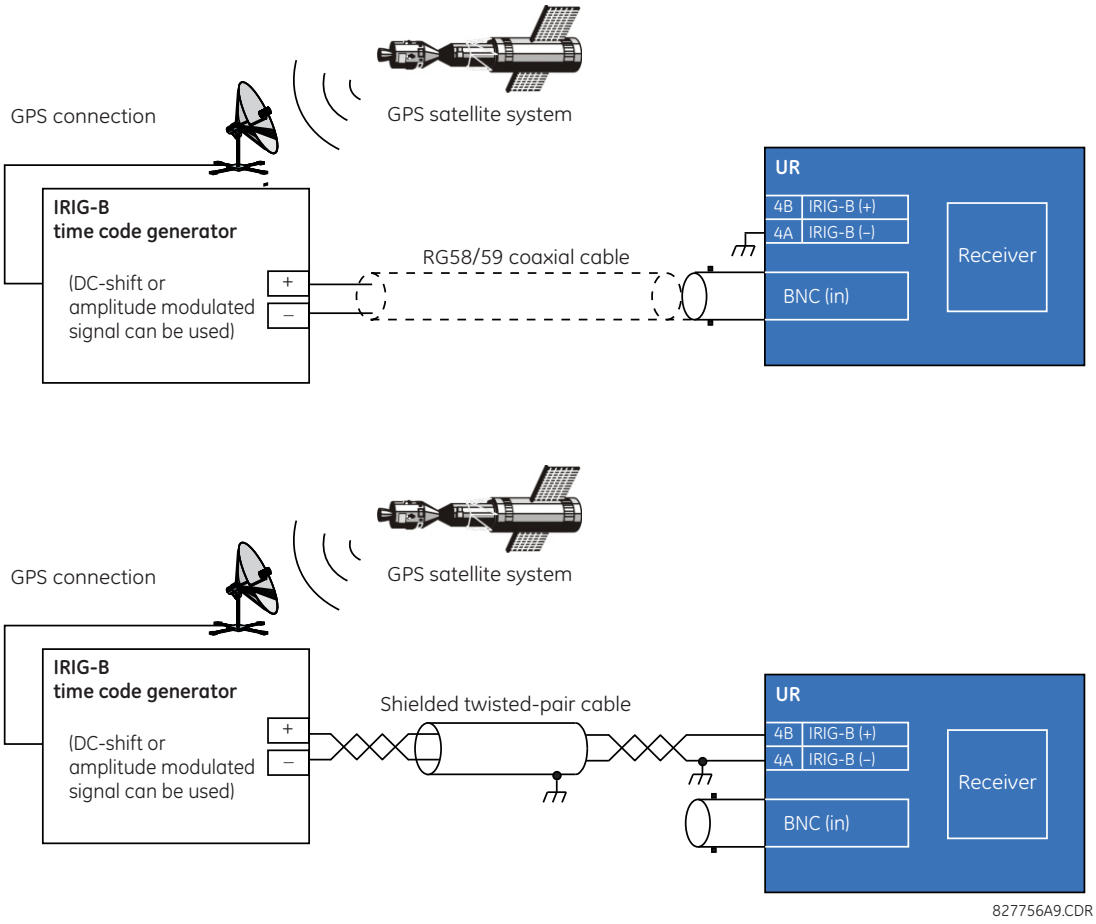

Figure 3–33: OPTIONS FOR THE IRIG-B CONNECTION

NOTE

Using an amplitude modulated receiver causes errors up to 1 ms in event time-stamping.

The G60 is intended for use with external clocks that set the IRIG-B control bits according to IEEE Std C37.118.1-2011. When used with a source that sets the IRIG-B control bits according to IEEE Std 1344-1995, the source must have the sign of its local time offset setting reversed, and if daylight savings time (DST) is used, the source's DST start and DST stop date settings must be interchanged.

NOTE

When IRIG-B is used as the time synchronization source for synchrophasors, the DC level shifted option must be used in order to achieve the 1% Total Vector Error specified by the standard. If amplitude modulated IRIG-B is used, it results in a 20 to 25 degree error in the synchrophasor angle measurement. The IEEE 1588 Precision Time Protocol can also be used to achieve accurate time synchronization for synchrophasor calculation.

3.3.1 DESCRIPTION

The direct inputs and outputs feature makes use of the type 7 series of communications modules, which allow direct messaging between UR devices. These communications modules are outlined in the table later in this section.

The communications channels are normally connected in a ring configuration as shown in the following figure. The transmitter of one module is connected to the receiver of the next module. The transmitter of this second module is then connected to the receiver of the next module in the ring. This is continued to form a communications ring. The figure illustrates a ring of four UR-series relays with the following connections: UR1-Tx to UR2-Rx, UR2-Tx to UR3-Rx, UR3-Tx to UR4-Rx, and UR4-Tx to UR1-Rx. A maximum of 16 URs can be connected in a single ring.

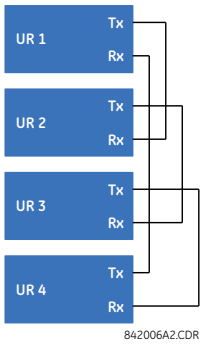

Figure 3–34: DIRECT INPUT AND OUTPUT SINGLE CHANNEL CONNECTION

IRC modules with protocol C37.94 and G.703 are designed for back-to-back communication connections, so the ring configuration shown in the previous figure does not apply. To establish inter-relay communication in more than two URs, you need to have two channel IRC module and enable DIRECT I/O CHANNEL CROSSOVER function in all relays, as shown in the next figure. This configuration can be expanded to 16 URs, and this configuration does not provide redundancy ring since both channels are made into single ring by the channel crossover function. As per the figure Typical Pin Interconnection between Two G.703 Interfaces later in this chapter, the clock is supplied typically by multiplexer (MUX) and all URs are in Loop Timing Mode. If there is no MUX, then UR1 and UR3 can be in Internal Timing Mode and UR2 and UR4 can be in Loop Timing Mode. That is, connected channels must have opposite timing modes.

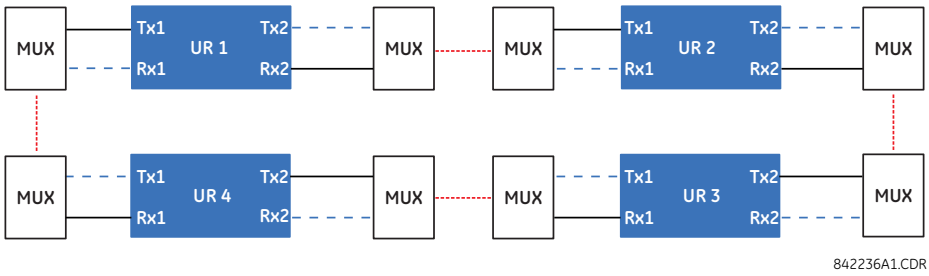

Figure 3–35: RING CONFIGURATION FOR C37.94 MODULE (CONCEPT ALSO APPLIES TO G.703)

The interconnection for dual-channel type 7 communications modules is shown as follows. Two channel modules allow for a redundant ring configuration. That is, two rings can be created to provide an additional independent data path. The required connections are: UR1-Tx1 to UR2-Rx1, UR2-Tx1 to UR3-Rx1, UR3-Tx1 to UR4-Rx1, and UR4-Tx1 to UR1-Rx1 for the first ring; and UR1-Tx2 to UR4-Rx2, UR4-Tx2 to UR3-Rx2, UR3-Tx2 to UR2-Rx2, and UR2-Tx2 to UR1-Rx2 for the second ring.

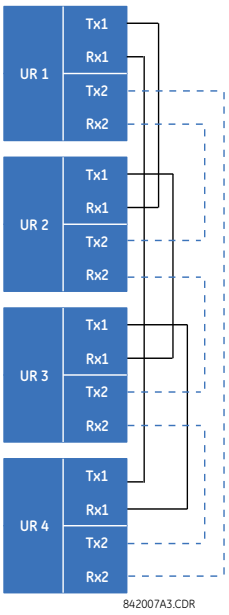

Figure 3–36: DIRECT INPUT AND OUTPUT DUAL CHANNEL CONNECTION

The following diagram shows the connection for three UR-series relays using two independent communication channels. UR1 and UR3 have single type 7 communication modules; UR2 has a dual-channel module. The two communication channels can be of different types, depending on the Type 7 modules used. To allow the direct input and output data to *crossover* from channel 1 to channel 2 on UR2, the **DIRECT I/O CHANNEL CROSSOVER** setting should be "Enabled" on UR2. This forces UR2 to forward messages received on Rx1 out Tx2, and messages received on Rx2 out Tx1.

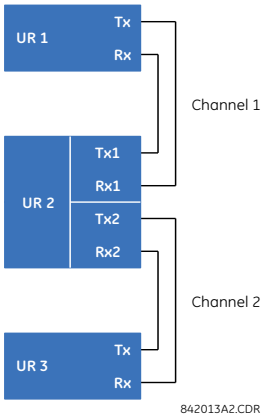

Figure 3–37: DIRECT INPUT AND OUTPUT SINGLE/DUAL CHANNEL COMBINATION CONNECTION

The inter-relay communications modules are available with several interfaces and some are outlined here in more detail. Those that apply depend on options purchased. The options are outlined in the Inter-Relay Communications section of the Order Code tables in Chapter 2. All of the fiber modules use ST type connectors.

3.3.2 FIBER: LED AND ELED TRANSMITTERS

The following figure shows the configuration for the 7A, 7B, 7C, 7H, 7I, and 7J fiber-only modules.

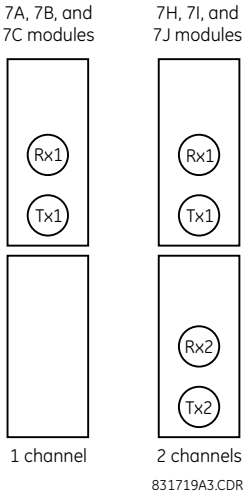

Figure 3–38: LED AND ELED FIBER MODULES

3.3.3 FIBER-LASER TRANSMITTERS

The following figure shows the configuration for the 72, 73, 7D, and 7K fiber-laser modules.

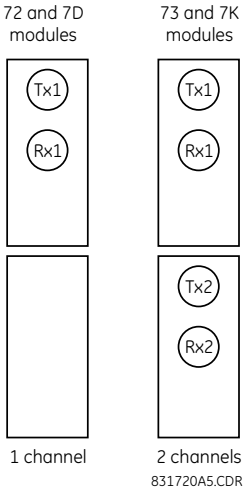

Figure 3–39: 7X LASER FIBER MODULES

The following figure shows configuration for the 2I and 2J fiber-laser module.

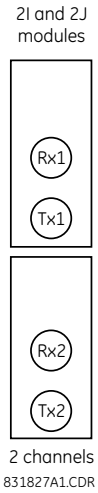

Figure 3–40: 2I AND 2J LASER FIBER MODULE

CAUTION **Observing any fiber transmitter output can injure the eye.**

NOTICE When using a laser Interface, attenuators can be necessary to ensure that you do not exceed the maximum optical input power to the receiver.

a) DESCRIPTION

The following figure shows the 64K ITU G.703 co-directional interface configuration.

NOTE

The G.703 module is fixed at 64 kbps. The **SETTINGS ⇨ PRODUCT SETUP ⇨⇩ DIRECT I/O ⇨⇩ DIRECT I/O DATA RATE** setting is not applicable to this module.

AWG 24 twisted shielded pair is recommended for external connections, with the shield grounded only at one end. Connecting the shield to pin X1a or X6a grounds the shield since these pins are internally connected to ground. Thus, if pin X1a or X6a is used to ground the shield at one end, do not ground the shield at the other end. This interface module is protected by surge suppression devices.

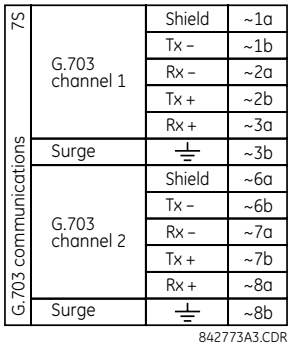

Figure 3–41: G.703 INTERFACE CONFIGURATION

The following figure shows the typical pin interconnection between two G.703 interfaces. For the actual physical arrangement of these pins, see the Rear Terminal Layout section earlier in this chapter. All pin interconnections are to be maintained for a connection to a multiplexer.

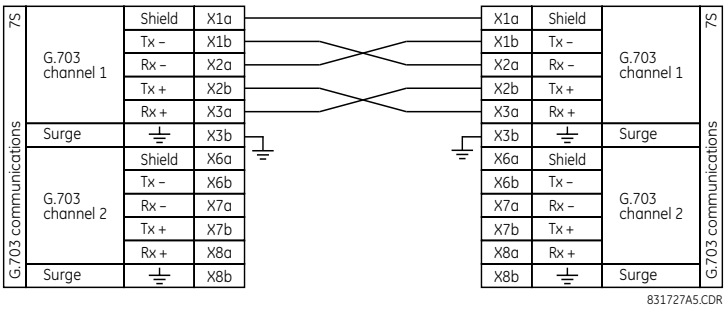

Figure 3–42: TYPICAL PIN INTERCONNECTION BETWEEN TWO G.703 INTERFACES

NOTE

Pin nomenclature can differ from one manufacturer to another. Therefore, it is not uncommon to see pinouts numbered TxA, TxB, RxA and RxB. In such cases, it can be assumed that "A" is equivalent to "+" and "B" is equivalent to "–".

b) G.703 SELECTION SWITCH PROCEDURES

1. With the power to the relay off, remove the G.703 module (7R or 7S) as follows. Record the original location of the module to help ensure that the same or replacement module is inserted into the correct slot.
2. Simultaneously pull the ejector/inserter clips located at the top and at the bottom of each module in order to release the module for removal.
3. Remove the module cover screw.
4. Remove the top cover by sliding it towards the rear and then lift it upwards.
5. Set the timing selection switches (channel 1, channel 2) to the desired timing modes.

6. Replace the top cover and the cover screw.
7. Re-insert the G.703 module. Take care to ensure that the **correct** module type is inserted into the **correct** slot position. The ejector/inserter clips located at the top and at the bottom of each module must be in the disengaged position as the module is smoothly inserted into the slot. Once the clips have cleared the raised edge of the chassis, engage the clips simultaneously. When the clips have locked into position, the module is fully inserted.

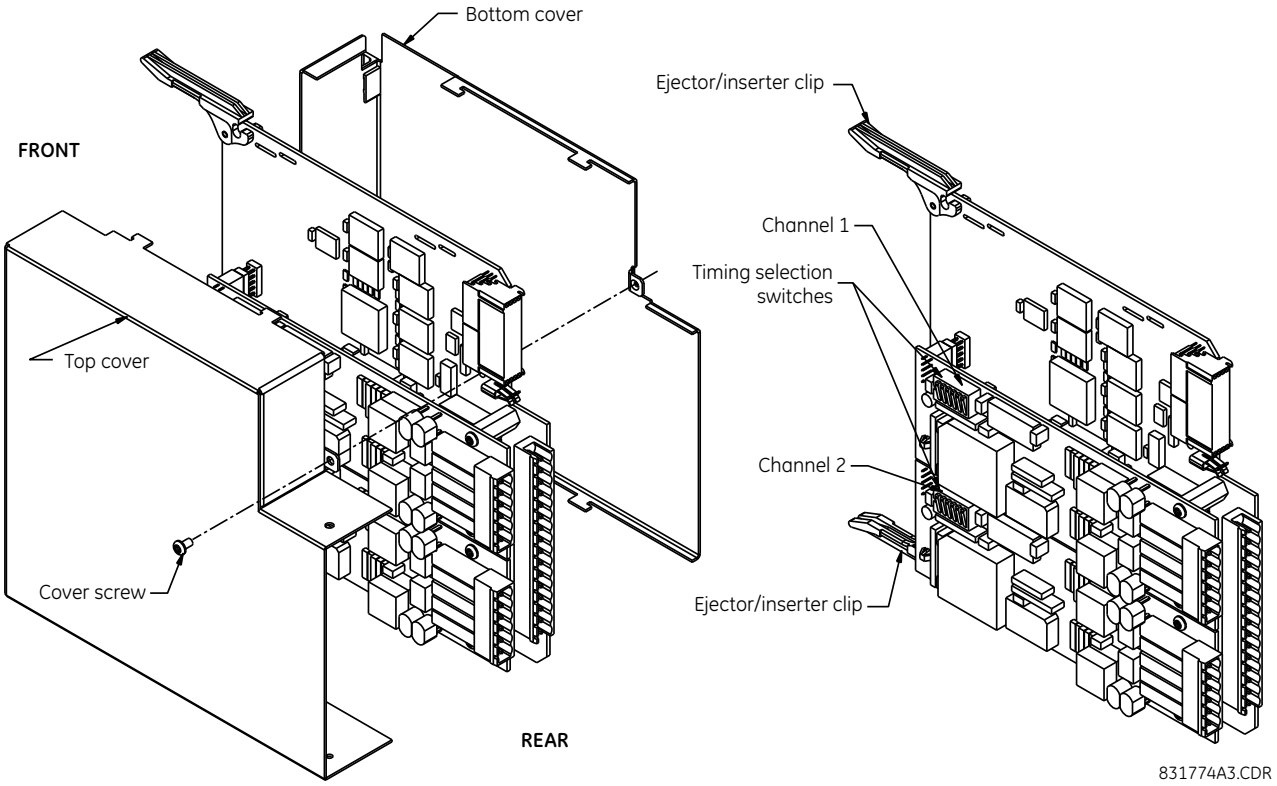

Figure 3–43: G.703 TIMING SELECTION SWITCH SETTING

Table 3–5: G.703 TIMING SELECTIONS

SWITCHES	FUNCTION
S1	OFF → octet timing disabled ON → octet timing 8 kHz
S5 and S6	S5 = OFF and S6 = OFF → loop timing mode S5 = ON and S6 = OFF → internal timing mode S5 = OFF and S6 = ON → minimum remote loopback mode S5 = ON and S6 = ON → dual loopback mode

c) G.703 OCTET TIMING

If octet timing is enabled (ON), this 8 kHz signal is asserted during the violation of bit 8 (LSB) necessary for connecting to higher order systems. When G60s are connected back-to-back, octet timing is disabled (OFF).

d) G.703 TIMING MODES

There are two timing modes for the G.703 module: internal timing mode and loop timing mode (default).

- **Internal Timing Mode:** The system clock is generated internally. Therefore, the G.703 timing selection should be in the internal timing mode for back-to-back (UR-to-UR) connections. For back-to-back connections, set for octet timing (S1 = OFF) and timing mode to internal timing (S5 = ON and S6 = OFF).
- **Loop Timing Mode:** The system clock is derived from the received line signal. Therefore, the G.703 timing selection should be in loop timing mode for connections to higher order systems. For connection to a higher order system (UR-

to-multiplexer, factory defaults), set to octet timing (S1 = ON) and set timing mode to loop timing (S5 = OFF and S6 = OFF).

The switch settings for the internal and loop timing modes are shown below:

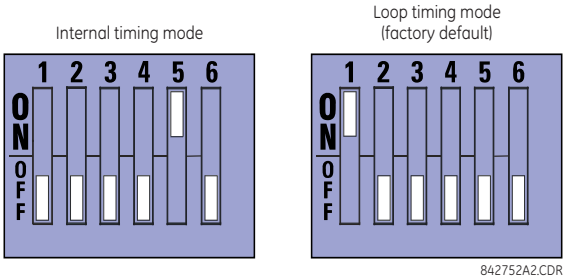

e) G.703 TEST MODES

In *minimum remote loopback* mode, the multiplexer is enabled to return the data from the external interface without any processing to assist in diagnosing G.703 line-side problems irrespective of clock rate. Data enters from the G.703 inputs, passes through the data stabilization latch which also restores the proper signal polarity, passes through the multiplexer and then returns to the transmitter. The differential received data is processed and passed to the G.703 transmitter module after which point the data is discarded. The G.703 receiver module is fully functional and continues to process data and passes it to the differential Manchester transmitter module. Since timing is returned as it is received, the timing source is expected to be from the G.703 line side of the interface.

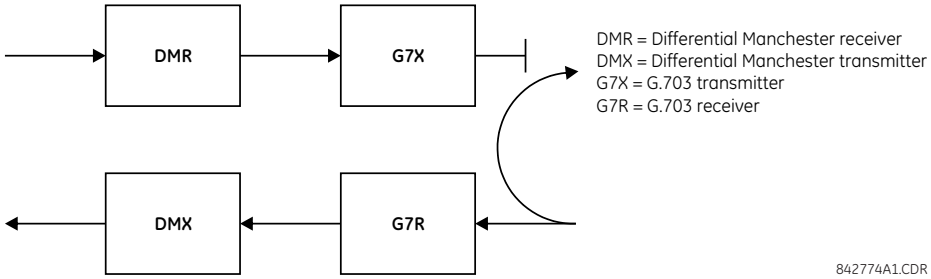

Figure 3–44: G.703 MINIMUM REMOTE LOOPBACK MODE

In *dual loopback mode*, the multiplexers are active and the functions of the circuit are divided into two with each receiver/transmitter pair linked together to deconstruct and then reconstruct their respective signals. Differential Manchester data enters the Differential Manchester receiver module and then is returned to the differential Manchester transmitter module. Likewise, G.703 data enters the G.703 receiver module and is passed through to the G.703 transmitter module to be returned as G.703 data. Because of the complete split in the communications path and because, in each case, the clocks are extracted and reconstructed with the outgoing data, in this mode there must be two independent sources of timing. One source lies on the G.703 line side of the interface while the other lies on the differential Manchester side of the interface.

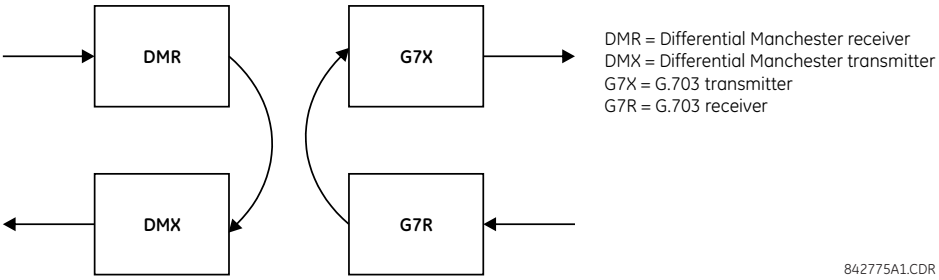

Figure 3–45: G.703 DUAL LOOPBACK MODE

a) DESCRIPTION

There are two RS422 inter-relay communications modules available: single-channel RS422 (module 7T) and dual-channel RS422 (module 7W). The modules can be configured to run at 64 kbps or 128 kbps. AWG 20-24 twisted shielded pair cable is recommended for external connections. These modules are protected by optically-isolated surge suppression devices.

The shield pins (6a and 7b) are internally connected to the ground pin (8a). Proper shield termination is as follows:

- Site 1: Terminate shield to pins 6a or 7b or both.
- Site 2: Terminate shield to COM pin 2b.

Match the clock terminating impedance with the impedance of the line.

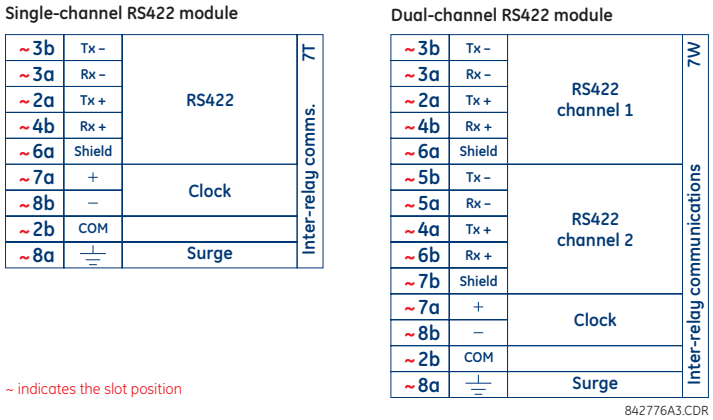

Figure 3–46: RS422 INTERFACE CONNECTIONS

The following figure shows the typical pin interconnection between two single-channel RS422 interfaces installed in slot W. All pin interconnections are to be maintained for a connection to a multiplexer.

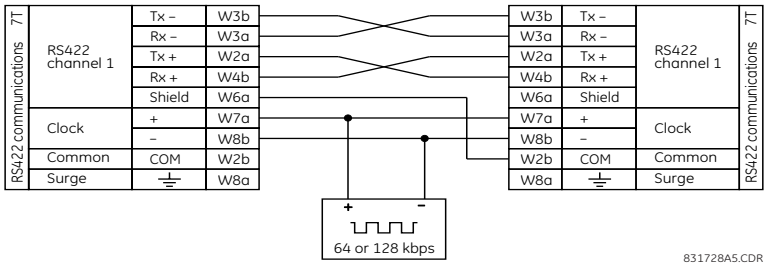

Figure 3–47: TYPICAL PIN INTERCONNECTION BETWEEN TWO RS422 INTERFACES

b) TWO-CHANNEL APPLICATION VIA MULTIPLEXERS

The RS422 interface can be used for single channel or two channel applications over SONET/SDH or multiplexed systems. When used in single-channel applications, the RS422 interface links to higher order systems in a typical fashion observing transmit (Tx), receive (Rx), and send timing (ST) connections. However, when used in two-channel applications, certain criteria must be followed since there is one clock input for the two RS422 channels. The system functions correctly when the following connections are observed and your data module has a terminal timing feature. Terminal timing is a common feature to most synchronous data units that allows the module to accept timing from an external source. Using the terminal timing feature, two channel applications can be achieved if these connections are followed: The send timing outputs from the multiplexer (data module 1), connects to the clock inputs of the UR–RS422 interface in the usual fashion. In addition, the send timing outputs of data module 1 is also paralleled to the terminal timing inputs of data module 2. By using this configuration, the timing for both data modules and both UR–RS422 channels are derived from a single clock source. As a

result, data sampling for both of the UR–RS422 channels is synchronized via the send timing leads on data module 1 as shown below. If the terminal timing feature is not available or this type of connection is not desired, the G.703 interface is a viable option that does not impose timing restrictions.

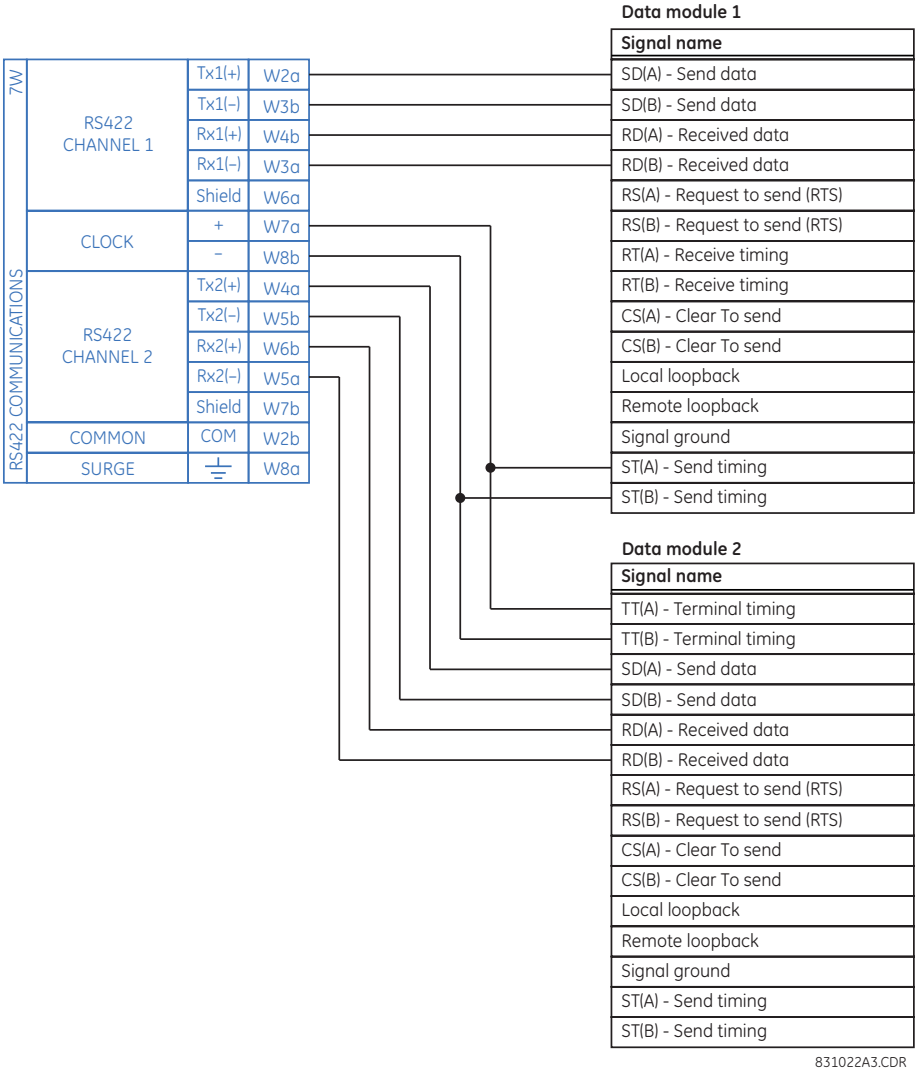

Figure 3–48: TIMING CONFIGURATION FOR RS422 TWO-CHANNEL, THREE-TERMINAL APPLICATION

Data module 1 provides timing to the G60 RS422 interface via the ST(A) and ST(B) outputs. Data module 1 also provides timing to data module 2 TT(A) and TT(B) inputs via the ST(A) and AT(B) outputs. The data module pin numbers have been omitted in the figure above since they vary by manufacturer.

c) TRANSMIT TIMING

The RS422 interface accepts one clock input for transmit timing. It is important that the rising edge of the 64 kHz transmit timing clock of the multiplexer interface is sampling the data in the center of the transmit data window. Therefore, it is important to confirm clock and data transitions to ensure proper system operation. For example, the following figure shows the positive edge of the Tx clock in the center of the Tx data bit.

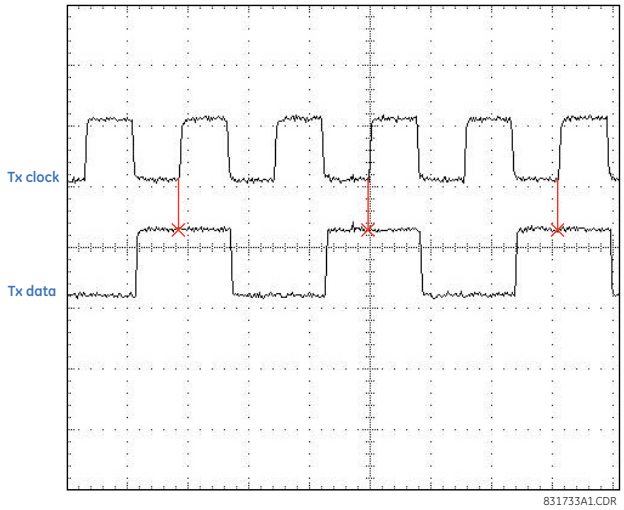

Figure 3–49: CLOCK AND DATA TRANSITIONS

d) RECEIVE TIMING

The RS422 interface utilizes NRZI-MARK modulation code and; therefore, does not rely on an Rx clock to recapture data. NRZI-MARK is an edge-type, invertible, self-clocking code.

To recover the Rx clock from the data-stream, an integrated DPLL (digital phase lock loop) circuit is utilized. The DPLL is driven by an internal clock, which is 16-times over-sampled, and uses this clock along with the data-stream to generate a data clock that can be used as the SCC (serial communication controller) receive clock.

3.3.6 RS422 AND FIBER INTERFACE

The following figure shows the combined RS422 plus fiberoptic interface configuration at 64K baud. The 7L, 7M, 7N, 7P, and 74 modules are used in two-terminal with a redundant channel or three-terminal configurations where channel 1 is employed via the RS422 interface (possibly with a multiplexer) and channel 2 via direct fiber.

AWG 20-24 twisted shielded pair is recommended for external RS422 connections and ground the shield only at one end. For the direct fiber channel, address power budget issues properly.

NOTICE When using a LASER Interface, attenuators can be necessary to ensure that you do not exceed maximum optical input power to the receiver.

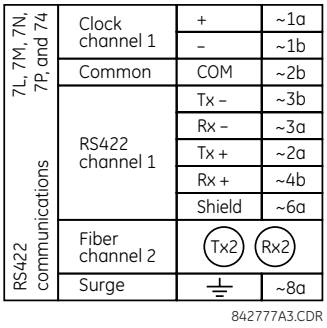

Figure 3–50: RS422 AND FIBER INTERFACE CONNECTION

Connections shown above are for multiplexers configured as DCE (data communications equipment) units.

3.3.7 G.703 AND FIBER INTERFACE

The figure below shows the combined G.703 plus fiberoptic interface configuration at 64 kbps. The 7E, 7F, 7G, 7Q, and 75 modules are used in configurations where channel 1 is employed via the G.703 interface (possibly with a multiplexer) and channel 2 via direct fiber. AWG 24 twisted shielded pair is recommended for external G.703 connections connecting the shield to pin 1a at one end only. For the direct fiber channel, address power budget issues properly. See previous sections for additional details on the G.703 and fiber interfaces.

NOTICE When using a laser Interface, attenuators can be necessary to ensure that you do not exceed the maximum optical input power to the receiver.

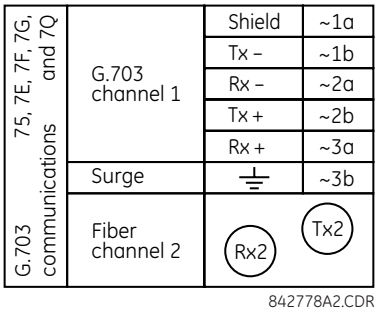

Figure 3–51: G.703 AND FIBER INTERFACE CONNECTION

3.3.8 IEEE C37.94 INTERFACE

The UR-series IEEE C37.94 communication modules (modules types 2G, 2H, 2I, 2J, 76, and 77) are designed to interface with IEEE C37.94 compliant digital multiplexers or an IEEE C37.94 compliant interface converter for use with direct input and output applications. The IEEE C37.94 standard defines a point-to-point optical link for synchronous data between a multiplexer and a teleprotection device. This data is typically 64 kbps, but the standard provides for speeds up to 64*n* kbps, where *n* = 1, 2,…, 12. The UR-series C37.94 communication modules are either 64 kbps (with *n* fixed at 1) or 128 kbps (with *n* fixed at 2). The frame is a valid International Telecommunications Union (ITU-T) recommended G.704 pattern from the standpoint of framing and data rate. The frame is 256 bits and is repeated at a frame rate of 8000 Hz, with a resultant bit rate of 2048 kbps.

The specifications for the module are as follows:.

- IEEE standard: C37.94 for 1 × 128 kbps optical fiber interface (for 2G and 2H modules) or C37.94 for 2 × 64 kbps optical fiber interface (for 76 and 77 modules)
- Fiber optic cable type: 50 nm or 62.5 µm core diameter optical fiber
- Fiber optic mode: multimode
- Fiber optic cable length: up to 2 km
- Fiber optic connector: type ST
- Wavelength: 820 ±40 nm
- Connection: as per all fiber optic connections, a Tx-to-Rx connection is required

The UR-series C37.94 communication module can be connected directly to any compliant digital multiplexer that supports the IEEE C37.94 standard shown as follows.

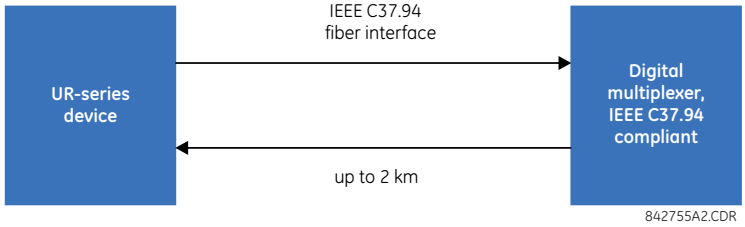

The UR-series C37.94 communication module can be connected to the electrical interface (G.703, RS422, or X.21) of a non-compliant digital multiplexer via an optical-to-electrical interface converter that supports the IEEE C37.94 standard, shown as follows.

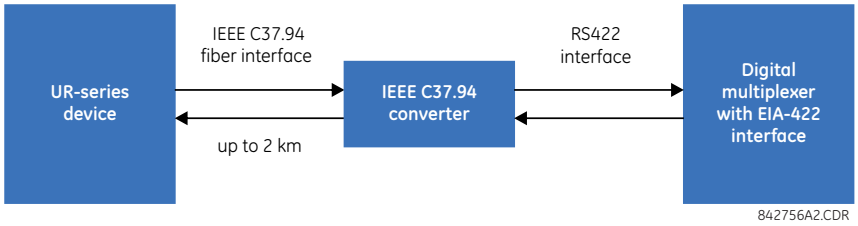

In 2008, GE Grid Solutions released revised modules 76 and 77 for C37.94 communication to enable multi-ended fault location functionality with firmware 5.60 release and higher. All modules 76 and 77 shipped the change support this feature and are fully backward compatible with firmware releases below 5.60. For customers using firmware release 5.60 and higher, the module can be identified with "Rev D" printed on the module and is to be used on all ends of G60 communication for two and three terminal applications. Failure to use it at all ends results in intermittent communication alarms. For customers using firmware revisions below 5.60, it is not required to match the revision of the modules installed.

The UR-series C37.94 communication module has six switches to set the clock configuration. The following figure shows the functions of these control switches.

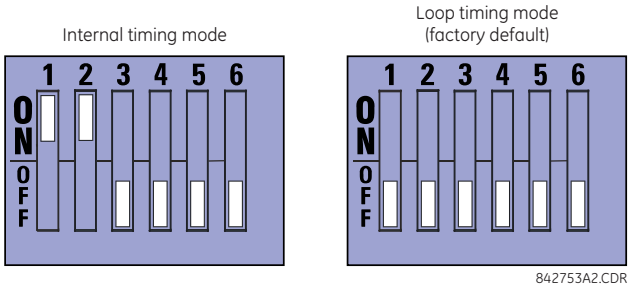

For the internal timing mode, the system clock is generated internally. Therefore, the timing switch selection should be internal timing for relay 1 and loop timed for relay 2. There must be only one timing source configured.

For the looped timing mode, the system clock is derived from the received line signal. Therefore, the timing selection should be in loop timing mode for connections to higher order systems.

The IEEE C37.94 communications module cover removal procedure is as follows:

1. With power to the relay off, remove the IEEE C37.94 module (type 2G, 2H, 2I, 2J, 76 or 77 module) as follows. Record the original location of the module to help ensure that the same or replacement module is inserted into the correct slot.
2. Simultaneously pull the ejector/inserter clips located at the top and at the bottom of each module in order to release the module for removal.
3. Remove the module cover screw.
4. Remove the top cover by sliding it towards the rear and then lift it upwards.

5. Set the timing selection switches (channel 1, channel 2) to the desired timing modes (see description above).
6. Replace the top cover and the cover screw.
7. Re-insert the IEEE C37.94 module. Take care to ensure that the **correct** module type is inserted into the **correct** slot position. The ejector/inserter clips located at the top and at the bottom of each module must be in the disengaged position as the module is smoothly inserted into the slot. Once the clips have cleared the raised edge of the chassis, engage the clips simultaneously. When the clips have locked into position, the module is fully inserted.

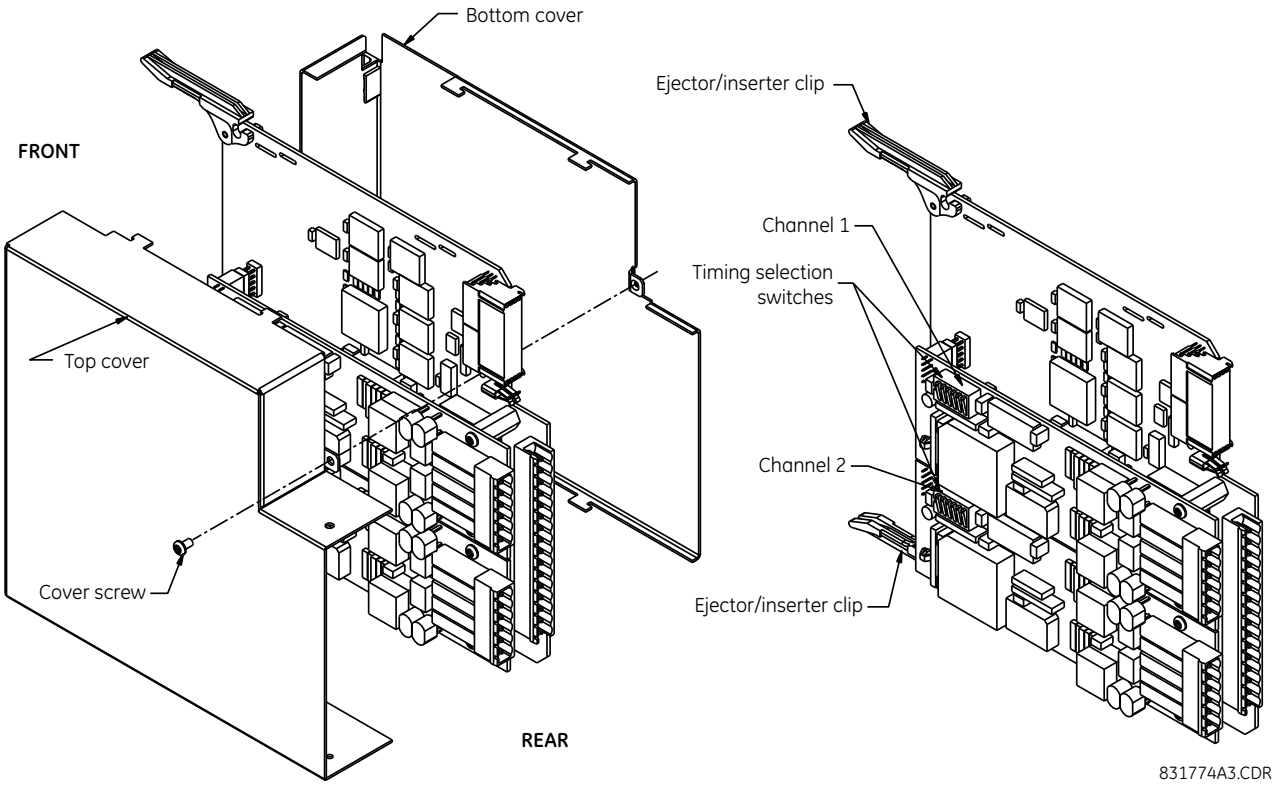

Figure 3–52: IEEE C37.94 TIMING SELECTION SWITCH SETTING

Modules shipped since January 2012 have status LEDs that indicate the status of the DIP switches, as shown in the following figure.

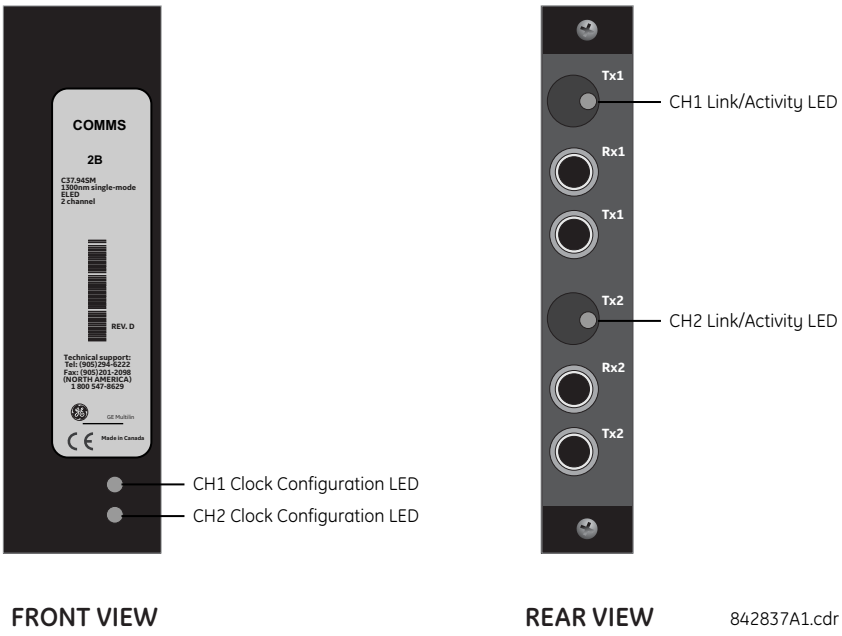

Figure 3–53: STATUS LEDS

The clock configuration LED status is as follows:

- Flashing green — loop timing mode while receiving a valid data packet
- Flashing yellow — internal mode while receiving a valid data packet
- Solid red — (switch to) internal timing mode while not receiving a valid data packet

The link/activity LED status is as follows:

- Flashing green — FPGA is receiving a valid data packet
- Solid yellow — FPGA is receiving a "yellow bit" and remains yellow for each "yellow bit"
- Solid red — FPGA is not receiving a valid packet or the packet received is invalid

3.3.9 C37.94SM INTERFACE

The UR-series C37.94SM communication modules (2A and 2B) are designed to interface with modified IEEE C37.94 compliant digital multiplexers or IEEE C37.94 compliant interface converters that have been converted from 820 nm multi-mode fiber optics to 1300 nm ELED single-mode fiber optics. The IEEE C37.94 standard defines a point-to-point optical link for synchronous data between a multiplexer and a teleprotection device. This data is typically 64 kbps, but the standard provides for speeds up to 64*n* kbps, where *n* = 1, 2,…, 12. The UR-series C37.94SM communication module is 64 kbps only with *n* fixed at 1. The frame is a valid International Telecommunications Union (ITU-T) recommended G.704 pattern from the standpoint of framing and data rate. The frame is 256 bits and is repeated at a frame rate of 8000 Hz, with a resultant bit rate of 2048 kbps.

The specifications for the module are as follows:

- Emulated IEEE standard: emulates C37.94 for 1 × 64 kbps optical fiber interface (modules set to *n* = 1 or 64 kbps)
- Fiber optic cable type: 9/125 μm core diameter optical fiber
- Fiber optic mode: single-mode, ELED compatible with HP HFBR-1315T transmitter and HP HFBR-2316T receiver
- Fiber optic cable length: up to 11.4 km
- Fiber optic connector: type ST
- Wavelength: 1300 ±40 nm
- Connection: as per all fiber optic connections, a Tx-to-Rx connection is required

The UR-series C37.94SM communication module can be connected *directly* to any compliant digital multiplexer that supports C37.94SM as shown below.

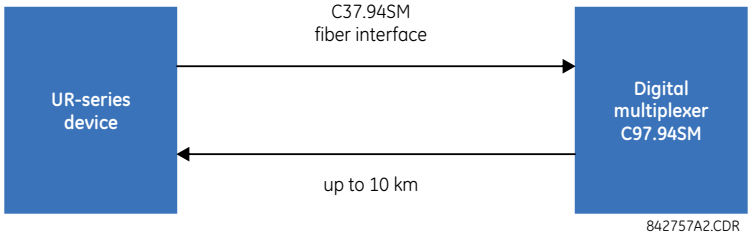

It can also can be connected **directly** to any other UR-series relay with a C37.94SM module as shown below.

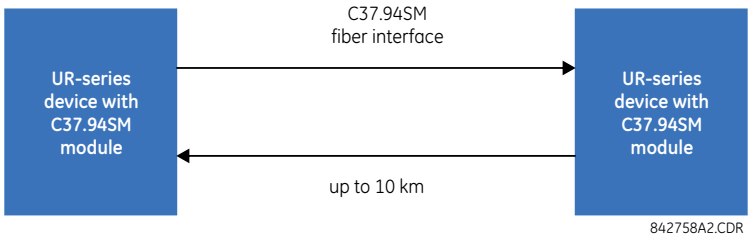

In 2008, GE Grid Solutions released revised modules 2A and 2B for C37.94SM communication to enable multi-ended fault location functionality with firmware 5.60 release and higher. All modules 2A and 2B shipped since the change support this feature and are fully backward compatible with firmware releases below 5.60. For customers using firmware release 5.60 and higher, the module can be identified with "Rev D" printed on the module and is to be used on all ends of G60 communication for two and three terminal applications. Failure to use it at all ends results in intermittent communication alarms. For customers using firmware revisions below 5.60, it is not required to match the revision of the modules installed.

The UR-series C37.94SM communication module has six switches that are used to set the clock configuration. The functions of these control switches are shown below.

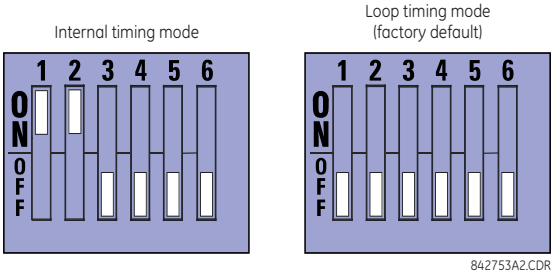

For the internal timing mode, the system clock is generated internally. Therefore, the timing switch selection should be internal timing for relay 1 and loop timed for relay 2. There must be only one timing source configured.

For the looped timing mode, the system clock is derived from the received line signal. Therefore, the timing selection should be in loop timing mode for connections to higher order systems.

The C37.94SM communications module cover removal procedure is as follows:

1. With power to the relay off, remove the C37.94SM module (modules 2A or 2B) as follows. Record the original location of the module to help ensure that the same or replacement module is inserted into the correct slot.
2. Simultaneously pull the ejector/inserter clips located at the top and at the bottom of each module in order to release the module for removal.
3. Remove the module cover screw.
4. Remove the top cover by sliding it towards the rear and then lift it upwards.
5. Set the timing selection switches (channel 1, channel 2) to the desired timing modes (see description above).
6. Replace the top cover and the cover screw.
7. Re-insert the C37.94SM module. Take care to ensure that the **correct** module type is inserted into the **correct** slot position. The ejector/inserter clips located at the top and at the bottom of each module must be in the disengaged position as the module is smoothly inserted into the slot. Once the clips have cleared the raised edge of the chassis, engage the clips simultaneously. When the clips have locked into position, the module is fully inserted.

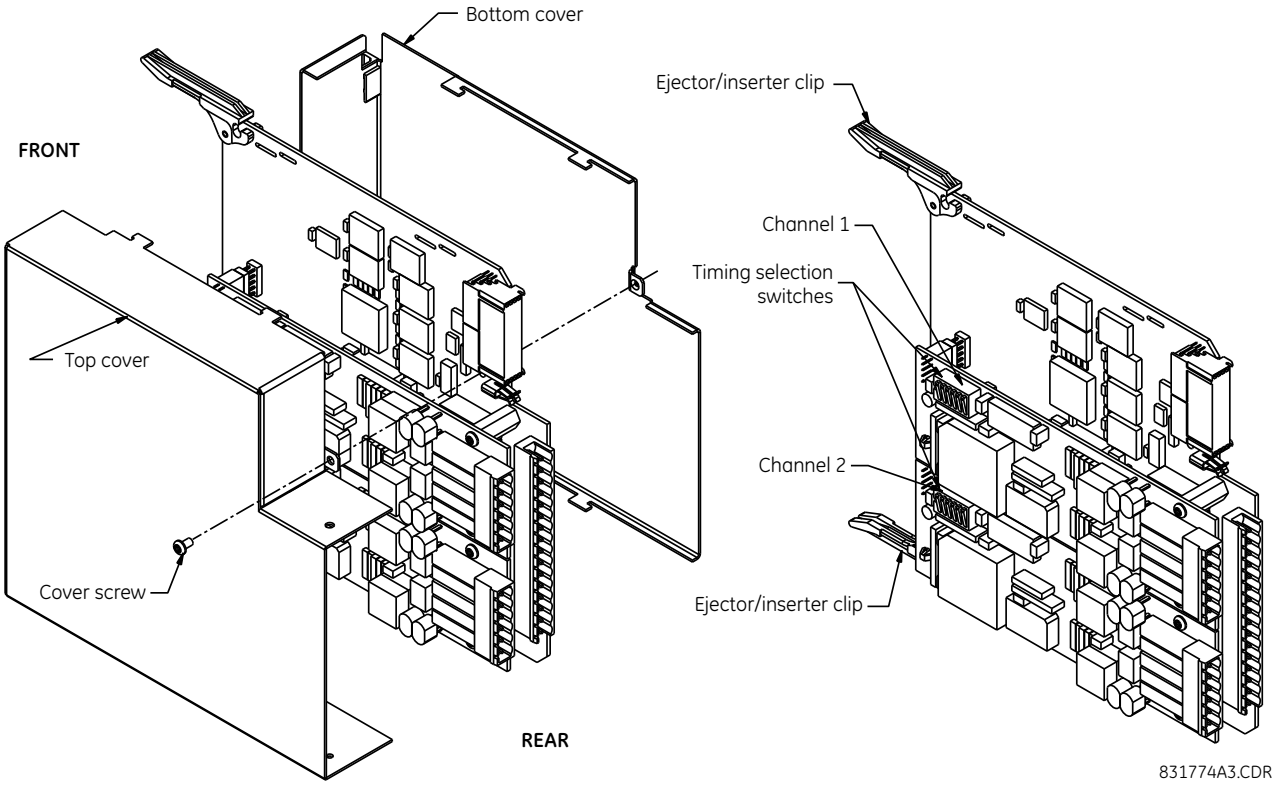

Figure 3–54: C37.94SM TIMING SELECTION SWITCH SETTING

Modules shipped since January 2012 have status LEDs that indicate the status of the DIP switches, as shown in the following figure.

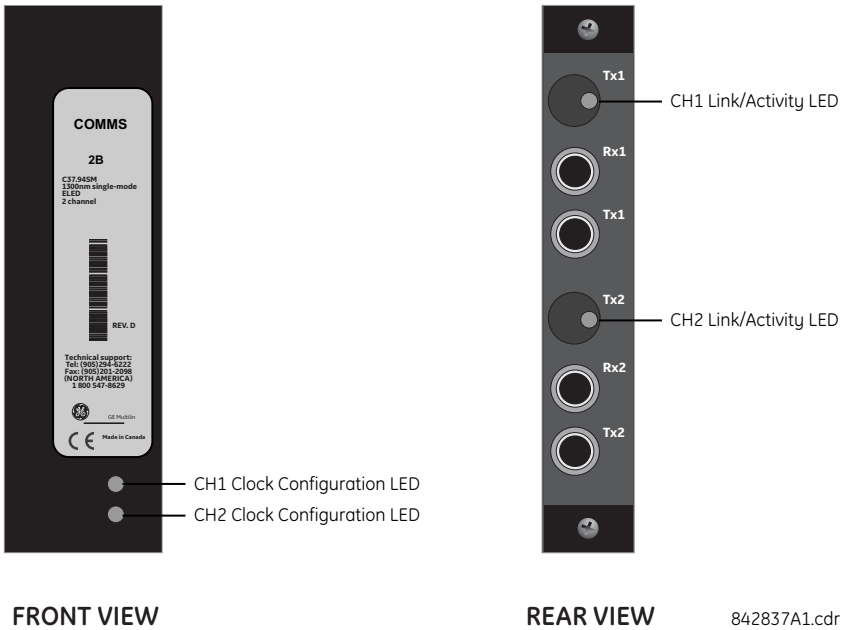

Figure 3–55: STATUS LEDS

The clock configuration LED status is as follows:

- Flashing green — loop timing mode while receiving a valid data packet

- Flashing yellow — internal mode while receiving a valid data packet
- Solid red — (switch to) internal timing mode while not receiving a valid data packet

The link/activity LED status is as follows:

- Flashing green — FPGA is receiving a valid data packet
- Solid yellow — FPGA is receiving a "yellow bit" and remains yellow for each "yellow bit"
- Solid red — FPGA is not receiving a valid packet or the packet received is invalid

3.4.1 OVERVIEW

The field ground protection modules are used with the G60 in the following configurations:

- Field low voltage protection system (order code GPM-F-L) for voltages up to 600 V DC
- Field high voltage protection system (order code GPM-F-H) for voltages greater than 600 V DC
- Stator protection system (order code GPM-S)

These systems are illustrated below for comparative purposes in the following figure.

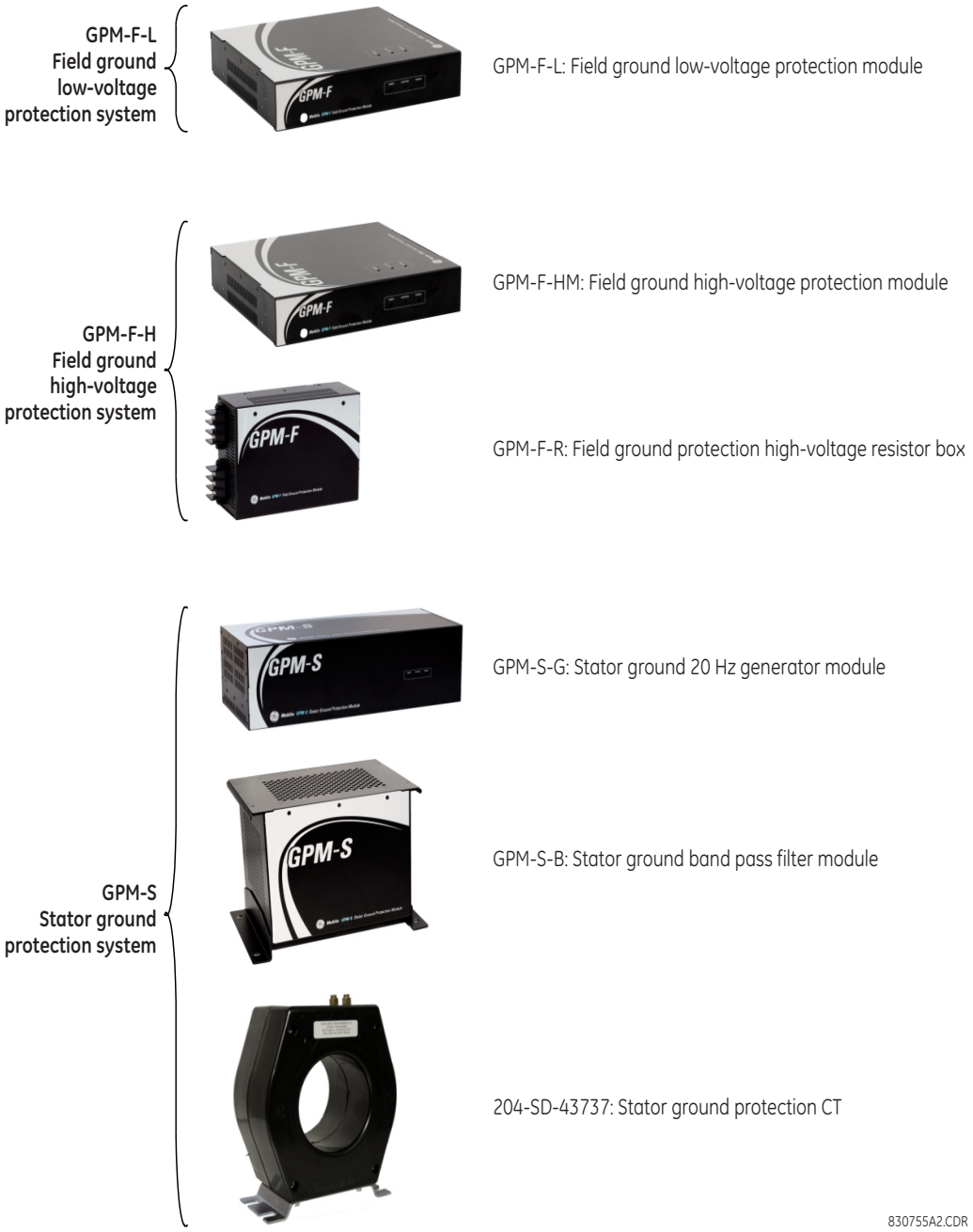

Figure 3–56: GENERATOR GROUND PROTECTION COMPONENTS

3.4.2 FIELD GROUND LOW-VOLTAGE PROTECTION SYSTEM

The field ground low voltage protection system consists of one module: the field ground protection low-voltage module (GPM-F-L). The following figures show the mounting and dimension (all dimensions are in inches).

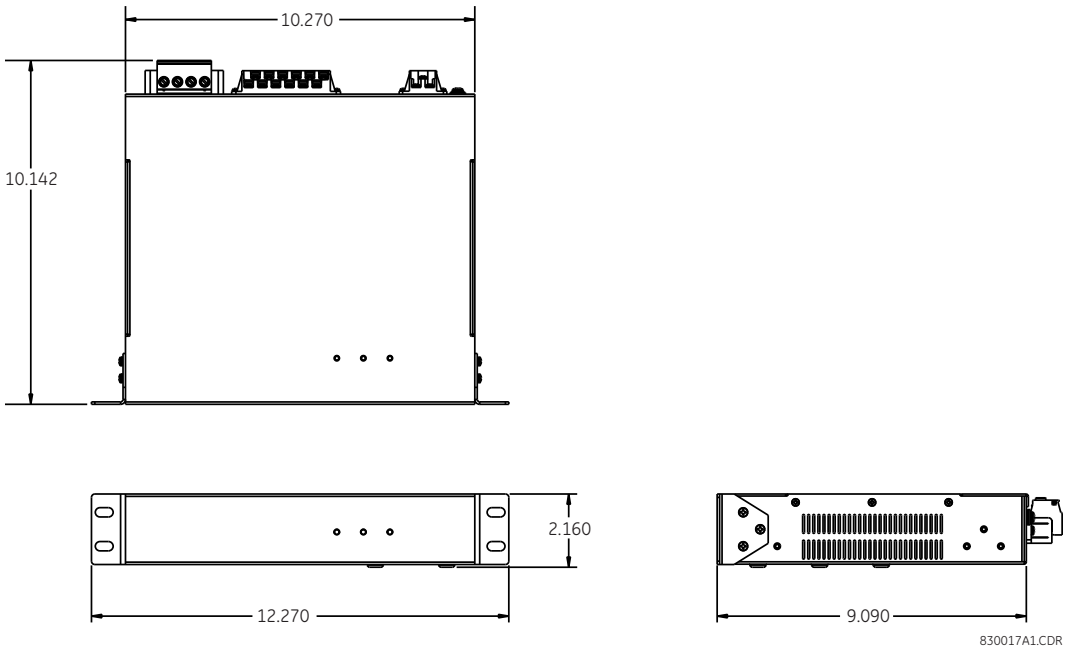

Figure 3–57: DIMENSIONS FOR GPM-F-L PANEL-MOUNTED UNIT

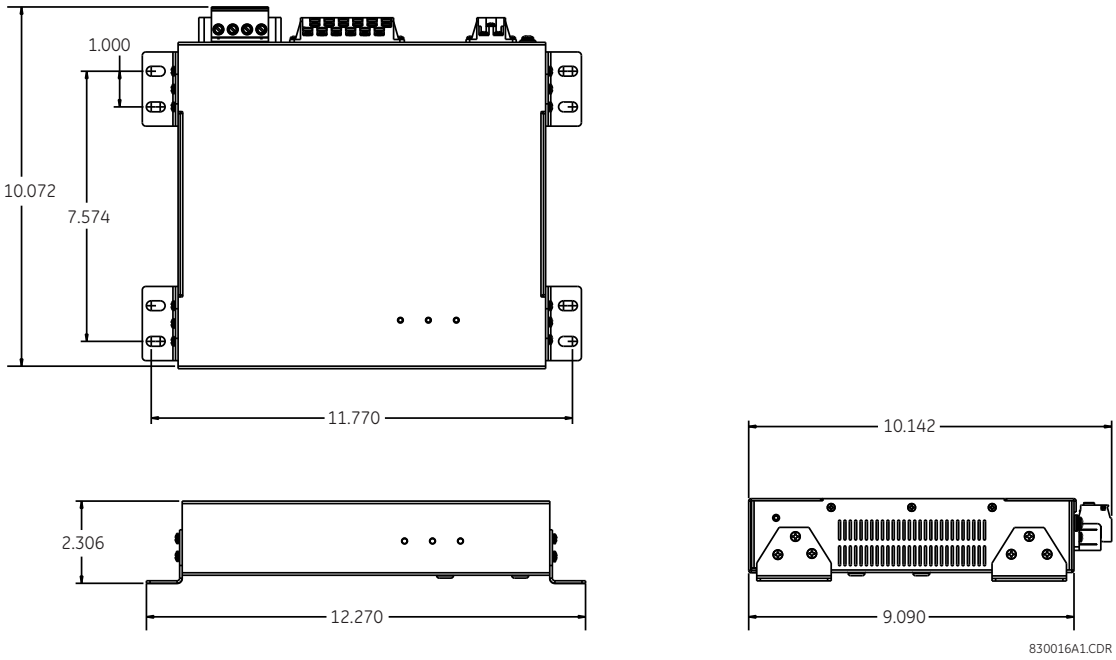

Figure 3–58: DIMENSIONS FOR GPM-F-L WALL-MOUNTED UNIT

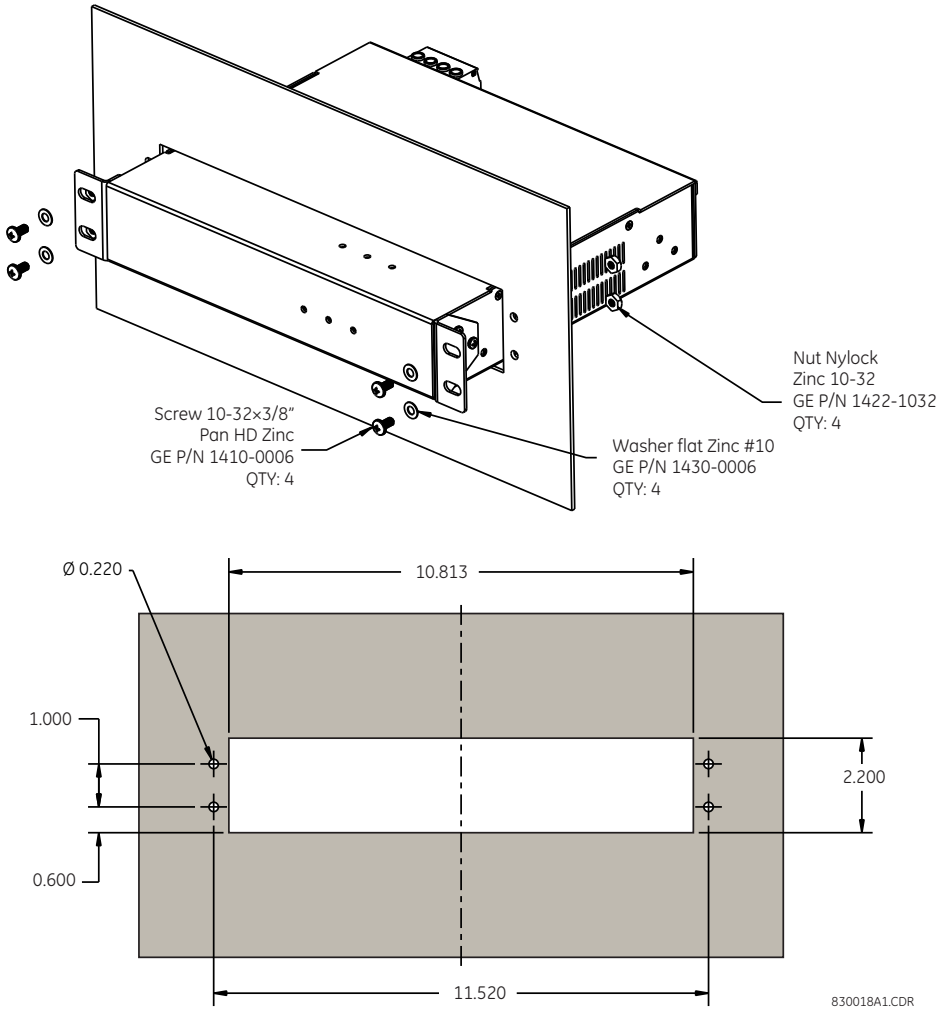

Figure 3–59: MOUNTING DIAGRAM FOR GPM-F-L PANEL-MOUNTED UNIT

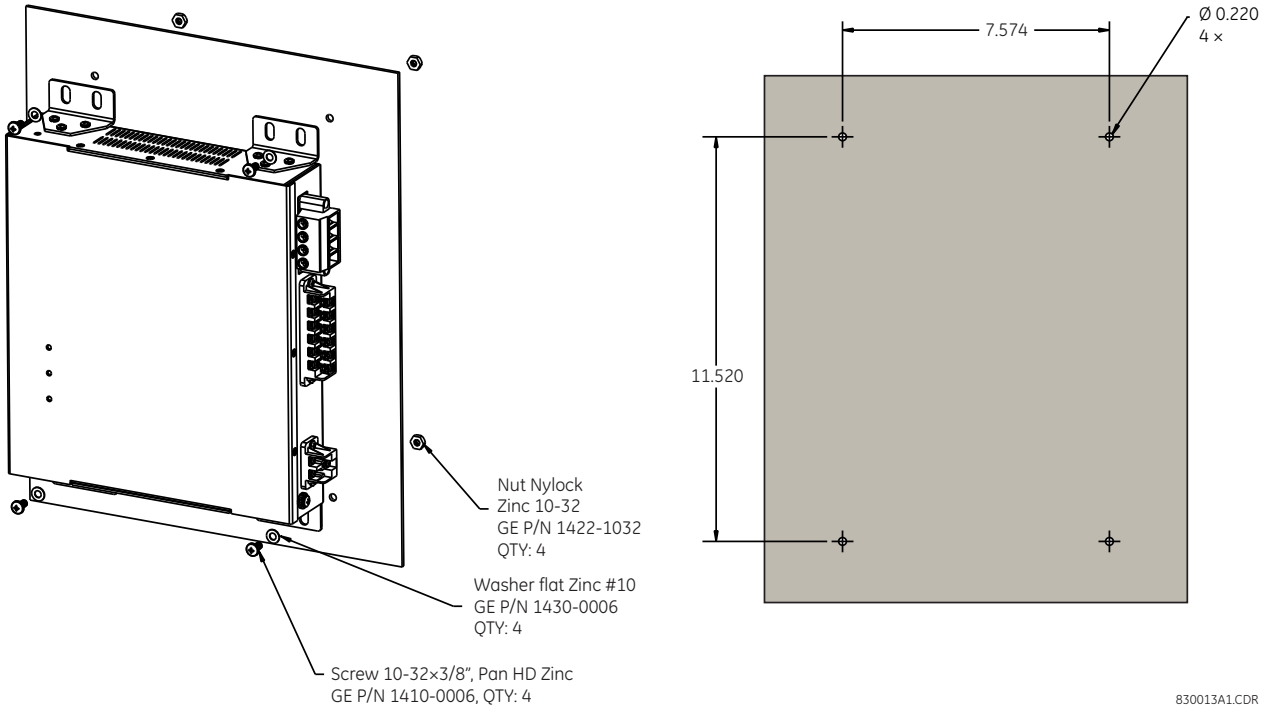

Figure 3–60: MOUNTING DIAGRAM FOR GPM-F-L WALL-MOUNTED UNIT

There are three connectors on the field protection low-voltage module as shown in the following figure.

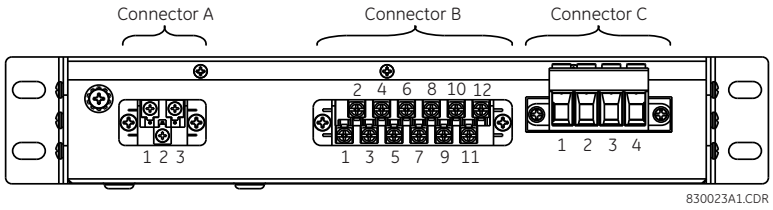

Figure 3–61: REAR VIEW OF GPM-F-L MODULE SHOWING TERMINAL BLOCKS

The following tables outline the pin assignments.

Table 3–6: GPM-F-L PIN ASSIGNMENTS FOR CONNECTOR A

PIN	LABEL	DEFINITION
1	L(+)	AC-L (DC+)
2	N(–)	AC-N (DC–)
3	GND	Ground

Table 3–7: GPM-F-L PIN ASSIGNMENTS FOR CONNECTOR B

PIN	LABEL	DEFINITION
1	CH1(+)	RS485 channel 1 positive
2	CH1(–)	RS485 channel 1 negative
3	COM	RS485 common
4	CH2(+)	RS485 channel 2 positive
5	CH2(–)	RS485 channel 2 negative
6	IN3	Contact input 3
7	IN2	Contact input 2
8	IN1	Contact input 1
9	COM	Contact input common
10	NC	Relay NC (normally closed)
11	COM	Relay common
12	NO	Relay NO (normally open)

Three contact inputs are provided. Upon closure of any one of the contact inputs, low frequency injection stops.

Table 3–8: GPM-F-L PIN ASSIGNMENTS FOR CONNECTOR C

PIN	LABEL	DEFINITION
1	FGND	Field ground
2	F1	Injection to excitation positive
3	F(–)	Injection to excitation negative / excitation negative
4	F(+)	Excitation positive

The following figure illustrates how to wire the GPM-F-L module for both single-point injection and double-point injection.

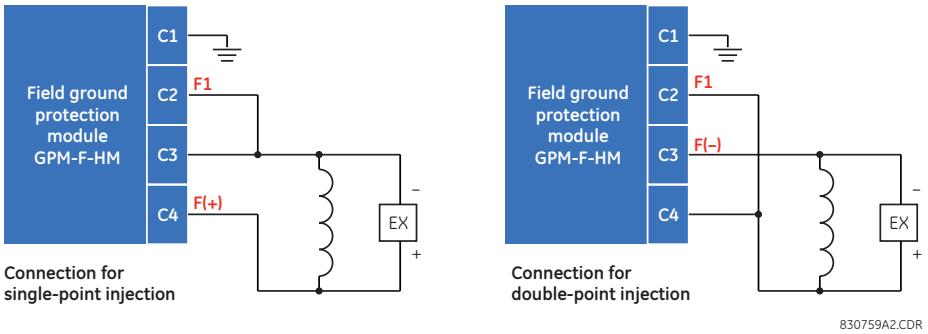

Figure 3–62: CONNECTING THE FIELD GROUND PROTECTION MODULE

3.4.3 FIELD GROUND HIGH-VOLTAGE PROTECTION SYSTEM

The field ground high-voltage protection system consists of two modules: the field ground protection high-voltage module (GPM-F-HM) and the field ground protection high-voltage resistor box (GPM-F-R). The following figures show the mounting and dimensions (all dimensions are in inches).

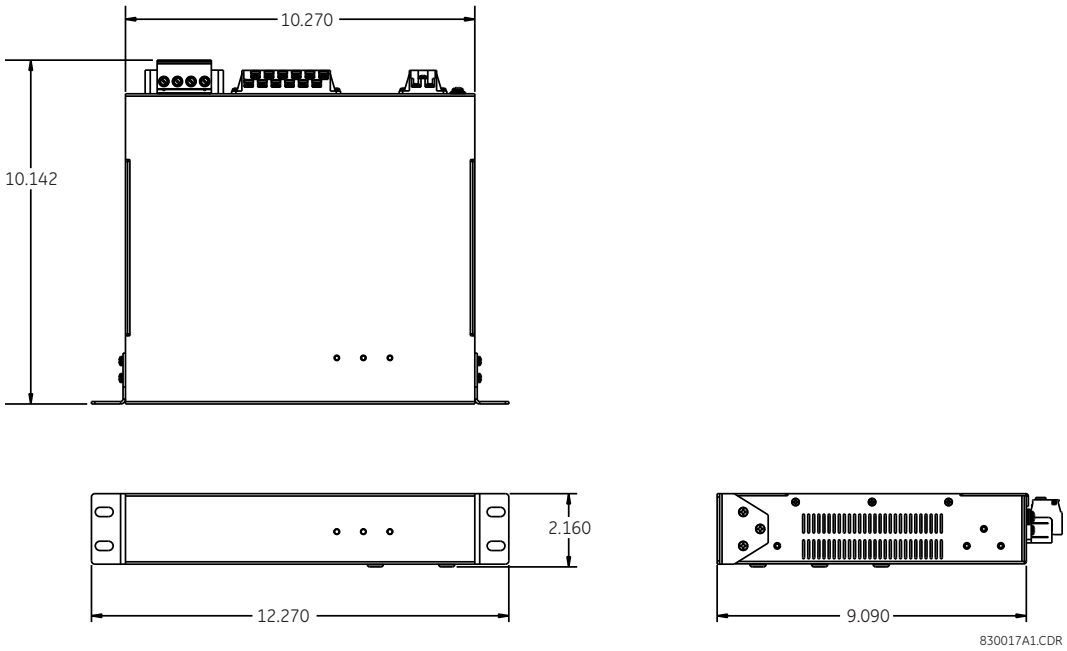

Figure 3–63: DIMENSIONS FOR GPM-F-HM PANEL-MOUNTED UNIT

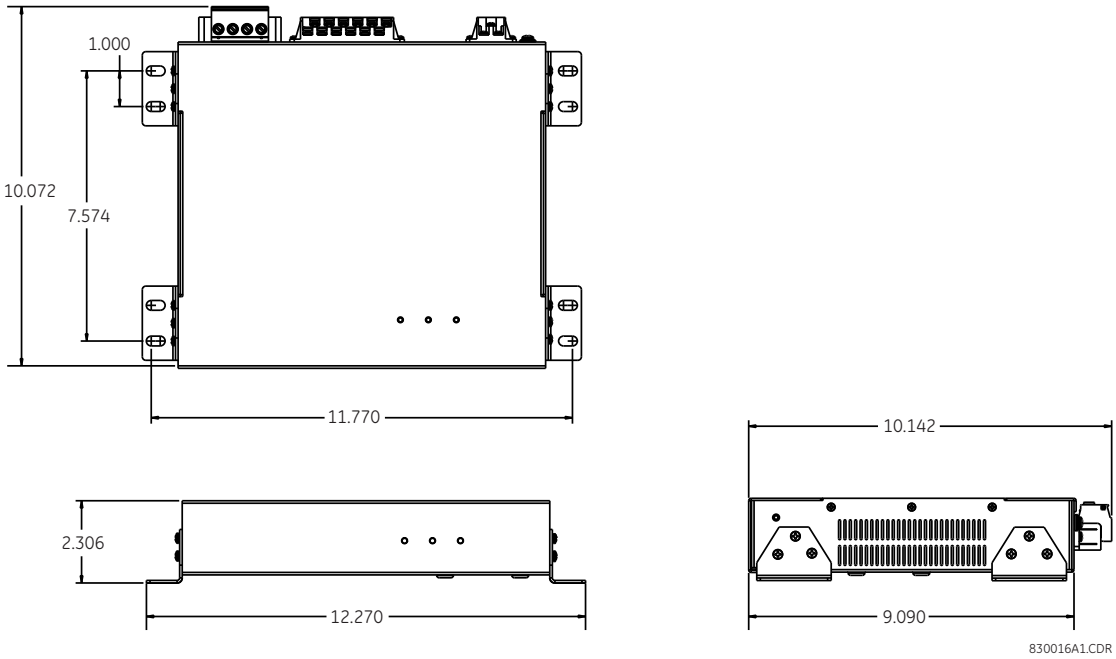

Figure 3–64: DIMENSIONS FOR GPM-F-HM WALL-MOUNTED UNIT

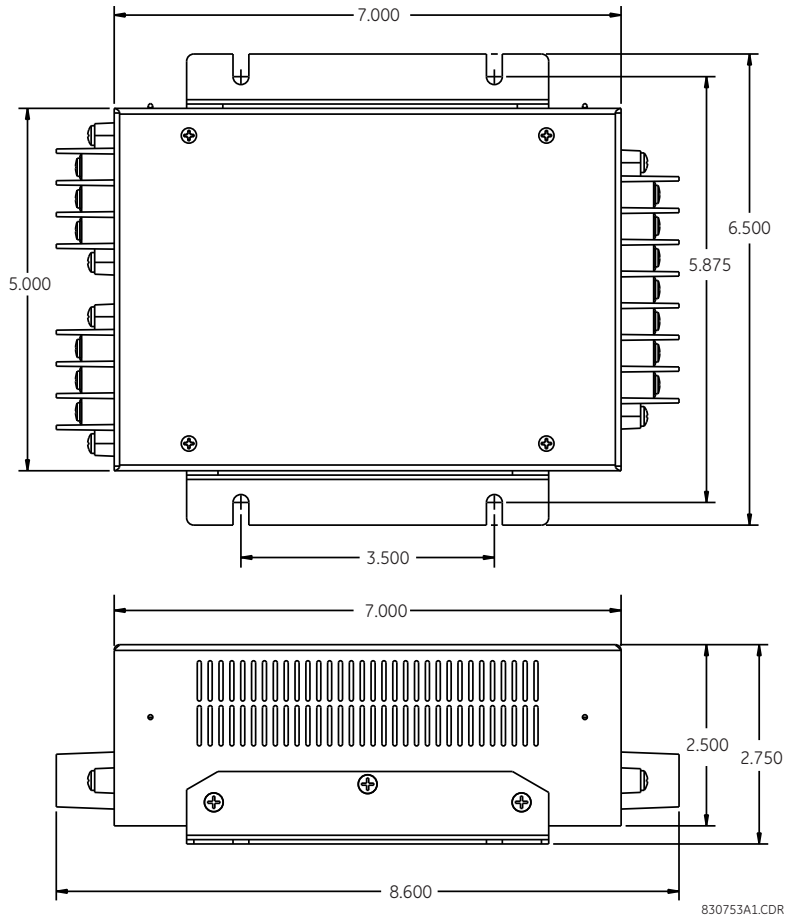

Figure 3–65: DIMENSIONS FOR GPM-F-R HIGH-VOLTAGE RESISTOR BOX

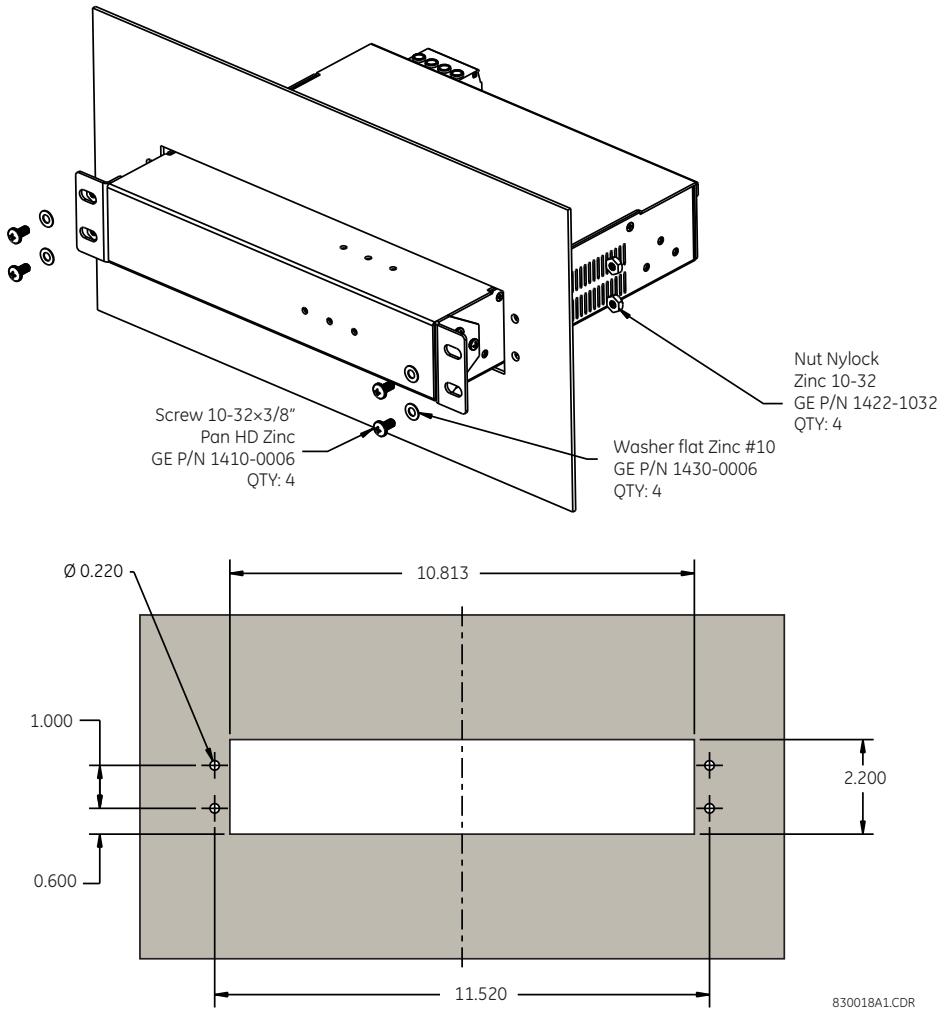

Figure 3–66: MOUNTING DIAGRAM FOR GPM-F-HM PANEL-MOUNTED UNIT

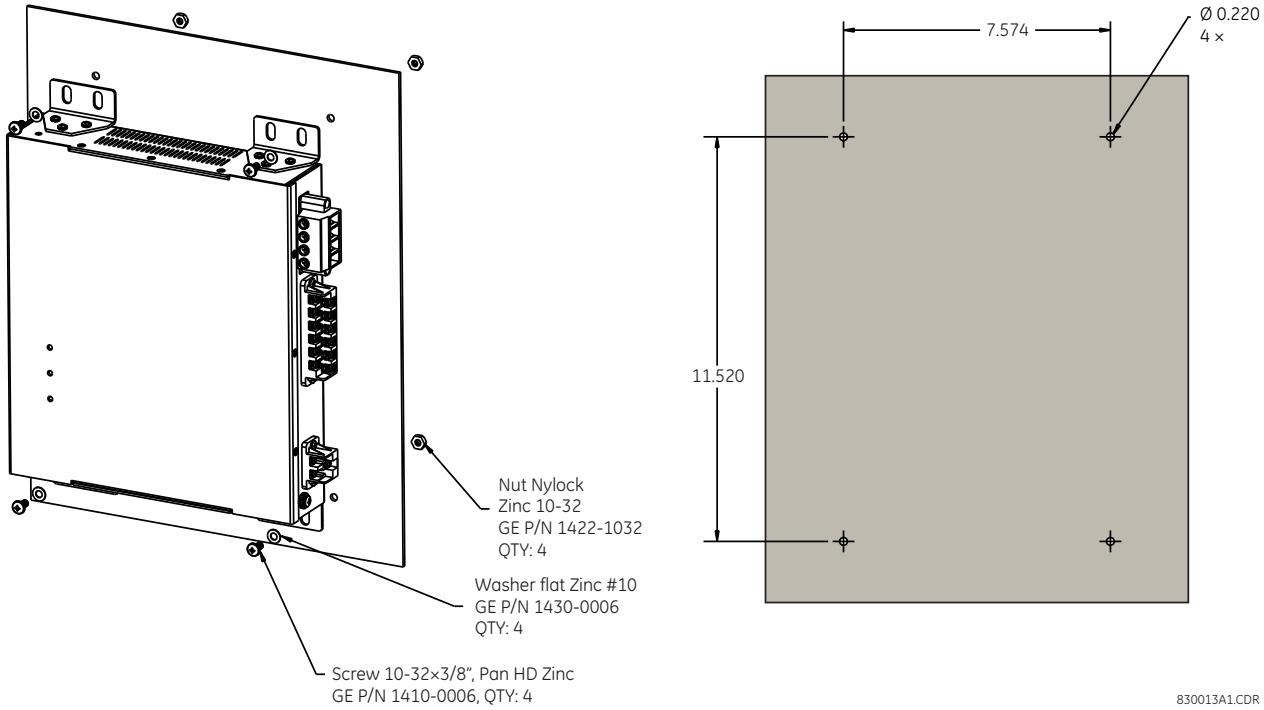

Figure 3–67: MOUNTING DIAGRAM FOR GPM-F-HM WALL-MOUNTED UNIT

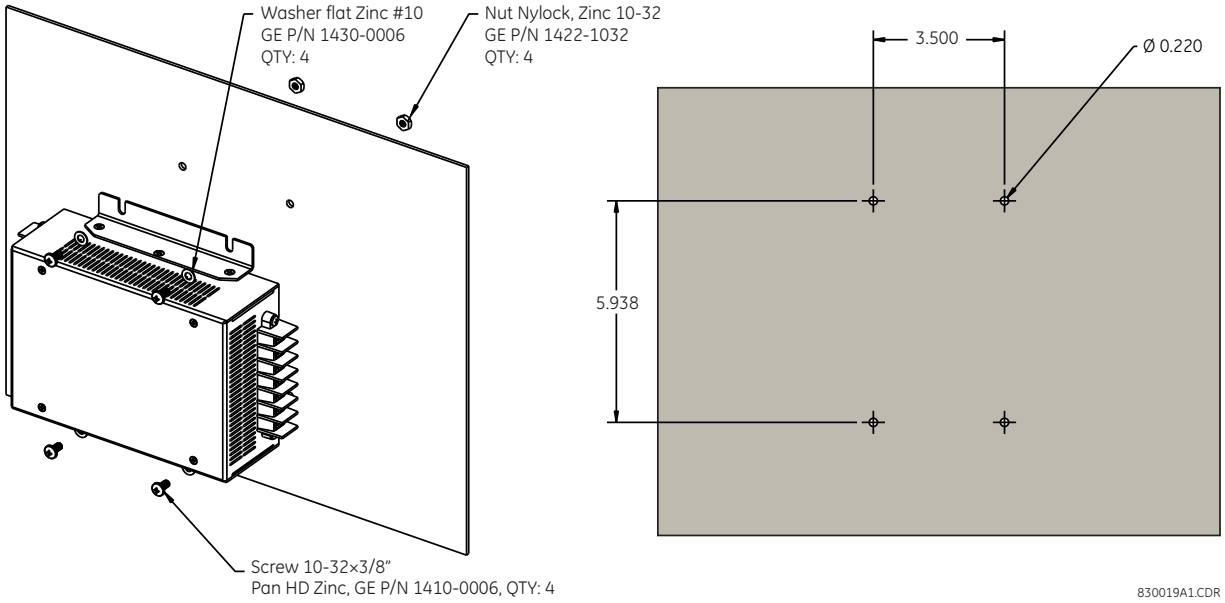

Figure 3–68: MOUNTING DIAGRAM FOR GPM-F-R HIGH-VOLTAGE RESISTOR BOX

There are three connectors on the field ground protection high-voltage module as shown in the following figure.

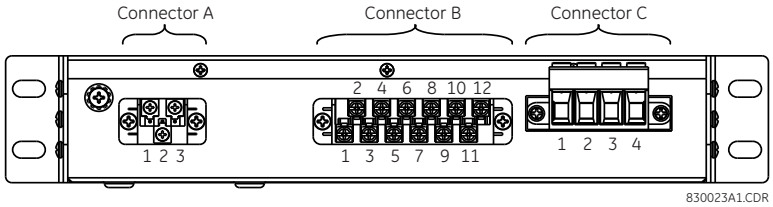

Figure 3–69: REAR VIEW OF GPM-F-HM MODULE SHOWING TERMINAL BLOCKS

The following tables outline the pin assignments.

Table 3–9: GPM-F-HM PIN ASSIGNMENTS FOR CONNECTOR A

PIN	LABEL	DEFINITION
1	L(+)	AC-L (DC+)
2	N(–)	AC-N (DC–)
3	GND	Ground

Table 3–10: GPM-F-HM PIN ASSIGNMENTS FOR CONNECTOR B

PIN	LABEL	DEFINITION
1	CH1(+)	RS485 channel 1 positive
2	CH1(–)	RS485 channel 1 negative
3	COM	RS485 common
4	CH2(+)	RS485 channel 2 positive
5	CH2(–)	RS485 channel 2 negative
6	IN3	Contact input 3
7	IN2	Contact input 2
8	IN1	Contact input 1
9	COM	Contact input common
10	NC	Relay NC (normally closed)
11	COM	Relay common
12	NO	Relay NO (normally open)

Three contact inputs are provided. Upon closure of any one of the contact inputs, low frequency injection stops.

Table 3–11: GPM-F-HM PIN ASSIGNMENTS FOR CONNECTOR C

PIN	LABEL	DEFINITION
1	FGND	Field ground
2	F1	Injection to excitation positive
3	F(–)	Injection to excitation negative / excitation negative
4	F(+)	Excitation positive

There are three connectors on the field ground protection high-voltage resistor box, as shown in the following figure.

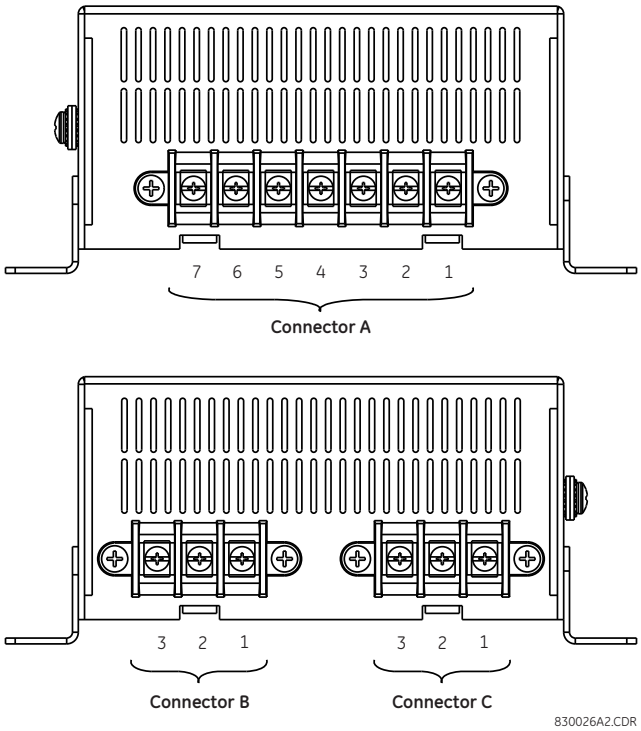

Figure 3–70: GPM-F-R MODULE SHOWING TERMINAL BLOCKS

The following tables outline the pin assignments.

Table 3–12: GPM-F-R PIN ASSIGNMENTS FOR CONNECTOR A

PIN	LABEL	DEFINITION
1	A1	Not used
2	A2	Not used
3	A3	Injection secondary (F1)
4	A4	Not used
5	A5	Excitation secondary negative (F–)
6	A6	Not used
7	A7	Excitation secondary positive (F+)

Table 3–13: GPM-F-R PIN ASSIGNMENTS FOR CONNECTOR B

PIN	LABEL	DEFINITION
1	B1	Excitation primary positive (F2+)
2	B2	Not used
3	B3	Injection to excitation positive (F2)

Table 3–14: GPM-F-R PIN ASSIGNMENTS FOR CONNECTOR C

PIN	LABEL	DEFINITION
1	C1	Injection to excitation negative / excitation primary negative (F2–)
2	C2	Not used
3	C3	Not used

The following figure illustrates how to wire the GPM-F-HM module with the GPM-F-R resistor box for both single-point injection and double-point injection. To connect the units:

1. Externally short terminals C1 and C3 of the GPM-F-R high-voltage resistor box for both single-point injection and double-point injection.
2. Shield the connection between F1 (terminal C2) on the GPM-F-HM field ground protection module and terminal A3 on the GPM-F-R high-voltage resistor box module. Keep the connection length as short as possible, and do not exceed 10 meters.
3. Shield the connection between the F+ and F– pair (terminals C3 and C4) on the GPM-F-HM field ground protection module and terminals A5 and A7 on the GPM-F-R high-voltage resistor box module. Keep the length as short as possible, and do not exceed 10 meters.

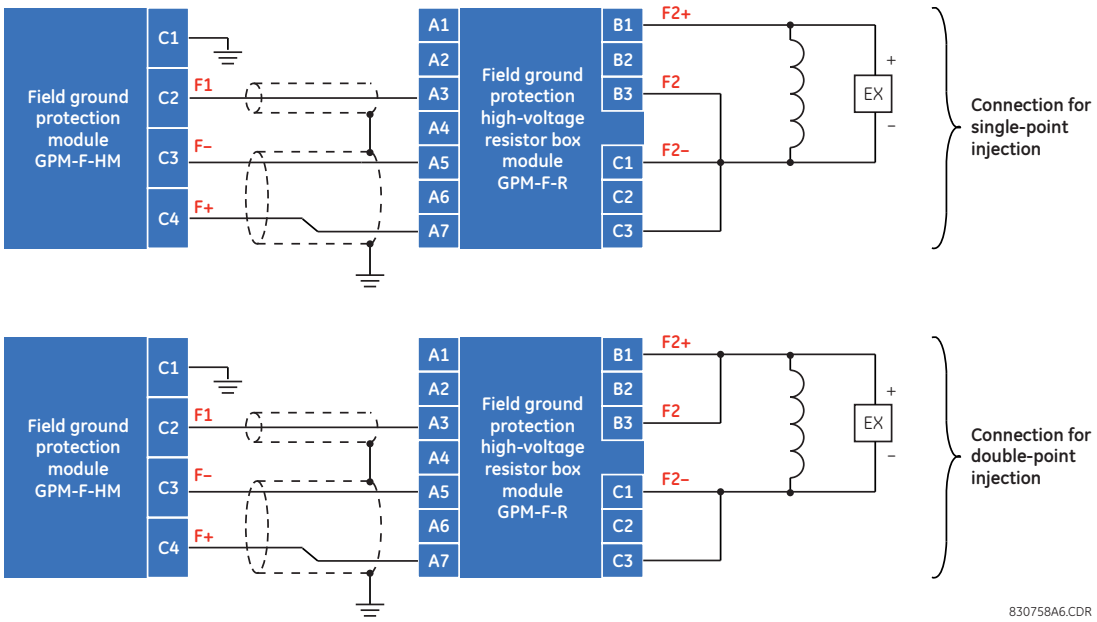

Figure 3–71: CONNECTING THE FIELD GROUND PROTECTION MODULE TO THE HIGH-VOLTAGE RESISTOR BOX

3.4.4 STATOR GROUND PROTECTION SYSTEM

Using 100% stator ground fault protection based on sub-harmonic injection, a 20 Hz voltage is injected to detect ground faults at any point across 100% of the winding. The stator ground module works in combination the G60 to provide 100% stator ground fault protection that is operational during generator start-up, running, and stopped conditions.

The stator ground protection system consists of three modules: the stator ground protection 20 Hz generator module (GPM-S-G), the stator ground band pass filter module (GPM-S-B), and the stator ground protection CT (204-SD-43737). The following figures show the mounting and dimensions (all dimensions are in inches).

With GPM-S, use a CT/VT module with Sensitive Ground capability (for example 8G, 8J, 8M, 8R) to connect stator ground protection CT (204-SD-43737) input to the UR device.

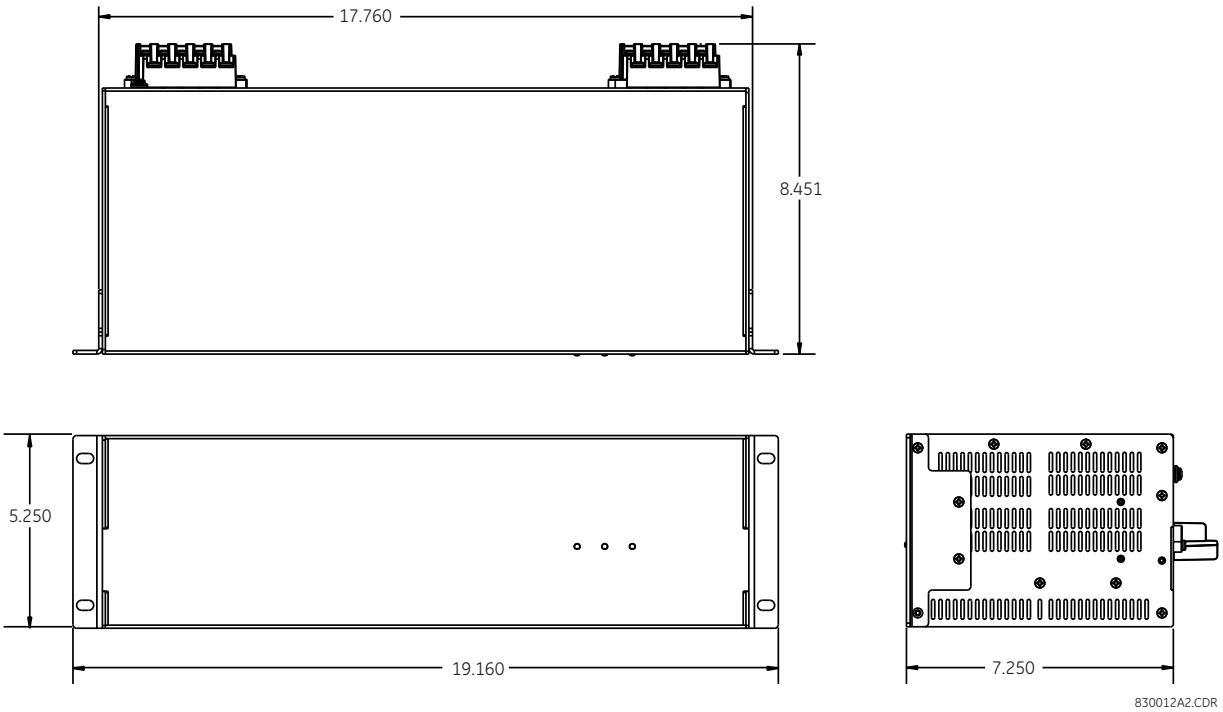

Figure 3–72: DIMENSIONS FOR GPM-S-G PANEL-MOUNTED UNIT

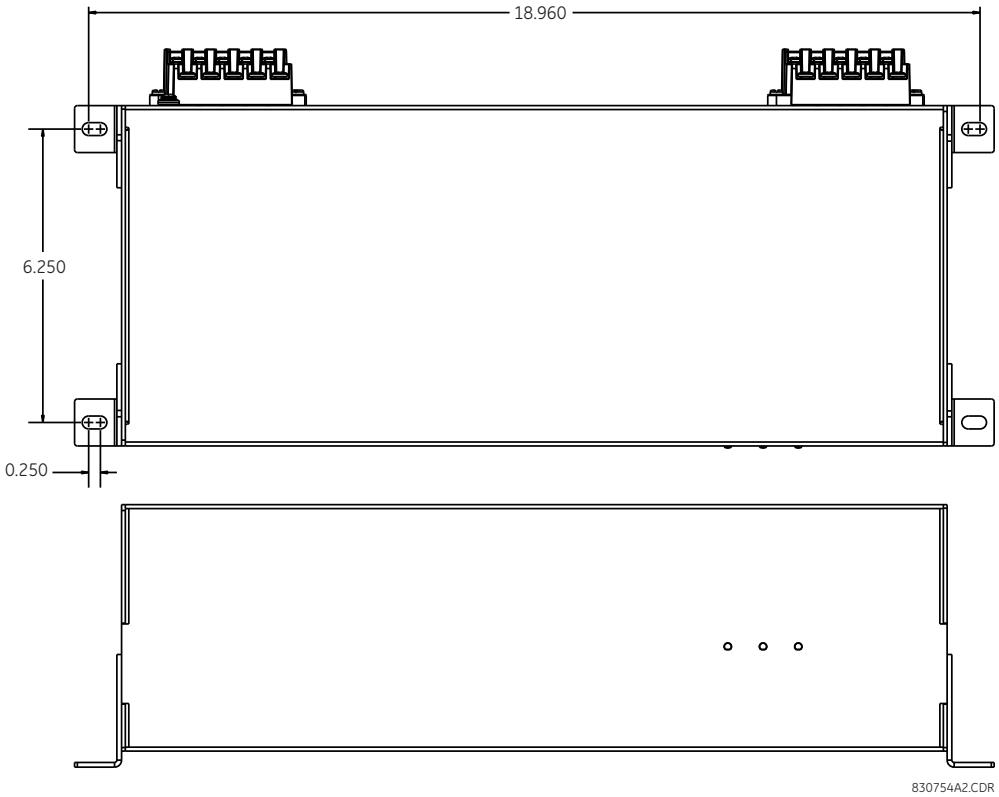

Figure 3–73: DIMENSIONS FOR GPM-S-G WALL-MOUNTED UNIT

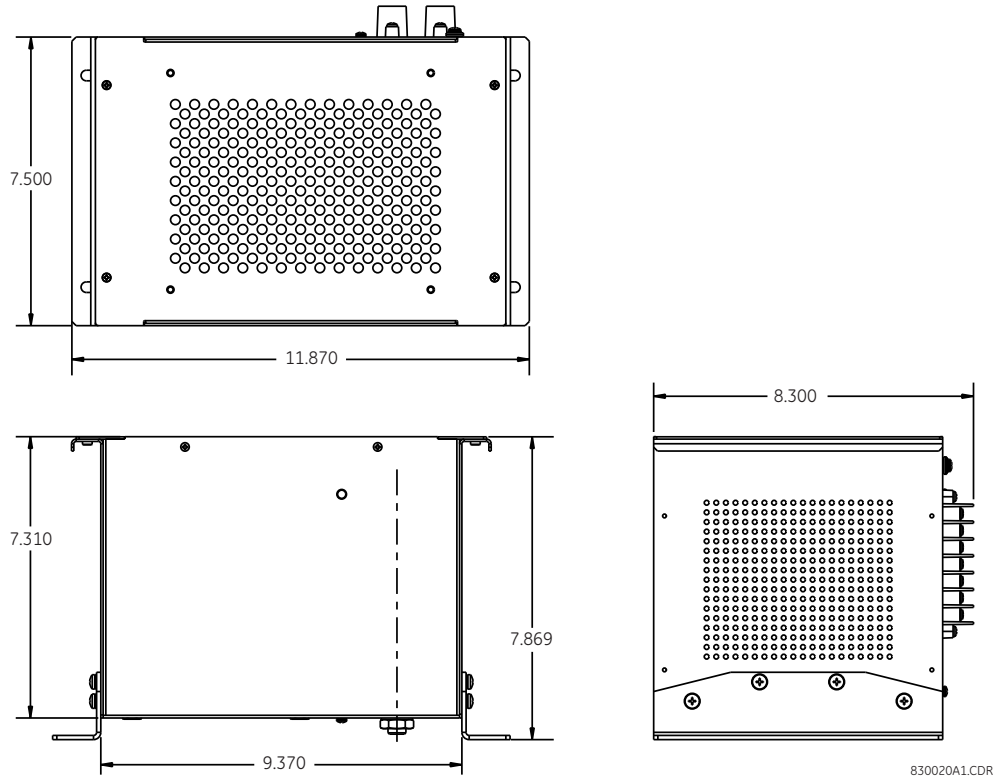

Figure 3–74: DIMENSIONS FOR GPM-S-B BAND PASS FILTER MODULE

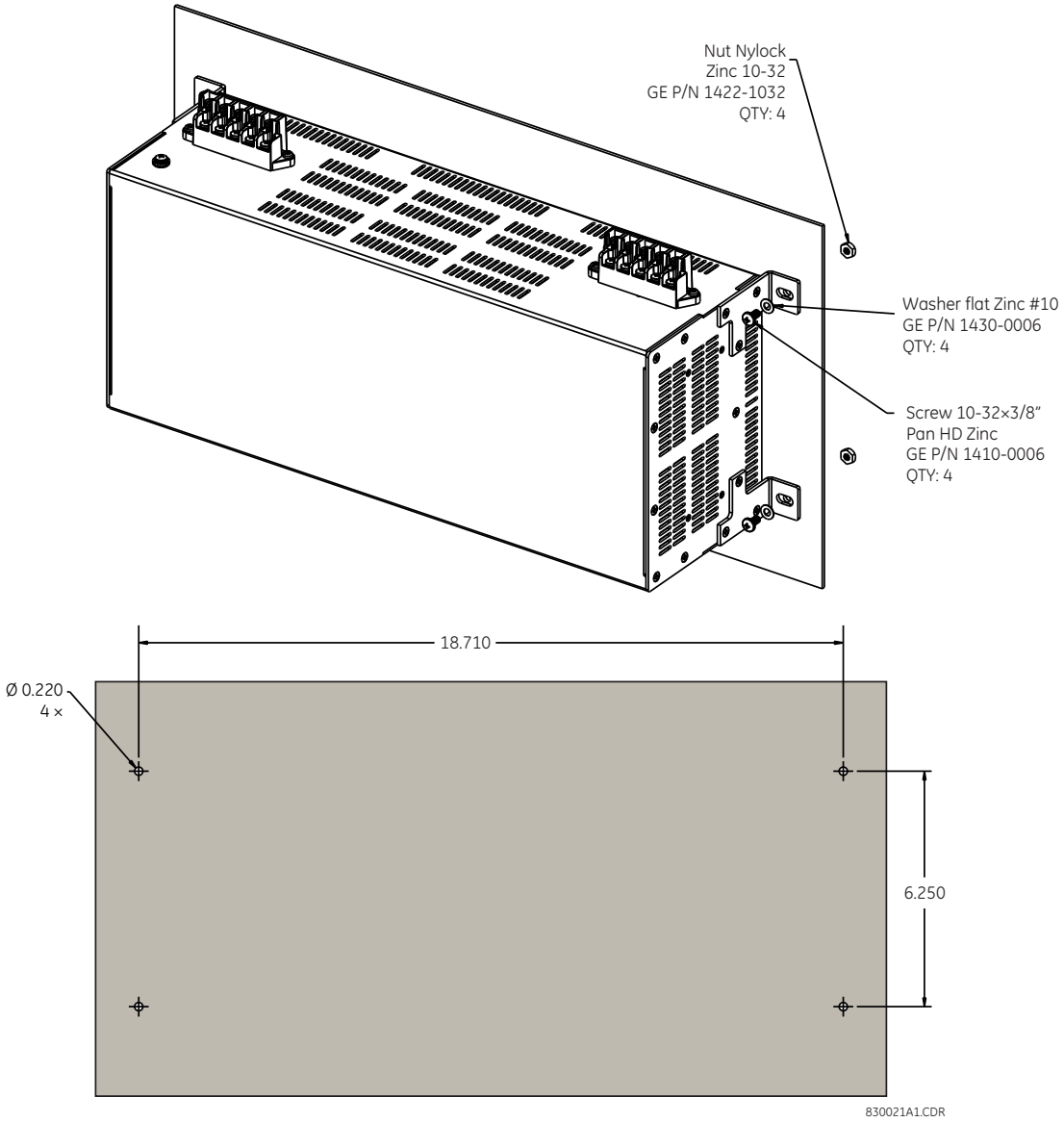

Figure 3–75: MOUNTING DIAGRAM FOR GPM-S-G PANEL-MOUNTED UNIT

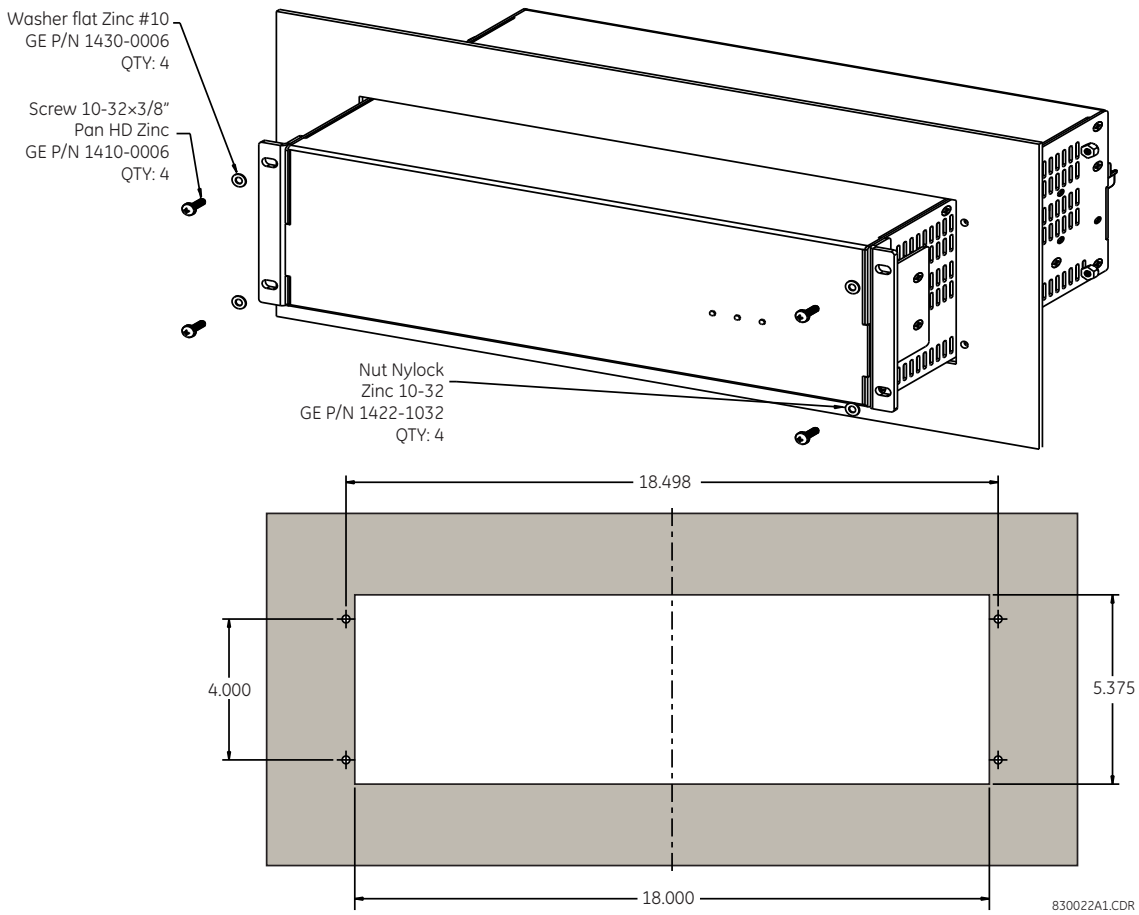

Figure 3–76: MOUNTING DIAGRAM FOR GPM-S-G WALL-MOUNTED UNIT

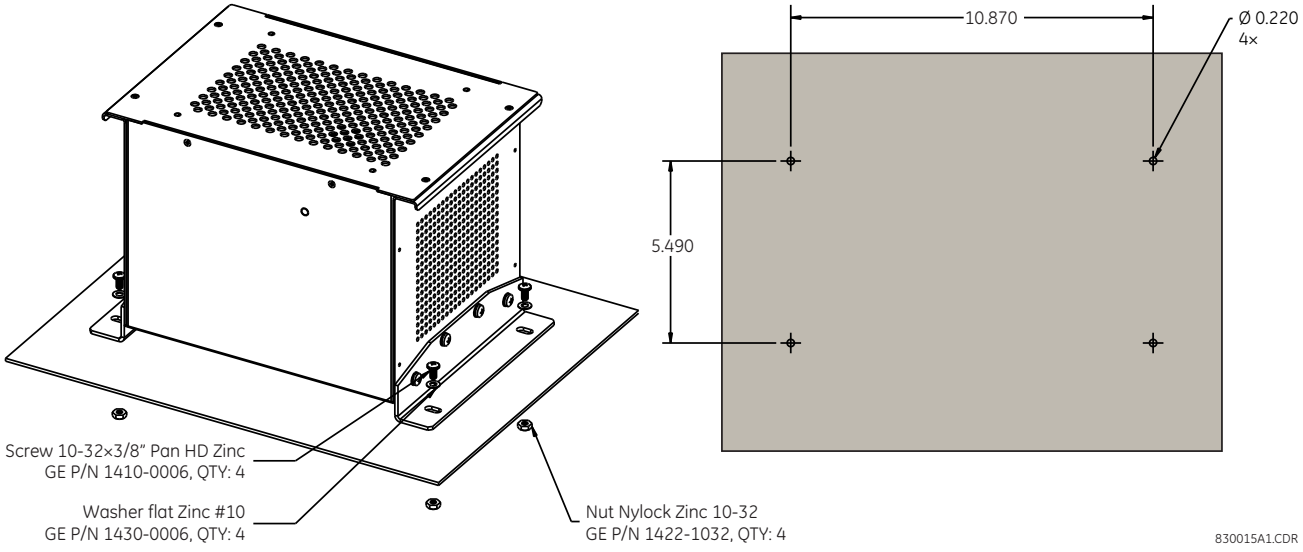

Figure 3–77: MOUNTING DIAGRAM FOR GPM-S-B BAND PASS FILTER MODULE

There are two connectors on the stator ground protection 20 Hz generator module, as shown in the following figure.

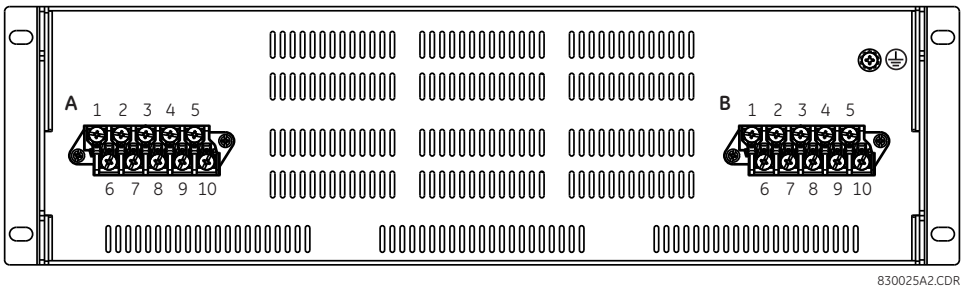

Figure 3–78: REAR VIEW OF GPM-S-G MODULE SHOWING TERMINAL BLOCKS

The following tables outline the pin assignments for the stator ground 20 Hz generator module. Two contact inputs are provided. Upon closure of any one of the contact inputs, 20 Hz injection stops.

Table 3–15: GPM-S-G PIN ASSIGNMENTS FOR CONNECTOR A

PIN	LABEL	DEFINITION
1	A1	Contact input 1
2	A2	Contact input 2
3	A3	Alarm relay NC (normally closed)
4	A4	Not used
5	A5	Output 1
6	A6	Contact input common
7	A7	Alarm relay NO (normally open)
8	A8	Alarm relay common
9	A9	Not used
10	A10	Output 2

Table 3–16: GPM-S-G PIN ASSIGNMENTS FOR CONNECTOR B

PIN	LABEL	DEFINITION
1	B1	Not used
2	B2	Not used
3	B3	Not used
4	B4	Not used
5	B5	Not used
6	B6	Not used
7	B7	Not used
8	B8	Ground
9	B9	Power neutral / DC negative
10	B10	Power line / DC positive

There are two connectors on the stator ground protection band pass filter module, as shown in the following figure.

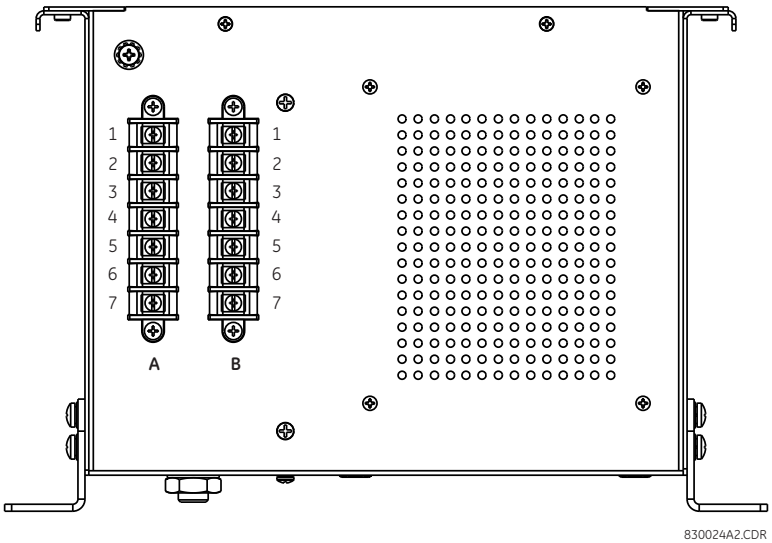

Figure 3–79: GPM-S-B MODULE SHOWING TERMINAL BLOCKS

The following tables outline the pin assignments.

Table 3–17: GPM-S-B PIN ASSIGNMENTS FOR CONNECTOR A

PIN	LABEL	DEFINITION
1	A1	Input 1
2	A2	Not used
3	A3	Input 2
4	A4	Not used
5	A5	Reserved
6	A6	Divider out
7	A7	Divider low

Table 3–18: GPM-S-B PIN ASSIGNMENTS FOR CONNECTOR B

PIN	LABEL	DEFINITION
1	B1	Output 1
2	B2	Not used
3	B3	Output 2
4	B4	Not used
5	B5	Reserved
6	B6	Divider high
7	B7	Divider low

The following figure illustrates how to connect the stator ground 20 Hz generator module with the band pass filter module where the neutral grounding transformer (NGT) secondary voltage is less than or equal to 240 V.

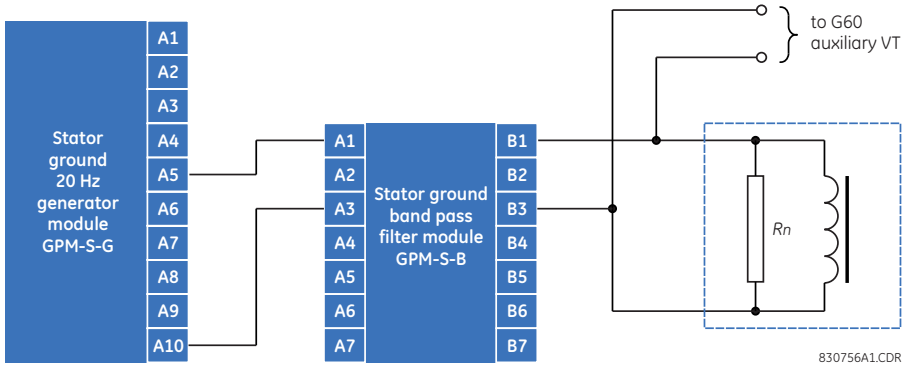

Figure 3–80: STATOR GROUND PROTECTION SYSTEM CONNECTIONS (NGT SECONDARY ≤ 240 V)

The following figure illustrates how to connect the stator ground 20 Hz generator module with the band pass filter module where the NGT secondary voltage is greater than 240 V.

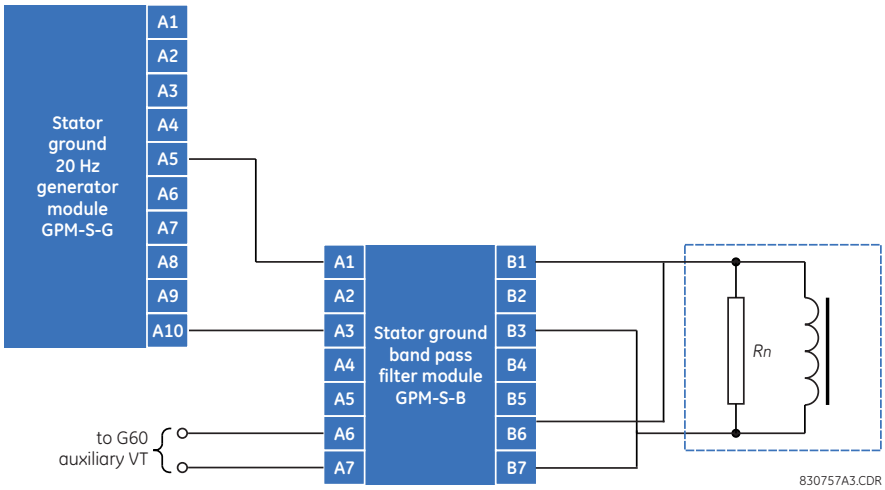

Figure 3–81: STATOR GROUND PROTECTION SYSTEM CONNECTIONS (NGT SECONDARY > 240 V)

3.4.5 UPGRADING FIRMWARE

a) UPGRADING THE GPM-F FIRMWARE

The following procedure describes how the upgrade the firmware for the GPM-F modules. Do the upgrade using the front port and one of the computer COM ports 1 to 4.

1. Open the G60 device so that it appears in the online window.
2. Select the **Maintenance > Update GPM-F Firmware** tree node.

   The following dialog will appear which allows the user to browse to the location of the firmware file.
3. Click **Open** to start the firmware upgrade process will start.

Note that this process will also work for a serial-port device but will take a longer time to complete (approximately 5 minutes).

4.1.1 INTRODUCTION

The EnerVista UR Setup software provides a graphical user interface (GUI) as one of two human interfaces to a UR device. The alternate human interface is implemented via the device's faceplate keypad and display (see the Faceplate Interface section in this chapter).

The EnerVista UR Setup software provides a single facility to configure, monitor, maintain, and troubleshoot the operation of relay functions, connected over local or wide-area networks. It can be used while disconnected (offline) or connected (online) to a UR device. In offline mode, settings files can be created for eventual downloading to the device. In online mode, communication with the device is real-time.

The EnerVista UR Setup software is provided with every G60 relay and runs on Microsoft Windows XP, 7, and Server 2008. This chapter provides a summary of the basic EnerVista UR Setup software interface features. The EnerVista UR Setup Help File provides details for getting started and using the EnerVista UR Setup software interface.

4.1.2 CREATING A SITE LIST

To start using the EnerVista UR Setup software, site and device definition are required. See the EnerVista UR Setup Help File or refer to the EnerVista UR Setup Software section in Chapter 1 for details.

4.1.3 ENERVISTA UR SETUP OVERVIEW

a) ENGAGING A DEVICE

The EnerVista UR Setup software can be used in online mode (relay connected) to directly communicate with the G60 relay. Communicating relays are organized and grouped by communication interfaces and into sites. Sites can contain any number of relays selected from the UR-series of relays.

b) USING SETTINGS FILES

The EnerVista UR Setup software interface supports three ways of handling changes to relay settings:

- In offline mode (relay disconnected) to create or edit relay settings files for later download to communicating relays
- While connected to a relay to modify relay settings, and then save the settings to the relay
- You can create/edit settings files and then write them to the relay while the interface is connected to the relay

Settings files are organized on the basis of file names assigned by the user. A settings file contains data pertaining to the following types of relay settings:

- Device definition
- Product setup
- System setup
- FlexLogic
- Grouped elements
- Control elements
- Inputs/outputs
- Remote resources
- Testing

Factory default values are supplied and can be restored after any changes.

The following communications settings are not transferred to the G60 with settings files:

Modbus Slave Address
Modbus TCP Port Number
RS485 COM2 Baud Rate
RS485 COM2 Parity
COM2 Minimum Response Time

COM2 Selection
RRTD Slave Address
RRTD Baud Rate
IP Address
IP Subnet Mask
IP Routing

When a settings file is loaded to a G60 that is in-service, the following sequence occurs:

1. The G60 takes itself out of service.
2. The G60 issues a **UNIT NOT PROGRAMMED** major self-test error.
3. The G60 closes the critical fail contact.

c) CREATING AND EDITING FLEXLOGIC

You create or edit a FlexLogic equation in order to customize the relay. You can subsequently view the automatically generated logic diagram.

d) VIEWING ACTUAL VALUES

You can view real-time relay data such as input/output status and measured parameters.

e) VIEWING TRIGGERED EVENTS

While the interface is in either online or offline mode, you can view and analyze data generated by triggered specified parameters, via one of the following:

- **Event recorder**

  The event recorder captures contextual data associated with the last 1024 events, listed in chronological order from most recent to oldest.

- **Oscillography**

  The oscillography waveform traces and digital states are used to provide a visual display of power system and relay operation data captured during specific triggered events.

f) FILE SUPPORT

- **Execution:** Any EnerVista UR Setup file that is opened launches the application or provides focus to the already opened application. If the file was a settings file (has a `URS` extension) that had been removed from the Settings List tree menu, it is added back to the Settings List tree menu.
- **Drag and Drop:** The Site List and Settings List control bar windows are each mutually a drag source and a drop target for device-order-code-compatible files or individual menu items. Also, the Settings List control bar window and any Windows Explorer directory folder are each mutually a file drag source and drop target.

  New files that are dropped into the Settings List window are added to the tree, which is automatically sorted alphabetically with respect to settings file names. Files or individual menu items that are dropped in the selected device menu in the Site List window are automatically sent to the online communicating device.

g) FIRMWARE UPGRADES

The firmware of a G60 device can be upgraded, locally or remotely, via the EnerVista UR Setup software. The corresponding instructions are provided by the EnerVista UR Setup Help file under the topic “Upgrading Firmware”.

If you are upgrading from version 7.0 or 7.1 to 7.2 or later, some CPU modules require a new boot version. Update this first in EnerVista under **Maintenance > Update Firmware**. Ensure that power to the unit is not lost during this update.

Before backing up settings and upgrading, set the **Settings > Product Setup > Security > Dual Permission Security Access > Remote Setting Authorized** and **Local Setting Authorized** settings to "ON." Otherwise, the upgrade is blocked and results in an "Unable to put relay in flash mode" message.

If using CyberSentry security, also ensure that the relay and firmware are not locked under the **Settings > Product Setup > Security > Supervisory** settings. A Supervisor role is required for these settings.

NOTE

Modbus addresses assigned to firmware modules, features, settings, and corresponding data items (that is, default values, minimum/maximum values, data type, and item size) can change slightly from version to version of firmware. The addresses are rearranged when new features are added or existing features are enhanced or modified. The **EEPROM DATA ERROR** message displayed after upgrading/downgrading the firmware is a resettable, self-test message intended to inform users that the Modbus addresses have changed with the upgraded firmware. This message does not signal any problems when appearing after firmware upgrades.

4.1.4 ENERVISTA UR SETUP MAIN WINDOW

The EnerVista UR Setup software main window supports the following primary display components:

1. Title bar that shows the pathname of the active data view
2. Main window menu bar
3. Main window tool bar
4. Site list control bar window
5. Settings list control bar window
6. Device data view windows, with common tool bar
7. Settings file data view windows, with common tool bar
8. Workspace area with data view tabs
9. Status bar
10. Quick action hot links

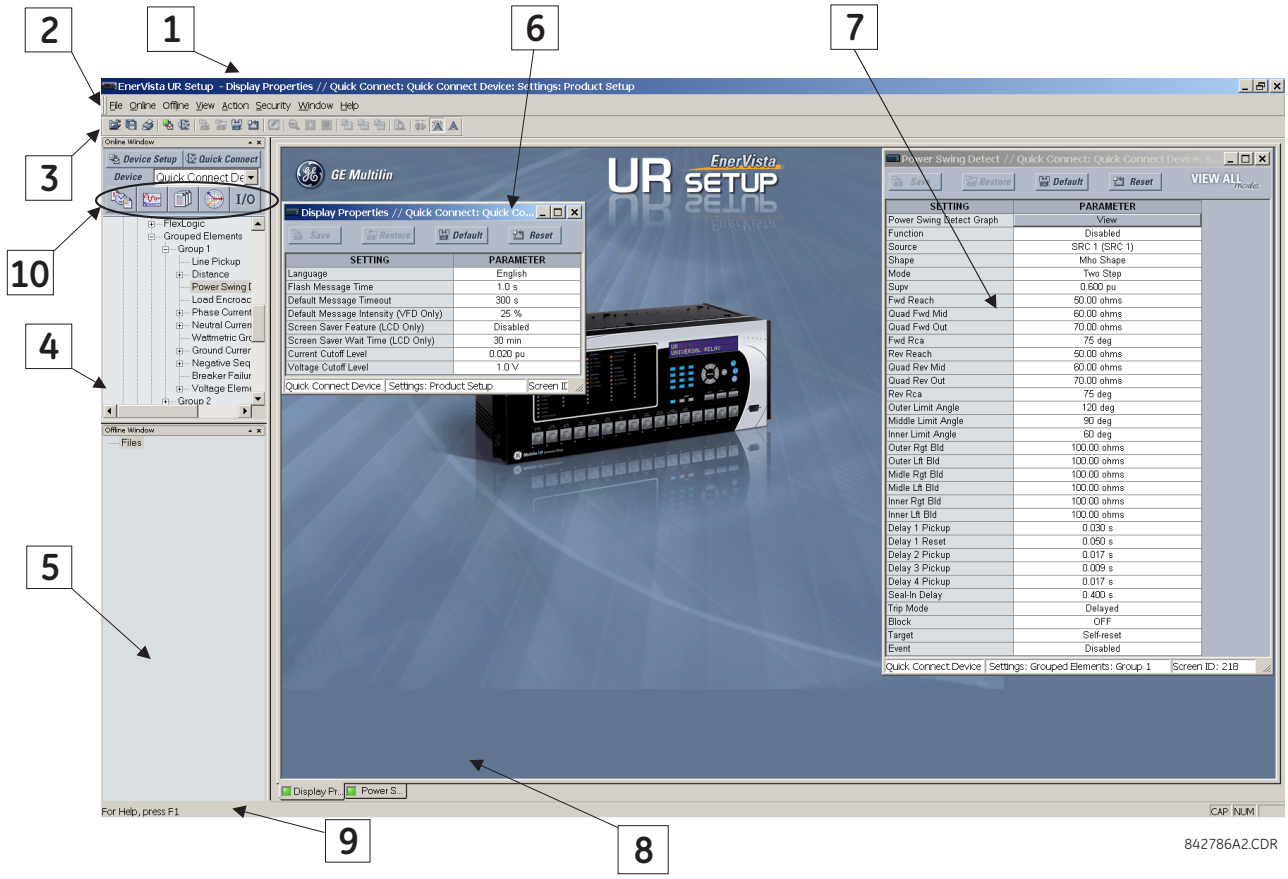

Figure 4–1: ENERVISTA UR SETUP SOFTWARE MAIN WINDOW

Setting file templates simplify the configuration and commissioning of multiple relays that protect similar assets. An example of this is a substation that has 10 similar feeders protected by 10 UR-series F60 relays.

In these situations, typically 90% or greater of the settings are identical between all devices. The templates feature allows engineers to configure and test these common settings, then lock them so that they are not available to users. For example, these locked down settings can be hidden from view for field engineers, allowing them to quickly identify and concentrate on the specific settings.

The remaining settings (typically 10% or less) can be specified as editable and be made available to field engineers installing the devices. These are settings such as protection element pickup values and CT and VT ratios.

The settings template mode allows the user to define which settings are visible in EnerVista UR Setup. Settings templates can be applied to both settings files (settings file templates) and online devices (online settings templates). The functionality is identical for both purposes.

Settings files conversion from previous firmware versions is supported.

a) ENABLING THE SETTINGS TEMPLATE

The settings file template feature is disabled by default. The following procedure describes how to enable the settings template for UR-series settings files.

1. Select a settings file from the offline window of the EnerVista UR Setup main screen.
2. Right-click the selected device or settings file and select the **Template Mode > Create Template** option.

The settings file template is now enabled and the file tree displayed in light blue. The settings file is now in template editing mode.

Alternatively, the settings template can also be applied to online settings. The following procedure describes this process.

1. Select an installed device from the online window of the EnerVista UR Setup main screen.
2. Right-click the selected device and select the **Template Mode > Create Template** option.

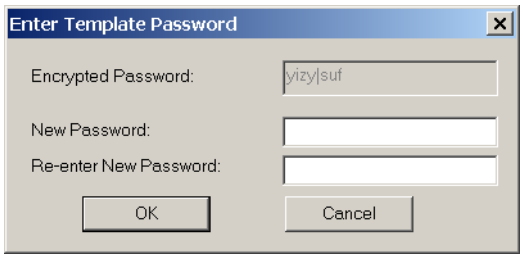

The software prompts for a template password. This password is required to use the template feature and must be at least four characters in length.

3. Enter and re-enter the new password, then click **OK** to continue.

The online settings template is now enabled. The device is now in template editing mode.

b) EDITING THE SETTINGS TEMPLATE

The settings template editing feature allows the user to specify which settings are available for viewing and modification in EnerVista UR Setup. By default, all settings except the FlexLogic equation editor settings are locked.

1. With the template already enabled, locate the device or settings file in the Online or Offline Window area in the software.
2. Right-click the device or file and select the **Template Mode > Edit Template** option to place the device in template editing mode. If prompted, enter the template password then click **OK**.
3. Open the relevant settings window that contains settings to be specified as viewable.

By default, all settings are specified as locked and displayed against a grey background. The icon on the upper right of the settings window also indicates that the EnerVista software is in **EDIT mode**. The following example shows the phase time overcurrent settings window in edit mode.

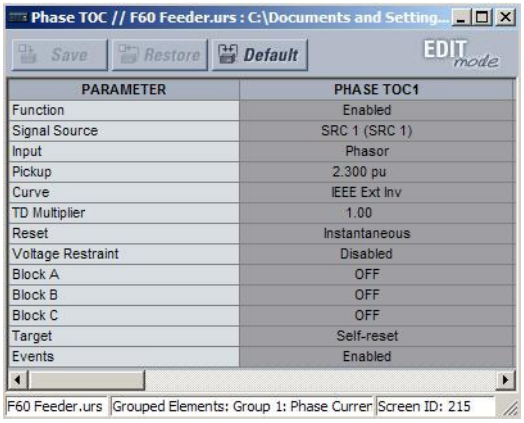

Figure 4–2: SETTINGS TEMPLATE VIEW, ALL SETTINGS SPECIFIED AS LOCKED

4. Specify the settings to make viewable by clicking them.

   The setting available to view is displayed against a yellow background as shown below.

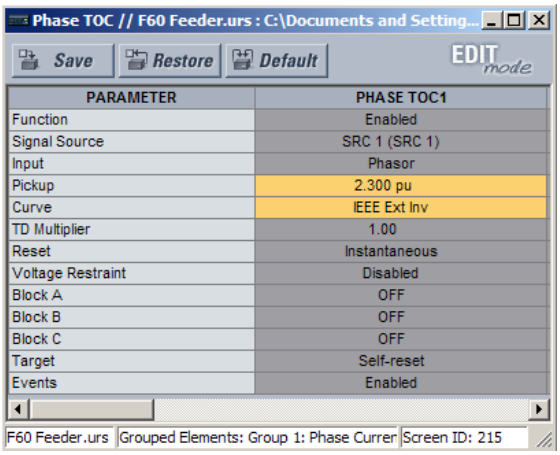

Figure 4–3: SETTINGS TEMPLATE VIEW, TWO SETTINGS SPECIFIED AS EDITABLE

5. Click on **Save** to save changes to the settings template.
6. Proceed through the settings tree to specify all viewable settings.

   The next time that the device/settings are accessed, only those specified as viewable/editable display in the menu hierarchy.

c) ADDING PASSWORD PROTECTION TO A TEMPLATE

GE recommends that templates be saved with password protection to maximize security.

NOTE When templates are created for online settings, the password is added during the initial template creation step. It does not need to be added after the template is created.

To add password protection to a settings file template:

1. In the Offline Window area, right-click the device and select the T**emplate Mode > Password Protect Template** option.

The software prompts for a template password. This password must be at least four characters in length.

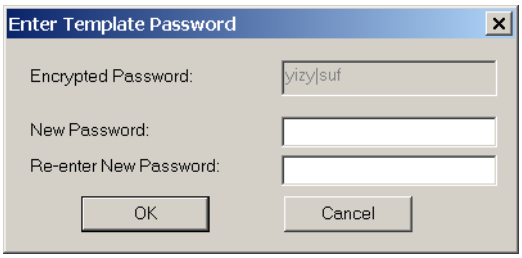

2. Enter and re-enter the new password, then click **OK** to continue.

The settings file template is now secured with password protection.

d) VIEWING THE SETTINGS TEMPLATE

Once all necessary settings are specified for viewing, users are able to view the settings template on the online device or settings file. There are two ways to specify the settings view with the settings template feature:

- Display only those settings available for editing
- Display all settings, with settings not available for editing greyed-out

Use the following procedure to only display settings available for editing:

1. Right-click the device in the Online or Offline Window area and apply the template by selecting the **Template Mode > View In Template Mode** option.
2. Enter the template password then click **OK** to apply the template.

Once the template has been applied, users are limited to view and edit the settings specified by the template. The effect of applying the template to the phase time overcurrent settings is shown below.

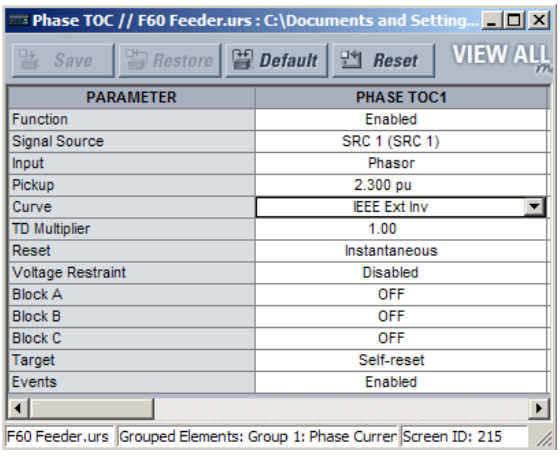

Phase time overcurrent settings window without template applied.

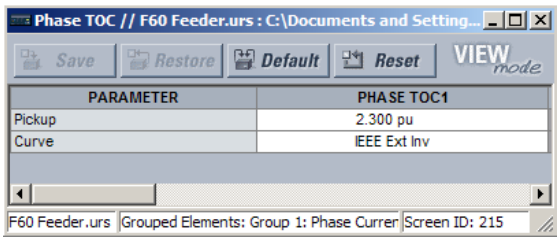

Phase time overcurrent window with template applied via the **Template Mode > View In Template Mode** command. The template specifies that only the Pickup and Curve settings be available.

842858A1.CDR

Figure 4–4: APPLYING TEMPLATES VIA THE VIEW IN TEMPLATE MODE COMMAND

Viewing the settings in template mode also modifies the settings tree, showing only the settings categories that contain editable settings. The effect of applying the template to a typical settings tree view is shown below.

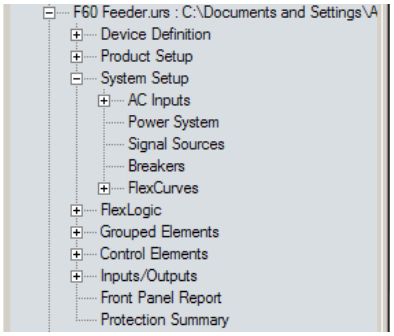

Typical settings tree view without template applied.

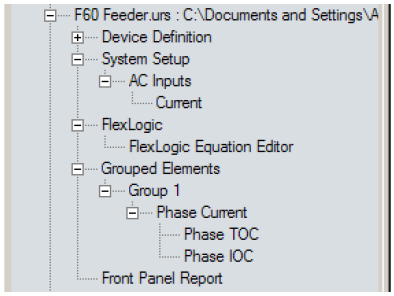

Typical settings tree view with template applied via the **Template Mode > View In Template Mode** command.

842860A1.CDR

Figure 4–5: APPLYING TEMPLATES VIA THE VIEW IN TEMPLATE MODE SETTINGS COMMAND

Use the following procedure to display settings available for editing and settings locked by the template.

1. Right-click the device in the Online or Offline Window area and apply the template by selecting the **Template Mode > View All Settings** option.
2. Enter the template password then click **OK** to apply the template.

Once the template has been applied, users are limited to edit the settings specified by the template, but all settings are shown. The effect of applying the template to the phase time overcurrent settings is shown below.

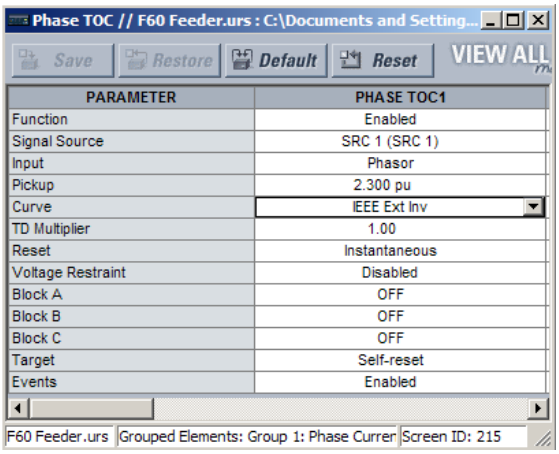

Phase time overcurrent settings window without template applied.

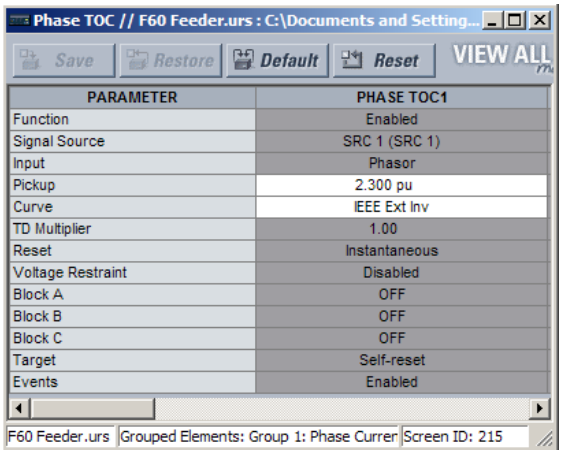

Phase time overcurrent window with template applied via the **Template Mode > View All Settings** command. The template specifies that only the Pickup and Curve settings be available.

842859A1.CDR

Figure 4–6: APPLYING TEMPLATES VIA THE VIEW ALL SETTINGS COMMAND

e) REMOVING THE SETTINGS TEMPLATE

Once a settings template is removed, it cannot be reapplied and a new settings template needs to be defined before use.

1. Right-click the device in the Online or Offline Window area and select the **Template Mode > Remove Template** option.
2. Enter the template password and click **OK** to continue.

3. Verify one more time that you want to remove the template by clicking **Yes**.

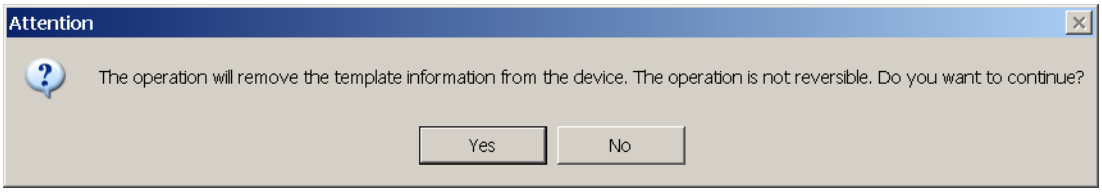

The EnerVista software removes all template information and all settings are available.

4.2.2 SECURING AND LOCKING FLEXLOGIC EQUATIONS

The UR allows users to secure parts or all of a FlexLogic equation, preventing unauthorized viewing or modification of critical FlexLogic applications. This is accomplished using the settings template feature to lock individual entries within FlexLogic equations.

Secured FlexLogic equations remain secure when files are sent to and retrieved from any UR-series device.

a) LOCKING FLEXLOGIC EQUATION ENTRIES

To lock individual entries of a FlexLogic™ equation:

1. Right-click the settings file or online device and select the **Template Mode > Create Template** item to enable the settings template feature.
2. If prompted, enter the template password.
3. Select the **FlexLogic > FlexLogic Equation Editor** settings menu item.

   By default, all FlexLogic™ entries are specified as viewable and displayed against a yellow background. The icon on the upper right of the window also indicates that EnerVista UR Setup is in **EDIT mode**.
4. Specify the entries to lock by clicking on them.

   The locked entries display against a grey background as shown in the example.

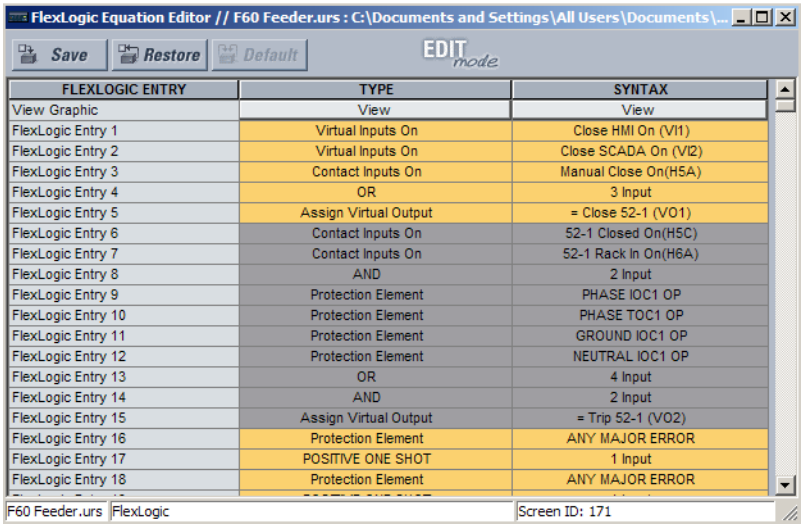

FLEXLOGIC ENTRY	TYPE	SYNTAX
View Graphic	View	View
FlexLogic Entry 1	Virtual Inputs On	Close HMI On (VI1)
FlexLogic Entry 2	Virtual Inputs On	Close SCADA On (VI2)
FlexLogic Entry 3	Contact Inputs On	Manual Close On(H5A)
FlexLogic Entry 4	OR	3 Input
FlexLogic Entry 5	Assign Virtual Output	= Close 52-1 (VO1)
FlexLogic Entry 6	Contact Inputs On	52-1 Closed On(H5C)
FlexLogic Entry 7	Contact Inputs On	52-1 Rack In On(H6A)
FlexLogic Entry 8	AND	2 Input
FlexLogic Entry 9	Protection Element	PHASE IOC1 OP
FlexLogic Entry 10	Protection Element	PHASE TOC1 OP
FlexLogic Entry 11	Protection Element	GROUND IOC1 OP
FlexLogic Entry 12	Protection Element	NEUTRAL IOC1 OP
FlexLogic Entry 13	OR	4 Input
FlexLogic Entry 14	AND	2 Input
FlexLogic Entry 15	Assign Virtual Output	= Trip 52-1 (VO2)
FlexLogic Entry 16	Protection Element	ANY MAJOR ERROR
FlexLogic Entry 17	POSITIVE ONE SHOT	1 Input
FlexLogic Entry 18	Protection Element	ANY MAJOR ERROR

Figure 4–7: LOCKING FLEXLOGIC ENTRIES IN EDIT MODE

5. Click the **Save** button to save and apply changes to the settings template.
6. Select the **Template Mode > View In Template Mode** option to view the template.
7. Optionally apply a password to the template by right-clicking the device and selecting the **Template Mode > Password Protect Template** option.

Once the template has been applied, users are limited to view and edit the FlexLogic entries not locked by the template. The effect of applying the template to the FlexLogic entries in the above procedure is shown below.

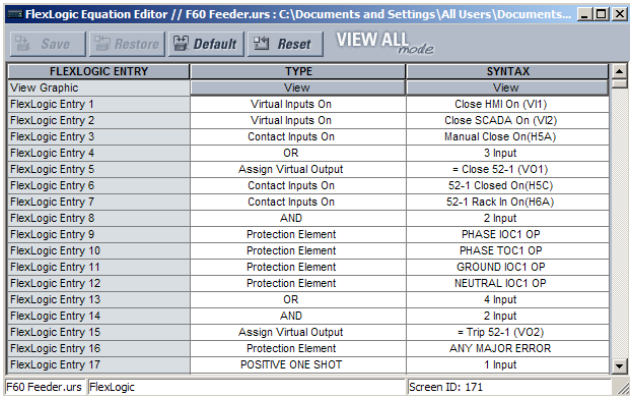

Typical FlexLogic™ entries without template applied.

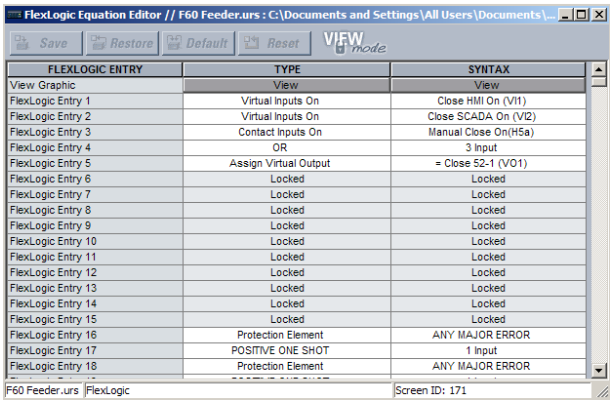

Typical FlexLogic™ entries locked with template via the **Template Mode > View In Template Mode** command.

842861A1.CDR

Figure 4–8: LOCKING FLEXLOGIC ENTRIES THROUGH SETTING TEMPLATES

The FlexLogic entries are also shown as locked in the graphical view (as shown below) and on the front panel display.

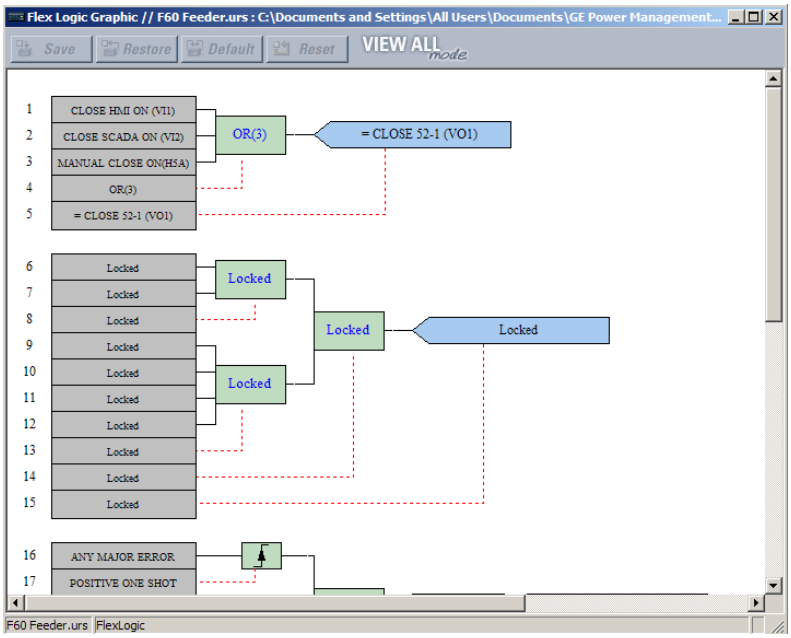

Figure 4–9: SECURED FLEXLOGIC IN GRAPHICAL VIEW

b) LOCKING FLEXLOGIC EQUATIONS TO A SERIAL NUMBER

A settings file and associated FlexLogic equations also can be locked to a UR serial number. Once FlexLogic entries in a settings file have been secured, use the following procedure to lock the settings file to a serial number. A serial number is viewable under **Actual Values > Product Info > Model Information**, the inside front panel, and the rear of the device.

8. Right-click the setting file in the Offline Window area and select the **Edit Settings File Properties** option. The window opens.

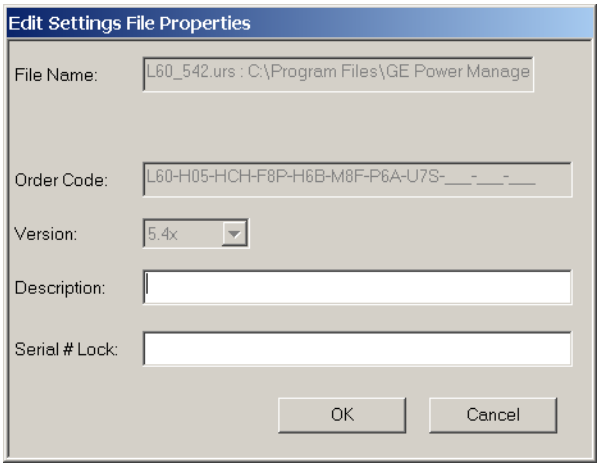

Figure 4–10: TYPICAL SETTINGS FILE PROPERTIES WINDOW

9. Enter the serial number of the G60 device to lock to the settings file in the **Serial # Lock** field.
10. Click the **OK** button to apply the change. The serial number is not validated.

The settings file and corresponding secure FlexLogic equations are now locked to the G60 device specified by the serial number.

4.2.3 SETTINGS FILE TRACEABILITY

A traceability feature for settings files allows the user to quickly determine if the settings in a G60 device have been changed since the time of installation from a settings file. When a settings file is transferred to a G60 device, the date, time, and serial number of the G60 are sent back to EnerVista UR Setup and added to the settings file on the local computer. This information can be compared with the G60 actual values at any later date to determine if security has been compromised.

The traceability information is only included in the settings file if a complete settings file is either transferred to the G60 device or obtained from the G60 device. Any partial settings transfers by way of drag and drop do not add the traceability information to the settings file.

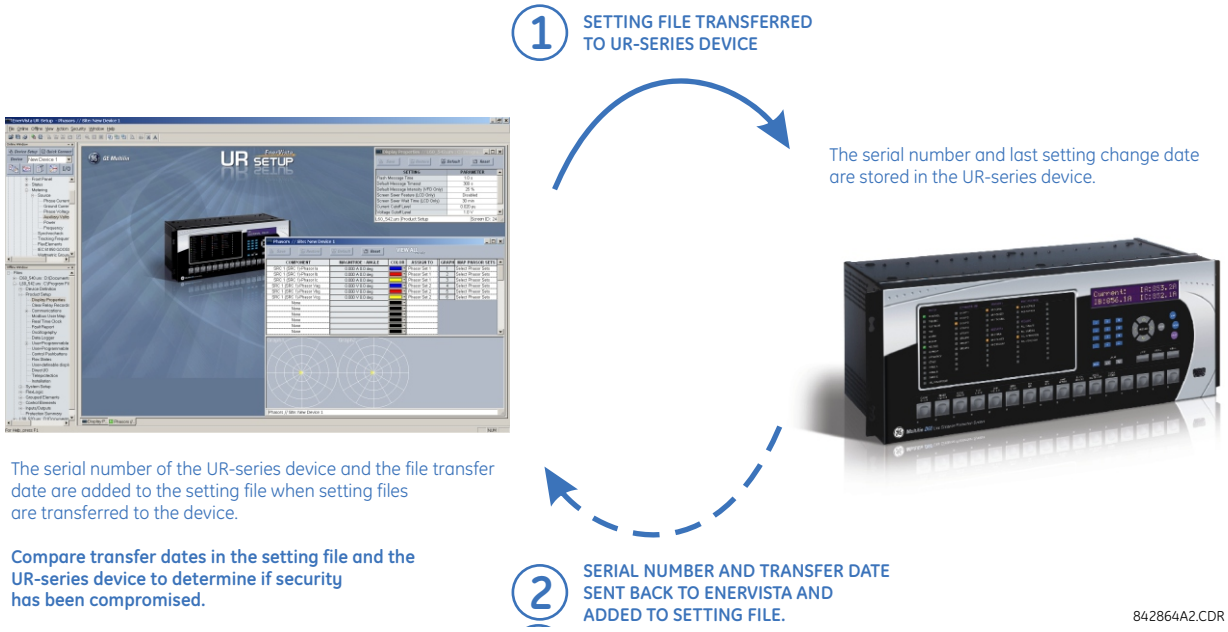

Figure 4–11: SETTINGS FILE TRACEABILITY MECHANISM

With respect to the above diagram, the traceability feature is used as follows.

1. The transfer date of a setting file written to a G60 is logged in the relay and can be viewed via EnerVista UR Setup or the front panel display. Likewise, the transfer date of a setting file saved to a local computer is logged in EnerVista UR Setup.
2. Comparing the dates stored in the relay and on the settings file at any time in the future indicates if any changes have been made to the relay configuration since the settings file was saved.

a) SETTINGS FILE TRACEABILITY INFORMATION

The serial number and file transfer date are saved in the settings files when they are sent to a G60 device.

The G60 serial number and file transfer date are included in the settings file device definition within the EnerVista UR Setup offline window as shown in the example below.

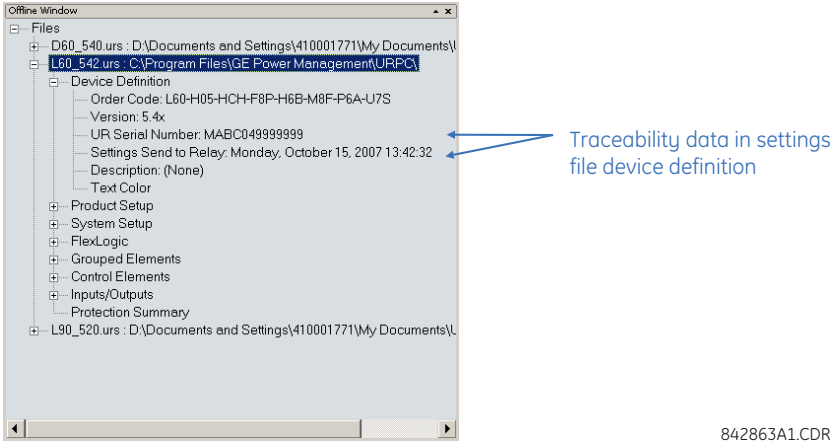

Figure 4–12: DEVICE DEFINITION SHOWING TRACEABILITY DATA

This information is also available in printed settings file reports as shown in the example below.

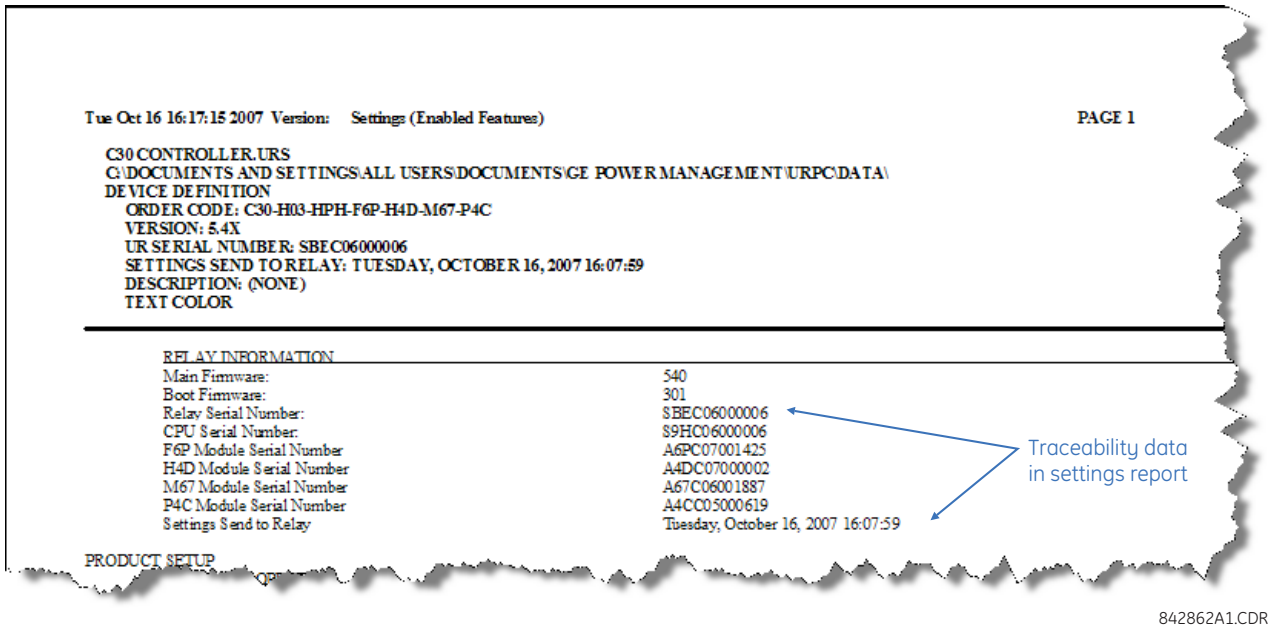

842862A1.CDR

Figure 4–13: SETTINGS FILE REPORT SHOWING TRACEABILITY DATA

b) ONLINE DEVICE TRACEABILITY INFORMATION

The G60 serial number and file transfer date are available for an online device through the actual values. Select the **Actual Values > Product Info > Model Information** menu item within the EnerVista UR Setup online window as shown in the example below.

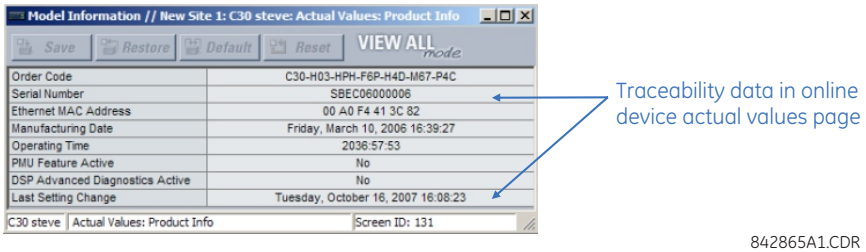

842865A1.CDR

Figure 4–14: TRACEABILITY DATA IN ACTUAL VALUES WINDOW

This information is also available from the front panel display through the following actual values:

ACTUAL VALUES ⇨⇩ PRODUCT INFO ⇨ MODEL INFORMATION ⇨⇩ SERIAL NUMBER
ACTUAL VALUES ⇨⇩ PRODUCT INFO ⇨ MODEL INFORMATION ⇨⇩ LAST SETTING CHANGE

c) ADDITIONAL TRACEABILITY RULES

The following additional rules apply for the traceability feature

- If the user changes any settings within the settings file in the offline window, then the traceability information is removed from the settings file.
- If the user creates a new settings file, then no traceability information is included in the settings file.
- If the user converts an existing settings file to another revision, then any existing traceability information is removed from the settings file.
- If the user duplicates an existing settings file, then any traceability information is transferred to the duplicate settings file.

4.3.1 FACEPLATE

a) ENHANCED FACEPLATE

The front panel interface is one of two supported interfaces, the other interface being EnerVista UR Setup software. The front panel interface consists of LED panels, an RS232 port, keypad, LCD display, control pushbuttons, and optional user-programmable pushbuttons.

The faceplate is hinged to allow easy access to the removable modules.

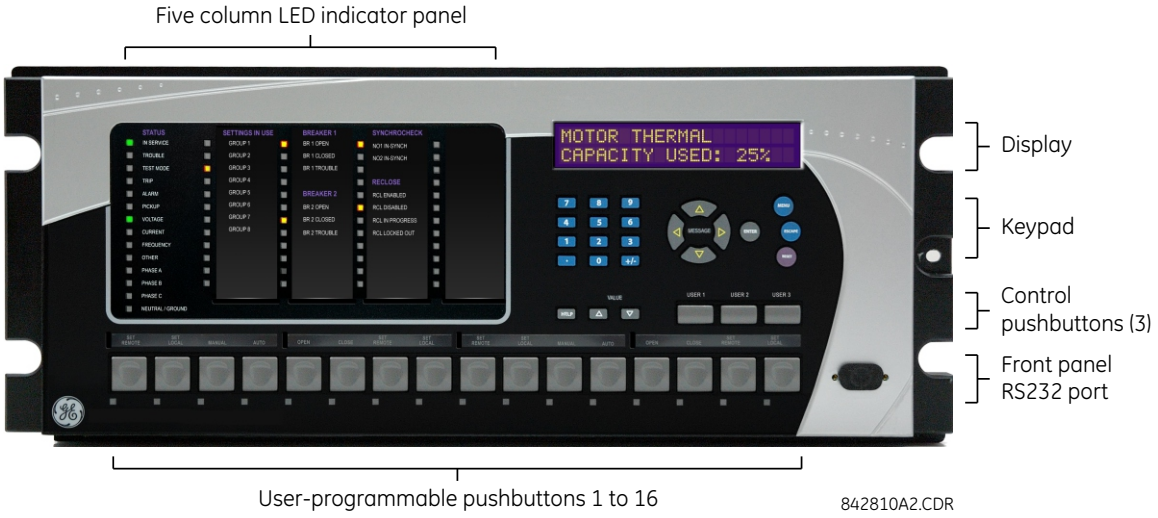

Figure 4–15: UR-SERIES ENHANCED FACEPLATE

b) BASIC FACEPLATE

There are two interfaces: the front panel and the EnerVista UR Setup software. The front panel interface consists of LED panels, an RS232 port, keypad, LCD display, control pushbuttons, and optional user-programmable pushbuttons.

The faceplate is hinged to allow easy access to the removable modules. There is also a removable dust cover that fits over the faceplate that must be removed in order to access the keypad panel. The following figure shows the horizontal arrangement of the faceplate panels.

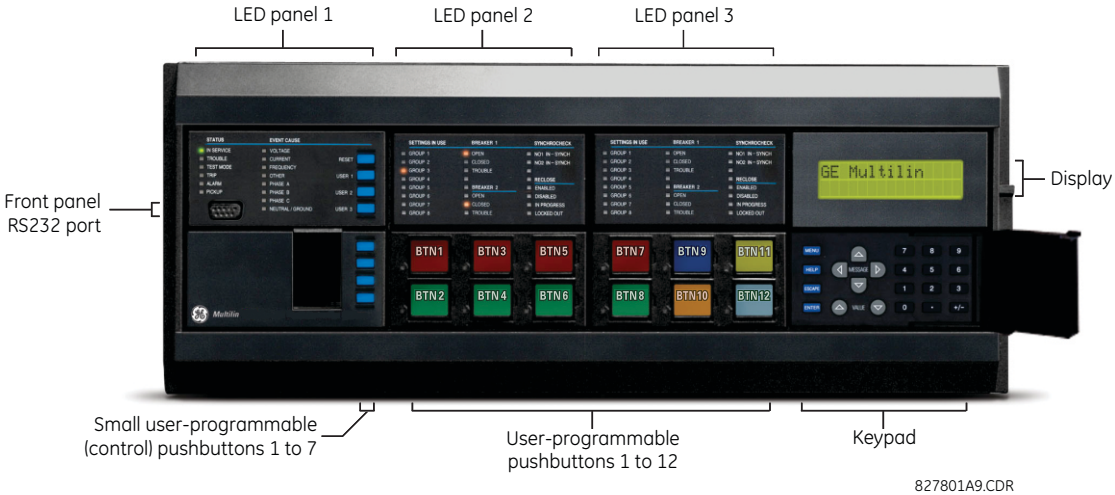

Figure 4–16: UR-SERIES STANDARD HORIZONTAL FACEPLATE PANELS

The following figure shows the vertical arrangement of the faceplate panels for relays ordered with the vertical option.

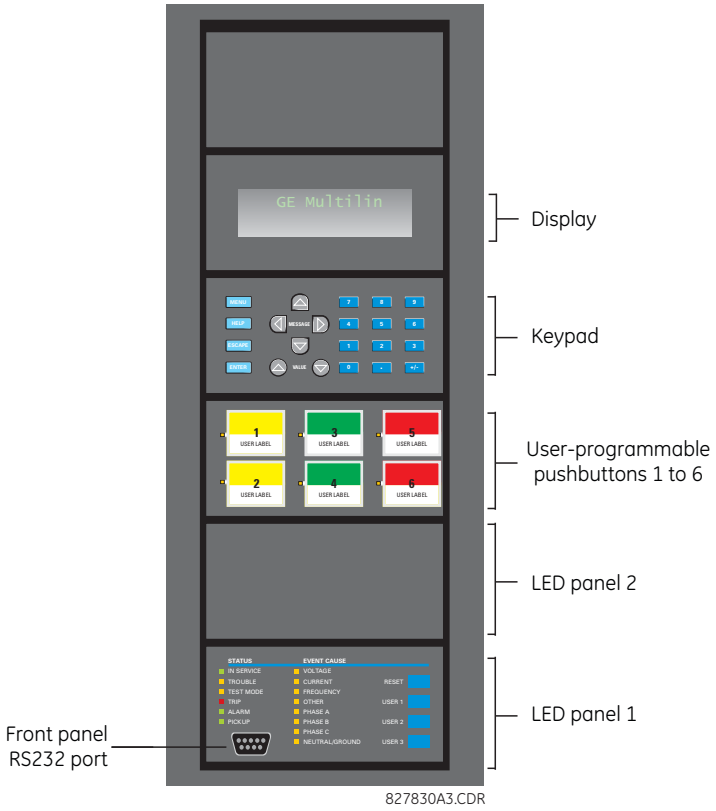

Figure 4–17: UR-SERIES STANDARD VERTICAL FACEPLATE PANELS

4.3.2 LED INDICATORS

a) ENHANCED FACEPLATE

The enhanced front panel display provides five columns of LED indicators. The first column contains 14 status and event cause LEDs, and the next four columns contain the 48 user-programmable LEDs.

The RESET key is used to reset any latched LED indicator or target message, once the condition has been cleared (these latched conditions can also be reset via the **SETTINGS** ⇨⇩ **INPUT/OUTPUTS** ⇨⇩ **RESETTING** menu). The RS232 port is intended for connection to a computer.

The USER keys are used by the breaker control feature.

Figure 4–18: TYPICAL LED INDICATOR PANEL FOR ENHANCED FACEPLATE

The status indicators in the first column are described below.

- **IN SERVICE**: This LED indicates that control power is applied, all monitored inputs, outputs, and internal systems are OK, and that the device has been programmed.
- **TROUBLE**: This LED indicates that the relay has detected an internal problem.
- **TEST MODE**: This LED indicates that the relay is in test mode. For more information, see the Test Mode section in the Settings chapter.
- **TRIP**: This LED indicates that the FlexLogic operand serving as a trip switch has operated. This indicator always latches; as such, a reset command must be initiated to allow the latch to be reset.
- **ALARM**: This LED indicates that the FlexLogic operand serving as an alarm switch has operated. This indicator is never latched.
- **PICKUP**: This LED indicates that an element is picked up. This indicator is never latched.

The event cause indicators in the first column are described below.

Events cause LEDs are turned on or off by protection elements that have their respective target setting selected as either “Enabled” or “Latched”. If a protection element target setting is “Enabled”, then the corresponding event cause LEDs remain on as long as operate operand associated with the element remains asserted. If a protection element target setting is “Latched”, then the corresponding event cause LEDs turn on when the operate operand associated with the element is asserted and remain on until the RESET button on the front panel is pressed after the operand is reset.

All elements that are able to discriminate faulted phases can independently turn off or on the phase A, B, or C LEDs. This includes phase instantaneous overcurrent, phase undervoltage, etc. This means that the phase A, B, and C operate operands for individual protection elements are ORed to turn on or off the phase A, B, or C LEDs.

- **VOLTAGE**: This LED indicates voltage was involved.
- **CURRENT**: This LED indicates current was involved.
- **FREQUENCY**: This LED indicates frequency was involved.
- **OTHER**: This LED indicates a composite function that is not solely current, voltage, or frequency based (distance or power for example) or a control function (digital element or trip bus for example).
- **PHASE A**: This LED indicates phase A was involved.
- **PHASE B**: This LED indicates phase B was involved.
- **PHASE C**: This LED indicates phase C was involved.
- **NEUTRAL/GROUND**: This LED indicates that neutral or ground was involved.

The user-programmable LEDs consist of 48 amber LED indicators in four columns. The operation of these LEDs is user-defined. Support for applying a customized label beside every LED is provided. Default labels are shipped in the label package of every G60, together with custom templates. The default labels can be replaced by user-printed labels.

User customization of LED operation is of maximum benefit in installations where languages other than English are used to communicate with operators. Refer to the User-Programmable LEDs section in chapter 5 for the settings used to program the operation of the LEDs on these panels.

b) BASIC FACEPLATE

The basic faceplate consists of three panels with LED indicators, keys, and a communications port. The RESET key is used to reset any latched LED indicator or target message, once the condition has been cleared (these latched conditions can also be reset via the **SETTINGS** ⇨⇩ **INPUT/OUTPUTS** ⇨⇩ **RESETTING** menu). The RS232 port is for connection to a computer.

The **USER** keys are used by the breaker control feature.

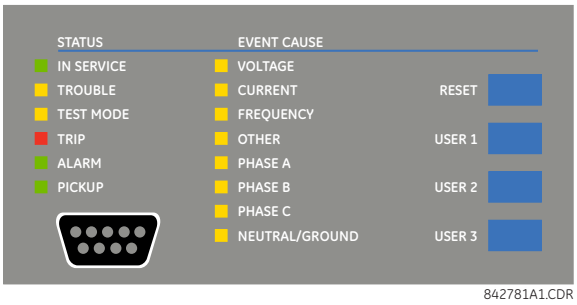

Figure 4–19: LED PANEL 1

STATUS INDICATORS:

- **IN SERVICE**: Indicates that control power is applied; all monitored inputs/outputs and internal systems are OK; the relay has been programmed.
- **TROUBLE**: Indicates that the relay has detected an internal problem.
- **TEST MODE**: Indicates that the relay is in test mode. For more information, see the Test Mode section in the Settings chapter.
- **TRIP**: Indicates that the selected FlexLogic operand serving as a Trip switch has operated. This indicator always latches; the reset command must be initiated to allow the latch to be reset.
- **ALARM**: Indicates that the selected FlexLogic operand serving as an Alarm switch has operated. This indicator is never latched.
- **PICKUP**: Indicates that an element is picked up. This indicator is never latched.

EVENT CAUSE INDICATORS:

Events cause LEDs are turned on or off by protection elements that have their respective target setting selected as either “Enabled” or “Latched”. If a protection element target setting is “Enabled”, then the corresponding event cause LEDs remain on as long as operate operand associated with the element remains asserted. If a protection element target setting is “Latched”, then the corresponding event cause LEDs turn on when the operate operand associated with the element is asserted and remain on until the RESET button on the front panel is pressed after the operand is reset.

All elements that are able to discriminate faulted phases can independently turn off or on the phase A, B, or C LEDs. This includes phase instantaneous overcurrent, phase undervoltage, etc. This means that the phase A, B, and C operate operands for individual protection elements are ORed to turn on or off the phase A, B, or C LEDs.

- **VOLTAGE**: Indicates voltage was involved.
- **CURRENT**: Indicates current was involved.
- **FREQUENCY**: Indicates frequency was involved.
- **OTHER**: Indicates a composite function that is not solely current, voltage, or frequency based (distance or power for example) or a control function (digital element or trip bus for example).
- **PHASE A**: Indicates phase A was involved.
- **PHASE B**: Indicates phase B was involved.
- **PHASE C**: Indicates phase C was involved.
- **NEUTRAL/GROUND**: Indicates that neutral or ground was involved.

USER-PROGRAMMABLE INDICATORS:

The second and third provide 48 amber LED indicators whose operation is controlled by the user. Support for applying a customized label beside every LED is provided.

User customization of LED operation is of maximum benefit in installations where languages other than English are used to communicate with operators. Refer to the User-Programmable LEDs section in chapter 5 for the settings used to program the operation of the LEDs on these panels.

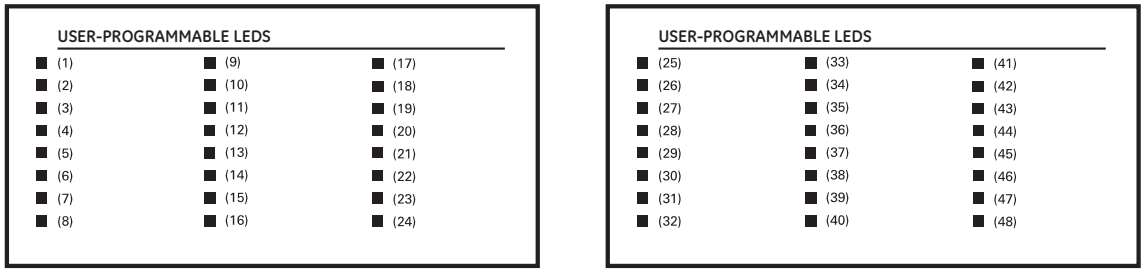

842782A1.CDR

Figure 4–20: LED PANELS 2 AND 3 (INDEX TEMPLATE)

DEFAULT LABELS FOR LED PANEL 2:

The default labels are intended to represent:

- **GROUP 1...6**: The illuminated GROUP is the active settings group.
- **SYNCHROCHECK NO1(4) IN-SYNCH**: Voltages have satisfied the synchrocheck element.

NOTE

Firmware revisions 2.9x and earlier support eight user setting groups; revisions 3.0x and higher support six setting groups. For convenience of users using earlier firmware revisions, the relay panel shows eight setting groups. Please note that the LEDs, despite their default labels, are fully user-programmable.

The relay is shipped with the default label for the LED panel 2. The LEDs, however, are not pre-programmed. To match the pre-printed label, the LED settings must be entered as shown in the User-Programmable LEDs section of chapter 5. The LEDs are fully user-programmable. The default labels can be replaced by user-printed labels for both panels as explained in the following section.

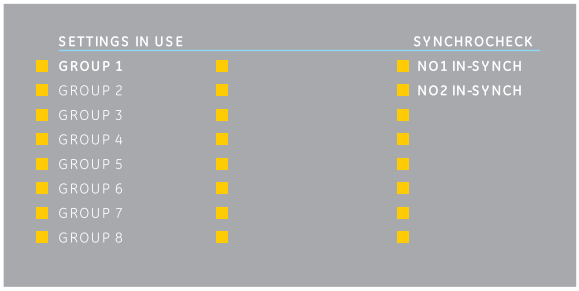

842785A1.CDR

Figure 4–21: LED PANEL 2 (DEFAULT LABELS)

4.3.3 CUSTOM LABELING OF LEDS

a) ENHANCED FACEPLATE

The following procedure requires these pre-requisites:

- EnerVista UR Setup software is installed and operational
- The G60 settings have been saved to a settings file
- The G60 front panel label cutout sheet (GE Multilin part number 1006-0047) has been downloaded from http://www.gegridsolutions.com/products/support/ur/URLEDenhanced.doc and printed
- Small-bladed knife

To create custom LED labels for the enhanced front panel display:

1. Start the EnerVista UR Setup software.

2. Select the **Front Panel Report** item at the bottom of the menu tree for the settings file. The front panel report window displays.

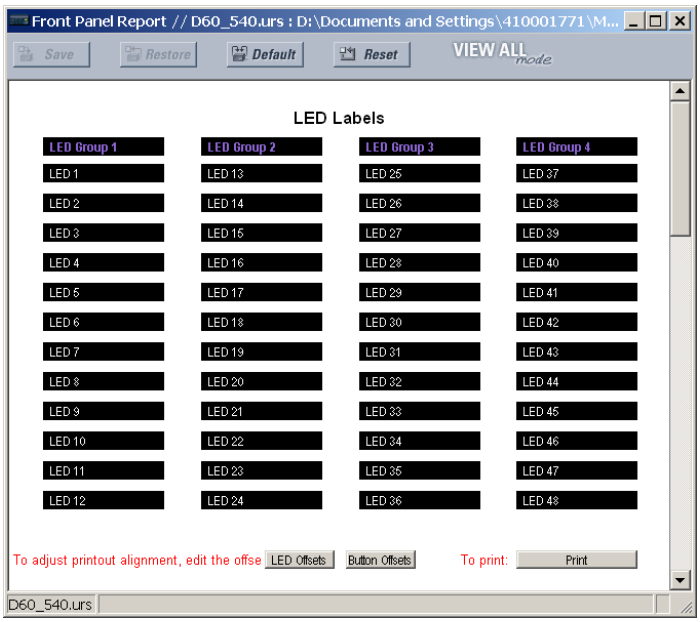

Figure 4–22: FRONT PANEL REPORT WINDOW

3. Enter the text to appear next to each LED and above each user-programmable pushbuttons in the fields provided.
4. Feed the G60 front panel label cutout sheet into a printer and press the **Print** button in the front panel report window.
5. When printing is complete, fold the sheet along the perforated lines and punch out the labels.
6. Remove the G60 label insert tool from the package and bend the tabs as described in the following procedures. These tabs are used for removal of the default and custom LED labels.

NOTE

It is important that the tool be used EXACTLY as shown below, with the printed side containing the GE part number facing the user.

The label package shipped with every G60 contains the three default labels shown below, the custom label template sheet, and the label removal tool.

If the default labels are suitable for your application, insert them in the appropriate slots and program the LEDs to match them. If you require custom labels, follow the procedures below to remove the original labels and insert the new ones.

The following procedure describes how to setup and use the label removal tool.

1. Bend the tabs at the left end of the tool upwards as shown below.

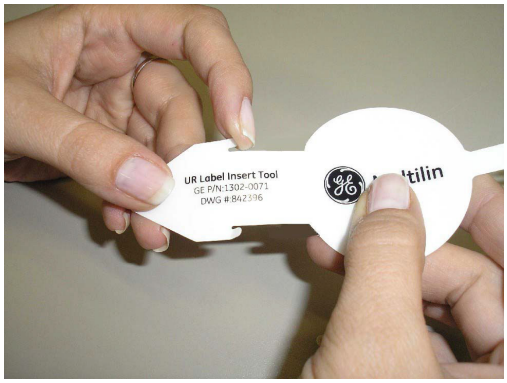

2. Bend the tab at the center of the tool tail as shown below.

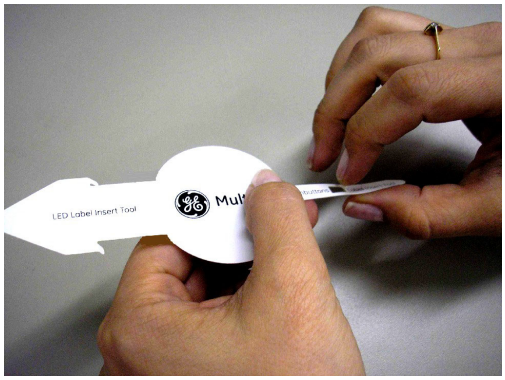

The following procedure describes how to remove the LED labels from the G60 enhanced front panel and insert the custom labels.

1. Use the knife to lift the LED label and slide the label tool underneath. Make sure the bent tabs are pointing away from the relay.

2. Slide the label tool under the LED label until the tabs snap out as shown below. This attaches the label tool to the LED label.

3. Remove the tool and attached LED label as shown below.

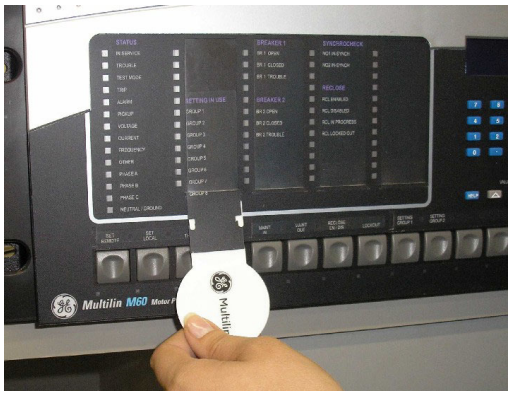

4. Slide the new LED label inside the pocket until the text is properly aligned with the LEDs, as shown below.

The following procedure describes how to remove the user-programmable pushbutton labels from the G60 enhanced front panel and insert the custom labels.

1. Use the knife to lift the pushbutton label and slide the tail of the label tool underneath, as shown below. Make sure the bent tab is pointing away from the relay.

2. Slide the label tool under the user-programmable pushbutton label until the tabs snap out as shown below. This attaches the label tool to the user-programmable pushbutton label.

3. Remove the tool and attached user-programmable pushbutton label as shown below.

4. Slide the new user-programmable pushbutton label inside the pocket until the text is properly aligned with the buttons, as shown below.

4.3.4 DISPLAY

All messages are displayed on a backlit liquid crystal display (LCD) to make them visible under poor lighting conditions. While the keypad and display are not actively being used, the display defaults to user-defined messages. Any high-priority event-driven message automatically overrides the default message and appears on the display.

Settings files conversion from previous firmware versions is supported.

4.3.5 KEYPAD

Display messages are organized into pages under the following headings: actual values, settings, commands, and targets. The MENU key navigates through these pages. Each heading page is divided further into logical subgroups.

The MESSAGE keys navigate through the subgroups. The VALUE keys increment or decrement numerical setting values when in programming mode. These keys also scroll through alphanumeric values in the text edit mode. Alternatively, values can be entered with the numeric keypad.

The decimal key initiates and advances to the next character in text edit mode or enters a decimal point.

The HELP key can be pressed at any time for context-sensitive help messages.

The ENTER key stores altered setting values.

When entering an IP address on the front panel, key in the first sequence of the number, then press the • key for the decimal place. For example, for 127.0.0.1, press 127, then •, then 0, then •, then 0, then •, then 1. To save the address, press the ENTER key.

4.3.6 BREAKER CONTROL

a) INTRODUCTION

The G60 can interface with associated circuit breakers. In many cases the application monitors the state of the breaker, that can be presented on faceplate LEDs, along with a breaker trouble indication. Breaker operations can be manually initiated from faceplate keypad or automatically initiated from a FlexLogic operand. A setting is provided to assign names to each breaker; this user-assigned name is used for the display of related flash messages. These features are provided for two breakers; the user can use only those portions of the design relevant to a single breaker, which must be breaker 1.

For the following discussion it is assumed the **SETTINGS ⇨⇩ SYSTEM SETUP ⇨⇩ BREAKERS ⇨ BREAKER 1(2) ⇨ BREAKER FUNCTION** setting is "Enabled" for each breaker.

b) CONTROL MODE SELECTION AND MONITORING

Installations can require that a breaker is operated in the three-pole only mode (3-pole), or in the one and three-pole (1-pole) mode, selected by setting. If the mode is selected as three-pole, a single input tracks the breaker open or closed position. If the mode is selected as one-pole, all three breaker pole states must be input to the relay. These inputs must be in agreement to indicate the position of the breaker.

For the following discussion it is assumed the **SETTINGS** ⇨⇩ **SYSTEM SETUP** ⇨⇩ **BREAKERS** ⇨ **BREAKER 1(2)** ⇨⇩ **BREAKER 1(2) PUSH BUTTON CONTROL** setting is "Enabled" for each breaker.

c) FACEPLATE (USER KEY) CONTROL

After the 30 minute interval during which command functions are permitted after a correct command password, the user cannot open or close a breaker via the keypad. The following discussions begin from the not-permitted state.

d) CONTROL OF TWO BREAKERS

For the following example setup, the `(Name)` field represents the user-programmed variable name.

For this application (setup shown below), the relay is connected and programmed for both breaker 1 and breaker 2. The USER 1 key performs the selection of which breaker is to be operated by the USER 2 and USER 3 keys. The USER 2 key is used to manually close the breaker and the USER 3 key is used to manually open the breaker.

`ENTER COMMAND PASSWORD`	This message appears when the USER 1, USER 2, or USER 3 key is pressed and a **COMMAND PASSWORD** is required; i.e. if **COMMAND PASSWORD** is enabled and no commands have been issued within the last 30 minutes.
`Press USER 1 To Select Breaker`	This message appears if the correct password is entered or if none is required. This message displays for 30 seconds or until the USER 1 key is pressed again.
`BKR1-(Name) SELECTED USER 2=CLS/USER 3=OP`	This message is displayed after the USER 1 key is pressed for the second time. Three possible actions can be performed from this state within 30 seconds as per items **(1)**, **(2)** and **(3)** below:
(1)	
`USER 2 OFF/ON To Close BKR1-(Name)`	If the USER 2 key is pressed, this message appears for 20 seconds. If the USER 2 key is pressed again within that time, a signal is created that can be programmed to operate an output relay to close breaker 1.
(2)	
`USER 3 OFF/ON To Open BKR1-(Name)`	If the USER 3 key is pressed, this message appears for 20 seconds. If the USER 3 key is pressed again within that time, a signal is created that can be programmed to operate an output relay to open breaker 1.
(3)	
`BKR2-(Name) SELECTED USER 2=CLS/USER 3=OP`	If the USER 1 key is pressed at this step, this message appears showing that a different breaker is selected. Three possible actions can be performed from this state as per **(1)**, **(2)** and **(3)**. Repeatedly pressing the USER 1 key alternates between available breakers. Pressing keys other than USER 1, 2, or 3 at any time aborts the breaker control function.

e) CONTROL OF ONE BREAKER

For this application the relay is connected and programmed for breaker 1 only. Operation for this application is identical to that described above for two breakers.

4.3.7 MENUS

a) NAVIGATION

Press the MENU key to select a header display page (top-level menu). The header title appears momentarily followed by a header display page menu item. Each press of the MENU key advances through the following main heading pages:

- Actual values
- Settings

- Commands
- Targets
- User displays (when enabled)

b) HIERARCHY

The setting and actual value messages are arranged hierarchically. The header display pages are indicated by double scroll bar characters (■■), while sub-header pages are indicated by single scroll bar characters (■). The header display pages represent the highest level of the hierarchy and the sub-header display pages fall below this level. The MESSAGE UP and DOWN keys move within a group of headers, sub-headers, setting values, or actual values. Continually pressing the MESSAGE RIGHT key from a header display displays specific information for the header category. Conversely, continually pressing the MESSAGE LEFT key from a setting value or actual value display returns to the header display.

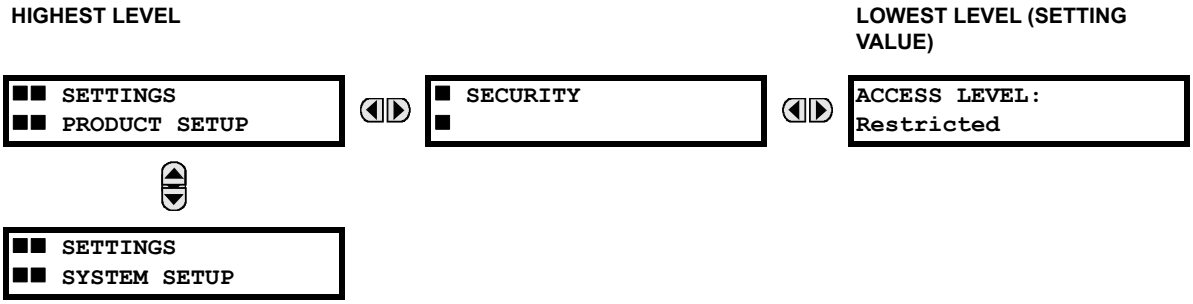

c) EXAMPLE MENU NAVIGATION

■■ ACTUAL VALUES ■■ STATUS	Press the MENU key until the header for the first Actual Values page appears. This page contains system and relay status information. Repeatedly press the MESSAGE keys to display the other actual value headers.
⇩	
■■ SETTINGS ■■ PRODUCT SETUP	Press the MENU key until the header for the first page of Settings appears. This page contains settings to configure the relay.
⇩	
■■ SETTINGS ■■ SYSTEM SETUP	Press the MESSAGE DOWN key to move to the next Settings page. This page contains settings for System Setup. Repeatedly press the MESSAGE UP and DOWN keys to display the other setting headers and then back to the first Settings page header.
⇩	
■ SECURITY ■	From the Settings page one header (Product Setup), press the MESSAGE RIGHT key once to display the first sub-header (Security).
⇩	
ACCESS LEVEL: Restricted	Press the MESSAGE RIGHT key once more and this will display the first setting for Security. Pressing the MESSAGE DOWN key repeatedly will display the remaining setting messages for this sub-header.
⇩	
■ SECURITY ■	Press the MESSAGE LEFT key once to move back to the first sub-header message.
⇩	
■ DISPLAY ■ PROPERTIES	Pressing the MESSAGE DOWN key displays the second setting sub-header associated with the Product Setup header.
⇩	
FLASH MESSAGE TIME: 1.0 s	Press the MESSAGE RIGHT key once more to display the first setting for Display Properties.

a) ENTERING NUMERICAL DATA

Each numerical setting has its own minimum, maximum, and increment value associated with it. These parameters define what values are acceptable for a setting.

```
FLASH MESSAGE
TIME:  1.0 s
```
⇩

For example, select the **SETTINGS** ⇨ **PRODUCT SETUP** ⇨⇩ **DISPLAY PROPERTIES** ⇨ **FLASH MESSAGE TIME** setting.

```
MINIMUM:   0.5
MAXIMUM:  10.0
```

Press the HELP key to view the minimum and maximum values. Press the HELP key again to view the next context sensitive help message.

Two methods of editing and storing a numerical setting value are available.

- **0 to 9 and decimal point**: The relay numeric keypad works the same as that of any electronic calculator. A number is entered one digit at a time. The leftmost digit is entered first and the rightmost digit is entered last. Pressing the MESSAGE LEFT key or pressing the ESCAPE key, returns the original value to the display.
- **VALUE keys**: The VALUE UP key increments the displayed value by the step value, up to the maximum value allowed. While at the maximum value, pressing the VALUE UP key again allows the setting selection to continue upward from the minimum value. The VALUE DOWN key decrements the displayed value by the step value, down to the minimum value. While at the minimum value, pressing the VALUE DOWN key again allows the setting selection to continue downward from the maximum value.

```
FLASH MESSAGE
TIME:  2.5 s
```
⇩

As an example, set the flash message time setting to 2.5 seconds. Press the appropriate numeric keys in the sequence “2 . 5". The display message changes as the digits are being entered.

```
NEW SETTING
HAS BEEN STORED
```

Until ENTER is pressed, editing changes are not registered by the relay. Therefore, press ENTER to store the new value in memory. This flash message momentarily appears as confirmation of the storing process. Numerical values which contain decimal places are rounded-off if more decimal place digits are entered than specified by the step value.

b) ENTERING ENUMERATION DATA

Enumeration settings have data values which are part of a set, whose members are explicitly defined by a name. A set is comprised of two or more members.

```
ACCESS LEVEL:
Restricted
```

For example, the selections available for **ACCESS LEVEL** are "Restricted", "Command", "Setting", and "Factory Service".

Enumeration type values are changed using the VALUE keys. The VALUE UP key displays the next selection while the VALUE DOWN key displays the previous selection.

```
ACCESS LEVEL:
Setting
```
⇩

If the **ACCESS LEVEL** needs to be "Setting", press the VALUE keys until the proper selection is displayed. Press HELP at any time for the context sensitive help messages.

```
NEW SETTING
HAS BEEN STORED
```

Changes are not registered by the relay until the ENTER key is pressed. Pressing ENTER stores the new value in memory. This flash message momentarily appears as confirmation of the storing process.

c) ENTERING ALPHANUMERIC TEXT

Text settings have data values which are fixed in length, but user-defined in character. They can be upper case letters, lower case letters, numerals, and a selection of special characters.

There are several places where text messages can be programmed to allow the relay to be customized for specific applications. One example is the Message Scratchpad. Use the following procedure to enter alphanumeric text messages.

For example: to enter the text, “Breaker #1”.

1. Press the decimal point to enter text edit mode.
2. Press the VALUE keys until the character 'B' appears; press the decimal key to advance the cursor to the next position.
3. Repeat step 2 for the remaining characters: r,e,a,k,e,r, ,#,1.
4. Press ENTER to store the text.
5. If you have any problem, press HELP to view context sensitive help. Flash messages appear sequentially for several seconds each. For the case of a text setting message, pressing HELP displays how to edit and store new values.

d) ACTIVATING THE RELAY

RELAY SETTINGS: Not Programmed

When the relay is powered up, the Trouble LED is on, the In Service LED off, and this message displayed, indicating the relay is in the "Not Programmed" state and is safeguarding (output relays blocked) against the installation of a relay whose settings have not been entered. This message remains until the relay is explicitly put in the "Programmed" state.

To change the **RELAY SETTINGS**: "Not Programmed" mode to "Programmed", proceed as follows:

1. Press the MENU key until the **SETTINGS** header flashes momentarily and the **PRODUCT SETUP** message appears on the display.
2. Press the MESSAGE RIGHT key until the **SECURITY** message appears on the display.
3. Press the MESSAGE DOWN key until the **INSTALLATION** message appears on the display.
4. Press the MESSAGE RIGHT key until the **RELAY SETTINGS: Not Programmed** message is displayed.

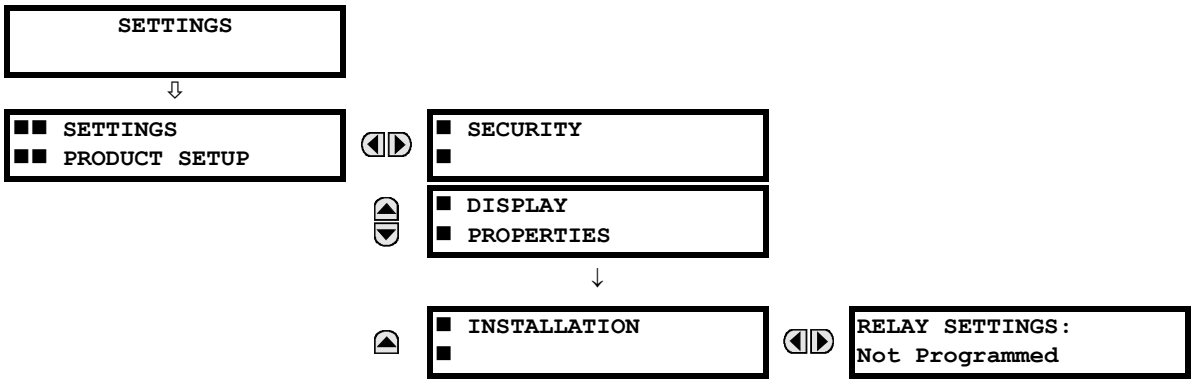

5. After the **RELAY SETTINGS: Not Programmed** message appears on the display, press the VALUE keys change the selection to "Programmed".
6. Press the ENTER key.

7. When the "NEW SETTING HAS BEEN STORED" message appears, the relay is in "Programmed" state and the In Service LED turns on.

e) ENTERING INITIAL PASSWORDS

The information in this section refers to password security. For information on how to set or change CyberSentry passwords, see the Settings > Product Setup > Security > CyberSentry section in the next chapter.

The G60 supports password entry from a local or remote connection.

Local access is defined as any access to settings or commands via the faceplate interface. This includes both keypad entry and the faceplate RS232 connection. Remote access is defined as any access to settings or commands via any rear communications port. This includes both Ethernet and RS485 connections. Any changes to the local or remote passwords enables this functionality.

To enter the initial setting (or command) password, proceed as follows:

1. Press the MENU key until the **SETTINGS** header flashes momentarily and the **PRODUCT SETUP** message appears on the display.
2. Press the MESSAGE RIGHT key until the **ACCESS LEVEL** message appears on the display.
3. Press the MESSAGE DOWN key until the **CHANGE LOCAL PASSWORDS** message appears on the display.
4. Press the MESSAGE RIGHT key until the **CHANGE SETTING PASSWORD** or **CHANGE COMMAND PASSWORD** message appears on the display.

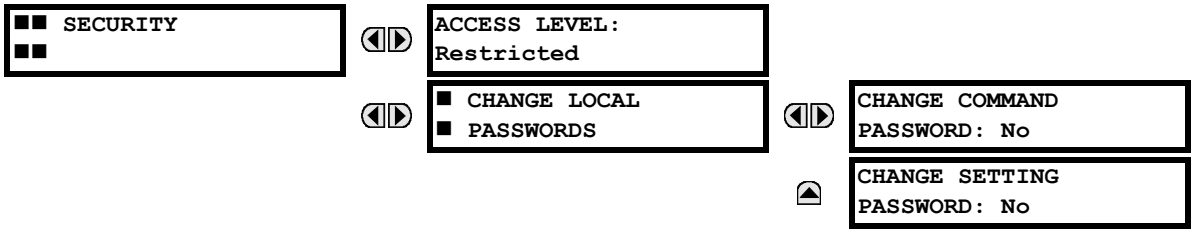

5. After the **CHANGE...PASSWORD** message appears on the display, press the VALUE UP or DOWN key to change the selection to "Yes".
6. Press the ENTER key and the display prompts you to **ENTER NEW PASSWORD**.
7. Type in a password and press the ENTER key.
8. When the **VERIFY NEW PASSWORD** is displayed, re-type in the same password and press ENTER.

9. When the **NEW PASSWORD HAS BEEN STORED** message appears, your new Setting (or Command) Password will be active.

f) CHANGING EXISTING PASSWORD

To change an existing password, follow the instructions in the previous section with the following exception. A message prompts you to type in the existing password (for each security level) before a new password can be entered.

g) INVALID PASSWORD ENTRY

By default, when an incorrect Command or Setting password has been entered via the faceplate interface three times within three minutes, the LOCAL ACCESS DENIED FlexLogic operand is set to "On" and the G60 does not allow settings or command level access via the faceplate interface for the next five minutes.

By default, when an incorrect Command or Setting password has been entered via any external communications interface three times within three minutes, the REMOTE ACCESS DENIED FlexLogic operand is set to "On" and the G60 does not allow settings or command access via the any external communications interface for five minutes. The REMOTE ACCESS DENIED FlexLogic operand is set to "Off" after five minutes for a Command password or 30 minutes for a Settings password.

These default settings can be changed in EnerVista under **Settings > Product Setup > Security**.

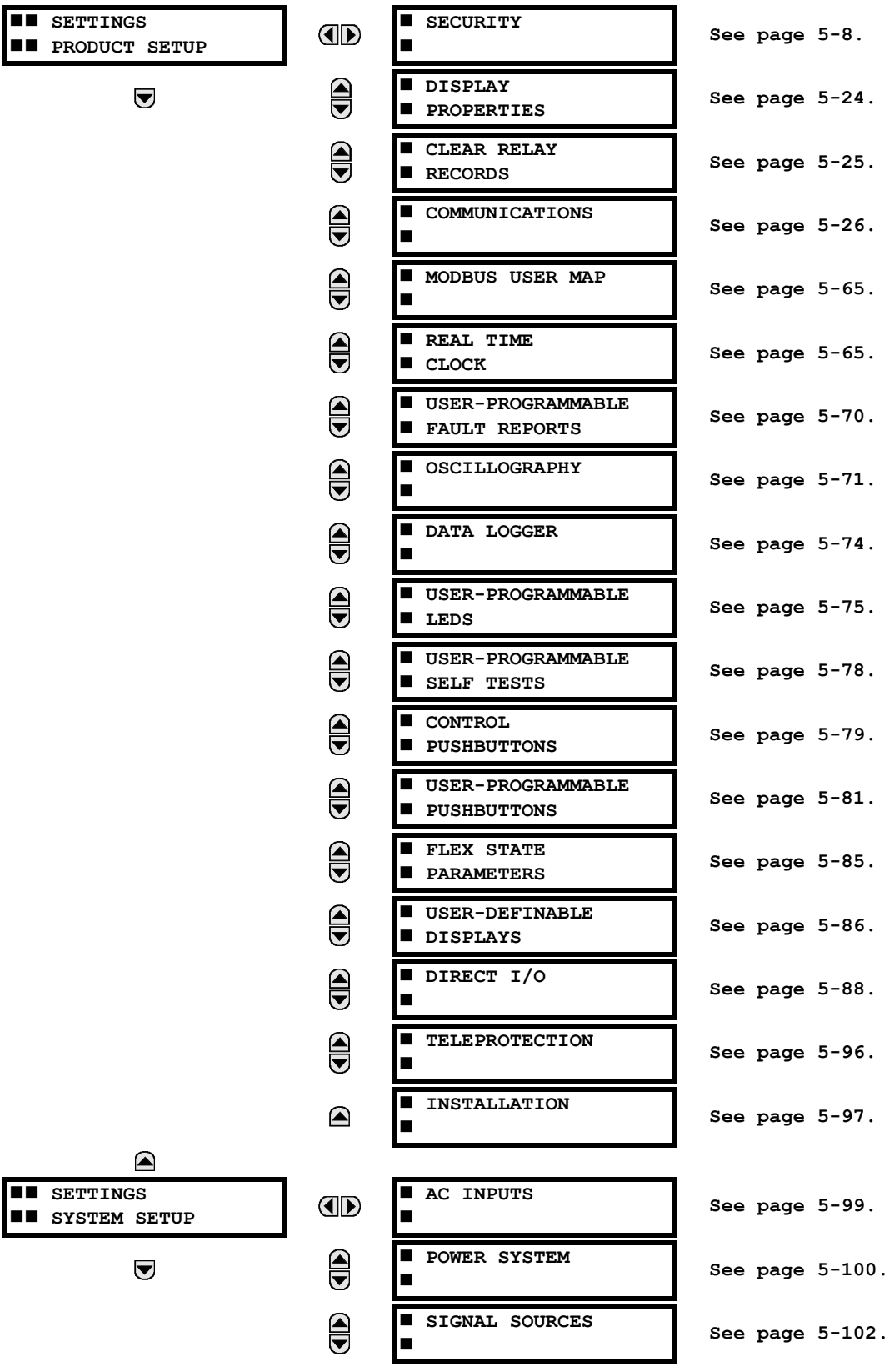
SETTINGS
PRODUCT SETUP
SECURITY
See page 5-8.
DISPLAY PROPERTIES
See page 5-24.
CLEAR RELAY RECORDS
See page 5-25.
COMMUNICATIONS
See page 5-26.
MODBUS USER MAP
See page 5-65.
REAL TIME CLOCK
See page 5-65.
USER-PROGRAMMABLE FAULT REPORTS
See page 5-70.
OSCILLOGRAPHY
See page 5-71.
DATA LOGGER
See page 5-74.
USER-PROGRAMMABLE LEDS
See page 5-75.
USER-PROGRAMMABLE SELF TESTS
See page 5-78.
CONTROL PUSHBUTTONS
See page 5-79.
USER-PROGRAMMABLE PUSHBUTTONS
See page 5-81.
FLEX STATE PARAMETERS
See page 5-85.
USER-DEFINABLE DISPLAYS
See page 5-86.
DIRECT I/O
See page 5-88.
TELEPROTECTION
See page 5-96.
INSTALLATION
See page 5-97.
SETTINGS
SYSTEM SETUP
AC INPUTS
See page 5-99.
POWER SYSTEM
See page 5-100.
SIGNAL SOURCES
See page 5-102.

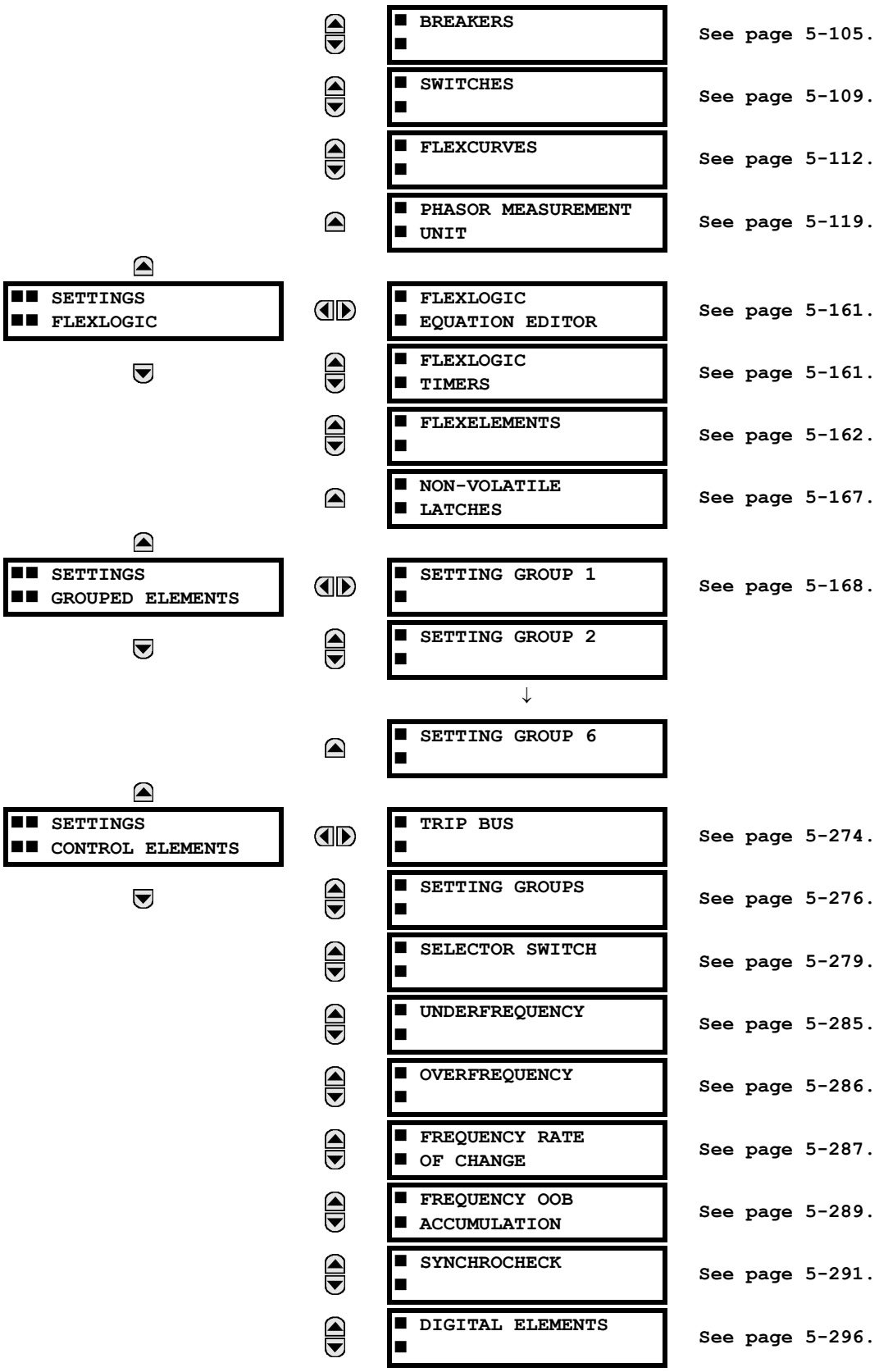
SETTINGS
FLEXLOGIC
SETTINGS
GROUPED ELEMENTS
SETTINGS
CONTROL ELEMENTS
BREAKERS
See page 5-105.
SWITCHES
See page 5-109.
FLEXCURVES
See page 5-112.
PHASOR MEASUREMENT UNIT
See page 5-119.
FLEXLOGIC EQUATION EDITOR
See page 5-161.
FLEXLOGIC TIMERS
See page 5-161.
FLEXELEMENTS
See page 5-162.
NON-VOLATILE LATCHES
See page 5-167.
SETTING GROUP 1
See page 5-168.
SETTING GROUP 2
SETTING GROUP 6
TRIP BUS
See page 5-274.
SETTING GROUPS
See page 5-276.
SELECTOR SWITCH
See page 5-279.
UNDERFREQUENCY
See page 5-285.
OVERFREQUENCY
See page 5-286.
FREQUENCY RATE OF CHANGE
See page 5-287.
FREQUENCY OOB ACCUMULATION
See page 5-289.
SYNCHROCHECK
See page 5-291.
DIGITAL ELEMENTS
See page 5-296.

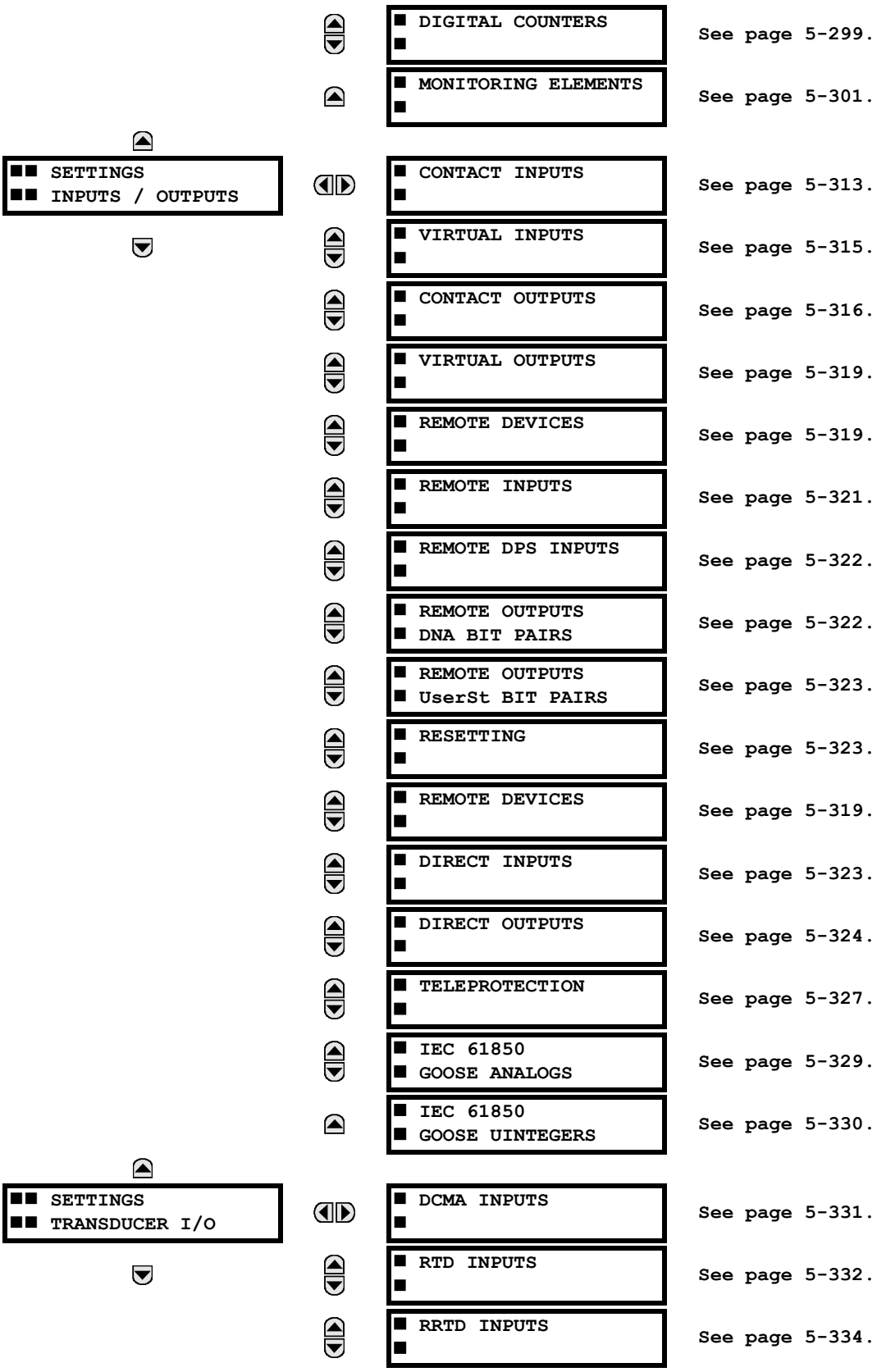
SETTINGS
INPUTS / OUTPUTS
DIGITAL COUNTERS
See page 5-299.
MONITORING ELEMENTS
See page 5-301.
CONTACT INPUTS
See page 5-313.
VIRTUAL INPUTS
See page 5-315.
CONTACT OUTPUTS
See page 5-316.
VIRTUAL OUTPUTS
See page 5-319.
REMOTE DEVICES
See page 5-319.
REMOTE INPUTS
See page 5-321.
REMOTE DPS INPUTS
See page 5-322.
REMOTE OUTPUTS
DNA BIT PAIRS
See page 5-322.
REMOTE OUTPUTS
UserSt BIT PAIRS
See page 5-323.
RESETTING
See page 5-323.
REMOTE DEVICES
See page 5-319.
DIRECT INPUTS
See page 5-323.
DIRECT OUTPUTS
See page 5-324.
TELEPROTECTION
See page 5-327.
IEC 61850
GOOSE ANALOGS
See page 5-329.
IEC 61850
GOOSE UINTEGERS
See page 5-330.
SETTINGS
TRANSDUCER I/O
DCMA INPUTS
See page 5-331.
RTD INPUTS
See page 5-332.
RRTD INPUTS
See page 5-334.

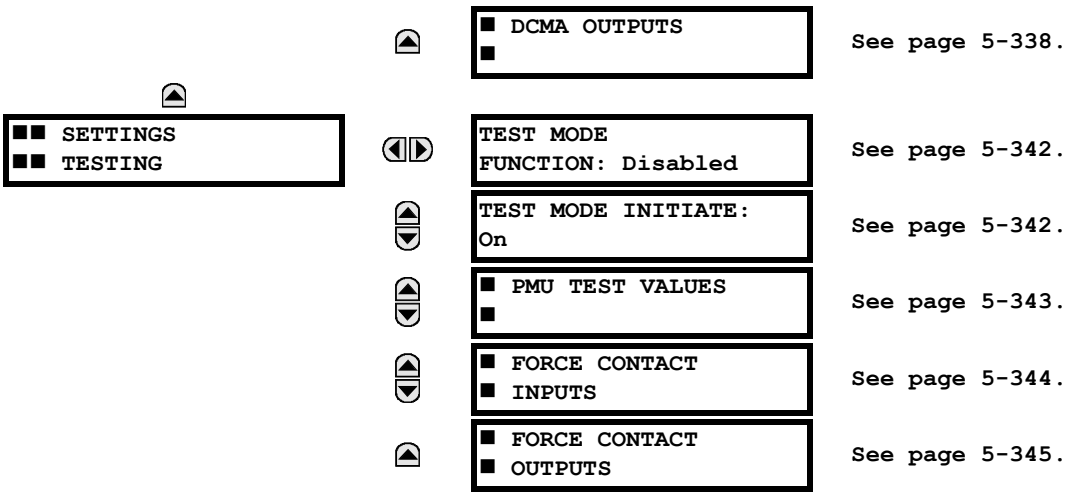

5.1.2 INTRODUCTION TO ELEMENTS

In the design of UR relays, the term *element* is used to describe a feature that is based around a comparator. The comparator is provided with an input (or set of inputs) that is tested against a programmed setting (or group of settings) to determine if the input is within the defined range that will set the output to logic 1, also referred to as *setting the flag*. A single comparator may make multiple tests and provide multiple outputs; for example, the time overcurrent comparator sets a pickup flag when the current input is above the setting and sets an operate flag when the input current has been at a level above the pickup setting for the time specified by the time-current curve settings. All comparators use analog actual values as the input.

NOTE

An exception to this rule is digital elements, which use logic states as inputs.

Elements are arranged into two classes, *grouped* and *control*. Each element classed as a grouped element is provided with six alternate sets of settings, in setting groups numbered 1 through 6. The performance of a grouped element is defined by the setting group that is active at a given time. The performance of a control element is independent of the selected active setting group.

The main characteristics of an element are shown on the element logic diagram. This includes the inputs, settings, fixed logic, and the output operands generated (abbreviations used on scheme logic diagrams are defined in Appendix F).

Some settings are specified in per-unit (pu) calculated quantities:

pu quantity = (actual quantity) / (base quantity)

Where the current source is from a single CT, the *base quantity* is the nominal secondary or primary current of the CT. Use the secondary current base to convert per-unit current settings to/from a secondary current value, and use the primary current base to convert to/from a primary current value.

Where the current source is the sum of two or more CTs with different nominal primary current, the primary base quantity is the largest nominal primary current. For example, if CT1 = 300 / 5 A and CT2 = 100 / 1 A, then in order to sum these, CT2 is scaled to the CT1 ratio. In this case, the base quantity is 300 A primary, 5 A secondary for CT1, and 300/(100/1) = 3 A secondary for CT2.

For voltage elements the primary base quantity is the nominal phase-to-phase primary voltage of the protected system provided that the VT ratio setting is set to the nominal ratio of the VTs and the secondary voltage setting is set to the phase-to-phase voltage seen by the relay when the voltage of the protected system in nominal. The UR uses the convention that nominal voltages in a three-phase system are phase-to-phase voltages.

For example, on a system with a 13.8 kV nominal primary voltage, the base quantity is 13800 V. With 14400:120 V delta-connected VTs, the secondary base quantity and secondary voltage setting is:

$$\frac{13800}{14400} \times 120 = 115 \text{ V} \qquad \textbf{(EQ 5.1)}$$

For wye-connected VTs, the primary and secondary bases quanitities are as before, but the secondary voltage (here a phase-to-phase ground value) is:

$$\frac{13800}{14400} \times \frac{120}{\sqrt{3}} = 66.4 \text{ V} \quad \textbf{(EQ 5.2)}$$

Many settings are common to most elements and are discussed below:

- **FUNCTION setting:** This setting programs the element to be operational when selected as “Enabled”. The factory default is “Disabled”. Once programmed to “Enabled”, any element associated with the function becomes active and all options become available.
- **NAME setting:** This setting is used to uniquely identify the element.
- **SOURCE setting:** This setting is used to select the AC source to be monitored. See the Introduction to AC Sources section later.
- **PICKUP setting:** For simple elements, this setting is used to program the level of the measured parameter above or below which the pickup state is established. In more complex elements, a set of settings may be provided to define the range of the measured parameters which will cause the element to pickup.
- **PICKUP DELAY setting:** This setting sets a time-delay-on-pickup, or on-delay, for the duration between the pickup and operate output states.
- **RESET DELAY setting:** This setting is used to set a time-delay-on-dropout, or off-delay, for the duration between the Operate output state and the return to logic 0 after the input transits outside the defined pickup range.
- **BLOCK setting:** The default output operand state of all comparators is a logic 0 or “flag not set”. The comparator remains in this default state until a logic 1 is asserted at the RUN input, allowing the test to be performed. If the RUN input changes to logic 0 at any time, the comparator returns to the default state. The RUN input is used to supervise the comparator. The BLOCK input is used as one of the inputs to RUN control.
- **TARGET setting:** This setting is used to define the operation of an element target message. When set to **“**Disabled**”**, no target message or illumination of a faceplate LED indicator is issued upon operation of the element. When set to “Self-Reset”, the target message and LED indication follow the operate state of the element, and self-resets once the operate element condition clears. When set to “Latched”, the target message and LED indication will remain visible after the element output returns to logic 0 until a RESET command is received by the relay.
- **EVENTS setting:** This setting is used to control whether the pickup, dropout or operate states are recorded by the event recorder. When set to “Disabled”, element pickup, dropout or operate are not recorded as events. When set to “Enabled”, events are created for:

  (Element) PKP (pickup)
  (Element) DPO (dropout)
  (Element) OP (operate)

  The DPO event is created when the measure and decide comparator output transits from the pickup state (logic 1) to the dropout state (logic 0). This could happen when the element is in the operate state if the reset delay time is not 0.

  Not every operand of a given element in a UR relay generates events, only the major output operands. Elements, asserting output per phase, log operating phase output only, without asserting the common three-phase operand event.

5.1.3 INTRODUCTION TO AC SOURCES

a) BACKGROUND

A mechanism called a *source* configures the routing of CT and VT input channels to measurement sub-systems. Sources, in the context of UR series relays, refer to the logical grouping of current and voltage signals such that one source contains all the signals required to measure the load or fault in a particular power apparatus. A given source may contain all or some of the following signals: three-phase currents, single-phase ground current, three-phase voltages and an auxiliary voltage from a single VT for checking for synchronism.

The basic idea of an AC source is to select a point on the power system where the voltages and currents are of interest. To illustrate the concept of sources, as applied to current inputs only, consider the breaker-and-a-half scheme below. (The breaker-and-a-half scheme is used for illustrative purposes and is available on select UR products.) In this application, the current flows as shown by the arrows. Some current flows through the upper bus bar to some other location or power

equipment, and some current flows into transformer winding 1. The current into winding 1 is the phasor sum (or difference) of the currents in CT1 and CT2 (whether the sum or difference is used depends on the relative polarity of the CT connections). The same considerations apply to transformer winding 2. The protection elements require access to the net current for transformer protection, but some elements may need access to the individual currents from CT1 and CT2.

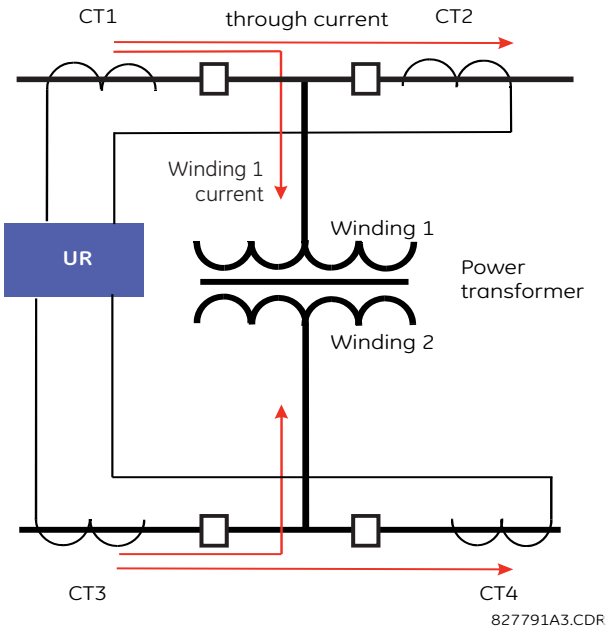

Figure 5–1: BREAKER-AND-A-HALF SCHEME

In conventional analog or electronic relays, the sum of the currents is obtained from an appropriate external connection of all CTs through which any portion of the current for the element being protected could flow. Auxiliary CTs are required to perform ratio matching if the ratios of the primary CTs to be summed are not identical. In the UR series of relays, provisions have been included for all the current signals to be brought to the UR device where grouping, ratio correction and summation are applied internally via configuration settings.

A major advantage of using internal summation is that the individual currents are available to the protection device; for example, as additional information to calculate a restraint current, or to allow the provision of additional protection features that operate on the individual currents such as breaker failure.

Given the flexibility of this approach, it becomes necessary to add configuration settings to the platform to allow the user to select which sets of CT inputs will be added to form the net current into the protected device.

The internal grouping of current and voltage signals forms an AC source. This source can be given a specific name through the settings, and becomes available to protection and metering elements in the UR platform. Individual names can be given to each source to help identify them more clearly for later use. For example, in the scheme shown in the above diagram, the user configures one source to be the sum of CT1 and CT2 and can name this source as “Wdg1 I”.

Once the sources have been configured, the user has them available as selections for the choice of input signal for the protection elements and as metered quantities.

b) CT/VT MODULE CONFIGURATION

CT and VT input channels are contained in CT/VT modules. The type of input channel can be phase/neutral/other voltage, phase/ground current, or sensitive ground current. The CT/VT modules calculate total waveform RMS levels, fundamental frequency phasors, symmetrical components and harmonics for voltage or current, as allowed by the hardware in each channel. These modules may calculate other parameters as directed by the CPU module.

A CT/VT module contains up to eight input channels, numbered 1 through 8. The channel numbering corresponds to the module terminal numbering 1 through 8 and is arranged as follows: Channels 1, 2, 3, and 4 are always provided as a group, hereafter called a “bank,” and all four are either current or voltage, as are channels 5, 6, 7, and 8. Channels 1, 2, 3 and 5, 6, 7 are arranged as phase A, B and C respectively. Channels 4 and 8 are either another current or voltage.

Banks are ordered sequentially from the block of lower-numbered channels to the block of higher-numbered channels, and from the CT/VT module with the lowest slot position letter to the module with the highest slot position letter, as follows:

INCREASING SLOT POSITION LETTER -->		
CT/VT MODULE 1	**CT/VT MODULE 2**	**CT/VT MODULE 3**
< bank 1 >	< bank 3 >	< bank 5 >
< bank 2 >	< bank 4 >	< bank 6 >

The UR platform allows for a maximum of six sets of three-phase voltages and six sets of three-phase currents. The result of these restrictions leads to the maximum number of CT/VT modules in a chassis to three. The maximum number of sources is six. A summary of CT/VT module configurations is shown below.

ITEM	MAXIMUM NUMBER
CT/VT Module	2
CT Bank (3 phase channels, 1 ground channel)	4
VT Bank (3 phase channels, 1 auxiliary channel)	

c) CT/VT INPUT CHANNEL CONFIGURATION

Upon relay startup, configuration settings for every bank of current or voltage input channels in the relay are automatically generated from the order code. Within each bank, a channel identification label is automatically assigned to each bank of channels in a given product. The *bank* naming convention is based on the physical location of the channels, required by the user to know how to connect the relay to external circuits. Bank identification consists of the letter designation of the slot in which the CT/VT module is mounted as the first character, followed by numbers indicating the channel, either 1 or 5. See the HardFiber instruction manual for designations of HardFiber voltage and current banks.

For three-phase channel sets, the number of the lowest numbered channel identifies the set. For example, F1 represents the three-phase channel set of F1/F2/F3, where F is the slot letter and 1 is the first channel of the set of three channels.

Upon startup, the CPU configures the settings required to characterize the current and voltage inputs, and will display them in the appropriate section in the sequence of the banks (as described above) as follows for a maximum configuration: F1, F5, M1, M5, U1, and U5.

a) SECURITY OVERVIEW

The following security features are available:

- Password security — Basic security present in the default offering of the product
- EnerVista security — Role-based access to various EnerVista software screens and configuration elements. The feature is available in the default offering of the product and only in the EnerVista software.
- CyberSentry security — Advanced security options available as a software option. When purchased, the options are automatically enabled, and the default Password security and EnerVista security are disabled.

Changing the password, or any other setting, does not take the relay out of service. The relay is taken out of service when a settings file is written to it.

LOST PASSWORD

If all passwords are lost, reset the unit to default values. Follow the instructions outlined later for **COMMANDS ⇨⇩ RELAY MAINTENANCE ⇨ SERVICE COMMAND**. Note that the relay is reset to default values, not just the passwords.

Then for CyberSentry, change the default password of ChangeMe1# as outlined in the Set Up CyberSentry and Change Default Password section at the end of the Installation chapter.

PASSWORD REQUIREMENTS

A user account requires an alpha-numeric password that meets the following requirements:

- Password is case-sensitive
- Password cannot contain the user account name or parts of the user account that exceed two consecutive characters
- Password must be 6 to 20 characters in length
- Password must contain characters from three of the following four categories:
  - English uppercase characters (A through Z)
  - English lowercase characters (a through z)
  - Base 10 digits (0 through 9)
  - Non-alphabetic characters (for example, ~, !, @, #, $,%, &)

b) PASSWORD SECURITY

PATH: SETTINGS ⇨ PRODUCT SETUP ⇨ SECURITY

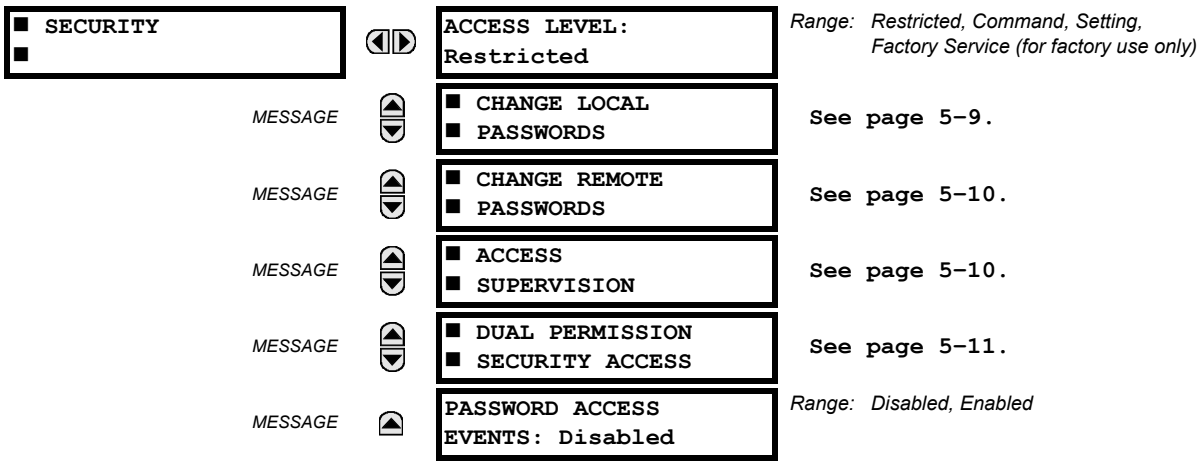

The G60 supports password entry from a local or remote connection.

Local access is defined as any access to settings or commands via the faceplate interface. This includes both keypad entry and the through the faceplate RS232 port. Remote access is defined as any access to settings or commands via any rear communications port. This includes both Ethernet and RS485 connections. Any changes to the local or remote passwords enables this functionality.

When entering a settings or command password via EnerVista or any serial interface, the user must enter the corresponding connection password. If the connection is to the back of the G60, the remote password must be used. If the connection is to the RS232 port of the faceplate, the local password must be used.

NOTE

For a relay without a CyberSentry software option, any user can activate the **RESET** button without password entry.

For the **ACCESS LEVEL**, the "Restricted" option means both settings and commands can be accessed, but there is no access to factory configuration. The "Factory Service" level is not available and intended for factory use only. In addition, there are two user security access levels, setting and command, for which you set a password for each. Use of a password for each level controls whether users can enter commands or change settings. Another option is to specify setting and/or command access for individual user accounts.

The **PASSWORD ACCESS EVENTS** settings allows recording of password access events in the event recorder.

The local setting and command sessions are initiated by the user through the front panel display and are disabled either by the user or by timeout (via the setting and command level access timeout settings). The remote setting and command sessions are initiated by the user through the EnerVista UR Setup software and are disabled either by the user or by timeout.

The state of the session (local or remote, setting or command) determines the state of the following FlexLogic operands.

- ACCESS LOC SETG OFF: Asserted when local setting access is disabled
- ACCESS LOC SETG ON: Asserted when local setting access is enabled
- ACCESS LOC CMND OFF: Asserted when local command access is disabled
- ACCESS LOC CMND ON: Asserted when local command access is enabled
- ACCESS REM SETG OFF: Asserted when remote setting access is disabled
- ACCESS REM SETG ON: Asserted when remote setting access is enabled
- ACCESS REM CMND OFF: Asserted when remote command access is disabled
- ACCESS REM CMND ON: Asserted when remote command access is enabled

NOTE

A command or setting write operation is required to update the state of the remote and local security operands listed.

LOCAL PASSWORDS

PATH: SETTINGS ⇨ PRODUCT SETUP ⇨ SECURITY ⇨⇩ CHANGE LOCAL PASSWORDS

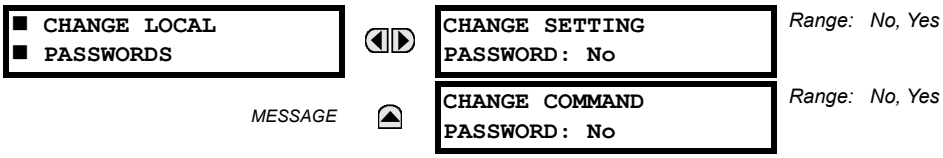

Proper password codes are required to enable each access level. When a **CHANGE COMMAND PASSWORD** or **CHANGE SETTING PASSWORD** setting is programmed to “Yes” via the front panel interface, the following message sequence is invoked:

1. ENTER NEW PASSWORD: _____.
2. VERIFY NEW PASSWORD: _____.
3. NEW PASSWORD HAS BEEN STORED.

To gain write access to a “Restricted” setting, program the **ACCESS LEVEL** setting in the main security menu to “Setting” and then change the setting, or attempt to change the setting and follow the prompt to enter the programmed password. If the password is correctly entered, access is allowed. Access automatically reverts to the “Restricted” level according to the access level timeout setting values.

NOTE

If the setting and command passwords are identical, then this one password allows access to both commands and settings.

If a remote connection is established, local passcodes are not visible.

REMOTE PASSWORDS

PATH: SETTINGS ⇨ PRODUCT SETUP ⇨ SECURITY ⇨⇩ CHANGE REMOTE PASSWORDS

```
■ CHANGE REMOTE
■ PASSWORDS
```

```
CHANGE SETTING
PASSWORD: No
```

Range: No, Yes

MESSAGE

```
CHANGE COMMAND
PASSWORD: No
```

Range: No, Yes

This menu displays when the **ACCESS LEVEL** setting is other than Restricted or Command.

Proper passwords are required to enable each command or setting level access.

To set the command or setting password:

1. In the EnerVista software, navigate to **Settings > Product Setup > Security** menu item to open the remote password settings window.
2. Click the command or setting password **Change** button.
3. Enter the new password in the **New Password** field. Requirements are outlined in the Password Requirements section at the beginning of the chapter. When an original password has already been used, enter it in the **Enter Password** field and click the **Send Password to Device** button.
4. Re-enter the password in the **Confirm Password** field.
5. Click the **OK** button. The password is checked to ensure that is meets requirements.

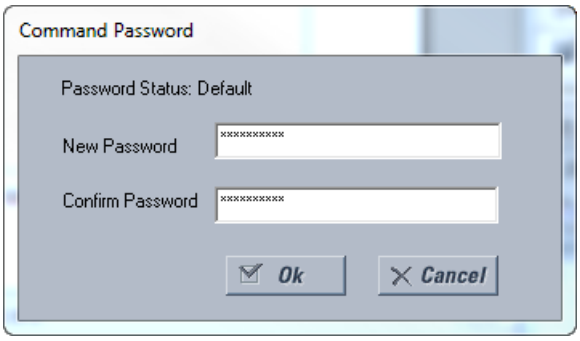

NOTE

If you establish a local connection to the relay (serial), you cannot view remote passcodes.

ACCESS SUPERVISION

PATH: SETTINGS ⇨ PRODUCT SETUP ⇨ SECURITY ⇨⇩ ACCESS SUPERVISION

```
■ ACCESS
■ SUPERVISION
```

```
■ ACCESS LEVEL
■ TIMEOUTS
```

MESSAGE

```
INVALID ATTEMPTS
BEFORE LOCKOUT: 3
```

Range: 2 to 5 in steps of 1

MESSAGE

```
PASSWORD LOCKOUT
DURATION: 5 min
```

Range: 5 to 60 minutes in steps of 1

This menu displays when the **ACCESS LEVEL** setting is other than Restricted or Command.

The following access supervision settings are available.

- **INVALID ATTEMPTS BEFORE LOCKOUT**: This setting specifies the number of times an incorrect password can be entered within a three-minute time span before lockout occurs. When lockout occurs, the LOCAL ACCESS DENIED or

REMOTE ACCESS DENIED FlexLogic operands are set to “On”. These operands are returned to the “Off” state upon expiration of the lockout.

- **PASSWORD LOCKOUT DURATION**: This setting specifies the time that the G60 will lockout password access after the number of invalid password entries specified by the **INVALID ATTEMPTS BEFORE LOCKOUT** setting has occurred.

The G60 provides a means to raise an alarm upon failed password entry. Should password verification fail while accessing a password-protected level of the relay (either settings or commands), the UNAUTHORIZED ACCESS FlexLogic operand is asserted. The operand can be programmed to raise an alarm via contact outputs or communications. This feature can be used to protect against both unauthorized and accidental access attempts.

The UNAUTHORIZED ACCESS operand is reset with the **COMMANDS ⇨⇩ CLEAR RECORDS ⇨⇩ RESET UNAUTHORIZED ALARMS** command. Therefore, to apply this feature with security, the command level should be password-protected. The operand does not generate events or targets.

If events or targets are required, the UNAUTHORIZED ACCESS operand can be assigned to a digital element programmed with event logs or targets enabled.

The access level timeout settings are shown below.

PATH: SETTINGS ⇨ PRODUCT SETUP ⇨ SECURITY ⇨⇩ ACCESS SUPERVISION ⇨ ACCESS LEVEL TIMEOUTS

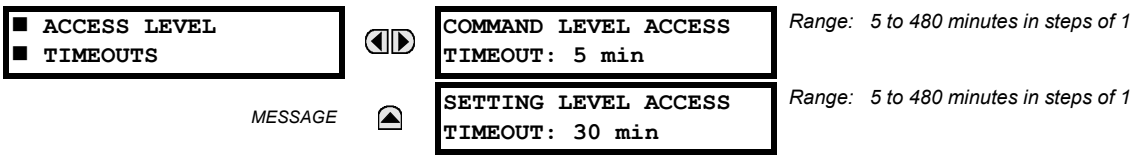

These settings allow the user to specify the length of inactivity required before returning to the restricted access level. Note that the access level will set as restricted if control power is cycled.

- **COMMAND LEVEL ACCESS TIMEOUT**: This setting specifies the length of inactivity (no local or remote access) required to return to restricted access from the command password level.
- **SETTING LEVEL ACCESS TIMEOUT**: This setting specifies the length of inactivity (no local or remote access) required to return to restricted access from the settings password level.

DUAL PERMISSION SECURITY ACCESS

PATH: SETTINGS ⇨ PRODUCT SETUP ⇨ SECURITY ⇨⇩ DUAL PERMISSION SECURITY ACCESS

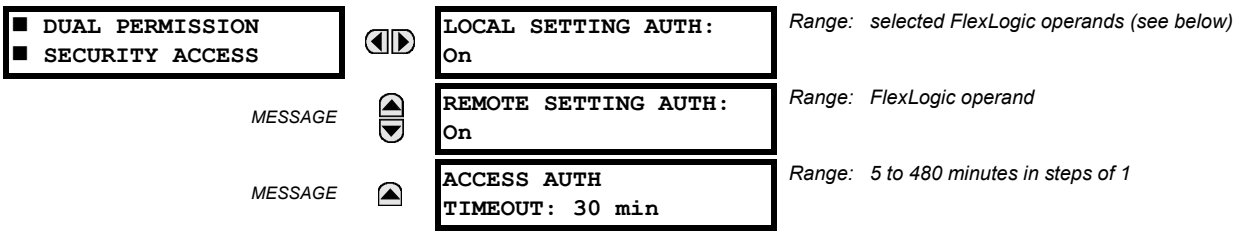

This menu displays when the **ACCESS LEVEL** setting is other than Restricted or Command.

The dual permission security access feature provides a mechanism for customers to prevent unauthorized or unintended upload of settings to a relay through the local or remote interfaces interface.

The following settings are available through the local (front panel) interface only.

- **LOCAL SETTING AUTH**: This setting is used for local (front panel or RS232 interface) setting access supervision. Valid values for the FlexLogic operands are either “On” (default) or any physical “Contact Input ~~ On” value.

  If this setting is “On“, then local setting access functions as normal; that is, a local setting password is required. If this setting is any contact input on FlexLogic operand, then the operand must be asserted (set as on) prior to providing the local setting password to gain setting access.

  If setting access is *not* authorized for local operation (front panel or RS232 interface) and the user attempts to obtain setting access, then the **UNAUTHORIZED ACCESS** message is displayed on the front panel.

  If this setting is "Off," firmware upgrades are blocked. If this setting is "On," firmware upgrades are allowed.
- **REMOTE SETTING AUTH**: This setting is used for remote (Ethernet or RS485 interfaces) setting access supervision.

If this setting is “On” (the default setting), then remote setting access functions as normal; that is, a remote password is required). If this setting is “Off”, then remote setting access is blocked even if the correct remote setting password is provided. If this setting is any other FlexLogic operand, then the operand must be asserted (set as on) prior to providing the remote setting password to gain setting access.

If this setting is "Off," firmware upgrades are blocked. If this setting is "On," firmware upgrades are allowed.

- **ACCESS AUTH TIMEOUT**: This setting represents the timeout delay for local setting access. This setting is applicable when the **LOCAL SETTING AUTH** setting is programmed to any operand except “On”. The state of the FlexLogic operand is continuously monitored for an off-to-on transition. When this occurs, local access is permitted and the timer programmed with the **ACCESS AUTH TIMEOUT** setting value is started. When this timer expires, local setting access is immediately denied. If access is permitted and an off-to-on transition of the FlexLogic operand is detected, the timeout is restarted. The status of this timer is updated every five seconds.

The following settings are available through the remote (EnerVista UR Setup) interface only. Select the **Settings > Product Setup > Security** menu item to display the security settings window.

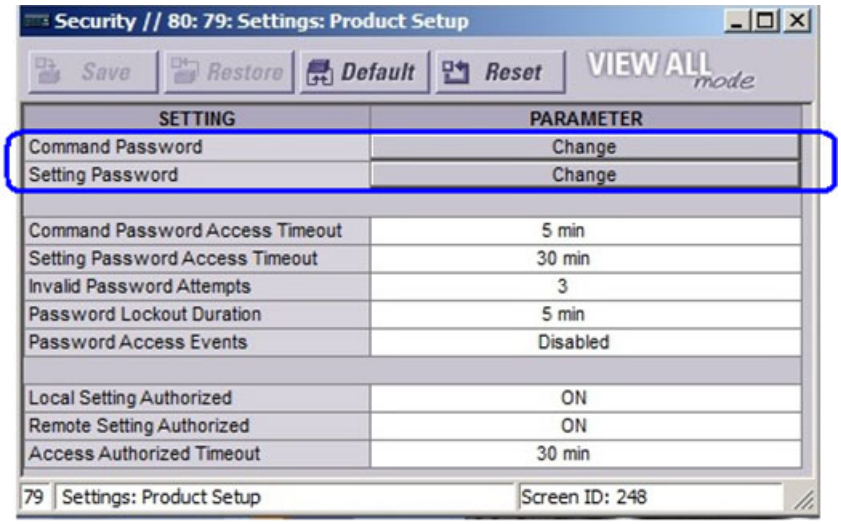

The **Remote Settings Authorized** setting is used for remote (Ethernet or RS485 interfaces) setting access supervision. If this setting is “On” (the default setting), then remote setting access functions as normal; that is, a remote password is required. If this setting is “Off”, then remote setting access is blocked even if the correct remote setting password is provided. If this setting is any other FlexLogic operand, then the operand must be asserted (set as on) prior to providing the remote setting password to gain setting access.

The **Access Authorized Timeout** setting represents the timeout delay remote setting access. This setting is applicable when the **Remote Settings Authorized** setting is programmed to any operand except “On” or “Off”. The state of the FlexLogic operand is continuously monitored for an off-to-on transition. When this occurs, remote setting access is permitted and the timer programmed with the **Access Authorized Timeout** setting value is started. When this timer expires, remote setting access is immediately denied. If access is permitted and an off-to-on transition of the FlexLogic operand is detected, the timeout is restarted. The status of this timer is updated every five seconds.

c) ENERVISTA SECURITY

ENABLING THE SECURITY MANAGEMENT SYSTEM

Access to files is controlled by the operating system and EnerVista software as follows:

- Access privileges to files are defined by the Windows operating system. A standard user does not have access to a file created by an administrator or another user.
- When the EnerVista UR Setup software security system is disabled (passwords are not required), all users have administrator access

The EnerVista security system allows an administrator to manage access privileges of multiple users of EnerVista. It is disabled by default to allow access to the device immediately after installation. When security is disabled, all users have administrator access. GE recommends enabling the EnerVista security before placing the device in service.

To enable the security system and require password use:

1. Select the **Security > User Management** menu item to open the user management window.

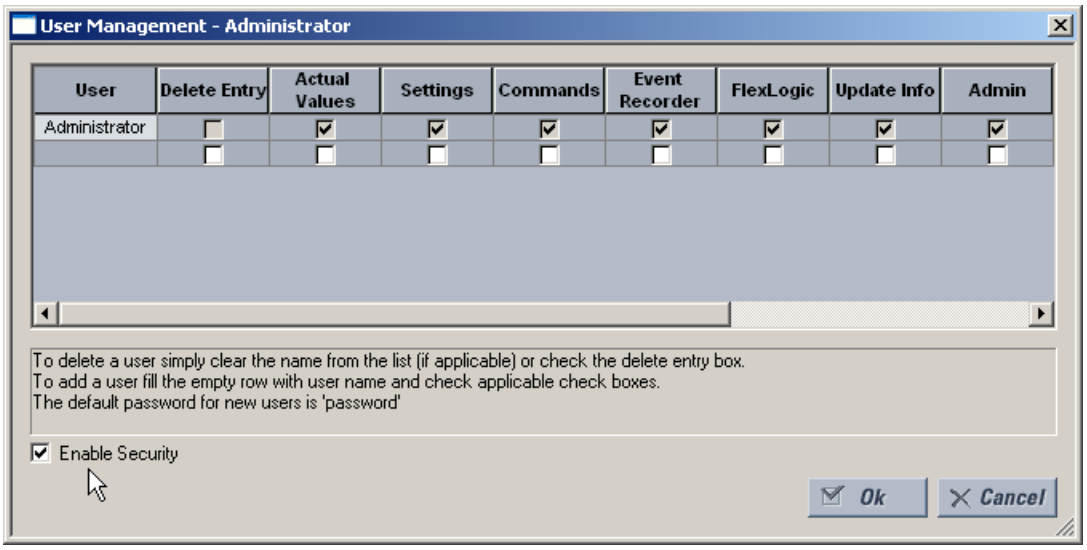

2. Check the **Enable Security** box in the lower-left corner to enable the security management system.

NOTE

If you force password entry using this feature, ensure that you know the Administrator password. If you do not know the password and are locked out of the software, reset the device to factory defaults as outlined later for **COMMANDS ⇨⇩ RELAY MAINTENANCE ⇨ SERVICE COMMAND**. When using CyberSentry, the default password is "ChangeMe1#".

Security is now enabled for the EnerVista UR Setup software. Upon starting the software, users are now required to enter a username and password.

ADDING A NEW USER

The following pre-requisites are required to add user accounts to the EnerVista security management system:

- The user adding the account must have administrator rights
- The EnerVista security management system must be enabled (previous section)

To add user accounts:

1. Select the **Security > User Management** menu item to open the user management window.
2. Enter a username in the **User** field. The username must be 4 to 20 characters in length.

3. Select the user access rights by enabling the check box of one or more of the fields.

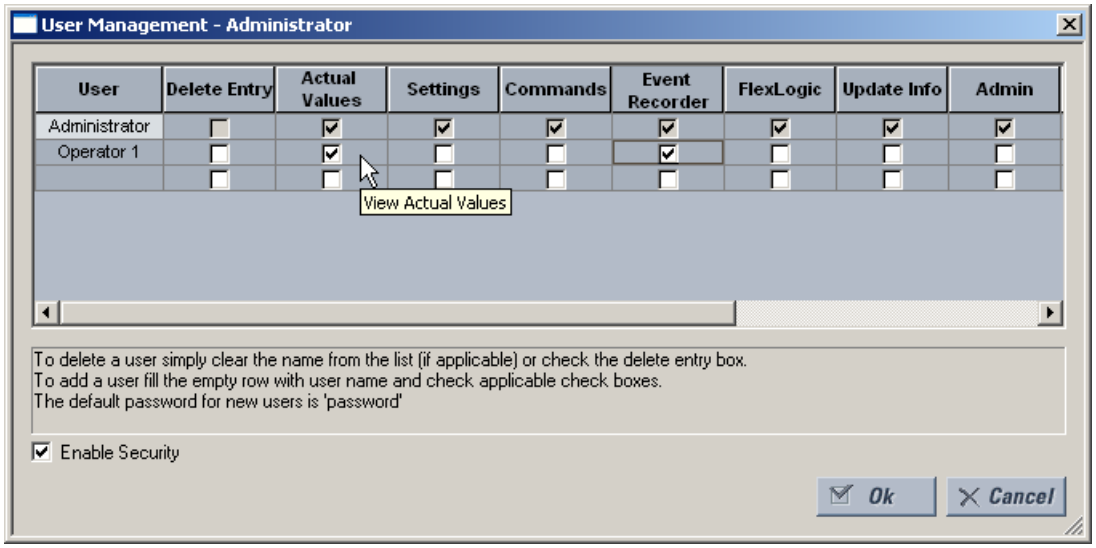

The table outlines access rights.

Table 5–1: ACCESS RIGHTS SUMMARY

FIELD	DESCRIPTION
Delete Entry	Deletes the user account when exiting the user management window
Actual Values	Allows the user to read actual values
Settings	Allows the user to read setting values
Commands	Allows the user to execute commands
Event Recorder	Allows the user to use the digital fault recorder
FlexLogic	Allows the user to read FlexLogic values
Update Info	Allows the user to write to any function to which they have read privileges. When any of the Settings, Event Recorder, and FlexLogic check boxes are enabled by themselves, the user is granted read access. When any of them are enabled in conjunction with the Update Info box, they are granted read and write access. The user is not granted write access to functions that are not checked, even if the Update Info field is checked.
Admin	The user is an EnerVista UR Setup administrator, therefore receiving all of the administrative rights. Exercise caution when granting administrator rights.

4. Click **OK** to add the user account to the security management system.

MODIFYING USER PRIVILEGES

The following pre-requisites are required to modify user privileges in the EnerVista security management system:

- The user modifying the privileges must have administrator rights
- The EnerVista security management system must be enabled

To modify user privileges:

1. Select the **Security > User Management** menu item to open the user management window.
2. Locate the username in the **User** field.

3. Modify the user access rights by enabling or disabling one or more of the check boxes.

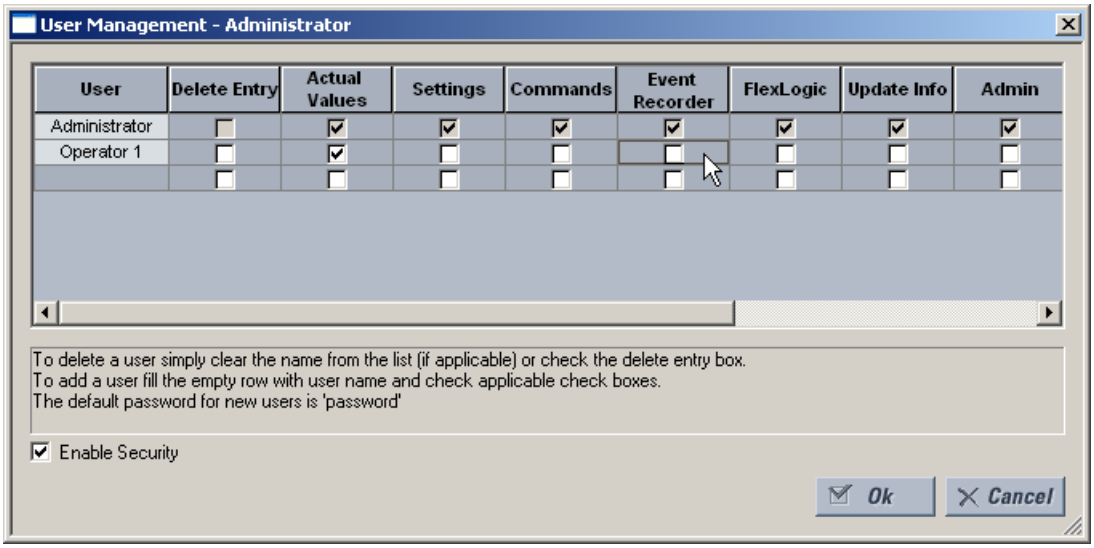

The table outlines access rights.

Table 5–2: ACCESS RIGHTS SUMMARY

FIELD	DESCRIPTION
Delete Entry	Deletes the user account when exiting the user management window
Actual Values	Allows the user to read actual values
Settings	Allows the user to read setting values
Commands	Allows the user to execute commands
Event Recorder	Allows the user to use the digital fault recorder
FlexLogic	Allows the user to read FlexLogic values
Update Info	Allows the user to write to any function to which they have read privileges. When any of the Settings, Event Recorder, and FlexLogic check boxes are enabled by themselves, the user is granted read access. When any of them are enabled in conjunction with the Update Info box, they are granted read and write access. The user is not granted write access to functions that are not checked, even if the Update Info field is checked.
Admin	The user is an EnerVista UR Setup administrator, therefore receiving all of the administrative rights. Exercise caution when granting administrator rights.

4. Click **OK** to save the changes.

d) CYBERSENTRY SECURITY

The EnerVista software provides the means to configure and authenticate UR using either server or device or authentication. Access to various functionality depends on user role.

The login screen of EnerVista has two options for access to the UR, server and device authentication.

Figure 5–2: LOGIN SCREEN FOR CYBERSENTRY

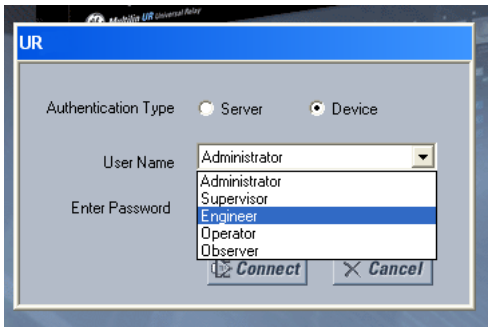

When the "Server" Authentication Type option is selected, the UR uses the RADIUS server and not its local authentication database to authenticate the user.

When the "Device" button is selected, the UR uses its local authentication database and not the RADIUS server to authenticate the user. In this case, it uses built-in roles (Administrator, Engineer, Supervisor, Operator, Observer, or Administrator and Supervisor when Device Authentication is disabled) as login accounts and the associated passwords are stored on the UR device. In this case, access is not user-attributable. In cases where user-attributable access is required, especially for auditable processes for compliance reasons, use server authentication (RADIUS) only.

No password or security information is displayed in plain text by the EnerVista software or UR device, nor are they ever transmitted without cryptographic protection.

NOTE

Only (TCP/UDP) ports and services that are needed for device configuration and for customer enabled features are open. All the other ports are closed. For example, Modbus is on by default, so its TCP port number, 502, is open. But if Modbus is disabled, port 502 is closed. This function has been tested and no unused ports have been found open.

When CyberSentry is enabled, Modbus communications over Ethernet is encrypted, which is not always tolerated by SCADA systems. The UR has a bypass access feature for such situations, which allows unencrypted Modbus over Ethernet. The **BYPASS ACCESS** setting is available on the **SETTINGS ⇨ PRODUCT SETUP ⇨ SECURITY ⇨⇩ SUPERVISORY** screen. Note that other protocols (DNP, 101, 103, 104, EGD) are not encrypted, and they are good communications options for SCADA systems when CyberSentry is enabled.

When using the rear RS485 port and CyberSentry, registers can be read with a maximum buffer of 64 bytes. Settings may or may not be written, so use another port or configure the **SERIAL INACTIVITY TIMEOUT** setting to a high value, such as eight minutes, to give the relay enough time to finish the task.

CYBERSENTRY SETTINGS THROUGH ENERVISTA

CyberSentry security settings are configured under **Device > Settings > Product Setup > Security**.

For the **Device > Settings > Product Setup > Supervisory** option, the panel looks like the following.

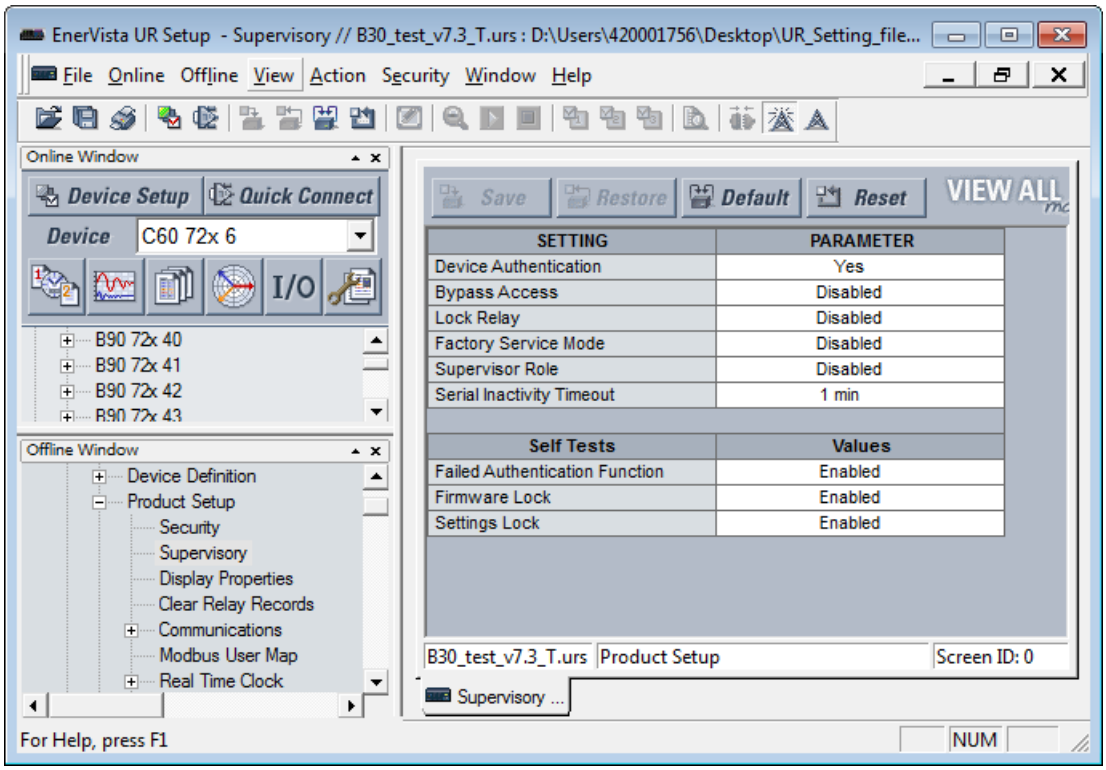

Figure 5–3: SUPERVISORY PANEL

For the Security panel, the following settings are available.

RADIUS Server Settings

SETTING NAME	DESCRIPTION	MIN	MAX	DEFAULT	UNITS	MINIMUM PERMISSION
Primary RADIUS IP Address	IP address of the main RADIUS server. Default value indicates no Primary RADIUS server is configured, and hence RADIUS is disabled. Restart the relay for any change to take effect.	0.0.0.0	223.255.255.254	0.0.0.0	-	Administrator
Primary Authentication Port	RADIUS authentication port	1	65535	1812	-	Administrator
Primary Accounting Port	RADIUS accounting port	1	65535	1813	-	Administrator
Vendor ID	An identifier that specifies RADIUS vendor-specific attributes used with the protocol			Value that represents General Electric		Administrator
RADIUS Authentication (Shared) Secret	Shared secret used in authentication. It displays as asterisks. This setting must meet the CyberSentry password requirements.	See the *Password Requirements* section	See the following password section for requirements	N/A	-	Administrator
RADIUS Authentication Method	Authentication method used by RADIUS server. Currently fixed to EAP-TTLS.	EAP-TTLS	EAP-TTLS	EAP-TTLS	-	Administrator
Confirm RADIUS Authentication (Shared) Secret	Confirmation of the shared secret. The entry displays as asterisks.	See the *Password Requirements* section	245 characters	N/A	-	Administrator

General Security Settings

SETTING NAME	DESCRIPTION	MIN	MAX	DEFAULT	UNITS	MINIMUM PERMISSION
Session Lockout	Number of failed authentications before the device blocks subsequent authentication attempts for the lockout period	0 (lockout disabled)	99	3	-	Administrator
Session Lockout Period	The period in minutes that a user is prevented from logging in after being locked out	0 (no period)	9999	3	min	Administrator
Syslog Server IP Address	The IP address of the target Syslog server to which all security events are transmitted	0.0.0.0	223.255.255.254	0.0.0.0	-	Administrator
Syslog Server Port Number	The UDP port number of the target syslog server to which all security events are transmitted	1	65535	514	-	Administrator
Device Authentication	When enabled, local device authentication with roles is allowed. When disabled, the UR only authenticates to the AAA server (RADIUS). **NOTE:** Administrator and Supervisor (if still enabled) remain active even after device authentication is disabled. The only permission for local Administrator is to re-enable device authentication when device authentication is disabled. To re-enable device authentication, the Supervisor unlocks the device for setting changes, and then the Administrator can re-enable device authentication.	Disabled	Enabled	Enabled	-	Administrator
Firmware Locked	Indicates if the device receives firmware upgrades. If Yes and the firmware upgrade attempt is made, the device denies the upgrade and displays an error message that the lock is set. On each firmware upgrade, this setting goes back to the default.	No	Yes	Yes	-	Administrator
Factory Service Mode	When enabled (checkbox selected), the device can go into factory service mode. To enable, Supervisor authentication is necessary.	Disabled	Enabled	Disabled	-	Supervisor (Administrator when Supervisor is disabled)
Restore to Defaults	Sets the device to factory defaults	No	Yes	No	-	Administrator

SETTING NAME	DESCRIPTION	MIN	MAX	DEFAULT	UNITS	MINIMUM PERMISSION
Supervisor role	When enabled (checkbox selected), the Supervisor role is active. To enable, Administrator authentication is necessary. When disabled, the Supervisor role is inactive. To disable, Supervisor authentication is necessary.	Disabled	Enabled	Enabled	-	Administrator to enable and Supervisor to disable
RADIUS user names	Ensure that RADIUS user names are not the same as local/device role names	See RADIUS server documents	See RADIUS server documents		-	Administrator
Password	Local/device roles except for Observer are password-protected. All RADIUS users are password-protected.	See the *Password Requirements* section	See the following password section for requirements	Change Me1#	Text	The specified role and Administrator, except for Supervisor, where it is only itself

Security Alarm Settings

SETTING NAME	DESCRIPTION / DETAILS	MIN	MAX	DEFAULT	UNITS	MINIMUM PERMISSIONS
Failed Authentications	A threshold number indicating when an alarm is set off to indicate too many failed authentication attempts	0 (disabled)	99	3	-	Administrator
Firmware lock	A Boolean value indicating if the device can receive a firmware upgrade. If Yes and a firmware upgrade attempt is made, the device alarm activates. If No the device alarm does not activate. On each firmware upgrade this setting goes back to the default.	No	Yes	Yes	-	Administrator
Settings lock	A Boolean value indicating if the device can accept any settings changes. If Yes and a settings change attempt is made, the device alarm activates. If No, the device alarm does not activate.	No	Yes	Yes	-	Supervisor (Administrator if Supervisor has been disabled)

CYBERSENTRY SETTINGS THROUGH THE FRONT PANEL

PATH: SETTINGS ⇨ PRODUCT SETUP ⇨ SECURITY

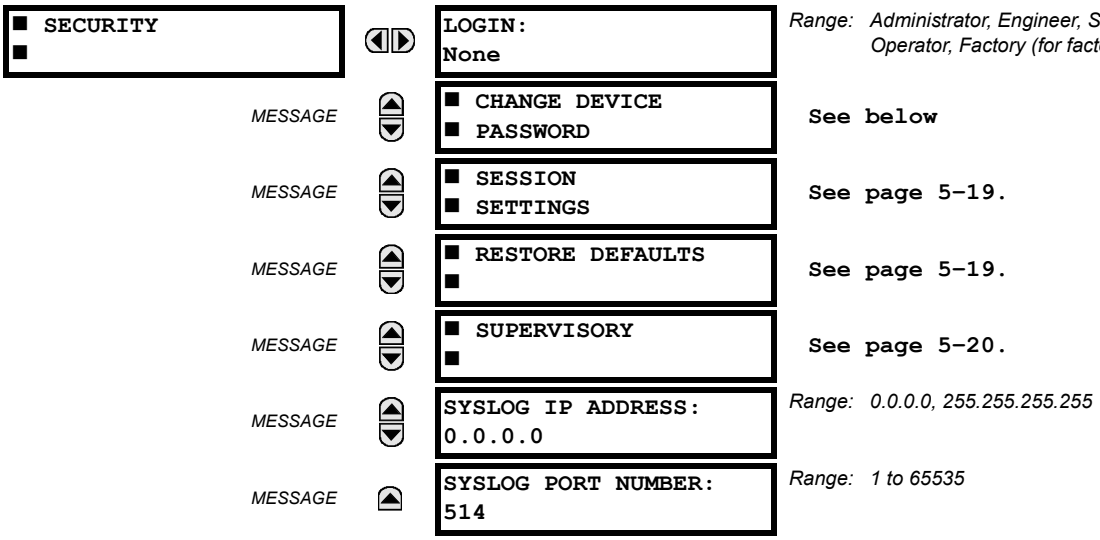

LOGIN: This setting is applicable for *Device Authentication* only. This setting allows a user to login with a specific role, see descriptions below. For the Supervisor role, the “Supervisor Role” setting should be enabled.

Whenever a new role is logged in, the user is prompted with a display to enter a password. Passwords must obey the requirements specified at the beginning of the chapter in the Password Requirements section.The UR device supports five roles. All roles have their corresponding passwords. The Observer is the only role that does not require a password. There are no time-outs for the Administrator, Engineer, Operator, and Supervisor when logged in using the front panel; log out manually or use the **Command > Security** commands in the software.

The roles are defined as follows:

- Administrator: Complete read and write access to all settings and commands. This role does not allow concurrent access. This role has an operand to indicate when it is logged on.
- Engineer: Complete read and write access to all settings and commands with the exception of configuring Security settings and Firmware upgrades. This role does not allow concurrent access.
- Operator: The Operator has read/write access to all settings under the command menu/section. This role does not exist offline.
- Supervisor: This is only an approving role. This role's authentication commits setting changes submitted by Administrator or Engineer. The Supervisor role authenticates to unlock the UR relay for setting changes and not approve changes after the fact. Only Supervisor can set the Settings and Firmware Lock in the Security Settings. This role also has the ability to forcefully logoff any other role and clear the security event log. This role can also be disabled, but only through a Supervisor authentication. When this role is disabled its permissions are assigned to the Administrator role.
- Observer: This role has read only access to all UR settings. This role allows concurrent access but it has no download access to any files on the device. Observer is the default role if no authentication has been done to the device. This role displays as "None" on the front panel.

NOTE

The Factory service role is not available and is intended for factory use only.

Device Password

PATH: SETTINGS ⇨ PRODUCT SETUP ⇨ SECURITY ⇨⇩ CHANGE DEVICE PASSWORD

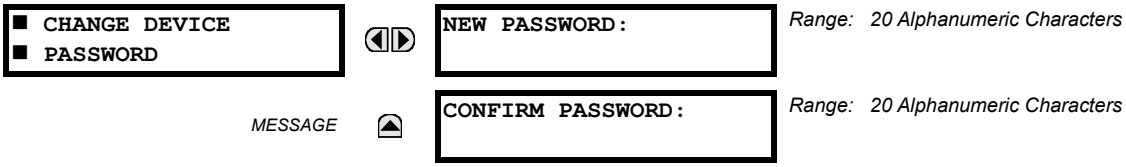

The menu displays on the front panel and EnerVista on a successful login of Administrator role.

Passwords are stored in text format. No encryption is applied.

NOTE

Notes:

- In Device Authentication mode, the Observer role does not have a password associated with it. In Server Authentication mode the Observer role requires a password.
- The default password is "ChangeMe1#".
- Once the passwords are set, the Administrator with Supervisor approval can change the role associated password.
- In CyberSentry, password encryption is not supported.

Session Settings

PATH: SETTINGS ⇨ PRODUCT SETUP ⇨ SECURITY ⇨⇩ SESSION SETTINGS

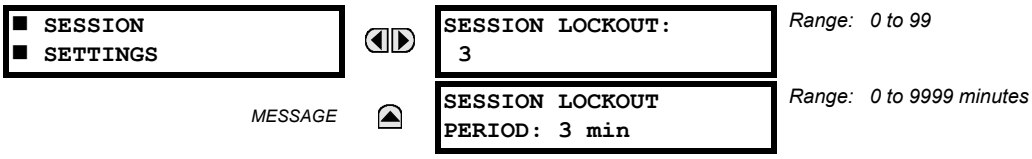

The following session settings are available.

- **SESSION LOCKOUT**: This setting specifies the number of failed authentications (the default is three and the maximum is 99) before the device blocks subsequent authentication attempts for the lockout period. A value of zero means lockout is disabled.
- **SESSION LOCKOUT PERIOD**: This setting specifies the period of time in minutes of a lockout period (the default is three and the maximum is 9999). A value of 0 means that there is no lockout period.

Restore Defaults

PATH: SETTINGS ⇨ PRODUCT SETUP ⇨ SECURITY ⇨⇩ RESTORE DEFAULTS

Range: Yes, No

- **LOAD FACTORY DEFAULTS**: This setting is used to reset all the settings, communication and security passwords. An Administrator role is used to change this setting and a Supervisor role (if not disabled) approves it.

Supervisory

PATH: SETTINGS ⇨ PRODUCT SETUP ⇨ SECURITY ⇨⇩SUPERVISORY

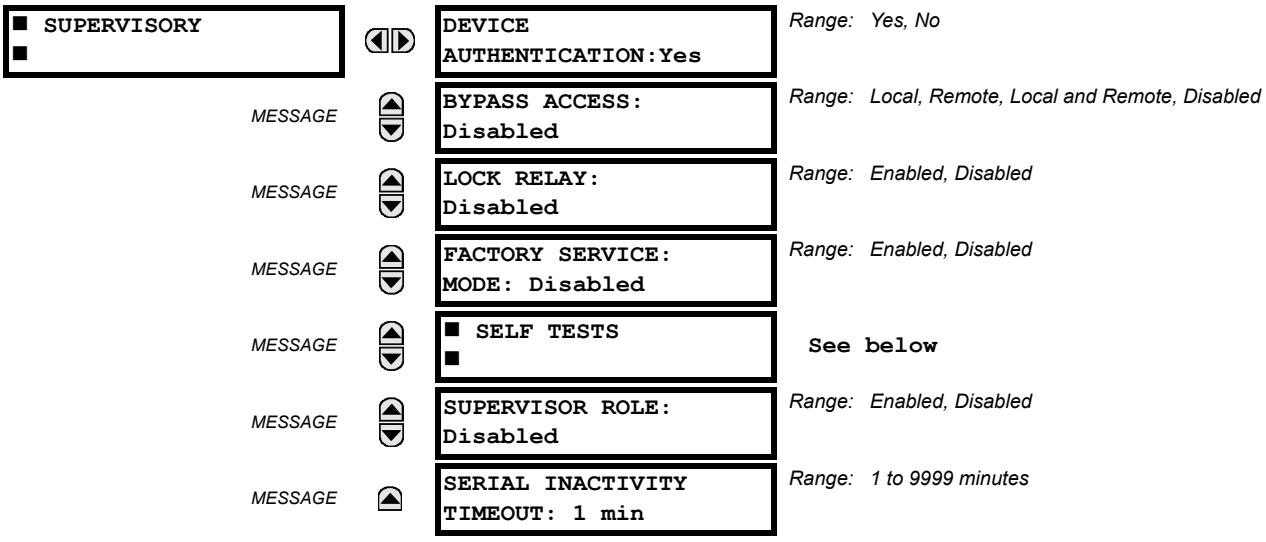

Range: Yes, No

Range: Local, Remote, Local and Remote, Disabled

Range: Enabled, Disabled

Range: Enabled, Disabled

See below

Range: Enabled, Disabled

Range: 1 to 9999 minutes

The Supervisory menu settings are available for Supervisor role only or if the Supervisor role is disabled then for the Administrator role only.

DEVICE AUTHENTICATION: This setting is enabled by default, meaning "Yes" is selected. When enabled, Device Authentication with roles is enabled. When this setting is disabled, the UR only authenticates to the AAA server (Radius). However, the Administrator and Supervisor (when enabled) remain active even after device authentication is disabled and their only permission is to re-enable device authentication. To re-enable device authentication, the Supervisor unlocks the device for setting changes, then the Administrator re-enables device authentication.

BYPASS ACCESS: The bypass security feature provides an easier access, with no authentication and encryption for those special situations when this is considered safe. Only the Supervisor, or the Administrator when the Supervisor role is disabled, can enable this feature.

MODE	FRONT PANEL OR SERIAL (RS232, RS485)	ETHERNET
Normal mode	Authentication — Role Based Access Control (RBAC) and passwords in clear	Authentication — RBAC and passwords encrypted SSH tunneling
Bypass access mode	No passwords for allowed RBAC levels	No passwords for allowed RBAC levels No SSH tunneling

The bypass options are as follows:

- Local — Bypasses authentication for push buttons, keypad, and RS232
- Remote — Bypasses authentication for RS485 and Ethernet
- Local and Remote — Bypasses authentication for push buttons, keypad, RS232, RS485, and Ethernet

When CyberSentry is enabled, Modbus communications over Ethernet is encrypted, which is not always tolerated by SCADA systems. The UR has the Bypass Access feature for such situations, which allows unencrypted Modbus over Ethernet. Setting it to "Remote" ensures no authentication is required over Ethernet and Modbus communication is unencrypted. Only a Supervisor or Administrator (if Supervisor role is disabled) can enable this feature. Note that other protocols (DNP, 101, 103, 104, EGD) are not encrypted, and they are good communications options for SCADA systems when CyberSentry is enabled.

LOCK RELAY: This setting uses a Boolean value (Enable/Disable) to indicate if the device accepts setting changes and whether the device can receive a firmware upgrade. This setting can be changed only by the Supervisor role, if it is enabled or by the Administrator if the Supervisor role is disabled. The Supervisor role enables this setting for the relay to start accepting setting changes or command changes or firmware upgrade. After all the setting changes are applied or commands executed, the Supervisor disables to lock setting changes.

Example: If this setting is "Yes" and an attempt is made to change settings or upgrade the firmware, the UR device denies the setting changes and denies upgrading the firmware. If this setting is "No", the UR device accepts setting changes and firmware upgrade.

This role is disabled by default.

FACTORY SERVICE MODE: When enabled (meaning "Yes" is selected) the device can go into factory service mode. For this setting to become enabled a Supervisor authentication is necessary. The default value is Disabled.

SUPERVISOR ROLE: When enabled (meaning "Yes" is selected) the Supervisor role is active. When "No" is selected this role is disabled. To disabled this setting a Supervisor authentication is necessary. If disabled, the Supervisor role is not allowed to log on. In this case the Administrator can change the settings under the Supervisory menu.

If enabled, Supervisor authentication is required to change the settings in the Supervisory menu. If the Supervisor disables his role after authentication, the Supervisor session remains valid until he switches to another role using MMI or until he ends the current Supervisor session if using communications.

This role is disabled by default.

SERIAL INACTIVITY TIMEOUT: The role logged via a serial port is auto logged off after the Serial Inactivity timer times out. A separate timer is maintained for RS232 and RS485 connections. Set this value to a high number, such as eight minutes, when using the rear RS485 terminals for settings write.

a) SELF TESTS

PATH: SETTINGS ⇨ PRODUCT SETUP ⇨ SECURITY ⇨⇩SUPERVISORY ⇨SELF TESTS

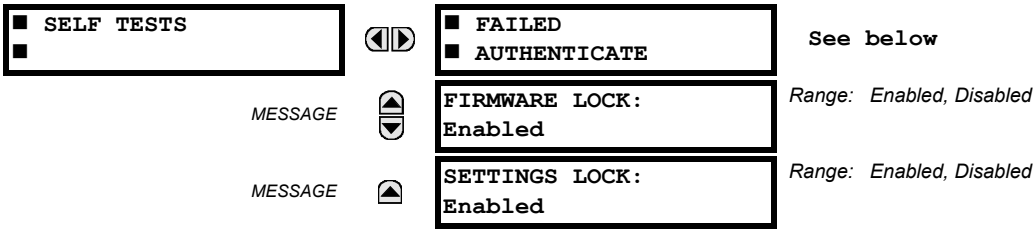

FAILED AUTHENTICATE: When Enabled, the number of failed authentications is compared with the Session Lockout threshold. When the Session Lockout threshold is exceeded, a minor alarm indication comes up. Operand is AUTHENTICATION FAIL.

FIRMWARE LOCK: When Enabled, any firmware upgrade attempt brings up a minor self-test alarm. Operand is UNAUTH FW ATTEMPT.

SETTINGS LOCK: When Enabled, an unauthorized write attempt to a setting for a given role activates a minor self test alarm. Operand is UNAUTH SETTING WRITE.

PATH: SETTINGS ⇨ PRODUCT SETUP ⇨ SECURITY ⇨⇩SUPERVISORY ⇨SELF TESTS ⇨FAILED AUTHENTICATE

CYBERSENTRY SETUP

When first using CyberSentry security, use the following procedure for set up.

1. Log in to the relay as Administrator by using the Value keys on the front panel to enter the default password "ChangeMe1#". Note that the "Lock relay" setting needs to be disabled in the **Security > Supervisory** menu. When this setting is disabled, configuration and firmware upgrade are possible. By default, this setting is disabled.
2. Enable the Supervisor role if you have a need for it.
3. Make any required changes in configuration, such as setting a valid IP address for communication over Ethernet.
4. Log out of the Administrator account by choosing None.

Next, device or server authentication can be chosen on the login screen, but the choice is available only in EnerVista. Use device authentication to log in using the five pre-configured roles (Administrator, Supervisor, Engineer, Operator, Observer). When using a serial connection, only device authentication is supported. When server authentication is required, characteristics for communication with a RADIUS server must be configured. This is possible only in the EnerVista software. The RADIUS server itself also must be configured. The appendix called RADIUS Server gives an example of how to setup a simple RADIUS server. Once both the RADIUS server and the parameters for connecting UR to the server have been configured, you can choose server authentication on the login screen of EnerVista.

NOTICE The use of CyberSentry for devices communicating through an Ethernet-to-RS485 gateway is not supported. Because these gateways do not support the secure protocols necessary to communicate with such devices, the connection cannot be established. Use the device as a non-CyberSentry device.

NOTICE Users logged in through the front panel are not timed out and cannot be forcefully logged out by a supervisor. Roles logged in through the front panel that do no allow multiple instances (Administrator, Supervisor, Engineer, Operator) must switch to None (equivalent to a logout) when they are done in order to log out.

NOTICE For all user roles except Observer, only one instance can be logged in at one time, for both login by front panel and software.

To configure server authentication:

1. In the EnerVista software, choose device authentication and log in as Administrator.
2. Configure the following RADIUS server parameters: IP address, authentication port, shared secret, and vendor ID.
3. On the RADIUS server, configure the user accounts. Do not use the five pre-defined roles as user names (Administrator, Supervisor, Engineer, Operator, Observer) in the RADIUS server. If you do, the UR relay automatically provides the authentication from the device.
4. In the EnerVista software, choose server authentication and log in using the user name and password configured on the RADIUS server for server authentication login.
5. After making any required changes, log out.

NOTICE When changing settings offline, ensure that only settings permitted by the role that performs the settings download are changed because only those changes are applied.

Pushbuttons (both user-control buttons and user-programmable buttons) located on the front panel can be pressed by an Administrator or Engineer role. This also applies to the reset button, which resets targets, where targets are errors displayed on the front panel or the Targets panel of the EnerVista software. The reset button has special behavior in that it allows these two roles to press it even when they are logged in through the RS232 port and not through the front panel.

To reset the security event log and self-test operands:

1. Log in as Supervisor (if the role is enabled) or Administrator (if the Supervisor role is disabled) and execute a clear security command under **Commands > Security > Clear Security**.

b) SYSLOG FORMAT

System logs are produced with the CyberSentry option. The format is as follows.

	Security log	Event Number	Date & Timestamp	Username	IP address	Role	Activity Value

Event Number — Event identification number (index)

Date & Timestamp — UTC date and time

Username — 255 chars maximum, but in the security log it is truncated to 20 characters

IP address — Device IP address

Role — 16 bit unsigned, of type format F617

ENUMERATION	ROLE
0	None
1	Administrator
2	Supervisor
3	Engineer
4	Operator
5	Factory

Activity Value — 16 bit unsigned

ENUMERATION	DESCRIPTION
1	Authentication Failed
2	User Lockout
3	FW Upgrade
4	FW Lock
5	Settings Lock
6	Settings Change. Because this can fill the entire event log, it is supported by the already existing Settings_Change.log file. This event is not required.
7	Clear Oscillography command
8	Clear Data Logger command (not applicable to all UR products)
9	Clear Demand Records command (not applicable to all UR products)
10	Clear Energy command (not applicable to all UR products)
11	Clear Unauthorized Access command
12	Clear Teleprotection Counters command (not applicable to all UR products)
13	Clear All Relay Records command
14	Role Log in
15	Role Log off

The following events are recorded in the syslog.

Table 5–3: SYSTEM EVENTS RECORDED

EVENT	SEVERITY	DESCRIPTION
FAILED_AUTH, ORIGIN, TIMESTAMP	Warning (4)	A failed authentication with origin information (username and IP:MAC address), a time stamp in UTC time when it occurred
AUTH_LOCKOUT, ORIGIN, TIMESTAMP	Error (3)	An authentication lockout has occurred because of too many failed authentication attempts
FIRMWARE_UPGD, ORIGIN, TIMESTAMP	Warning (4)	Indicates that a change of firmware has occurred
FIRMWARE_LOCK, ORIGIN, TIMESTAMP	Critical (1)	An attempt was made to change firmware while the firmware lock was enabled
SETTING_CHG, ORIGIN, TIMESTAMP	Notice (5)	Indicates setting change(s)
SETTING_LOCK, ORIGIN, TIMESTAMP	Critical (1)	An attempt was made to change settings while the settings lock was enabled
LOGIN, ORIGIN, TIMESTAMP	Warning (4)	Indicates when a certain role logged in
LOGOUT, ORIGIN, TIMESTAMP	Notice (5)	Indicates when a certain role logged out or timed out
CLEAR_OSCILLOGRAPHY	Notice (5)	Clear oscillography command was issued
CLEAR_DATA_LOGGER	Notice (5)	Clear data logger command was issued
CLEAR_DEMAND_RECS	Notice (5)	Clear demand records command was issued
CLEAR_ENERGY	Notice (5)	Clear energy command was issued
RESET_UNAUTH_ACCESS	Warning (4)	Reset Unauthorized access command was issued
CLEAR_TELEPROTECTION_CNT	Notice (5)	Clear teleprotection counters command was issued
CLEAR_ALL_RECS	Warning (4)	Clear all records command was issued

5.2.2 DISPLAY PROPERTIES

PATH: SETTINGS ⇨ PRODUCT SETUP ⇨⇩ DISPLAY PROPERTIES

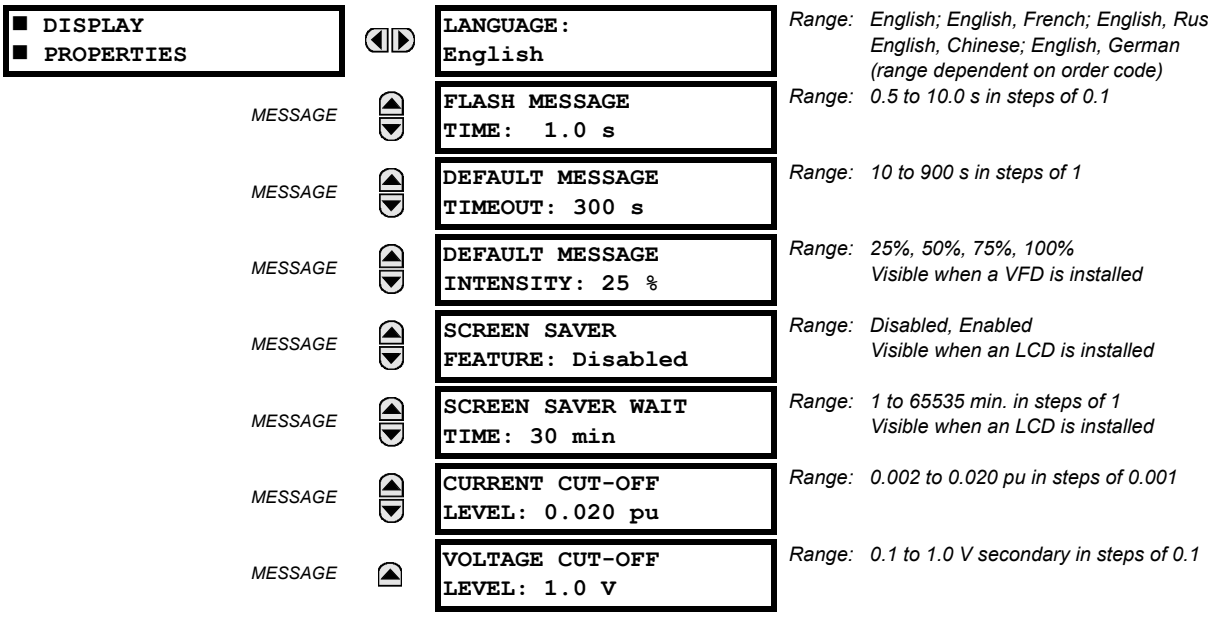

5

Some relay messaging characteristics can be modified to suit different situations using the display properties settings.

- **LANGUAGE**: This setting selects the language used to display settings, actual values, and targets. The setting displays when a language other than English was purchased, and the range depends on the order code of the relay. Restart the relay after changing this setting.
- **FLASH MESSAGE TIME**: Flash messages are status, warning, error, or information messages displayed for several seconds in response to certain key presses during setting programming. These messages override any normal messages. The duration of a flash message on the display can be changed to accommodate different reading rates.
- **DEFAULT MESSAGE TIMEOUT**: If the keypad is inactive for a period of time, the relay automatically reverts to a default message. The inactivity time is modified via this setting to ensure messages remain on the screen long enough during programming or reading of actual values.
- **DEFAULT MESSAGE INTENSITY**: To extend phosphor life in the vacuum fluorescent display, the brightness can be attenuated during default message display. During keypad interrogation, the display always operates at full brightness.
- **SCREEN SAVER FEATURE** and **SCREEN SAVER WAIT TIME**: These settings are only visible if the G60 has a liquid crystal display (LCD) and control its backlighting. When the **SCREEN SAVER FEATURE** is "Enabled", the LCD backlighting is turned off after the **DEFAULT MESSAGE TIMEOUT** followed by the **SCREEN SAVER WAIT TIME**, providing that no keys have been pressed and no target messages are active. When a keypress occurs or a target becomes active, the LCD backlighting is turned on.
- **CURRENT CUT-OFF LEVEL**: This setting modifies the current cut-off threshold. Very low currents (1 to 2% of the rated value) are very susceptible to noise. Some customers prefer very low currents to display as zero, while others prefer the current be displayed even when the value reflects noise rather than the actual signal. The G60 applies a cut-off value to the magnitudes and angles of the measured currents. If the magnitude is below the cut-off level, it is substituted with zero. This applies to phase and ground current phasors as well as true RMS values and symmetrical components. The cut-off operation applies to quantities used for metering, protection, and control, as well as those used by communications protocols. Note that the cut-off level for the sensitive ground input is 10 times lower that the **CURRENT CUT-OFF LEVEL** setting value. Raw current samples available via oscillography are not subject to cut-off.
- **VOLTAGE CUT-OFF LEVEL**: This setting modifies the voltage cut-off threshold. Very low secondary voltage measurements (at the fractional volt level) can be affected by noise. Some customers prefer these low voltages to be displayed as zero, while others prefer the voltage to be displayed even when the value reflects noise rather than the actual signal. The G60 applies a cut-off value to the magnitudes and angles of the measured voltages. If the magnitude is below the cut-off level, it is substituted with zero. This operation applies to phase and auxiliary voltages, and symmetrical

components. The cut-off operation applies to quantities used for metering, protection, and control, as well as those used by communications protocols. Raw samples of the voltages available via oscillography are not subject cut-off.

The **CURRENT CUT-OFF LEVEL** and the **VOLTAGE CUT-OFF LEVEL** are used to determine the metered power cut-off levels. The power cut-off level is calculated as shown below. For Delta connections:

$$\text{3-phase power cut-off} = \frac{\sqrt{3} \times \textbf{CURRENT CUT-OFF LEVEL} \times \textbf{VOLTAGE CUT-OFF LEVEL} \times \text{VT primary} \times \text{CT primary}}{\text{VT secondary}} \quad \textbf{(EQ 5.3)}$$

For Wye connections:

$$\text{3-phase power cut-off} = \frac{3 \times \textbf{CURRENT CUT-OFF LEVEL} \times \textbf{VOLTAGE CUT-OFF LEVEL} \times \text{VT primary} \times \text{CT primary}}{\text{VT secondary}} \quad \textbf{(EQ 5.4)}$$

$$\text{per-phase power cut-off} = \frac{\textbf{CURRENT CUT-OFF LEVEL} \times \textbf{VOLTAGE CUT-OFF LEVEL} \times \text{VT primary} \times \text{CT primary}}{\text{VT secondary}} \quad \textbf{(EQ 5.5)}$$

where VT primary = VT secondary × VT ratio and CT primary = CT secondary × CT ratio.

For example, given the following settings:

CURRENT CUT-OFF LEVEL: "0.02 pu"
VOLTAGE CUT-OFF LEVEL: "1.0 V"
PHASE CT PRIMARY: "100 A"
PHASE VT SECONDARY: "66.4 V"
PHASE VT RATIO: "208.00 : 1"
PHASE VT CONNECTION: "Delta".

We have:

CT primary = "100 A", and
VT primary = **PHASE VT SECONDARY** x **PHASE VT RATIO** = 66.4 V x 208 = 13811.2 V

The power cut-off is therefore:

power cut-off = (**CURRENT CUT-OFF LEVEL** × **VOLTAGE CUT-OFF LEVEL** × CT primary × VT primary)/VT secondary
= ($\sqrt{3}$ × 0.02 pu × 1.0 V × 100 A × 13811.2 V) / 66.4 V
= 720.5 watts

Any calculated power value below this cut-off will not be displayed. As well, the three-phase energy data will not accumulate if the total power from all three phases does not exceed the power cut-off.

NOTE

Lower the **VOLTAGE CUT-OFF LEVEL** and **CURRENT CUT-OFF LEVEL** with care as the relay accepts lower signals as valid measurements. Unless dictated otherwise by a specific application, the default settings of "0.02 pu" for **CURRENT CUT-OFF LEVEL** and "1.0 V" for **VOLTAGE CUT-OFF LEVEL** are recommended.

5.2.3 CLEAR RELAY RECORDS

PATH: SETTINGS ⇨ PRODUCT SETUP ⇨⇩ CLEAR RELAY RECORDS

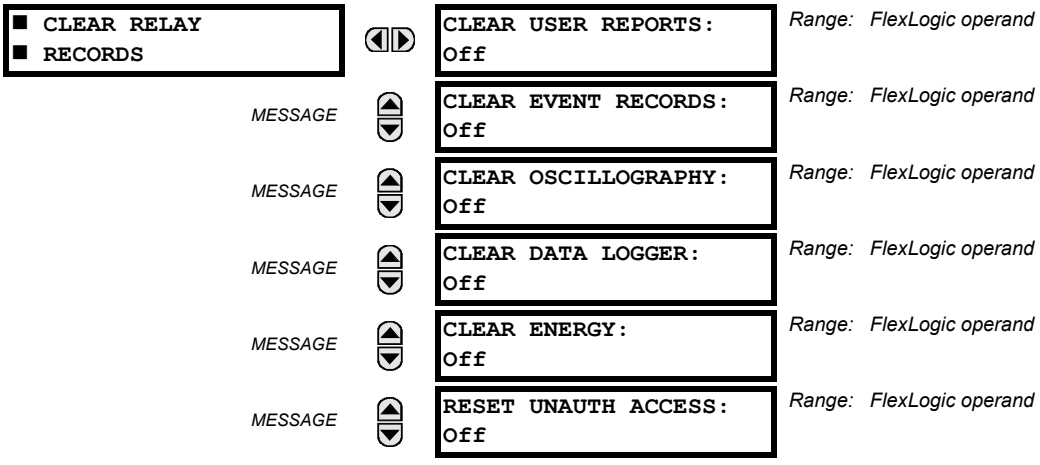

MESSAGE

```
CLEAR DIR I/O STATS:
Off
```

Range: FlexLogic operand.
Valid only for units with Direct I/O module.

Selected records can be cleared from user-programmable conditions with FlexLogic operands. Assigning user-programmable pushbuttons to clear specific records are typical applications for these commands. Since the G60 responds to rising edges of the configured FlexLogic operands, they must be asserted for at least 50 ms to take effect.

Clearing records with user-programmable operands is not protected by the command password. However, user-programmable pushbuttons are protected by the command password. Thus, if they are used to clear records, the user-programmable pushbuttons can provide extra security if required.

For example, to assign user-programmable pushbutton 1 to clear demand records, the following settings should be applied.

1. Assign the clear demand function to pushbutton 1 by making the following change in the **SETTINGS ⇨ PRODUCT SETUP ⇨⇩ CLEAR RELAY RECORDS** menu:

   CLEAR DEMAND: "PUSHBUTTON 1 ON"

2. Set the properties for user-programmable pushbutton 1 by making the following changes in the **SETTINGS ⇨ PRODUCT SETUP ⇨⇩ USER-PROGRAMMABLE PUSHBUTTONS ⇨ USER PUSHBUTTON 1** menu:

   PUSHBUTTON 1 FUNCTION: "Self-reset"
   PUSHBTN 1 DROP-OUT TIME: "0.20 s"

5.2.4 COMMUNICATIONS

a) MAIN MENU

PATH: SETTINGS ⇨ PRODUCT SETUP ⇨⇩ COMMUNICATIONS

```
■ COMMUNICATIONS
■
```

	■ SERIAL PORTS ■	See page 5–27.
MESSAGE	■ NETWORK ■	See page 5–30.
MESSAGE	■ IPv4 ROUTE TABLE ■	See page 5–32.
MESSAGE	■ MODBUS PROTOCOL ■	See page 5–35.
MESSAGE	PROTOCOL: DNP 3.0	*Range: DNP 3.0, IEC 60870-5-104, IEC 60870-5-103*
MESSAGE	■ DNP PROTOCOL ■	See page 5–37.
MESSAGE	■ DNP / IEC104 ■ POINT LISTS	See page 5–40.
MESSAGE	■ IEC 61850 PROTOCOL ■	See page 5–41.
MESSAGE	■ WEB SERVER ■ HTTP PROTOCOL	See page 5–55.
MESSAGE	■ TFTP PROTOCOL ■	See page 5–56.
MESSAGE	■ IEC 60870-5-104 ■ PROTOCOL	See page 5–56.
MESSAGE	■ EGD PROTOCOL ■	See page 5–57.

MESSAGE

```
■ IEC103
■ PROTOCOL
```

See page 5-59.

b) SERIAL PORTS

The G60 is equipped with up to two independent serial communication ports. The faceplate RS232 port is intended for local use and is fixed at 19200 baud and no parity. The rear COM2 port be used for either RS485 or RRTD communications.

PATH: SETTINGS ⇨ PRODUCT SETUP ⇨⇩ COMMUNICATIONS ⇨ SERIAL PORTS

```
■ SERIAL PORTS
■
```

		Range:
	COM2 USAGE: RS485	*RS485, RRTD only, GPM-F only, RRTD & GPM-F*
MESSAGE	RRTD SLAVE ADDRESS: 254	*1 to 254 in steps of 1. Shown only if the COM2 USAGE is "RRTD only" or "RRTD & GPM-F".*
MESSAGE	RS485 COM2 BAUD RATE: 19200	*300, 1200, 2400, 4800, 9600, 14400, 19200, 28800, 33600, 38400, 57600, 115200. Shown only if the COM2 USAGE is setting is "RS485".*
MESSAGE	RRTD BAUD RATE: 19200	*1200, 2400, 4800, 9600, 19200. Shown only if the COM2 USAGE is setting is "RRTD".*
MESSAGE	RS485 COM2 PARITY: None	*None, Odd, Even.*
MESSAGE	RS485 COM2 RESPONSE MIN TIME: 0 ms	*0 to 1000 ms in steps of 10*

It is important that the baud rate and parity settings agree with the settings used on the computer or other equipment that is connected to these ports.

The RS485 port can be connected to a computer running EnerVista UR Setup. This software can download and upload setting files, view measured parameters, and upgrade the relay firmware. A maximum of 32 relays can be daisy-chained and connected to a DCS, PLC, or PC using the RS485 port.

The baud rate for standard RS485 communications can be selected as 300, 1200, 2400, 4800, 9600, 14400, 19200, 28800, 33600, 38400, 57600, or 115200 bps. If COM2 is used for both a field ground module (GPM-F) and remote RTD unit (RRTD), then the **RS482 COM2 BAUD RATE** is fixed at 19200 bps.

NOTE

For the RS485 port, the minimum time before the port transmits after receiving data from a host can be set. This feature allows operation with hosts that hold the RS485 transmitter active for some time after each transmission.

If the **COM2 USAGE** setting is "RRTD only", then the COM2 port is used to monitor the RTDs on a remote RTD unit. The remote RTD unit uses the Modbus RTU protocol over RS485. The RRTD device must have a unique address from 1 to 254. The baud rate for RRTD communications can be selected as 300, 1200, 2400, 4800, 9600, 14400, or 19200 bps.

If the RS485 COM2 port is used for an RRTD, GPM-F, or RRTD and GPM-F, then there must not be any other devices connected in the daisy-chain for any other purpose. The port is strictly dedicated to RRTD or GPM-F usage when **COM2 USAGE** is selected as "RRTD only", "GPM-F only", or "RRTD & GPM-F".

The field ground module (GPM-F) has a fixed slave address of 1. Therefore, the RRTD SLAVE ADDRESS setting is applicable only to the RRTD unit and has a setting rage of 2 to 254 if the **COM2 USAGE** is set as "RRTD & GPM-F".

NOTE

Power must be cycled to the G60 for changes to the **COM2 USAGE** setting to take effect.

c) ETHERNET NETWORK TOPOLOGY

The G60 has three Ethernet ports. Each Ethernet port must belong to a different network or subnetwork. Configure the IP address and subnet to ensure that each port meets this requirement. Two subnets are different when the bitwise AND operation performed between their respective IP address and mask produces a different result. Communication becomes unpredictable when more than one port is configured to the same subnet.

Example 1

IP1/Mask1: 10.1.1.2/255.255.255.0 (where LAN 1 is 10.1.1.x/255.255.255.0)

IP2/Mask2: 10.2.1.2/255.255.255.0 (where LAN2 is 10.2.1.x/255.255.255.0)

IP3/Mask3: 10.3.1.2/255.255.255.0 (where LAN3 is 10.3.1.x/255.255.255.0)

Example 2

IP1/Mask1: 10.1.1.2/255.0.0.0 (where LAN1 is 10.x.x.x/255.0.0.0)

IP2/Mask2: 11.1.1.2/255.0.0.0 (where LAN2 is 11.x.x.x/255.0.0.0)

IP3/Mask3: 12.1.1.2/255.0.0.0 (where LAN3 is 12.x.x.x/255.0.0.0)

Example 3 — Incorrect

IP1/Mask1: 10.1.1.2/255.0.0.0

IP2/Mask2: 10.2.1.2/255.0.0.0

IP3/Mask3: 10.3.1.2/255.0.0.0

This example is incorrect because the mask of 255.0.0.0 used for the three IP addresses makes them belong to the same network of 10.x.x.x.

Single LAN, No Redundancy

The topology shown in the following figure allows communications to SCADA, local configuration/monitoring through EnerVista, and access to the public network shared on the same LAN. No redundancy is provided.

Figure 5–4: NETWORK CONFIGURATION FOR SINGLE LAN

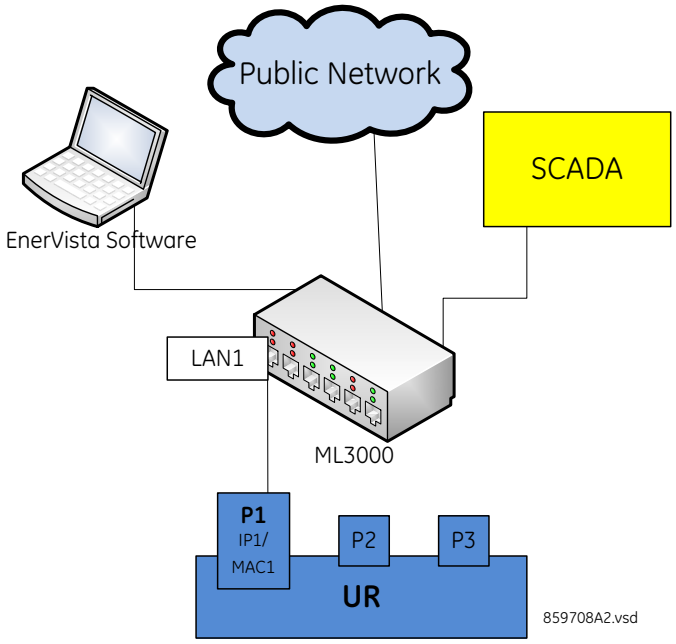

Multiple LANS, with Redundancy

The topology in the following figure provides local configuration/monitoring through EnerVista software and access to the public network shared on LAN1, to which port 1 (P1) is connected. There is no redundancy provided on LAN1. Communications to SCADA is provided through LAN2. P2 and P3 are connected to LAN2, where P2 is the primary channel and P3 is the redundant channel. In this configuration, P3 uses the IP and MAC address of P2.

Figure 5–5: MULTIPLE LANS, WITH REDUNDANCY

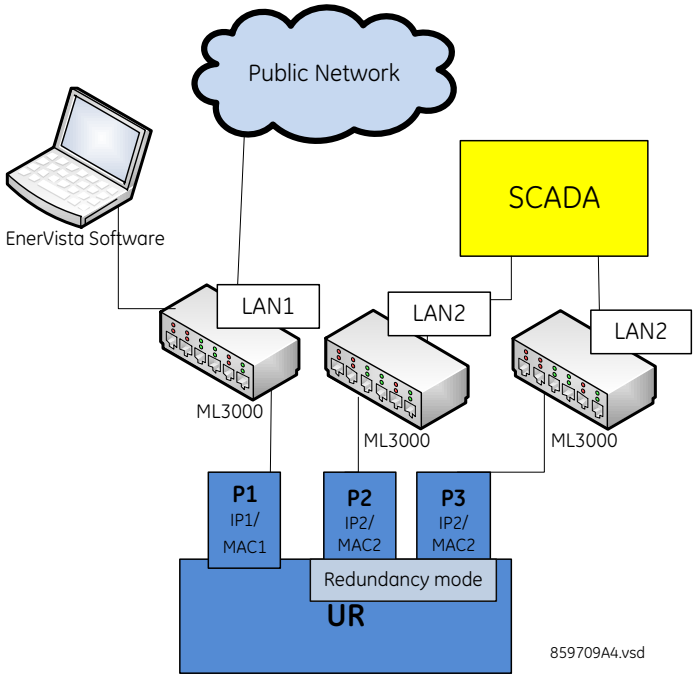

Multiple LANS, No Redundancy

The following topology provides local configuration/monitoring through EnerVista software on LAN1, to which port 1 (P1) is connected, access to the public network on LAN2, to which port 2 (P2) is connected and communications with SCADA on LAN3, to which port 3 (P3) is connected. There is no redundancy.

Figure 5–6: MULTIPLE LANS, NO REDUNDANCY

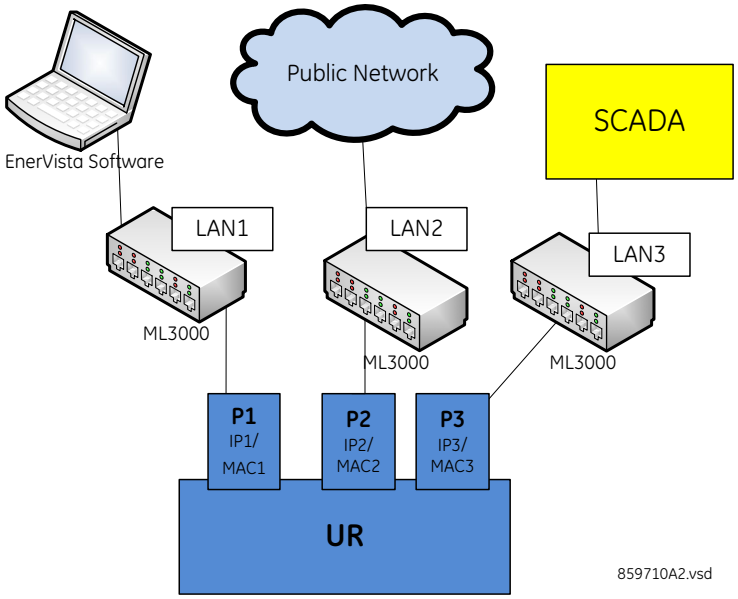

d) NETWORK

As outlined in the previous section, when using more than one Ethernet port, configure each to belong to a different network or subnet using the IP addresses and mask. Configure the network IP and subnet settings before configuring the routing settings.

Follow the IP and subnet mask rules outlined in the Configuring the G60 for Software Access section of the first chapter.

To obtain a list of all port numbers used, for example for audit purposes, contact GE technical support with substantiating information, such as the serial number and order code of your device.

PATH: SETTINGS ⇨ PRODUCT SETUP ⇨⇩ COMMUNICATIONS ⇨⇩ NETWORK ⇨ NETWORK PORT 1(3)

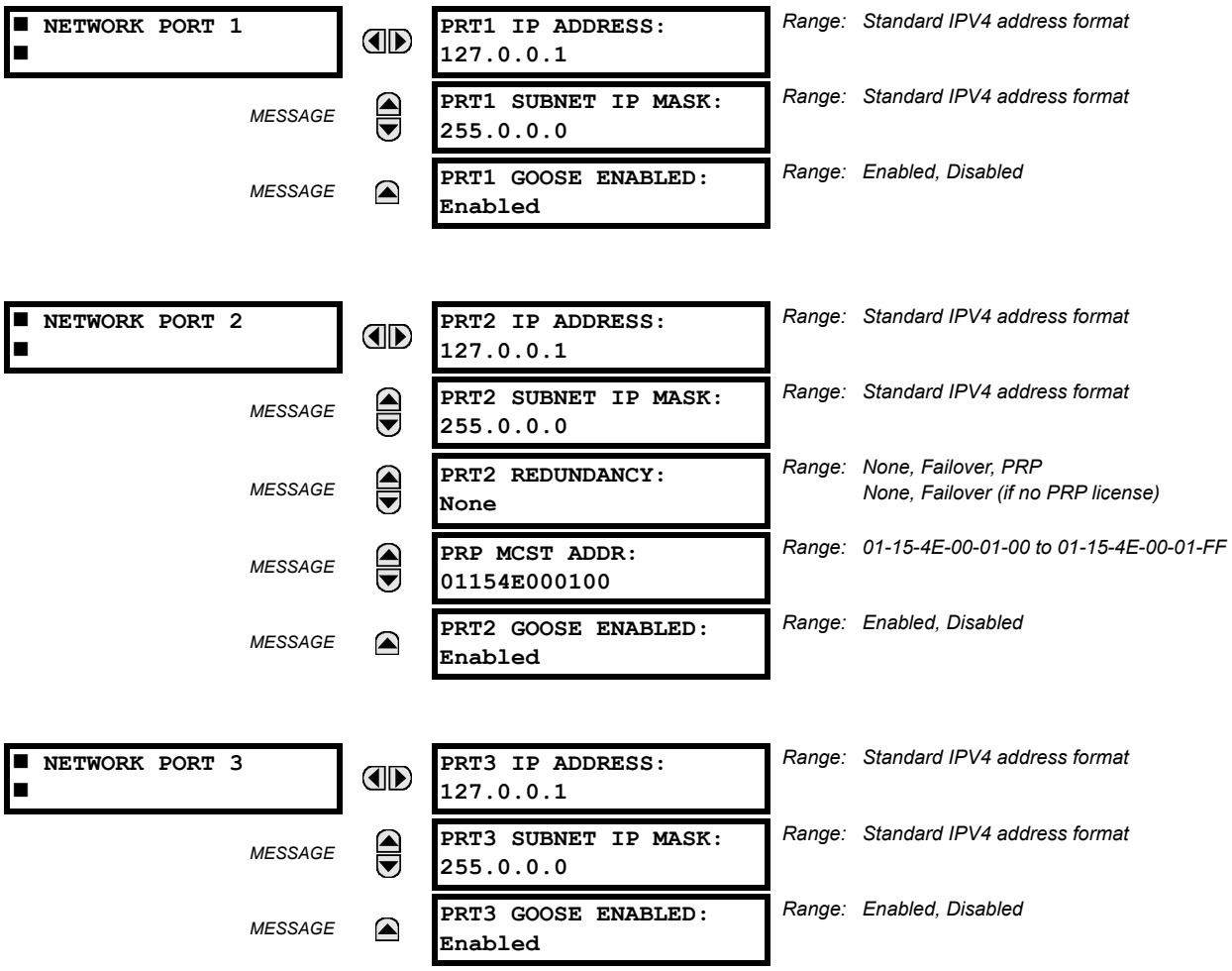

The IP addresses are used with the DNP, Modbus/TCP, IEC 61580, IEC 60870-5-104, TFTP, HTTP, and PRP protocols. PRP is explained in its own section later.

PRT1 (2 OR 3) IP ADDRESS: This setting sets the ports IPv4 address in standard IPV4 format. This setting is valid on port 3 if port 2 **REDUNDANCY** is set to None.

PRT1 (2 OR 3) SUBNET MASK: This setting sets the ports IPv4 subnet mask in standard IPV4 format. This setting is valid on port 3 if port 2 **REDUNDANCY** is set to None.

PRT1 (2 OR 3) GOOSE ENABLED: This setting enables/disables Goose on the respective port. By default Goose is enabled.

PRT2 REDUNDANCY determines if ports 2 and 3 operate in redundant or independent mode. If the software options in the order code include PRP, the available options are None, Failover, and PRP. If the software options in the order code do not include PRP, the available options are None and Failover. In non-redundant mode (**REDUNDANCY** set to None), ports 2 and 3 operate independently with their own MAC, IP, and mask addresses. If **REDUNDANCY** is set to Failover, the operation of ports 2 and 3 is as follows:

- Ports 2 and 3 use the port 2 MAC address, IP address, and mask

- The configuration fields for IP address and mask on port 3 are hidden
- Port 3 is in standby mode and does not actively communicate on the Ethernet network but monitors its link to the Multilink switch. If port 2 detects a problem with the link, communications is switched to Port 3. Port 3 is, in effect, acting as a redundant or backup link to the network for port 2. Once port 2 detects that the link between itself and the switch is good and that communication is healthy for five minutes, then switching back to port 2 is performed. The delay in switching back ensures that rebooted switching devices connected to the G60, which signal their ports as active prior to being completely functional, have time to completely initialize themselves and become active. Once port 2 is active again, port 3 returns to standby mode.

If **REDUNDANCY** is set to PRP, the operation of ports 2 and 3 is as follows:

- Ports 2 and 3 use the port 2 MAC address, IP address, and mask
- The configuration fields for IP address and mask on port 3 are overwritten with those from port 2. This is visible on the front panel but not displayed in the EnerVista software.
- Port 2 **MCST ADDRESS** field is visible
- The port 2 PTP function still uses only port 2 and the port 3 PTP function still uses only port 3. The relay still synchronizes to whichever port has the best master. When ports 2 and 3 see the same master, as is typically the case for PRP networks, the port with the better connectivity is used.

NOTE

The two ports must be connected to completely independent LANS with no single point of failure, such as common power supplies that feed switches on both LANS.

When **REDUNDANCY** is set to PRP or failover and the network path with resolved default gateway is broken, then the ARP table needs approximately five seconds to rebuild. The layer 2 protocols (GOOSE and PTP) are not affected. However, the TCP/IP or UDP protocols (MMS connections, DNP3.0, and so on) can require reconnection if their active connection does not ride through re-transmission frames.

For this setting change to take effect, restart the unit.

PRT2 PRP MCST ADDR: This setting allows the user to change the multicast address used by the PRP supervision frames. This setting is available if **REDUNDANCY** is set to PRP. All devices in the same PRP network need to have the same multicast address. Choose an address that does not conflict with another multicast protocol.

e) FAR-END FAULT INDICATION (FEFI)

Since 100BASE-FX does not support Auto-Negotiation, a Far-End Fault Indication (FEFI) feature is included in UR 7 that allows for detection of link failures.

The purpose of the Far-End Fault feature is to allow the stations on both ends of a pair of fibers to be informed when there is a problem with one of the fibers. Without the Far-End Fault feature, it is impossible for a fiber interface to detect a problem that affects only its transmit fiber.

When the Far-End Fault feature is supported, a loss of receive signal (link) causes the transmitter to generate a Far-End Fault pattern in order to inform the device at the far end of the fiber pair that a fault has occurred.

When the local receiver again detects a signal, the local transmitter automatically returns to normal operation.

If a Far-End Fault pattern is received by a fiber interface that supports the Far-End Fault feature and it is enabled, it reacts by dropping the link as if there were no signal at all.

If the receiving interface does not support the Far-End Fault feature or has it disabled, an incoming Far-End Fault pattern is ignored.

It is strongly recommended to have switches used at substation automation support the Far-End Fault feature, especially when UR 7 redundancy Failover is selected for redundancy purpose.

f) PARALLEL REDUNDANCY PROTOCOL (PRP)

The Parallel Redundancy Protocol (PRP) defines a redundancy protocol for high availability in substation automation networks. It applies to networks based on Ethernet technology (ISO/IEC 8802-3) and is based on the second edition (July 2012) of the IEC 62439-3, clause 4.

PRP is designed to provide seamless recovery in case of a single failure in the network, by using a combination of LAN duplication and frame duplication technique. Identical frames are sent on two completely independent networks that connect source and destination. Under normal circumstances both frames reach the destination and one of them is sent up the

OSI stack to the destination application, while the second one is discarded. If an error occurs in one of the networks and traffic is prevented from flowing on that path, connectivity is still provided through the other network to ensure continuous communication. Take care when designing the two LANs, so that no single point of failure (such as a common power supply) is encountered, as such scenarios can bring down both LANs simultaneously.

Figure 5–7: EXAMPLE OF PARALLEL REDUNDANT NETWORK

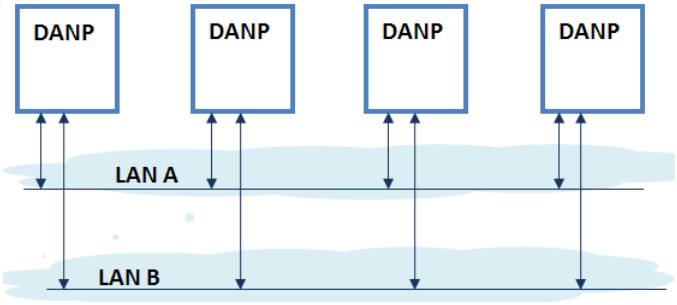

PRP uses specialized nodes called doubly attached nodes (DANPs) for handling the duplicated frames. DANPs devices have an additional module, called Link Redundancy Entity (LRE). LRE is responsible for duplicating frames and adding the specific PRP trailer when sending the frames out on the LAN, as well as making decisions on received frames as to which one is sent up the OSI stack to the application layer and which one is discarded. LRE is responsible for making PRP transparent to the higher layers of the stack. There is a second type of specialized device used in PRP networks, called RedBox, with the role of connecting Single Attached Nodes (SANs) to a redundant network.

UR relays implement only the DANP functionality. The RedBox functionality is not implemented.

The original standard IEC 62439-3 (2010) was amended to align PRP with the High-availability Seamless Redundancy (HSR) protocol. To achieve this, the original PRP was modified at the cost of losing compatibility with the PRP 2010 version. The revised standard IEC 62439-3 (2012) is commonly referred to as PRP-1, while the original standard is PRP-0. The UR relays support only PRP-1.

The relay implements PRP on two of its Ethernet ports, specifically Port 2 and 3 of the CPU module. Use the previous section (network port configuration) to configure PRP.

PRP is purchased as a separate option. If purchased (valid order code), PRP can be enabled in configuration through a setting available on the network configuration menu, REDUNDANCY, which already has the capability of enabling failover redundancy. The options on this setting must be changed to accommodate two types of redundancy: failover and PRP. When REDUNDANCY is set to either failover or PRP, the ports dedicated for PRP (Port 2 and 3) operate in redundant mode. In this mode, Port 3 uses the Mac, IP address, and mask of Port 2.

g) ROUTING

PATH: SETTINGS ⇨ PRODUCT SETUP ⇨⇩ COMMUNICATIONS ⇨⇩ IPv4 ROUTE TABLE

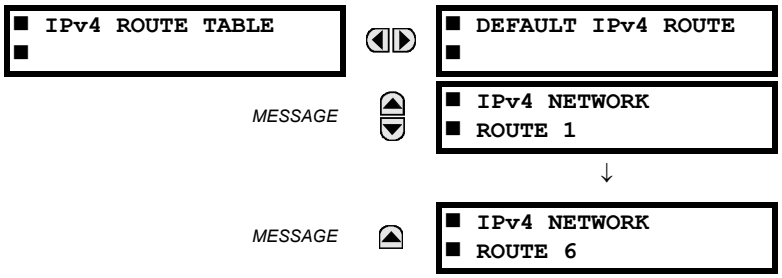

A default route and a maximum number of six static routes can be configured.

The default route is used as the last choice when no other route towards a given destination is found.

Range: Standard IPV4 unicast address format

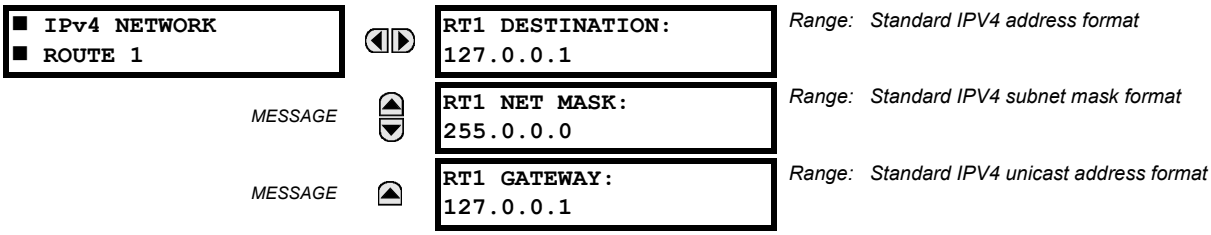

Configure the network IP and subnet settings before configuring the routing settings.

ADDING AND DELETING STATIC ROUTES

Host routes are not supported at present.

The routing table configuration is available on the serial port and front panel. This is a deliberate decision, to avoid loss of connectivity when remotely configuring the UR.

By default the value of the destination field is 127.0.0.1 for all static routes (1 to 6). This is equivalent to saying that the static routes are not configured. When the destination address is 127.0.0.1, the mask and gateway must be also kept on default values.

By default, the value of the route gateway address is 127.0.0.1. This means the default route is not configured.

To add a route:

1. Use any of the static network route entries numbered 1 to 6 to configure a static network route. Once a route destination is configured for any of the entries 1 to 6, that entry becomes a static route and it must meet all the rules listed in the next section, General Conditions to be Satisfied by Static Routes.
2. To configure the default route, enter a default gateway address. Once a default gateway address is configured, it must be validated against condition 2 of the General Conditions to be Satisfied by Static Routes.

To delete a route:

1. Replace the route destination with the default loopback address (127.0.0.1). When deleting a route, the mask and gateway must be also brought back to default values.
2. Delete the default route by replacing the default gateway with the default value 127.0.0.1.

GENERAL CONDITIONS TO BE SATISFIED BY STATIC ROUTES

The following rules are validated internally:

- The route mask has IP mask format. In binary this needs to be a set of contiguous bits of 1 from left to right, followed by one or more contiguous bits of 0.
- The route destination and mask must match. This can be verified by checking that
  RtDestination and RtMask = RtDestination
  Example of good configuration: RtDestination = 10.1.1.0; Rt Mask = 255.255.255.0
  Example of bad configuration: RtDestination = 10.1.1.1; Rt Mask = 255.255.255.0

The following rules must be observed when you configure static routes:

- The route destination must not be a connected network
- The route gateway must be on a connected network. This rule applies to the gateway address of the default route as well. This can be verified by checking that:
  (RtGwy & Prt1Mask) == (Prt1IP & Prt1Mask) || (RtGwy & Prt2Mask) == (Prt2IP & Prt2Mask) || (RtGwy & Prt3Mask) == (Prt3IP & Prt3Mask)

  where

  & is the bitwise-AND operator

  == is the equality operator

  || is the logical OR operator

ROUTING BEHAVIOR COMPARED TO PREVIOUS RELEASES

Prior to release 7.10, the UR did not have an explicit manner of configuring routes. The only available route was the default route configured as part of the network settings (port gateway IP address). This limited the ability to route to specific destinations, particularly if these destinations were reachable through a different interface than the one on which the default gateway was.

Starting with UR 7.10, up to six static network routes can be configured in addition to a default route. The default route configuration was also moved from the network settings into the routing section.

The figure shows an example of topology that benefits from the addition of static routes.

Figure 5–8: USING STATIC ROUTES

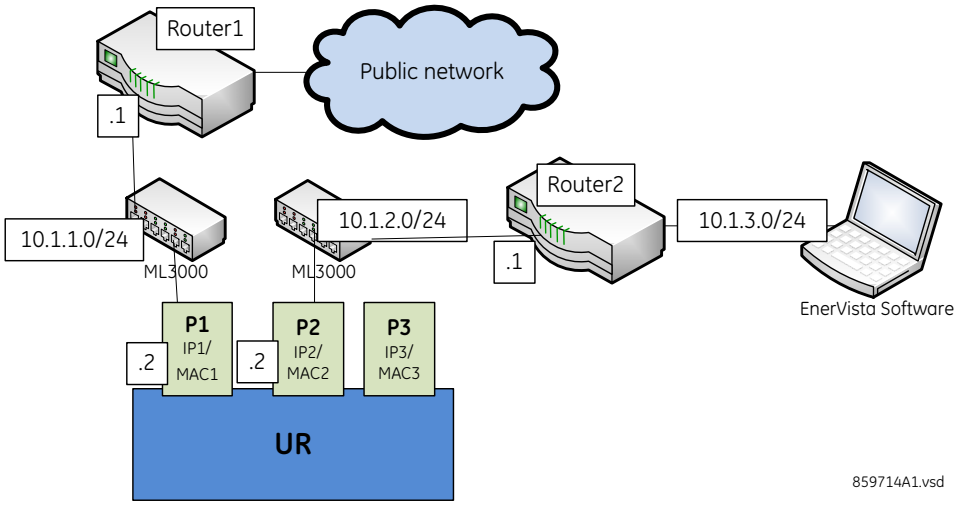

In the figure, the UR connects through the following two Ethernet ports:

- Port 1 (IP address 10.1.1.2) connects the UR to LAN 10.1.1.0/24 and to the Internet through Router1. Router 1 has an interface on 10.1.1.0/24 and the IP address of this interface is 10.1.1.1.
- Port 2 (IP address 10.1.2.2) connects the UR to LAN 10.1.2.0/24 and to the EnerVista software through Router 2. Router 2 has an interface on 10.1.2.0/24 and the IP address of this interface is 10.1.2.1.

The configuration before release 7.10 was as follows:

- PRT1 IP ADDRESS = 10.1.1.2
  PRT1 SUBNET IP MASK = 255.255.255.0
  PRT1 GWY IP ADDRESS = 10.1.1.1
  PRT2 IP ADDRESS = 10.1.2.2
  PRT2 SUBNET IP MASK = 255.255.255.0

The behavior before release 7.10 was as follows. When sending packets to EnerVista, the UR noticed that the destination was not on a connected network and it tried to find a route to destination. Since the default route was the only route it knew, it used it. Yet EnerVista was on a private network, which was not reachable through Router 1. Hence a destination unreachable message was received from the router.

The configuration starting release 7.10 is as follows:

- PRT1 IP ADDRESS = 10.1.1.2
  PRT1 SUBNET IP MASK = 255.255.255.0
  PRT2 IP ADDRESS = 10.1.2.2
  PRT2 SUBNET IP MASK = 255.255.255.0
  IPV4 DEFAULT ROUTE: GATEWAY ADDRESS = 10.1.1.1
  STATIC NETWORK ROUTE 1: RT1 DESTINATION = 10.1.3.0/24; RT1 NET MASK = 255.255.255.0; and RT1 GATEWAY = 10.1.2.1

The behavior since release 7.10 is as follows. There is one added static network route to the destination 10.1.3.0/24, where a computer running EnerVista is located. This static route uses a different gateway (10.1.2.1) than the default route. This gateway is the address of Router 2, which has knowledge about 10.1.3.0 and is able to route packets coming from UR and destined to EnerVista.

SHOW ROUTES AND ARP TABLES

This feature is available on the Web interface, where the main menu contains an additional Communications menu and two submenus:

- Routing Table
- ARP Table

The tables outline the information displayed when the two submenus are selected.

Table 5–4: ROUTING TABLE INFORMATION

FIELD	DESCRIPTION
Destination	The IP address of the remote network to which this route points
Mask	The network mask for the destination
Gateway	The IP address of the next router to the remote network
Interface	Interface through which the specified network can be reached

Table 5–5: IP ARP INFORMATION

FIELD	DESCRIPTION
IP Address	The network address that corresponds to Hardware Address
Age (min)	Age, in minutes, of the cache entry. A hyphen (-) means the address is local.
Hardware Address	LAN hardware address, a MAC address that corresponds to network address
Type	Dynamic or Static
Interface	Interface to which this address mapping has been assigned

h) MODBUS PROTOCOL

PATH: SETTINGS ⇨ PRODUCT SETUP ⇨⇩ COMMUNICATIONS ⇨⇩ MODBUS PROTOCOL

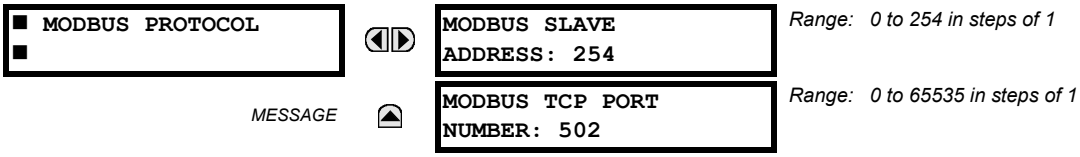

The serial communication ports utilize the Modbus protocol, unless the port is configured for DNP or IEC 60870-5-103 operation. This allows the EnerVista UR Setup software to be used on the port. The UR operates as a Modbus slave device only.

When using Modbus protocol on the RS232 port, the G60 responds regardless of the **MODBUS SLAVE ADDRESS** programmed. For the RS485 port, each device on the serial bus must have a unique slave address from 1 to 254. Address 0 and addresses from 248 and up are reserved by the Modbus protocol specification, and so their use here is not recommended. Address 0 is the broadcast address that all Modbus slave devices listen to. When **MODBUS SLAVE ADDRESS** is set to 0, the UR accepts broadcast messages, but in compliance with protocol specifications for broadcast messages, never replies. Addresses do not have to be sequential, but no two devices can have the same address or conflicts resulting in errors occur. Generally, each device added to the link should use the next higher address starting at 1. When using Modbus TCP/IP, the client must use the programmed **MODBUS SLAVE ADDRESS** value in the Unit Identifier field. See Appendix B for more information on the Modbus protocol.

Modbus over TCP/IP can also be used on any of the Ethernet ports. The listening TCP port 502 is reserved for Modbus communications, and only in exceptional cases when **MODBUS TCP PORT NUMBER** is set to any other port. The **MODBUS TCP PORT NUMBER** setting sets the TCP port used by Modbus on Ethernet. A **MODBUS TCP PORT NUMBER** of 0 disables Modbus over TCP/IP, meaning closes the Modbus TCP port. When it is set to 0, use the front panel or serial port to communicate with the relay.

NOTE

When a 0 value is involved in a change, the changes to the **MODBUS TCP PORT NUMBER** setting take effect when the G60 is restarted.

Do not set more than one protocol to the same TCP/UDP port number, as this results in unreliable operation of those protocols.

i) PROTOCOL

The Protocol menu setting allows selection of one of the following protocols: DNP 3.0, IEC60870-104, or IEC60870-103. For any change to take effect, restart the unit.

The table shows which of DNP 3.0, IEC 60870-5-104, IEC 60870-5-103, and IEC 61850 protocols are operational on the RS232, RS485, and Ethernet ports. It shows all possible combinations of the **PROTOCOL** and **DNP CHANNEL 1(2) PORT** settings.

Table 5–6: PORT AND PROTOCOL COMBINATIONS

PROTOCOL SETTING	DNP CHANNEL 1(2) PORT SETTINGS	RS232	RS485	ETHERNET
DNP	Channel 1: Eth TCP Channel 2: Eth TCP	Modbus	Modbus	DNP, Modbus, IEC 61850
	Channel 1: Eth TCP Channel 2: none	Modbus	Modbus	DNP, Modbus, IEC 61850
	Channel 1: none Channel 2: Eth TCP	Modbus	Modbus	DNP, Modbus, IEC 61850
	Channel 1: Eth UDP Channel 2: none	Modbus	Modbus	DNP, Modbus, IEC 61850
	Channel 1: Eth TCP Channel 2: RS485	Modbus	DNP	DNP, Modbus, IEC 61850
	Channel 1: Eth TCP Channel 2: RS232	DNP	Modbus	DNP, Modbus, IEC 61850
	Channel 1: Eth UDP Channel 2: RS485	Modbus	DNP	DNP, Modbus, IEC 61850
	Channel 1: Eth UDP Channel 2: RS232	DNP	Modbus	DNP, Modbus, IEC 61850
	Channel 1: RS485 Channel 2: Eth TCP	Modbus	DNP	DNP, Modbus, IEC 61850
	Channel 1: RS232 Channel 2: Eth TCP	DNP	Modbus	DNP, Modbus, IEC 61850
	Channel 1: RS485 Channel 2: RS232	DNP	DNP	Modbus, IEC 61850
	Channel 1: RS232 Channel 2: RS485	DNP	DNP	Modbus, IEC 61850
	Channel 1: RS485 Channel 2: none	Modbus	DNP	Modbus, IEC 61850
IEC 104		Modbus	Modbus	IEC 104, Modbus, IEC 61850
IEC 103		Modbus	IEC 103	Modbus, IEC 61850

j) DNP PROTOCOL

PATH: SETTINGS ⇨ PRODUCT SETUP ⇨⇩ COMMUNICATIONS ⇨⇩ DNP PROTOCOL

■ DNP PROTOCOL ■	◀▶	■ DNP CHANNELS ■
		Range: see sub-menu below
	MESSAGE ▲▼	DNP ADDRESS: 1
		Range: 0 to 65519 in steps of 1
	MESSAGE ▲▼	■ DNP NETWORK ■ CLIENT ADDRESSES
		Range: see sub-menu below
	MESSAGE ▲▼	DNP TCP/UDP PORT NUMBER: 20000
		Range: 0 to 65535 in steps of 1
	MESSAGE ▲▼	DNP UNSOL RESPONSE FUNCTION: Disabled
		Range: Enabled, Disabled
	MESSAGE ▲▼	DNP UNSOL RESPONSE TIMEOUT: 5 s
		Range: 0 to 60 s in steps of 1
	MESSAGE ▲▼	DNP UNSOL RESPONSE MAX RETRIES: 10
		Range: 1 to 255 in steps of 1
	MESSAGE ▲▼	DNP UNSOL RESPONSE DEST ADDRESS: 1
		Range: 0 to 65519 in steps of 1
	MESSAGE ▲▼	DNP CURRENT SCALE FACTOR: 1
		Range: 0.001, 0.01. 0.1, 1, 10, 100, 1000, 10000, 100000
	MESSAGE ▲▼	DNP VOLTAGE SCALE FACTOR: 1
		Range: 0.001, 0.01. 0.1, 1, 10, 100, 1000, 10000, 100000
	MESSAGE ▲▼	DNP POWER SCALE FACTOR: 1
		Range: 0.001, 0.01. 0.1, 1, 10, 100, 1000, 10000, 100000
	MESSAGE ▲▼	DNP ENERGY SCALE FACTOR: 1
		Range: 0.001, 0.01. 0.1, 1, 10, 100, 1000, 10000, 100000
	MESSAGE ▲▼	DNP PF SCALE FACTOR: 1
		Range: 0.001, 0.01. 0.1, 1, 10, 100, 1000, 10000, 100000
	MESSAGE ▲▼	DNP OTHER SCALE FACTOR: 1
		Range: 0.001, 0.01. 0.1, 1, 10, 100, 1000, 10000, 100000
	MESSAGE ▲▼	DNP CURRENT DEFAULT DEADBAND: 30000
		Range: 0 to 100000000 in steps of 1
	MESSAGE ▲▼	DNP VOLTAGE DEFAULT DEADBAND: 30000
		Range: 0 to 100000000 in steps of 1
	MESSAGE ▲▼	DNP POWER DEFAULT DEADBAND: 30000
		Range: 0 to 100000000 in steps of 1
	MESSAGE ▲▼	DNP ENERGY DEFAULT DEADBAND: 30000
		Range: 0 to 100000000 in steps of 1
	MESSAGE ▲▼	DNP PF DEFAULT DEADBAND: 30000
		Range: 0 to 100000000 in steps of 1
	MESSAGE ▲▼	DNP OTHER DEFAULT DEADBAND: 30000
		Range: 0 to 100000000 in steps of 1
	MESSAGE ▲▼	DNP TIME SYNC IIN PERIOD: 1440 min
		Range: 1 to 10080 min. in steps of 1

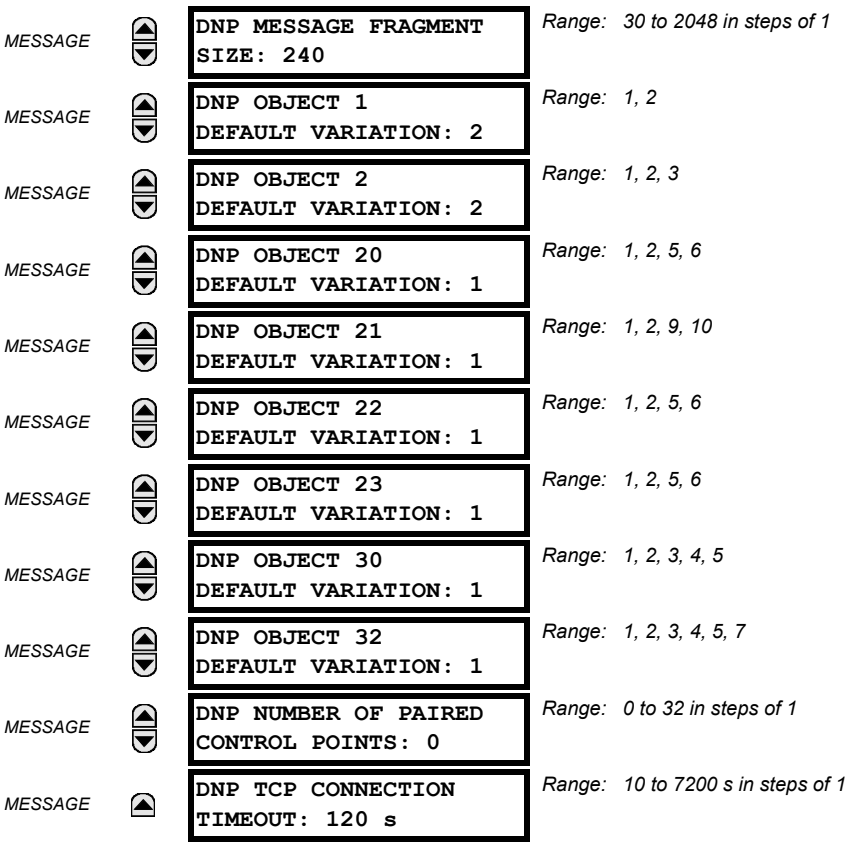

The G60 supports the Distributed Network Protocol (DNP) version 3.0. DNP is enabled when the **SETTINGS ⇨ PRODUCT SETUP ⇨⇩ COMMUNICATIONS ⇨ PROTOCOL** setting is set to DNP 3.0. The G60 can be used as a DNP slave device connected to multiple DNP masters (usually an RTU or a SCADA master station). Since the G60 maintains two sets of DNP data change buffers and connection information, two DNP masters can actively communicate with the G60 at one time.

NOTE For any change to DNP settings, restart the relay.

The DNP Channels sub-menu is shown below.

PATH: SETTINGS ⇨ PRODUCT SETUP ⇨⇩ COMMUNICATIONS ⇨⇩ DNP PROTOCOL ⇨ DNP CHANNELS

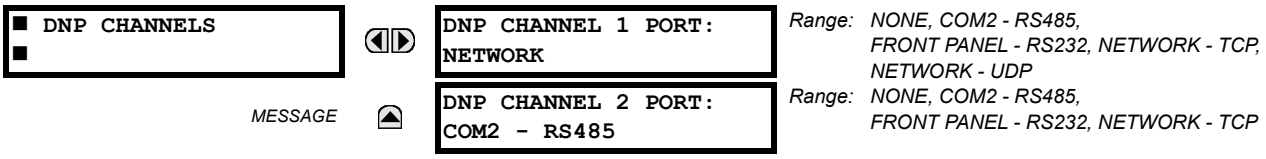

The **DNP CHANNEL 1 PORT** and **DNP CHANNEL 2 PORT** settings select the communications port assigned to the DNP protocol for each channel. Once DNP is assigned to a serial port, DNP is the only protocol running on that port; Modbus or IEC 60870-5-103 are disabled. If DNP is assigned to RS485, the protocol must be set to DNP on the serial port configuration as well, for the change to take effect. When the **DNP CHANNEL 1(2) PORT** setting is set to "Network - TCP," the channel 1(2) DNP protocol can be used over TCP/IP on the Ethernet ports. When the **DNP CHANNEL 1 PORT** setting is set to "Network - UDP," the channel 1 DNP protocol can be used over UDP/IP on the Ethernet ports. See the DNP appendix for information on the DNP protocol.

NOTE Do not set more than one protocol to the same TCP/UDP port number, as this results in unreliable operation of those protocols.

The **DNP ADDRESS** setting is the DNP slave address. This number identifies the G60 on a DNP communications link. Each DNP slave should be assigned a unique address.

The G60 can specify a maximum of five clients for its DNP connections. These are IP addresses for the controllers to which the G60 can connect. The settings in this sub-menu are shown below.

PATH: SETTINGS ⇨ PRODUCT SETUP ⇨⇩ COMMUNICATIONS ⇨⇩ DNP PROTOCOL ⇨ DNP NETWORK CLIENT ADDRESSES

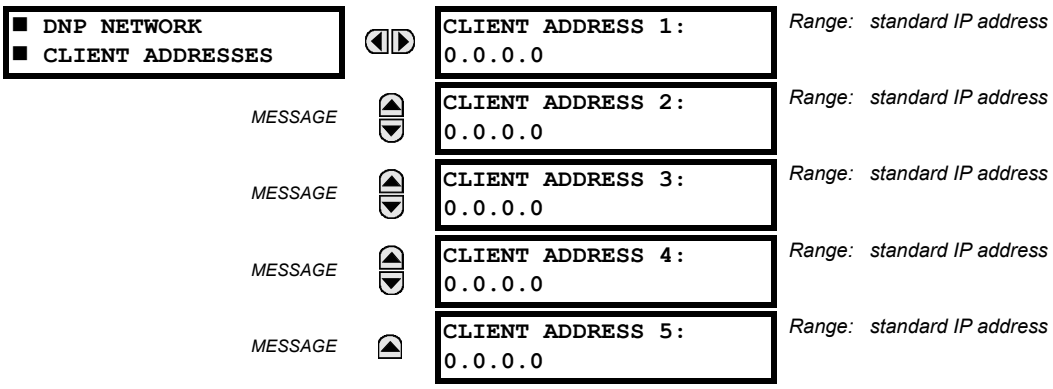

The **DNP TCP/UDP PORT NUMBER** is for normal DNP operation. To close the port, set the port number to 0.

The **DNP UNSOL RESPONSE FUNCTION** should be "Disabled" for RS485 applications since there is no collision avoidance mechanism. The **DNP UNSOL RESPONSE TIMEOUT** sets the time the G60 waits for a DNP master to confirm an unsolicited response. The **DNP UNSOL RESPONSE MAX RETRIES** setting determines the number of times the G60 retransmits an unsolicited response without receiving confirmation from the master; a value of "255" allows infinite re-tries. The **DNP UNSOL RESPONSE DEST ADDRESS** is the DNP address to which all unsolicited responses are sent. The IP address to which solicited responses are sent is determined by the G60 from the current TCP connection or the most recent UDP message.

The DNP scale factor settings are numbers used to scale analog input point values. These settings group the G60 analog input data into the following types: current, voltage, power, energy, power factor, and other. Each setting represents the scale factor for all analog input points of that type. For example, if the **DNP VOLTAGE SCALE FACTOR** setting is set to "1000", all DNP analog input points that are voltages will be returned with values 1000 times smaller (for example, a value of 72000 V on the G60 will be returned as 72). These settings are useful when analog input values must be adjusted to fit within certain ranges in DNP masters. Note that a scale factor of 0.1 is equivalent to a multiplier of 10 (that is, the value will be 10 times larger).

The **DNP DEFAULT DEADBAND** settings determine when to trigger unsolicited responses containing analog input data. These settings group the G60 analog input data into the following types: current, voltage, power, energy, power factor, and other. Each setting represents the default deadband value for all analog input points of that type. For example, to trigger unsolicited responses from the G60 when any current values change by 15 A, the **DNP CURRENT DEFAULT DEADBAND** setting should be set to "15". Note that these settings are the deadband default values. DNP object 34 points can be used to change deadband values, from the default, for each individual DNP analog input point.

The **DNP TIME SYNC IIN PERIOD** setting determines how often the Need Time Internal Indication (IIN) bit is set by the G60. Changing this time allows the DNP master to send time synchronization commands more or less often, as required.

The **DNP MESSAGE FRAGMENT SIZE** setting determines the size, in bytes, at which message fragmentation occurs. Large fragment sizes allow for more efficient throughput; smaller fragment sizes cause more application layer confirmations to be necessary which can provide for more robust data transfer over noisy communication channels.

NOTE

Check the "DNP Points Lists" G60 web page to view the analog inputs and/or binary inputs points lists. This page can be viewed with a web browser by entering the IP address of the UR Ethernet port employed to access the G60 "Main Menu", then by selecting the "Device Information Menu" > "DNP Points Lists" menu item.

The **DNP OBJECT 1 DEFAULT VARIATION** to **DNP OBJECT 32 DEFAULT VARIATION** settings allow the user to select the DNP default variation number for object types 1, 2, 20, 21, 22, 23, 30, and 32. The default variation refers to the variation response when variation 0 is requested and/or in class 0, 1, 2, or 3 scans. See the DNP Implementation section in the DNP appendix.

The DNP binary outputs typically map one-to-one to IED data points. That is, each DNP binary output controls a single physical or virtual control point in an IED. In the G60 relay, DNP binary outputs are mapped to virtual inputs. However, some legacy DNP implementations use a mapping of one DNP binary output to two physical or virtual control points to support the concept of trip/close (for circuit breakers) or raise/lower (for tap changers) using a single control point. That is, the DNP master can operate a single point for both trip and close, or raise and lower, operations. The G60 can be configured to support paired control points, with each paired control point operating two virtual inputs. The **DNP NUMBER OF PAIRED CONTROL POINTS** setting allows configuration of from 0 to 32 binary output paired controls. Points not configured as paired operate on a one-to-one basis.

The **DNP TCP CONNECTION TIMEOUT** setting specifies a time delay for the detection of dead network TCP connections. If there is no data traffic on a DNP TCP connection for greater than the time specified by this setting, the connection will be aborted by the G60. This frees up the connection to be re-used by a client.

NOTE For any change to DNP settings, restart the relay.

k) DNP / IEC 60870-5-104 POINT LISTS

PATH: SETTINGS ⇨ PRODUCT SETUP ⇨⇩ COMMUNICATIONS ⇨⇩ DNP / IEC104 POINT LISTS

```
■ DNP / IEC104
■ POINT LISTS
```

⇔

```
■ BINARY INPUT / MSP
■ POINTS
```

Range: see sub-menu below

MESSAGE ⇧

```
■ ANALOG INPUT / MME
■ POINTS
```

Range: see sub-menu below

5

Up to 256 binary and up to 256 analog input points for the DNP protocol, or the MSP and MME points for IEC 60870-5-104 protocol, can be configured. The value for each point is user-programmable and can be configured by assigning FlexLogic operands for binary inputs / MSP points or FlexAnalog parameters for analog inputs / MME points.

The menu for the binary input points (DNP) or MSP points (IEC 60870-5-104) is shown below.

PATH: SETTINGS ⇨ PRODUCT SETUP ⇨⇩ COMMUNICATIONS ⇨⇩ DNP / IEC104 POINT LISTS ⇨ BINARY INPUT / MSP POINTS

```
■ BINARY INPUT / MSP
■ POINTS
```

⇔

```
Point:   0
Off
```

Range: FlexLogic operand

MESSAGE ⇕

```
Point:   1
Off
```

Range: FlexLogic operand

↓

MESSAGE ⇧

```
Point:   255
Off
```

Range: FlexLogic operand

Up to 256 binary input points can be configured for the DNP or IEC 60870-5-104 protocols. The points are configured by assigning an appropriate FlexLogic operand. See the Introduction to FlexLogic section in this chapter for the full range of assignable operands.

The menu for the analog input points (DNP) or MME points (IEC 60870-5-104) is shown below.

PATH: SETTINGS ⇨ PRODUCT SETUP ⇨⇩ COMMUNICATIONS ⇨⇩ DNP / IEC104 POINT LISTS ⇨⇩ ANALOG INPUT / MME POINTS

```
■ ANALOG INPUT / MME
■ POINTS
```

⇔

```
Point:   0
Off
```

Range: any FlexAnalog parameter

MESSAGE ⇕

```
Point:   1
Off
```

Range: any FlexAnalog parameter

↓

MESSAGE ⇧

```
Point:   255
Off
```

Range: any FlexAnalog parameter

Up to 256 analog input points can be configured for the DNP or IEC 60870-5-104 protocols. The analog point list is configured by assigning an appropriate FlexAnalog parameter to each point. Refer to Appendix A: FlexAnalog Parameters for the full range of assignable parameters.

NOTE

The DNP / IEC 60870-5-104 point lists always begin with point 0 and end at the first "Off" value. Since DNP / IEC 60870-5-104 point lists must be in one continuous block, any points assigned after the first "Off" point are ignored.

Changes to the DNP / IEC 60870-5-104 point lists take effect when the G60 is restarted.

l) IEC 61850 PROTOCOL

PATH: SETTINGS ⇨ PRODUCT SETUP ⇨⇩ COMMUNICATIONS ⇨⇩ IEC 61850 PROTOCOL

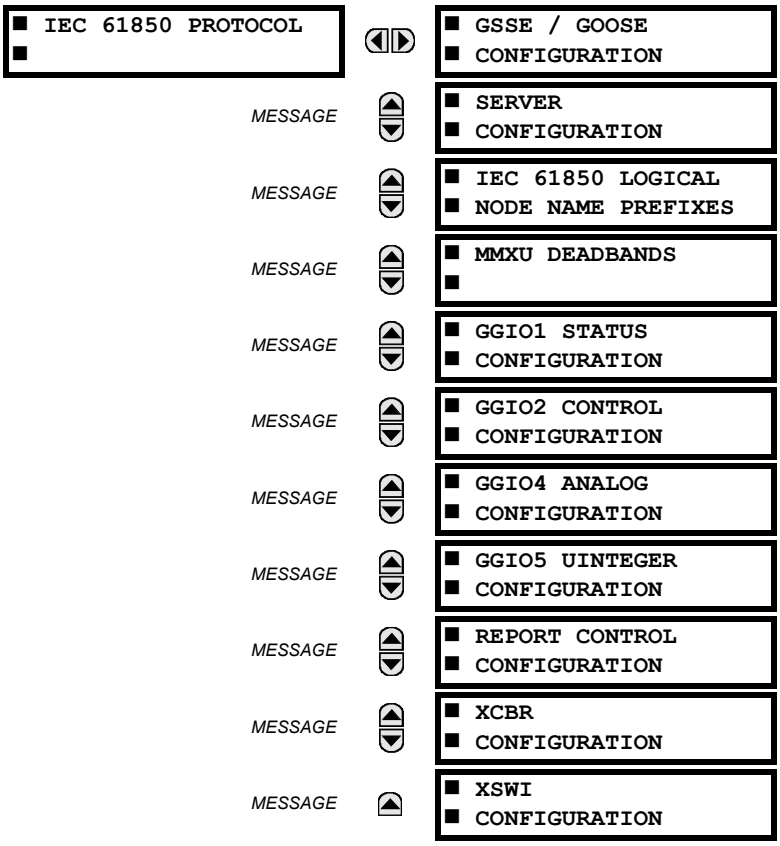

SOFTWARE OPTION

The G60 Generator Protection System is provided with optional IEC 61850 communications capability. This feature is specified as a software option at the time of ordering. See the Order Codes section in chapter 2 for details.

NOTE

IEC 61850 messaging can form part of protection schemes. Consider 61850 settings with the same criticality as protection element settings. To ensure reliable performance of protection schemes utilizing 61850 messaging, it can be desirable to route 61850 traffic on a separate port from SCADA communications, or to use redundant, independent ports, and a high speed network recovery method, such as PRP.

The G60 supports the Manufacturing Message Specification (MMS) protocol as specified by IEC 61850. MMS is supported over two protocol stacks: TCP/IP over Ethernet. The G60 operates as an IEC 61850 server. The Remote Inputs and Outputs section in this chapter describe the peer-to-peer GSSE/GOOSE message scheme.

The EnerVista software includes an interface that is compatible with firmware versions 5.0 to 7.2 to configure subscribers. Use the Simplified GOOSE Configurator in the Offline Window area.

The GSSE/GOOSE configuration main menu is divided into two areas: transmission and reception.

PATH: SETTINGS ⇨ PRODUCT SETUP ⇨⇩ COMMUNICATIONS ⇨⇩ IEC 61850 PROTOCOL ⇨ GSSE/GOOSE CONFIGURATION

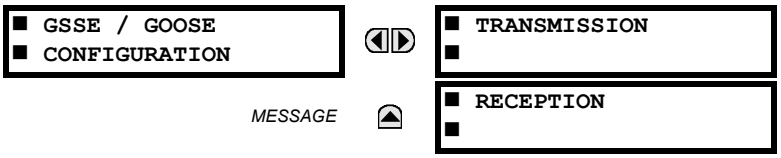

The main transmission menu is shown below:

PATH: SETTINGS ⇨ PRODUCT SETUP ⇨⇩ COMMUNICATIONS ⇨⇩ IEC 61850 PROTOCOL ⇨ GSSE/GOOSE CONFIGURATION ⇨ TRANSMISSION

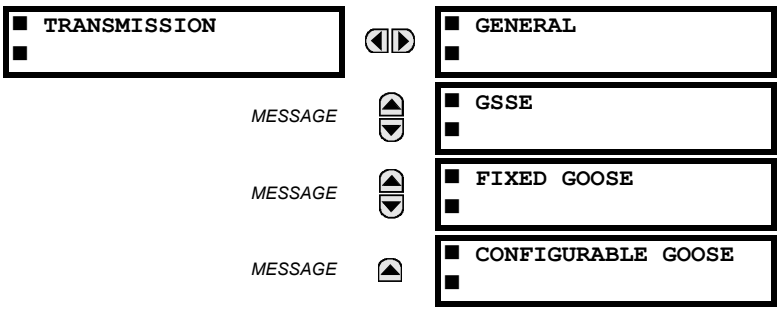

The general transmission settings are shown below:

PATH: SETTINGS ⇨ PRODUCT SETUP ⇨⇩ COMMUNICATIONS ⇨⇩ IEC 61850 PROTOCOL ⇨ GSSE/GOOSE CONFIGURATION ⇨ TRANSMISSION ⇨ GENERAL

Range: 1 to 60 s in steps of 1

The **DEFAULT GSSE/GOOSE UPDATE TIME** sets the time between GSSE or GOOSE messages when there are no remote output state changes to be sent. When remote output data changes, GSSE or GOOSE messages are sent immediately. This setting controls the steady-state *heartbeat* time interval.

The **DEFAULT GSSE/GOOSE UPDATE TIME** setting is applicable to GSSE, fixed G60 GOOSE, and configurable GOOSE.

The GSSE settings are shown below:

PATH: SETTINGS ⇨ PRODUCT SETUP ⇨⇩ COMMUNICATIONS ⇨⇩ IEC 61850 PROTOCOL ⇨ GSSE/GOOSE CONFIGURATION ⇨ TRANSMISSION ⇨⇩ GSEE

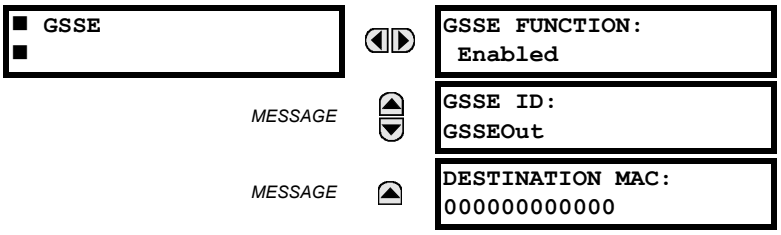

Range: Enabled, Disabled

Range: 65-character ASCII string

Range: standard MAC address

These settings are applicable to GSSE only. If the fixed GOOSE function is enabled, GSSE messages are not transmitted.

The **GSSE ID** setting represents the IEC 61850 GSSE application ID name string sent as part of each GSSE message. This string identifies the GSSE message to the receiving device. In G60 releases previous to 5.0x, this name string was represented by the **RELAY NAME** setting.

The fixed GOOSE settings are shown below:

PATH: SETTINGS ⇨ PRODUCT SETUP ⇨⇩ COMMUNICATIONS ⇨⇩ IEC 61850 PROTOCOL ⇨ GSSE/GOOSE CONFIGURATION ⇨ TRANSMISSION ⇨⇩ FIXED GOOSE

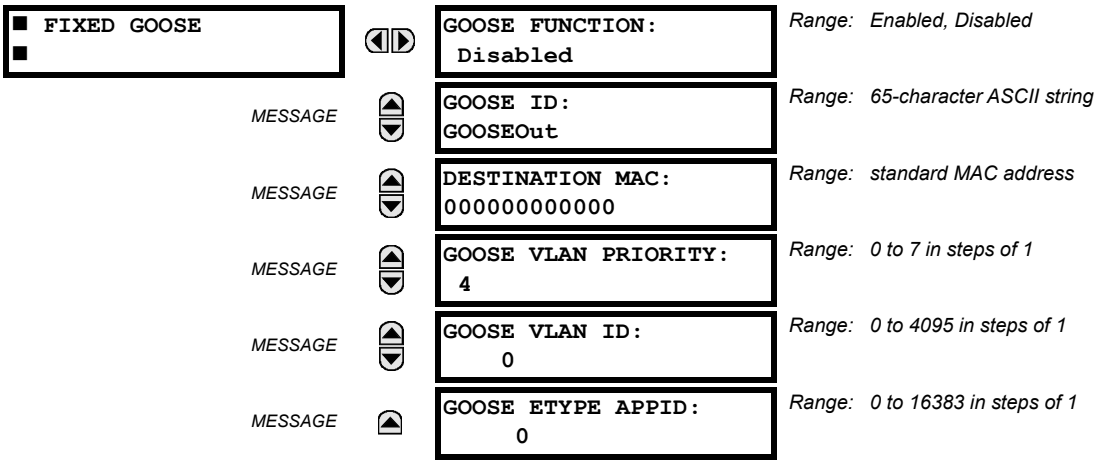

These settings are applicable to fixed (DNA/UserSt) GOOSE only.

The **GOOSE ID** setting represents the IEC 61850 GOOSE application ID (GoID) name string sent as part of each GOOSE message. This string identifies the GOOSE message to the receiving device. In revisions previous to 5.0x, this name string was represented by the **RELAY NAME** setting.

The **DESTINATION MAC** setting allows the destination Ethernet MAC address to be set. This address must be a multicast address; the least significant bit of the first byte must be set. In G60 releases previous to 5.0x, the destination Ethernet MAC address was determined automatically by taking the sending MAC address (that is, the unique, local MAC address of the G60) and setting the multicast bit.

The **GOOSE VLAN PRIORITY** setting indicates the Ethernet priority of GOOSE messages. This allows GOOSE messages to have higher priority than other Ethernet data. The **GOOSE ETYPE APPID** setting allows the selection of a specific application ID for each GOOSE sending device. This value can be left at its default if the feature is not required. Both the **GOOSE VLAN PRIORITY** and **GOOSE ETYPE APPID** settings are required by IEC 61850.

The configurable GOOSE settings are shown below.

PATH: SETTINGS ⇨ PRODUCT SETUP ⇨⇩ COMMUNICATIONS ⇨⇩ IEC 61850 PROTOCOL ⇨ GSSE/GOOSE CONFIGURATION ⇨ TRANSMISSION ⇨⇩ CONFIGURABLE GOOSE ⇨ CONFIGURABLE GOOSE 1(8)

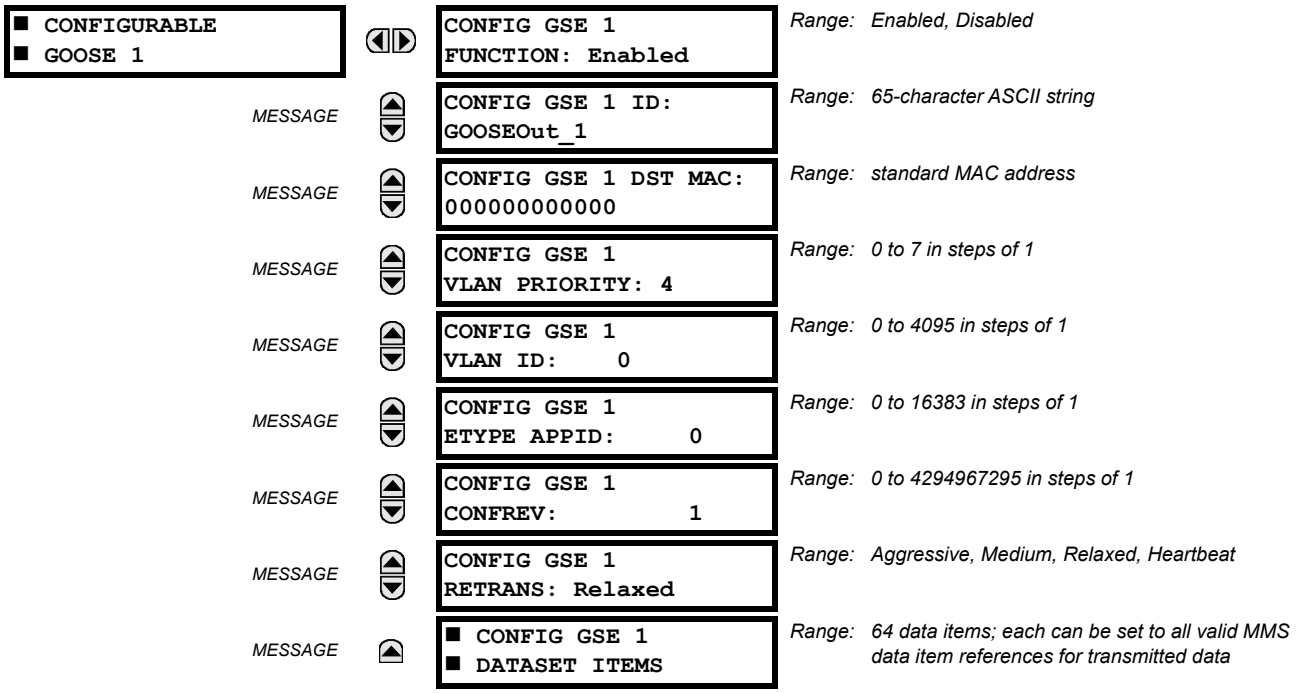

The configurable GOOSE settings allow the G60 to be configured to transmit a number of different datasets within IEC 61850 GOOSE messages. Up to eight different configurable datasets can be configured and transmitted. This is useful for intercommunication between G60 IEDs and devices from other manufacturers that support IEC 61850.

The configurable GOOSE feature allows for the configuration of the datasets to be transmitted or received from the G60. The G60 supports the configuration of eight transmission and reception datasets, allowing for the optimization of data transfer between devices.

Items programmed for dataset 1 and 2 will have changes in their status transmitted as soon as the change is detected. Datasets 1 and 2 should be used for high-speed transmission of data that is required for applications such as transfer tripping, blocking, and breaker fail initiate. At least one digital status value needs to be configured in the required dataset to enable transmission of configured data. Configuring analog data only to dataset 1 or 2 will not activate transmission.

Items programmed for datasets 3 through 8 will have changes in their status transmitted at a maximum rate of every 100 ms. Datasets 3 through 8 will regularly analyze each data item configured within them every 100 ms to identify if any changes have been made. If any changes in the data items are detected, these changes will be transmitted through a GOOSE message. If there are no changes detected during this 100 ms period, no GOOSE message will be sent.

For all datasets 1 through 8, the integrity GOOSE message will still continue to be sent at the pre-configured rate even if no changes in the data items are detected.

The GOOSE functionality was enhanced to prevent the relay from flooding a communications network with GOOSE messages due to an oscillation being created that is triggering a message.

The G60 has the ability of detecting if a data item in one of the GOOSE datasets is erroneously oscillating. This can be caused by events such as errors in logic programming, inputs improperly being asserted and de-asserted, or failed station components. If erroneously oscillation is detected, the G60 will stop sending GOOSE messages from the dataset for a minimum period of one second. Should the oscillation persist after the one second time-out period, the G60 will continue to block transmission of the dataset. The G60 will assert the **MAINTENANCE ALERT: GGIO Ind XXX oscill** self-test error message on the front panel display, where **XXX** denotes the data item detected as oscillating.

For versions 5.70 and higher, the G60 supports four retransmission schemes: aggressive, medium, relaxed, and heartbeat. The aggressive scheme is only supported in fast type 1A GOOSE messages (GOOSEOut 1 and GOOSEOut 2). For slow GOOSE messages (GOOSEOut 3 to GOOSEOut 8) the aggressive scheme is the same as the medium scheme.

The table shows details about each scheme. Times are maximum values. Retransmitted messages can occur faster than the times listed.

Table 5–7: GOOSE RETRANSMISSION SCHEMES

SCHEME	SQ NUM	TIME FROM THE EVENT	TIME BETWEEN MESSAGES	COMMENT	TIME ALLOWED TO LIVE IN MESSAGE
Aggressive	0	0 ms	0 ms	Event	2000 ms
	1	4 ms	4 ms	T1	2000 ms
	2	8 ms	4 ms	T1	2000 ms
	3	16 ms	8 ms	T2	Heartbeat * 4.5
	4	Heartbeat	Heartbeat	T0	Heartbeat * 4.5
	5	Heartbeat	Heartbeat	T0	Heartbeat * 4.5
Medium	0	0 ms	0 ms	Event	2000 ms
	1	16 ms	16 ms	T1	2000 ms
	2	32 ms	16 ms	T1	2000 ms
	3	64 ms	32 ms	T2	Heartbeat * 4.5
	4	Heartbeat	Heartbeat	T0	Heartbeat * 4.5
	5	Heartbeat	Heartbeat	T0	Heartbeat * 4.5
Relaxed	0	0 ms	0 ms	Event	2000 ms
	1	100 ms	100 ms	T1	2000 ms
	2	200 ms	100 ms	T1	2000 ms
	3	700 ms	500 ms	T2	Heartbeat * 4.5
	4	Heartbeat	Heartbeat	T0	Heartbeat * 4.5
	5	Heartbeat	Heartbeat	T0	Heartbeat * 4.5
Heartbeat	0	0 ms	0 ms	Event	2000 ms
	1	Heartbeat	Heartbeat	T1	2000 ms
	2	Heartbeat	Heartbeat	T1	2000 ms
	3	Heartbeat	Heartbeat	T2	Heartbeat * 4.5
	4	Heartbeat	Heartbeat	T0	Heartbeat * 4.5
	5	Heartbeat	Heartbeat	T0	Heartbeat * 4.5

The configurable GOOSE feature is recommended for applications that require GOOSE data transfer between UR-series IEDs and devices from other manufacturers. Fixed GOOSE is recommended for applications that require GOOSE data transfer between UR-series IEDs.

IEC 61850 GOOSE messaging contains a number of configurable parameters, all of which must be correct to achieve the successful transfer of data. It is critical that the configured datasets at the transmission and reception devices are an exact match in terms of data structure, and that the GOOSE addresses and name strings match exactly. Manual configuration is possible, but third-party substation configuration software may be used to automate the process. The EnerVista UR Setup software can produce IEC 61850 ICD files and import IEC 61850 SCD files produced by a substation configurator (as outlined in the IEC 61850 appendix).

The following example illustrates the configuration required to transfer IEC 61850 data items between two devices. The general steps required for transmission configuration are:

1. Configure the transmission dataset.
2. Configure the GOOSE service settings.
3. Configure the data.

The general steps required for reception configuration are:

1. Configure the reception dataset.
2. Configure the GOOSE service settings.
3. Configure the data.

This example shows how to configure the transmission and reception of three IEC 61850 data items: a single point status value, its associated quality flags, and a floating point analog value.

The following procedure illustrates the transmission configuration.

1. Configure the transmission dataset by making the following changes in the **PRODUCT SETUP** ⇨⇩ **COMMUNICATION** ⇨⇩ **IEC 61850 PROTOCOL** ⇨ **GSSE/GOOSE CONFIGURATION** ⇨ **TRANSMISSION** ⇨⇩ **CONFIGURABLE GOOSE** ⇨ **CONFIGURABLE GOOSE 1** ⇨⇩ **CONFIG GSE 1 DATASET ITEMS** settings menu:
   - Set **ITEM 1** to “GGIO1.ST.Ind1.q” to indicate quality flags for GGIO1 status indication 1.
   - Set **ITEM 2** to “GGIO1.ST.Ind1.stVal” to indicate the status value for GGIO1 status indication 1.
   - Set **ITEM 3** to “MMXU1.MX.Hz.mag.f” to indicate the analog frequency magnitude for MMXU1 (the metered frequency for SRC1).

   The transmission dataset now contains a quality flag, a single point status Boolean value, and a floating point analog value. The reception dataset on the receiving device must exactly match this structure.
2. Configure the GOOSE service settings by making the following changes in the **PRODUCT SETUP** ⇨⇩ **COMMUNICATION** ⇨⇩ **IEC 61850 PROTOCOL** ⇨ **GSSE/GOOSE CONFIGURATION** ⇨ **TRANSMISSION** ⇨⇩ **CONFIGURABLE GOOSE** ⇨ **CONFIGURABLE GOOSE 1** settings menu:
   - Set **CONFIG GSE 1 FUNCTION** to “Enabled”.
   - Set **CONFIG GSE 1 ID** to an appropriate descriptive string (the default value is “GOOSEOut_1”).
   - Set **CONFIG GSE 1 DST MAC** to a multicast address (for example, 01 00 00 12 34 56).
   - Set the **CONFIG GSE 1 VLAN PRIORITY**; the default value of “4” is OK for this example.
   - Set the **CONFIG GSE 1 VLAN ID** value; the default value is “0”, but some switches may require this value to be “1”.
   - Set the **CONFIG GSE 1 ETYPE APPID** value. This setting represents the ETHERTYPE application ID and must match the configuration on the receiver (the default value is “0”).
   - Set the **CONFIG GSE 1 CONFREV** value. This value changes automatically as described in IEC 61850 part 7-2. For this example it can be left at its default value.
3. Configure the data by making the following changes in the **PRODUCT SETUP** ⇨⇩ **COMMUNICATION** ⇨⇩ **IEC 61850 PROTOCOL** ⇨ **GGIO1 STATUS CONFIGURATION** settings menu:
   - Set **GGIO1 INDICATION 1** to a FlexLogic operand used to provide the status of GGIO1.ST.Ind1.stVal (for example, a contact input, virtual input, a protection element status, etc.).
4. Configure the MMXU1 Hz Deadband by making the following changes in the **PRODUCT SETUP** ⇨⇩ **COMMUNICATION** ⇨⇩ **IEC 61850 PROTOCOL** ⇨⇩ **MMXU DEADBANDS**⇨⇩ **MMXU1 DEADBANDS** settings menu:
   - Set **MMXU1 HZ DEADBAND** to “0.050%”. This will result in an update to the MMXU1.MX.mag.f analog value with a change greater than 45 mHz, from the previous MMXU1.MX.mag.f value, in the source frequency.

The G60 must be rebooted (control power removed and re-applied) before these settings take effect.

The following procedure illustrates the reception configuration.

1. Configure the reception dataset by making the following changes in the **PRODUCT SETUP** ⇨⇩ **COMMUNICATION** ⇨⇩ **IEC 61850 PROTOCOL** ⇨ **GSSE/GOOSE CONFIGURATION** ⇨⇩ **RECEPTION** ⇨⇩ **CONFIGURABLE GOOSE** ⇨ **CONFIGURABLE GOOSE 1** ⇨⇩ **CONFIG GSE 1 DATASET ITEMS** settings menu:
   - Set **ITEM 1** to “GGIO3.ST.Ind1.q” to indicate quality flags for GGIO3 status indication 1.
   - Set **ITEM 2** to “GGIO3.ST.Ind1.stVal” to indicate the status value for GGIO3 status indication 1.
   - Set **ITEM 3** to “GGIO3.MX.AnIn1.mag.f” to indicate the analog magnitude for GGIO3 analog input 1.

   The reception dataset now contains a quality flag, a single point status Boolean value, and a floating point analog value. This matches the transmission dataset configuration above.
2. Configure the GOOSE service settings by making the following changes in the **INPUTS/OUTPUTS** ⇨⇩ **REMOTE DEVICES** ⇨⇩ **REMOTE DEVICE 1** settings menu:
   - Set **REMOTE DEVICE 1 ID** to match the GOOSE ID string for the transmitting device. Enter “GOOSEOut_1”.

– Set **REMOTE DEVICE 1 ETYPE APPID** to match the ETHERTYPE application ID from the transmitting device. This is "0" in the example above.

– Set the **REMOTE DEVICE 1 DATASET** value. This value represents the dataset number in use. Since we are using configurable GOOSE 1 in this example, program this value as "GOOSEIn 1".

3. Configure the Boolean data by making the following changes in the **INPUTS/OUTPUTS ⇨⇩ REMOTE INPUTS ⇨⇩ REMOTE INPUT 1** settings menu:

   – Set **REMOTE IN 1 DEVICE** to "GOOSEOut_1".

   – Set **REMOTE IN 1 ITEM** to "Dataset Item 2". This assigns the value of the GGIO3.ST.Ind1.stVal single point status item to remote input 1.

4. Configure the analog data by making the following changes in the **INPUTS/OUTPUTS ⇨⇩ IEC 61850 GOOSE ANALOG INPUTS** settings menu:

   – Set the **IEC61850 GOOSE ANALOG INPUT 1 DEFAULT VALUE** to "60.000".

   – Enter "Hz" for the **IEC61850 GOOSE ANALOG INPUT 1 UNITS** setting.

The GOOSE analog input 1 can now be used as a FlexAnalog value in a FlexElement or in other settings. The G60 must be rebooted (control power removed and re-applied) before these settings take effect.

The value of GOOSE analog input 1 in the receiving device will be determined by the MMXU1.MX.Hz.mag.f value in the sending device. This MMXU value is determined by the source 1 frequency value and the MMXU Hz deadband setting of the sending device.

Remote input 1 can now be used in FlexLogic equations or other settings. The G60 must be rebooted (control power removed and re-applied) before these settings take effect.

The value of remote input 1 (Boolean on or off) in the receiving device will be determined by the GGIO1.ST.Ind1.stVal value in the sending device. The above settings will be automatically populated by the EnerVista UR Setup software when a complete SCD file is created by third party substation configurator software.

For intercommunication between G60 IEDs, the fixed (DNA/UserSt) dataset can be used. The DNA/UserSt dataset contains the same DNA and UserSt bit pairs that are included in GSSE messages. All GOOSE messages transmitted by the G60 (DNA/UserSt dataset and configurable datasets) use the IEC 61850 GOOSE messaging services (for example, VLAN support).

NOTE

Set the **CONFIG GSE 1 FUNCTION** function to "Disabled" when configuration changes are required. Once changes are entered, return the **CONFIG GSE 1 FUNCTION** to "Enabled" and restart the unit for changes to take effect.

PATH: SETTINGS ⇨ PRODUCT SETUP ⇨⇩ COMMUNICATIONS ⇨⇩ IEC 61850 PROTOCOL ⇨ GSSE/GOOSE CONFIGURATION ⇨ TRANSMISSION ⇨⇩ CONFIGURABLE GOOSE ⇨ CONFIGURABLE GOOSE 1(8) ⇨⇩ CONFIG GSE 1(64) DATA ITEMS

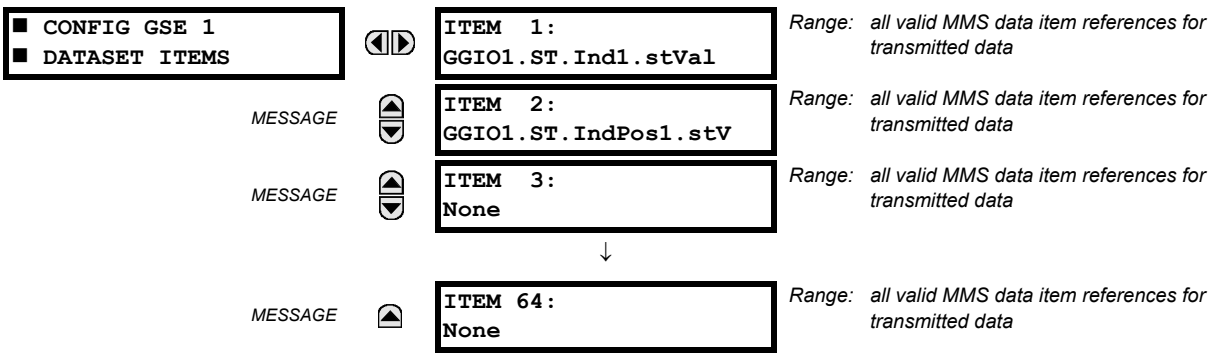

To create a configurable GOOSE dataset that contains an IEC 61850 Single Point Status indication and its associated quality flags, the following dataset items can be selected: "GGIO1.ST.Ind1.stVal" and "GGIO1.ST.Ind1.q". The G60 will then create a dataset containing these two data items. The status value for GGIO1.ST.Ind1.stVal is determined by the FlexLogic operand assigned to GGIO1 indication 1. Changes to this operand will result in the transmission of GOOSE messages containing the defined dataset.

The main reception menu is applicable to configurable GOOSE only and contains the configurable GOOSE dataset items for reception:

PATH: SETTINGS ⇨ PRODUCT SETUP ⇨⇩ COMMUNICATIONS ⇨⇩ IEC 61850 PROTOCOL ⇨ GSSE/GOOSE CONFIGURATION ⇨ RECEPTION ⇨⇩ CONFIGURABLE GOOSE ⇨ CONFIGURABLE GOOSE 1(16) ⇨⇩ CONFIG GSE 1(32) DATA ITEMS

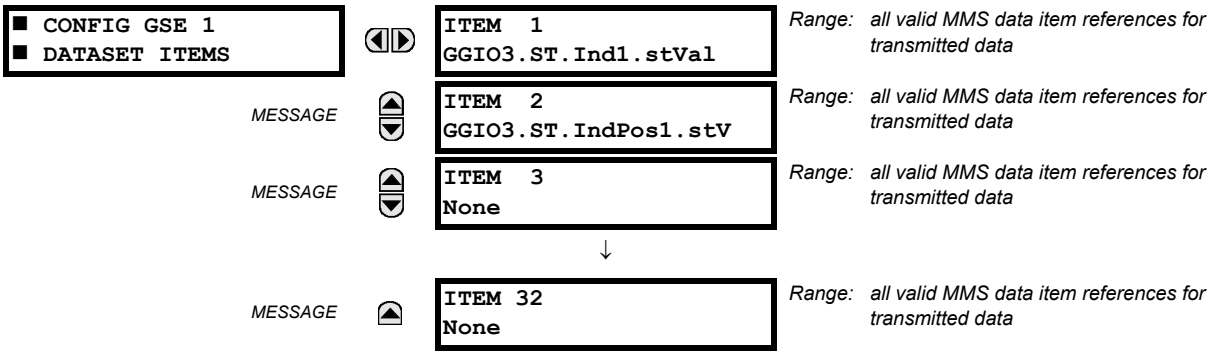

The configurable GOOSE settings allow the G60 to be configured to receive a number of different datasets within IEC 61850 GOOSE messages. Up to 16 different configurable datasets can be configured for reception. This is useful for inter-communication between G60 IEDs and devices from other manufacturers that support IEC 61850.

For intercommunication between G60 IEDs, the fixed (DNA/UserSt) dataset can be used. The DNA/UserSt dataset contains the same DNA and UserSt bit pairs that are included in GSSE messages.

To set up a G60 to receive a configurable GOOSE dataset that contains two IEC 61850 single point status indications, the following dataset items can be selected (for example, for configurable GOOSE dataset 1): “GGIO3.ST.Ind1.stVal” and “GGIO3.ST.Ind2.stVal”. The G60 will then create a dataset containing these two data items. The Boolean status values from these data items can be utilized as remote input FlexLogic operands. First, the **REMOTE DEVICE 1(16) DATASET** setting must be set to contain dataset “GOOSEIn 1” (that is, the first configurable dataset). Then **REMOTE IN 1(16) ITEM** settings must be set to “Dataset Item 1” and “Dataset Item 2”. These remote input FlexLogic operands will then change state in accordance with the status values of the data items in the configured dataset.

Double-point status values may be included in the GOOSE dataset. Received values are populated in the GGIO3.ST.IndPos1.stVal and higher items.

Floating point analog values originating from MMXU logical nodes may be included in GOOSE datasets. Deadband (non-instantaneous) values can be transmitted. Received values are used to populate the GGIO3.MX.AnIn1 and higher items. Received values are also available as FlexAnalog parameters (GOOSE analog In1 and up).

NOTE

GGIO3.MX.AnIn1 to GGIO3.MX.AnIn32 can only be used once for all 16 reception datasets.

The main menu for the IEC 61850 server configuration is shown below.

PATH: SETTINGS ⇨ PRODUCT SETUP ⇨⇩ COMMUNICATIONS ⇨⇩ IEC 61850 PROTOCOL ⇨⇩ SERVER CONFIGURATION

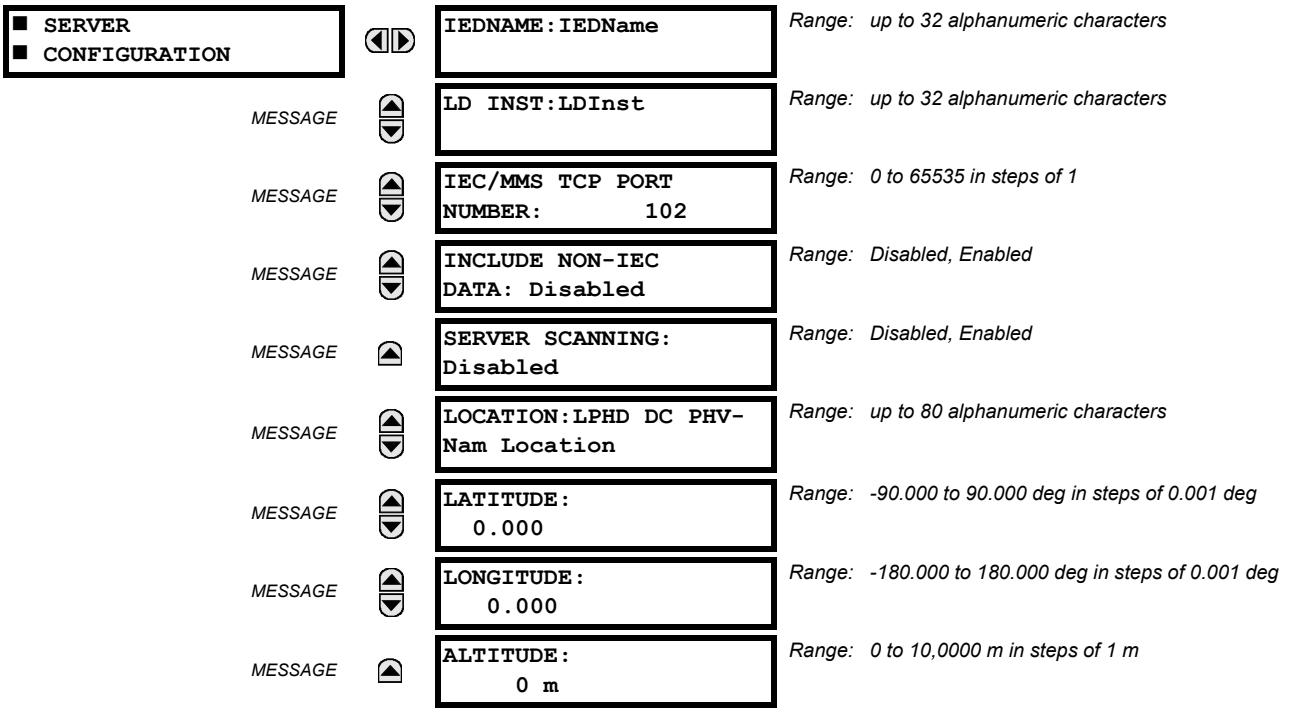

The **IEDNAME** and **LD INST** settings represent the MMS domain name (IEC 61850 logical device) where all IEC/MMS logical nodes are located. Valid characters for these values are upper and lowercase letters, numbers, and the underscore (_) character, and the first character in the string must be a letter. This conforms to the IEC 61850 standard. The **LOCATION** is a variable string and can be composed of ASCII characters. This string appears within the PhyName of the LPHD node.

The **IEC/MMS TCP PORT NUMBER** setting allows the user to change the TCP port number for MMS connections. The **INCLUDE NON-IEC DATA** setting determines whether or not the "UR" MMS domain will be available. This domain contains a large number of UR-series specific data items that are not available in the IEC 61850 logical nodes. This data does not follow the IEC 61850 naming conventions. For communications schemes that strictly follow the IEC 61850 standard, this setting should be "Disabled".

NOTE

When a 0 value is involved in a change, the changes to the **IEC/MMS TCP PORT NUMBER** setting take effect when the G60 is restarted.

Do not set more than one protocol to the same TCP/UDP port number, as this results in unreliable operation of those protocols.

The **SERVER SCANNING** feature should be set to "Disabled" when IEC 61850 client/server functionality is not required. IEC 61850 has two modes of functionality: GOOSE/GSSE inter-device communication and client/server communication. If the GOOSE/GSSE functionality is required without the IEC 61850 client server feature, then server scanning can be disabled to increase CPU resources. When server scanning is disabled, there is no updating of the IEC 61850 logical node status values in the G60. Clients are still able to connect to the server (G60 relay), but most data values are not updated. This setting does not affect GOOSE/GSSE operation.

NOTE

Changes to the **IEDNAME** setting, **LD INST** setting, and GOOSE dataset take effect when the G60 is restarted.

The main menu for the IEC 61850 logical node name prefixes is shown below.

PATH: SETTINGS ⇨ PRODUCT SETUP ⇨⇩ COMMUNICATIONS ⇨⇩ IEC 61850 PROTOCOL ⇨⇩ IEC 61850 LOGICAL NODE NAME PREFIXES

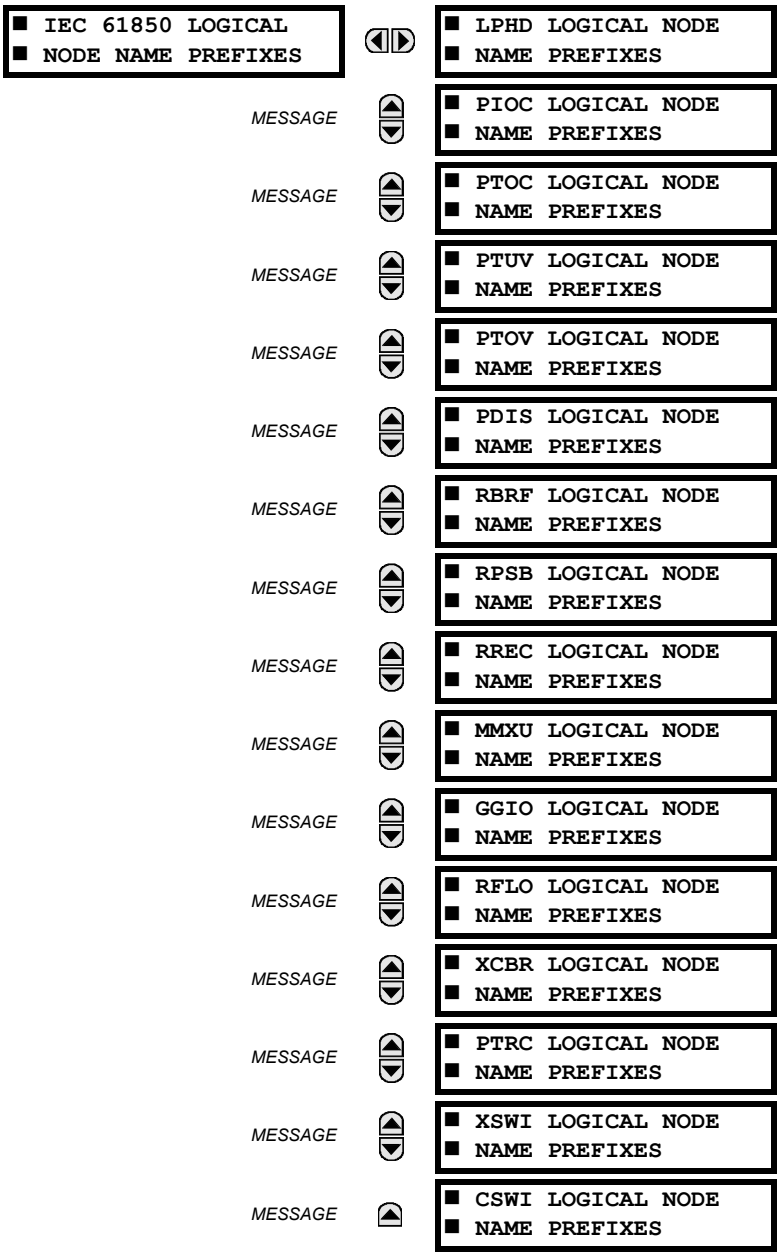

The IEC 61850 logical node name prefix settings are used to create name prefixes to uniquely identify each logical node. For example, the logical node “PTOC1” may have the name prefix “abc”. The full logical node name will then be “abcMMXU1”. Valid characters for the logical node name prefixes are upper and lowercase letters, numbers, and the underscore (_) character, and the first character in the prefix must be a letter. This conforms to the IEC 61850 standard.

Changes to the logical node prefixes will not take effect until the G60 is restarted.

The main menu for the IEC 61850 MMXU deadbands is shown below.

PATH: SETTINGS ⇨ PRODUCT SETUP ⇨⇩ COMMUNICATIONS ⇨⇩ IEC 61850 PROTOCOL ⇨⇩ MMXU DEADBANDS

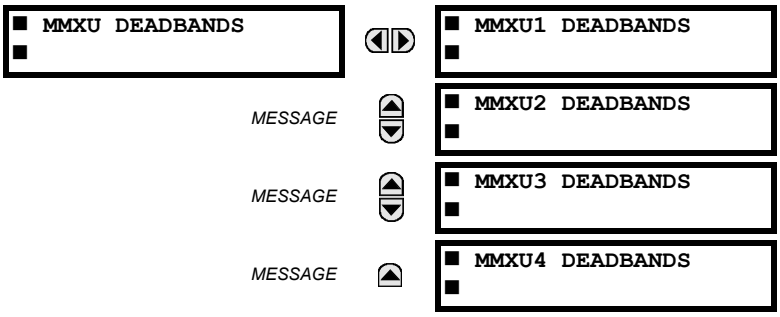

The MMXU deadband settings represent the deadband values used to determine when the update the MMXU “mag” and “cVal” values from the associated “instmag” and “instcVal” values. The “mag” and “cVal” values are used for the IEC 61850 buffered and unbuffered reports. These settings correspond to the associated “db” data items in the CF functional constraint of the MMXU logical node, as per the IEC 61850 standard. According to IEC 61850-7-3, the db value “shall represent the percentage of difference between the maximum and minimum in units of 0.001%”. Thus, it is important to know the maximum value for each MMXU measured quantity, since this represents the 100.00% value for the deadband.

The minimum value for all quantities is 0; the maximum values are as follows:

- phase current: 46 × phase CT primary setting
- neutral current: 46 × ground CT primary setting
- voltage: 275 × VT ratio setting
- power (real, reactive, and apparent): 46 × phase CT primary setting × 275 × VT ratio setting
- frequency: 90 Hz
- power factor: 2

The GGIO1 status configuration points are shown below:

PATH: SETTINGS ⇨ PRODUCT SETUP ⇨⇩ COMMUNICATIONS ⇨⇩ IEC 61850 PROTOCOL ⇨⇩ GGIO1 STATUS CONFIGURATION

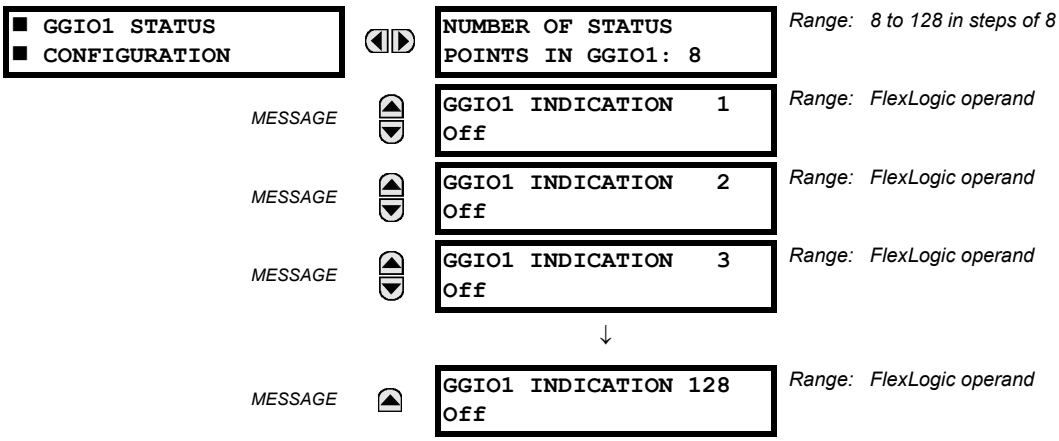

The **NUMBER OF STATUS POINTS IN GGIO1** setting specifies the number of “Ind” (single point status indications) that are instantiated in the GGIO1 logical node. Changes to the **NUMBER OF STATUS POINTS IN GGIO1** setting will not take effect until the G60 is restarted.

The GGIO2 control configuration points are shown below:

PATH: SETTINGS ⇨ PRODUCT SETUP ⇨⇩ COMMUNICATIONS ⇨⇩ IEC 61850 PROTOCOL ⇨⇩ GGIO2 CONTROL CONFIGURATION ⇨ GGIO2 CF SPSCO 1(64)

The GGIO2 control configuration settings are used to set the control model for each input. The available choices are "0" (status only), "1" (direct control), and "2" (SBO with normal security). The GGIO2 control points are used to control the G60 virtual inputs.

The GGIO4 analog configuration points are shown below:

PATH: SETTINGS ⇨ PRODUCT SETUP ⇨⇩ COMMUNICATIONS ⇨⇩ IEC 61850 PROTOCOL ⇨⇩ GGIO4 ANALOG CONFIGURATION

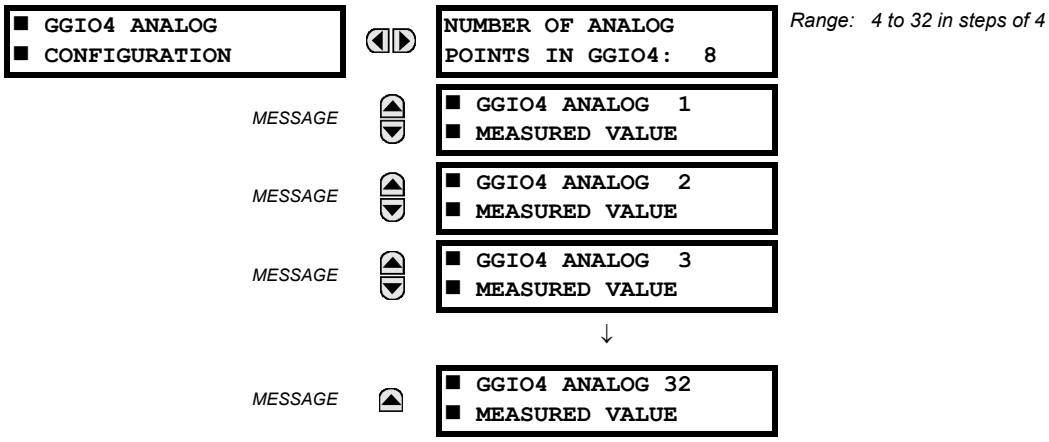

The **NUMBER OF ANALOG POINTS** setting determines how many analog data points will exist in GGIO4. When this value is changed, the G60 must be rebooted in order to allow the GGIO4 logical node to be re-instantiated and contain the newly configured number of analog points.

The measured value settings for each of the 32 analog values are shown below.

PATH: SETTINGS ⇨ PRODUCT... ⇨⇩ COMMUNICATIONS ⇨⇩ IEC 61850 PROTOCOL ⇨⇩ GGIO4 ANALOG CONFIGURATION ⇨ GGIO4 ANALOG 1(32) MEASURED VALUE

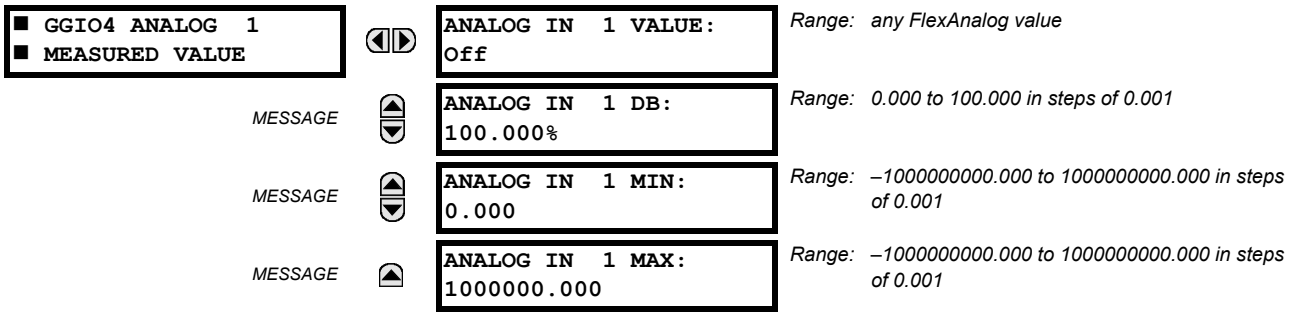

These settings are configured as follows.

- **ANALOG IN 1 VALUE**: This setting selects the FlexAnalog value to drive the instantaneous value of each GGIO4 analog status value (GGIO4.MX.AnIn1.instMag.f).
- **ANALOG IN 1 DB**: This setting specifies the deadband for each analog value. Refer to IEC 61850-7-1 and 61850-7-3 for details. The deadband is used to determine when to update the deadbanded magnitude from the instantaneous magnitude. The deadband is a percentage of the difference between the maximum and minimum values.
- **ANALOG IN 1 MIN**: This setting specifies the minimum value for each analog value. Refer to IEC 61850-7-1 and 61850-7-3 for details. This minimum value is used to determine the deadband. The deadband is used in the determination of the deadbanded magnitude from the instantaneous magnitude.
- **ANALOG IN 1 MAX**: This setting defines the maximum value for each analog value. Refer to IEC 61850-7-1 and 61850-7-3 for details. This maximum value is used to determine the deadband. The deadband is used in the determination of the deadbanded magnitude from the instantaneous magnitude.

NOTE

Note that the **ANALOG IN 1 MIN** and **ANALOG IN 1 MAX** settings are stored as IEEE 754 / IEC 60559 floating point numbers. Because of the large range of these settings, not all values can be stored. Some values may be rounded to the closest possible floating point number.

The GGIO5 integer configuration points are shown below:

PATH: SETTINGS ⇨ PRODUCT SETUP ⇨⇩ COMMUNICATIONS ⇨⇩ IEC 61850 PROTOCOL ⇨⇩ GGIO5 ANALOG CONFIGURATION

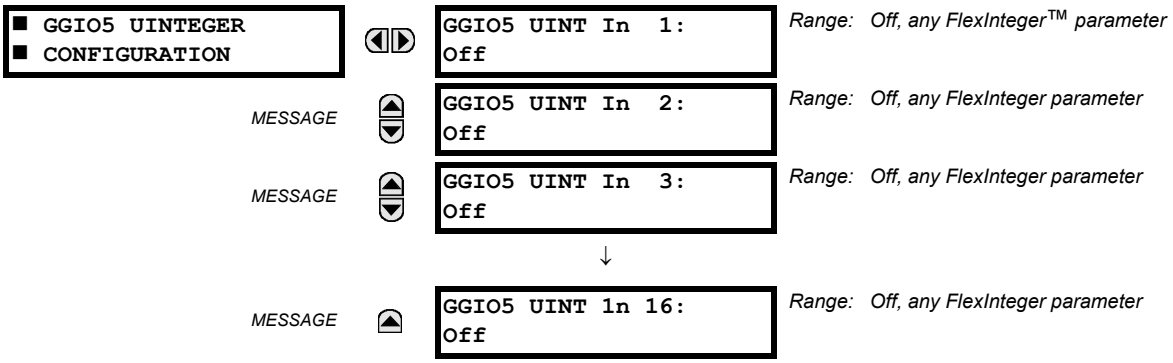

The GGIO5 logical node allows IEC 61850 client access to integer data values. This allows access to as many as 16 unsigned integer value points, associated timestamps, and quality flags. The method of configuration is similar to that of GGIO1 (binary status values). The settings allow the selection of FlexInteger values for each GGIO5 integer value point.

It is intended that clients use GGIO5 to access generic integer values from the G60. Additional settings are provided to allow the selection of the number of integer values available in GGIO5 (1 to 16), and to assign FlexInteger values to the GGIO5 integer inputs. The following setting is available for all GGIO5 configuration points.

- **GGIO5 UINT IN 1 VALUE**: This setting selects the FlexInteger value to drive each GGIO5 integer status value (GGIO5.ST.UIntIn1). This setting is stored as an 32-bit unsigned integer value.

The report control configuration settings are shown below:

PATH: SETTINGS ⇨ PRODUCT SETUP ⇨⇩ COMMUNICATIONS ⇨⇩ IEC 61850 PROTOCOL ⇨⇩ REPORT CONTROL CONFIGURATION ⇨ CONFIGURABLE REPORT 1 ⇨ REPORT 1 DATASET ITEMS

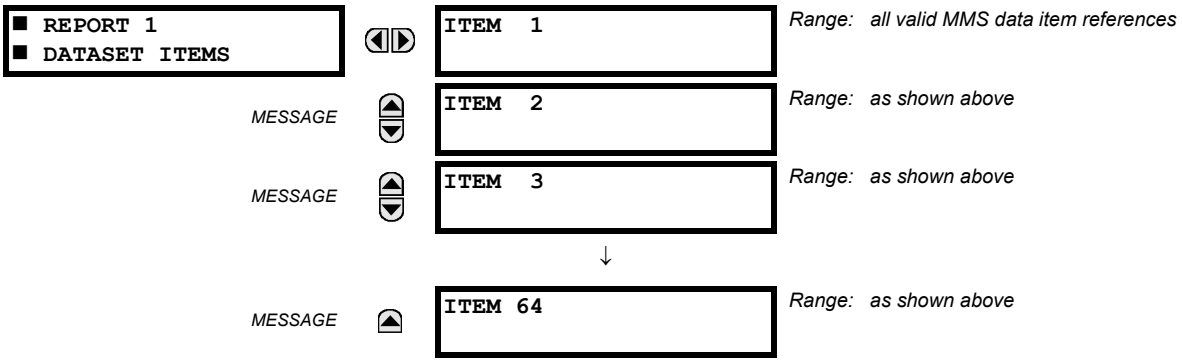

To create the dataset for logical node LN, program the **ITEM 1** to **ITEM 64** settings to a value from the list of IEC 61850 data attributes supported by the G60. Changes to the dataset will only take effect when the G60 is restarted. It is recommended to use reporting service from logical node LLN0 if a user needs some (but not all) data from already existing GGIO1, GGIO4, and MMXU4 points and their quantity is not greater than 64 minus the number items in this dataset.

The breaker configuration settings are shown below. Changes to these values take effect when the UR is restarted:

PATH: SETTINGS ⇨ PRODUCT SETUP ⇨⇩ COMMUNICATIONS ⇨⇩ IEC 61850 PROTOCOL ⇨⇩ XCBR CONFIGURATION ⇨ XCBR1(6) CONFIGURATION

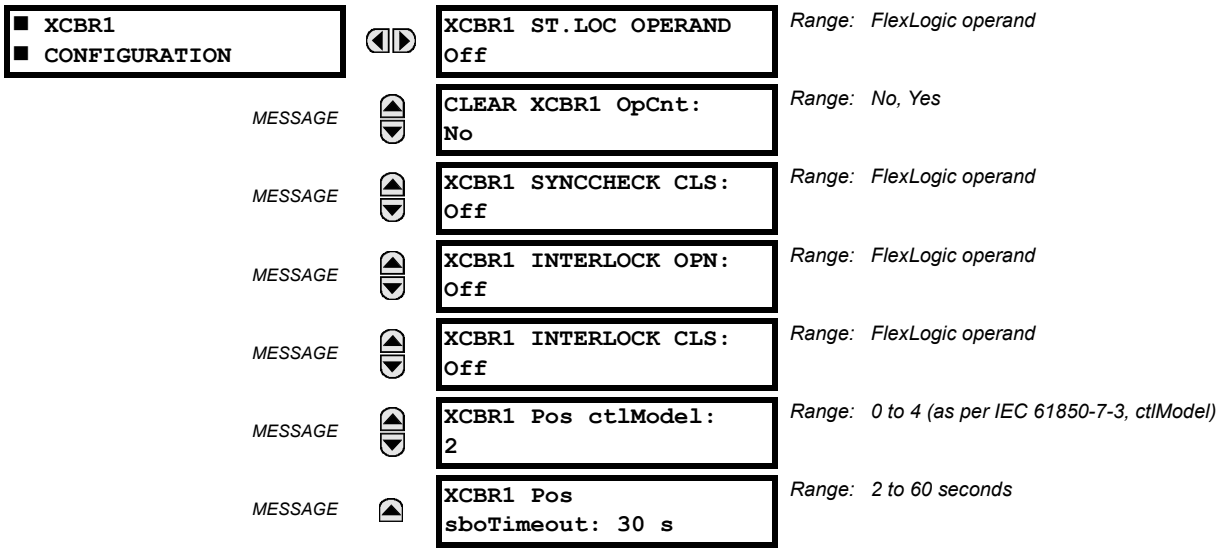

The XCBR1 ST.LOC OPERAND setting is used to inhibit 61850 control commands to close or open breaker through UR Breaker Control element. See the Breaker Control element logic diagram for more information.

The CLEAR XCBR1 OpCnt setting allows clearing the breaker operating counter. As breakers operate by opening and closing, the XCBR operating counter status attribute (OpCnt) increments with every operation. Frequent breaker operation can result in very large OpCnt values over time. This setting allows the OpCnt to be reset to “0” for XCBR1.

The XCBR1 SYNCCHECK CLS setting is used to supervise a close command with a synchrocheck condition within XCBR logical node. If a Close with SynchroCheck is requested (through a SelectWithValue service) and the SynchroCheck condition is not satisfied, a Negative Response (-Rsp) is issued with the REASON CODE of Blocked-by-synchrocheck.

The XCBR1 INTERLOCK OPN/CLS settings are used to assign an operand, which is linked into the EnaOpn or EnaCls INTERLOCKED inputs respectively of the XCBR. When this operand is asserted, XCBR logical node inhibits execution of the open and close commands respectively. If select before operate (SBO) with Extended Security is requested and Interlock condition exists, the UR responds with a Negative response (-Rsp) with the Reason Code Blocked-by-interlocking.

The XCBR1 Pos ctlModel setting is used to select control model per IEC 61850-7-3. The following control models are supported by URs:

0 — Status only

1 — Direct control with normal security (direct-operate)

2 — SBO control with normal security (operate-once)

3 — Direct control with enhanced security (direct-operate)

4 — SBO control with enhanced security (operate-once)

See IEC 61850-7-2 for complete details on these control models.

The XCBR1 Pos sboTimeout setting is used to select SBO timeout value. To be successful, the IEC 61850 "operate" command must be executed after the "select" command within the XCBR1 Pos sboTimeout setting value.

The disconnect switch configuration settings are shown below. Changes to these values will not take effect until the UR is restarted:

PATH: SETTINGS ⇨ PRODUCT SETUP ⇨⇩ COMMUNICATIONS ⇨⇩ IEC 61850 PROTOCOL ⇨⇩ XSWI CONFIGURATION

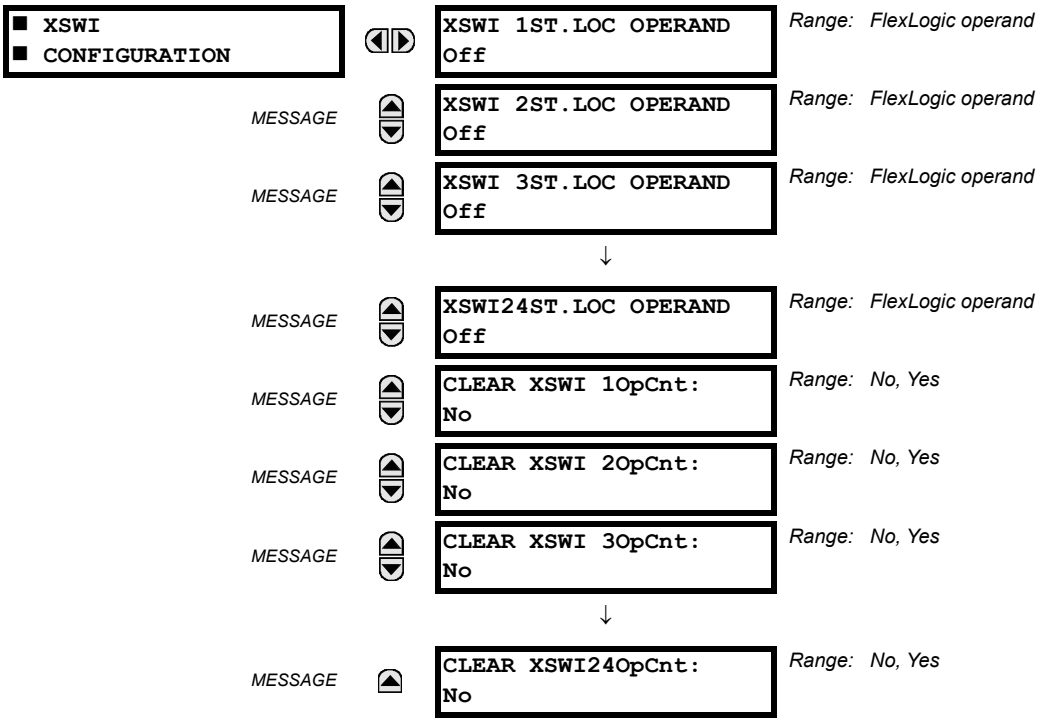

The **CLEAR XSWI1 OPCNT** setting represents the disconnect switch operating counter. As disconnect switches operate by opening and closing, the XSWI operating counter status attribute (OpCnt) increments with every operation. Frequent switch operation may result in very large OpCnt values over time. This setting allows the OpCnt to be reset to "0" for XSWI 1.

NOTE

Since GSSE/GOOSE messages are multicast Ethernet by specification, they are not usually be forwarded by network routers. However, GOOSE messages may be forwarded by routers if the router has been configured for VLAN functionality.

m) WEB SERVER HTTP PROTOCOL

PATH: SETTINGS ⇨ PRODUCT SETUP ⇨⇩ COMMUNICATIONS ⇨⇩ WEB SERVER HTTP PROTOCOL

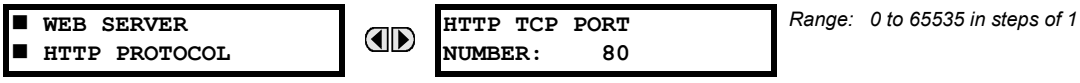

The G60 contains an embedded web server and is capable of transferring web pages to a web browser such as Internet Explorer or Firefox. The web pages are organized as a series of menus that can be accessed starting at the G60 "Main Menu". Web pages are available showing IEC 60870-5-104 points lists, Modbus registers, event records, fault reports, and so on. First connect the UR and a computer to an Ethernet network, then enter the IP address of the G60 Ethernet port employed into the "Address" box of the web browser.

NOTE

When the port is set to 0, the change takes effect when the G60 is restarted.

Do not set more than one protocol to the same TCP/UDP port number, as this results in unreliable operation of those protocols.

n) TFTP PROTOCOL

PATH: SETTINGS ⇨ PRODUCT SETUP ⇨⇩ COMMUNICATIONS ⇨⇩ TFTP PROTOCOL

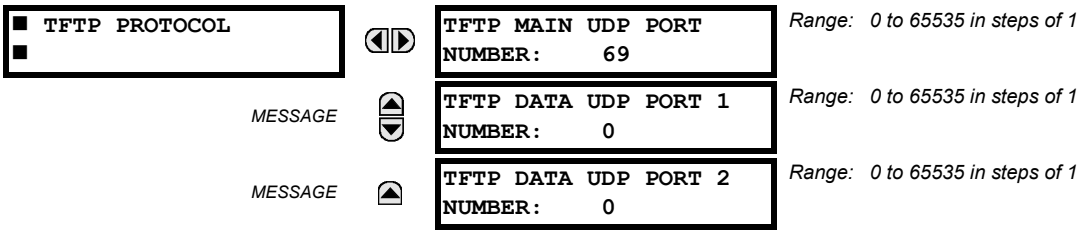

The Trivial File Transfer Protocol (TFTP) can be used to transfer files from the G60 over a network. The G60 operates as a TFTP server. TFTP client software is available from various sources, including Microsoft Windows NT. The `dir.txt` file obtained from the G60 contains a list and description of all available files (event records, oscillography, etc.).

NOTE

When the **TFTP MAIN UDP PORT NUMBER** is set to 0, the change takes effect when the G60 is restarted.

Do not set more than one protocol to the same TCP/UDP port number, as this results in unreliable operation of those protocols.

o) IEC 60870-5-104 PROTOCOL

PATH: SETTINGS ⇨ PRODUCT SETUP ⇨⇩ COMMUNICATIONS ⇨⇩ IEC 60870-5-104 PROTOCOL

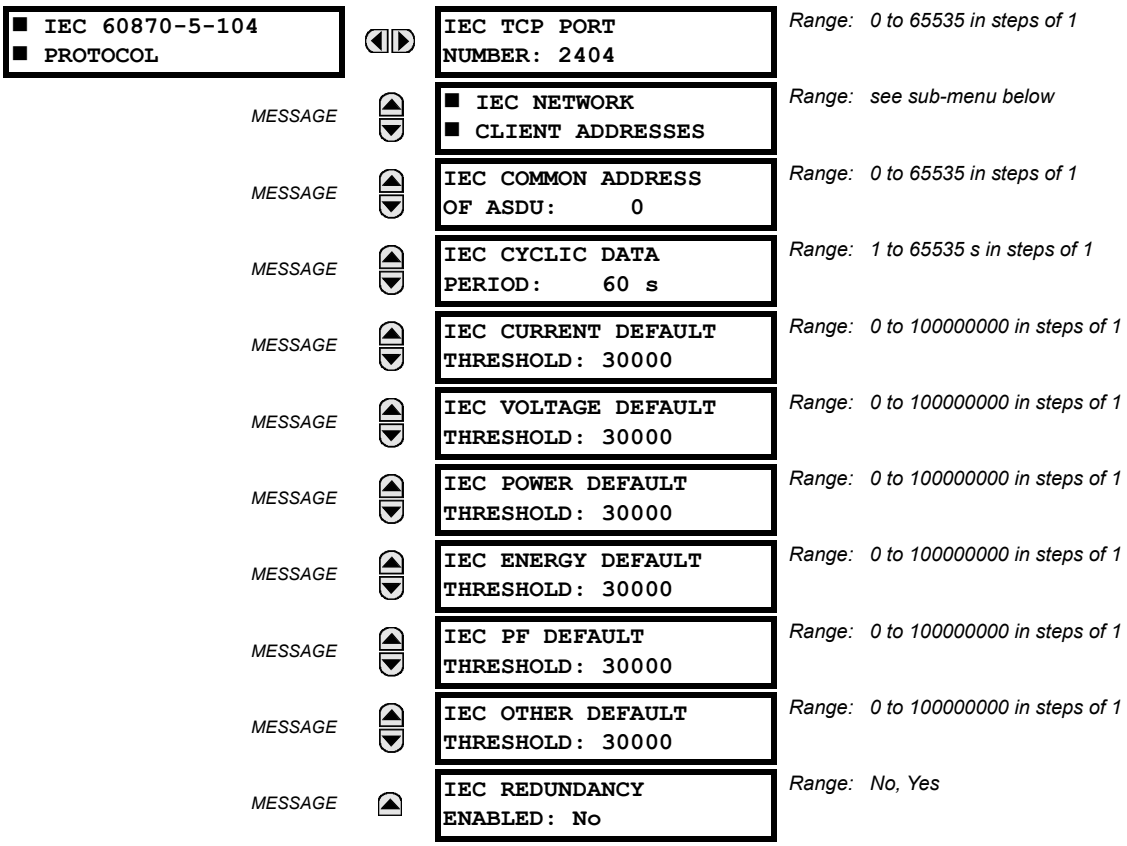

The G60 supports the IEC 60870-5-104 protocol. This protocol is enabled when the SETTINGS ⇨ PRODUCT SETUP ⇨⇩ COMMUNICATIONS ⇨ PROTOCOL setting is set to IEC 60870-5-104. The G60 can be used as an IEC 60870-5-104 slave device connected to a maximum of two masters (usually either an RTU or a SCADA master station). Since the G60 maintains two sets of IEC 60870-5-104 data change buffers, no more than two masters should actively communicate with the G60 at one time.

The **IEC ------- DEFAULT THRESHOLD** settings are used to determine when to trigger spontaneous responses containing M_ME_NC_1 analog data. These settings group the G60 analog data into types: current, voltage, power, energy, and other. Each setting represents the default threshold value for all M_ME_NC_1 analog points of that type. For example, to trigger spontaneous responses from the G60 when any current values change by 15 A, the **IEC CURRENT DEFAULT THRESHOLD** setting should be set to 15. Note that these settings are the default values of the deadbands. P_ME_NC_1 (parameter of measured value, short floating point value) points can be used to change threshold values, from the default, for each individual M_ME_NC_1 analog point. Whenever power is removed and re-applied to the G60, the default thresholds are in effect.

The **IEC REDUNDANCY** setting decides whether multiple client connections are accepted or not. If redundancy is set to Yes, two simultaneous connections can be active at any given time.

IEC TCP PORT NUMBER: When set to 0, the change takes effect when the G60 is restarted.

IEC COMMON ADDRESS OF ASDU: The change takes effect when the G60 is restarted.

IEC CYCLIC DATA PERIOD: The change takes effect when the G60 is restarted.

NOTE

Do not set more than one protocol to the same TCP/UDP port number, as this results in unreliable operation of those protocols.

PATH: SETTINGS ⇨ PRODUCT SETUP ⇨⇩ COMMUNICATIONS ⇨⇩ IEC 60870-5-104 PROTOCOL ⇨⇩ IEC NETWORK CLIENT ADDRESSES

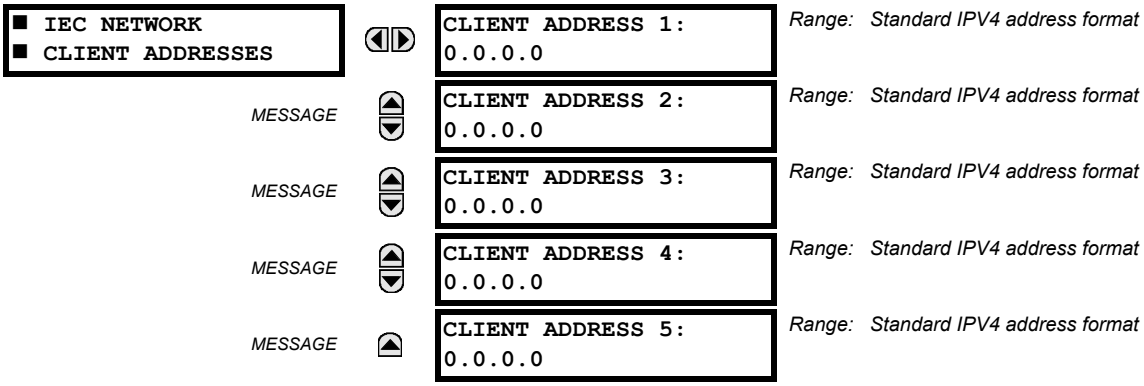

The G60 can specify a maximum of five clients for its IEC 104 connections. These are IP addresses for the controllers to which the G60 can connect.

A maximum of two simultaneous connections are supported at any given time.

p) EGD PROTOCOL

PATH: SETTINGS ⇨ PRODUCT SETUP ⇨⇩ COMMUNICATIONS ⇨⇩ EGD PROTOCOL

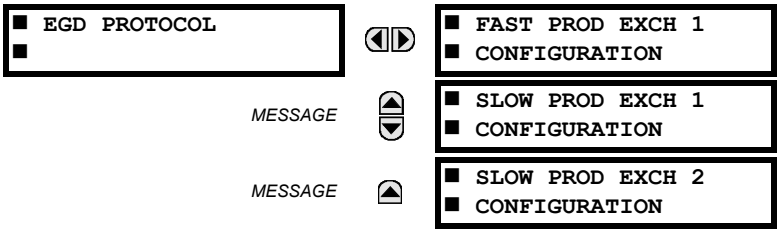

SOFTWARE OPTION

The G60 Generator Protection System is provided with optional Ethernet Global Data (EGD) communications capability. This feature is specified as a software option at the time of ordering. See the Order Codes section in chapter 2 for details.

The relay supports one fast Ethernet Global Data (EGD) exchange and two slow EGD exchanges. There are 20 data items in the fast-produced EGD exchange and 50 data items in each slow-produced exchange.

Ethernet Global Data (EGD) is a suite of protocols used for the real-time transfer of data for display and control purposes. The relay can be configured to 'produce' EGD data exchanges, and other devices can be configured to 'consume' EGD data exchanges. The number of produced exchanges (up to three), the data items in each exchange (up to 50), and the exchange production rate can be configured.

EGD cannot be used to transfer data between UR-series relays. The relay supports EGD production only. An EGD exchange will not be transmitted unless the destination address is non-zero, and at least the first data item address is set to a valid Modbus register address. Note that the default setting value of "0" is considered invalid.

The settings menu for the fast EGD exchange is shown below:

PATH: SETTINGS ⇨ PRODUCT SETUP ⇨⇩ COMMUNICATIONS ⇨⇩ EGD PROTOCOL ⇨ FAST PROD EXCH 1 CONFIGURATION

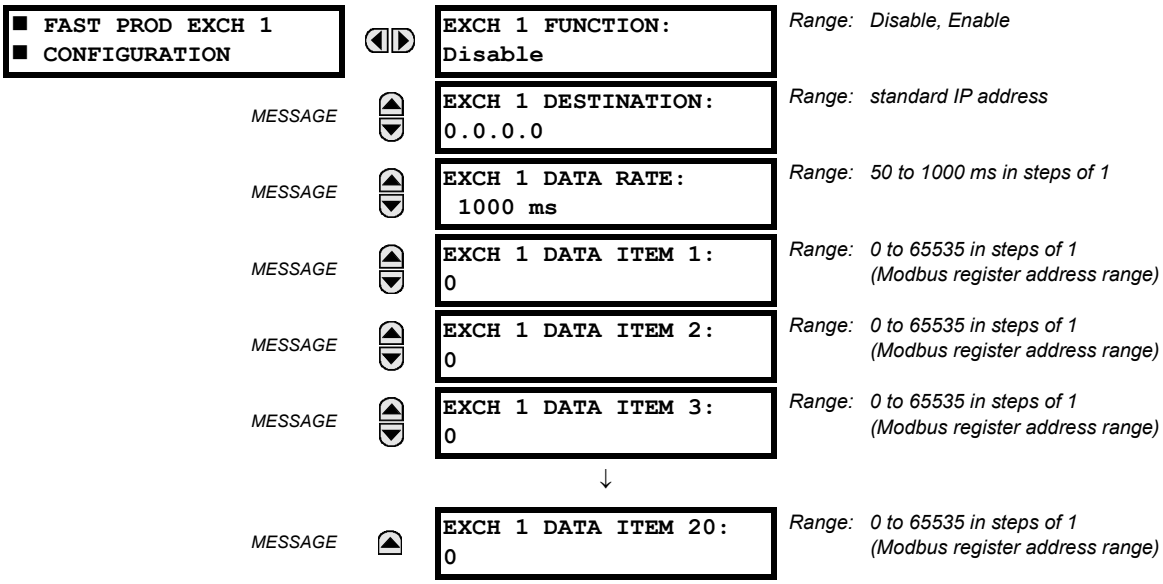

Fast exchanges (50 to 1000 ms) are generally used in control schemes. The G60 has one fast exchange (exchange 1) and two slow exchanges (exchange 2 and 3).

The settings menu for the slow EGD exchanges is shown below:

PATH: SETTINGS ⇨ PRODUCT SETUP ⇨⇩ COMMUNICATIONS ⇨⇩ EGD PROTOCOL ⇨ SLOW PROD EXCH 1(2) CONFIGURATION

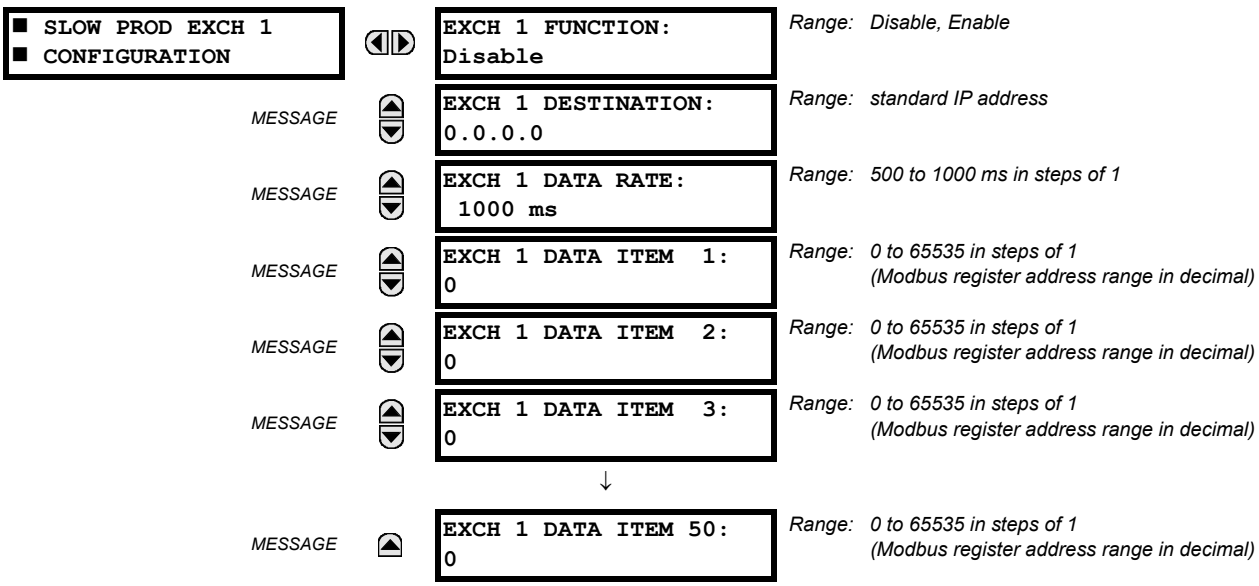

Slow EGD exchanges (500 to 1000 ms) are generally used for the transfer and display of data items. The settings for the fast and slow exchanges are described below:

- **EXCH 1 DESTINATION**: This setting specifies the destination IP address of the produced EGD exchange. This is usually unicast or broadcast.
- **EXCH 1 DATA RATE**: This setting specifies the rate at which this EGD exchange is transmitted. If the setting is 50 ms, the exchange data will be updated and sent once every 50 ms. If the setting is 1000 ms, the exchange data will be updated and sent once per second. EGD exchange 1 has a setting range of 50 to 1000 ms. Exchanges 2 and 3 have a setting range of 500 to 1000 ms.
- **EXCH 1 DATA ITEM 1 to 20/50**: These settings specify the data items that are part of this EGD exchange. Almost any data from the G60 memory map can be configured to be included in an EGD exchange. The settings are the starting Modbus register address for the data item in decimal format. See Appendix B for the complete Modbus memory map. Note that the Modbus memory map displays shows addresses in hexadecimal format. as such, it will be necessary to convert these values to decimal format before entering them as values for these setpoints.

  To select a data item to be part of an exchange, it is only necessary to choose the starting Modbus address of the item. That is, for items occupying more than one Modbus register (for example, 32 bit integers and floating point values), only the first Modbus address is required. The EGD exchange configured with these settings contains the data items up to the first setting that contains a Modbus address with no data, or 0. That is, if the first three settings contain valid Modbus addresses and the fourth is 0, the produced EGD exchange will contain three data items.

q) IEC 60870-5-103 PROTOCOL

PATH: SETTINGS ⇨ PRODUCT SETUP ⇨⇩ COMMUNICATIONS ⇨⇩ IEC 60870-5-103

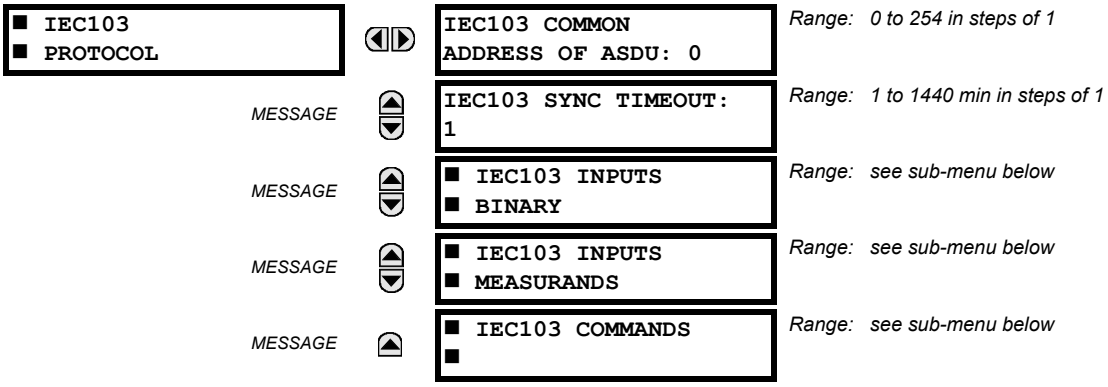

The G60 is provided with optional IEC 60870-5-103 communications capability. This feature is specified as a software option at the time of ordering. See the *Order Codes* section in chapter 2 for details.

The IEC 60870-5-103 protocol is enabled when the **SETTINGS ⇨ PRODUCT SETUP ⇨⇩ COMMUNICATIONS ⇨ PROTOCOL** setting is set to IEC 60870-5-103.

IEC103 COMMON ADDRESS OF ASDU: This setting uniquely defines this G60 on the serial line. Select an ID between 0 and 254. This ID does not need to be in sequential order for all stations that communicate with a controller, but it is recommended. Note that RS485 only allows a maximum of 32 slave stations on a communication line, so the entire range of 254 addresses is never exhausted.

IEC103 SYNC TIMEOUT: This setting defines the time that the G60 waits for a synchronization message. The G60 synchronizes its clock using all available sources, with the source synching more frequently overwriting the time of the other sources. Since the synchronization message received from the IEC 60870-5-103 master is less frequent than IRIG-B, PTP, or SNTP, its time is overwritten by these three sources, if any of them is active. If the synchronization timeout occurs and none of IRIG-B, PTP, or SNTP is active, the G60 sets the invalid bit in the time stamp of a time-tagged message.

The settings for the remaining menus are outlined as follows.

PATH: SETTINGS ⇨ PRODUCT SETUP ⇨⇩ COMMUNICATIONS ⇨⇩ IEC60870-5-103 ⇨ IEC103 INPUTS BINARY

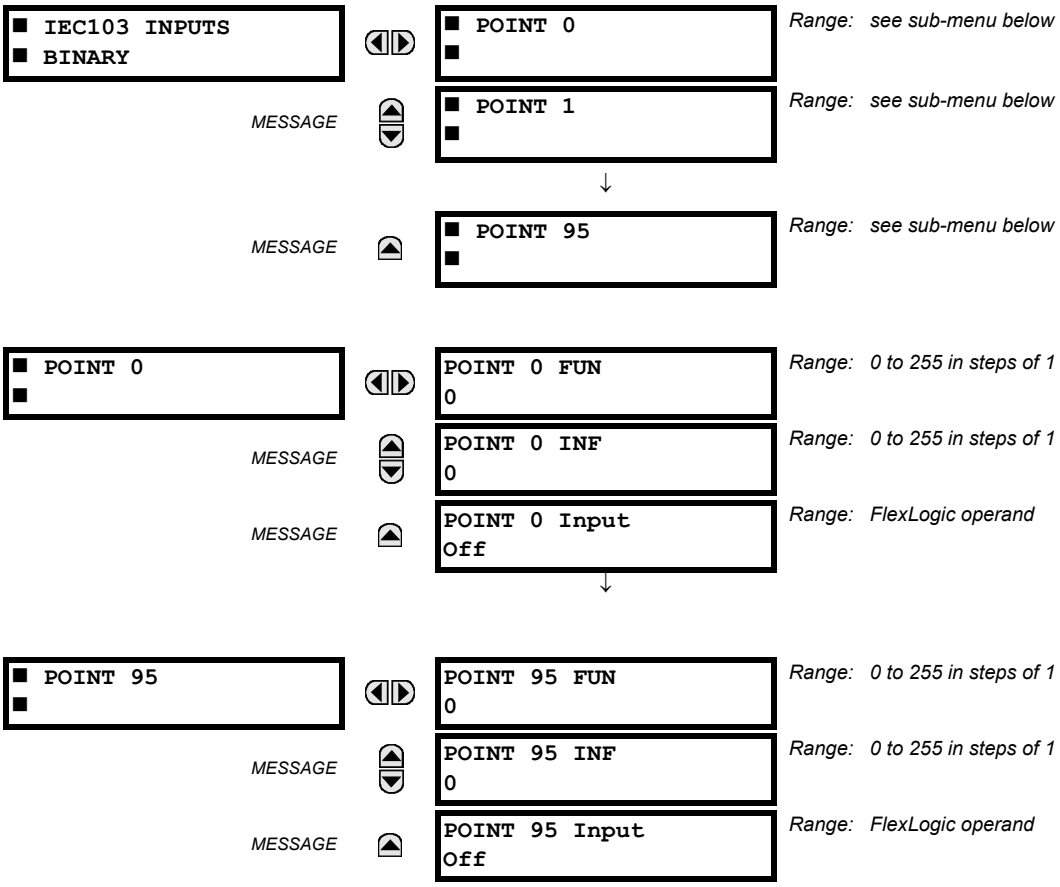

The binary input points are mapped using elements from a list of possible FlexLogic operands. A maximum of 96 binary inputs (points) can be mapped this way.

The IEC60870-5-103 point list always starts with point 0 and ends at the first "Off" value. Since the IEC 60870-5-103 point list must be in a continuous block, any points assigned after the first "Off" point are ignored.

For each defined point, set appropriate values for the Function Type (FUN) and Information Number (INF), which form the Information Object Identifier field of the ASDU, as defined in IEC60870-5-103.

The binary input points are sent as Class 1 data. They are sent either as a response to a general interrogation received from the controller or reported spontaneously. Spontaneous transmission occurs as a response to cyclic Class 2 requests. If the G60 wants to transmit Class 1 data at that time, it demands access for Class 1 data transmission (ACD=1 in the control field of the response).

For any change to take effect, restart the relay.

PATH: SETTINGS ⇨ PRODUCT SETUP ⇨⇩ COMMUNICATIONS ⇨⇩ IEC60870-5-103 ⇨ IEC103 INPUTS MEASURANDS

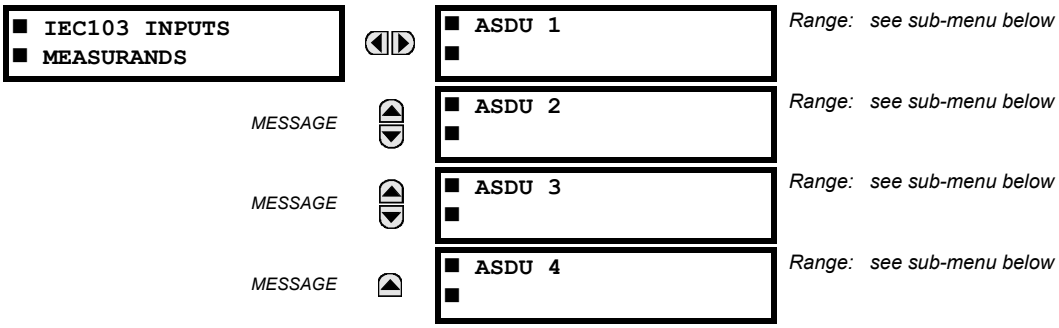

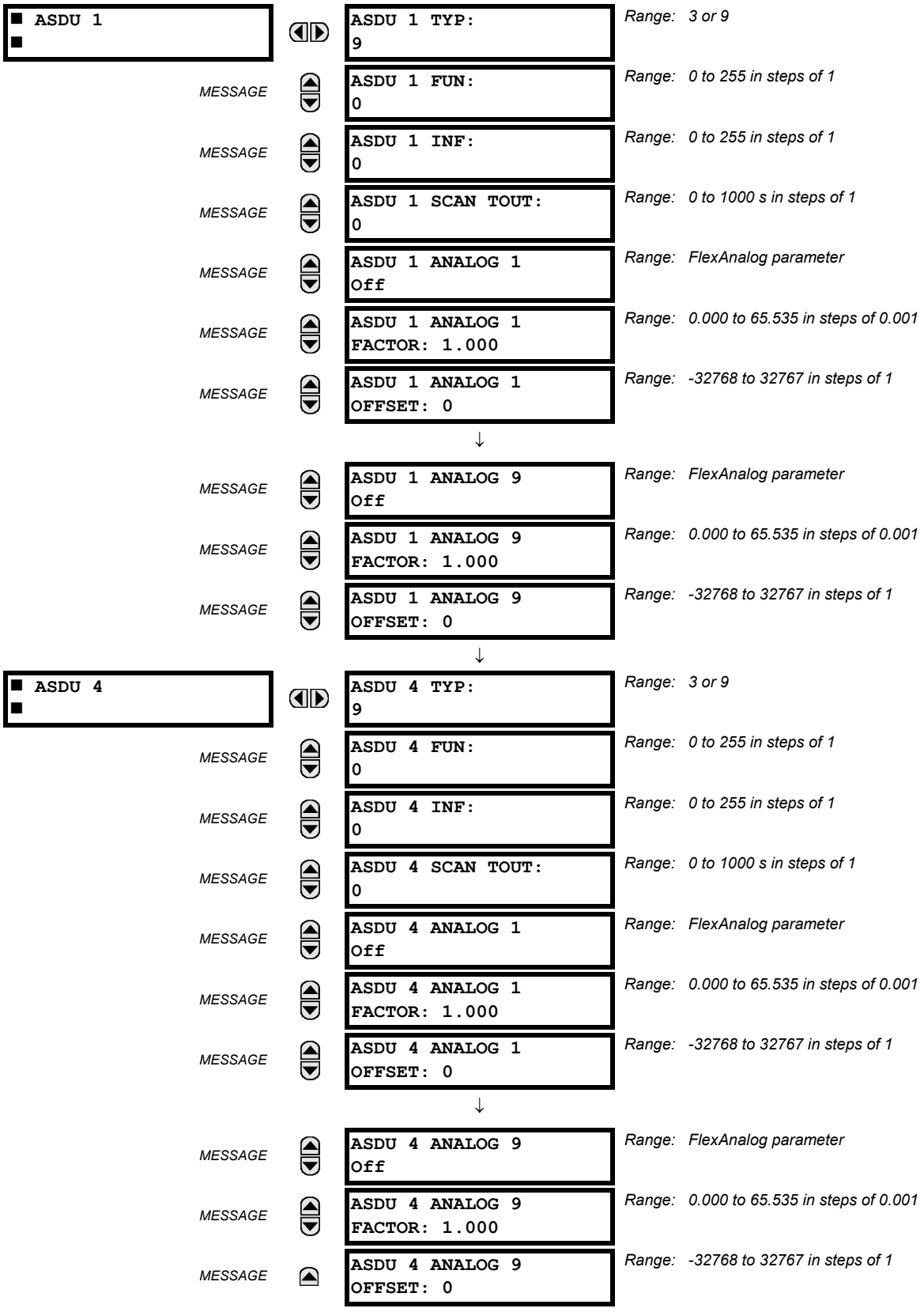
ASDU 1
ASDU 1 TYP: 9
Range: 3 or 9
MESSAGE
ASDU 1 FUN: 0
Range: 0 to 255 in steps of 1
MESSAGE
ASDU 1 INF: 0
Range: 0 to 255 in steps of 1
MESSAGE
ASDU 1 SCAN TOUT: 0
Range: 0 to 1000 s in steps of 1
MESSAGE
ASDU 1 ANALOG 1 Off
Range: FlexAnalog parameter
MESSAGE
ASDU 1 ANALOG 1 FACTOR: 1.000
Range: 0.000 to 65.535 in steps of 0.001
MESSAGE
ASDU 1 ANALOG 1 OFFSET: 0
Range: -32768 to 32767 in steps of 1
MESSAGE
ASDU 1 ANALOG 9 Off
Range: FlexAnalog parameter
MESSAGE
ASDU 1 ANALOG 9 FACTOR: 1.000
Range: 0.000 to 65.535 in steps of 0.001
MESSAGE
ASDU 1 ANALOG 9 OFFSET: 0
Range: -32768 to 32767 in steps of 1
ASDU 4
ASDU 4 TYP: 9
Range: 3 or 9
MESSAGE
ASDU 4 FUN: 0
Range: 0 to 255 in steps of 1
MESSAGE
ASDU 4 INF: 0
Range: 0 to 255 in steps of 1
MESSAGE
ASDU 4 SCAN TOUT: 0
Range: 0 to 1000 s in steps of 1
MESSAGE
ASDU 4 ANALOG 1 Off
Range: FlexAnalog parameter
MESSAGE
ASDU 4 ANALOG 1 FACTOR: 1.000
Range: 0.000 to 65.535 in steps of 0.001
MESSAGE
ASDU 4 ANALOG 1 OFFSET: 0
Range: -32768 to 32767 in steps of 1
MESSAGE
ASDU 4 ANALOG 9 Off
Range: FlexAnalog parameter
MESSAGE
ASDU 4 ANALOG 9 FACTOR: 1.000
Range: 0.000 to 65.535 in steps of 0.001
MESSAGE
ASDU 4 ANALOG 9 OFFSET: 0
Range: -32768 to 32767 in steps of 1

The configuration menu allows a maximum of four ASDUs containing measurands.

Measurands are sent as a response to Class 2 requests, which are cyclic requests coming from the master.

TYPE IDENTIFICATION (TYP): The configuration field TYP indicates how many measurands are present in the corresponding ASDU. Each ASDU can take either 4 or 9 measurands maximum, depending on the type identification (3 respectively 9). For any change to take effect, restart the relay.

FUNCTION TYPE (FUN) AND INFORMATION NUMBER (INF): These two fields form the Information Object Identifier of the ASDU as defined in IEC60870-103. For any change to take effect, restart the relay.

SCAN TIMEOUT (SCAN TOUT): This is the cyclic period used by the G60 to decide when a measurand ASDU is included in a response. The measurand is sent as response to a Class 2 request when the corresponding timeout expires. The default value 0 means 500 ms.

ANALOG #: This field contains the actual measurand to be sent in the response to the master. The measurands can be mapped using elements from a list of FlexAnalog operands. The measurands sent are voltage, current, power, power factor, and frequency. If any other FlexAnalog is chosen, the G60 sends 0 instead of its value. Note that the power is transmitted in KW, not W. Measurands are transmitted as ASDU 3 or ASDU 9 (type identification value set to measurands I, respectively measurands II).

Each IEC60870-5-103 measurands list ends at the first unconfigured ("Off") value. Any measurand assigned after the first "Off" value is ignored.

At least one measurand per ASDU must be configured in order to configure the following ASDU. For example, the user can configure only one measurand for each ASDU, but the user is not allowed to skip ASDU2 and configure measurands in ASDU3.

For any change to take effect, restart the relay.

ANALOG # FACTOR AND OFFSET: For each measurand included in the ASDU, a factor and offset can also be configured. The factor and offset allow for scaling to be performed on measurands. The final measurement sent to the IEC60870-103 master is then "a*x + b", where x is the measurand, a is the multiplying factor and b is the offset. The master has to perform the reversed operation in order to retrieve the actual value if such scaling is done. By default a = 1 and b = 0, so no scaling is done if these values are left at their defaults. Examples of when scaling is appropriate are as follows:

- If the measured value contains decimals and it is important to preserve the resolution. Since the format for transmitting the measurand does not permit decimals, a factor a>1 can be applied before transmission. For example, a frequency F=59.9Hz can be transmitted as Ft = 10 * F = 10 * 59.9 = 599. In this case a = 10, b = 0. The master receives 599 and has to divide by 10 to retrieve the real value 59.9.
- If the measured value is larger than what fits in the format defined in IEC103. The format defined in the standard allows for signed integers up to 4095. By offsetting, unsigned integers up to 4096 + 4095 = 8191 are supported. Scaling using factors <1 can be required in such cases. The calculation is outlined in the IEC60870-5-103 appendix. Two examples follow, where you decide factors a and b.

  Example 1: Nominal power Pn = 100MW = 100000KW (power is transmitted in KW)

  Since P can be both positive and negative:

  Transmitted power Pt = (4095/(Pn*2.4)) * P = (4095/(100000 * 2.4)) * P

  = 0.017 * P

  a = 0.017

  b = 0

  Pt = 0.017 * P

  For a max power 100000KW * 2.4 = 240000KW, we transmit

  Pt = 0.017 * 240000 = 4080

  A value above 240 MW is indicated by overflow.

  Example 2: Nominal voltage Vn = 500000V

  Since RMS voltage V can be only positive:

Transmitted voltage Vt = (8191/(Vn*2.4)) * V - 4096 =

= (8191/(500000 * 2.4)) * V - 4096 = 0.0068 * V - 4096

a = 0.0068

Since the step is in increments of 0.001, we round it at:

a = 0.006

b = -4096

Vt = 0.006 * V - 4096

For max voltage 500000V * 2.4 = 1200000V, we transmit

Vt = 0.006 * 1200000 - 4096 = 7200 - 4096 = 3104

PATH: SETTINGS ⇨ PRODUCT SETUP ⇨⇩ COMMUNICATIONS ⇨⇩ IEC60870-5-103 ⇨ IEC103 COMMANDS

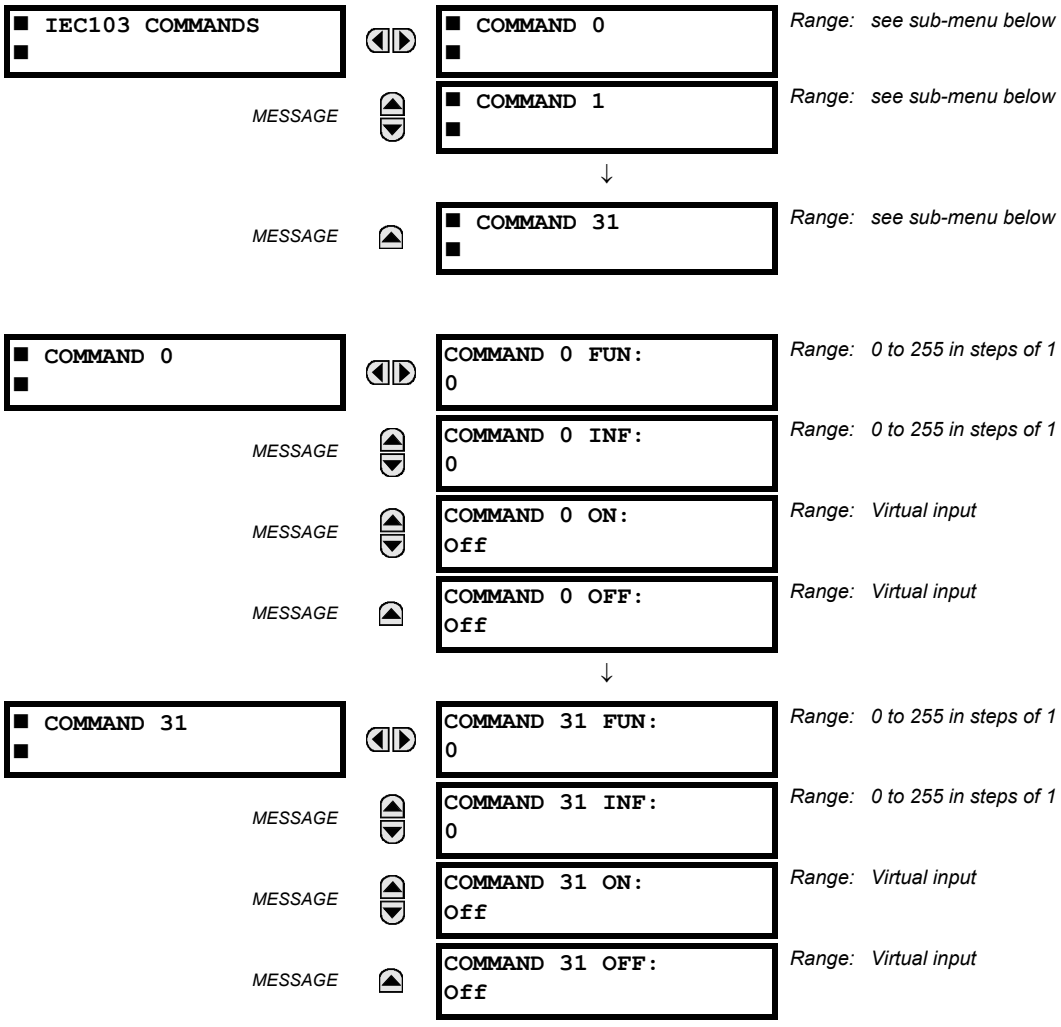

Commands are received as General Command (Type Identification 20). The user can configure which action to perform when an ASDU command comes.

A list of available mappings is provided on the G60. This includes 64 virtual inputs (see the following table). The ON and OFF for the same ASDU command can be mapped to different virtual inputs.

Each command is identified by the unique combination made by the function type (FUN), and information number (INF). If the master sends an ASDU command that does not have the FUN and INF of any configured command, the relay rejects it.

Table 5–8: COMMANDS MAPPING TABLE

DESCRIPTION	VALUE
Off	0
Virtual Input 1	1
Virtual Input 2	2
...	
Virtual Input 64	64

For any change to take effect, restart the relay.

5.2.5 MODBUS USER MAP

PATH: SETTINGS ⇨ PRODUCT SETUP ⇨⇩ MODBUS USER MAP

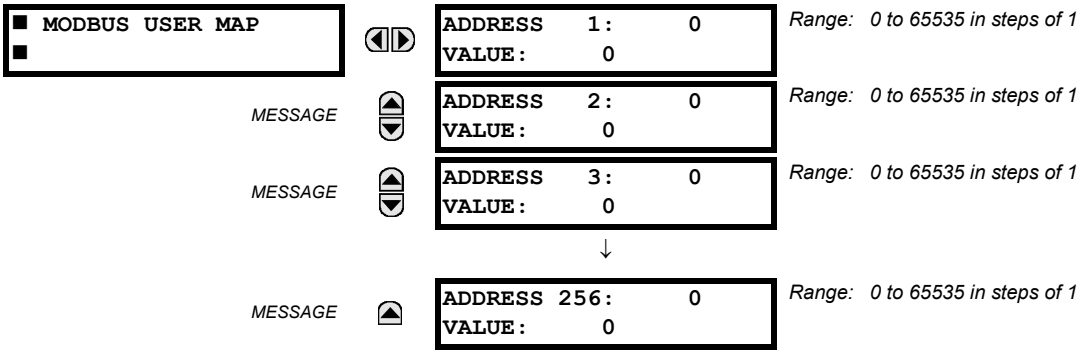

The Modbus user map provides read-only access for up to 256 registers. To obtain a memory map value, enter the desired address in the **ADDRESS** line (converted from hex to decimal format). The corresponding value displays in the **VALUE** line. A value of "0" in subsequent register **ADDRESS** lines automatically returns values for the previous **ADDRESS** lines incremented by "1". An address value of "0" in the initial register means "none" and values of "0" display for all registers. Different **ADDRESS** values can be entered as required in any of the register positions.

5.2.6 REAL TIME CLOCK

a) MAIN MENU

PATH: SETTINGS ⇨ PRODUCT SETUP ⇨⇩ REAL TIME CLOCK

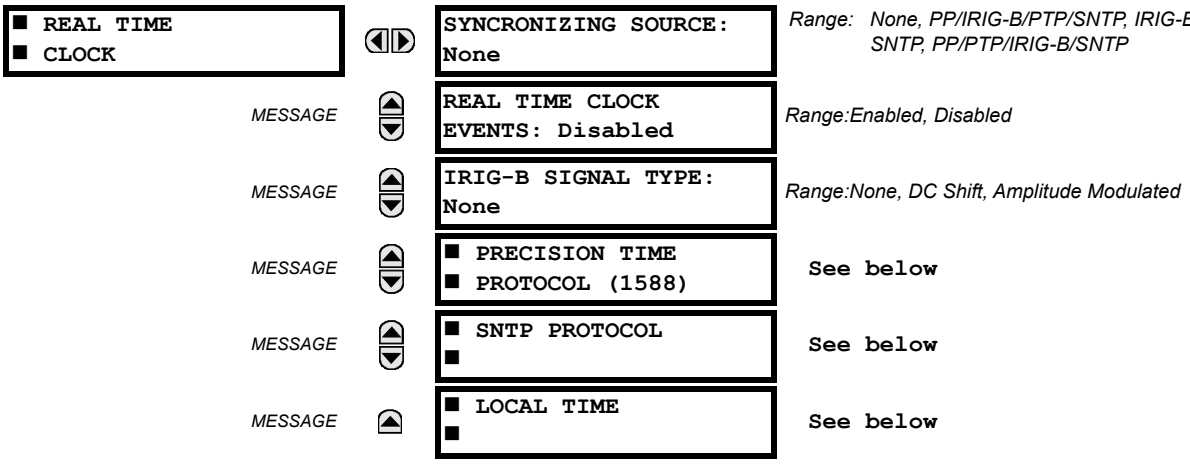

The relay contains a real time clock (RTC) to create timestamps for communications protocols as well as for historical data, such as event records and oscillography. When the relay restarts, the RTC initializes from an onboard battery-backed clock, which has the same accuracy as an electronic watch, approximately ±1 minute per month (~23 ppm). Once the RTC is synchronized with the Precision Time Protocol (PTP), IRIG-B, or SNTP, its accuracy approaches that of the synchroniz-

ing time delivered to the relay. While the RTC is not synchronized via PTP or IRIG-B, or the relay determines than it has an offset possibly greater than 10 µs from the international time standard, the CLOCK UNSYNCHRONIZED FlexLogic operand is activated.

The **SYNCHRONIZING SOURCE** setting displays when the relay includes the IEEE 1588 software option. The setting configures the priority sequence of the time synchronization source, to determine which of the available external time sources to use for time synchronization. A setting of None causes the RTC and the synchrophasor clock to free-run until the clock is changed from the front panel or from communications protocols. A setting of PP/IRIG-B/PTP/SNTP, IRIG-B/PP/PTP/SNTP, or PP/PTP/IRIG-B/SNTP causes the relay to track the first source named that is enabled and operational, or free-run if none of these are available. Here, PP means a time source that is strictly compliant with PP, and PTP means a time source that is not strictly compliant with PP. When a time source fails or recovers, the relay automatically transfers synchronization as required by this setting.

When the relay does not have the IEEE 1588 software option and this setting does not display, it uses IRIG-B when enabled and operational, then failing that SNTP when configured and operational, and otherwise it free-runs unless the clock is changed from the front panel or from communications protocols.

Whenever a time synchronization message is received through any of the active protocols, the UR clock updates. However, given that IEC 60870-5-103, IEC 60870-5-104, Modbus, and DNP are low accuracy time synchronization methods, avoid their use for synchronization when better accuracy time protocols, such as IRIG-B and PTP, are active in the system.

See the **COMMANDS ⇨SET DATE AND TIME** menu section of this manual to manually set the RTC.

The **REAL TIME CLOCK EVENTS** setting allows changes to the date and/or time to be captured in the event record. The event records the RTC time before the adjustment. A Date/Time Changed event is generated when:

- The real time clock changed from SNTP/PTP/IRIG-B and the time difference is more than one second
- The real time clock changed from the front panel or via Modbus register. The relay always generates this event regardless of the time difference.
- The Daylight Saving Time (DST) setting gets enabled and the current relay time is already in the DST zone
- The real time clock enters or leaves DST

To enable IRIG-B synchronization, the input **IRIG-B SIGNAL TYPE** must be set to DC Shift or Amplitude Modulated. IRIG-B synchronization can be disabled by making this setting None. When IRIG-B is enabled and active, clock synchronization by communication protocols. (DNP, IEC 60870-5-103, IEC 60870-5-104) is blocked, and clock synchronization from the front panel and over Modbus is always enabled.

To configure and enable PTP and/or SNTP, or to set local time parameters (for example time zone, daylight savings), use the following sections.

b) PRECISION TIME PROTOCOL (1588)

PATH: SETTINGS ⇨ PRODUCT SETUP ⇨⇩ REAL TIME CLOCK ⇨⇩ PRECISION TIME PROTOCOL (1588)

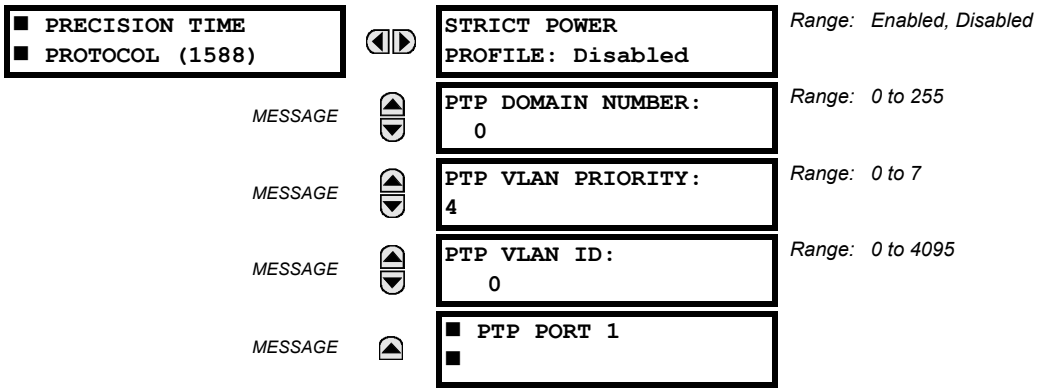

PATH: SETTINGS ⇨ PRODUCT SETUP ⇨⇩ REAL TIME CLOCK ⇨⇩ PRECISION TIME PROTOCOL (1588) ⇨⇩ PTP PORT 1(3)

MESSAGE

```
PORT 1 PTP FUNCTION:
Disabled
```

Range: Enabled, Disabled

MESSAGE

```
PORT 1 PATH DELAY
ADDER:      0 ns
```

Range: 0 to 60 000 ns in steps of 1

MESSAGE

```
PORT 1 PATH DELAY
ASYMMETRY:      0 ns
```

Range: –1 000 to +1 000 ns in steps of 1

The UR supports the Precision Time Protocol (PTP) specified in IEEE Std 1588 2008 using the Power Profile (PP) specified in IEEE Std C37.238 2011. This enables the relay to synchronize to the international time standard over an Ethernet network that implements PP.

The relay can be configured to operate on some PTP networks that are not strictly PP. Time accuracy can be less than specified for a PP network. Tolerated deviations from strict PP include 1) missing declaration of PP compliance in the messages, 2) connection to a network device that does not support the PTP peer delay mechanism, 3) jitter substantially greater than 1 µs in received event messages, and 4) certain non-compliant announce and sync message update rates.

NOTE

The relay implements PTP according to IEEE Std 1588 2008 and the equivalent IEC 61588:2009(E), sometimes referred to as version 2 PTP. It does not support the previous version of the standard (version 1).

PTP is a protocol that allows multiple clocks in a network to synchronize with one another. It permits synchronization accuracies better than 1 ns, but this requires each and every component in the network achieve very high levels of accuracy and a very high baud rate, faster than normally used for relay communications. When operating over a generic Ethernet network, time error may amount to 1 ms or more. PP is a profile of PTP which specifies a limited subset of PTP suitable for use in power system protection, control, automation and data communication applications, and thereby facilitates interoperability between different vendor's clocks and switches. PP specifies a worst-case delivered time error of less than 1 µs over a 16-hop network.

In a PTP system and in a PP system, the clocks automatically organize themselves into a master-slave synchronization hierarchy with the "best" clock available making itself the "grandmaster" at the top of the hierarchy; all others make themselves "slaves" and track the grandmaster. Typically the grandmaster clock receives its time from GPS satellites or some other link to the international time standard. If the grandmaster fails, the next "best" clock available in the domain assumes the grandmaster role. Should a clock on starting up discover it is "better" that the present grandmaster, it assumes the grandmaster role and the previous grandmaster reverts to slave. The G60 qualification mechanism accepts a potential master clock as a new grandmaster, when in a four-second interval it has received three announce messages from it, all better than the present grandmaster clock and better than any other announce in this interval.

Time messages issued by the grandmaster are delayed as they pass through the network both due to the finite speed of the signal in the interconnecting fiber or wire, and due to processing delays in the Ethernet switches. Each clock and switch implementing PP measures the propagation delay to each of its PP neighbors, and compensates for these delays in the time received. Each network device implementing PP measures the processing delay it introduces in each time message and compensates for this delay in the time it transmits. As a result, the time delivered to end-devices such as the UR are virtually identical to the grandmaster time. Should one of the network devices in the hierarchy not fully implement PP, the associated propagation delay and/or latency may not be compensated for, and the time received at the end-device could be in error by more than 100 µs.

See the **Settings > Product Setup > Real Time Clock** section of this manual for a description of when time values received via PTP are used to update the relay's real time clock.

The following settings are available for configuring the relay for PTP.

STRICT POWER PROFILE

- Power profile (IEEE Std C37.238 2011) requires that the relay only select as a grandmaster power profile compliant clocks, that the delivered time have worst-case error of ±1 µs, and that the peer delay mechanism be implemented. With the strict power profile setting enabled, the relay will only select as master clocks displaying the IEEE_C37_238 identification codes. It will use a port only when the peer delay mechanism is operational. With the strict power profile setting disabled, the relay will use clocks without the power profile identification when no power profile clocks are present, and will use ports even if the peer delay mechanism is non-operational.
- This setting applies to all of the relay's PTP capable ports.

PTP DOMAIN NUMBER

- This setting should be set to the domain number of the grandmaster-capable clock(s) to be synchronized to. A network may support multiple time distribution domains, each distinguished with a unique domain number. More commonly, there is a single domain using the default domain number zero.
- This setting applies to all of the relay's PTP capable ports.

PTP VLAN PRIORITY

- This setting selects the value of the priority field in the 802.1Q VLAN tag in request messages issued by the relay's peer delay mechanism. In compliance with PP the default VLAN priority is 4, but it is recommended that in accordance with PTP it be set to 7.
- Depending on the characteristics of the device to which the relay is directly linked, VLAN Priority may have no effect.
- This setting applies to all of the relay's PTP capable ports.

PTP VLAN ID

- This setting selects the value of the ID field in the 802.1Q VLAN tag in request messages issued by the relay's peer delay mechanism. It is provided in compliance with PP. As these messages have a destination address that indicates they are not to be bridged, their VLAN ID serves no function, and so may be left at its default value.
- Depending on the characteristics of the device to which the relay is directly linked, VLAN ID may have no effect.
- This setting applies to all of the relay's PTP capable ports.

PORT 1 ... 3 FUNCTION

- While this port setting is selected to disabled, PTP is disabled on this port. The relay does not generate or listen to PTP messages on this port.

PORT 1 ... 3 PATH DELAY ADDER

- The time delivered by PTP is advanced by the time value in this setting prior to the time being used to synchronize the relay's real time clock. This is to compensate to the extent practical for time delivery delays not compensated for in the network. In a fully compliant PP network, the peer delay and the processing delay mechanisms compensate for all the delays between the grandmaster and the relay. In such networks, this setting should be zero.
- In networks containing one or more switches and/or clocks that do not implement both of these mechanisms, not all delays are compensated, so the time of message arrival at the relay will be later than the time indicated in the message. This setting can be used to approximately compensate for this delay. However, as the relay is not aware of network switching that dynamically changes the amount of uncompensated delay, there is no setting that will always completely correct for uncompensated delay. A setting can be chosen that will reduce worst-case error to half of the range between minimum and maximum uncompensated delay, if these values are known.

PORT 1 ... 3 PATH DELAY ASYMMETRY

- This setting corresponds to "delayAsymmetry" in PTP, which is used by the peer delay mechanism to compensate for any difference in the propagation delay between the two directions of a link. Except in unusual cases, the two fibers are of essentially identical length and composition, so this setting should be set to zero.
- In unusual cases where the length of the link is different in different directions, this setting should be set to the number of nanoseconds the Ethernet propagation delay to the relay is longer than the mean of path propagation delays to and from the relay. For instance, if it is known say from the physical length of the fibers and the propagation speed in the fibers that the delay from the relay to the Ethernet switch it is connected to is 9 000 ns and the that the delay from the switch to the relay is 11 000 ns, then the mean delay is 10 000 ns, and the path delay asymmetry is 11000 - 10000 = +1000 ns.

c) SNTP PROTOCOL

PATH: SETTINGS ⇨ PRODUCT SETUP ⇨⇩ REAL TIME CLOCK ⇨⇩ SNTP PROTOCOL

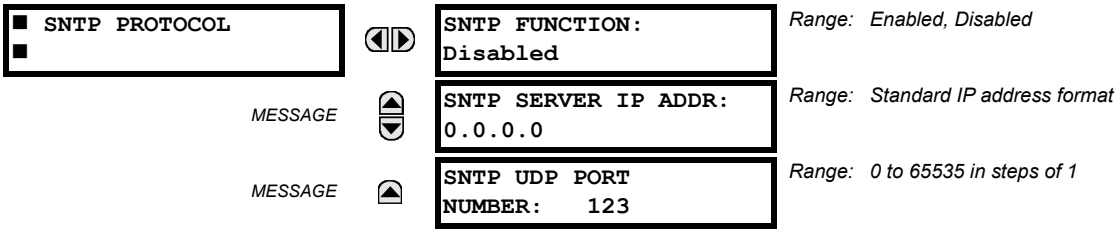

The G60 supports the Simple Network Time Protocol specified in RFC-2030. With SNTP, the G60 can obtain clock time over an Ethernet network. The G60 acts as an SNTP client to receive time values from an SNTP/NTP server, usually a dedicated product using a GPS receiver to provide an accurate time. UR series relays support unicast, broadcast, multicast, and anycast SNTP functionality.

The **SNTP FUNCTION** setting enables or disabled the SNTP feature on the G60.

To use SNTP in unicast mode, **SNTP SERVER IP ADDR** must be set to the SNTP/NTP server IP address. Once this address is set and **SNTP FUNCTION** is "Enabled," the G60 attempts to obtain time values from the SNTP/NTP server. Since many time values are obtained and averaged, it generally takes three to four minutes until the G60 clock is closely synchronized with the SNTP/NTP server. It takes up to two minutes for the G60 to signal an SNTP self-test error if the server is offline.

To use SNTP in broadcast mode, set the **SNTP SERVER IP ADDR** setting to "0.0.0.0" and **SNTP FUNCTION** to "Enabled." The G60 then listens to SNTP messages sent to the "all ones" broadcast address for the subnet. The G60 waits up to 18 minutes (>1024 seconds) without receiving an SNTP broadcast message before signaling an SNTP self-test error.

The **SNTP UDP PORT NUMBER** is 123 for normal SNTP operation. If SNTP is not required, close the port by setting it to 0.

NOTE When the **SNTP UDP PORT NUMBER** is set to 0, the change takes effect when the G60 is restarted.

d) LOCAL TIME

PATH: SETTINGS ⇨ PRODUCT SETUP ⇨⇩ REAL TIME CLOCK ⇨⇩ LOCAL TIME

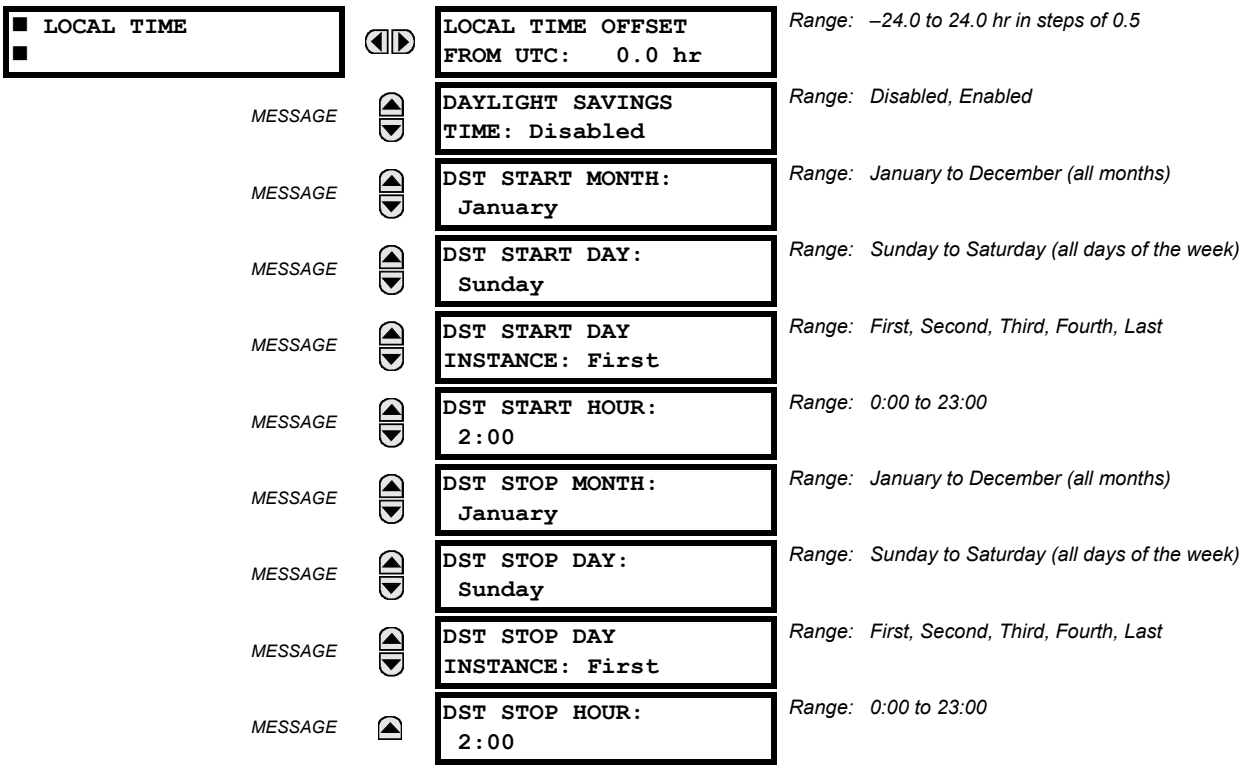

The UR device maintains two times: local time and Universal Coordinated Time (UTC). Local time can be provided by IRIG-B signals. UTC time is provided by SNTP servers.

The real-time clock (RTC) and time stamps reported in historical records and communication protocols can be incorrect if the Local Time settings are not configured properly.

See the IRIG-B section in the Installation chapter for guidance on these settings when using an IRIG-B source that sets the IRIG-B control bits according to IEEE Std 1344-1995.

The **LOCAL TIME OFFSET FROM UTC** setting is used to specify the local time zone offset from UTC (Greenwich Mean Time) in hours. Time zones in the eastern hemisphere have positive values; time zones in the western hemisphere have negative values. A value of zero causes the relay to use UTC for local time. This setting has two uses. When the system RTC is synchronized with a communications protocol providing only local time or it is free-running, the offset setting is used to calculate UTC from the local time these provide. When the RTC is synchronized with a communications protocol providing only UTC (such as PTP or SNTP), the time offset setting is used to determine local time from the UTC provided. PTP ALTERNATE_TIME_OFFSET_INDICATOR TLVs are not used to calculate local time.

The **DAYLIGHT SAVINGS TIME (DST)** settings can be used to allow the relay to follow the DST rules of the local time zone. Note that when IRIG-B time synchronization is active, the local time in the IRIG-B signal contains any daylight savings time offset and so the DST settings are ignored. Note that the following items do not include the DST: Time of Day Timer Start Time; Time of Day Timer Stop Time; Event Recorder Last Cleared Date; Source x Demand VAR Maximum Date; Source x Demand WATT Maximum Date; Source x Demand VA Maximum Date; Source x Demand Ia Maximum Date; Source x Demand Ib Maximum Date; Source x Demand Ic Maximum Date; PMU x Last Cleared Date; PMU One-Shot Time; Data Logger Newest Time; Data Logger Oldest Time; Oscillography Last Cleared Date; Last Settings Change Date; User Programmable Fault Report Cleared Date; Digital Counter x Frozen Time Stamp; HIZ RMS Capture x Time; and HIZ Capture x Time.

5.2.7 USER-PROGRAMMABLE FAULT REPORTS

PATH: SETTINGS ⇨ PRODUCT SETUP ⇨⇩ USER-PROGRAMMABLE FAULT REPORTS ⇨ USER-PROGRAMMABLE FAULT REPORT 1(2)

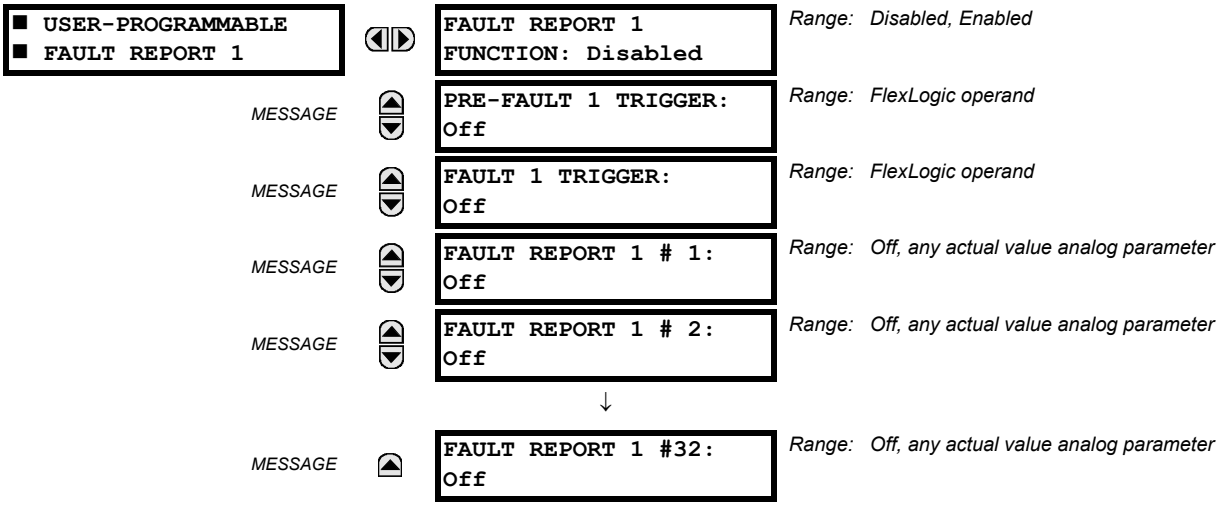

When enabled, this function monitors the pre-fault trigger. The pre-fault data are stored in the memory for prospective creation of the fault report on the rising edge of the pre-fault trigger. The element waits for the fault trigger as long as the pre-fault trigger is asserted, but not shorter than 1 second. When the fault trigger occurs, the fault data is stored and the complete report is created. If the fault trigger does not occur within 1 second after the pre-fault trigger drops out, the element resets and no record is created.

The user programmable record contains the following information: the user-programmed relay name, detailed firmware revision (7.2x, for example) and relay model (G60), the date and time of trigger, the name of pre-fault trigger (a specific FlexLogic operand), the name of fault trigger (a specific FlexLogic operand), the active setting group at pre-fault trigger, the active setting group at fault trigger, pre-fault values of all programmed analog channels (one cycle before pre-fault trigger), and fault values of all programmed analog channels (at the fault trigger).

Each fault report is stored as a file to a maximum capacity of ten files. An eleventh trigger overwrites the oldest file. The EnerVista UR Setup software is required to view all captured data. A FAULT RPT TRIG event is automatically created when the report is triggered.

The relay includes two user-programmable fault reports to enable capture of two types of trips (for example, trip from thermal protection with the report configured to include temperatures, and short-circuit trip with the report configured to include voltages and currents). Both reports feed the same report file queue.

The last record is available as individual data items via communications protocols.

- **PRE-FAULT 1 TRIGGER:** Specifies the FlexLogic operand to capture the pre-fault data. The rising edge of this operand stores one cycle-old data for subsequent reporting. The element waits for the fault trigger to actually create a record as long as the operand selected as **PRE-FAULT 1 TRIGGER** is "On". If the operand remains "Off" for 1 second, the element resets and no record is created.
- **FAULT 1 TRIGGER:** Specifies the FlexLogic operand to capture the fault data. The rising edge of this operand stores the data as fault data and results in a new report. The trigger (not the pre-fault trigger) controls the date and time of the report.
- **FAULT REPORT 1 # 1** to **FAULT REPORT 1 #32:** These settings specify an actual value such as voltage or current magnitude, true RMS, phase angle, frequency, temperature, etc., to be stored should the report be created. Up to 32 channels can be configured. Two reports are configurable to cope with variety of trip conditions and items of interest.

5.2.8 OSCILLOGRAPHY

a) MAIN MENU

PATH: SETTINGS ⇨ PRODUCT SETUP ⇨⇩ OSCILLOGRAPHY

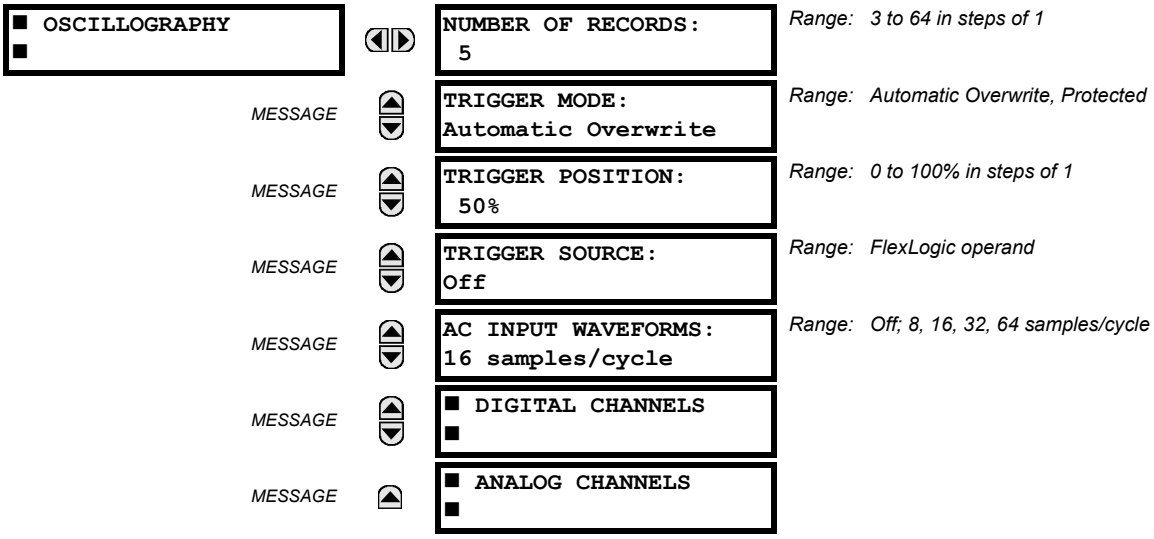

Oscillography records contain waveforms captured at the sampling rate as well as other relay data at the point of trigger. Oscillography records are triggered by a programmable FlexLogic operand. Multiple oscillography records can be captured simultaneously.

The **NUMBER OF RECORDS** is selectable, but the number of cycles captured in a single record varies considerably based on other factors, such as sample rate and the number of operational modules. There is a fixed amount of data storage for oscillography; the more data captured, the less the number of cycles captured per record. See the **ACTUAL VALUES ⇨⇩ RECORDS ⇨⇩ OSCILLOGRAPHY** menu to view the number of cycles captured per record. The following table provides sample configurations with corresponding cycles/record. The minimum number of oscillographic records is three.

Table 5–9: OSCILLOGRAPHY CYCLES/RECORD EXAMPLE

RECORDS	CT/VTS	SAMPLE RATE	DIGITAL CHANNELS	ANALOG CHANNELS	CYCLES PER RECORD
3	1	32	32	16	2399
3	1	64	32	16	1450
16	1	32	32	16	666
16	1	64	32	16	402
32	1	32	32	16	352
32	1	64	32	16	213
3	2	32	32	16	1516
3	2	64	32	16	851
16	2	32	32	16	421

A new record can automatically overwrite an older record when **TRIGGER MODE** is set to "Automatic Overwrite."

Set the **TRIGGER POSITION** to a percentage of the total buffer size (for example, 10%, 50%, 75%, and so on). A trigger position of 25% consists of 25% pre- and 75% post-trigger data. The **TRIGGER SOURCE** is always captured in oscillography and can be any FlexLogic parameter (element state, contact input, virtual output, and so on). The relay sampling rate is 64 samples per cycle.

The **AC INPUT WAVEFORMS** setting determines the sampling rate at which AC input signals (that is, current and voltage) are stored. Reducing the sampling rate allows longer records to be stored. This setting has no effect on the internal sampling rate of the relay which is always 64 samples per cycle; that is, it has no effect on the fundamental calculations of the device.

NOTE When changes are made to the oscillography settings, all existing oscillography records are cleared.

b) DIGITAL CHANNELS

PATH: SETTINGS ⇨ PRODUCT SETUP ⇨⇩ OSCILLOGRAPHY ⇨⇩ DIGITAL CHANNELS

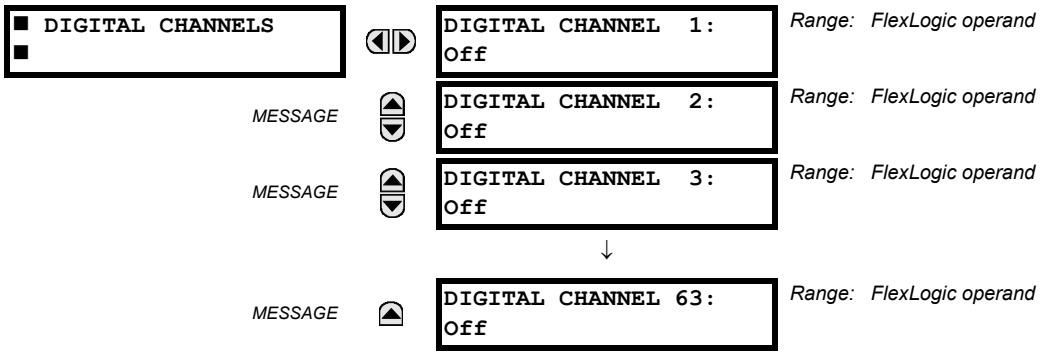

A **DIGITAL 1(63) CHANNEL** setting selects the FlexLogic operand state recorded in an oscillography trace. The length of each oscillography trace depends in part on the number of parameters selected here. Parameters set to "Off" are ignored. Upon startup, the relay will automatically prepare the parameter list.

c) ANALOG CHANNELS

PATH: SETTINGS ⇨ PRODUCT SETUP ⇨⇩ OSCILLOGRAPHY ⇨⇩ ANALOG CHANNELS

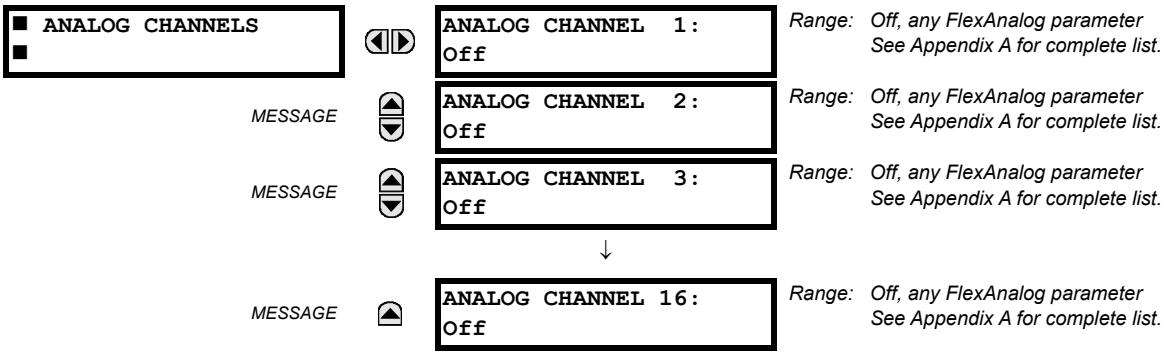

These settings select the metering actual value recorded in an oscillography trace. The length of each oscillography trace depends in part on the number of parameters selected here. Parameters set to "Off" are ignored. The parameters available in a given relay are dependent on:

- The type of relay,
- The type and number of CT/VT hardware modules installed, and
- The type and number of analog input hardware modules installed.

Upon startup, the relay will automatically prepare the parameter list. A list of all possible analog metering actual value parameters is presented in Appendix A: FlexAnalog Parameters. The parameter index number shown in any of the tables is used to expedite the selection of the parameter on the relay display. It can be quite time-consuming to scan through the list of parameters via the relay keypad and display - entering this number via the relay keypad will cause the corresponding parameter to be displayed.

All eight CT/VT module channels are stored in the oscillography file. The CT/VT module channels are named as follows:

<slot_letter><terminal_number>—<I or V><phase A, B, or C, or 4th input>

The fourth current input in a bank is called IG, and the fourth voltage input in a bank is called VX. For example, F2-IB designates the IB signal on terminal 2 of the CT/VT module in slot F.

If there are no CT/VT modules and analog input modules, no analog traces will appear in the file; only the digital traces will appear.

NOTE

The source harmonic indices appear as oscillography analog channels numbered from 0 to 23. These correspond directly to the to the 2nd to 25th harmonics in the relay as follows:

Analog channel 0 ↔ 2nd harmonic
Analog channel 1 ↔ 3rd harmonic
...
Analog channel 23 ↔ 25th harmonic

5.2.9 DATA LOGGER

PATH: SETTINGS ⇨⇩ PRODUCT SETUP ⇨⇩ DATA LOGGER

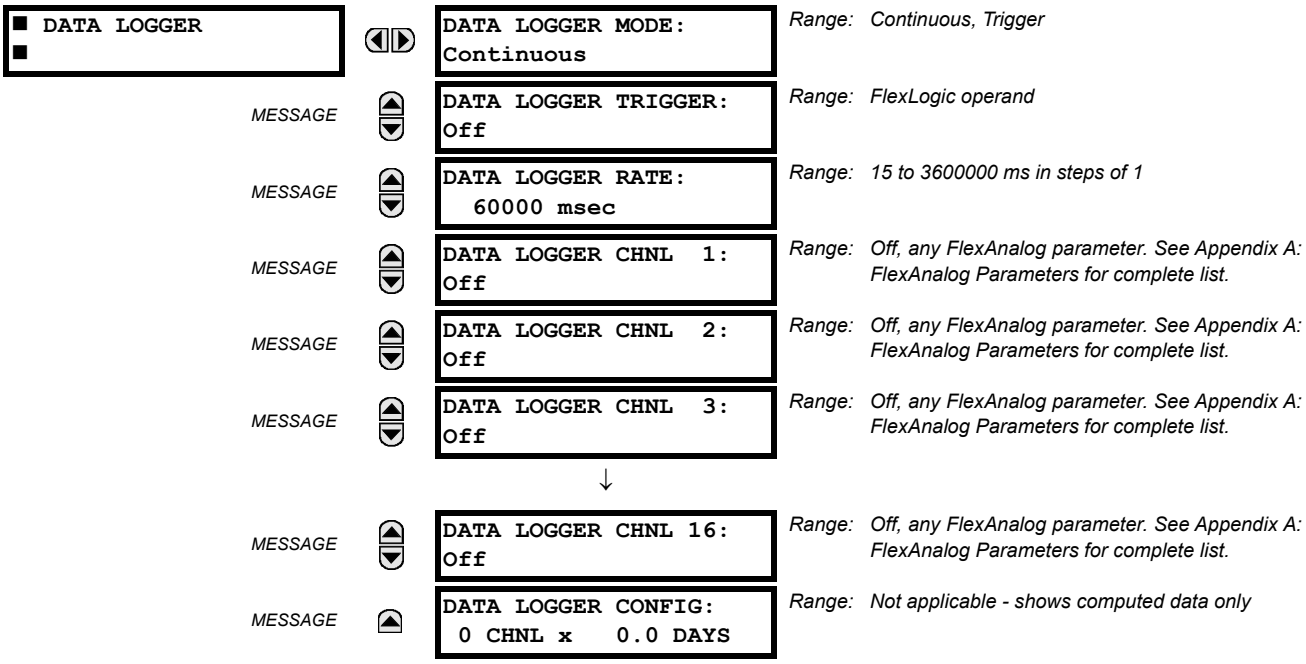

The data logger samples and records up to 16 analog parameters at a user-defined sampling rate. This recorded data may be downloaded to EnerVista UR Setup and displayed with *parameters* on the vertical axis and *time* on the horizontal axis. All data is stored in non-volatile memory, meaning that the information is retained when power to the relay is lost.

For a fixed sampling rate, the data logger can be configured with a few channels over a long period or a larger number of channels for a shorter period. The relay automatically partitions the available memory between the channels in use. Example storage capacities for a system frequency of 60 Hz are shown in the following table.

Table 5–10: DATA LOGGER STORAGE CAPACITY EXAMPLE

SAMPLING RATE	CHANNELS	DAYS	STORAGE CAPACITY
15 ms	1	0.1	954 s
	8	0.1	120 s
	9	0.1	107 s
	16	0.1	60 s
1000 ms	1	0.7	65457 s
	8	0.1	8182 s
	9	0.1	7273 s
	16	0.1	4091 s
60000 ms	1	45.4	3927420 s
	8	5.6	490920 s
	9	5	436380 s
	16	2.8	254460 s
3600000 ms	1	2727.5	235645200 s
	8	340.9	29455200 s
	9	303	26182800 s

NOTE

Changing any setting affecting data logger operation clears any data that is currently in the log.

- **DATA LOGGER MODE**: This setting configures the mode in which the data logger will operate. When set to "Continuous", the data logger will actively record any configured channels at the rate as defined by the **DATA LOGGER RATE**. The data logger will be idle in this mode if no channels are configured. When set to "Trigger", the data logger will begin to record any configured channels at the instance of the rising edge of the **DATA LOGGER TRIGGER** source FlexLogic operand. *The data logger will ignore all subsequent triggers* and will continue to record data until the active record is full. Once the data logger is full a **CLEAR DATA LOGGER** command is required to clear the data logger record before a new record can be started. Performing the **CLEAR DATA LOGGER** command will also stop the current record and reset the data logger to be ready for the next trigger.
- **DATA LOGGER TRIGGER**: This setting selects the signal used to trigger the start of a new data logger record. Any FlexLogic operand can be used as the trigger source. The **DATA LOGGER TRIGGER** setting only applies when the mode is set to "Trigger".
- **DATA LOGGER RATE:** This setting selects the time interval at which the actual value data will be recorded.
- **DATA LOGGER CHNL 1(16):** This setting selects the metering actual value that is to be recorded in Channel 1(16) of the data log. The parameters available in a given relay are dependent on: the type of relay, the type and number of CT/VT hardware modules installed, and the type and number of Analog Input hardware modules installed. Upon startup, the relay will automatically prepare the parameter list. A list of all possible analog metering actual value parameters is shown in Appendix A: FlexAnalog Parameters. The parameter index number shown in any of the tables is used to expedite the selection of the parameter on the relay display. It can be quite time-consuming to scan through the list of parameters via the relay keypad/display – entering this number via the relay keypad will cause the corresponding parameter to be displayed.
- **DATA LOGGER CONFIG:** This display presents the total amount of time the Data Logger can record the channels not selected to "Off" without over-writing old data.

5.2.10 USER-PROGRAMMABLE LEDS

a) MAIN MENU

PATH: SETTINGS ⇨ PRODUCT SETUP ⇨⇩ USER-PROGRAMMABLE LEDS

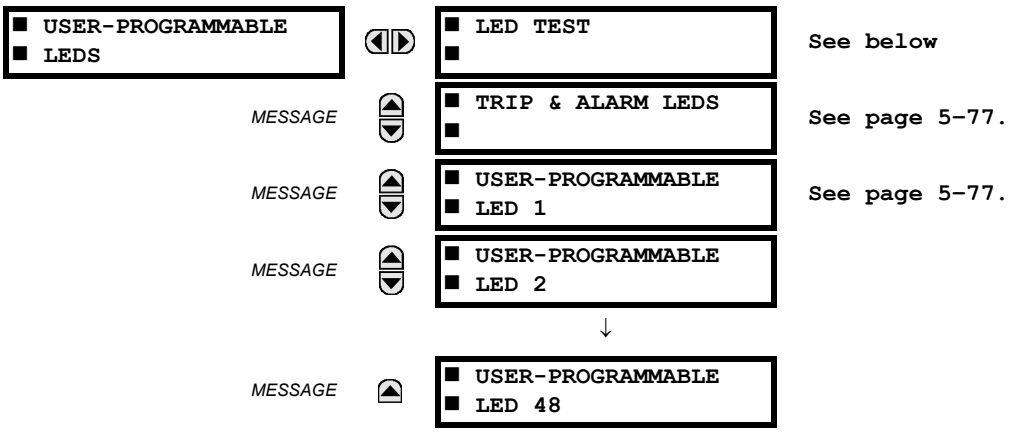

The 48 amber LEDs on relay panels 2 and 3 can be customized to illuminate when a selected FlexLogic operand is in the logic 1 state. The trip and alarm LEDs on panel 1 can also be customized in a similar manner. To ensure correct functionality of all LEDs, an LED test feature is also provided.

b) LED TEST

PATH: SETTINGS ⇨ PRODUCT SETUP ⇨⇩ USER-PROGRAMMABLE LEDS ⇨ LED TEST

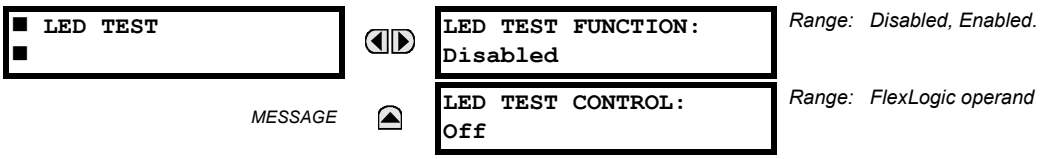

When enabled, the LED test can be initiated from any digital input or user-programmable condition such as user-programmable pushbutton. The control operand is configured under the **LED TEST CONTROL** setting. The test covers all LEDs, including the LEDs of the optional user-programmable pushbuttons.

The test consists of three stages.

1. All 62 LEDs on the relay are illuminated. This is a quick test to verify if any of the LEDs is "burned". This stage lasts as long as the control input is on, up to a maximum of 1 minute. After 1 minute, the test will end.
2. All the LEDs are turned off, and then one LED at a time turns on for 1 second, then back off. The test routine starts at the top left panel, moving from the top to bottom of each LED column. This test checks for hardware failures that lead to more than one LED being turned on from a single logic point. This stage can be interrupted at any time.
3. All the LEDs are turned on. One LED at a time turns off for 1 second, then back on. The test routine starts at the top left panel moving from top to bottom of each column of the LEDs. This test checks for hardware failures that lead to more than one LED being turned off from a single logic point. This stage can be interrupted at any time.

When testing is in progress, the LEDs are controlled by the test sequence, rather than the protection, control, and monitoring features. However, the LED control mechanism accepts all the changes to LED states generated by the relay and stores the actual LED states (on or off) in memory. When the test completes, the LEDs reflect the actual state resulting from relay response during testing. The reset pushbutton will not clear any targets when the LED Test is in progress.

A dedicated FlexLogic operand, LED TEST IN PROGRESS, is set for the duration of the test. When the test sequence is initiated, the LED TEST INITIATED event is stored in the event recorder.

The entire test procedure is user-controlled. In particular, stage 1 can last as long as necessary, and stages 2 and 3 can be interrupted. The test responds to the position and rising edges of the control input defined by the **LED TEST CONTROL** setting. The control pulses must last at least 250 ms to take effect. The following diagram explains how the test is executed.

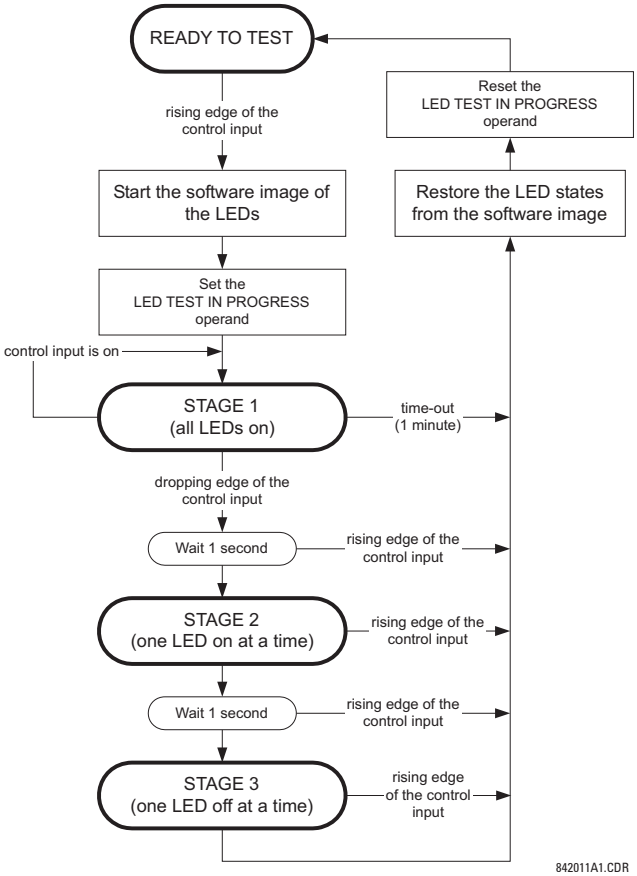

Figure 5–9: LED TEST SEQUENCE

APPLICATION EXAMPLE 1:

Assume one needs to check if any of the LEDs is "burned" through user-programmable pushbutton 1. The following settings should be applied. Configure user-programmable pushbutton 1 by making the following entries in the SETTINGS ⇨ PRODUCT SETUP ⇨⇩ USER-PROGRAMMABLE PUSHBUTTONS ⇨ USER PUSHBUTTON 1 menu:

PUSHBUTTON 1 FUNCTION: "Self-reset"
PUSHBTN 1 DROP-OUT TIME: "0.10 s"

Configure the LED test to recognize user-programmable pushbutton 1 by making the following entries in the SETTINGS ⇨ PRODUCT SETUP ⇨⇩ USER-PROGRAMMABLE LEDS ⇨ LED TEST menu:

LED TEST FUNCTION: "Enabled"
LED TEST CONTROL: "PUSHBUTTON 1 ON"

The test will be initiated when the user-programmable pushbutton 1 is pressed. The pushbutton should remain pressed for as long as the LEDs are being visually inspected. When finished, the pushbutton should be released. The relay will then automatically start stage 2. At this point forward, test may be aborted by pressing the pushbutton.

APPLICATION EXAMPLE 2:

Assume one needs to check if any LEDs are "burned" as well as exercise one LED at a time to check for other failures. This is to be performed via user-programmable pushbutton 1.

After applying the settings in application example 1, hold down the pushbutton as long as necessary to test all LEDs. Next, release the pushbutton to automatically start stage 2. Once stage 2 has started, the pushbutton can be released. When stage 2 is completed, stage 3 will automatically start. The test may be aborted at any time by pressing the pushbutton.

c) TRIP AND ALARM LEDS

PATH: SETTINGS ⇨ PRODUCT SETUP ⇨⇩ USER-PROGRAMMABLE LEDS ⇨⇩ TRIP & ALARM LEDS

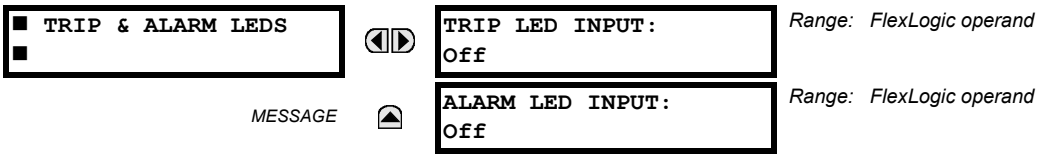

The trip and alarm LEDs are in the first LED column (enhanced faceplate) and on LED panel 1 (basic faceplate). Each indicator can be programmed to become illuminated when the selected FlexLogic operand is in the logic 1 state.

d) USER-PROGRAMMABLE LED 1(48)

PATH: SETTINGS ⇨ PRODUCT SETUP ⇨⇩ USER-PROGRAMMABLE LEDS ⇨⇩ USER-PROGRAMMABLE LED 1(48)

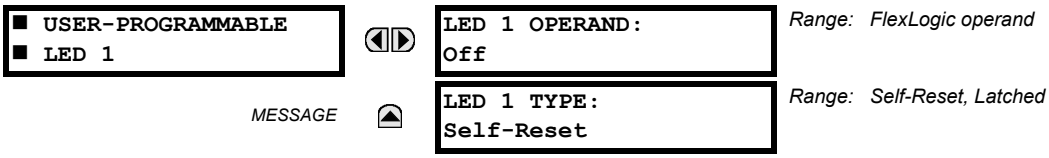

There are 48 amber LEDs across the relay faceplate LED panels. Each of these indicators can be programmed to illuminate when the selected FlexLogic operand is in the logic 1 state.

For the basic faceplate, the LEDs are located as follows.

- LED Panel 2: user-programmable LEDs 1 through 24
- LED Panel 3: user programmable LEDs 25 through 48

For the enhanced faceplate, the LEDs are located as follows.

- LED column 2: user-programmable LEDs 1 through 12
- LED column 3: user-programmable LEDs 13 through 24
- LED column 4: user-programmable LEDs 25 through 36
- LED column 5: user-programmable LEDs 37 through 48

See the LED Indicators section in chapter 4 for information on the location of these indexed LEDs.

The user-programmable LED settings select the FlexLogic operands that control the LEDs. If the **LED 1 TYPE** setting is "Self-Reset" (the default setting), the LED illumination will track the state of the selected LED operand. If the **LED 1 TYPE** setting is "Latched", the LED, once lit, remains so until reset by the faceplate RESET button, from a remote device via a communications channel, or from any programmed operand, even if the LED operand state de-asserts.

Table 5–11: RECOMMENDED SETTINGS FOR USER-PROGRAMMABLE LEDS

SETTING	PARAMETER
LED 1 operand	SETTING GROUP ACT 1
LED 2 operand	SETTING GROUP ACT 2
LED 3 operand	SETTING GROUP ACT 3
LED 4 operand	SETTING GROUP ACT 4
LED 5 operand	SETTING GROUP ACT 5
LED 6 operand	SETTING GROUP ACT 6
LED 7 operand	Off
LED 8 operand	Off
LED 9 operand	Off
LED 10 operand	Off
LED 11 operand	Off
LED 12 operand	Off

SETTING	PARAMETER
LED 13 operand	Off
LED 14 operand	Off
LED 15 operand	Off
LED 16 operand	Off
LED 17 operand	SYNC 1 SYNC OP
LED 18 operand	SYNC 2 SYNC OP
LED 19 operand	Off
LED 20 operand	Off
LED 21 operand	Off
LED 22 operand	Off
LED 23 operand	Off
LED 24 operand	Off

See the figure in the Setting Groups section in the Control Elements section later in this chapter for an example of group activation.

5.2.11 USER-PROGRAMMABLE SELF TESTS

PATH: SETTINGS ⇨ PRODUCT SETUP ⇨⇩ USER-PROGRAMMABLE SELF TESTS

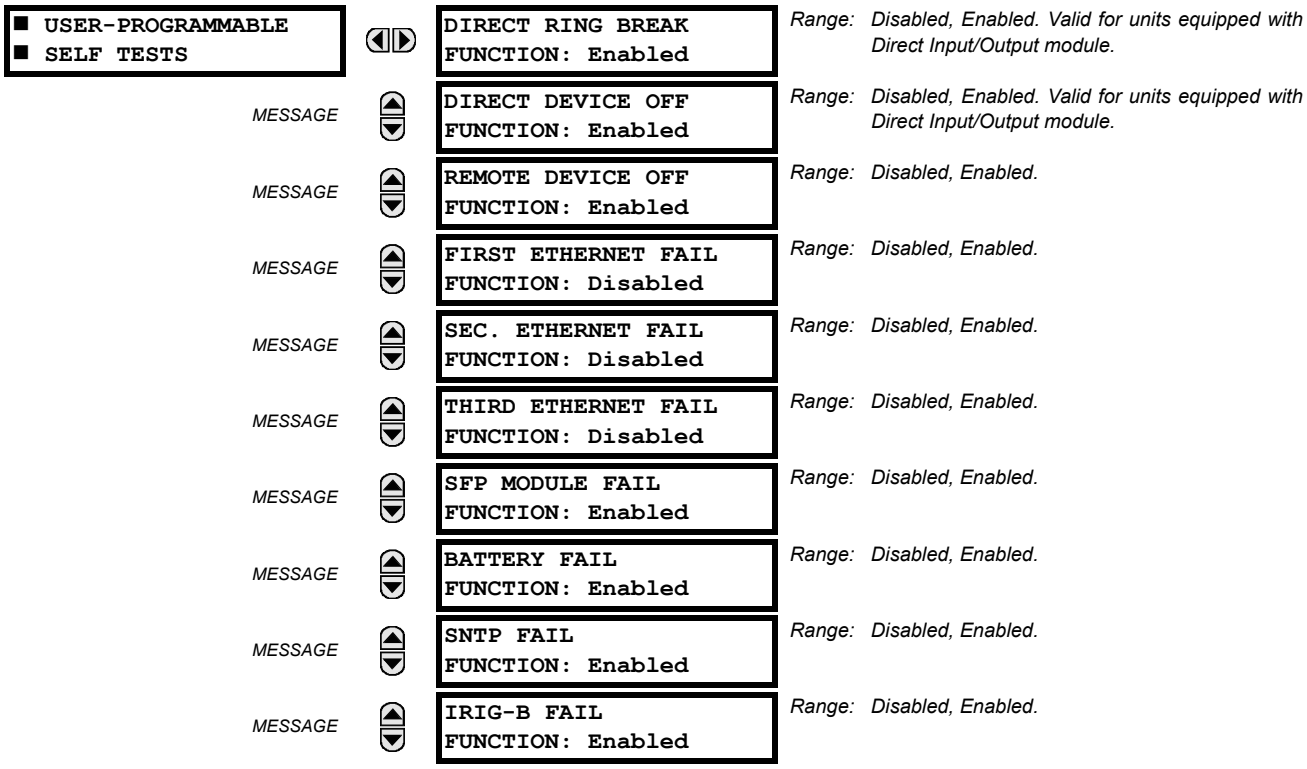

MESSAGE

```
PTP FAIL
FUNCTION: Enabled
```

Range: Disabled, Enabled.

All major self-test alarms are reported automatically with their corresponding FlexLogic operands, events, and targets. Most of the minor alarms can be disabled if desired.

When in the Disabled mode, minor alarms do not assert a FlexLogic operand, write to the event recorder, or display target messages. Moreover, they do not trigger the **ANY MINOR ALARM** or **ANY SELF-TEST** messages. When in Enabled mode, minor alarms continue to function along with other major and minor alarms. See the Relay Self-Tests section in chapter 7 for information on major and minor self-test alarms.

5.2.12 CONTROL PUSHBUTTONS

PATH: SETTINGS ⇨ PRODUCT SETUP ⇨⇩ CONTROL PUSHBUTTONS ⇨ CONTROL PUSHBUTTON 1(7)

```
■ CONTROL
■ PUSHBUTTON 1
```

```
CONTROL PUSHBUTTON 1
FUNCTION: Disabled
```

Range: Disabled, Enabled

MESSAGE

```
CONTROL PUSHBUTTON 1
EVENTS: Disabled
```

Range: Disabled, Enabled

There are three standard control pushbuttons, labeled USER 1, USER 2, and USER 3, on the basic and enhanced front panels. These are user-programmable and can be used for various applications such as performing an LED test, switching setting groups, and invoking and scrolling though user-programmable displays.

The locations of the control pushbuttons are shown in the following figures.

Figure 5–10: CONTROL PUSHBUTTONS (ENHANCED FACEPLATE)

An additional four control pushbuttons are included on the basic faceplate when the G60 is ordered with the 12 user-programmable pushbutton option.

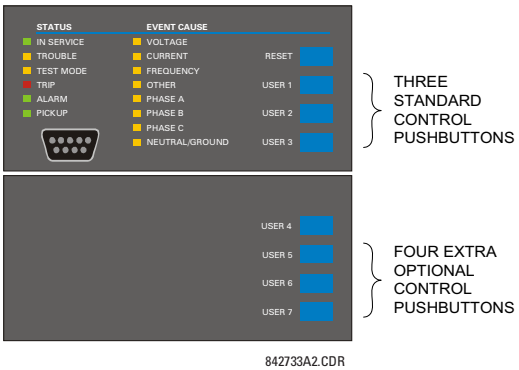

Figure 5–11: CONTROL PUSHBUTTONS (BASIC FACEPLATE)

Control pushbuttons are not typically used for critical operations and are not protected by the control password. However, by supervising their output operands, the user can dynamically enable or disable control pushbuttons for security reasons.

Each control pushbutton asserts its own FlexLogic operand. These operands should be configured appropriately to perform the desired function. The operand remains asserted as long as the pushbutton is pressed and resets when the pushbutton is released. A dropout delay of 100 ms is incorporated to ensure fast pushbutton manipulation will be recognized by various features that may use control pushbuttons as inputs.

An event is logged in the event record (as per user setting) when a control pushbutton is pressed. No event is logged when the pushbutton is released. The faceplate keys (including control keys) cannot be operated simultaneously – a given key must be released before the next one can be pressed.

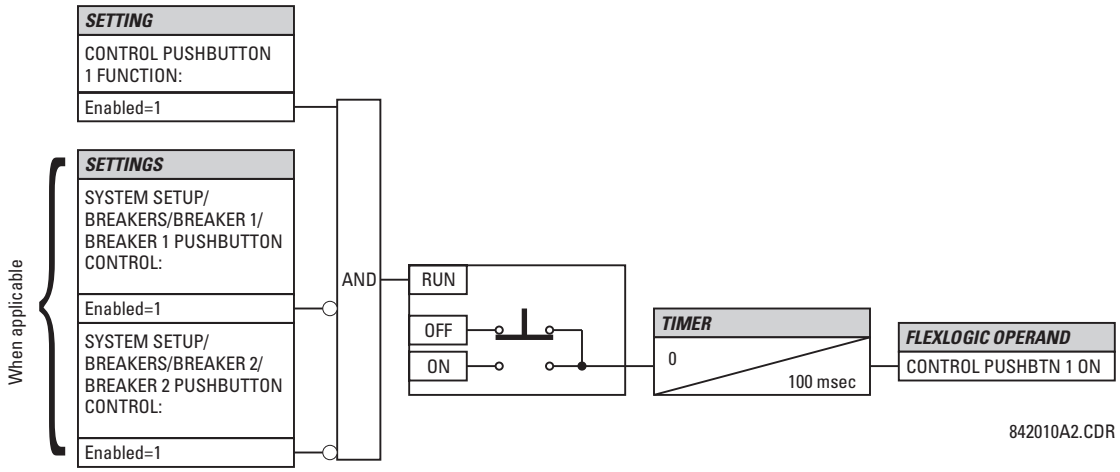

Figure 5–12: CONTROL PUSHBUTTON LOGIC

PATH: SETTINGS ⇨ PRODUCT SETUP ⇨⇩ USER-PROGRAMMABLE PUSHBUTTONS ⇨ USER PUSHBUTTON 1(16)

■ USER PUSHBUTTON 1 ■	◀▶	PUSHBUTTON 1 FUNCTION: Disabled	Range: Self-Reset, Latched, Disabled
	MESSAGE ▲▼	PUSHBTN 1 ID TEXT: USER PB 1	Range: Up to 20 alphanumeric characters
	MESSAGE ▲▼	PUSHBTN 1 ON TEXT: USER PB 1 ON	Range: Up to 20 alphanumeric characters
	MESSAGE ▲▼	PUSHBTN 1 OFF TEXT: USER PB 1 OFF	Range: Up to 20 alphanumeric characters
	MESSAGE ▲▼	PUSHBTN 1 HOLD: 0.1 s	Range: 0.0 to 10.0 s in steps of 0.1
	MESSAGE ▲▼	PUSHBTN 1 SET: Off	Range: FlexLogic operand
	MESSAGE ▲▼	PUSHBTN 1 RESET: Off	Range: FlexLogic operand
	MESSAGE ▲▼	PUSHBTN 1 AUTORST: Disabled	Range: Disabled, Enabled
	MESSAGE ▲▼	PUSHBTN 1 AUTORST DELAY: 1.0 s	Range: 0.2 to 600.0 s in steps of 0.1
	MESSAGE ▲▼	PUSHBTN 1 REMOTE: Off	Range: FlexLogic operand
	MESSAGE ▲▼	PUSHBTN 1 LOCAL: Off	Range: FlexLogic operand
	MESSAGE ▲▼	PUSHBTN 1 DROP-OUT TIME: 0.00 s	Range: 0 to 60.00 s in steps of 0.05
	MESSAGE ▲▼	PUSHBTN 1 LED CTL: Off	Range: FlexLogic operand
	MESSAGE ▲▼	PUSHBTN 1 MESSAGE: Disabled	Range: Disabled, Normal, High Priority
	MESSAGE ▲	PUSHBUTTON 1 EVENTS: Disabled	Range: Disabled, Enabled

SOFTWARE OPTION

The G60 is provided with this optional feature, specified as an option at the time of ordering. Using the order code for your device, see the order codes in chapter 2 for details.

User-programmable pushbuttons provide an easy and error-free method of entering digital state (on, off) information. The number depends on the front panel ordered.

- Enhanced horizontal front panel — 16 user-programmable pushbuttons
- Enhanced vertical front panel — 6 user-programmable pushbuttons
- Basic horizontal front panel — 12 user-programmable pushbuttons

NOTE

User-programmable pushbuttons require a front panel with that option. If the front panel was ordered separately, update the EnerVista software under **Maintenance > Enable Pushbutton**.

The digital state can be entered locally (by directly pressing the front panel pushbutton) or remotely (via FlexLogic operands) into FlexLogic equations, protection elements, and control elements. Typical applications include breaker control, autorecloser blocking, and setting groups changes. The user-programmable pushbuttons are under the control level of password protection.

The figure shows user-configurable pushbuttons for the enhanced front panel.

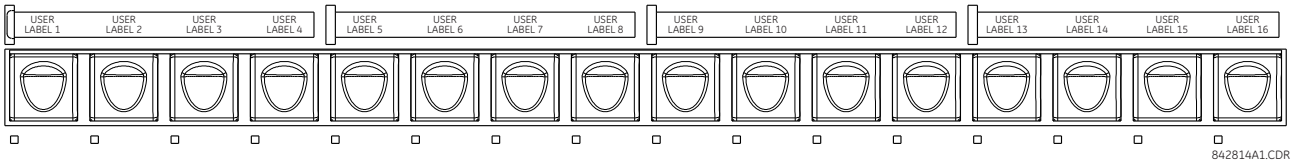

Figure 5–13: USER-PROGRAMMABLE PUSHBUTTONS (ENHANCED FRONT PANEL)

The following figure shows user-configurable pushbuttons for the basic front panel.

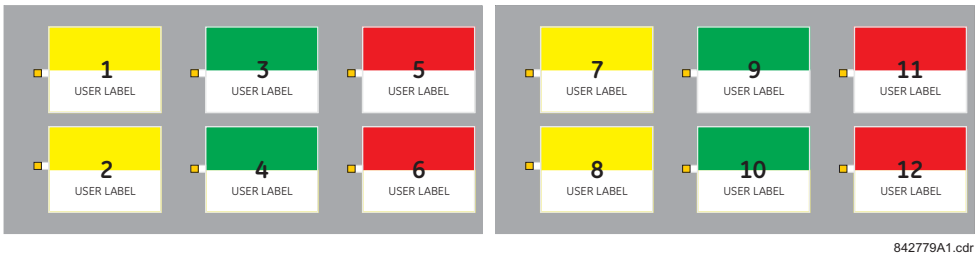

Figure 5–14: USER-PROGRAMMABLE PUSHBUTTONS (BASIC FRONT PANEL)

Both the basic and enhanced front panel pushbuttons can be custom labeled with a factory-provided template, available online at http://www.gegridsolutions.com/multilin. The EnerVista software can also be used to create labels for the enhanced front panel.

Each pushbutton asserts its own "On" and "Off" FlexLogic operands (for example, PUSHBUTTON 1 ON and PUSHBUTTON 1 OFF). These operands are available for each pushbutton and are used to program specific actions. If any pushbutton is active, the ANY PB ON operand is asserted.

Each pushbutton has an associated LED indicator. By default, this indicator displays the present status of the corresponding pushbutton (on or off). However, each LED indicator can be assigned to any FlexLogic operand through the **PUSHBTN 1 LED CTL** setting.

The activation and deactivation of user-programmable pushbuttons depends on whether latched or self-reset mode is programmed.

- *Latched mode*: In latched mode, a pushbutton can be set (activated) by asserting the operand assigned to the **PUSHBTN 1 SET** setting or by directly pressing the associated front panel pushbutton. The state of each pushbutton is stored in non-volatile memory and maintained through a loss of control power.

  The pushbutton is reset (deactivated) in latched mode by asserting the operand assigned to the **PUSHBTN 1 RESET** setting or by directly pressing the associated active front panel pushbutton.

  It can also be programmed to reset automatically through the **PUSHBTN 1 AUTORST** and **PUSHBTN 1 AUTORST DELAY** settings. These settings enable the autoreset timer and specify the associated time delay. The autoreset timer can be used in select-before-operate (SBO) breaker control applications, where the command type (close/open) or breaker location (feeder number) must be selected prior to command execution. The selection must reset automatically if control is not executed within a specified time period.

- *Self-reset mode*: In self-reset mode, a user-programmable pushbutton can be set (activated) by asserting the operand assigned to the PUSHBTN 1 SET setting or by pressing the front panel pushbutton. A pushbutton remains active for the time it is pressed plus the dropout time specified in the **PUSHBTN 1 DROP-OUT TIME** setting. If the pushbutton is activated via FlexLogic, the pulse duration is specified by the **PUSHBTN 1 DROP-OUT TIME** only. The time the operand remains assigned to the **PUSHBTN 1 SET** setting remains On has no effect on the pulse duration.

NOTE

The pulse duration of the remote set or local front panel pushbutton must be at least 50 ms to operate the pushbutton. This allows the user-programmable pushbuttons to properly operate during power cycling events and various system disturbances that can cause transient assertion of the operating signals.

The local and remote operation of each user-programmable pushbutton can be inhibited through the **PUSHBTN 1 LOCAL** and **PUSHBTN 1 REMOTE** settings. If local inhibit is applied, the pushbutton ignores set and reset commands executed through the front panel pushbuttons. If remote inhibit is applied, the pushbutton ignores set and reset commands executed through FlexLogic operands.

The inhibit functions are not applied to the autoreset feature. The inhibit function can be used in SBO control operations to prevent user-programmable pushbutton activation and ensuring “one-at-a-time” select operation.

The inhibit functions can also be used to prevent pushbutton activation from the accidental pressing of the front panel pushbuttons. The separate inhibit of the local and remote operation simplifies the implementation of local/remote control supervision.

Pushbutton states can be logged by the event recorder. User-defined messages can also be associated with each pushbutton and displayed when the pushbutton is activated and when in latched mode when the pushbutton deactivated.

- **PUSHBUTTON 1 FUNCTION**: This setting selects the mode of the pushbutton (Self-Reset, Latched, Disabled). If set to “Disabled,” the pushbutton is not active and the corresponding FlexLogic operands (both “On” and “Off”) are deasserted.
- **PUSHBTN 1 ID TEXT:** This setting specifies the top 20-character line of the user-programmable pushbutton message and is intended to provide ID information of the pushbutton. See the User-Definable Displays section in this chapter for instructions on how to enter alphanumeric characters from the keypad.
- **PUSHBTN 1 ON TEXT:** This setting specifies the bottom 20-character line of the user-programmable message and is displayed when the pushbutton is in the “on” position. See the User-Definable Displays section for instructions on entering alphanumeric characters from the keypad.
- **PUSHBTN 1 OFF TEXT:** This setting specifies the bottom 20-character line of the user-programmable pushbutton message and displays when the pushbutton is deactivated and the **PUSHBUTTON 1 FUNCTION** is “Latched”. A message does not display when the **PUSHBUTTON 1 FUNCTION** is “Self-reset” as the pushbutton operand status is implied to be “Off” upon its release. The length of the “Off” message is configured with the **PRODUCT SETUP ⇨⇩ DISPLAY PROPERTIES ⇨ FLASH MESSAGE TIME** setting.
- **PUSHBTN 1 HOLD**: This setting specifies the time required for a front panel pushbutton to be pressed before it is deemed active. This timer is reset upon release of the pushbutton. Note that user-programmable pushbutton operation requires the front panel pushbutton to be pressed a minimum of 56 ms for a 60 Hz system or 60 ms for a 50 Hz system. This minimum time is required prior to activating the user-programmable pushbutton hold timer.
- **PUSHBTN 1 SET**: This setting assigns the FlexLogic operand serving to activate the user-programmable pushbutton element. The duration of the incoming set signal must be at least 56 ms for a 60 Hz system or 60 ms for a 50 Hz system.
- **PUSHBTN 1 RESET**: This setting assigns the FlexLogic operand serving to deactivate the user-programmable pushbutton element. This setting is applicable only if the user-programmable pushbutton is in "Latched" mode.
- **PUSHBTN 1 AUTORST**: This setting enables the user-programmable pushbutton autoreset feature. This setting is applicable only if the pushbutton is in “Latched” mode.
- **PUSHBTN 1 AUTORST DELAY**: This setting specifies the time delay for automatic reset of the pushbutton when in "Latched" mode.
- **PUSHBTN 1 REMOTE**: This setting assigns the FlexLogic operand serving to inhibit user-programmable pushbutton operation from the operand assigned to the **PUSHBTN 1 SET** or **PUSHBTN 1 RESET** settings.
- **PUSHBTN 1 LOCAL**: This setting assigns the FlexLogic operand serving to inhibit user-programmable pushbutton operation from the front panel pushbuttons. This inhibit functionality is not applicable to pushbutton autoreset.
- **PUSHBTN 1 DROP-OUT TIME**: This setting applies only to “Self-Reset” mode and specifies the duration of the user-programmable pushbutton active status after the front panel pushbutton has been released. When activated remotely, this setting specifies the entire activation time of the pushbutton; the length of time the operand selected by PUSHBTN 1 SET remains on has no effect on the pulse duration.
- **PUSHBTN 1 LED CTL**: This setting assigns the FlexLogic operand serving to drive the front panel pushbutton LED. If this setting is “Off”, then LED operation is directly linked to the PUSHBUTTON 1 ON operand.

- **PUSHBTN 1 MESSAGE**: This setting controls the behavior of the user-programmable pushbutton that is programmed in the **PUSHBTN 1 ID** and **PUSHBTN 1 ON TEXT** settings, and the behavior of the user-programmable pushbutton off message that is programmed in the **PUSHBTN1 ID** and **PUSHBTN 1 OFF TEXT** settings.

  When set to "Disabled", user-programmable pushbutton messages do not display. Otherwise the on message displays when the user-programmable pushbutton becomes activated, and if in the "Latched" mode the off message displays when the user-programmable pushbutton becomes deactivated.

  When set to "Normal", the duration the message displays is as specified by the **FLASH MESSAGE TIME** setting.

  When set to "High Priority", the duration of the off message is as specified by the **FLASH MESSAGE TIME** setting, but the on message is displayed as long as the user-programmable pushbutton is activated. While activated, target and other messages are suppressed. To allow front panel keypad operation, when a keypad button is pressed the message is supressed for 10 seconds.

- **PUSHBUTTON 1 EVENTS**: If this setting is enabled, each user-programmable pushbutton state change is logged as an event into the event recorder.

The figures show the user-programmable pushbutton logic.

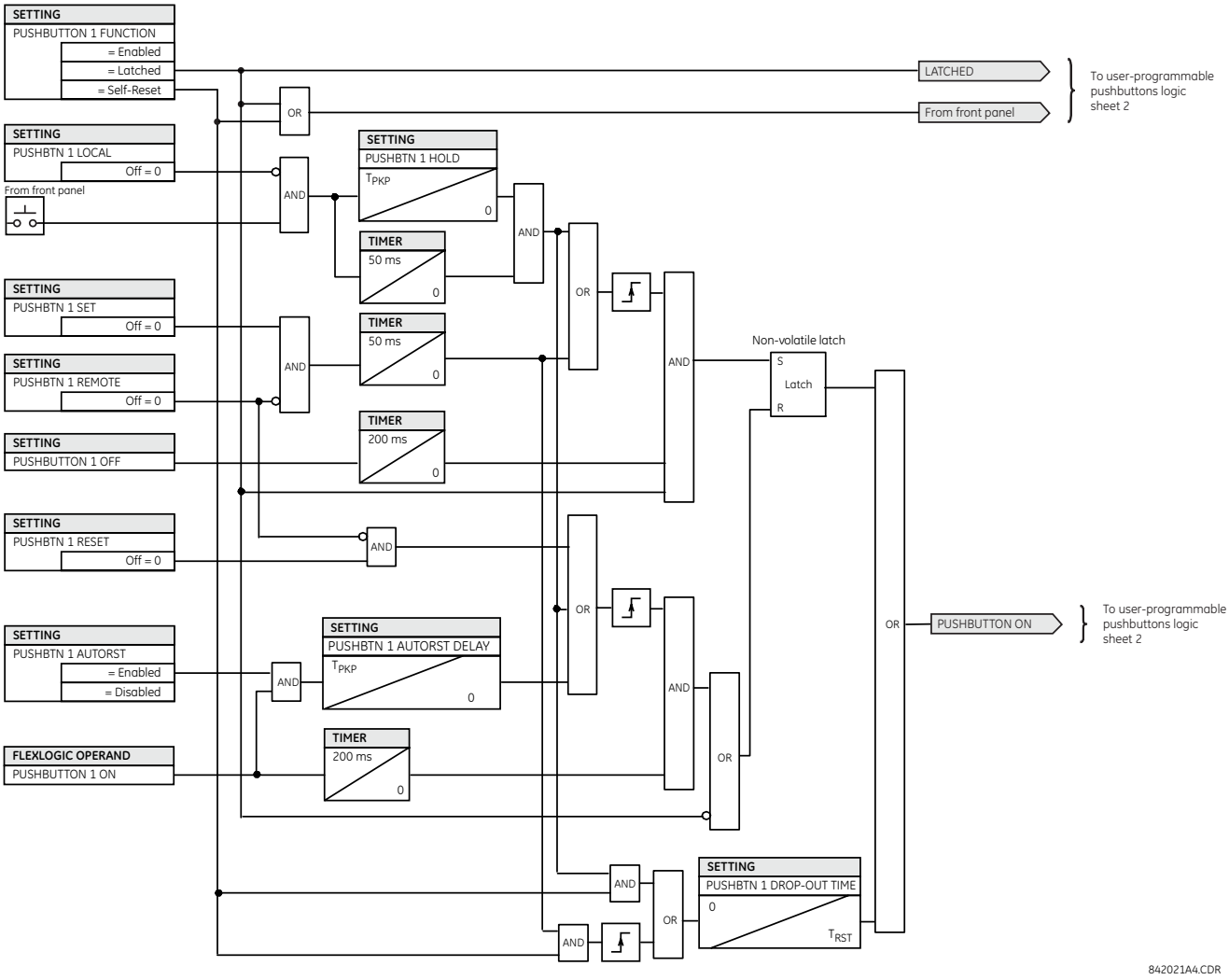

Figure 5–15: USER-PROGRAMMABLE PUSHBUTTON LOGIC (Sheet 1 of 2)

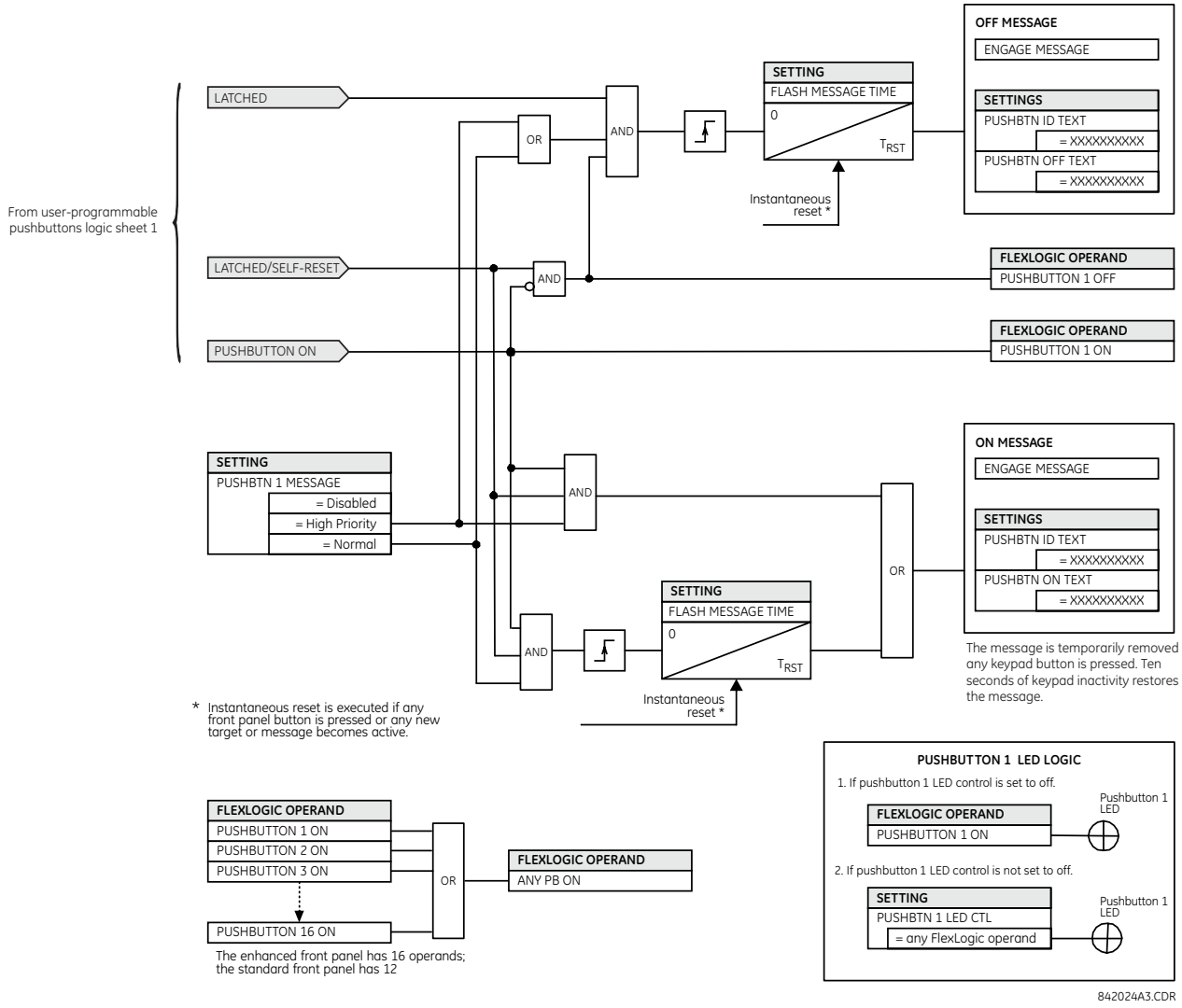

Figure 5–16: USER-PROGRAMMABLE PUSHBUTTON LOGIC (Sheet 2 of 2)

5.2.14 FLEX STATE PARAMETERS

PATH: SETTINGS ⇨ PRODUCT SETUP ⇨⇩ FLEX STATE PARAMETERS

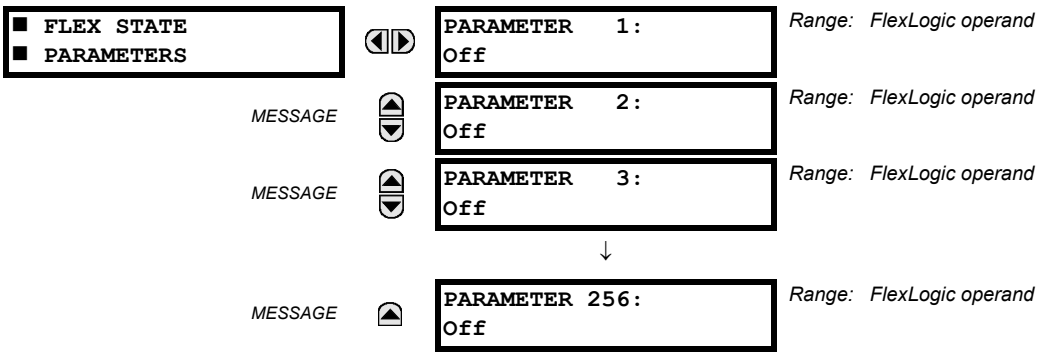

This feature provides a mechanism where any of 256 selected FlexLogic operand states can be used for efficient monitoring. The feature allows user-customized access to the FlexLogic operand states in the relay. The state bits are packed so that 16 states may be read out in a single Modbus register. The state bits can be configured so that all of the states which are of interest to the user are available in a minimum number of Modbus registers.

The state bits may be read out in the "Flex States" register array beginning at Modbus address 0900h. Sixteen states are packed into each register, with the lowest-numbered state in the lowest-order bit. There are 16 registers to accommodate the 256 state bits.

5.2.15 USER-DEFINABLE DISPLAYS

a) MAIN MENU

PATH: SETTINGS ⇨ PRODUCT SETUP ⇨⇩ USER-DEFINABLE DISPLAYS

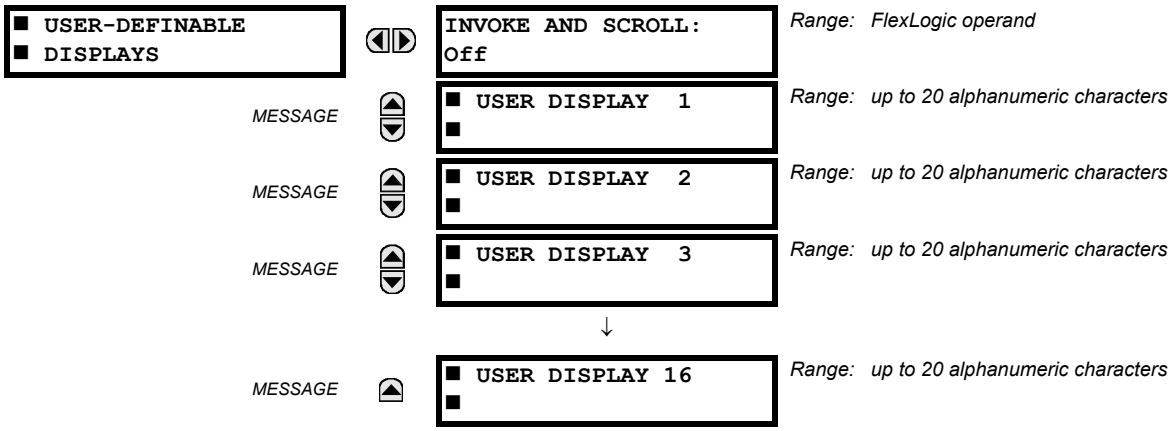

This menu provides a mechanism for manually creating up to 16 user-defined information displays in a convenient viewing sequence in the **USER DISPLAYS** menu (between the **TARGETS** and **ACTUAL VALUES** top-level menus). The sub-menus facilitate text entry and Modbus register data pointer options for defining the user display content.

Once programmed, the user-definable displays can be viewed in two ways.

- **KEYPAD**: Use the MENU key to select the **USER DISPLAYS** menu item to access the first user-definable display (note that only the programmed screens are displayed). The screens can be scrolled using the UP and DOWN keys. The display disappears after the default message time-out period specified by the **PRODUCT SETUP ⇨⇩ DISPLAY PROPERTIES ⇨⇩ DEFAULT MESSAGE TIMEOUT** setting.
- **USER-PROGRAMMABLE CONTROL INPUT**: The user-definable displays also respond to the **INVOKE AND SCROLL** setting. Any FlexLogic operand (in particular, the user-programmable pushbutton operands), can be used to navigate the programmed displays.

  On the rising edge of the configured operand (such as when the pushbutton is pressed), the displays are invoked by showing the last user-definable display shown during the previous activity. From this moment onward, the operand acts exactly as the down key and allows scrolling through the configured displays. The last display wraps up to the first one. The **INVOKE AND SCROLL** input and the DOWN key operate concurrently.

  When the default timer expires (set by the **DEFAULT MESSAGE TIMEOUT** setting), the relay will start to cycle through the user displays. The next activity of the **INVOKE AND SCROLL** input stops the cycling at the currently displayed user display, not at the first user-defined display. The **INVOKE AND SCROLL** pulses must last for at least 250 ms to take effect.

b) USER DISPLAY 1(16)

PATH: SETTINGS ⇨ PRODUCT SETUP ⇨⇩ USER-DEFINABLE DISPLAYS ⇨ USER DISPLAY 1(16)

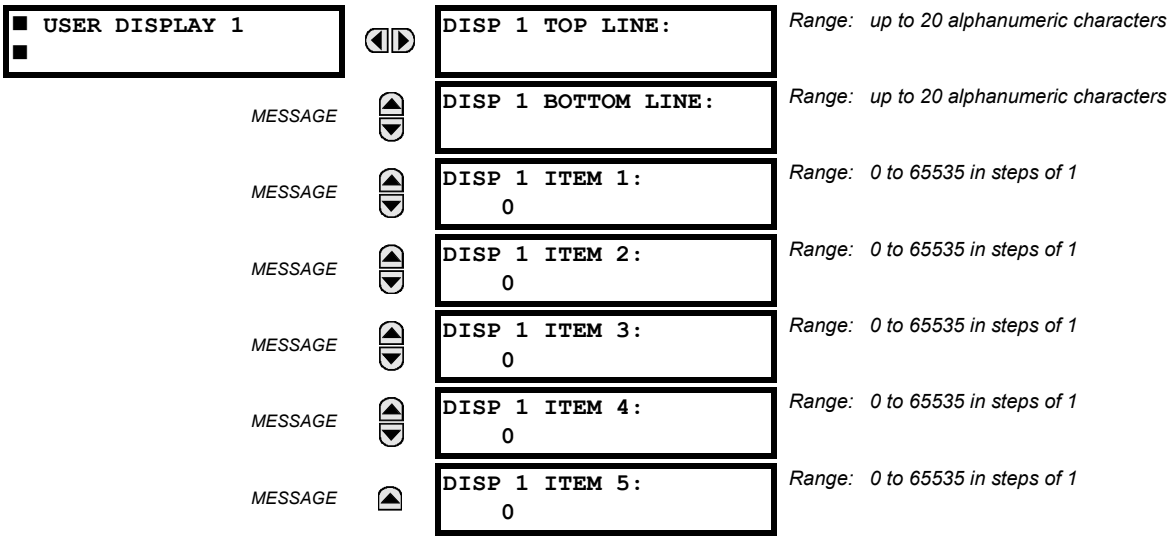

Any existing system display can be automatically copied into an available user display by selecting the existing display and pressing the ENTER key. The display will then prompt **ADD TO USER DISPLAY LIST?**. After selecting "Yes", a message indicates that the selected display has been added to the user display list. When this type of entry occurs, the sub-menus are automatically configured with the proper content – this content may subsequently be edited.

This menu is used to enter user-defined text and user-selected Modbus-registered data fields into the particular user display. Each user display consists of two 20-character lines (top and bottom). The tilde (~) character is used to mark the start of a data field – the length of the data field needs to be accounted for. Up to five separate data fields can be entered in a user display – the *n*th tilde (~) refers to the *n*th item.

A user display may be entered from the faceplate keypad or the EnerVista UR Setup interface (preferred for convenience). The following procedure shows how to enter text characters in the top and bottom lines from the faceplate keypad:

1. Select the line to be edited.
2. Press the decimal key to enter text edit mode.
3. Use either VALUE key to scroll through the characters. A space is selected like a character.
4. Press the decimal key to advance the cursor to the next position.
5. Repeat step 3 and continue entering characters until the desired text is displayed.
6. The HELP key may be pressed at any time for context sensitive help information.
7. Press the ENTER key to store the new settings.

To enter a numerical value for any of the five items (the *decimal form* of the selected Modbus address) from the faceplate keypad, use the number keypad. Use the value of "0" for any items not being used. Use the HELP key at any selected system display (setting, actual value, or command) which has a Modbus address, to view the *hexadecimal form* of the Modbus address, then manually convert it to decimal form before entering it (EnerVista UR Setup usage conveniently facilitates this conversion).

Use the MENU key to go to the user displays menu to view the user-defined content. The current user displays will show in sequence, changing every four seconds. While viewing a user display, press the ENTER key and then select the 'Yes" option to remove the display from the user display list. Use the MENU key again to exit the user displays menu.

An example of user display setup and result is shown below:

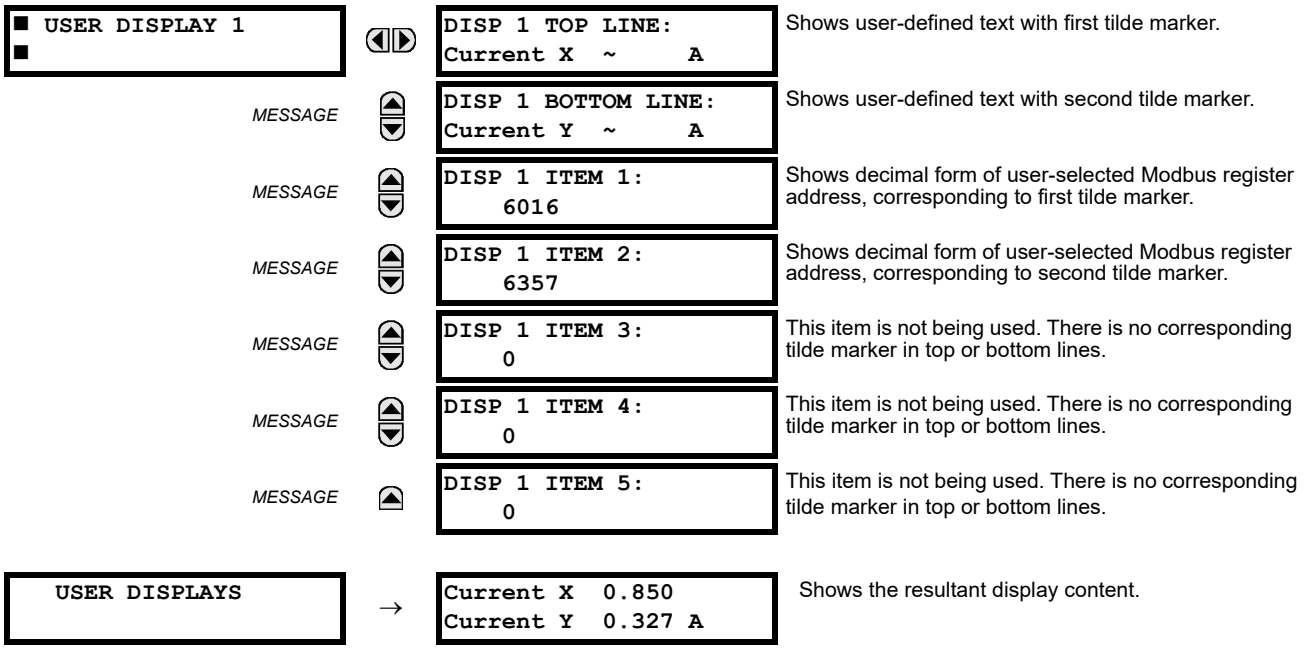

NOTE If the parameters for the top line and the bottom line items have the same units, then the unit is displayed on the bottom line only. The units are only displayed on both lines if the units specified both the top and bottom line items are different.

5.2.16 DIRECT INPUTS/OUTPUTS

a) MAIN MENU

PATH: SETTINGS ⇨ PRODUCT SETUP ⇨⇩ DIRECT I/O

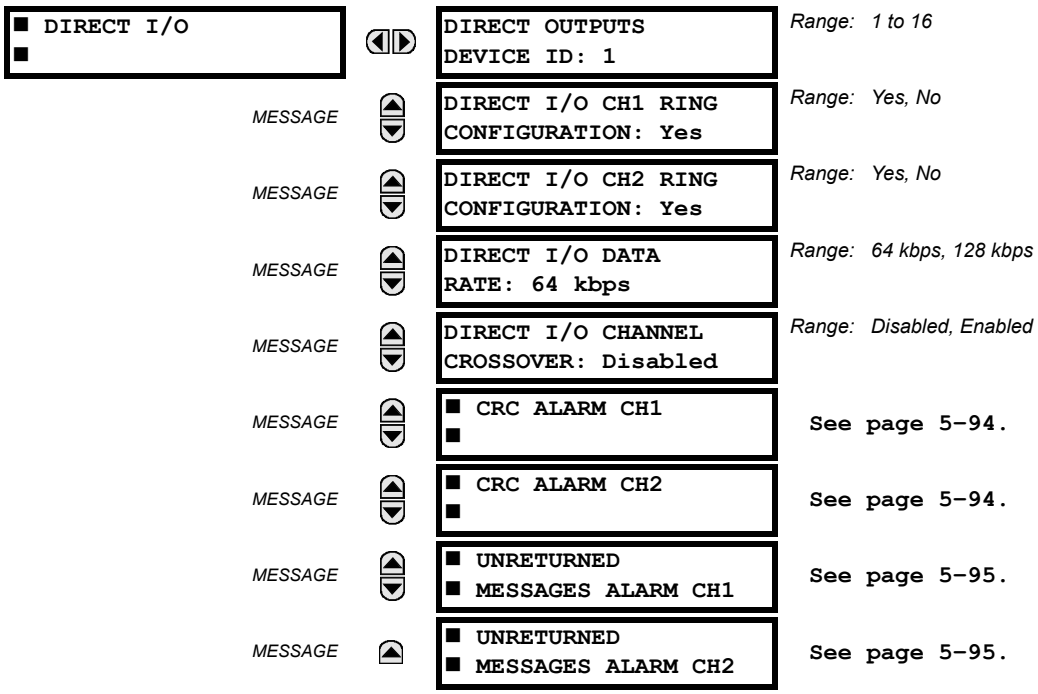

This option is available when an INTER-RELAY COMMUNICATIONS card is specified at the time of ordering. With the option, direct inputs/outputs display by default. When you enable the teleprotection feature, direct I/O is not visible.

Direct inputs and outputs are intended for exchange of status information (inputs and outputs) between UR-series relays connected directly via type 7 or type 2 digital communications cards. The mechanism is very similar to IEC 61850 GSSE, except that communications takes place over a non-switchable isolated network and is optimized for speed. On type 7 cards that support two channels, direct output messages are sent from both channels simultaneously. This effectively sends direct output messages both ways around a ring configuration. On type 7 cards that support one channel, direct output messages are sent only in one direction. Messages will be resent (forwarded) when it is determined that the message did not originate at the receiver.

For the direct I/Os to function properly, all UR devices sending I/Os using an Inter-Relay Communications card must have identical firmware revisions.

Direct output message timing is similar to GSSE message timing. Integrity messages (with no state changes) are sent at least every 1000 ms. Messages with state changes are sent within the main pass scanning the inputs and asserting the outputs unless the communication channel bandwidth has been exceeded. Two self-tests are performed and signaled by the following FlexLogic operands:

1. DIRECT RING BREAK (direct input/output ring break). This FlexLogic operand indicates that direct output messages sent from a UR-series relay are not being received back by the relay.
2. DIRECT DEVICE 1 OFF to DIRECT DEVICE 16 OFF (direct device offline). These FlexLogic operands indicate that direct output messages from at least one direct device are not being received.

Direct input and output settings are similar to remote input and output settings. The equivalent of the remote device name strings for direct inputs and outputs is the **DIRECT OUTPUT DEVICE ID**. The **DIRECT OUTPUT DEVICE ID** setting identifies the relay in all direct output messages. All UR-series IEDs in a ring should have unique numbers assigned. The IED ID is used to identify the sender of the direct input and output message.

If the direct input and output scheme is configured to operate in a ring (**DIRECT I/O CH1 RING CONFIGURATION** or **DIRECT I/O CH2 RING CONFIGURATION** is “Yes”), all direct output messages should be received back. If not, the direct input/output ring break self-test is triggered. The self-test error is signaled by the DIRECT RING BREAK FlexLogic operand.

Select the **DIRECT I/O DATA RATE** to match the data capabilities of the communications channel. All IEDs communicating over direct inputs and outputs must be set to the same data rate. UR-series IEDs equipped with dual-channel communications cards apply the same data rate to both channels. Delivery time for direct input and output messages is approximately 0.2 of a power system cycle at 128 kbps and 0.4 of a power system cycle at 64 kbps, per each ‘bridge’.

Table 5–12: DIRECT INPUT AND OUTPUT DATA RATES

MODULE	CHANNEL	SUPPORTED DATA RATES
74	Channel 1	64 kbps
	Channel 2	64 kbps
7L	Channel 1	64 kbps, 128 kbps
	Channel 2	64 kbps, 128 kbps
7M	Channel 1	64 kbps, 128 kbps
	Channel 2	64 kbps, 128 kbps
7P	Channel 1	64 kbps, 128 kbps
	Channel 2	64 kbps, 128 kbps
7T	Channel 1	64 kbps, 128 kbps
7W	Channel 1	64 kbps, 128 kbps
	Channel 2	64 kbps, 128 kbps
7V	Channel 1	64 kbps, 128 kbps
	Channel 2	64 kbps, 128 kbps
2A	Channel 1	64 kbps
2B	Channel 1	64 kbps
	Channel 2	64 kbps
2G	Channel 1	128 kbps
2H	Channel 1	128 kbps
2I	Channel 1	64 kbps, 128 kbps
	Channel 2	64 kbps, 128 kbps
2J	Channel 1	64 kbps, 128 kbps
	Channel 2	64 kbps, 128 kbps
76	Channel 1	64 kbps
77	Channel 1	64 kbps
	Channel 2	64 kbps
75	Channel 1	64 kbps
	Channel 2	64 kbps
7E	Channel 1	64 kbps
	Channel 2	64 kbps
7F	Channel 1	64 kbps
	Channel 2	64 kbps
7G	Channel 1	64 kbps
	Channel 2	64 kbps
7Q	Channel 1	64 kbps
	Channel 2	64 kbps
7R	Channel 1	64 kbps
7S	Channel 1	64 kbps
	Channel 2	64 kbps

NOTE

The G.703 modules are fixed at 64 kbps. The **DIRECT I/O DATA RATE** setting is not applicable to these modules.

The **DIRECT I/O CHANNEL CROSSOVER** setting applies to G60s with dual-channel communication cards and allows crossing over messages from channel 1 to channel 2. This places all UR-series IEDs into one direct input and output network regardless of the physical media of the two communication channels.

The following application examples illustrate the basic concepts for direct input and output configuration. See the Inputs and Outputs section in this chapter for information on configuring FlexLogic operands (flags, bits) to be exchanged.

EXAMPLE 1: EXTENDING THE INPUT/OUTPUT CAPABILITIES OF A UR-SERIES RELAY

Consider an application that requires additional quantities of contact inputs or output contacts or lines of programmable logic that exceed the capabilities of a single UR-series chassis. The problem is solved by adding an extra UR-series IED, such as the C30, to satisfy the additional input and output and programmable logic requirements. The two IEDs are connected via single-channel digital communication cards as shown in the figure below.

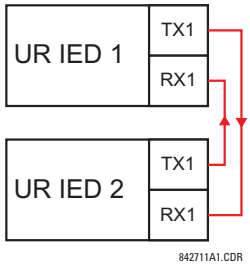

Figure 5–17: INPUT AND OUTPUT EXTENSION VIA DIRECT INPUTS AND OUTPUTS

In the above application, the following settings should be applied. For UR-series IED 1:

DIRECT OUTPUT DEVICE ID: "1"
DIRECT I/O CH1 RING CONFIGURATION: "Yes"
DIRECT I/O DATA RATE: "128 kbps"

For UR-series IED 2:

DIRECT OUTPUT DEVICE ID: "2"
DIRECT I/O CH1 RING CONFIGURATION: "Yes"
DIRECT I/O DATA RATE: "128 kbps"

The message delivery time is about 0.2 of power cycle in both ways (at 128 kbps); that is, from device 1 to device 2, and from device 2 to device 1. Different communications cards can be selected by the user for this back-to-back connection (for example: fiber, G.703, or RS422).

EXAMPLE 2: INTERLOCKING BUSBAR PROTECTION

A simple interlocking busbar protection scheme could be accomplished by sending a blocking signal from downstream devices, say 2, 3, and 4, to the upstream device that monitors a single incomer of the busbar, as shown below.

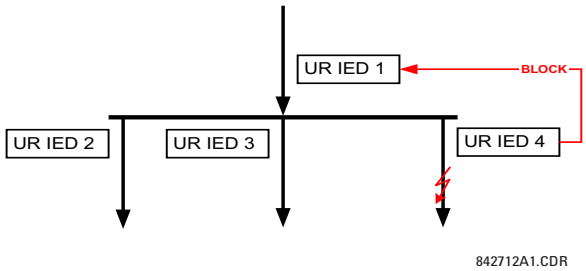

Figure 5–18: SAMPLE INTERLOCKING BUSBAR PROTECTION SCHEME

For increased reliability, a dual-ring configuration (shown below) is recommended for this application.

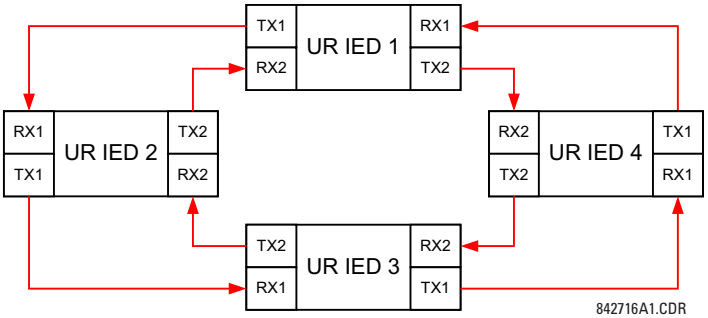

Figure 5–19: INTERLOCKING BUS PROTECTION SCHEME VIA DIRECT INPUTS/OUTPUTS

In the above application, the following settings should be applied. For UR-series IED 1:

DIRECT OUTPUT DEVICE ID: "1"
DIRECT I/O CH1 RING CONFIGURATION: "Yes"
DIRECT I/O CH2 RING CONFIGURATION: "Yes"

For UR-series IED 2:

DIRECT OUTPUT DEVICE ID: "2"
DIRECT I/O CH1 RING CONFIGURATION: "Yes"
DIRECT I/O CH2 RING CONFIGURATION: "Yes"

For UR-series IED 3:

DIRECT OUTPUT DEVICE ID: "3"
DIRECT I/O CH1 RING CONFIGURATION: "Yes"
DIRECT I/O CH2 RING CONFIGURATION: "Yes"

For UR-series IED 4:

DIRECT OUTPUT DEVICE ID: "4"
DIRECT I/O CH1 RING CONFIGURATION: "Yes"
DIRECT I/O CH2 RING CONFIGURATION: "Yes"

Message delivery time is approximately 0.2 of power system cycle (at 128 kbps) times number of 'bridges' between the origin and destination. Dual-ring configuration effectively reduces the maximum 'communications distance' by a factor of two.

In this configuration the following delivery times are expected (at 128 kbps) if both rings are healthy:

IED 1 to IED 2: 0.2 of power system cycle;
IED 1 to IED 3: 0.4 of power system cycle;
IED 1 to IED 4: 0.2 of power system cycle;
IED 2 to IED 3: 0.2 of power system cycle;
IED 2 to IED 4: 0.4 of power system cycle;
IED 3 to IED 4: 0.2 of power system cycle.

If one ring is broken (say TX2-RX2) the delivery times are as follows:

IED 1 to IED 2: 0.2 of power system cycle;
IED 1 to IED 3: 0.4 of power system cycle;
IED 1 to IED 4: 0.6 of power system cycle;
IED 2 to IED 3: 0.2 of power system cycle;
IED 2 to IED 4: 0.4 of power system cycle;
IED 3 to IED 4: 0.2 of power system cycle.

A coordinating timer for this bus protection scheme could be selected to cover the worst case scenario (0.4 of a power system cycle). Upon detecting a broken ring, the coordination time should be adaptively increased to 0.6 of a power system cycle. The complete application requires addressing a number of issues such as failure of both the communications rings, failure or out-of-service conditions of one of the relays, etc. Self-monitoring flags of the direct inputs and outputs feature would be primarily used to address these concerns.

EXAMPLE 3: PILOT-AIDED SCHEMES

Consider the three-terminal line protection application shown below:

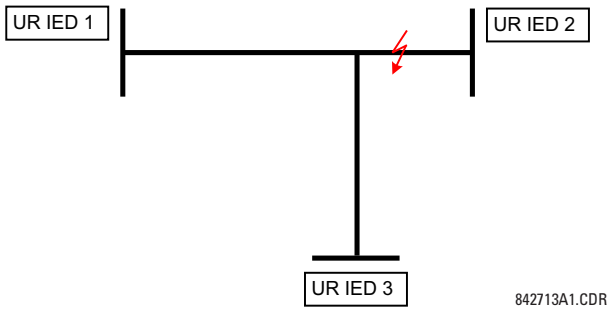

Figure 5–20: THREE-TERMINAL LINE APPLICATION

A permissive pilot-aided scheme could be implemented in a two-ring configuration as shown below (IEDs 1 and 2 constitute a first ring, while IEDs 2 and 3 constitute a second ring):

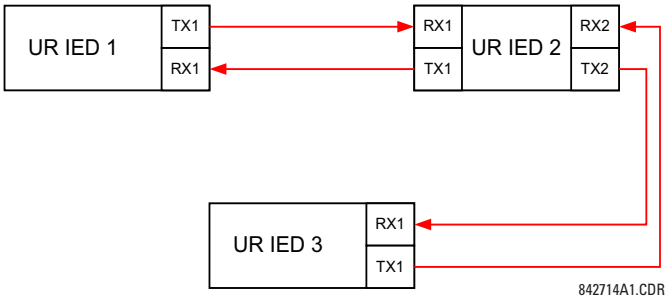

Figure 5–21: SINGLE-CHANNEL OPEN LOOP CONFIGURATION

In the above application, the following settings should be applied. For UR-series IED 1:

DIRECT OUTPUT DEVICE ID: "1"
DIRECT I/O CH1 RING CONFIGURATION: "Yes"
DIRECT I/O CH2 RING CONFIGURATION: "Yes"

For UR-series IED 2:

DIRECT OUTPUT DEVICE ID: "2"
DIRECT I/O CH1 RING CONFIGURATION: "Yes"
DIRECT I/O CH2 RING CONFIGURATION: "Yes"

For UR-series IED 3:

DIRECT OUTPUT DEVICE ID: "3"
DIRECT I/O CH1 RING CONFIGURATION: "Yes"
DIRECT I/O CH2 RING CONFIGURATION: "Yes"

In this configuration the following delivery times are expected (at 128 kbps):

IED 1 to IED 2: 0.2 of power system cycle;
IED 1 to IED 3: 0.5 of power system cycle;
IED 2 to IED 3: 0.2 of power system cycle.

In the above scheme, IEDs 1 and 3 do not communicate directly. IED 2 must be configured to forward the messages as explained in the Inputs and Outputs section. A blocking pilot-aided scheme should be implemented with more security and, ideally, faster message delivery time. This is accomplished using a dual-ring configuration as shown here.

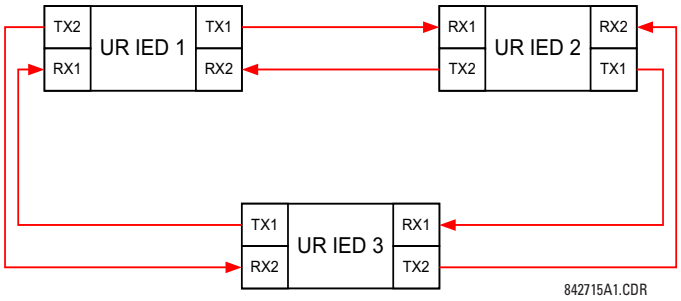

Figure 5–22: DUAL-CHANNEL CLOSED LOOP (DUAL-RING) CONFIGURATION

In the above application, the following settings should be applied. For UR-series IED 1:

DIRECT OUTPUT DEVICE ID: "1"
DIRECT I/O CH1 RING CONFIGURATION: "Yes"
DIRECT I/O CH2 RING CONFIGURATION: "Yes"

For UR-series IED 2:

DIRECT OUTPUT DEVICE ID: "2"
DIRECT I/O CH1 RING CONFIGURATION: "Yes"
DIRECT I/O CH2 RING CONFIGURATION: "Yes"

For UR-series IED 3:

DIRECT OUTPUT DEVICE ID: "3"
DIRECT I/O CH1 RING CONFIGURATION: "Yes"
DIRECT I/O CH2 RING CONFIGURATION: "Yes"

In this configuration the following delivery times are expected (at 128 kbps) if both the rings are healthy:

IED 1 to IED 2: 0.2 of power system cycle;
IED 1 to IED 3: 0.2 of power system cycle;
IED 2 to IED 3: 0.2 of power system cycle.

The two communications configurations could be applied to both permissive and blocking schemes. Speed, reliability and cost should be taken into account when selecting the required architecture.

b) CRC ALARM CH1(2)

PATH: SETTINGS ⇨ PRODUCT SETUP ⇨⇩ DIRECT I/O ⇨⇩ CRC ALARM CH1(2)

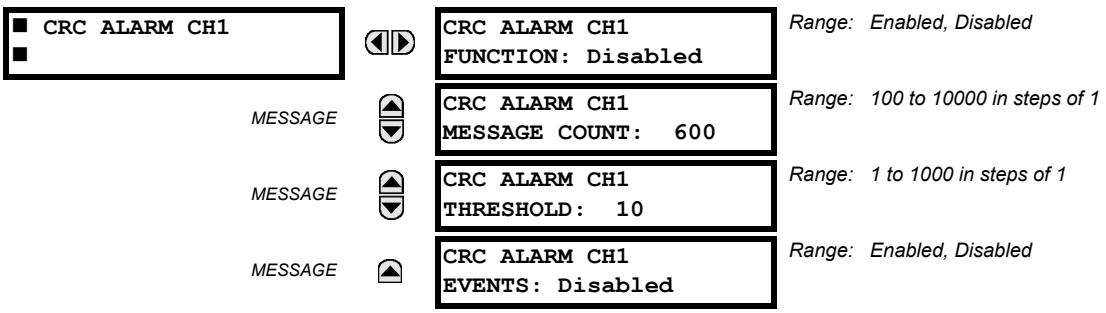

The G60 checks integrity of the incoming direct input and output messages using a 32-bit CRC. The CRC alarm function is available for monitoring the communication medium noise by tracking the rate of messages failing the CRC check. The monitoring function counts all incoming messages, including messages that failed the CRC check. A separate counter adds up messages that failed the CRC check. When the failed CRC counter reaches the user-defined level specified by the **CRC ALARM CH1 THRESHOLD** setting within the user-defined message count **CRC ALARM 1 CH1 COUNT**, the DIR IO CH1 CRC ALARM FlexLogic operand is set.

When the total message counter reaches the user-defined maximum specified by the **CRC ALARM CH1 MESSAGE COUNT** setting, both the counters reset and the monitoring process is restarted.

The operand shall be configured to drive an output contact, user-programmable LED, or selected communication-based output. Latching and acknowledging conditions - if required - should be programmed accordingly.

The CRC alarm function is available on a per-channel basis. The total number of direct input and output messages that failed the CRC check is available as the **ACTUAL VALUES** ⇨ **STATUS** ⇨⇩ **DIRECT INPUTS** ⇨⇩ **CRC FAIL COUNT CH1** actual value.

- *Message count and length of the monitoring window*: To monitor communications integrity, the relay sends 1 message per second (at 64 kbps) or 2 messages per second (128 kbps) even if there is no change in the direct outputs. For example, setting the **CRC ALARM CH1 MESSAGE COUNT** to "10000", corresponds a time window of about 160 minutes at 64 kbps and 80 minutes at 128 kbps. If the messages are sent faster as a result of direct outputs activity, the monitoring time interval will shorten. This should be taken into account when determining the **CRC ALARM CH1 MESSAGE COUNT** setting. For example, if the requirement is a maximum monitoring time interval of 10 minutes at 64 kbps, then the **CRC ALARM CH1 MESSAGE COUNT** should be set to $10 \times 60 \times 1 = 600$.
- *Correlation of failed CRC and bit error rate (BER)*: The CRC check may fail if one or more bits in a packet are corrupted. Therefore, an exact correlation between the CRC fail rate and the BER is not possible. Under certain assumptions an approximation can be made as follows. A direct input and output packet containing 20 bytes results in 160 bits of data being sent and therefore, a transmission of 63 packets is equivalent to 10,000 bits. A BER of 10^{-4} implies 1 bit error for every 10000 bits sent or received. Assuming the best case of only 1 bit error in a failed packet, having 1 failed packet for every 63 received is about equal to a BER of 10^{-4}.

c) UNRETURNED MESSAGES ALARM CH1(2)

PATH: SETTINGS ⇨ PRODUCT SETUP ⇨⇩ DIRECT I/O ⇨⇩ UNRETURNED MESSAGES ALARM CH1(2)

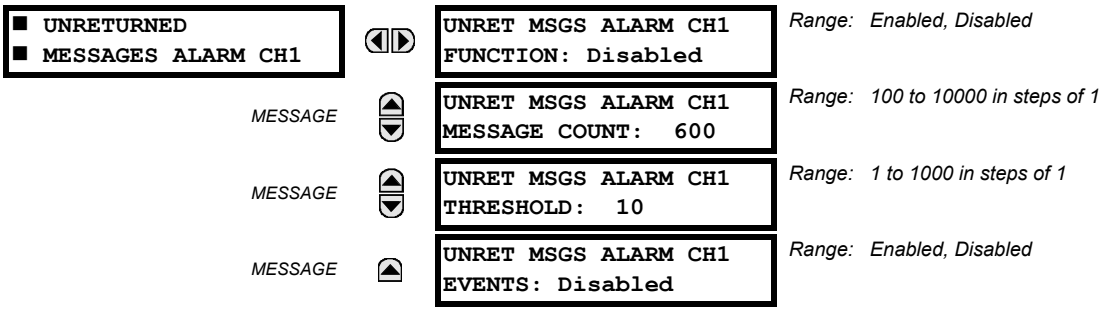

The G60 checks integrity of the direct input and output communication ring by counting unreturned messages. In the ring configuration, all messages originating at a given device should return within a pre-defined period of time. The unreturned messages alarm function is available for monitoring the integrity of the communication ring by tracking the rate of unreturned messages. This function counts all the outgoing messages and a separate counter adds the messages have failed to return. When the unreturned messages counter reaches the user-definable level specified by the **UNRET MSGS ALARM CH1 THRESHOLD** setting and within the user-defined message count **UNRET MSGS ALARM CH1 COUNT**, the DIR IO CH1 UNRET ALM FlexLogic operand is set.

When the total message counter reaches the user-defined maximum specified by the **UNRET MSGS ALARM CH1 MESSAGE COUNT** setting, both the counters reset and the monitoring process is restarted.

The operand shall be configured to drive an output contact, user-programmable LED, or selected communication-based output. Latching and acknowledging conditions, if required, should be programmed accordingly.

The unreturned messages alarm function is available on a per-channel basis and is active only in the ring configuration. The total number of unreturned input and output messages is available as the **ACTUAL VALUES** ⇨ **STATUS** ⇨⇩ **DIRECT INPUTS** ⇨⇩ **UNRETURNED MSG COUNT CH1** actual value.

5.2.17 TELEPROTECTION

PATH: SETTINGS ⇨ PRODUCT SETUP ⇨⇩ TELEPROTECTION

■ TELEPROTECTION ■		TELEPROTECTION FUNCTION: Disabled	Range: Disabled, Enabled
	MESSAGE	NUMBER OF TERMINALS: 2	Range: 2, 3
	MESSAGE	NUMBER OF COMM CHANNELS: 1	Range: 1, 2
	MESSAGE	LOCAL RELAY ID NUMBER: 0	Range: 0 to 255 in steps of 1
	MESSAGE	TERMINAL 1 RELAY ID NUMBER: 0	Range: 0 to 255 in steps of 1
	MESSAGE	TERMINAL 2 RELAY ID NUMBER: 0	Range: 0 to 255 in steps of 1

SOFTWARE OPTION

This option is available when an INTER-RELAY COMMUNICATIONS card is specified at the time of ordering. With the option, direct inputs/outputs display by default. When you enable the teleprotection feature, direct I/O is not visible.

5

Digital teleprotection functionality is designed to transfer protection commands between two or three relays in a secure, fast, dependable, and deterministic fashion. Possible applications are permissive or blocking pilot schemes and direct transfer trip (DTT). Teleprotection can be applied over any analog or digital channels and any communications media, such as direct fiber, copper wires, optical networks, or microwave radio links. A mixture of communication media is possible.

Once teleprotection is enabled and the teleprotection input/outputs are configured, data packets are transmitted continuously every 1/4 cycle (3/8 cycle if using C37.94 modules) from peer-to-peer. Security of communication channel data is achieved by using CRC-32 on the data packet.

NOTE

Teleprotection inputs/outputs and direct inputs/outputs are mutually exclusive – as such, they cannot be used simultaneously. Once teleprotection inputs and outputs are enabled, direct inputs and outputs are blocked, and *vice versa*.

- **NUMBER OF TERMINALS**: Specifies whether the teleprotection system operates between two peers or three peers.
- **NUMBER OF CHANNELS**: Specifies how many channels are used. If the **NUMBER OF TERMINALS** is “3” (three-terminal system), set the **NUMBER OF CHANNELS** to “2”. For a two-terminal system, the **NUMBER OF CHANNELS** can set to “1” or “2” (redundant channels).
- **LOCAL RELAY ID NUMBER**, **TERMINAL 1 RELAY ID NUMBER**, and **TERMINAL 2 RELAY ID NUMBER**: In installations that use multiplexers or modems, it is desirable to ensure that the data used by the relays protecting a given line is from the correct relays. The teleprotection function performs this check by reading the message ID sent by transmitting relays and comparing it to the programmed ID in the receiving relay. This check is also used to block inputs if inadvertently set to loopback mode or data is being received from a wrong relay by checking the ID on a received channel. If an incorrect ID is found on a channel during normal operation, the TELEPROT CH1 ID FAIL or TELEPROT CH2 ID FAIL FlexLogic operand is set, driving the event with the same name and blocking the teleprotection inputs. For commissioning purposes, the result of channel identification is also shown in the **STATUS ⇨⇩ CHANNEL TESTS ⇨⇩ VALIDITY OF CHANNEL CONFIGURATION** actual value. The default value of “0” for the **LOCAL RELAY ID NUMBER** indicates that relay ID is not to be checked. On two- terminals two-channel systems, the same **LOCAL RELAY ID NUMBER** is transmitted over both channels; as such, only the **TERMINAL 1 ID NUMBER** has to be programmed on the receiving end.

PATH: SETTINGS ⇨ PRODUCT SETUP ⇨⇩ INSTALLATION

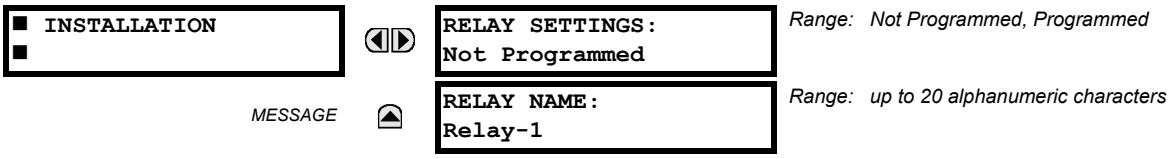

To safeguard against the installation of a relay without any entered settings, the unit will not allow signaling of any output relay until **RELAY SETTINGS** is set to "Programmed". This setting is defaulted to "Not Programmed" when at the factory. The **UNIT NOT PROGRAMMED** self-test error message is displayed until the relay is put into the "Programmed" state.

The **RELAY NAME** setting allows the user to uniquely identify a relay. This name will appear on generated reports.

5

5.3.1 REMOTE RESOURCES CONFIGURATION

When G60 is ordered with a process card module as a part of HardFiber system, then an additional **Remote Resources** menu tree is available in EnerVista UR Setup software to allow configuration of the HardFiber system.

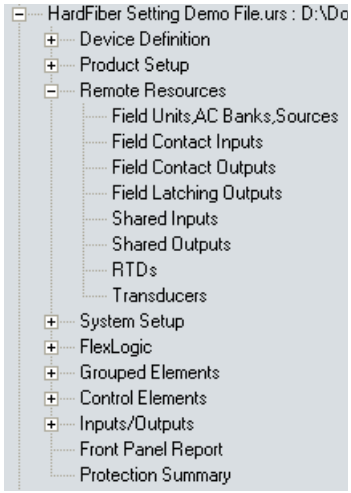

Figure 5–23: REMOTE RESOURCES CONFIGURATION MENU

The remote resources settings configure a G60 with a process bus module to work with HardFiber *Bricks*. Remote resources configuration is only available through the EnerVista UR Setup software, and is not available through the G60 front panel. A Brick provides eight AC measurements, along with contact inputs, DC analog inputs, and contact outputs, to be the remote interface to field equipment such as circuit breakers and transformers. The G60 with a process bus module has access to all of the capabilities of up to eight Bricks. Remote resources settings configure the point-to-point connection between specific fiber optic ports on the G60 process card and specific Brick. The relay is then configured to measure specific currents, voltages and contact inputs from those Bricks, and to control specific outputs.

The configuration process for remote resources is straightforward and consists of the following steps.

- *Configure the field units*. This establishes the point-to-point connection between a specific port on the relay process bus module, and a specific digital core on a specific Brick. This is a necessary first step in configuring a process bus relay.
- *Configure the AC banks*. This sets the primary and secondary quantities and connections for currents and voltages. AC bank configuration also provides a provision for redundant measurements for currents and voltages, a powerful reliability improvement possible with process bus.
- *Configure signal sources*. This functionality of the G60 has not changed other than the requirement to use currents and voltages established by AC bank configuration under the remote resources menu.
- *Configure field contact inputs, field contact outputs, RTDs, and transducers as required for the application's functionality*. These inputs and outputs are the physical interface to circuit breakers, transformers, and other equipment. They replace the traditional contact inputs and outputs located at the relay to virtually eliminate copper wiring.
- *Configure shared inputs and outputs as required for the application's functionality*. Shared inputs and outputs are distinct binary channels that provide high-speed protection quality signaling between relays through a Brick.

For additional information on how to configure a relay with a process bus module, see GE publication number GEK-113658: HardFiber Process Bus System Instruction Manual.

a) CURRENT BANKS

PATH: SETTINGS ⇨⇩ SYSTEM SETUP ⇨ AC INPUTS ⇨ CURRENT BANK F1(M5)

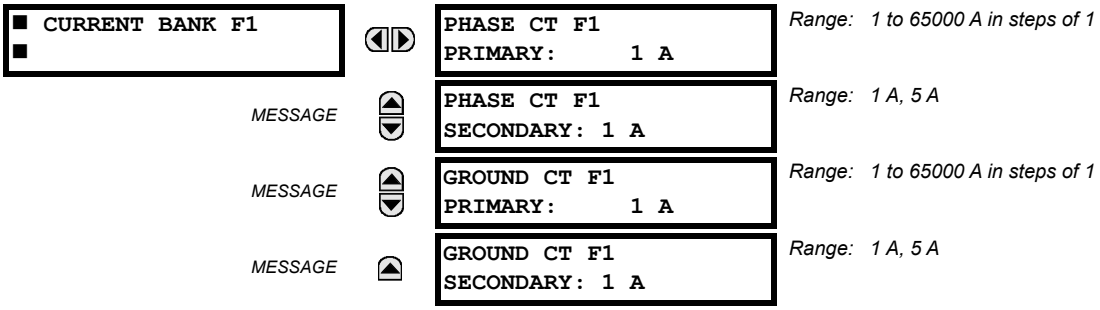

Because energy parameters are accumulated, record these values and then reset immediately prior to changing CT characteristics.

Four banks of phase and ground CTs can be set, where the current banks are denoted in the following format (*X* represents the module slot position letter):

Xa, where ***X*** = {**F**, **M**} and ***a*** = {**1**, **5**}

See the Introduction to AC Sources section at the beginning of this chapter for details.

These settings are critical for all features that have settings dependent on current measurements. When the relay is ordered, the CT module must be specified to include a standard or sensitive ground input. As the phase CTs are connected in wye (star), the calculated phasor sum of the three phase currents (IA + IB + IC = neutral current = 3I0) is used as the input for the neutral overcurrent elements. In addition, a zero-sequence (core balance) CT which senses current in all of the circuit primary conductors, or a CT in a neutral grounding conductor can also be used. For this configuration, the ground CT primary rating must be entered. To detect low level ground fault currents, the sensitive ground input can be used. In this case, the sensitive ground CT primary rating must be entered. Refer to chapter 3 for more details on CT connections.

Enter the rated CT primary current values. For both 1000:5 and 1000:1 CTs, the entry would be 1000. For correct operation, the CT secondary rating must match the setting (which must also correspond to the specific CT connections used).

The following example illustrates how multiple CT inputs (current banks) are summed as one source current. Given the following current banks:

- F1: CT bank with 500:1 ratio.
- F5: CT bank with 1000:1 ratio
- M1: CT bank with 800:1 ratio

The following rule applies:

$$\text{SRC 1} = \text{F1} + \text{F5} + \text{M1} \quad \textbf{(EQ 5.6)}$$

1 pu is the highest primary current. In this case, 1000 is entered and the secondary current from the 500:1 ratio CT will be adjusted to that created by a 1000:1 CT before summation. If a protection element is set up to act on SRC 1 currents, then a pickup level of 1 pu will operate on 1000 A primary.

The same rule applies for current sums from CTs with different secondary taps (5 A and 1 A).

b) VOLTAGE BANKS

PATH: SETTINGS ⇨⇩ SYSTEM SETUP ⇨ AC INPUTS ⇨⇩ VOLTAGE BANK F5(M5)

VOLTAGE BANK F5		PHASE VT F5 CONNECTION: Wye	Range: Wye, Delta
	MESSAGE	PHASE VT F5 SECONDARY: 66.4 V	Range: 25.0 to 240.0 V in steps of 0.1
	MESSAGE	PHASE VT F5 RATIO: 1.00 :1	Range: 1.00 to 24000.00 in steps of 0.01
	MESSAGE	AUXILIARY VT F5 CONNECTION: Vag	Range: Vn, Vag, Vbg, Vcg, Vab, Vbc, Vca
	MESSAGE	AUXILIARY VT F5 SECONDARY: 66.4 V	Range: 25.0 to 240.0 V in steps of 0.1
	MESSAGE	AUXILIARY VT F5 RATIO: 1.00 :1	Range: 1.00 to 24000.00 in steps of 0.01

Because energy parameters are accumulated, these values should be recorded and then reset immediately prior to changing VT characteristics.

Two banks of phase/auxiliary VTs can be set, where voltage banks are denoted in the following format (*X* represents the module slot position letter):

Xa, where ***X*** = {**F**, **M**} and ***a*** = {**5**}

See the Introduction to AC Sources section at the beginning of this chapter for details.

With VTs installed, the relay can perform voltage measurements as well as power calculations. Enter the **PHASE VT F5 CONNECTION** made to the system as "Wye" or "Delta". An open-delta source VT connection would be entered as "Delta".

NOTE

The nominal **PHASE VT F5 SECONDARY** voltage setting is the voltage across the relay input terminals when nominal voltage is applied to the VT primary.

For example, on a system with a 13.8 kV nominal primary voltage and with a 14400:120 volt VT in a delta connection, the secondary voltage would be 115; that is, (13800 / 14400) × 120. For a wye connection, the voltage value entered must be the phase to neutral voltage which would be $115 / \sqrt{3} = 66.4$.

On a 14.4 kV system with a delta connection and a VT primary to secondary turns ratio of 14400:120, the voltage value entered would be 120; that is, 14400 / 120.

5.4.2 POWER SYSTEM

PATH: SETTINGS ⇨⇩ SYSTEM SETUP ⇨⇩ POWER SYSTEM

POWER SYSTEM		NOMINAL FREQUENCY: 60 Hz	Range: 25 to 60 Hz in steps of 1
	MESSAGE	PHASE ROTATION: ABC	Range: ABC, ACB
	MESSAGE	REVERSE PH ROTATION: Off	Range: FlexLogic operand
	MESSAGE	FREQUENCY AND PHASE REFERENCE: SRC 1	Range: SRC 1, SRC 2, SRC 3, SRC 4
	MESSAGE	FREQUENCY TRACKING: Enabled	Range: Disabled, Enabled

The power system **NOMINAL FREQUENCY** value is used as a default to set the digital sampling rate if the system frequency cannot be measured from available signals. This may happen if the signals are not present or are heavily distorted. Before reverting to the nominal frequency, the frequency tracking algorithm holds the last valid frequency measurement for a safe period of time while waiting for the signals to reappear or for the distortions to decay. After changing this setting, restart the relay using **Maintenance > Reboot Relay Command**.

The phase sequence of the power system is required to properly calculate sequence components and power parameters. The **PHASE ROTATION** setting matches the power system phase sequence. Note that this setting informs the relay of the actual system phase sequence, either ABC or ACB. CT and VT inputs on the relay, labeled as A, B, and C, must be connected to system phases A, B, and C for correct operation.

The **REVERSE PH ROTATION** setting allows the user to dynamically change the phase rotation used for phasor calculations. This allows the Product to follow the current phase rotation of the protected generator. For example, if the **PHASE ROTATION** setting is “ABC” but the condition defined for opposite phase rotation is true, then the phase rotation used for phasor calculation switches to “ACB.” This feature is only intended for use in special applications, such as pumped storage schemes.

Typical application of using Reverse Phase Rotation is the pumped-storage hydroelectricity application. Water is pumped from a lower elevation reservoir to a higher elevation (pumping or motor mode) during the off-peak period when low-cost surplus electricity is available, and during periods of high electrical demand, the stored water is released through turbines to produce electricity (generator mode), where pump operation is realized through phase rotation reversal operation because the hydraulic units are designed to operate as turbines when rotating in one direction and as pumps when rotating in the opposite direction.

When the operand assigned to the **REVERSE PH ROTATION** setting is logical "0," the phase rotation is matching the one defined by the **PHASE ROTATION** setting, ABC for example. When this operand is logical "1," the phase rotation changes to the opposite, ACB for the same example. Note that after successful rotation switching, the next switching is allowed only after nine power cycles.

Typically, different relay setting groups are used to protect pumping operation mode and generating operation mode of the hydraulic units respectively, therefore the logic for switching setting groups can be directly used to control the **REVERSE PH ROTATION**.

Every time rotation change is performed, protection is blocked for three power cycles.

The **FREQUENCY AND PHASE REFERENCE** setting determines which signal source is used (and hence which AC signal) for phase angle reference. The AC signal used is prioritized based on the AC inputs that are configured for the signal source: phase voltages takes precedence, followed by auxiliary voltage, then phase currents, and finally ground current.

For three phase selection, phase A is used for angle referencing ($V_{\text{ANGLE REF}} = V_A$), while Clarke transformation of the phase signals is used for frequency metering and tracking ($V_{\text{FREQUENCY}} = (2V_A - V_B - V_C)/3$) for better performance during fault, open pole, and VT and CT fail conditions.

The phase reference and frequency tracking AC signals are selected based upon the Source configuration, regardless of whether or not a particular signal is actually applied to the relay.

Phase angle of the reference signal always displays zero degrees and all other phase angles are relative to this signal. If the pre-selected reference signal is not measurable at a given time, the phase angles are not referenced.

The phase angle referencing is done via a phase locked loop, which can synchronize independent UR-series relays if they have the same AC signal reference. This results in very precise correlation of phase angle indications between different UR-series relays.

NOTE

FREQUENCY TRACKING is set to **“**Disabled**”** only in unusual circumstances; consult the factory for special variable-frequency applications.

The frequency tracking feature functions only when the G60 is in the “Programmed” mode. If the G60 is “Not Programmed”, then metering values are available but can exhibit significant errors.

PATH: SETTINGS ⇨⇩ SYSTEM SETUP ⇨⇩ SIGNAL SOURCES ⇨ SOURCE 1(4)

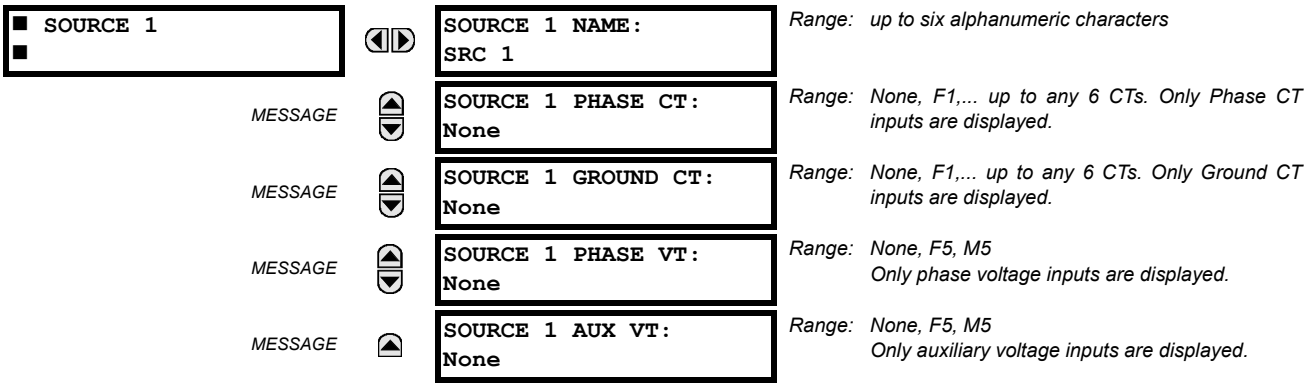

Identical menus are available for each source. The "SRC 1" text can be replaced by with a user-defined name appropriate for the associated source.

The first letter in the source identifier represents the module slot position. The number directly following this letter represents either the first bank of four channels (1, 2, 3, 4) called “1” or the second bank of four channels (5, 6, 7, 8) called “5” in a particular CT/VT module. See the Introduction to AC Sources section at the beginning of this chapter for details on this concept.

5

It is possible to select the sum of all CT combinations. The first channel displayed is the CT to which all others will be referred. For example, the selection “F1+F5” indicates the sum of each phase from channels “F1” and “F5”, scaled to whichever CT has the higher ratio. Selecting “None” hides the associated actual values.

The approach used to configure the AC sources consists of several steps; first step is to specify the information about each CT and VT input. For CT inputs, this is the nominal primary and secondary current. For VTs, this is the connection type, ratio and nominal secondary voltage. Once the inputs have been specified, the configuration for each source is entered, including specifying which CTs are summed together.

User selection of AC parameters for comparator elements:

CT/VT modules automatically calculate all current and voltage parameters from the available inputs. Users must select the specific input parameters to be measured by every element in the relevant settings menu. The internal design of the element specifies which type of parameter to use and provides a setting for source selection. In elements where the parameter may be either fundamental or RMS magnitude, such as phase time overcurrent, two settings are provided. One setting specifies the source, the second setting selects between fundamental phasor and RMS.

AC input actual values:

The calculated parameters associated with the configured voltage and current inputs are displayed in the current and voltage sections of actual values. Only the phasor quantities associated with the actual AC physical input channels will be displayed here. All parameters contained within a configured source are displayed in the sources section of the actual values.

DISTURBANCE DETECTORS (INTERNAL):

The disturbance detector (ANSI 50DD) element is a sensitive current disturbance detector that detects any disturbance on the protected system. The 50DD function is used directly in some elements in the relay, for example VT Fuse Failure detector or Fault Report. It can also be used to supervise current-based elements to prevent maloperation as a result of the wrong settings or external CT wiring problem. A disturbance detector is provided for each source.

The 50DD function responds to the changes in magnitude of the sequence currents. The disturbance detector scheme logic is as follows:

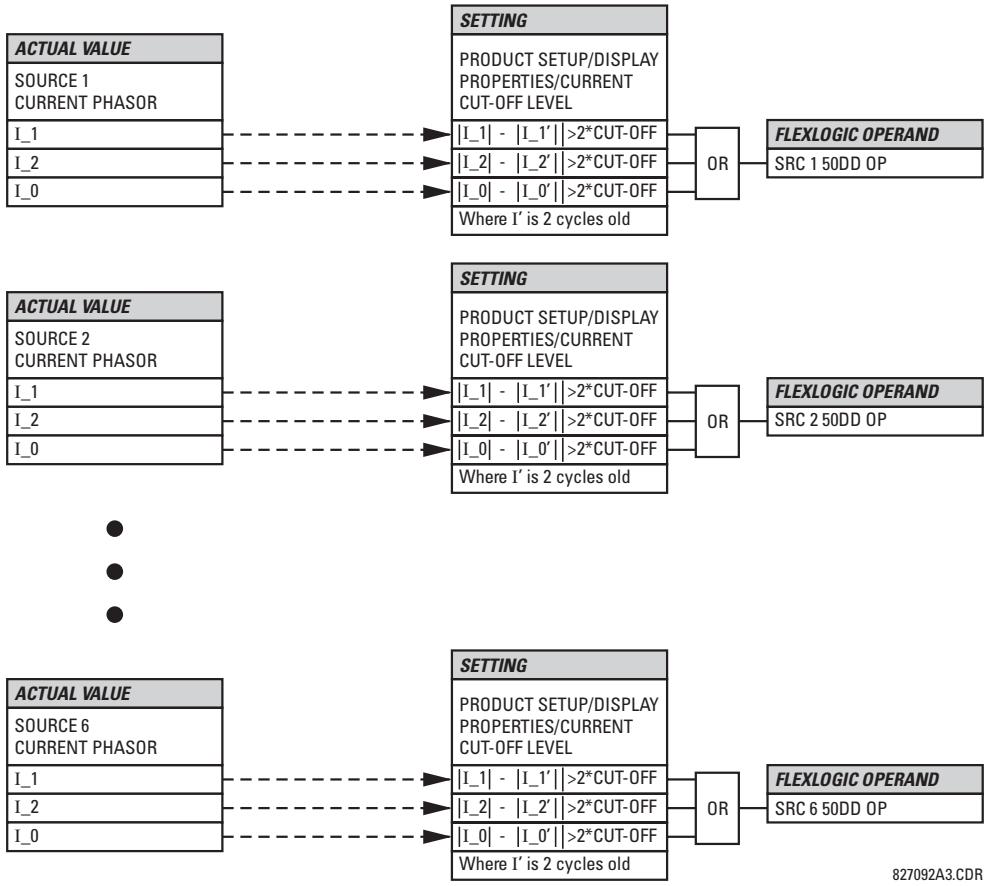

Figure 5–24: DISTURBANCE DETECTOR LOGIC DIAGRAM

The disturbance detector responds to the change in currents of twice the current cut-off level. The default cut-off threshold is 0.02 pu; thus by default the disturbance detector responds to a change of 0.04 pu. The metering sensitivity setting (**PRODUCT SETUP ⇨⇩ DISPLAY PROPERTIES ⇨⇩ CURRENT CUT-OFF LEVEL**) controls the sensitivity of the disturbance detector accordingly.

EXAMPLE USE OF SOURCES:

An example of the use of sources is shown in the diagram below. A relay could have the following hardware configuration:

INCREASING SLOT POSITION LETTER -->		
CT/VT MODULE 1	**CT/VT MODULE 2**	**CT/VT MODULE 3**
CTs	VTs	not applicable

This configuration could be used on a two-winding transformer, with one winding connected into a breaker-and-a-half system. The following figure shows the arrangement of sources used to provide the functions required in this application, and the CT/VT inputs that are used to provide the data.

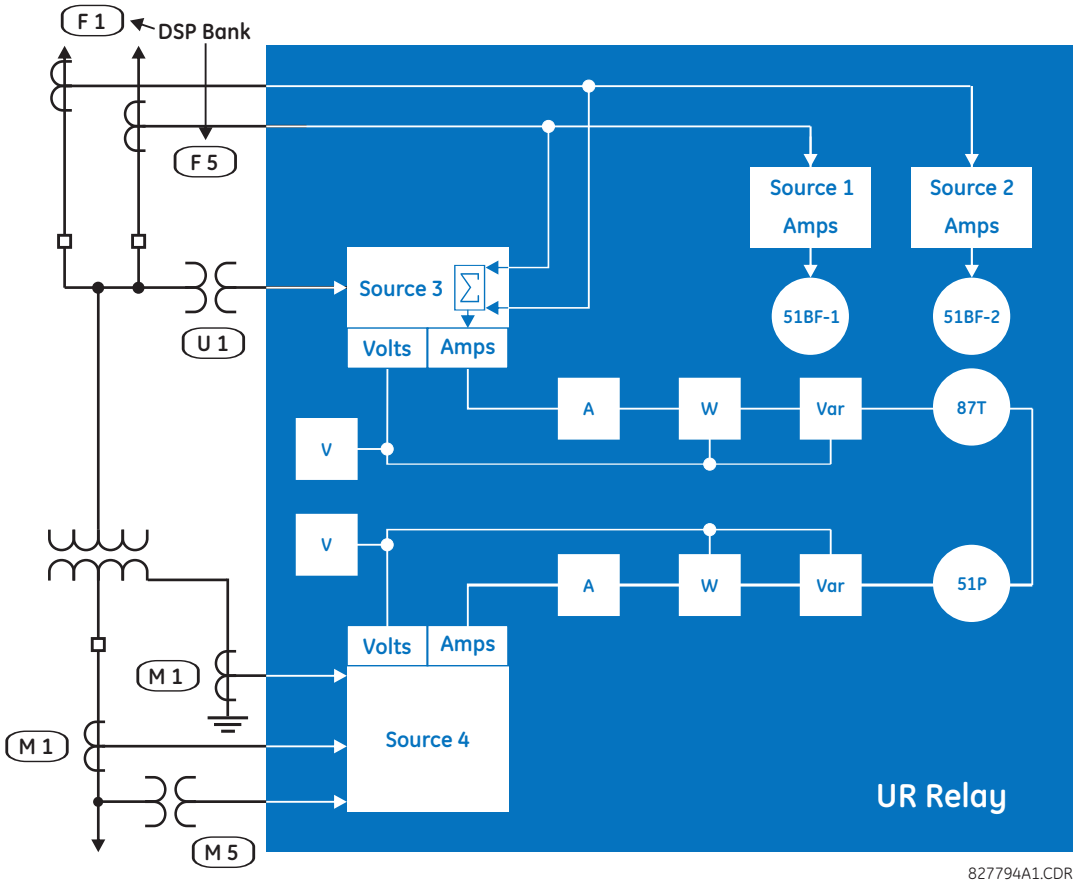

Figure 5–25: EXAMPLE USE OF SOURCES

	Y LV	D HV	AUX
	SRC 1	SRC 2	SRC 3
Phase CT	M1	F1+F5	None
Ground CT	M1	None	None
Phase VT	M5	None	None
Aux VT	None	None	U1

PATH: SETTINGS ⇨⇩ SYSTEM SETUP ⇨⇩ BREAKERS ⇨ BREAKER 1(4)

■ BREAKER 1 ■		BREAKER 1 FUNCTION: Disabled	Range: Disabled, Enabled
	MESSAGE	BREAKER1 PUSH BUTTON CONTROL: Disabled	Range: Disabled, Enabled
	MESSAGE	BREAKER 1 NAME: Bkr 1	Range: up to 6 alphanumeric characters
	MESSAGE	BREAKER 1 MODE: 3-Pole	Range: 3-Pole, 1-Pole
	MESSAGE	BREAKER 1 OPEN: Off	Range: FlexLogic operand
	MESSAGE	BREAKER 1 BLK OPEN: Off	Range: FlexLogic operand
	MESSAGE	BREAKER 1 CLOSE: Off	Range: FlexLogic operand
	MESSAGE	BREAKER 1 BLK CLOSE: Off	Range: FlexLogic operand
	MESSAGE	BREAKER1 ΦA/3P CLSD: Off	Range: FlexLogic operand
	MESSAGE	BREAKER1 ΦA/3P OPND: Off	Range: FlexLogic operand
	MESSAGE	BREAKER 1 ΦB CLOSED: Off	Range: FlexLogic operand
	MESSAGE	BREAKER 1 ΦB OPENED: Off	Range: FlexLogic operand
	MESSAGE	BREAKER 1 ΦC CLOSED: Off	Range: FlexLogic operand
	MESSAGE	BREAKER 1 ΦC OPENED: Off	Range: FlexLogic operand
	MESSAGE	BREAKER 1 Toperate: 0.070 s	Range: 0.000 to 65.535 s in steps of 0.001
	MESSAGE	BREAKER 1 EXT ALARM: Off	Range: FlexLogic operand
	MESSAGE	BREAKER 1 ALARM DELAY: 0.000 s	Range: 0.000 to 65.535 s in steps of 0.001
	MESSAGE	MANUAL CLOSE RECAL1 TIME: 0.000 s	Range: 0.000 to 65.535 s in steps of 0.001
	MESSAGE	BREAKER 1 OUT OF SV: Off	Range: FlexLogic operand
	MESSAGE	BREAKER 1 EVENTS: Disabled	Range: Disabled, Enabled

A description of the operation of the breaker control and status monitoring features is provided in chapter 4. Only information concerning programming of the associated settings is covered here. These features are provided for two or more breakers; a user may use only those portions of the design relevant to a single breaker, which must be breaker 1.

The number of breaker control elements is dependent on the number of CT/VT modules specified with the G60. The following settings are available for each breaker control element.

- **BREAKER 1 FUNCTION:** This setting enables and disables the operation of the breaker control feature.
- **BREAKER1 PUSH BUTTON CONTROL:** Set to "Enable" to allow faceplate push button operations.
- **BREAKER 1 NAME:** Assign a user-defined name (up to six characters) to the breaker. This name will be used in flash messages related to breaker 1.
- **BREAKER 1 MODE:** This setting selects "3-Pole" mode, where all breaker poles are operated simultaneously, or "1-Pole" mode where all breaker poles are operated either independently or simultaneously.
- **BREAKER 1 OPEN:** This setting selects an operand that creates a programmable signal to operate an output relay to open breaker 1.
- **BREAKER 1 BLK OPEN**: This setting selects an operand that prevents opening of the breaker. This setting can be used for select-before-operate functionality or to block operation from a panel switch or from SCADA.
- **BREAKER 1 CLOSE:** This setting selects an operand that creates a programmable signal to operate an output relay to close breaker 1.
- **BREAKER 1 BLK CLOSE**: This setting selects an operand that prevents closing of the breaker. This setting can be used for select-before-operate functionality or to block operation from a panel switch or from SCADA.
- **BREAKER1 ΦA/3P CLOSED:** This setting selects an operand, usually a contact input connected to a breaker auxiliary position tracking mechanism. This input should be a normally-open 52/a status input to create a logic 1 when the breaker is closed. If the **BREAKER 1 MODE** setting is selected as "3-Pole", this setting selects a single input as the operand used to track the breaker open or closed position. If the mode is selected as "1-Pole", the input mentioned above is used to track phase A and the **BREAKER 1 ΦB** and **BREAKER 1 ΦC** settings select operands to track phases B and C, respectively.
- **BREAKER1 ΦA/3P OPND:** This setting selects an operand, usually a contact input, that should be a normally-closed 52/b status input to create a logic 1 when the breaker is open. If a separate 52/b contact input is not available, then the inverted BREAKER 1 CLOSED status signal can be used.
- **BREAKER 1 ΦB CLOSED:** If the mode is selected as three-pole, this setting has no function. If the mode is selected as single-pole, this input is used to track the breaker phase B closed position as above for phase A.
- **BREAKER 1 ΦB OPENED:** If the mode is selected as three-pole, this setting has no function. If the mode is selected as single-pole, this input is used to track the breaker phase B opened position as above for phase A.
- **BREAKER 1 ΦC CLOSED:** If the mode is selected as three-pole, this setting has no function. If the mode is selected as single-pole, this input is used to track the breaker phase C closed position as above for phase A.
- **BREAKER 1 ΦC OPENED:** If the mode is selected as three-pole, this setting has no function. If the mode is selected as single-pole, this input is used to track the breaker phase C opened position as above for phase A.
- **BREAKER 1 TOPERATE**: This setting specifies the required interval to overcome transient disagreement between the 52/a and 52/b auxiliary contacts during breaker operation. If transient disagreement still exists after this time has expired, the BREAKER 1 BAD STATUS FlexLogic operand is asserted from alarm or blocking purposes.
- **BREAKER 1 EXT ALARM:** This setting selects an operand, usually an external contact input, connected to a breaker alarm reporting contact.
- **BREAKER 1 ALARM DELAY:** This setting specifies the delay interval during which a disagreement of status among the three-pole position tracking operands will not declare a pole disagreement. This allows for non-simultaneous operation of the poles.
- **MANUAL CLOSE RECAL1 TIME:** This setting specifies the interval required to maintain setting changes in effect after an operator has initiated a manual close command to operate a circuit breaker.
- **BREAKER 1 OUT OF SV:** Selects an operand indicating that breaker 1 is out-of-service.

NOTE

IEC 61850 functionality is permitted when the G60 is in "Programmed" mode and not in the local control mode.

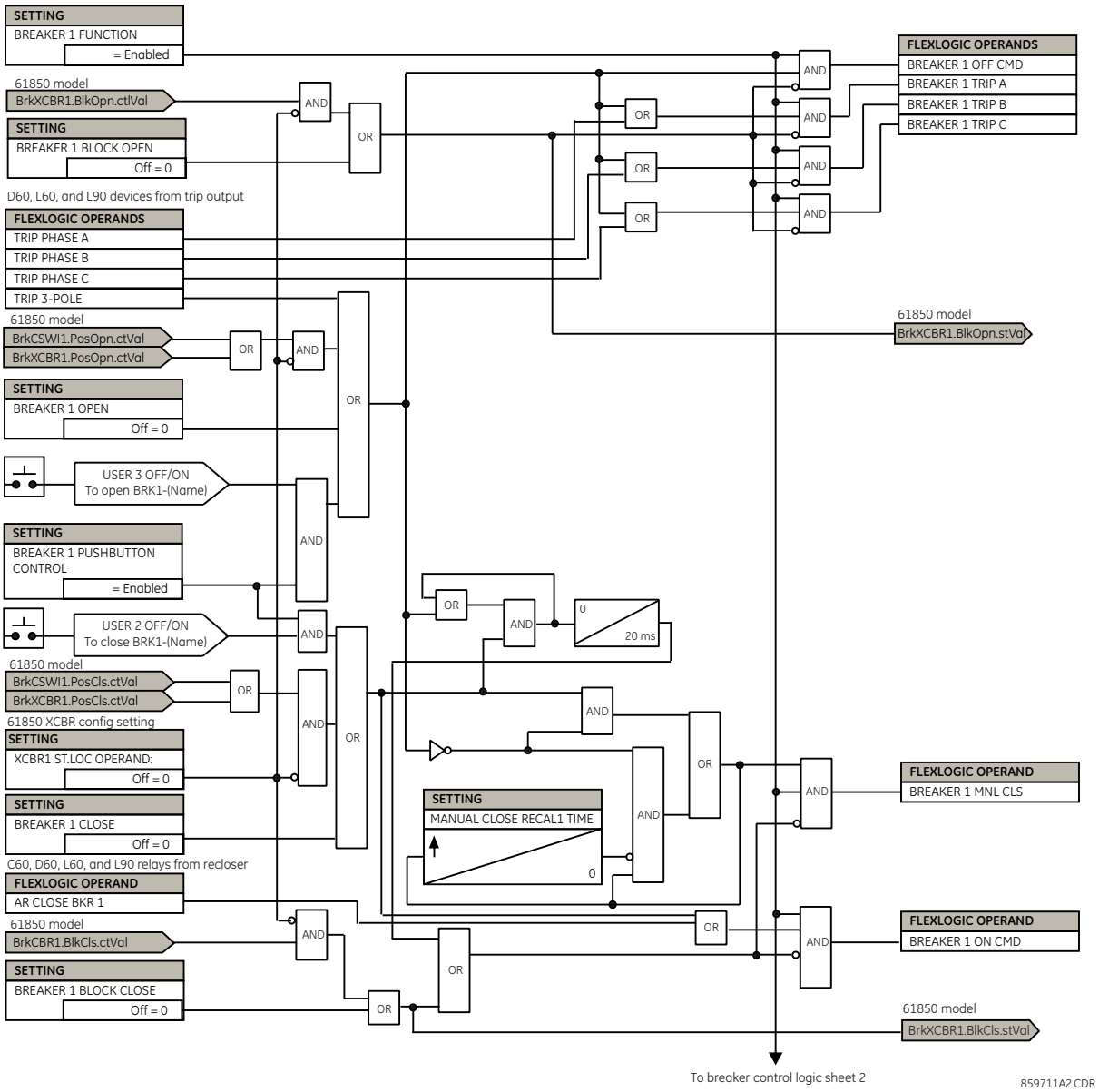

Figure 5–26: DUAL BREAKER CONTROL SCHEME LOGIC (Sheet 1 of 2)

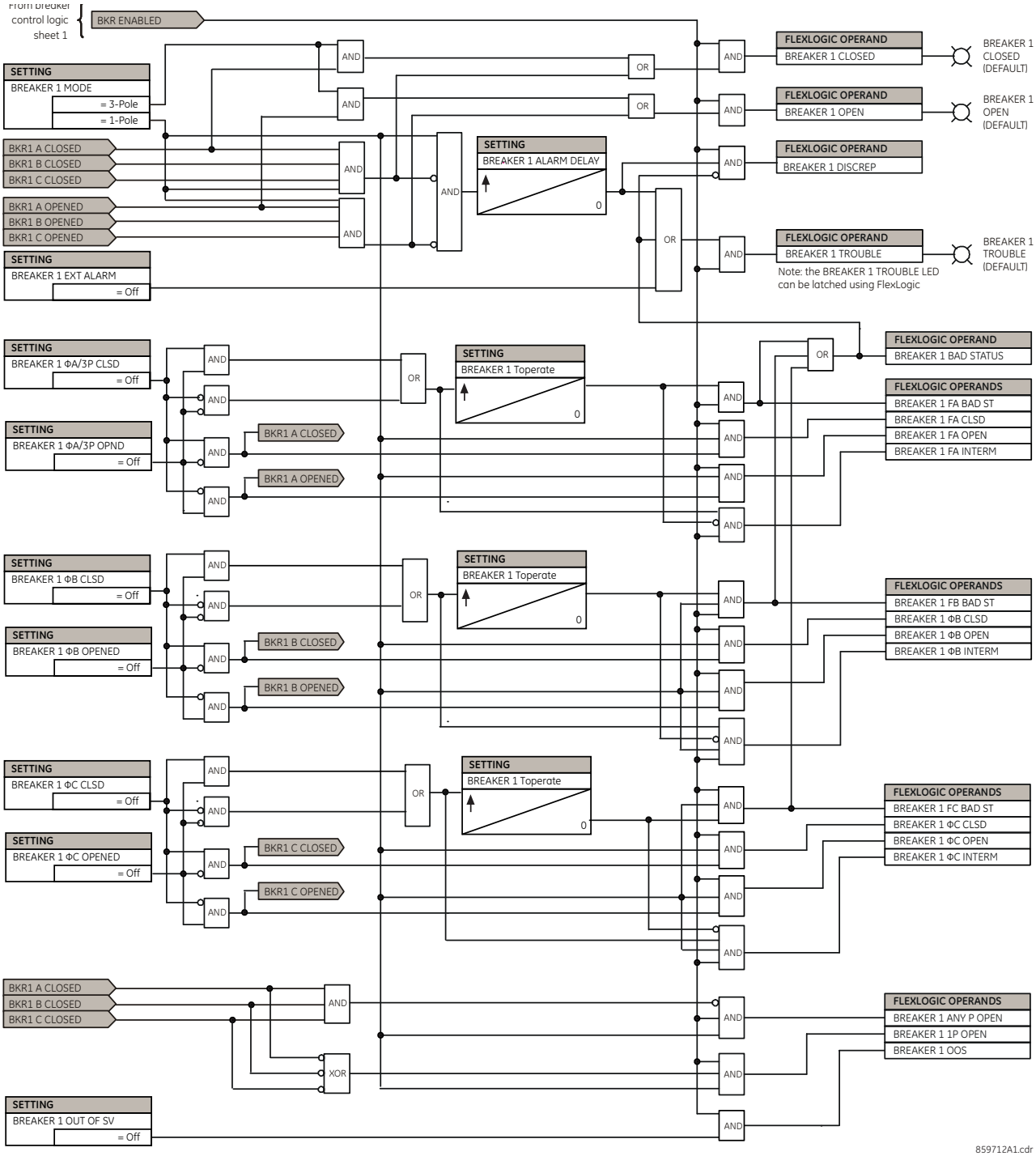

Figure 5–27: DUAL BREAKER CONTROL SCHEME LOGIC (Sheet 2 of 2)

The breaker element has direct hard-coded connections to IEC 61850 model as shown in the logic diagram. This allows remote open/close operation of each breaker, using either CSWI or XCBR IEC 61850 logical nodes. IEC 61850 select-before-operate functionality, local/remote switch functionality along with a blocking of open/close commands are provided. Note that IEC 61850 commands are event-driven and dwell time for these is one protection pass only. If you want to maintain the close/open command for a certain time, do so either on the contact outputs using the "Seal-in" setting or in FlexLogic.

PATH: SETTINGS ⇨⇩ SYSTEM SETUP ⇨⇩ SWITCHES ⇨ SWITCH 1(16)

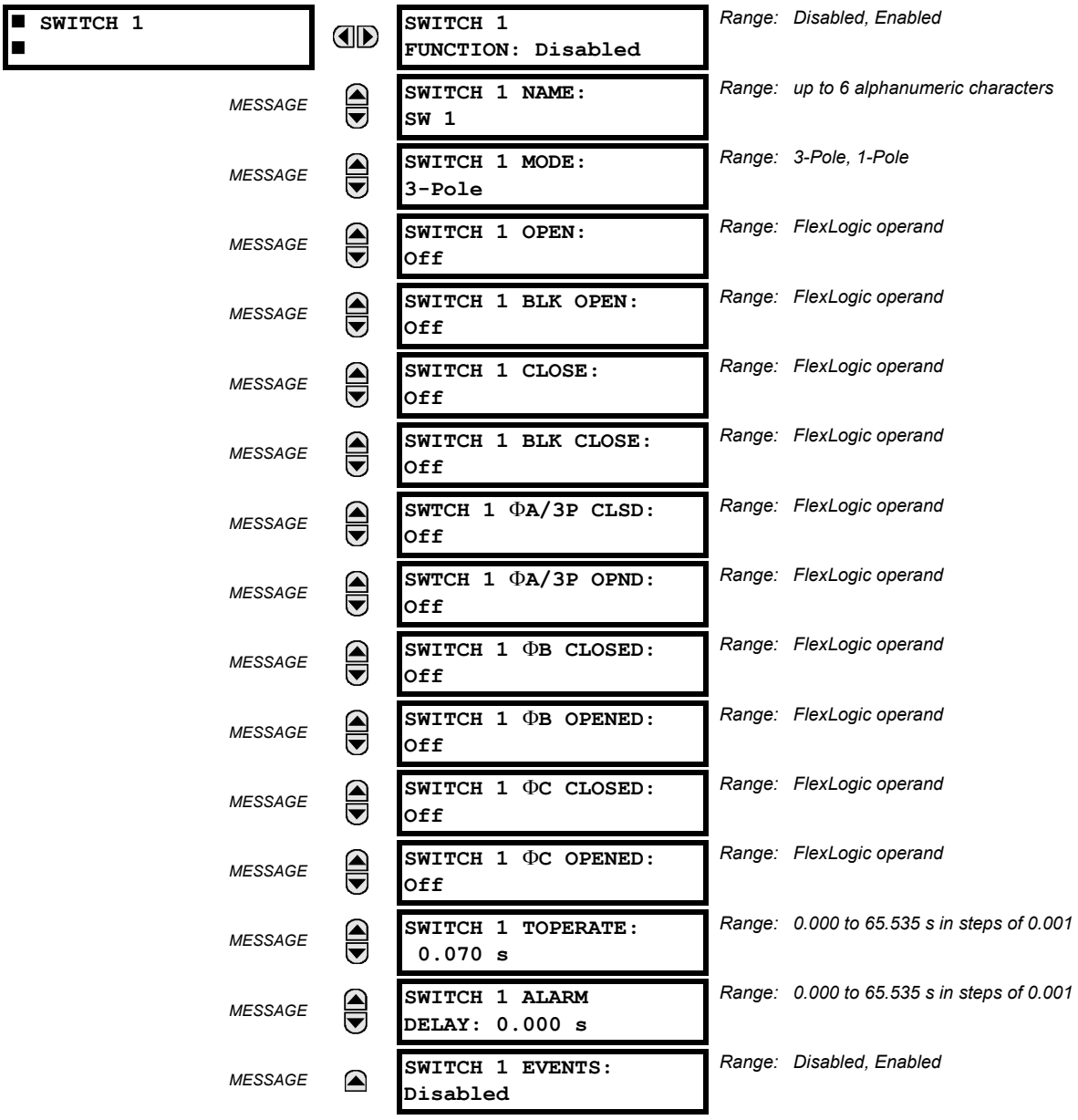

The disconnect switch control element contains the auxiliary logic for status and serves as the interface for opening and closing of disconnect switches from SCADA or through the front panel interface. The disconnect switch control element can be used to create interlocking functionality. For greater security in determination of the switch pole position, both the 89/a and 89/b auxiliary contacts are used with reporting of the discrepancy between them. The number of available disconnect switches is four per breaker.

To use this element, configure the contact outputs that open and close the disconnect switch to use FlexLogic operands SWITCH 1 OFF CMD and SWITCH 1 ON CMD, and configure the disconnect switch control element's inputs as outlined here.

- **SWITCH 1 FUNCTION:** This setting enables and disables the operation of the disconnect switch element.
- **SWITCH 1 NAME:** Assign a user-defined name (up to six characters) to the disconnect switch. This name will be used in flash messages related to disconnect switch 1.

- **SWITCH 1 MODE:** This setting selects "3-Pole" mode, where disconnect switch poles have a single common auxiliary switch, or "1-Pole" mode where each disconnect switch pole has its own auxiliary switch.
- **SWITCH 1 OPEN:** This setting selects an operand that when activated, and unless blocked, initiates the disconnect switch 1 open command.
- **SWITCH 1 BLK OPEN**: This setting selects an operand that prevents initiation of the disconnect switch 1 command. This setting can be used for blocking disconnect switch opening for instance when switchyard monitoring indicates current exceeding the switch's interrupting rating can be flowing through the switch.
- **SWITCH 1 CLOSE:** This setting selects an operand that when activated, and unless blocked, initiates the disconnect switch 1 close command.
- **SWITCH 1 BLK CLOSE**: This setting selects an operand that prevents initiation of disconnect switch 1 close commands. This setting can be used for blocking disconnect switch closing, for instance to prevent closing into a closed ground switch.
- **SWTCH 1 ΦA/3P CLSD:** This setting selects an operand, usually a contact input connected to a disconnect switch auxiliary position tracking mechanism. This input is for a normally-open 89/a status input that creates a logic 1 when the disconnect switch is closed. If the **SWITCH 1 MODE** setting is selected as "3-Pole", this setting selects a single 89/a input as the operand used to track the disconnect switch open or closed position. If the mode is selected as "1-Pole", the input mentioned above is used to track phase A and the **SWITCH 1 ΦB** and **SWITCH 1 ΦC** settings select operands to track phases B and C, respectively.
- **SWTCH 1 ΦA/3P OPND:** This setting selects an operand, usually a contact input, that is for a normally-closed 89/b status input that creates a logic 1 when the disconnect switch is open. If a separate 89/b contact input is not available, then an inverted 89/a status signal can be used.
- **SWITCH 1 ΦB CLOSED:** If the mode is selected as three-pole, this setting has no function. If the mode is selected as single-pole, this input is used to track the disconnect switch phase B closed position as above for phase A.
- **SWITCH 1 ΦB OPENED:** If the mode is selected as three-pole, this setting has no function. If the mode is selected as single-pole, this input is used to track the disconnect switch phase B opened position as above for phase A.
- **SWITCH 1 ΦC CLOSED:** If the mode is selected as three-pole, this setting has no function. If the mode is selected as single-pole, this input is used to track the disconnect switch phase C closed position as above for phase A.
- **SWITCH 1 ΦC OPENED:** If the mode is selected as three-pole, this setting has no function. If the mode is selected as single-pole, this input is used to track the disconnect switch phase C opened position as above for phase A.
- **SWITCH 1 TOPERATE**: This setting specifies the required interval to overcome transient disagreement between the 89/a and 89/b auxiliary contacts during disconnect switch operation. If transient disagreement still exists after this time has expired, the SWITCH 1 BAD STATUS FlexLogic operand is asserted for alarm or blocking purposes.
- **SWITCH 1 ALARM DELAY:** This setting specifies the delay interval during which a disagreement of status among the pole position tracking operands will not declare a pole disagreement. This allows for non-simultaneous operation of the poles.

NOTE

IEC 61850 functionality is permitted when the G60 is in "Programmed" mode and not in the local control mode.

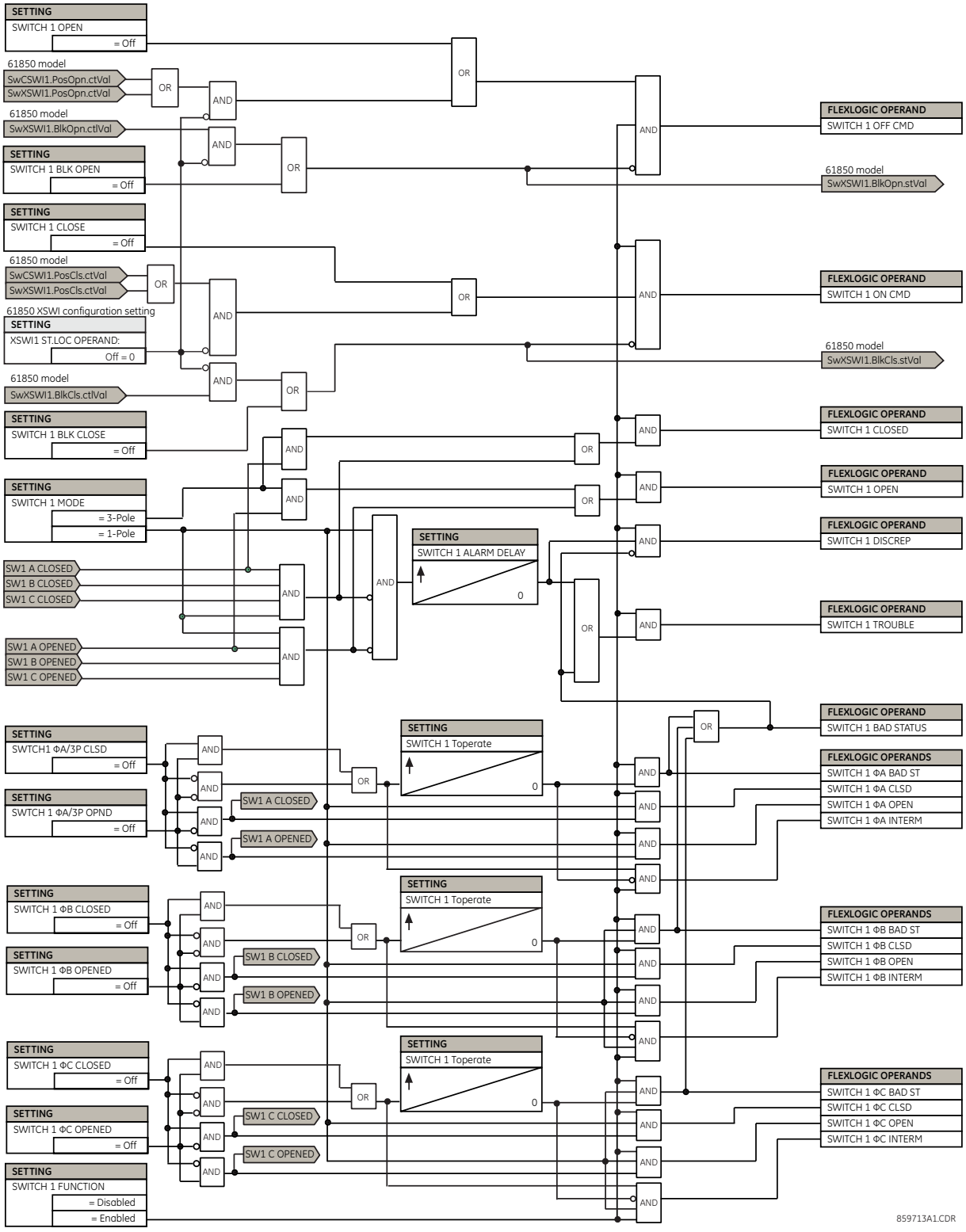

Figure 5–28: DISCONNECT SWITCH SCHEME LOGIC

The switch element has direct hard-coded connections to IEC 61850 model as shown in the logic diagram. This allows remote open/close operation of each switch, using either CSWI or XSWI IEC 61850 logical nodes. IEC 61850 select-before-operate functionality, local/remote switch functionality along with a blocking open/close commands are provided. Note that IEC 61850 commands are event-driven and dwell time for these is one protection pass only. If you want to maintain close/open command for a certain time, do so either on the contact outputs using the "Seal-in" setting or in FlexLogic.

5.4.6 FLEXCURVES

a) SETTINGS

PATH: SETTINGS ⇨⇩ SYSTEM SETUP ⇨⇩ FLEXCURVES ⇨ FLEXCURVE A(D)

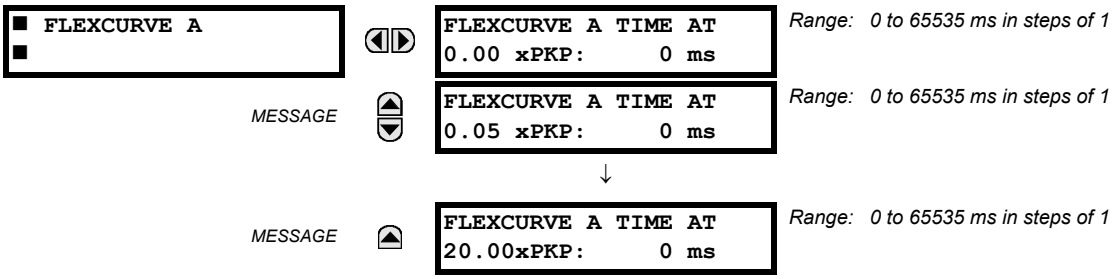

FlexCurves A through D have settings for entering times to reset and operate at the following pickup levels: 0.00 to 0.98 and 1.03 to 20.00. This data is converted into two continuous curves by linear interpolation between data points. To enter a custom FlexCurve, enter the reset and operate times (using the VALUE keys) for each selected pickup point (using the MESSAGE UP/DOWN keys) for the desired protection curve (A, B, C, or D).

Table 5–13: FLEXCURVE TABLE

RESET	TIME MS	RESET	TIME MS	OPERATE	TIME MS	OPERATE	TIME MS	OPERATE	TIME MS	OPERATE	TIME MS
0.00		0.68		1.03		2.9		4.9		10.5	
0.05		0.70		1.05		3.0		5.0		11.0	
0.10		0.72		1.1		3.1		5.1		11.5	
0.15		0.74		1.2		3.2		5.2		12.0	
0.20		0.76		1.3		3.3		5.3		12.5	
0.25		0.78		1.4		3.4		5.4		13.0	
0.30		0.80		1.5		3.5		5.5		13.5	
0.35		0.82		1.6		3.6		5.6		14.0	
0.40		0.84		1.7		3.7		5.7		14.5	
0.45		0.86		1.8		3.8		5.8		15.0	
0.48		0.88		1.9		3.9		5.9		15.5	
0.50		0.90		2.0		4.0		6.0		16.0	
0.52		0.91		2.1		4.1		6.5		16.5	
0.54		0.92		2.2		4.2		7.0		17.0	
0.56		0.93		2.3		4.3		7.5		17.5	
0.58		0.94		2.4		4.4		8.0		18.0	
0.60		0.95		2.5		4.5		8.5		18.5	
0.62		0.96		2.6		4.6		9.0		19.0	
0.64		0.97		2.7		4.7		9.5		19.5	
0.66		0.98		2.8		4.8		10.0		20.0	

NOTE

The relay using a given FlexCurve applies linear approximation for times between the user-entered points. Special care must be applied when setting the two points that are close to the multiple of pickup of 1; that is, 0.98 pu and 1.03 pu. It is recommended to set the two times to a similar value; otherwise, the linear approximation may result in undesired behavior for the operating quantity that is close to 1.00 pu.

b) FLEXCURVE CONFIGURATION WITH ENERVISTA UR SETUP

The EnerVista UR Setup software allows for easy configuration and management of FlexCurves and their associated data points. Prospective FlexCurves can be configured from a selection of standard curves to provide the best approximate fit, then specific data points can be edited afterwards. Alternately, curve data can be imported from a specified file (.csv format) by selecting the **Import Data From** EnerVista UR Setup setting.

Curves and data can be exported, viewed, and cleared by clicking the appropriate buttons. FlexCurves are customized by editing the operating time (ms) values at pre-defined per-unit current multiples. Note that the pickup multiples start at zero (implying the "reset time"), operating time below pickup, and operating time above pickup.

c) RECLOSER CURVE EDITING

Recloser curve selection is special in that recloser curves can be shaped into a composite curve with a minimum response time and a fixed time above a specified pickup multiples. There are 41 recloser curve types supported. These definite operating times are useful to coordinate operating times, typically at higher currents and where upstream and downstream pro-

tective devices have different operating characteristics. The recloser curve configuration window shown below appears when the Initialize From EnerVista UR Setup setting is set to “Recloser Curve” and the **Initialize FlexCurve** button is clicked.

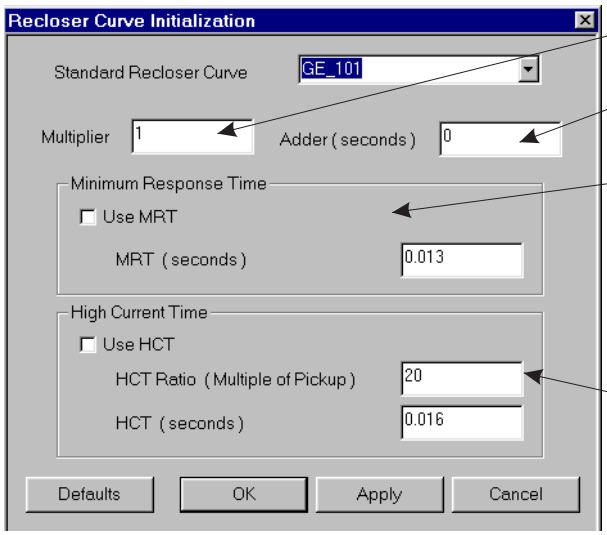

Multiplier: Scales (multiplies) the curve operating times

Addr: Adds the time specified in this field (in ms) to each *curve* operating time value.

Minimum Response Time (MRT): If enabled, the MRT setting defines the shortest operating time even if the curve suggests a shorter time at higher current multiples. A composite operating characteristic is effectively defined. For current multiples lower than the intersection point, the curve dictates the operating time; otherwise, the MRT does. An information message appears when attempting to apply an MRT shorter than the minimum curve time.

High Current Time: Allows the user to set a pickup multiple from which point onwards the operating time is fixed. This is normally only required at higher current levels. The **HCT Ratio** defines the high current pickup multiple; the **HCT** defines the operating time.

842721A1.CDR

Figure 5–29: RECLOSER CURVE INITIALIZATION

NOTE

The multiplier and adder settings only affect the curve portion of the characteristic and not the MRT and HCT settings. The HCT settings override the MRT settings for multiples of pickup greater than the HCT ratio.

d) EXAMPLE

A composite curve can be created from the GE_111 standard with MRT = 200 ms and HCT initially disabled and then enabled at eight times pickup with an operating time of 30 ms. At approximately four times pickup, the curve operating time is equal to the MRT and from then onwards the operating time remains at 200 ms (see below).

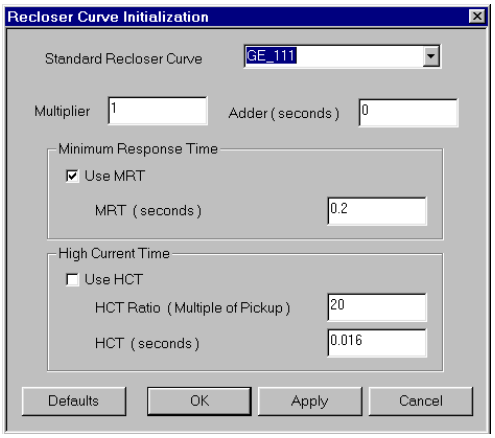

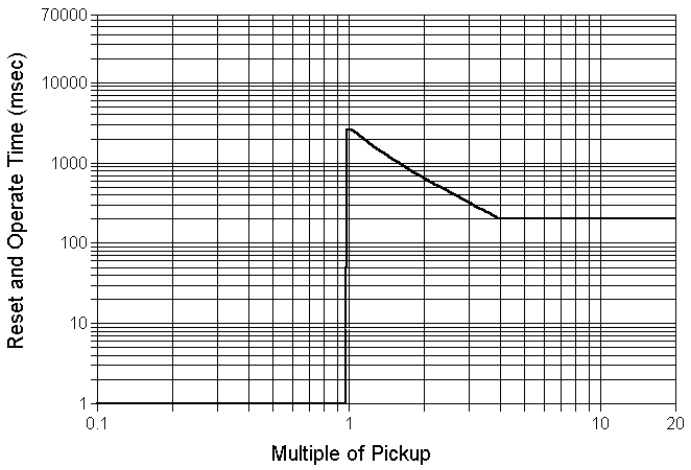

842719A1.CDR

Figure 5–30: COMPOSITE RECLOSER CURVE WITH HCT DISABLED

With the HCT feature enabled, the operating time reduces to 30 ms for pickup multiples exceeding eight times pickup.

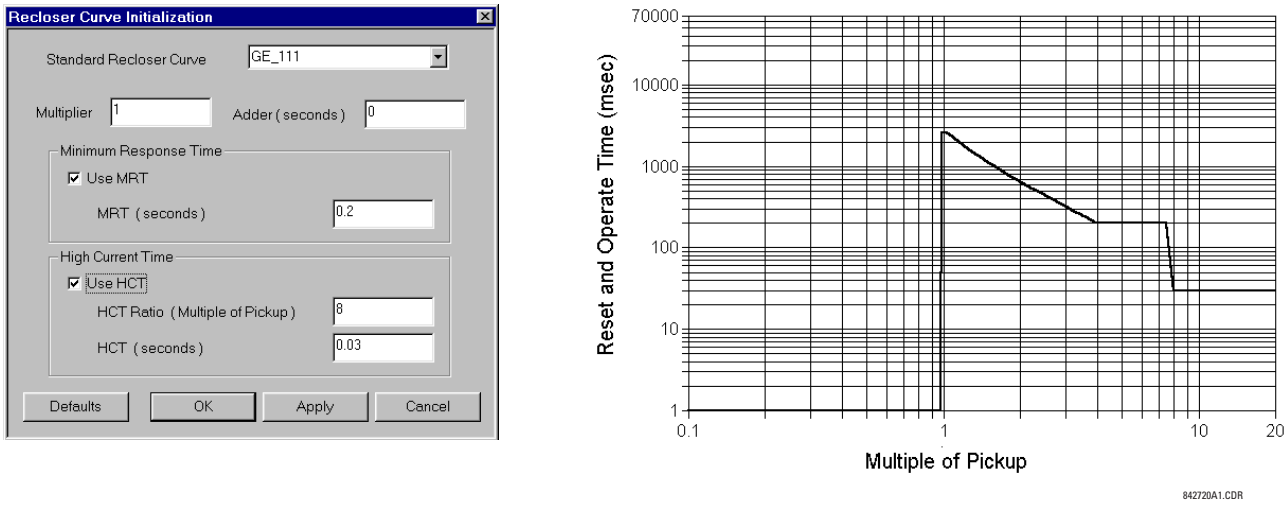

Figure 5–31: COMPOSITE RECLOSER CURVE WITH HCT ENABLED

NOTE

Configuring a composite curve with an increase in operating time at increased pickup multiples is not allowed. If this is attempted, the EnerVista UR Setup software generates an error message and discards the proposed changes.

e) STANDARD RECLOSER CURVES

The standard recloser curves available for the G60 are displayed in the following graphs.

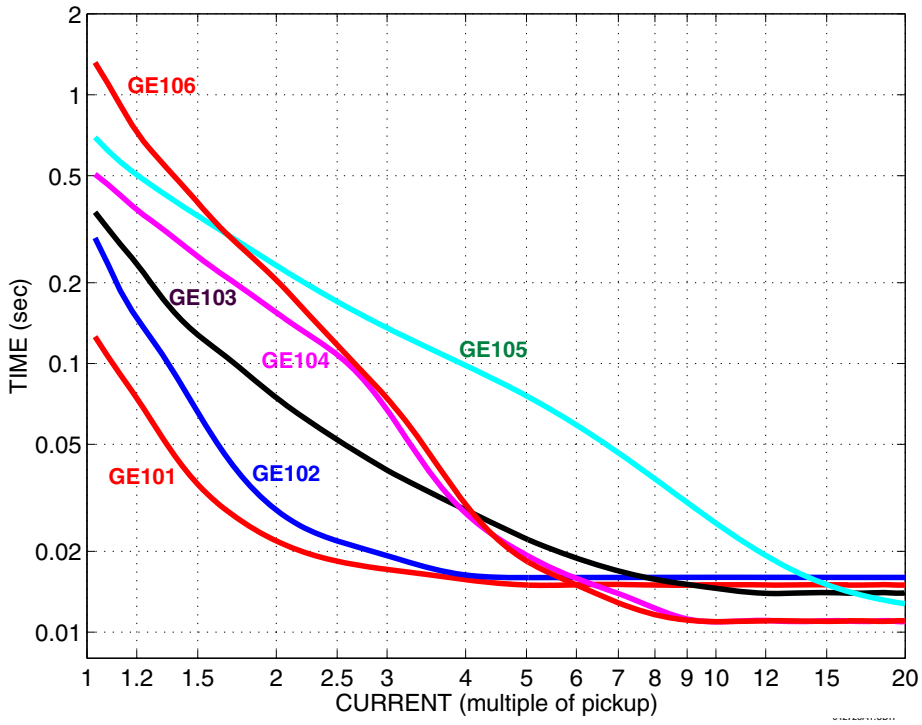

Figure 5–32: RECLOSER CURVES GE101 TO GE106

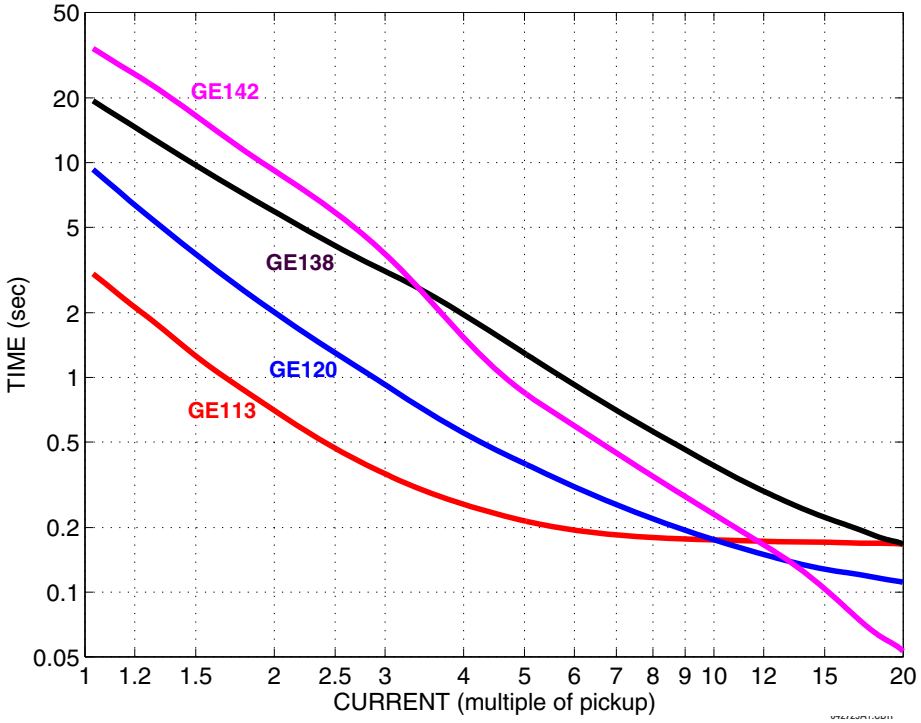

Figure 5–33: RECLOSER CURVES GE113, GE120, GE138 AND GE142

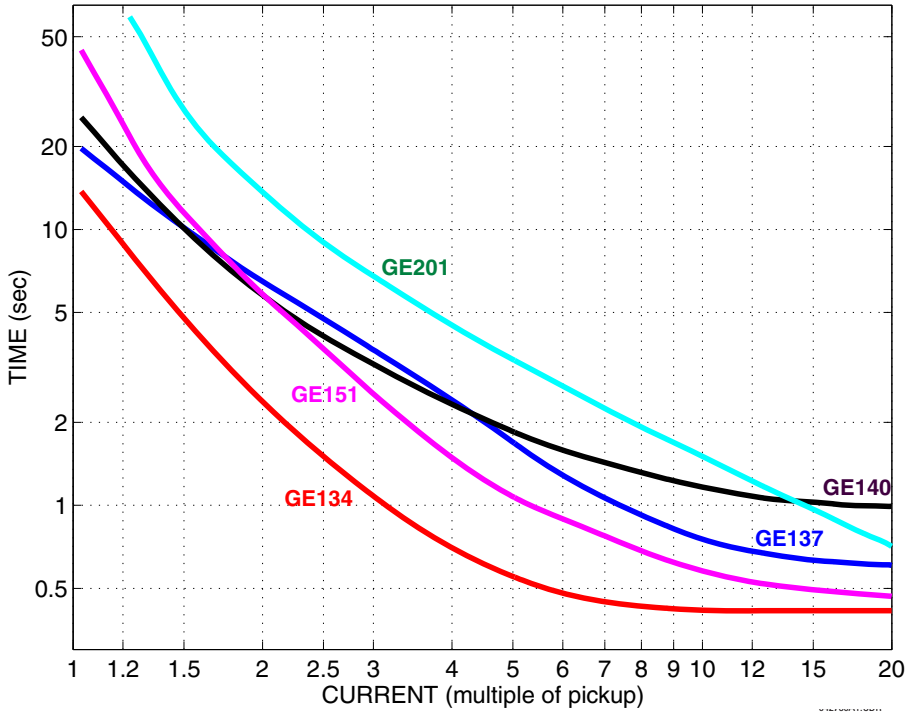

Figure 5–34: RECLOSER CURVES GE134, GE137, GE140, GE151 AND GE201

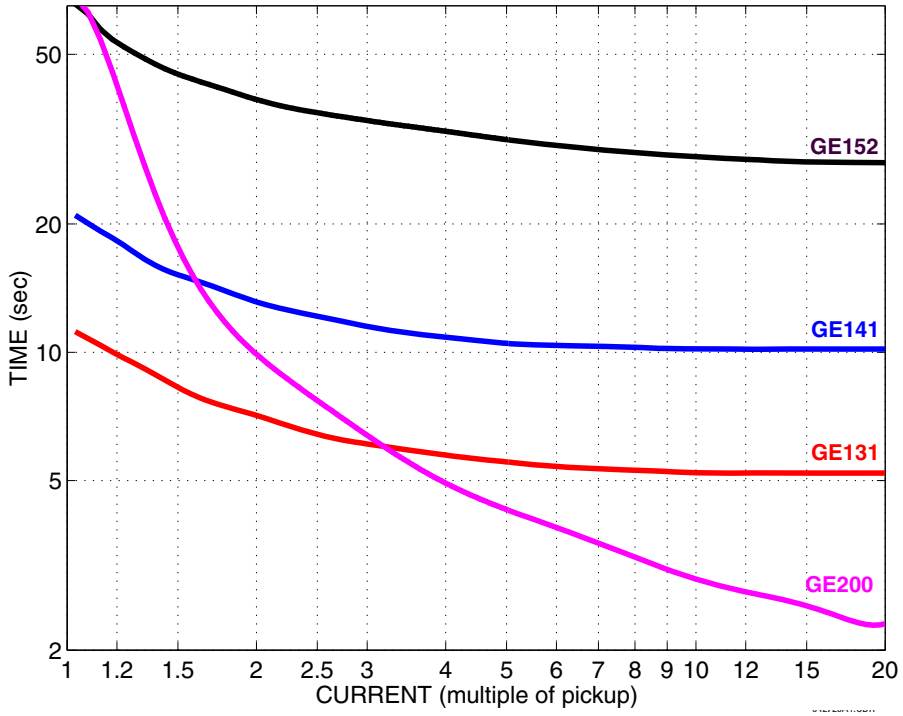

Figure 5–35: RECLOSER CURVES GE131, GE141, GE152, AND GE200

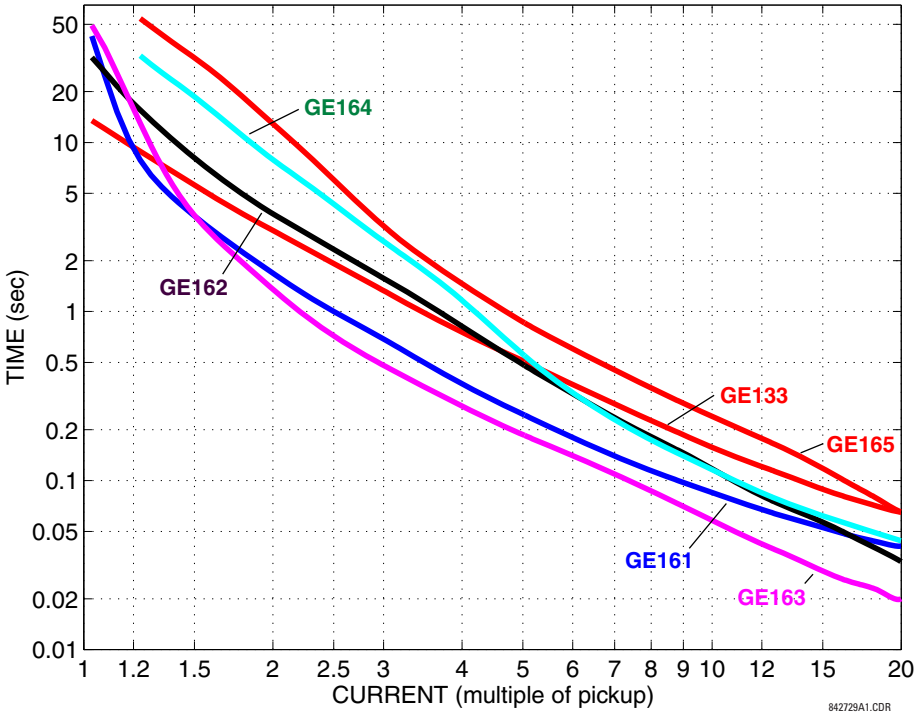

Figure 5–36: RECLOSER CURVES GE133, GE161, GE162, GE163, GE164 AND GE165

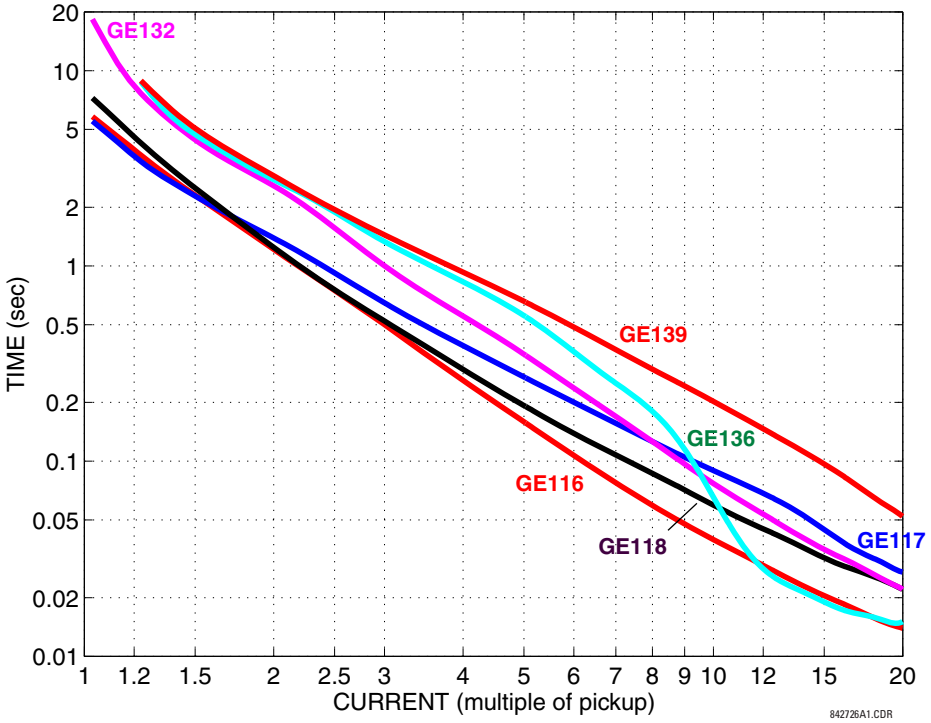

Figure 5–37: RECLOSER CURVES GE116, GE117, GE118, GE132, GE136, AND GE139

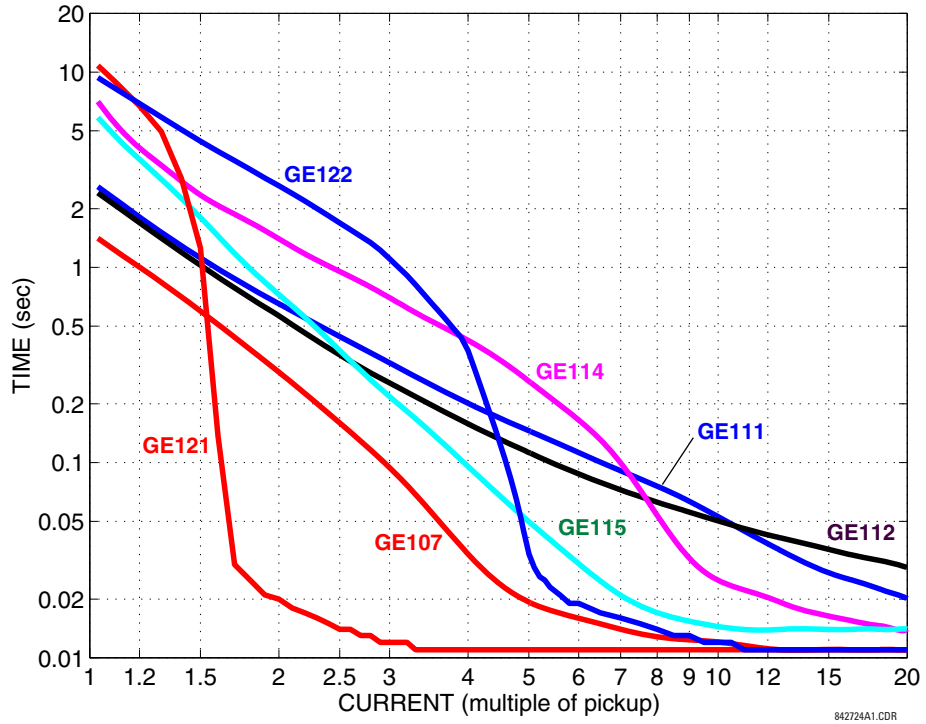

Figure 5–38: RECLOSER CURVES GE107, GE111, GE112, GE114, GE115, GE121, AND GE122

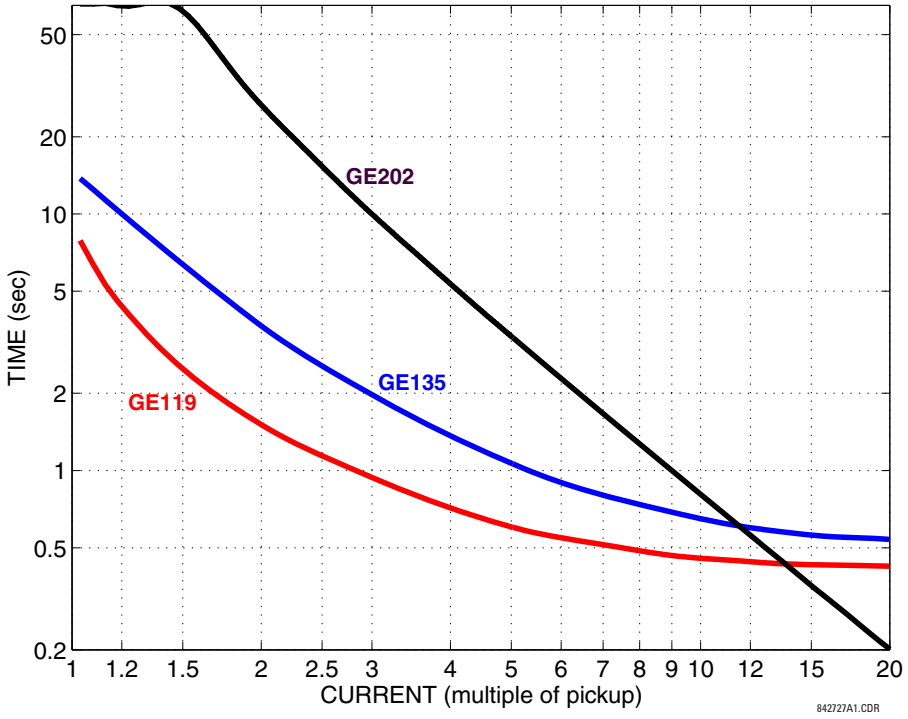

Figure 5–39: RECLOSER CURVES GE119, GE135, AND GE202

5.4.7 PHASOR MEASUREMENT UNIT

a) MAIN MENU

PATH: SETTINGS ⇨⇩ SYSTEM SETUP ⇨⇩ PHASOR MEASUREMENT UNIT

■ PHASOR MEASUREMENT ■ UNIT	◀▶	■ PHASOR MEASUREMENT ■ UNIT 1	See below.
MESSAGE	▲▼	■ PMU AGGREGATOR 1 ■	See page 5–138.
MESSAGE	▲	■ IEC 90-5 MSVCB 1 ■ CONFIGURATION	See page 5–140.

The G60 is provided with an optional phasor measurement unit feature. This feature is specified as a software option at the time of ordering. The number of phasor measurement units available can also depend on this option. Using the order code for your device, see the order codes in chapter 2 for details.

UR Synchrophasor Implementation

PHASORS are used within protection relays. If these phasors are referenced to a common time base they are referred to as a **SYNCHROPHASOR**. A vastly improved method for tracking power system dynamic phenomena for improved power system monitoring, protection, operation, and control can be realized if Synchrophasors from different locations within the power system are networked to a central location.

The G60 offers PMU features over two communication standards, IEC 61850-9-5 and IEEE C37.118. The figure shows complete Synchrophasor implementation.

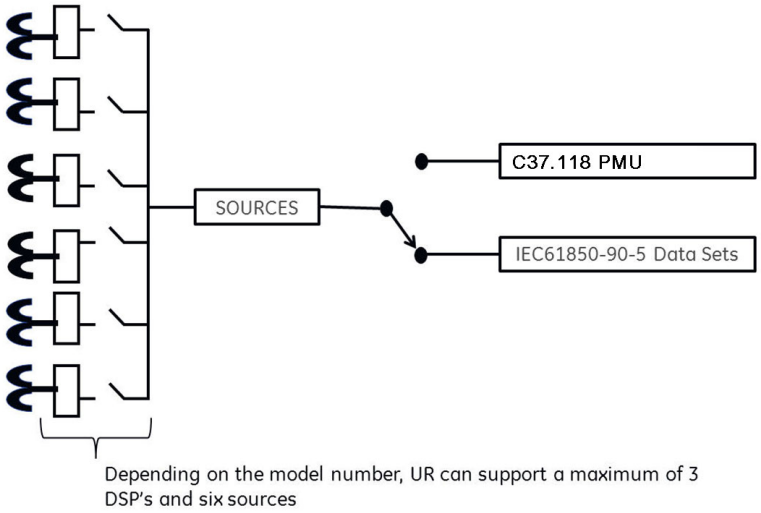

Figure 5–40: COMPLETE SYNCHROPHASOR IMPLEMENTATION

UR Implementation of IEC 61850-90-5

Synchrophasor data as measured and calculated by phasor measurement units (PMUs) is used to assess the condition of the electrical power network. The IEEE C37.118 standards define synchrophasors and related message formats to transmit synchrophasor data. Synchrophasor streaming via IEEE C37.118 has proven to work but the desire to have a communication mechanism that is compliant with the concept of IEC 61850 has led to the development of IEC 61850-90-5. The IEC 61850-90-5 standard defines the packet structure for multicast routing of streamed Sampled Value (SV) known as R-SV.

Firmware versions 7.0 and above have a 90-5 based R-SV implementation equivalent in structure and configuration to that of the existing IEEE C37.118 implementation of firmware version 6.0, that is, synchrophasor data at rates up to 60 Hz for metering and 120 Hz for protection class synchrophasors. The following two figures depict the general data flow for the generation of synchrophasor data for IEC 61850-90-5. In the first figure, when IEC 61850-90-5 is selected all real and virtual sources are available for the IEC 61850-90-5 PMUs.

The number of PMUs and aggregators vary by product, as outlined in the table.

Table 5–14: IMPLEMENTATION BY MODEL NUMBER

MODEL	NUMBER OF PMUS	NUMBER OF AGGREGATORS	COMMENT
N60	1, 2, 4, or 6	1 with 1 PMU 2 with 2 or 4 PMUs 4 with 6 PMUs	Number of PMUs is ordered using software options
C60	2	2	
D60, F60, G60, L30, L90, T60	1	1	

The figure shows an example of an N60 using four Logical Device PMUs (Logical Device 2 through 5) and four aggregators. The control blocks for the aggregators are located in LD1. A 64 char LDName setting is provided.

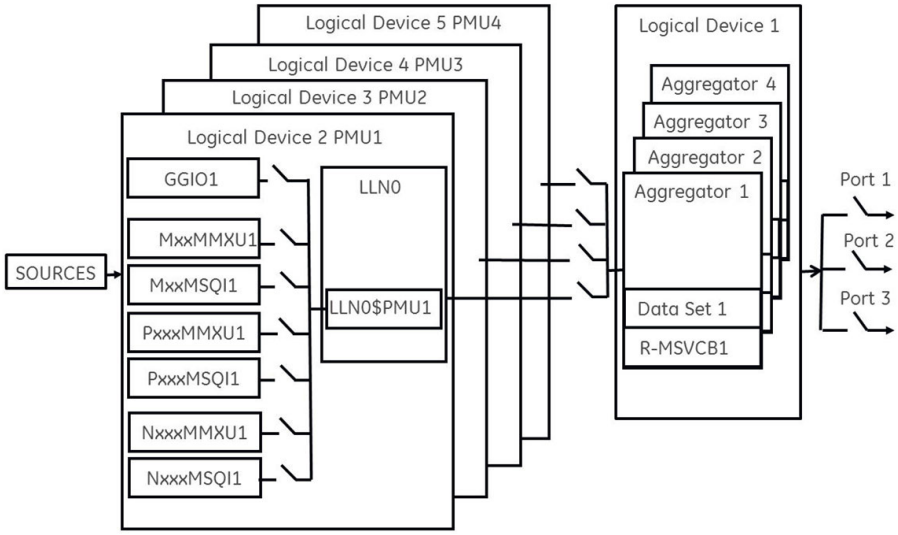

Figure 5–41: N60 EXAMPLE FOR FOUR LOGICAL DEVICE PMUS

NOTE

Precise time input to the relay from the international time standard, via either IRIG-B or PTP, is vital for correct synchrophasor measurement and reporting. For IRIG-B, a DC level shift IRIG-B receiver must be used for the phasor measurement unit to output proper synchrophasor values.

Depending on the applied filter, the Synchrophasors that are produced by PMUs are classified as either P (protection) or M (Measurement) class Synchrophasors. Synchrophasors available within the UR that have no filtering applied are classified as NONE, which within the standard is classified as PRES OR UNKNOWN under the Calculation Method - ClcMth. Each Logical Device PMU supports one MxxMMXU, MxxMSQI, PxxxMMXU , PxxxMSQI, NxxMMXU, and one NxxMSQI logical node.

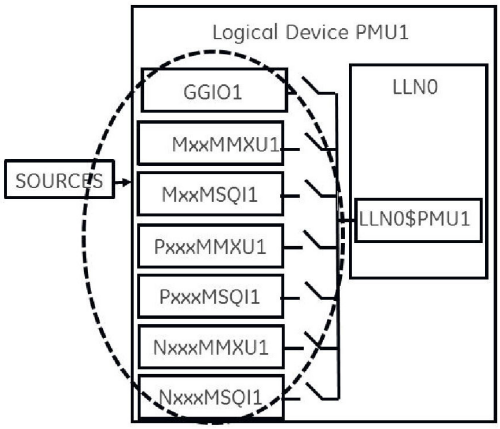

Figure 5–42: LOGICAL NODES SUPPORTED IN EACH LOGICAL DEVICE

The following is a summary of LNs that are in each Logical Device (LD2 through LD7):

- PxxxMMXU1 ClcMth = P-Class (Note Vaux is mapped to Vneut of MMXU)
- PxxxMSQI1 ClcMth = P-CLASS
- MxxMMXU1 ClcMth = M-Class (Note Vaux is mapped to Vneut of MMXU)
- MxxMSQI1 ClcMth = M-CLASS
- NxxMMXU1 ClcMth = M-Class (Note Vaux is mapped to Vneut of MMXU)

- NxxMSQI1 ClcMth = M-CLASS

- GGIO1 which contains 16 digital status indication points and 16 analog points. The Analog GGIO values are selectable from any FlexAnalog value in the UR.

NOTE

The Synchro Logical Nodes in an LD report at the same rate as set in the PMUn Basic Configuration setting. This is reflected in the instantiation of the Data Object – SmpRate in the msvcb## of LLN0 in the LD1. SmpRate is a Read Only Integer Status (INS).

When the first PMU from any LD is mapped into an aggregator, the aggregator inherits the Sample Rate (SmpRate) and IEEE C37.118 Class (P or M) of that PMU. The value of the SmpRate DO in the Report Control Block is set based on the value of the Sample Rate in the PMU. The Class of the Dataset are mapped into the MSVID of the Dataset (see text below for the overall name of the MSVID). If other PMUs are mapped into the same aggregator with different Sample Rates or from different classes, then a Self-Test error (DatSetErr) is set and dataset transmission is blocked.

A setting value – MSVID – is created with a maximum input range of 56 characters (=64 less 6 for the IDCode less 2 for the Class).

The value of MSVID in the dataset is a concatenation of the aggregator IDCode and the MSVID setting value in the format: MSVID-AggregatorIDCode-CLASS where CLASS is P, M, or N (for None) – depending on the Class of the first PMU included in the Aggregator.

NOTE

Synchrophasor Rectangular Format and Integer data types are NOT supported in IEC 61850-90-5 (only supported with IEEE C37.118) and not to set — GGIO1 which contains 16 digital status indication points — aggregated as a 16 bit bitstring and 16 analog points. The Analog GGIO values are selectable from any FlexAnalog value in the UR. For version 7.0 and later the description fields for the phasors, analog and digital channels are populated with the 16 character name field provided within the Basic Configuration menu. Additionally, the names of the 16 binary points are implemented as numbered descriptions — d1, d2, d3, and so on. The number of descriptions are equal to the number of bits configured in the 16 bit digital status word.

NOTE

All bitstrings less than or equal to 32 bits in length map into a 32 bit bitstring in an IEC 61850-90-5 dataset.

The Value of the Nominal Frequency of the chassis is instantiated as a DO in LPHD of LD1. The value is named HzNom and is an Integer Status (INS).

The UR also supports the option to apply no filtering to the synchrophasors. If no filtering is applied (PMU Class = None), according to the standard, the ClcMth attribute is PRES. The semantic of the ClcMth used is not carried in the individual DO and so it is recommended that one of letters of the prefix on the instantiated LNs be set to “P” or “M” accordingly in order to differentiate. For version 7.0 and later, only FCDA data is supported. The *Implementation by Model Number* table earlier describes the maximum size of each PMU data set for version 7.2 and later using FCDA data (non-structured data).

EXAMPLE: PROTECTION SYNCHROPHASORS DATA SET WITH REPORTING RATE 60 FRAMES/SECOND

This example gives the protection synchrophasors data set with a reporting rate of 60 frames per second (P60MMXU1). See the figure earlier, Logical Nodes Supported in Each Logical Device. This data or list of items, as shown in the following figure, is not available to the UR setup program but is available to be mapped by the user into a selected aggregator or aggregators dataset. The logical device name (LDName) of each PMU LD is a 64 character user setting. The IEEE C37.118 STN and IDCode is to be mapped as a concatenated value in the (d)escription field of LPL CDC of the NamPlt DO in LLN0. The mapping is implemented as STN-IDCode (text string).

From each PMU, the user selects the phasor information of interest that is mapped into the selected aggregator datset(s). For version 7.0 and later only FCDA data is supported.

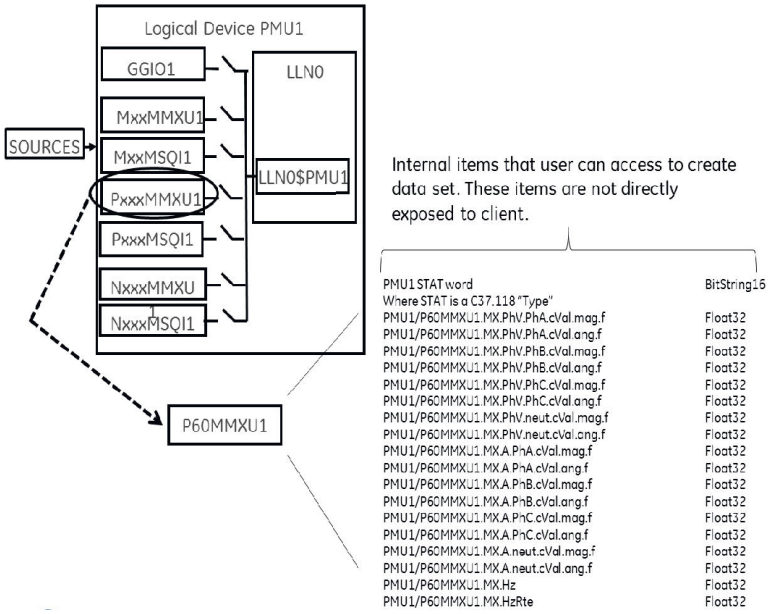

Figure 5–43: DATA SET CREATED FROM USER SELECTED INTERNAL ITEMS

EXAMPLE: THE CREATION OF DIFFERENT DATA SETS

The aggregators allow the aggregation of phasors from multiple PMUs (with the same reporting rate) into a single custom data set to optimize bandwidth when streaming.

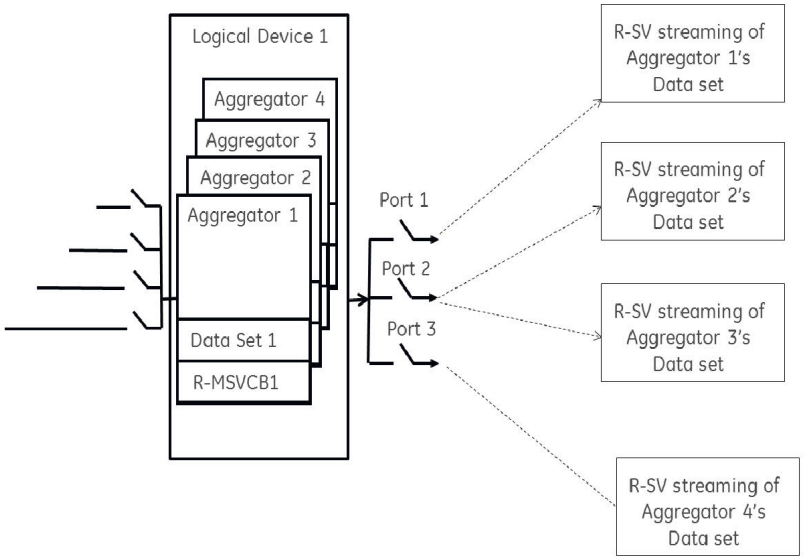

Figure 5–44: EXAMPLE OF AGGREGATOR DATA SETS

CONFIGURATION EXAMPLE: CFG-2 BASED CONFIGURATION (USING IEC 61850-90-5)

The G60 is expected to send the CFG-2 file (IEEE C37.118 config. file) upon request from the upstream synchrophasor devices (for example, P30) without stopping R-SV multicasting, as shown in the figure below. The primary domain controller (PDC) does not need to use a stop/start data stream command if the UR protocol is set to IEC 61850-90-5 prior to requesting the configuration via CFG-2 (IEEE C37.118 config. file). The CFG-2 request from the P30 can be on TCP/IP or UDP/IP, however, R-SV data streaming is only UDP multicasts (not TCP).

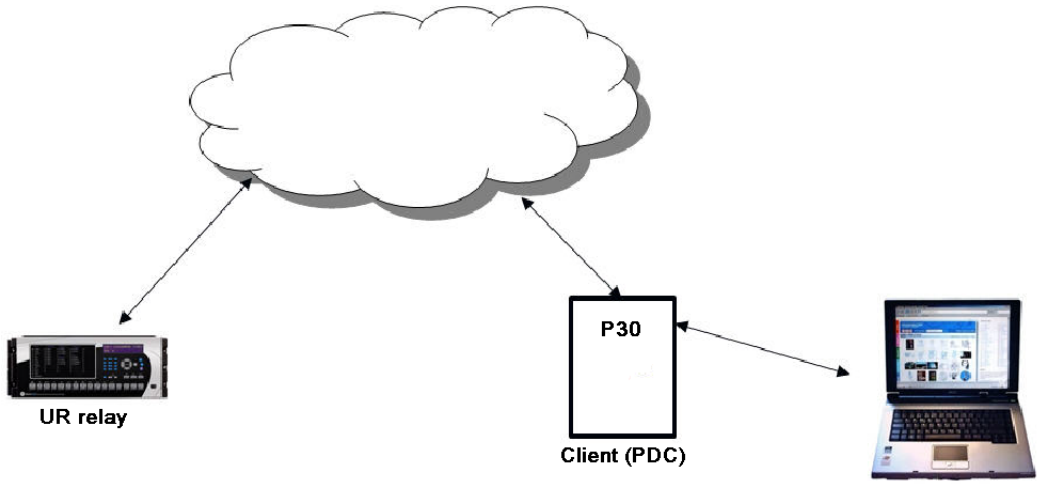

Figure 5–45: CFG-2 BASED CONFIGURATION SOLUTION

MODIFICATION OF SYNC WORD IN CFG-2 FOR TR 90-5 DATA SETS

In the CFG-2 file, all relevant information about the data being streamed is included. However, this file does not include the fact that it describes a 90-5 dataset or the number of Application Service Data Units (datasets). In order to communicate this information via the CFG-2 file for a given aggregator, when the aggregator is set to 90-5, the version number of the CFG-2 file (found in bits 0-3 of the frame SYNC word, which should presently be set to 2) is set as follows:

VALUE (DECIMAL)	# OF ASDUS
11	1
12	2
13	3
14	4

The PMU settings are organized in logical groups as follows. For correct PMU operation, upgrade the firmware to the latest v7.2x release; consult the v7.2x Release Notes for information.

PATH: SETTINGS ⇨⇩ SYSTEM SETUP ⇨⇩ PHASOR MEASUREMENT UNIT ⇨⇩ PHASOR MEASUREMENT UNIT 1

■ PHASOR MEASUREMENT ■ UNIT 1	◀▶	■ PMU 1 BASIC ■ CONFIGURATION	See page 5-125.
MESSAGE	▲▼	■ PMU 1 ■ CALIBRATION	See page 5-129.
MESSAGE	▲▼	■ PMU 1 ■ TRIGGERING	See page 5-130.
MESSAGE	▲	■ PMU 1 ■ RECORDING	See page 5-138.

b) BASIC CONFIGURATION

PATH: SETTINGS ⇨⇩ SYSTEM SETUP ⇨⇩ PHASOR MEASUREMENT UNIT ⇨ PHASOR MEASUREMENT UNIT1 ⇨ PMU 1 BASIC CONFIGURATION

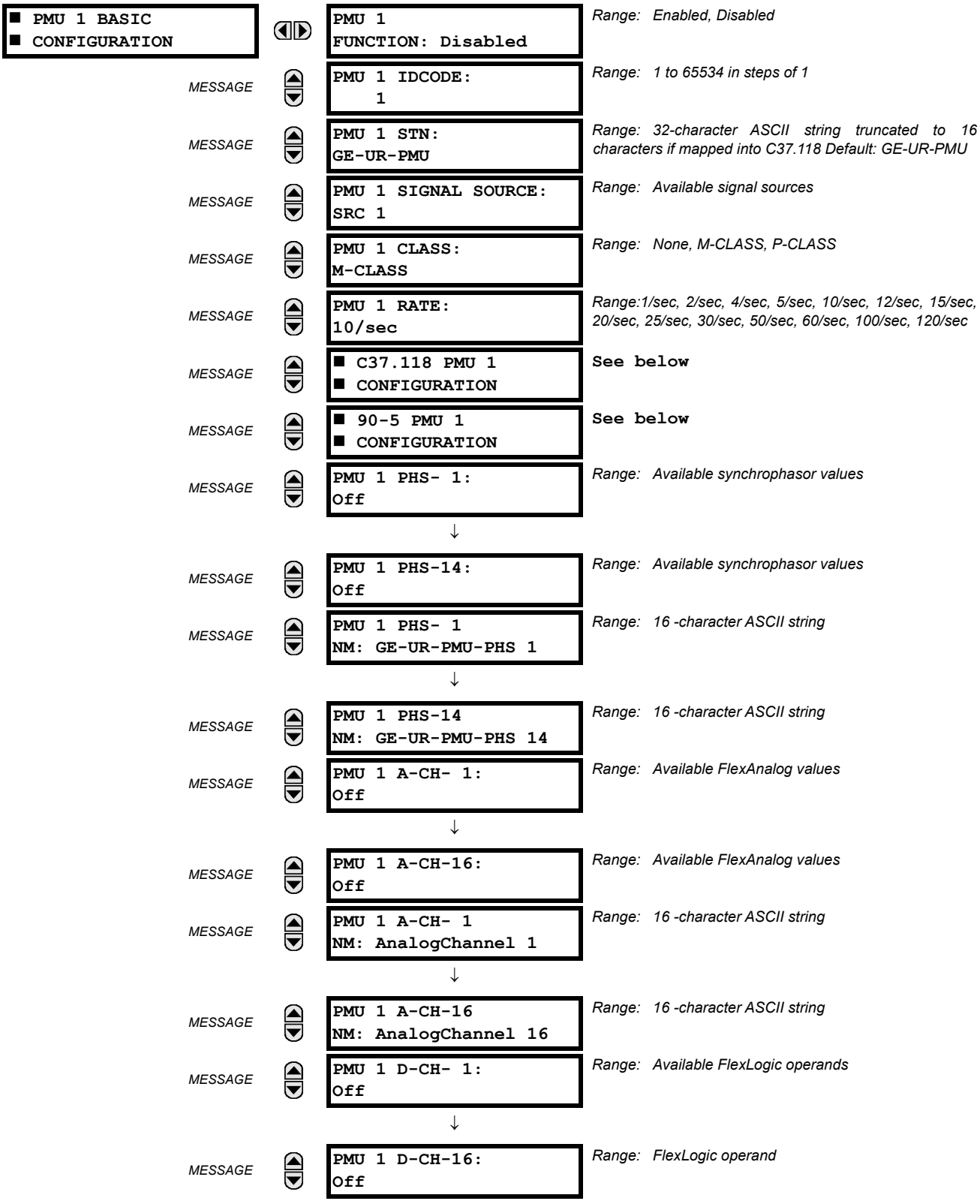

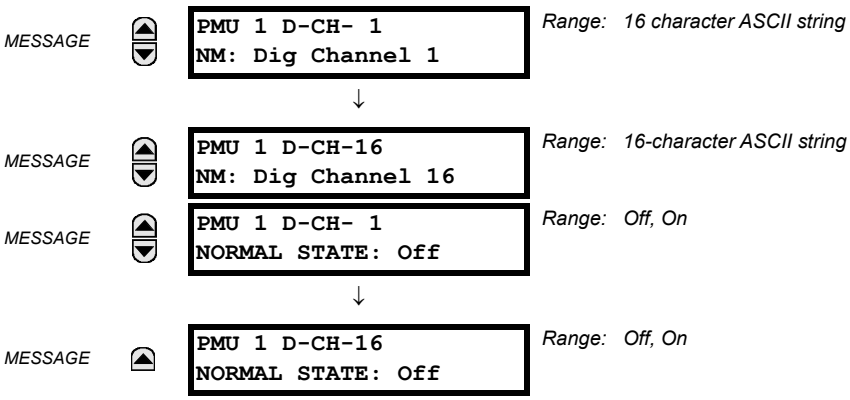

This section contains basic phasor measurement unit (PMU) data, such as functions, source settings, and names.

- **PMU 1 FUNCTION**: This setting enables the LOGICAL Device PMU 1 functionality. Use this setting to permanently enable or disable the feature.
- **PMU 1 IDCODE**: This setting assigns a numerical ID to the PMU. It corresponds to the IDCODE field of the data, configuration, header, and command frames of the IEEE C37.118 protocol. The PMU uses this value when sending data, configuration, and header frames; and it responds to this value when receiving the command frame. This is used when only data from one PMU is present.
- **PMU 1 STN**: This setting assigns an alphanumeric ID to the PMU station. It corresponds to the STN field of the configuration frame of the IEEE C37.118 protocol. This value is a 16-character ASCII string as per the IEEE C37.118 standard.
- **PMU 1 SIGNAL SOURCE**: This setting specifies one of the available G60 signal sources for processing in the PMU. Note that any combination of voltages and currents can be configured as a source. The current channels can be configured as sums of physically connected currents. This facilitates PMU applications in breaker-and-a-half, ring-bus, and similar arrangements. The PMU feature calculates voltage phasors for actual voltage (A, B, C, and auxiliary) and current (A, B, C, and ground) channels of the source, as well as symmetrical components (0, 1, and 2) of both voltages and currents. When configuring communication and recording features of the PMU, the user can select, from the above superset, the content to be sent out or recorded. When one source is selected by one PMU, it cannot be selected by another PMU.
- **PMU 1 CLASS**: This setting selects the synchrophasor class. Note that a reporting rate of 100 or 120 can only be selected for class P synchrophasors and if the system frequency is 50 or 60 Hz, respectively.
- **PMU 1 RATE**: This setting specifies the reporting rate for the network (Ethernet) port. This value applies to all PMU streams of the device that are assigned to transmit over this aggregator. For a system frequency of 60 Hz (50 Hz), the G60 generates a reporting mismatch message if the selected rate is not set as 10 Hz, 12 Hz, 15 Hz, 20 Hz, 30 Hz, 60 Hz, or 120 Hz (or 10 Hz, 25 Hz, 50 Hz or 100 Hz when the system frequency is 50 Hz) when entered via the keypad or software; and the G60 stops the transmission of reports. Note that 4 Hz is not allowed for an M-class 50 Hz system.

- **PMU 1 PHS-1** to **PMU 1 PHS-14**: These settings specify synchrophasors to be transmitted from the superset of all synchronized measurements. The table outlines available synchrophasor values.

SELECTION	MEANING
Va	First voltage channel, either Va or Vab
Vb	Second voltage channel, either Vb or Vbc
Vc	Third voltage channel, either Vc or Vca
Vx	Fourth voltage channel
Ia	Phase A current, physical channel or summation as per the source settings
Ib	Phase B current, physical channel or summation as per the source settings
Ic	Phase C current, physical channel or summation as per the source settings
Ig	Fourth current channel, physical or summation as per the source settings
V1	Positive-sequence voltage, referenced to Va
V2	Negative-sequence voltage, referenced to Va
V0	Zero-sequence voltage
I1	Positive-sequence current, referenced to Ia
I2	Negative-sequence current, referenced to Ia
I0	Zero-sequence current

These settings allow for optimizing the frame size and maximizing transmission channel usage, depending on a given application. Select "Off" to suppress transmission of a given value.

- **PMU 1 PHS-1 NM** to **PMU 1 PHS-14 NM**: These settings allow for custom naming of the synchrophasor channels. Sixteen-character ASCII strings are allowed as in the CHNAM field of the configuration frame. These names are typically based on station, bus, or breaker names.
- **PMU 1 A-CH-1** to **PMU 1 A-CH-16**: These settings specify any analog data measured by the relay to be included as a user-selectable analog channel of the data frame. Up to 16 analog channels can be configured to send any FlexAnalog value from the relay. Examples include frequency, rate of frequency change, active and reactive power, per phase or three-phase power, power factor, temperature via RTD inputs, and THD. The configured analog values are sampled concurrently with the synchrophasor instant and sent as 32-bit floating-point values scaled to Engineering units.
- **PMU 1 A-CH-1 NM** to **PMU 1 A-CH-16 NM**: These settings allow for custom naming of the analog channels. Sixteen-character ASCII strings are allowed as in the CHNAM field of the configuration frame.
- **PMU 1 D-CH-1** to **PMU 1 D-CH-16**: These settings specify any digital flag measured by the relay to be included as a user-selectable digital channel of the data frame. Up to 16 digital channels can be configured to send any FlexLogic operand from the relay. The configured digital flags are sampled concurrently with the synchrophasor instant. These values are mapped into a two-byte integer number, with byte 1 LSB corresponding to the digital channel 1 and byte 2 MSB corresponding to digital channel 16.
- **PMU 1 D-CH-1 NM** to **PMU 1 D-CH-16 NM**: These settings allow for custom naming of the digital channels. Sixteen-character ASCII strings are allowed as in the CHNAM field of the configuration frame.
- **PMU 1 D-CH-1 NORMAL STATE** to **PMU 1 D-CH-16 NORMAL STATE**: These settings allow for specifying a *normal state* for each digital channel. These states are transmitted in configuration frames to the data concentrator.

C37.118 PMU 1 CONFIGURATION

PATH: SETTINGS ⇨⇩ SYSTEM SETUP ⇨⇩ PHASOR MEASUREMENT UNIT ⇨ PHASOR MEASUREMENT UNIT1 ⇨ PMU 1 BASIC CONFIGURATION ⇨ C37.118 PMU 1 CONFIGURATION

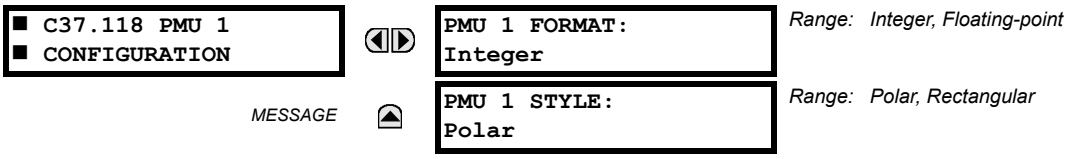

PMU 1 FORMAT: This setting selects whether synchrophasors are reported as 16-bit integers or 32-bit IEEE floating point numbers. This setting complies with bit-1 of the FORMAT field of the IEEE C37.118 configuration frame. This setting applies to synchrophasors only; the user-selectable FlexAnalog channels are always transmitted as 16-bit integer values.

PMU 1 STYLE: This setting selects whether synchrophasors are reported in rectangular (real and imaginary) coordinates or in polar (magnitude and angle) coordinates. This setting complies with bit-0 of the FORMAT field of the IEEE C37.118 configuration frame.

NOTE With 90-5 PMU, the FORMAT and STYLE are Floating-point and Polar respectively, as specified in the IEC 61850 standard.

IEC 61850–90–5 PMU 1 CONFIGURATION

PATH: SETTINGS ⇨⇩ SSYSTEM SETUP ⇨⇩ PHASOR MEASUREMENT UNIT ⇨ PHASOR MEASUREMENT UNIT1 ⇨ PMU 1 BASIC CONFIGURATION ⇨ 90 – 5 PMU 1 CONFIGURATION

```
■ 90-5 PMU 1
■ CONFIGURATION
```

⇦⇨

```
PMU 1 LDINST:
PMU1
```

Range: 64 char ASCII text

PMU1 LDINST: A user-defined visible string (maximum 64 char ASCII test) to assign Logical Device (LD) Inst for a PMU LD.

NOTE As per IEC 61850-6 standard specification, the PMU LD Name is the concatenated combination (to total 64 characters) of IED Name (specified in IEC 61850 Server Settings) appended with PMU X LDINST string.

c) PMU CALIBRATION

PATH: SETTINGS ⇨⇩ SYSTEM SETUP ⇨⇩ PHASOR MEASUREMENT UNIT ⇨⇩ PHASOR MEASUREMENT UNIT 1 ⇨⇩ PMU 1 CALIBRATION

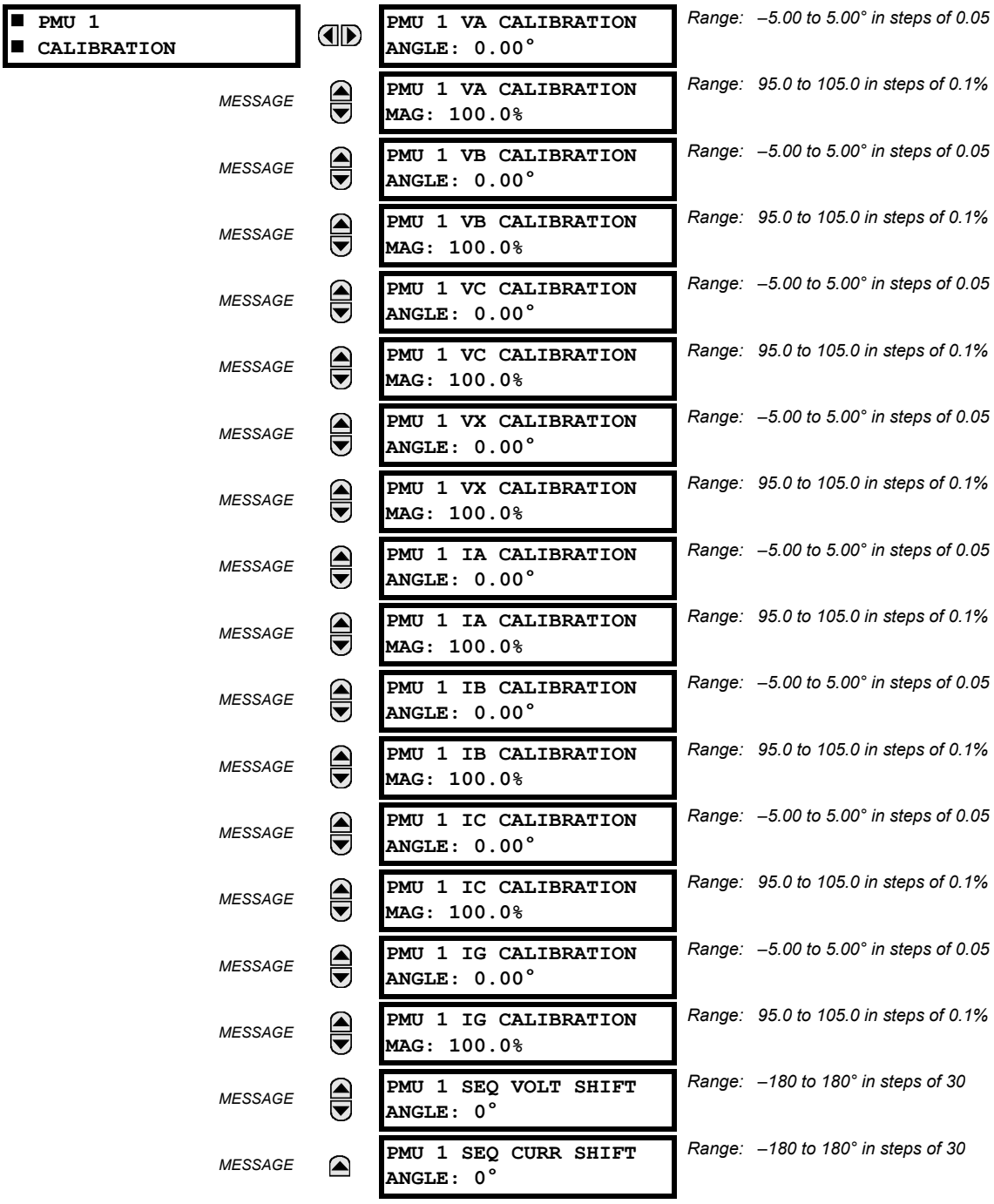

This menu contains user angle and magnitude calibration data for the phasor measurement unit (PMU). This data is combined with the factory adjustments to shift the phasors for better accuracy.

- **PMU 1 VA... IG CALIBRATION ANGLE**: These settings recognize applications with protection class voltage and current sources, and allow the user to calibrate each channel (four voltages and four currents) individually to offset errors introduced by VTs, CTs, and cabling. The setting values are effectively added to the measured angles. Therefore, enter a positive correction of the secondary signal lags the true signal; and negative value if the secondary signal leads the true signal.

- **PMU 1 VA... IG CALIBRATION MAGNITUDE**: These settings recognize applications with protection class voltage and current sources, and allow the user to calibrate each channel (four voltages and four currents) individually to offset errors introduced by VTs, CTs. The setting values are effectively a multiplier of the measured magnitudes. Therefore, enter a multiplier greater than 100% of the secondary signal increases the true signal; and a multiplier less than 100% value of the secondary signal reduces the true signal.
- **PMU 1 SEQ VOLT SHIFT ANGLE**: This setting allows correcting positive- and negative-sequence voltages for vector groups of power transformers located between the PMU voltage point, and the reference node. This angle is effectively added to the positive-sequence voltage angle, and subtracted from the negative-sequence voltage angle. Note that:
  1. When this setting is not "0°", the phase and sequence voltages do not agree. Unlike sequence voltages, the phase voltages cannot be corrected in a general case, and therefore are reported as measured.
  2. When receiving synchrophasor data at multiple locations, with possibly different reference nodes, it can be more beneficial to allow the central locations to perform the compensation of sequence voltages.
  3. This setting applies to PMU data only. The G60 calculates symmetrical voltages independently for protection and control purposes without applying this correction.
  4. When connected to line-to-line voltages, the PMU calculates symmetrical voltages with the reference to the AG voltage, and not to the physically connected AB voltage (see the Metering Conventions section in Chapter 6).
- **PMU 1 SEQ CURR SHIFT ANGLE**: This setting allows correcting positive and negative-sequence currents for vector groups of power transformers located between the PMU current point and the reference node. The setting has the same meaning for currents as the **PMU 1 SEQ VOLT SHIFT ANGLE** setting has for voltages. Normally, the two correcting angles are set identically, except rare applications when the voltage and current measuring points are located at different windings of a power transformer.

d) PMU TRIGGERING OVERVIEW

PATH: SETTINGS ⇨⇩ SYSTEM SETUP ⇨⇩ PHASOR... ⇨⇩ PHASOR MEASUREMENT UNIT 1 ⇨⇩ PMU 1 TRIGGERING

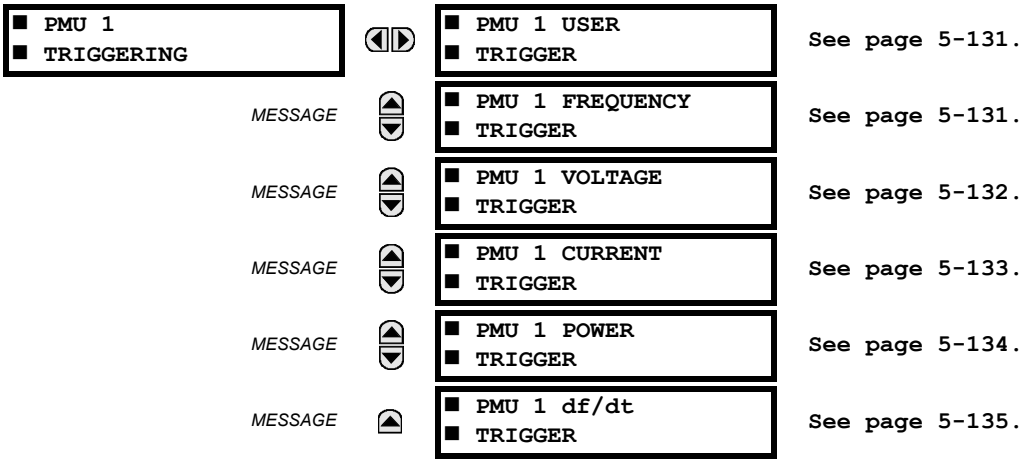

Each logical phasor measurement unit (PMU) contains five triggering mechanisms to facilitate triggering of the associated PMU recorder, or cross-triggering of other PMUs of the system. They are:

- Overfrequency and underfrequency
- Overvoltage and undervoltage
- Overcurrent
- Overpower
- High rate of change of frequency

The pre-configured triggers can be augmented with a user-specified condition built freely using programmable logic of the relay. The entire triggering logic is refreshed once every two power system cycles.

All five triggering functions and the user-definable condition are consolidated (ORed) and connected to the PMU recorder. Each trigger can be programmed to log its operation into the event recorder, and to signal its operation via targets. The five triggers drive the STAT bits of the data frame to inform the destination of the synchrophasor data regarding the cause of trigger. The following convention is adopted to drive bits 11, 3, 2, 1, and 0 of the STAT word.

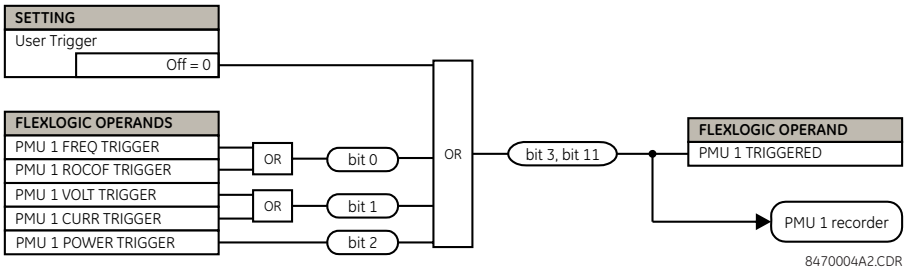

Figure 5–46: STAT BITS LOGIC

The trigger reset (drop-off) timer is available for all five triggering functions (FREQ, ROCOF, VOLT, CURR, POWER) in individual trigger settings under the TRIGGER DPO TIME setting. This asserts individual trigger operand and overall PMU x TRIGGERED operand with stat bits 3 and 11 for a fixed interval defined by this setting. If it is required that PMU x TRIGGERED operand with stat bits 3 and 11 stay longer than the individual reset timer, then use the PMU x USER TRIGGER setting assigned with appropriate elements and FlexLogic. In short, in case of USER TRIGGER, the drop-off time needs to be implemented using FlexLogic.

e) USER TRIGGERING

PATH: SETTINGS ⇨⇩ SYSTEM SETUP ⇨⇩ PHASOR MEASUREMENT... ⇨⇩ PMU 1 TRIGGERING ⇨⇩ PMU 1 USER TRIGGER

■ PMU 1 USER ■ TRIGGER	◀▶	PMU 1 USER TRIGGER: Off	*Range: FlexLogic operands*

The user trigger allows customized triggering logic to be constructed from FlexLogic. The entire triggering logic is refreshed once every two power system cycles.

f) FREQUENCY TRIGGERING

PATH: SETTINGS ⇨⇩ SYSTEM SETUP ⇨⇩ PHASOR MEASUREMENT... ⇨⇩ PMU 1 TRIGGERING ⇨⇩ PMU 1 FREQUENCY TRIGGER

■ PMU 1 FREQUENCY ■ TRIGGER	◀▶	PMU 1 FREQ TRIGGER FUNCTION: Disabled	*Range: Enabled, Disabled*
	MESSAGE ▲▼	PMU 1 FREQ TRIGGER LOW-FREQ: 49.00 Hz	*Range: 20.00 to 70.00 Hz in steps of 0.01*
	MESSAGE ▲▼	PMU 1 FREQ TRIGGER HIGH-FREQ: 61.00 Hz	*Range: 20.00 to 70.00 Hz in steps of 0.01*
	MESSAGE ▲▼	PMU 1 FREQ TRIGGER PKP TIME: 0.10 s	*Range: 0.00 to 600.00 s in steps of 0.01*
	MESSAGE ▲▼	PMU 1 FREQ TRIGGER DPO TIME: 1.00 s	*Range: 0.00 to 600.00 s in steps of 0.01*
	MESSAGE ▲▼	PMU 1 FREQ TRIG BLK: Off	*Range: FlexLogic operand*
	MESSAGE ▲▼	PMU 1 FREQ TRIGGER TARGET: Self-reset	*Range: Self-reset, Latched, Disabled*
	MESSAGE ▲	PMU 1 FREQ TRIGGER EVENTS: Disabled	*Range: Enabled, Disabled*

The trigger responds to the frequency signal of the phasor measurement unit (PMU) source. The frequency is calculated from among phase voltages, auxiliary voltage, phase currents and ground current, in this hierarchy, depending on the source configuration as per G60 standards. This element requires that the frequency be above the minimum measurable value. If the frequency is below this value, such as when the circuit is de-energized, the trigger drops out.

- **PMU 1 FREQ TRIGGER LOW-FREQ**: This setting specifies the low threshold for the abnormal frequency trigger. The comparator applies a 0.02 Hz hysteresis.
- **PMU 1 FREQ TRIGGER HIGH-FREQ**: This setting specifies the high threshold for the abnormal frequency trigger. The comparator applies a 0.02 Hz hysteresis.
- **PMU 1 FREQ TRIGGER PKP TIME**: This setting can be used to filter out spurious conditions and avoid unnecessary triggering of the recorder.
- **PMU 1 FREQ TRIGGER DPO TIME**: This setting can be used to extend the trigger after the situation returned to normal. This setting is of particular importance when using the recorder in the forced mode (recording as long as the triggering condition is asserted).

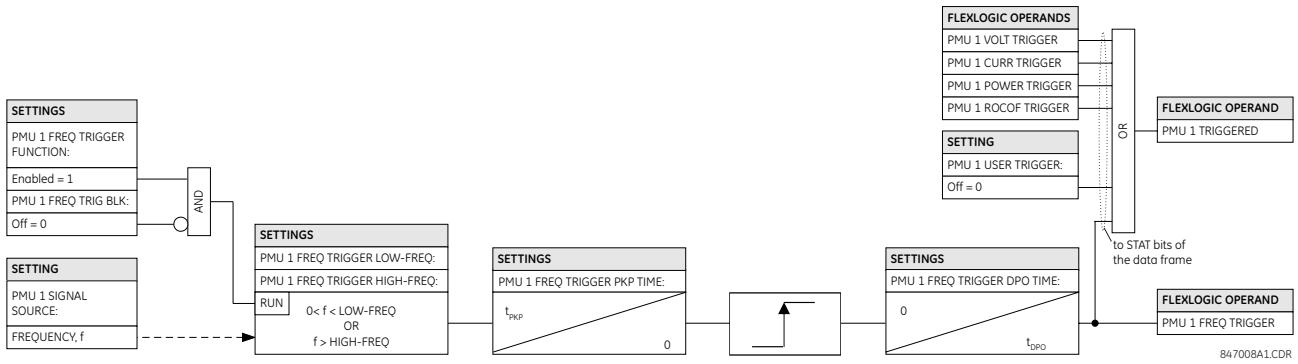

Figure 5–47: FREQUENCY TRIGGER SCHEME LOGIC

g) VOLTAGE TRIGGERING

PATH: SETTINGS ⇨⇩ SYSTEM SETUP ⇨⇩ PHASOR MEASUREMENT... ⇨⇩ PMU 1 TRIGGERING ⇨⇩ PMU 1 VOLTAGE TRIGGER

```
■ PMU 1 VOLTAGE
■ TRIGGER
```

```
PMU 1 VOLT TRIGGER
FUNCTION: Disabled
```
Range: Enabled, Disabled

MESSAGE
```
PMU 1 VOLT TRIGGER
LOW-VOLT: 0.800 pu
```
Range: 0.250 to 1.250 pu in steps of 0.001

MESSAGE
```
PMU 1 VOLT TRIGGER
HIGH-VOLT: 1.200 pu
```
Range: 0.750 to 1.750 pu in steps of 0.001

MESSAGE
```
PMU 1 VOLT TRIGGER
PKP TIME: 0.10 s
```
Range: 0.00 to 600.00 s in steps of 0.01

MESSAGE
```
PMU 1 VOLT TRIGGER
DPO TIME: 1.00 s
```
Range: 0.00 to 600.00 s in steps of 0.01

MESSAGE
```
PMU 1 VOLT TRIG BLK:
Off
```
Range: FlexLogic operand

MESSAGE
```
PMU 1 VOLT TRIGGER
TARGET: Self-reset
```
Range: Self-reset, Latched, Disabled

MESSAGE
```
PMU 1 VOLT TRIGGER
EVENTS: Disabled
```
Range: Enabled, Disabled

This element responds to abnormal voltage. Separate thresholds are provided for low and high voltage. In terms of signaling its operation, the element does not differentiate between the undervoltage and overvoltage events. The trigger responds to the phase voltage signal of the phasor measurement unit (PMU) source. All voltage channels (A, B, and C or AB, BC, and CA) are processed independently and can trigger the recorder. A minimum voltage supervision of 0.1 pu is implemented to prevent pickup on a de-energized circuit, similarly to the undervoltage protection element.

- **PMU 1 VOLT TRIGGER LOW-VOLT**: This setting specifies the low threshold for the abnormal voltage trigger, in per-unit of the PMU source. 1 pu is a nominal voltage value defined as the nominal secondary voltage times VT ratio. The comparator applies a 1% hysteresis.
- **PMU 1 VOLT TRIGGER HIGH-VOLT**: This setting specifies the high threshold for the abnormal voltage trigger, in per-unit of the PMU source. 1 pu is a nominal voltage value defined as the nominal secondary voltage times VT ratio. The comparator applies a 1% hysteresis.
- **PMU 1 VOLT TRIGGER PKP TIME**: This setting can bused to filter out spurious conditions and avoid unnecessary triggering of the recorder.
- **PMU 1 VOLT TRIGGER DPO TIME**: This setting can be used to extend the trigger after the situation returned to normal. This setting is of particular importance when using the recorder in the forced mode (recording as long as the triggering condition is asserted).

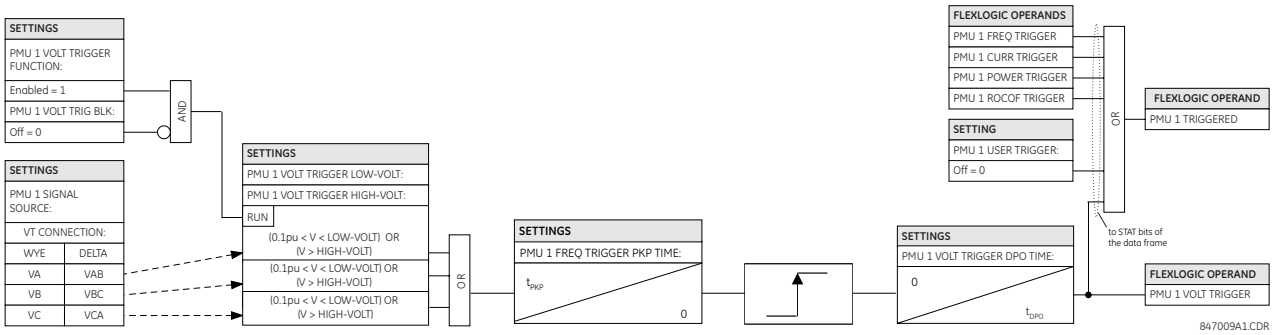

Figure 5–48: VOLTAGE TRIGGER SCHEME LOGIC

h) CURRENT TRIGGERING

PATH: SETTINGS ⇨⇩ SYSTEM SETUP ⇨⇩ PHASOR MEASUREMENT... ⇨⇩ PMU 1 TRIGGERING ⇨⇩ PMU 1 CURRENT TRIGGER

■ PMU 1 CURRENT TRIGGER	◀▶	PMU 1 CURR TRIGGER FUNCTION: Disabled	*Range: Enabled, Disabled*
	MESSAGE ▲▼	PMU 1 CURR TRIGGER PICKUP: 1.800 pu	*Range: 0.100 to 30.000 pu in steps of 0.001*
	MESSAGE ▲▼	PMU 1 CURR TRIGGER PKP TIME: 0.10 s	*Range: 0.00 to 600.00 s in steps of 0.01*
	MESSAGE ▲▼	PMU 1 CURR TRIGGER DPO TIME: 1.00 s	*Range: 0.00 to 600.00 s in steps of 0.01*
	MESSAGE ▲▼	PMU 1 CURR TRIG BLK: Off	*Range: FlexLogic operand*
	MESSAGE ▲▼	PMU 1 CURR TRIGGER TARGET: Self-reset	*Range: Self-reset, Latched, Disabled*
	MESSAGE ▲	PMU 1 CURR TRIGGER EVENTS: Disabled	*Range: Enabled, Disabled*

This element responds to elevated current. The trigger responds to the phase current signal of the phasor measurement unit (PMU) source. All current channel (A, B, and C) are processed independently and could trigger the recorder.

- **PMU 1 CURR TRIGGER PICKUP**: This setting specifies the pickup threshold for the overcurrent trigger, in per unit of the PMU source. A value of 1 pu is a nominal primary current. The comparator applies a 3% hysteresis.
- **PMU 1 CURR TRIGGER PKP TIME**: This setting can be used to filter out spurious conditions and avoid unnecessary triggering of the recorder.
- **PMU 1 CURR TRIGGER DPO TIME**: This setting can be used to extend the trigger after the situation returned to normal. This setting is of particular importance when using the recorder in the forced mode (recording as long as the triggering condition is asserted).

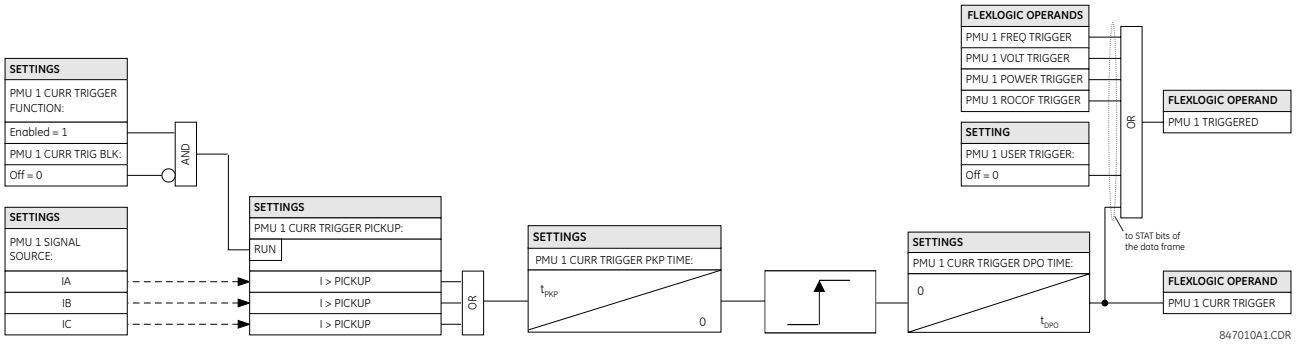

Figure 5–49: CURRENT TRIGGER SCHEME LOGIC

5

i) POWER TRIGGERING

PATH: SETTINGS ⇨⇩ SYSTEM SETUP ⇨⇩ PHASOR MEASUREMENT... ⇨⇩ PMU 1 TRIGGERING ⇨⇩ PMU 1 POWER TRIGGER

■ PMU 1 POWER ■ TRIGGER	◀▶	PMU 1 POWER TRIGGER FUNCTION: Disabled — *Range: Enabled, Disabled*
MESSAGE	▲▼	PMU 1 POWER TRIGGER ACTIVE: 1.250 pu — *Range: 0.250 to 3.000 pu in steps of 0.001*
MESSAGE	▲▼	PMU 1 POWER TRIGGER REACTIVE: 1.250 pu — *Range: 0.250 to 3.000 pu in steps of 0.001*
MESSAGE	▲▼	PMU 1 POWER TRIGGER APPARENT: 1.250 pu — *Range: 0.250 to 3.000 pu in steps of 0.001*
MESSAGE	▲▼	PMU 1 POWER TRIGGER PKP TIME: 0.10 s — *Range: 0.00 to 600.00 s in steps of 0.01*
MESSAGE	▲▼	PMU 1 POWER TRIGGER DPO TIME: 1.00 s — *Range: 0.00 to 600.00 s in steps of 0.01*
MESSAGE	▲▼	PMU 1 PWR TRIG BLK: Off — *Range: FlexLogic operand*
MESSAGE	▲▼	PMU 1 POWER TRIGGER TARGET: Self-reset — *Range: Self-reset, Latched, Disabled*
MESSAGE	▲	PMU 1 POWER TRIGGER EVENTS: Disabled — *Range: Enabled, Disabled*

This element responds to abnormal power. Separate thresholds are provided for active, reactive, and apparent powers. In terms of signaling its operation the element does not differentiate between the three types of power. The trigger responds to the single-phase and three-phase power signals of the phasor measurement unit (PMU) source.

- **PMU 1 POWER TRIGGER ACTIVE**: This setting specifies the pickup threshold for the active power of the source. For single-phase power, 1 pu is a product of 1 pu voltage and 1 pu current, or the product of nominal secondary voltage, the VT ratio and the nominal primary current. For the three-phase power, 1 pu is three times that for a single-phase power. The comparator applies a 3% hysteresis.

- **PMU 1 POWER TRIGGER REACTIVE**: This setting specifies the pickup threshold for the reactive power of the source. For single-phase power, 1 pu is a product of 1 pu voltage and 1 pu current, or the product of nominal secondary voltage, the VT ratio and the nominal primary current. For the three-phase power, 1 pu is three times that for a single-phase power. The comparator applies a 3% hysteresis.
- **PMU 1 POWER TRIGGER APPARENT**: This setting specifies the pickup threshold for the apparent power of the source. For single-phase power, 1 pu is a product of 1 pu voltage and 1 pu current, or the product of nominal secondary voltage, the VT ratio and the nominal primary current. For the three-phase power, 1 pu is three times that for a single-phase power. The comparator applies a 3% hysteresis.
- **PMU 1 POWER TRIGGER PKP TIME**: This setting can be used to filter out spurious conditions and avoid unnecessary triggering of the recorder.
- **PMU 1 POWER TRIGGER DPO TIME**: This setting can be used to extend the trigger after the situation returned to normal. This setting is of particular importance when using the recorder in the forced mode (recording as long as the triggering condition is asserted).

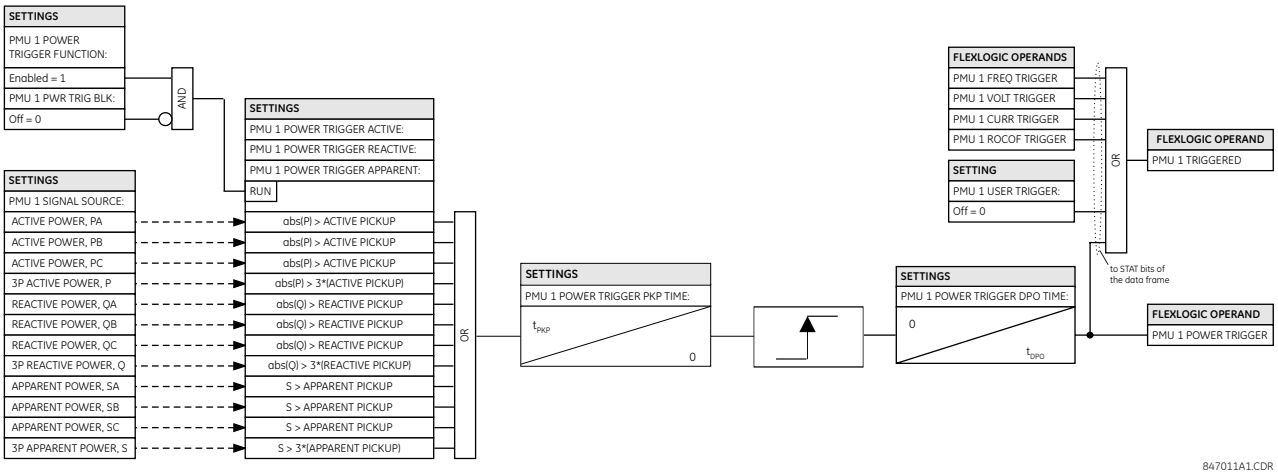

Figure 5–50: POWER TRIGGER SCHEME LOGIC

j) DF/DT TRIGGERING

PATH: SETTINGS ⇨⇩ SYSTEM SETUP ⇨⇩ PHASOR MEASUREMENT... ⇨⇩ PMU 1 TRIGGERING ⇨⇩ PMU 1 df/dt TRIGGER

■ PMU 1 df/dt TRIGGER		PMU 1 df/dt TRIGGER FUNCTION: Disabled	*Range: Enabled, Disabled*
	MESSAGE	PMU 1 df/dt TRIGGER RAISE: 0.25 Hz/s	*Range: 0.10 to 15.00 Hz/s in steps of 0.01*
	MESSAGE	PMU 1 df/dt TRIGGER FALL: 0.25 Hz/s	*Range: 0.10 to 15.00 Hz/s in steps of 0.01*
	MESSAGE	PMU 1 df/dt TRIGGER PKP TIME: 0.10 s	*Range: 0.00 to 600.00 s in steps of 0.01*
	MESSAGE	PMU 1 df/dt TRIGGER DPO TIME: 1.00 s	*Range: 0.00 to 600.00 s in steps of 0.01*
	MESSAGE	PMU 1 df/dt TRG BLK: Off	*Range: FlexLogic operand*
	MESSAGE	PMU 1 df/dt TRIGGER TARGET: Self-reset	*Range: Self-reset, Latched, Disabled*
	MESSAGE	PMU 1 df/dt TRIGGER EVENTS: Disabled	*Range: Enabled, Disabled*

This element responds to frequency rate of change. Separate thresholds are provided for rising and dropping frequency. The trigger responds to the rate of change of frequency (df/dt) of the phasor measurement unit (PMU) source.

- **PMU 1 df/dt TRIGGER RAISE**: This setting specifies the pickup threshold for the rate of change of frequency in the raising direction (positive df/dt). The comparator applies a 4% hysteresis.
- **PMU 1 df/dt TRIGGER FALL**: This setting specifies the pickup threshold for the rate of change of frequency in the falling direction (negative df/dt). The comparator applies a 4% hysteresis.
- **PMU 1 df/dt TRIGGER PKP TIME**: This setting can be used to filter out spurious conditions and avoid unnecessary triggering of the recorder.
- **PMU 1 df/dt TRIGGER DPO TIME**: This setting can be used to extend the trigger after the situation returned to normal. This setting is of particular importance when using the recorder in the forced mode (recording as long as the triggering condition is asserted).

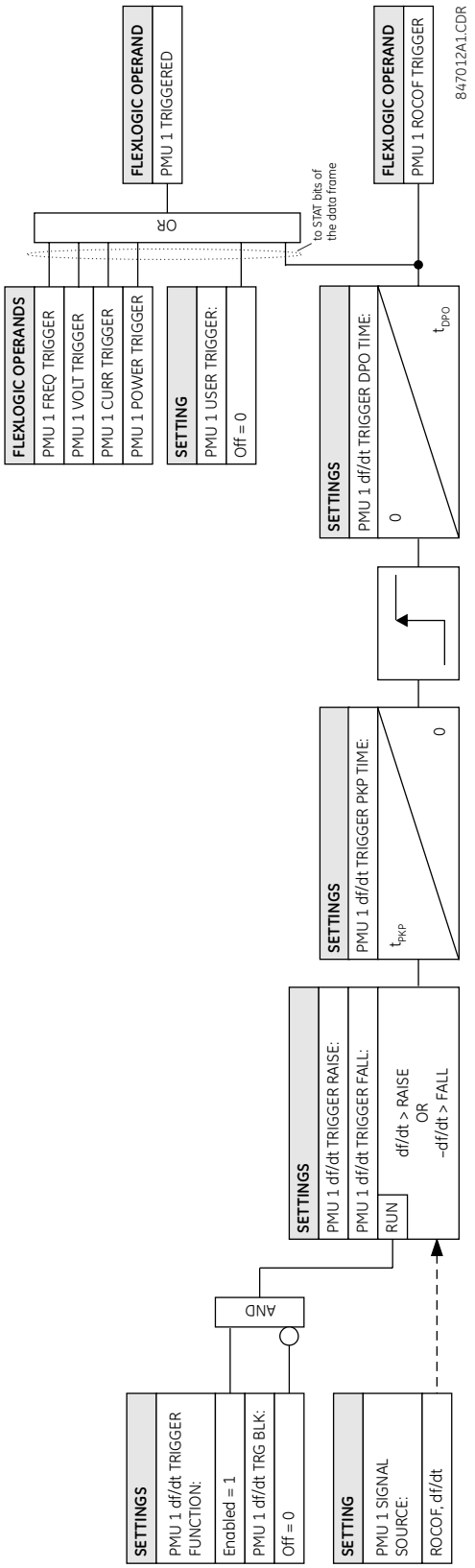

Figure 5–51: RATE OF CHANGE OF FREQUENCY TRIGGER SCHEME LOGIC

k) PMU RECORDING

PATH: SETTINGS ⇨⇩ SYSTEM SETUP ⇨ PHASOR MEASUREMENT⇨⇩ PHASOR MEASUREMENT UNIT1 ⇩ RECORDING PMU1

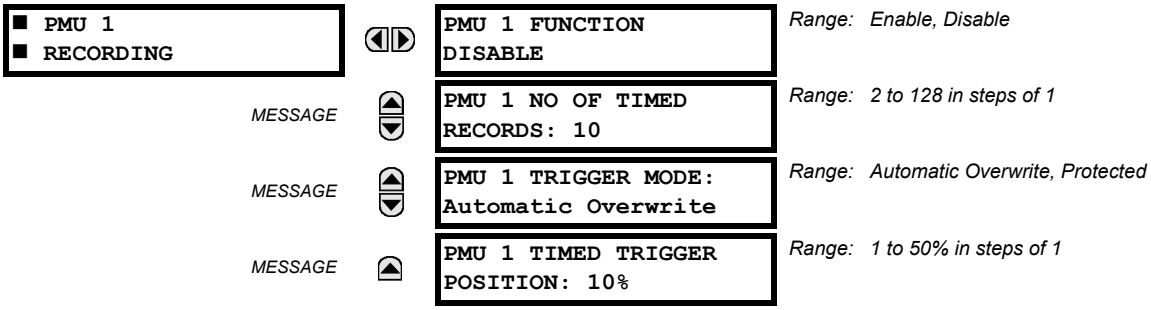

The length of the PMU record is variable and depends on some settings and configuration, such as **PMU 1 NO OF TIMED RECORDS**, **PMU 1 RATE**, number of Synchrophasors, Analogs and Digitals configured in each PMU. There is a fixed amount of data storage for PMU recording; the more records captured, the less the recording length captured per record. See the ACTUAL VALUES ⇨ RECORDS ⇨⇩ PMU RECORDS ⇨ PMU 1 RECORDING menu to view the actual PMU record length captured per record. The following table provides sample configurations with corresponding seconds per record. The minimum number of PMU records is two. The third to fifth columns is the number of configured values recorded in each record.

Table 5–15: PMU RECORD LENGTH EXAMPLE

RECORDS	FRAMES PER SECOND	SYNCHROPHASORS	ANALOGS	DIGITALS	RECORD LENGTH (SECONDS)
3	30	14	8	16	590.4
16	30	14	8	16	138.9
32	30	14	8	16	71.5
64	30	14	8	16	36.3
3	60	14	8	16	295.2
16	60	14	8	16	69.4
32	60	14	8	16	35.7
64	60	14	8	16	18.1

- **PMU 1 FUNCTION**: This setting enables or disables the recorder for PMU 1. The rate is fixed at the reporting rate set within the aggregator (that is, Aggregator 1).
- **PMU 1 NO OF TIMED RECORDS**: This setting specifies the number of timed records that are available for a given logical PMU 1. The length of each record is equal to the available memory divided by the content size and number of records. As the number of records is increased the available storage for each record is reduced. The relay supports a maximum of 128 records in either timed or forced mode.
- **PMU 1 TRIGGER MODE**: This setting specifies what happens when the recorder uses its entire available memory storage. Under the “Automatic Overwrite”, the last record is erased to facilitate new recording, when triggered. Under the “Protected” selection, the recorder stops creating new records when the entire memory is used up by the old uncleared records.
- **PMU 1 TIMED TRIGGER POSITION**: This setting specifies the amount of pre-trigger data as a percent of the entire record. This setting applies only to the timed mode of recording.

l) AGGREGATORS

PATH: SETTINGS ⇨⇩ SYSTEM SETUP ⇨⇩ PHASOR MEASUREMENT UNIT ⇨⇩ PMU AGGREGATOR 1

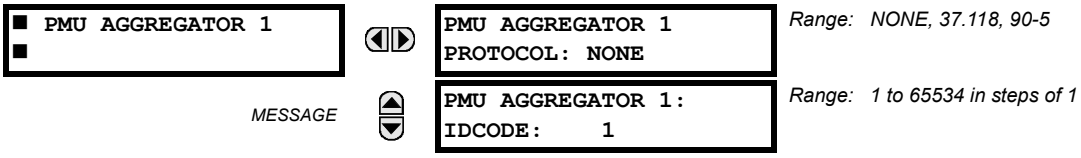

MESSAGE
PMU AGGREGATOR 1
INCLUDE PMU1: No
Range: No, Yes

MESSAGE
■ C37.118 AGGR 1
■ CONFIGURATION
See below.

MESSAGE
■ 90-5 AGGR 1
■ CONFIGURATION
See below.

NOTE When the protocol selection is set via the software or keypad, all aggregators whose protocol is not set to None are set to the last protocol saved (that is, IEEE C37.118 or IEC 61850-90-5) to any aggregators, as both IEEE C37.118 and IEC 61850-90-5 simultaneous streaming is not possible.

PATH: SETTINGS ⇨⇩ SYSTEM SETUP ⇨⇩ PHASOR MEASUREMENT UNIT ⇨⇩ PMU AGGREGATOR 1 ⇨⇩ C37.118 AGGR 1 CONFIGURATION

■ C37.118 AGGR 1
■ CONFIGURATION

PMU AGGREGATOR 1
TCP PORT: 4712
Range: 1 to 65534

MESSAGE
PMU AGGREGATOR 1
UDP PORT: 4713
Range: 1 to 65534

MESSAGE
PMU AGGREGATOR 1
PDC CONTROL: Disabled
Range: Disabled, Enabled

PATH: SETTINGS ⇨⇩ SYSTEM SETUP ⇨⇩ PHASOR MEASUREMENT UNIT ⇨⇩ PMU AGGREGATOR 1 ⇨⇩ 90-5 AGGR 1 CONFIGURATION

■ 90-5 AGGR 1
■ CONFIGURATION

PMU AGGREGATOR 1
NAME:
Range: 56 character ASCII text

MESSAGE
PMU AGGREGATOR 1
PORT: 1
Range: 1, 2, 3

MESSAGE
PMU AGGREGATOR 1
UDP PORT: 102
Range: 1 to 65534 in steps of 1

MESSAGE
PMU AGGREGATOR 1
NUMBER OF ASDUs: 1
Range: 1 to 4

- **PMU AGGREGATOR 1 PROTOCOL**: This setting selects if the IEEE C37.118 or IEC 61850-90-5 standard is used. Because one protocol is supported at a time in a device, this setting applies to all PMU aggregators.
- **PMU AGGREGATOR 1 IDCODE**: Numeric identifier of the Aggregator / PDC function. In an IEEE C37.118 output stream, this identifies the ID of the aggregator, which is only used if there is more than 1 PMU mapped into an aggregator.
- **PMU AGGREGATOR 1 PMU1**: If set to “Yes” aggregator 1 includes the PMU 1 data set in the reporting data stream. AGGREGATOR 1 does not include PMU 1 data set in the report if set to “No”.

NOTE Only PMUs with same reporting rate can be assigned to the same PMU AGGREGATOR.

C37.118 AGGREGATOR 1 CONFIGURATION

- **PMU AGGREGATOR 1 TCP PORT**: This setting selects the TCP port number to be used by this aggregator for network reporting. All ports, even those of unused aggregators, must be valid and unique to avoid port number collisions.
- **PMU AGGREGATOR 1 UDP PORT**: This setting selects the UDP port number to be used by this aggregator for network reporting. All ports, even those of unused aggregators, must be valid and unique to avoid port number collisions.
- **PMU AGGREGATOR 1 PDC CONTROL**: The synchrophasor standard allows for user-defined controls originating at the PDC, to be executed on the PMU. The control is accomplished via an extended command frame. The relay decodes the first word of the extended field, EXTFRAME, to drive 16 dedicated FlexLogic operands. Each aggregator supports 16 FlexLogic operands as shown in the table. The operands are asserted for 5 seconds following reception of

the command frame. If the new command frame arrives within the 5 second period, the FlexLogic operands are updated, and the 5 second timer is restarted. This setting enables or disables the control. When enabled, all 16 operands for each aggregator are active; when disabled all 16 operands for each aggregator remain reset.

Table 5–16: FLEXLOGIC OPERANDS SUPPORTED BY AGGREGATOR

OPERAND TYPE	OPERAND SYNTAX	OPERAND DESCRIPTION
ELEMENT: Synchrophasor, phasor data, concentrator	AGTR1 PDC CNTRL 1	Phasor data concentrator asserts control bit 1, as received via the network.
as above	AGTR1 PDC CNTRL 2	Phasor data concentrator asserts control bit 2 as received via the network.
as above	AGTR1 PDC CNTRL 3	Phasor data concentrator asserts control bit 3 as received via the network.
	↓	
as above	AGTR1 PDC CNTRL 16	Phasor data concentrator asserts control bit 16, as received via the network.
as above	AGTR2 PDC CNTRL 1	Phasor data concentrator asserts control bit 1 as received via the network
as above	AGTR2 PDC CNTRL 2	Phasor data concentrator asserts control bit 2 as received via the network
as above	AGTR2 PDC CNTRL 3	Phasor data concentrator asserts control bit 3 as received via the network.
	↓	
as above	AGTR1 PDC CNTRL 16	Phasor data concentrator asserts control bit 16, as received via the network.

IEC 61850-90-5 AGGREGATOR 1 CONFIGURATION

- **PMU AGGREGATOR 1 NAME:** A user-defined visible string of characters (maximum 56) to identify the source of the stream. This value, concatenated with the Aggregator IDCode and Aggregator Class of Service, is mapped into the IEC 61850 MSVID filed in the output stream. The field allows 65 characters, but uses the first 56 characters.
- **AGGREGATOR 1 PHYSICAL PORT:** This setting determines the physical ports through which the synchrophasor traffic is transmitted. The range is 1, 2, 3.
- **PMU AGGREGATOR 1 UDP:** This setting selects the UDP port number that is used by this dataset for network reporting. A default setting value for IEC 6150-90-5 is provided.
- **PMU AGGREGATOR 1 NUMBER OF ASDUs:** This setting sets the number of Application Service Data Units (ASDUs) from 1 through to 4.

Table 5–17: NUMBER OF ASDU

SETTINGS FOR ASDU	TRANSMISSION
1	ASDU at T0 (current values)
2	ASDU at T-1 (previous values) + ASDU at T0 (current values)
3	ASDU at T-2 (previous values) + ASDU at T-1 (previous values) + ASDU at T0 (current values)
4	ASDU at T-3 (previous values) + ASDU at T-2 (previous values) + ASDU at T-1 (previous values) + ASDU at T0 (current values)

m) CONTROL BLOCKS

PATH: SETTINGS ⇨⇩ SYSTEM SETUP ⇨⇩ PHASOR MEASUREMENT UNIT ⇨⇩ IEC 90–5 MSVCB 1 CONFIGURATION

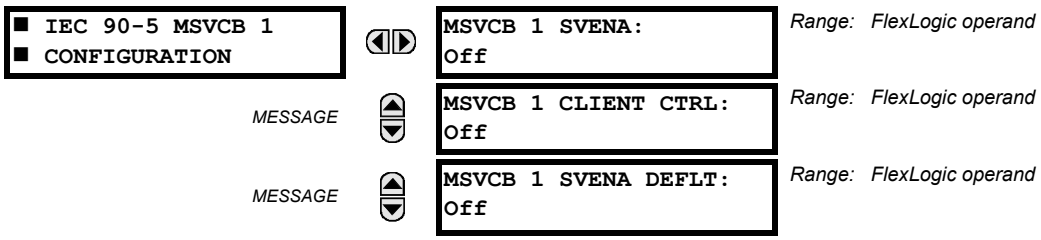

MESSAGE
MSVCB 1 CONFREV:
1
Range: 1 to 4294967295

MESSAGE
MSVCB 1 PRIORITY:
4
Range: 0 to 7

MESSAGE
MSVCB 1 DSCP CLASS:
Expedited Forwarding
Range: None, Expedited Forwarding

MESSAGE
MSVCB 1 VLAN ID:
0
Range: 0 to 4095

MESSAGE
MSVCB 1 APPID:
0
Range: 0 to 16383

MESSAGE
MSVCB 1 DEST IP:
224.0.0.0
Range: 0 to 255.255.255.255

MESSAGE
MSVCB 1 SECURITY:
0
Range: 0 to 2

- **MSVCB 1 SVENA:** The SV Stream Control is set by either toggling an assigned FlexLogic operand or a remote client write, to start and stop the streaming of R-SV frames. If remote client control is disabled, a negative response is provided to the client in response to a write attempt. A FlexLogic operand (SvEna) is provided for each Aggregator that reflects the state of the SvEna control where "1"= Enabled and "0"=Disabled. The logic for setting the SvEna control bit is shown in the following figure.

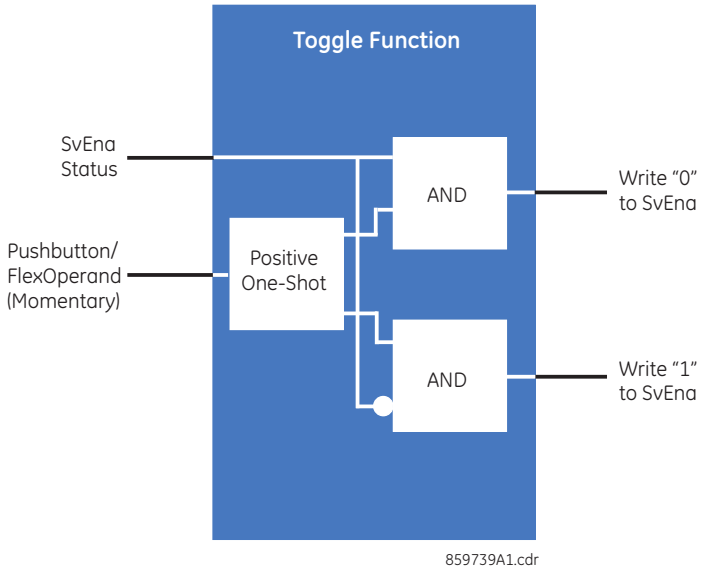

Figure 5–52: LOGIC FOR SETTING SVENA CONTROL BIT

- **MSVCB 1 CLIENT CTRL:** This setting determines if a client can write to the reserve bit. When the assigned FlexLogic operand is a logic 1 state, remote clients can write to both the reserve bit and the SvEna bit. When the FlexLogic operand is a logic 0 state, the remote client writes to the reserve bit, the SvEna is rejected by the UR, and a negative response with the appropriate Service Error is returned to the client.
- **MSVCB 1 SVENA DEFLT:** This setting sets the default state of the stream (On or Off) on power-up or restart.
- **MSVCB 1 CONFREV:** The relay increments the Configuration revision every time the configuration is changed. This setting allows the user to reset the configuration back to 1 or a value from 1 to 4294967295.
- **MSVCB 1 PRIORITY:** A value from 0 through 7: The default value is 4.
- **MSVCB 1 DSCP Class:** The value represents the IPv4 Differentiated Services (formerly called TypeOfService) value. The default value is set for Expedited Forwarding (101110B (46 or 2EH). This value provides priority routing, when supported in the routers.

- **MSVCB 1 VLAN ID:** A range of values limited from 0 to 4095.
- **MSVCB 1 APPID:** This setting allows the selection of a specific application ID for each sending device.
- **MSVCB 1 DEST IP:** This is the destination multicast address IP address that is entered in Standard IPV4 address format. The valid range for IPv4 is from 224.0.0.0 to 239.255.255.255, but the UR does not test the address entered.
- **MSVCB 1 SECURITY:** This setting selects the level of security and authentication used, as outlined in the following table, and is in the form of an enumeration as per standard. The range is 0 to 2.

NOTE

Shaded settings in the table are not supported in firmware 7.0.

ENUMERATION	AUTHENTICATION	ENCRYPTION
0	no	no
1	yes	no
2	yes	yes

5.5.1 INTRODUCTION TO FLEXLOGIC

To provide maximum flexibility to the user, the arrangement of internal digital logic combines fixed and user-programmed parameters. Logic upon which individual features are designed is fixed, and all other logic, from digital input signals through elements or combinations of elements to digital outputs, is variable. The user has complete control of all variable logic through FlexLogic. In general, the system receives analog and digital inputs which it uses to produce analog and digital outputs. The major sub-systems of a generic UR-series relay involved in this process are shown below.

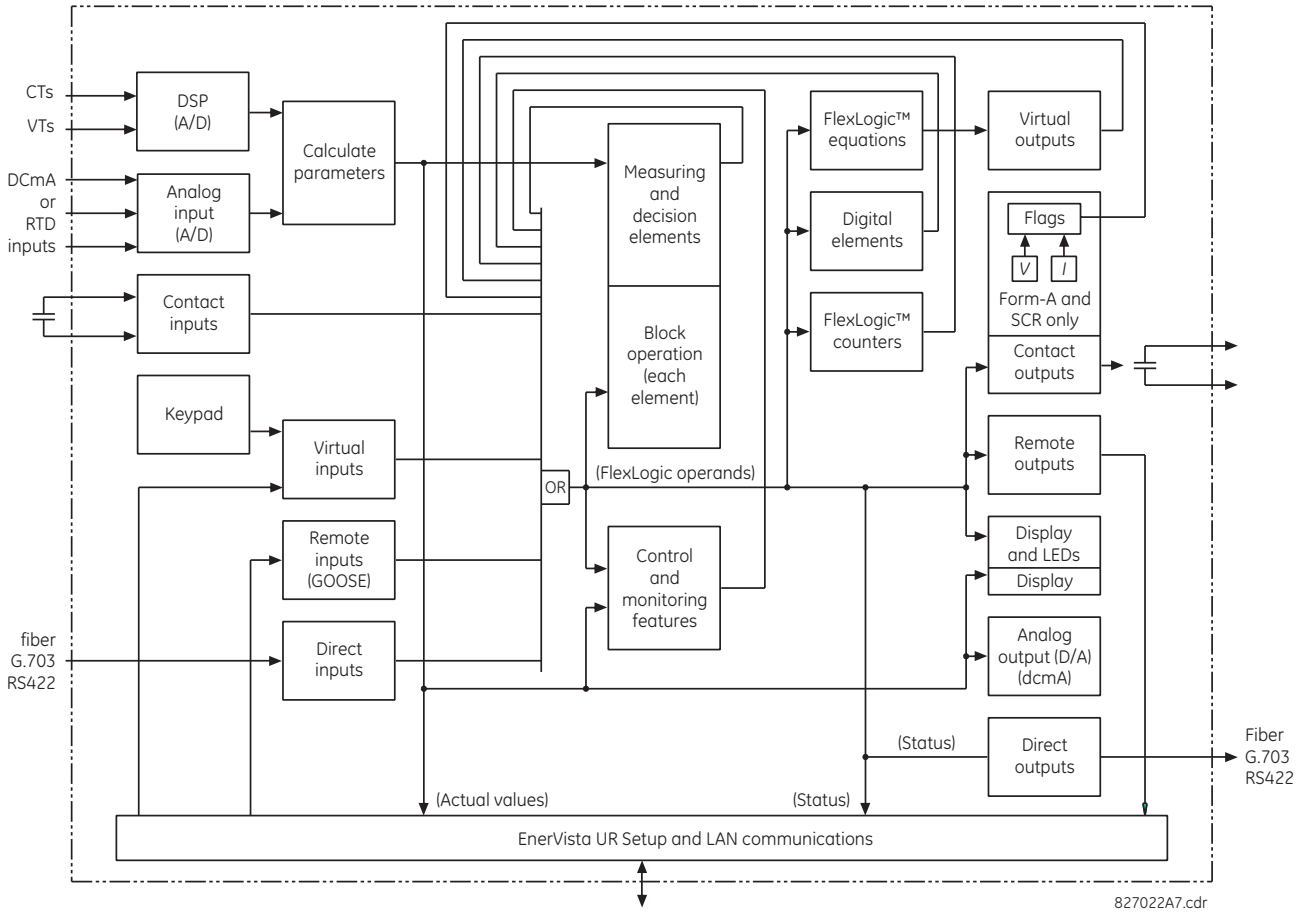

Figure 5–53: UR ARCHITECTURE OVERVIEW

The states of all digital signals used in the G60 are represented by flags (or FlexLogic operands, which are described later in this section). A digital "1" is represented by a 'set' flag. Any external contact change-of-state can be used to block an element from operating, as an input to a control feature in a FlexLogic equation, or to operate a contact output. The state of the contact input can be displayed locally or viewed remotely via the communications facilities provided. If a simple scheme where a contact input is used to block an element is desired, this selection is made when programming the element. This capability also applies to the other features that set flags: elements, virtual inputs, remote inputs, schemes, and human operators.

If more complex logic than presented above is required, it is implemented via FlexLogic. For example, if it is desired to have the closed state of contact input H7a and the operated state of the phase undervoltage element block the operation of the phase time overcurrent element, the two control input states are programmed in a FlexLogic equation. This equation ANDs the two control inputs to produce a virtual output which is then selected when programming the phase time overcurrent to be used as a blocking input. Virtual outputs can only be created by FlexLogic equations.

Traditionally, protective relay logic has been relatively limited. Any unusual applications involving interlocks, blocking, or supervisory functions had to be hard-wired using contact inputs and outputs. FlexLogic minimizes the requirement for auxiliary components and wiring while making more complex schemes possible.

The logic that determines the interaction of inputs, elements, schemes and outputs is field programmable through the use of logic equations that are sequentially processed. The use of virtual inputs and outputs in addition to hardware is available internally and on the communication ports for other relays to use (distributed FlexLogic).

FlexLogic allows users to customize the relay through a series of equations that consist of *operators* and *operands*. The operands are the states of inputs, elements, schemes and outputs. The operators are logic gates, timers and latches (with set and reset inputs). A system of sequential operations allows any combination of specified operands to be assigned as inputs to specified operators to create an output. The final output of an equation is a numbered register called a *virtual output*. Virtual outputs can be used as an input operand in any equation, including the equation that generates the output, as a seal-in or other type of feedback.

A FlexLogic equation consists of parameters that are either operands or operators. Operands have a logic state of 1 or 0. Operators provide a defined function, such as an AND gate or a Timer. Each equation defines the combinations of parameters to be used to set a Virtual Output flag. Evaluation of an equation results in either a 1 (=ON, i.e. flag set) or 0 (=OFF, i.e. flag not set). Each equation is evaluated at least 4 times every power system cycle.

Some types of operands are present in the relay in multiple instances; e.g. contact and remote inputs. These types of operands are grouped together (for presentation purposes only) on the faceplate display. The characteristics of the different types of operands are listed in the table below.

Table 5–18: G60 FLEXLOGIC OPERAND TYPES

OPERAND TYPE	STATE	EXAMPLE FORMAT	CHARACTERISTICS [INPUT IS '1' (= ON) IF...]
Contact Input	On	Cont Ip On	Voltage is presently applied to the input (external contact closed)
	Off	Cont Ip Off	Voltage is presently not applied to the input (external contact open)
Contact Output (type Form-A contact only)	Contact Closed	Cont Op 1 Closed	Contact output is closed
	Current On	Cont Op 1 Ion	Current is flowing through the contact
	Voltage On	Cont Op 1 VOn	Voltage exists across the contact
	Voltage Off	Cont Op 1 VOff	Voltage does not exists across the contact
Direct Input	On	DIRECT INPUT 1 On	The direct input is presently in the ON state
Element (Analog)	Pickup	PHASE TOC1 PKP	The tested parameter is presently above the pickup setting of an element which responds to rising values or below the pickup setting of an element which responds to falling values
	Dropout	PHASE TOC1 DPO	This operand is the logical inverse of the above PKP operand
	Operate	PHASE TOC1 OP	The tested parameter has been above/below the pickup setting of the element for the programmed delay time, or has been at logic 1 and is now at logic 0 but the reset timer has not finished timing
	Block	PHASE TOC1 BLK	The output of the comparator is set to the block function
Element (Digital)	Pickup	Dig Element 1 PKP	The input operand is at logic 1
	Dropout	Dig Element 1 DPO	This operand is the logical inverse of the above PKP operand
	Operate	Dig Element 1 OP	The input operand has been at logic 1 for the programmed pickup delay time, or has been at logic 1 for this period and is now at logic 0 but the reset timer has not finished timing
Element (Digital Counter)	Higher than	Counter 1 HI	The number of pulses counted is above the set number
	Equal to	Counter 1 EQL	The number of pulses counted is equal to the set number
	Lower than	Counter 1 LO	The number of pulses counted is below the set number
Fixed	On	On	Logic 1
	Off	Off	Logic 0
Remote Input	On	REMOTE INPUT 1 On	The remote input is presently in the ON state
Virtual Input	On	Virt Ip 1 On	The virtual input is presently in the ON state
Virtual Output	On	Virt Op 1 On	The virtual output is presently in the set state (i.e. evaluation of the equation which produces this virtual output results in a "1")

The operands available for this relay are listed alphabetically by types in the following table.

Table 5–19: G60 FLEXLOGIC OPERANDS (Sheet 1 of 10)

OPERAND TYPE	OPERAND SYNTAX	OPERAND DESCRIPTION
CONTROL PUSHBUTTONS	CONTROL PUSHBTN 1 ON CONTROL PUSHBTN 2 ON CONTROL PUSHBTN 3 ON CONTROL PUSHBTN 4 ON CONTROL PUSHBTN 5 ON CONTROL PUSHBTN 6 ON CONTROL PUSHBTN 7 ON	Control pushbutton 1 is being pressed Control pushbutton 2 is being pressed Control pushbutton 3 is being pressed Control pushbutton 4 is being pressed Control pushbutton 5 is being pressed Control pushbutton 6 is being pressed Control pushbutton 7 is being pressed
CYBERSENTRY	ROLE ADMIN ACT ROLE SUPERVISOR ACT ROLE ENGINEER ACT ROLE OPERATOR ACT ROLE OBSERVER ACT AUTHENTICATION FAIL UNAUTH FW ATTEMPT UNAUTH SETTING WRITE	Administrator role is active and is set to true when that is the case Supervisor role is active and is set to true when that is the case Engineer role is active and is set to true when that is the case Operator role is active and is set to true when that is the case Observer role is active and is set to true when that is the case Operand set for Failed Authentication self-test and alarm Operand set for firmware lock self-test and alarm Operand set for settings lock self-test and alarm
DIRECT DEVICES	DIRECT DEVICE 1On ↓ DIRECT DEVICE 16On DIRECT DEVICE 1Off ↓ DIRECT DEVICE 16Off	Flag is set, logic=1 ↓ Flag is set, logic=1 Flag is set, logic=1 ↓ Flag is set, logic=1
DIRECT INPUT/ OUTPUT CHANNEL MONITORING	DIR IO CH1 CRC ALARM DIR IO CH2 CRC ALARM DIR IO CH1 UNRET ALM DIR IO CH2 UNRET ALM	The rate of direct input messages received on channel 1 and failing the CRC exceeded the user-specified level The rate of direct input messages received on channel 2 and failing the CRC exceeded the user-specified level The rate of returned direct input/output messages on channel 1 exceeded the user-specified level (ring configurations only) The rate of returned direct input/output messages on channel 2 exceeded the user-specified level (ring configurations only)
ELEMENT: 100% stator ground	100% STATOR STG1 PKP 100% STATOR STG1 OP 100% STATOR STG1 DPO 100% STATOR STG2 PKP 100% STATOR STG2 OP 100% STATOR STG2 DPO 100% STATOR PKP 100% STATOR OP 100% STATOR DPO	Stage 1 of the 100% stator ground element has picked up Stage 1 of the 100% stator ground element has operated Stage 1 of the 100% stator ground element has dropped out Stage 2 of the 100% stator ground element has picked up Stage 2 of the 100% stator ground element has operated Stage 2 of the 100% stator ground element has dropped out The 100% stator ground element has picked up The 100% stator ground element has operated The 100% stator ground element has dropped out
ELEMENT: Third harmonic neutral undervoltage	3RD HARM NTRL UV PKP 3RD HARM NTRL UV OP 3RD HARM NTRL UV DPO	Third harmonic neutral undervoltage element has picked up Third harmonic neutral undervoltage element has operated Third harmonic neutral undervoltage element has dropped out
ELEMENT: Accidental energization	ACCDNT ENRG ARMED ACCDNT ENRG DPO ACCDNT ENRG OP	The accidental energization element is armed The accidental energization element has dropped out The accidental energization element has operated
ELEMENT: Auxiliary overvoltage	AUX OV1 PKP AUX OV1 DPO AUX OV1 OP	Auxiliary overvoltage element has picked up Auxiliary overvoltage element has dropped out Auxiliary overvoltage element has operated
	AUX OV2	Same set of operands as shown for AUX OV1
ELEMENT: Auxiliary undervoltage	AUX UV1 PKP AUX UV1 DPO AUX UV1 OP	Auxiliary undervoltage element has picked up Auxiliary undervoltage element has dropped out Auxiliary undervoltage element has operated
	AUX UV2	Same set of operands as shown for AUX UV1
ELEMENT Breaker flashover	BKR 1 FLSHOVR PKP A BKR 1 FLSHOVR PKP B BKR 1 FLSHOVR PKP C BKR 1 FLSHOVR PKP BKR 1 FLSHOVR OP A BKR 1 FLSHOVR OP B BKR 1 FLSHOVR OP C BKR 1 FLSHOVR OP BKR 1 FLSHOVR DPO A BKR 1 FLSHOVR DPO B BKR 1 FLSHOVR DPO C BKR 1 FLSHOVR DPO	Breaker 1 flashover element phase A has picked up Breaker 1 flashover element phase B has picked up Breaker 1 flashover element phase C has picked up Breaker 1 flashover element has picked up Breaker 1 flashover element phase A has operated Breaker 1 flashover element phase B has operated Breaker 1 flashover element phase C has operated Breaker 1 flashover element has operated Breaker 1 flashover element phase A has dropped out Breaker 1 flashover element phase B has dropped out Breaker 1 flashover element phase C has dropped out Breaker 1 flashover element has dropped out
	BKR 2 FLSHOVR	Same set of operands as shown for BKR 1 FLSHOVR

Table 5–19: G60 FLEXLOGIC OPERANDS (Sheet 2 of 10)

OPERAND TYPE	OPERAND SYNTAX	OPERAND DESCRIPTION
ELEMENT Breaker failure	BKR FAIL 1 RETRIPA BKR FAIL 1 RETRIPB BKR FAIL 1 RETRIPC BKR FAIL 1 RETRIP BKR FAIL 1 T1 OP BKR FAIL 1 T2 OP BKR FAIL 1 T3 OP BKR FAIL 1 TRIP OP	Breaker failure 1 re-trip phase A (only for 1-pole schemes) Breaker failure 1 re-trip phase B (only for 1-pole schemes) Breaker failure 1 re-trip phase C (only for 1-pole schemes) Breaker failure 1 re-trip 3-phase Breaker failure 1 timer 1 is operated Breaker failure 1 timer 2 is operated Breaker failure 1 timer 3 is operated Breaker failure 1 trip is operated
	BKR FAIL 2 to 4	Same set of operands as shown for BKR FAIL 1
ELEMENT: Breaker control	BREAKER 1 OFF CMD BREAKER 1 ON CMD BREAKER 1 ΦA BAD ST BREAKER 1 ΦA INTERM BREAKER 1 ΦA CLSD BREAKER 1 ΦA OPEN BREAKER 1 ΦB BAD ST BREAKER 1 ΦB INTERM BREAKER 1 ΦB CLSD BREAKER 1 ΦB OPEN BREAKER 1 ΦC BAD ST BREAKER 1 ΦC INTERM BREAKER 1 ΦC CLSD BREAKER 1 ΦC OPEN BREAKER 1 BAD STATUS BREAKER 1 CLOSED BREAKER 1 OPEN BREAKER 1 DISCREP BREAKER 1 TROUBLE BREAKER 1 MNL CLS BREAKER 1 TRIP A BREAKER 1 TRIP B BREAKER 1 TRIP C BREAKER 1 ANY P OPEN BREAKER 1 ONE P OPEN BREAKER 1 OOS	Breaker 1 open command initiated Breaker 1 close command initiated Breaker 1 phase A bad status is detected (discrepancy between the 52/a and 52/b contacts) Breaker 1 phase A intermediate status is detected (transition from one position to another) Breaker 1 phase A is closed Breaker 1 phase A is open Breaker 1 phase B bad status is detected (discrepancy between the 52/a and 52/b contacts) Breaker 1 phase B intermediate status is detected (transition from one position to another) Breaker 1 phase B is closed Breaker 1 phase B is open Breaker 1 phase C bad status is detected (discrepancy between the 52/a and 52/b contacts) Breaker 1 phase C intermediate status is detected (transition from one position to another) Breaker 1 phase C is closed Breaker 1 phase C is open Breaker 1 bad status is detected on any pole Breaker 1 is closed Breaker 1 is open Breaker 1 has discrepancy Breaker 1 trouble alarm Breaker 1 manual close Breaker 1 trip phase A command Breaker 1 trip phase B command Breaker 1 trip phase C command At least one pole of breaker 1 is open Only one pole of breaker 1 is open Breaker 1 is out of service
	BREAKER 2 to 4	Same set of operands as shown for BREAKER 1
ELEMENT: CT fail	CT FAIL 1 PKP CT FAIL 1 OP	CT fail has picked up CT fail has dropped out
	CT FAIL 2 to 4	Same set of operands as per CT FAIL 1
ELEMENT: Digital counters	Counter 1 HI Counter 1 EQL Counter 1 LO	Digital counter 1 output is ‘more than’ comparison value Digital counter 1 output is ‘equal to’ comparison value Digital counter 1 output is ‘less than’ comparison value
	Counter 2 to 8	Same set of operands as shown for Counter 1
ELEMENT: Digital elements	Dig Element 1 PKP Dig Element 1 OP Dig Element 1 DPO	Digital Element 1 is picked up Digital Element 1 is operated Digital Element 1 is dropped out
	Dig Element 2 to 48	Same set of operands as shown for Dig Element 1
ELEMENT: Sensitive directional power	DIR POWER 1 STG1 PKP DIR POWER 1 STG2 PKP DIR POWER 1 STG1 DPO DIR POWER 1 STG2 DPO DIR POWER 1 STG1 OP DIR POWER 1 STG2 OP DIR POWER 1 PKP DIR POWER 1 DPO DIR POWER 1 OP	Stage 1 of the directional power element 1 has picked up Stage 2 of the directional power element 1 has picked up Stage 1 of the directional power element 1 has dropped out Stage 2 of the directional power element 1 has dropped out Stage 1 of the directional power element 1 has operated Stage 2 of the directional power element 1 has operated The directional power element has picked up The directional power element has dropped out The directional power element has operated
	DIR POWER 2	Same set of operands as DIR POWER 1

Table 5–19: G60 FLEXLOGIC OPERANDS (Sheet 3 of 10)

OPERAND TYPE	OPERAND SYNTAX	OPERAND DESCRIPTION
ELEMENT: Field ground fault	FIELD GND STG1 PKP	Stage 1 of the field ground protection has picked up
	FIELD GND STG1 DPO	Stage 1 of the field ground protection has dropped out
	FIELD GND STG1 OP	Stage 1 of the field ground protection has operated
	FIELD GND STG2 PKP	Stage 2 of the field ground protection has picked up
	FIELD GND STG2 DPO	Stage 2 of the field ground protection has dropped out
	FIELD GND STG2 OP	Stage 2 of the field ground protection has operated
	FIELD GND INJ UC PKP	Under current injection element of field ground module has picked up
	FIELD GND INJ UC DPO	Under current injection element of field ground module has dropped out
	FIELD GND INJ UC OP	Under current injection element of field ground module has operated
	FIELD CURRENT OC PKP	Field over current element has picked up
	FIELD CURRENT OC DPO	Field over current element has dropped out
	FIELD CURRENT OC OP	Field over current element has operated
	FIELD CURRENT UC PKP	Field under current element has picked up
	FIELD CURRENT UC DPO	Field under current element has dropped out
	FIELD CURRENT UC OP	Field under current element has operated
	GPM-F FAILURE	GPM-F module failure has been detected
ELEMENT: Frequency out-of-band accumulation	FREQ OOB BAND 1 PKP	Asserted when the frequency accumulation in band 1 is active
	FREQ OOB BAND 1 DPO	Asserted when the frequency accumulation in band 1 is inactive
	FREQ OOB BAND 1 OP	Asserted when the frequency accumulator in band 1 operates
	FREQ OOB ACCUM PKP	Asserted when the frequency accumulator in any band is active
	FREQ OOB ACCUM OP	Asserted when the frequency accumulator in any band operates
	FREQ OOB BAND 2 to 7	Same set of operands as shown for band 1
ELEMENT Frequency rate of change	FREQ RATE 1 PKP	The frequency rate of change 1 element has picked up
	FREQ RATE 1 DPO	The frequency rate of change 1 element has dropped out
	FREQ RATE 1 OP	The frequency rate of change 1 element has operated
	FREQ RATE 2 to 4	Same set of operands as shown for FREQ RATE 1
ELEMENT: FlexElements	FxE 1 PKP	FlexElement 1 has picked up
	FxE 1 OP	FlexElement 1 has operated
	FxE 1 DPO	FlexElement 1 has dropped out
	FxE 2 to 16	Same set of operands as shown for FxE 1
ELEMENT: Generator unbalance	GEN UNBAL STG1 PKP	The Generator Unbalance Stage 1 element has picked up
	GEN UNBAL STG1 DPO	The Generator Unbalance Stage 1 element has dropped out
	GEN UNBAL STG1 OP	The Generator Unbalance Stage 1 element has operated
	GEN UNBAL STG2 PKP	The Generator Unbalance Stage 2 element has picked up
	GEN UNBAL STG2 DPO	The Generator Unbalance Stage 2 element has dropped out
	GEN UNBAL STG2 OP	The Generator Unbalance Stage 2 element has operated
	GEN UNBAL PKP	The Generator Unbalance element has picked up
	GEN UNBAL DPO	The Generator Unbalance element has dropped out
	GEN UNBAL OP	The Generator Unbalance element has operated
ELEMENT: Ground instantaneous overcurrent	GROUND IOC1 PKP	Ground instantaneous overcurrent 1 has picked up
	GROUND IOC1 OP	Ground instantaneous overcurrent 1 has operated
	GROUND IOC1 DPO	Ground instantaneous overcurrent 1 has dropped out
ELEMENT: Ground time overcurrent	GROUND TOC1 PKP	Ground time overcurrent 1 has picked up
	GROUND TOC1 OP	Ground time overcurrent 1 has operated
	GROUND TOC1 DPO	Ground time overcurrent 1 has dropped out
ELEMENT Non-volatile latches	LATCH 1 ON	Non-volatile latch 1 is ON (Logic = 1)
	LATCH 1 OFF	Non-volatile latch 1 is OFF (Logic = 0)
	LATCH 2 to 16	Same set of operands as shown for LATCH 1
ELEMENT: Loss of excitation	LOSS EXCIT STG1 PKP	Stage 1 of the loss of excitation element has picked up
	LOSS EXCIT STG2 PKP	Stage 2 of the loss of excitation element has picked up
	LOSS EXCIT STG1 DPO	Stage 1 of the loss of excitation element has dropped out
	LOSS EXCIT STG2 DPO	Stage 2 of the loss of excitation element has dropped out
	LOSS EXCIT STG1 OP	Stage 1 of the loss of excitation element has operated
	LOSS EXCIT STG2 OP	Stage 2 of the loss of excitation element has operated
	LOSS EXCIT PKP	The loss of excitation element has picked up
	LOSS EXCIT DPO	The loss of excitation element has dropped out
	LOSS EXCIT OP	The loss of excitation element has operated
ELEMENT: Negative-sequence directional overcurrent	NEG SEQ DIR OC1 FWD	Negative-sequence directional overcurrent 1 forward has operated
	NEG SEQ DIR OC1 REV	Negative-sequence directional overcurrent 1 reverse has operated
	NEG SEQ DIR OC2 FWD	Negative-sequence directional overcurrent 2 forward has operated
	NEG SEQ DIR OC2 REV	Negative-sequence directional overcurrent 2 reverse has operated
ELEMENT: Negative-sequence overvoltage	NEG SEQ OV1 PKP	Negative-sequence overvoltage element has picked up
	NEG SEQ OV1 DPO	Negative-sequence overvoltage element has dropped out
	NEG SEQ OV1 OP	Negative-sequence overvoltage element has operated
	NEG SEQ OV2 to 3	Same set of operands as shown for NEG SEQ OV1

Table 5–19: G60 FLEXLOGIC OPERANDS (Sheet 4 of 10)

OPERAND TYPE	OPERAND SYNTAX	OPERAND DESCRIPTION
ELEMENT: Neutral instantaneous overcurrent	NEUTRAL IOC1 PKP NEUTRAL IOC1 OP NEUTRAL IOC1 DPO	Neutral instantaneous overcurrent 1 has picked up Neutral instantaneous overcurrent 1 has operated Neutral instantaneous overcurrent 1 has dropped out
ELEMENT: Neutral overvoltage	NEUTRAL OV1 PKP NEUTRAL OV1 DPO NEUTRAL OV1 OP	Neutral overvoltage element 1 has picked up Neutral overvoltage element 1 has dropped out Neutral overvoltage element 1 has operated
	NEUTRAL OV2 to 3	Same set of operands as shown for NEUTRAL OV1
ELEMENT: Neutral time overcurrent	NEUTRAL TOC1 PKP NEUTRAL TOC1 OP NEUTRAL TOC1 DPO	Neutral time overcurrent 1 has picked up Neutral time overcurrent 1 has operated Neutral time overcurrent 1 has dropped out
ELEMENT: Neutral directional overcurrent	NTRL DIR OC1 FWD NTRL DIR OC1 REV	Neutral directional overcurrent 1 forward has operated Neutral directional overcurrent 1 reverse has operated
	NTRL DIR OC2	Same set of operands as shown for NTRL DIR OC1
ELEMENT: Overfrequency	OVERFREQ 1 PKP OVERFREQ 1 OP OVERFREQ 1 DPO	Overfrequency 1 has picked up Overfrequency 1 has operated Overfrequency 1 has dropped out
	OVERFREQ 2 to 4	Same set of operands as shown for OVERFREQ 1
ELEMENT: Synchrophasor phasor data concentrator	PDC NETWORK CNTRL 1 PDC NETWORK CNTRL 2 ↓ PDC NETWORK CNTRL 16	Phasor data concentrator asserts control bit 1 as received via the network Phasor data concentrator asserts control bit 2 as received via the network ↓ Phasor data concentrator asserts control bit 16 as received via the network
ELEMENT: Phase directional overcurrent	PH DIR1 BLK A PH DIR1 BLK B PH DIR1 BLK C PH DIR1 BLK	Phase A directional 1 block Phase B directional 1 block Phase C directional 1 block Phase directional 1 block
ELEMENT: Phase distance	PH DIST Z1 PKP PH DIST Z1 OP PH DIST Z1 OP AB PH DIST Z1 OP BC PH DIST Z1 OP CA PH DIST Z1 PKP AB PH DIST Z1 PKP BC PH DIST Z1 PKP CA PH DIST Z1 SUPN IAB PH DIST Z1 SUPN IBC PH DIST Z1 SUPN ICA PH DIST Z1 DPO AB PH DIST Z1 DPO BC PH DIST Z1 DPO CA	Phase distance zone 1 has picked up Phase distance zone 1 has operated Phase distance zone 1 phase AB has operated Phase distance zone 1 phase BC has operated Phase distance zone 1 phase CA has operated Phase distance zone 1 phase AB has picked up Phase distance zone 1 phase BC has picked up Phase distance zone 1 phase CA has picked up Phase distance zone 1 phase AB IOC is supervising Phase distance zone 1 phase BC IOC is supervising Phase distance zone 1 phase CA IOC is supervising Phase distance zone 1 phase AB has dropped out Phase distance zone 1 phase BC has dropped out Phase distance zone 1 phase CA has dropped out
	PH DIST Z2 to 3	Same set of operands as shown for PH DIST Z1
ELEMENT: Phase instantaneous overcurrent	PHASE IOC1 PKP PHASE IOC1 OP PHASE IOC1 DPO PHASE IOC1 PKP A PHASE IOC1 PKP B PHASE IOC1 PKP C PHASE IOC1 OP A PHASE IOC1 OP B PHASE IOC1 OP C PHASE IOC1 DPO A PHASE IOC1 DPO B PHASE IOC1 DPO C	At least one phase of phase instantaneous overcurrent 1 has picked up At least one phase of phase instantaneous overcurrent 1 has operated All phases of phase instantaneous overcurrent 1 have dropped out Phase A of phase instantaneous overcurrent 1 has picked up Phase B of phase instantaneous overcurrent 1 has picked up Phase C of phase instantaneous overcurrent 1 has picked up Phase A of phase instantaneous overcurrent 1 has operated Phase B of phase instantaneous overcurrent 1 has operated Phase C of phase instantaneous overcurrent 1 has operated Phase A of phase instantaneous overcurrent 1 has dropped out Phase B of phase instantaneous overcurrent 1 has dropped out Phase C of phase instantaneous overcurrent 1 has dropped out
	PHASE IOC2	Same set of operands as shown for PHASE IOC1
ELEMENT: Phase overvoltage	PHASE OV1 PKP PHASE OV1 OP PHASE OV1 DPO PHASE OV1 PKP A PHASE OV1 PKP B PHASE OV1 PKP C PHASE OV1 OP A PHASE OV1 OP B PHASE OV1 OP C PHASE OV1 DPO A PHASE OV1 DPO B PHASE OV1 DPO C	At least one phase of overvoltage 1 has picked up At least one phase of overvoltage 1 has operated All phases of overvoltage 1 have dropped out Phase A of overvoltage 1 has picked up Phase B of overvoltage 1 has picked up Phase C of overvoltage 1 has picked up Phase A of overvoltage 1 has operated Phase B of overvoltage 1 has operated Phase C of overvoltage 1 has operated Phase A of overvoltage 1 has dropped out Phase B of overvoltage 1 has dropped out Phase C of overvoltage 1 has dropped out
	PHASE OV2 to 3	Same set of operands as shown for PHASE OV1

Table 5–19: G60 FLEXLOGIC OPERANDS (Sheet 5 of 10)

OPERAND TYPE	OPERAND SYNTAX	OPERAND DESCRIPTION
ELEMENT: Phase time overcurrent	PHASE TOC1 PKP	At least one phase of phase time overcurrent 1 has picked up
	PHASE TOC1 OP	At least one phase of phase time overcurrent 1 has operated
	PHASE TOC1 DPO	All phases of phase time overcurrent 1 have dropped out
	PHASE TOC1 PKP A	Phase A of phase time overcurrent 1 has picked up
	PHASE TOC1 PKP B	Phase B of phase time overcurrent 1 has picked up
	PHASE TOC1 PKP C	Phase C of phase time overcurrent 1 has picked up
	PHASE TOC1 OP A	Phase A of phase time overcurrent 1 has operated
	PHASE TOC1 OP B	Phase B of phase time overcurrent 1 has operated
	PHASE TOC1 OP C	Phase C of phase time overcurrent 1 has operated
	PHASE TOC1 DPO A	Phase A of phase time overcurrent 1 has dropped out
	PHASE TOC1 DPO B	Phase B of phase time overcurrent 1 has dropped out
	PHASE TOC1 DPO C	Phase C of phase time overcurrent 1 has dropped out
ELEMENT: Phase undervoltage	PHASE UV1 PKP	At least one phase of phase undervoltage 1 has picked up
	PHASE UV1 OP	At least one phase of phase undervoltage 1 has operated
	PHASE UV1 DPO	All phases of phase undervoltage 1 have dropped out
	PHASE UV1 PKP A	Phase A of phase undervoltage 1 has picked up
	PHASE UV1 PKP B	Phase B of phase undervoltage 1 has picked up
	PHASE UV1 PKP C	Phase C of phase undervoltage 1 has picked up
	PHASE UV1 OP A	Phase A of phase undervoltage 1 has operated
	PHASE UV1 OP B	Phase B of phase undervoltage 1 has operated
	PHASE UV1 OP C	Phase C of phase undervoltage 1 has operated
	PHASE UV1 DPO A	Phase A of phase undervoltage 1 has dropped out
	PHASE UV1 DPO B	Phase B of phase undervoltage 1 has dropped out
	PHASE UV1 DPO C	Phase C of phase undervoltage 1 has dropped out
	PHASE UV2 to 3	Same set of operands as shown for PHASE UV1
ELEMENT: Synchrophasor phasor measurement unit (PMU)	PMU Agg 1 SvEng On	SvEng data item in associated control block is on
	PMU 1 CURR TRIGGER	Overcurrent trigger of phasor measurement unit 1 has operated
	PMU 1 FREQ TRIGGER	Abnormal frequency trigger of phasor measurement unit 1 has operated
	PMU 1 POWER TRIGGER	Overpower trigger of phasor measurement unit 1 has operated
	PMU 1 ROCOF TRIGGER	Rate of change of frequency trigger of phasor measurement unit 1 has operated
	PMU 1 VOLT TRIGGER	Abnormal voltage trigger of phasor measurement unit 1 has operated
	PMU 1 TRIGGERED	Phasor measurement unit 1 triggered; no events or targets are generated by this operand
ELEMENT: Synchrophasor one-shot	PMU ONE-SHOT EXPIRED	Indicates the one-shot operation has been executed, and the present time is at least 30 seconds past the scheduled one-shot time
	PMU ONE-SHOT OP	Indicates the one-shot operation and remains asserted for 30 seconds afterwards
	PMU ONE-SHOT PENDING	Indicates the one-shot operation is pending; that is, the present time is before the scheduled one-shot time
ELEMENT: Power swing detect	POWER SWING OUTER	Positive-sequence impedance in outer characteristic
	POWER SWING MIDDLE	Positive-sequence impedance in middle characteristic
	POWER SWING INNER	Positive-sequence impedance in inner characteristic
	POWER SWING BLOCK	Power swing blocking element operated
	POWER SWING TMR2 PKP	Power swing timer 2 picked up
	POWER SWING TMR3 PKP	Power swing timer 3 picked up
	POWER SWING TMR4 PKP	Power swing timer 4 picked up
	POWER SWING TRIP	Out-of-step tripping operated
	POWER SWING 50DD	The power swing element detected a disturbance other than power swing
	POWER SWING INCOMING	An unstable power swing has been detected (incoming locus)
	POWER SWING OUTGOING	An unstable power swing has been detected (outgoing locus)
	POWER SWING UN/BLOCK	Asserted when power swing is detected and de-asserted when a fault during power swing occurs
ELEMENT: Restricted ground fault	RESTD GND FT1 PKP	Restricted ground fault 1 has picked up
	RESTD GND FT1 OP	Restricted ground fault 1 has operated
	RESTD GND FT1 DPO	Restricted ground fault 1 has dropped out
	RESTD GND FT2 to 6	Same set of operands as shown for RESTD GND FT1
ELEMENT: Remote RTD protection	RRTD COMM FAIL	Asserted when RRTD loss of communications is detected
	RRTD RTD 1 ALARM DPO	Asserted when the RRTD RTD 1 alarm stage drops out
	RRTD RTD 1 ALARM OP	Asserted when the RRTD RTD 1 alarm stage operates
	RRTD RTD 1 ALARM PKP	Asserted when the RRTD RTD 1 alarm stage picks up
	RRTD RTD 1 OPEN	Asserted when the RRTD RTD 1 detects an open circuit
	RRTD RTD 1 SHORTED	Asserted when the RRTD RTD 1 detects an short/low circuit
	RRTD RTD 1 TRIP DPO	Asserted when the RRTD RTD 1 trip stage drops out
	RRTD RTD 1 TRIP OP	Asserted when the RRTD RTD 1 trip stage operates
	RRTD RTD 1 TRIP PKP	Asserted when the RRTD RTD 1 trip stage picks up
	RRTD RTD 2 to 12	Same set of operands as shown

Table 5–19: G60 FLEXLOGIC OPERANDS (Sheet 6 of 10)

OPERAND TYPE	OPERAND SYNTAX	OPERAND DESCRIPTION
ELEMENT: RTD protection	RTD Ip 1 ALARM DPO	Asserted when the alarm stage of RTD input 1 protection picks up
	RTD Ip 1 ALARM OP	Asserted when the alarm stage of RTD input 1 protection operates
	RTD Ip 1 ALARM PKP	Asserted when the alarm stage of RTD input 1 protection drops out
	RTD Ip 1 OPEN	Asserted when RTD input 1 detects an open circuit
	RTD Ip 1 SHORTED	Asserted when RTD input 1 detects a shorted or low circuit
	RTD Ip 1 TRIP DPO	Asserted when the trip stage of RTD input 1 protection picks up
	RTD Ip 1 TRIP OP	Asserted when the trip stage of RTD input 1 protection operates
	RTD Ip 1 TRIP PKP	Asserted when the trip stage of RTD input 1 protection drops out
	RTD Ip 2...	The set of operands shown above are available for the RTD Ip 2 and higher elements
ELEMENT: Selector switch	SELECTOR 1 POS Y	Selector switch 1 is in Position Y (mutually exclusive operands)
	SELECTOR 1 BIT 0	First bit of the 3-bit word encoding position of selector 1
	SELECTOR 1 BIT 1	Second bit of the 3-bit word encoding position of selector 1
	SELECTOR 1 BIT 2	Third bit of the 3-bit word encoding position of selector 1
	SELECTOR 1 STP ALARM	Position of selector 1 has been pre-selected with the stepping up control input but not acknowledged
	SELECTOR 1 BIT ALARM	Position of selector 1 has been pre-selected with the 3-bit control input but not acknowledged
	SELECTOR 1 ALARM	Position of selector 1 has been pre-selected but not acknowledged
	SELECTOR 1 PWR ALARM	Position of selector switch 1 is undetermined or restored from memory when the relay powers up and synchronizes to the three-bit input
	SELECTOR 2	Same set of operands as shown above for SELECTOR 1
ELEMENT: Setting group	SETTING GROUP ACT 1	Setting group 1 is active
	SETTING GROUP ACT 2	Setting group 2 is active
	SETTING GROUP ACT 3	Setting group 3 is active
	SETTING GROUP ACT 4	Setting group 4 is active
	SETTING GROUP ACT 5	Setting group 5 is active
	SETTING GROUP ACT 6	Setting group 6 is active
ELEMENT: Sub-harmonic stator ground fault detector	SH STAT GND STG1 PKP	Stage 1 of the sub-harmonic stator ground protection has picked up
	SH STAT GND STG1 DPO	Stage 1 of the sub-harmonic stator ground protection has dropped out
	SH STAT GND STG1 OP	Stage 1 of the sub-harmonic stator ground protection has operated
	SH STAT GND STG2 PKP	Stage 2 of the sub-harmonic stator ground protection has picked up
	SH STAT GND STG2 DPO	Stage 2 of the sub-harmonic stator ground protection has dropped out
	SH STAT GND STG2 OP	Stage 2 of the sub-harmonic stator ground protection has operated
	SH STAT GND OC PKP	Ground over current element of the sub-harmonic stator ground protection has picked up
	SH STAT GND OC DPO	Ground over current element of the sub-harmonic stator ground protection has dropped out
	SH STAT GND OC OP	Ground over current element of the sub-harmonic stator ground protection has operated
	SH STAT GND TRB OP	Sub-harmonic stator ground module trouble has operated
ELEMENT: Split phase protection	SPLIT PHASE A PKP	Phase A of the split phase protection has picked up
	SPLIT PHASE A DPO	Phase A of the split phase protection has dropped out
	SPLIT PHASE A OP	Phase A of the split phase protection has operated
	SPLIT PHASE B PKP	Phase B of the split phase protection has picked up
	SPLIT PHASE B DPO	Phase B of the split phase protection has dropped out
	SPLIT PHASE B OP	Phase B of the split phase protection has operated
	SPLIT PHASE C PKP	Phase C of the split phase protection has picked up
	SPLIT PHASE C DPO	Phase C of the split phase protection has dropped out
	SPLIT PHASE C OP	Phase C of the split phase protection has operated
	SPLIT PHASE OP	The split phase protection has operated
	SPLIT PHASE PKP	The split phase protection has picked up
	SPLIT PHASE DPO	The split phase protection has dropped out
ELEMENT: Disturbance detector	SRC1 50DD OP	Source 1 disturbance detector has operated
	SRC2 50DD OP	Source 2 disturbance detector has operated
	SRC3 50DD OP	Source 3 disturbance detector has operated
	SRC4 50DD OP	Source 4 disturbance detector has operated
ELEMENT: VTFF (Voltage transformer fuse failure)	SRC1 VT FF OP	Source 1 VT fuse failure detector has operated
	SRC1 VT FF DPO	Source 1 VT fuse failure detector has dropped out
	SRC1 VT FF VOL LOSS	Source 1 has lost voltage signals (V2 below 10% and V1 below 5% of nominal)
	SRC1 VT NEU WIRE OPEN	Source 1 VT neutral wire open detected.When the VT is connected in Delta, this function should not be enabled because there is no neutral wire for Delta connected VT.
	SRC2 VT FUSE FAIL to SRC4	Same set of operands as shown for SRC1 VT FUSE FAIL

Table 5–19: G60 FLEXLOGIC OPERANDS (Sheet 7 of 10)

OPERAND TYPE	OPERAND SYNTAX	OPERAND DESCRIPTION
ELEMENT: Stator differential	STATOR DIFF OP	At least one phase of stator differential has operated
	STATOR DIFF PKP A	Phase A of stator differential has picked up
	STATOR DIFF PKP B	Phase B of stator differential has picked up
	STATOR DIFF PKP C	Phase C of stator differential has picked up
	STATOR DIFF OP A	Phase A of stator differential has operated
	STATOR DIFF OP B	Phase B of stator differential has operated
	STATOR DIFF OP C	Phase C of stator differential has operated
	STATOR DIFF DPO A	Phase A of stator differential has dropped out
	STATOR DIFF DPO B	Phase B of stator differential has dropped out
	STATOR DIFF DPO C	Phase C of stator differential has dropped out
	STATOR DIFF SAT A	Phase A of stator differential has is saturated
	STATOR DIFF SAT B	Phase B of stator differential has is saturated
	STATOR DIFF SAT C	Phase C of stator differential has is saturated
	STATOR DIFF DIR A	Phase A of stator differential phase comparison has been satisfied
	STATOR DIFF DIR B	Phase B of stator differential phase comparison has been satisfied
	STATOR DIFF DIR C	Phase C of stator differential phase comparison has been satisfied
ELEMENT: Disconnect switch	SWITCH 1 OFF CMD	Disconnect switch 1 open command initiated
	SWITCH 1 ON CMD	Disconnect switch 1 close command initiated
	SWITCH 1 CLOSED	Disconnect switch 1 is closed
	SWITCH 1 OPEN	Disconnect switch 1 is open
	SWITCH 1 DISCREP	Disconnect switch 1 has discrepancy
	SWITCH 1 TROUBLE	Disconnect switch 1 trouble alarm
	SWITCH 1 ΦA CLSD	Disconnect switch 1 phase A is closed
	SWITCH 1 ΦA OPEN	Disconnect switch 1 phase A is open
	SWITCH 1 ΦA BAD ST	Disconnect switch 1 phase A bad status is detected (discrepancy between the 89/a and 89/b contacts)
	SWITCH 1 ΦA INTERM	Disconnect switch 1 phase A intermediate status is detected (transition from one position to another)
	SWITCH 1 ΦB CLSD	Disconnect switch 1 phase B is closed
	SWITCH 1 ΦB OPEN	Disconnect switch 1 phase B is open
	SWITCH 1 ΦB BAD ST	Disconnect switch 1 phase B bad status is detected (discrepancy between the 89/a and 89/b contacts)
	SWITCH 1 ΦB INTERM	Disconnect switch 1 phase B intermediate status is detected (transition from one position to another)
	SWITCH 1 ΦC CLSD	Disconnect switch 1 phase C is closed
	SWITCH 1 ΦC OPEN	Disconnect switch 1 phase C is open
	SWITCH 1 ΦC BAD ST	Disconnect switch 1 phase C bad status is detected (discrepancy between the 89/a and 89/b contacts)
	SWITCH 1 ΦC INTERM	Disconnect switch 1 phase C intermediate status is detected (transition from one position to another)
	SWITCH 1 BAD STATUS	Disconnect switch 1 bad status is detected on any pole
	SWITCH 2 to 16	Same set of operands as shown for SWITCH 1
ELEMENT: Synchrocheck	SYNC1 DEAD S OP	Synchrocheck 1 dead source has operated
	SYNC1 DEAD S DPO	Synchrocheck 1 dead source has dropped out
	SYNC1 SYNC OP	Synchrocheck 1 in synchronization has operated
	SYNC1 SYNC DPO	Synchrocheck 1 in synchronization has dropped out
	SYNC1 CLS OP	Synchrocheck 1 close has operated
	SYNC1 CLS DPO	Synchrocheck 1 close has dropped out
	SYNC1 V1 ABOVE MIN	Synchrocheck 1 V1 is above the minimum live voltage
	SYNC1 V1 BELOW MAX	Synchrocheck 1 V1 is below the maximum dead voltage
	SYNC1 V2 ABOVE MIN	Synchrocheck 1 V2 is above the minimum live voltage
	SYNC1 V2 BELOW MAX	Synchrocheck 1 V2 is below the maximum dead voltage
	SYNC 2 to 4	Same set of operands as shown for SYNC 1
ELEMENT: Teleprotection channel tests	TELEPRO CH1 FAIL	Channel 1 failed
	TELEPRO CH2 FAIL	Channel 2 failed
	TELEPRO CH1 ID FAIL	The ID check for a peer relay on channel 1 has failed
	TELEPRO CH2 ID FAIL	The ID check for a peer relay on channel 2 has failed
	TELEPRO CH1 CRC FAIL	CRC detected packet corruption on channel 1
	TELEPRO CH2 CRC FAIL	CRC detected packet corruption on channel 2
	TELEPRO CH1 PKT LOST	CRC detected lost packet on channel 1
	TELEPRO CH2 PKT LOST	CRC detected lost packet on channel 2
ELEMENT: Teleprotection inputs/outputs	TELEPRO INPUT 1-1 On ↓ TELEPRO INPUT 1-16 On	Flag is set, Logic =1 ↓ Flag is set, Logic =1
	TELEPRO INPUT 2-1 On ↓ TELEPRO INPUT 2-16 On	Flag is set, Logic =1 ↓ Flag is set, Logic =1
ELEMENT: Thermal overload protection	THERMAL PROT 1 PKP	Thermal overload protection 1 picked up
	THERMAL PROT 1 OP	Thermal overload protection 1 operated
	THERMAL PROT 2	Same set of operands as shown for THERMAL PROT 1

Table 5–19: G60 FLEXLOGIC OPERANDS (Sheet 8 of 10)

OPERAND TYPE	OPERAND SYNTAX	OPERAND DESCRIPTION
ELEMENT Trip bus	TRIP BUS 1 PKP TRIP BUS 1 OP	Asserted when the trip bus 1 element picks up Asserted when the trip bus 1 element operates
	TRIP BUS 2 to 6	Same set of operands as shown for TRIP BUS 1
ELEMENT: Underfrequency	UNDERFREQ 1 PKP UNDERFREQ 1 OP UNDERFREQ 1 DPO	Underfrequency 1 has picked up Underfrequency 1 has operated Underfrequency 1 has dropped out
	UNDERFREQ 2 to 6	Same set of operands as shown for UNDERFREQ 1
ELEMENT: Volts per hertz	VOLT PER HERTZ 1 PKP VOLT PER HERTZ 1 OP VOLT PER HERTZ 1 DPO	The volts per hertz element 1 has picked up The volts per hertz element 1 has operated The volts per hertz element 1 has dropped out
	VOLT PER HERTZ 2	Same set of operands as VOLT PER HERTZ 1
FIXED OPERANDS	Off	Logic = 0. Does nothing and may be used as a delimiter in an equation list; used as 'Disable' by other features.
	On	Logic = 1. Can be used as a test setting.
INPUTS/OUTPUTS: Contact inputs	Cont Ip 1 On Cont Ip 2 On ↓ Cont Ip 1 Off Cont Ip 2 Off ↓ Cont Ip 96 On Cont Ip 96 Off	(will not appear unless ordered) (will not appear unless ordered) ↓ (will not appear unless ordered) (will not appear unless ordered) ↓ (will not appear unless ordered) (will not appear unless ordered)
INPUTS/OUTPUTS: Contact outputs	Cont Op 1 Closed Cont Op 1 IOn Cont Op 1 VOn Cont Op 1 VOff	Contact output is closed Current is flowing through the contact Voltage exists across the contact (present for contact outputs equipped with monitoring) Voltage exists across the contact (present for contact outputs equipped with monitoring)
	Cont Op 2 to 64	Same set of operands as shown for Cont Op 1
INPUTS/OUTPUTS Direct inputs	DIRECT INPUT 1 On ↓ DIRECT INPUT 32 On	Flag is set, logic=1 ↓ Flag is set, logic=1
INPUTS/OUTPUTS: Remote double-point status inputs	RemDPS Ip 1 BAD RemDPS Ip 1 INTERM RemDPS Ip 1 OFF RemDPS Ip 1 ON	Asserted while the remote double-point status input is in the bad state Asserted while the remote double-point status input is in the intermediate state Asserted while the remote double-point status input is off Asserted while the remote double-point status input is on
	REMDPS Ip 2 to 5	Same set of operands as per REMDPS 1
INPUTS/OUTPUTS: Remote inputs	REMOTE INPUT 1 On REMOTE INPUT 2 On REMOTE INPUT 3 On ↓ REMOTE INPUT 32 On	Flag is set, logic=1 Flag is set, logic=1 Flag is set, logic=1 ↓ Flag is set, logic=1
INPUTS/OUTPUTS: Virtual inputs	Virt Ip 1 On Virt Ip 2 On Virt Ip 3 On ↓ Virt Ip 64 On	Flag is set, logic=1 Flag is set, logic=1 Flag is set, logic=1 ↓ Flag is set, logic=1
INPUTS/OUTPUTS: Virtual outputs	Virt Op 1 On Virt Op 2 On Virt Op 3 On ↓ Virt Op 96 On	Flag is set, logic=1 Flag is set, logic=1 Flag is set, logic=1 ↓ Flag is set, logic=1

Table 5–19: G60 FLEXLOGIC OPERANDS (Sheet 9 of 10)

OPERAND TYPE	OPERAND SYNTAX	OPERAND DESCRIPTION
LED INDICATORS: Fixed front panel LEDs	LED IN SERVICE	Asserted when the front panel IN SERVICE LED is on
	LED TROUBLE	Asserted when the front panel TROUBLE LED is on
	LED TEST MODE	Asserted when the front panel TEST MODE LED is on
	LED TRIP	Asserted when the front panel TRIP LED is on
	LED ALARM	Asserted when the front panel ALARM LED is on
	LED PICKUP	Asserted when the front panel PICKUP LED is on
	LED VOLTAGE	Asserted when the front panel VOLTAGE LED is on
	LED CURRENT	Asserted when the front panel CURRENT LED is on
	LED FREQUENCY	Asserted when the front panel FREQUENCY LED is on
	LED OTHER	Asserted when the front panel OTHER LED is on
	LED PHASE A	Asserted when the front panel PHASE A LED is on
	LED PHASE B	Asserted when the front panel PHASE B LED is on
	LED PHASE C	Asserted when the front panel PHASE C LED is on
	LED NEUTRAL/GROUND	Asserted when the front panel NEUTRAL/GROUND LED is on
LED INDICATORS: LED test	LED TEST IN PROGRESS	An LED test has been initiated and has not finished
LED INDICATORS: User-programmable LEDs	LED USER 1	Asserted when user-programmable LED 1 is on
	LED USER 2 to 48	The operand above is available for user-programmable LEDs 2 through 48
PASSWORD SECURITY	ACCESS LOC SETG OFF	Asserted when local setting access is disabled
	ACCESS LOC SETG ON	Asserted when local setting access is enabled
	ACCESS LOC CMND OFF	Asserted when local command access is disabled
	ACCESS LOC CMND ON	Asserted when local command access is enabled
	ACCESS REM SETG OFF	Asserted when remote setting access is disabled
	ACCESS REM SETG ON	Asserted when remote setting access is enabled
	ACCESS REM CMND OFF	Asserted when remote command access is disabled
	ACCESS REM CMND ON	Asserted when remote command access is enabled
	UNAUTHORIZED ACCESS	Asserted when a password entry fails while accessing a password protected level of the G60
REMOTE DEVICES	REMOTE DEVICE 1 On REMOTE DEVICE 2 On REMOTE DEVICE 3 On ↓ REMOTE DEVICE 16 On	Flag is set, logic=1 Flag is set, logic=1 Flag is set, logic=1 ↓ Flag is set, logic=1
	REMOTE DEVICE 1 Off REMOTE DEVICE 2 Off REMOTE DEVICE 3 Off ↓ REMOTE DEVICE 16 Off	Flag is set, logic=1 Flag is set, logic=1 Flag is set, logic=1 ↓ Flag is set, logic=1
RESETTING	RESET OP	Reset command is operated (set by all three operands below)
	RESET OP (COMMS)	Communications source of the reset command
	RESET OP (OPERAND)	Operand (assigned in the **INPUTS/OUTPUTS ⇨⇩ RESETTING** menu) source of the reset command
	RESET OP (PUSHBUTTON)	Reset key (pushbutton) source of the reset command
SELF-DIAGNOSTICS (See *Relay Self-tests* descriptions in *Chapter 7: Commands and Targets)*	ANY MAJOR ERROR	Any of the major self-test errors generated (major error)
	ANY MINOR ERROR	Any of the minor self-test errors generated (minor error)
	ANY SELF-TESTS	Any self-test errors generated (generic, any error)
	BATTERY FAIL	The battery is not functioning. Return power supply module to manufacturer.
	CLOCK UNSYNCHRONIZED	Relay is not synchronized to the international time standard
	DIRECT DEVICE OFF	A direct device is configured but not connected
	DIRECT RING BREAK	The Direct I/O settings is for a connection that is not in a ring
	EQUIPMENT MISMATCH	The configuration of modules does not match the stored order code
	FLEXLOGIC ERR TOKEN	A FlexLogic equation is incorrect
	IRIG-B FAILURE	"Bad IRIG-B Signal" self-test. See Chapter 7: Commands and Targets.
	LATCHING OUT ERROR	A difference is detected between the desired and actual latch contact state
	MAINTENANCE ALERT	A subset of the minor self-test errors generated, see Chapter 7
	FIRST ETHERNET FAIL	Link failure detected. See description in Chapter 7: Commands and Targets.
	PROCESS BUS FAILURE	See description in Chapter 7: Commands and Targets
	PTP FAILURE	"Bad PTP Signal" self-test as described in Chapter 7
	REMOTE DEVICE OFF	One or more GOOSE devices are not responding
	RRTD COMM FAIL	See description in Chapter 7: Commands and Targets
	SECOND ETHERNET FAIL	See description in Chapter 7: Commands and Targets
	THIRD ETHERNET FAIL	See description in Chapter 7: Commands and Targets
	SNTP FAILURE	SNTP server is not responding
	SYSTEM EXCEPTION	See description in Chapter 7: Commands and Targets
	TEMP MONITOR	Monitors ambient temperature and maximum operating temperature
	UNIT NOT PROGRAMMED	The **Settings > Product Setup > Installation > Relay Settings** setting is not programmed
TEMPERATURE MONITOR	TEMP MONITOR	Asserted while the ambient temperature is greater than the maximum operating temperature (80°C)

Table 5–19: G60 FLEXLOGIC OPERANDS (Sheet 10 of 10)

OPERAND TYPE	OPERAND SYNTAX	OPERAND DESCRIPTION
USER-PROGRAMMABLE PUSHBUTTONS	PUSHBUTTON 1 ON PUSHBUTTON 1 OFF ANY PB ON	Pushbutton number 1 is in the “On” position Pushbutton number 1 is in the “Off” position Any of twelve pushbuttons is in the “On” position
	PUSHBUTTON 2 to 6, 12, or 16 depending on front panel	Same set of operands as PUSHBUTTON 1

Some operands can be re-named by the user. These are the names of the breakers in the breaker control feature, the ID (identification) of contact inputs and outputs, the ID of virtual inputs, and the ID of virtual outputs. If the user changes the default name or ID of any of these operands, the assigned name will appear in the relay list of operands. The default names are shown in the FlexLogic operands table above.

The characteristics of the logic gates are tabulated below, and the operators available in FlexLogic are listed in the FlexLogic operators table.

Table 5–20: FLEXLOGIC GATE CHARACTERISTICS

GATES	NUMBER OF INPUTS	OUTPUT IS ‘1’ (= ON) IF...
NOT	1	input is ‘0’
OR	2 to 16	any input is ‘1’
AND	2 to 16	all inputs are ‘1’
NOR	2 to 16	all inputs are ‘0’
NAND	2 to 16	any input is ‘0’
XOR	2	only one input is ‘1’

Table 5–21: FLEXLOGIC OPERATORS

TYPE	SYNTAX	DESCRIPTION	NOTES
Editor	INSERT	Insert a parameter in an equation list.	
	DELETE	Delete a parameter from an equation list.	
End	END	The first END encountered signifies the last entry in the list of processed FlexLogic parameters.	
One-shot	POSITIVE ONE SHOT	One shot that responds to a positive going edge.	A 'one shot' refers to a single input gate that generates a pulse in response to an edge on the input. The output from a 'one shot' is True (positive) for only one pass through the FlexLogic equation. There is a maximum of 64 'one shots'.
	NEGATIVE ONE SHOT	One shot that responds to a negative going edge.	
	DUAL ONE SHOT	One shot that responds to both the positive and negative going edges.	
Logic gate	NOT	Logical NOT	Operates on the previous parameter.
	OR(2) ↓ OR(16)	2 input OR gate ↓ 16 input OR gate	Operates on the 2 previous parameters. ↓ Operates on the 16 previous parameters.
	AND(2) ↓ AND(16)	2 input AND gate ↓ 16 input AND gate	Operates on the 2 previous parameters. ↓ Operates on the 16 previous parameters.
	NOR(2) ↓ NOR(16)	2 input NOR gate ↓ 16 input NOR gate	Operates on the 2 previous parameters. ↓ Operates on the 16 previous parameters.
	NAND(2) ↓ NAND(16)	2 input NAND gate ↓ 16 input NAND gate	Operates on the 2 previous parameters. ↓ Operates on the 16 previous parameters.
	XOR(2)	2 input Exclusive OR gate	Operates on the 2 previous parameters.
	LATCH (S,R)	Latch (set, reset): reset-dominant	The parameter preceding LATCH(S,R) is the reset input. The parameter preceding the reset input is the set input.
Timer	TIMER 1 ↓ TIMER 32	Timer set with FlexLogic timer 1 settings. ↓ Timer set with FlexLogic timer 32 settings.	The timer is started by the preceding parameter. The output of the timer is TIMER #.
Assign virtual output	= Virt Op 1 ↓ = Virt Op 96	Assigns previous FlexLogic operand to virtual output 1. ↓ Assigns previous FlexLogic operand to virtual output 96.	The virtual output is set by the preceding parameter

5.5.2 FLEXLOGIC RULES

When forming a FlexLogic equation, the sequence in the linear array of parameters must follow these general rules:

1. Operands must precede the operator which uses the operands as inputs.
2. Operators have only one output. The output of an operator must be used to create a virtual output if it is to be used as an input to two or more operators.
3. Assigning the output of an operator to a virtual output terminates the equation.
4. A timer operator (for example, "TIMER 1") or virtual output assignment (for example, " = Virt Op 1") may only be used once. If this rule is broken, a syntax error will be declared.

5.5.3 FLEXLOGIC EVALUATION

Each equation is evaluated in the ascending order in which the parameters have been entered.

NOTE

FlexLogic provides built-in latches that by definition have a memory action, remaining in the set state after the set input has been asserted. These built-in latches are reset dominant, meaning that if logical "1" is applied to both set and reset entries simultaneously, then the output of the latch is logical "0." However, they are volatile, meaning that they reset upon removal of control power.

When making changes to FlexLogic entries in the settings, all FlexLogic equations are re-compiled whenever any new FlexLogic entry value is entered, and as a result of the re-compile all latches are reset automatically.

5.5.4 FLEXLOGIC EXAMPLE

This section provides an example of implementing logic for a typical application. The sequence of the steps is quite important as it should minimize the work necessary to develop the relay settings. Note that the example presented in the figure below is intended to demonstrate the procedure, not to solve a specific application situation.

In the example below, it is assumed that logic has already been programmed to produce virtual outputs 1 and 2, and is only a part of the full set of equations used. When using FlexLogic, it is important to make a note of each virtual output used – a virtual output designation (1 to 96) can only be properly assigned once.

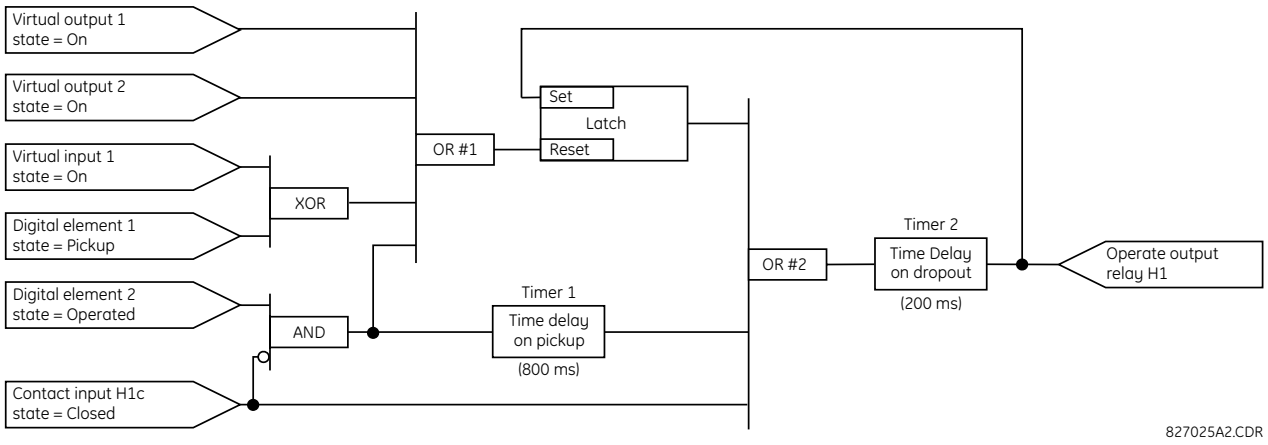

Figure 5–54: EXAMPLE LOGIC SCHEME

1. Inspect the example logic diagram to determine if the required logic can be implemented with the FlexLogic operators. If this is not possible, the logic must be altered until this condition is satisfied. Once this is done, count the inputs to each gate to verify that the number of inputs does not exceed the FlexLogic limits, which is unlikely but possible. If the number of inputs is too high, subdivide the inputs into multiple gates to produce an equivalent. For example, if 25 inputs to an AND gate are required, connect Inputs 1 through 16 to AND(16), 17 through 25 to AND(9), and the outputs from these two gates to AND(2).

   Inspect each operator between the initial operands and final virtual outputs to determine if the output from the operator is used as an input to more than one following operator. If so, the operator output must be assigned as a virtual output.

   For the example shown above, the output of the AND gate is used as an input to both OR#1 and Timer 1, and must therefore be made a virtual output and assigned the next available number (i.e. Virtual Output 3). The final output must also be assigned to a virtual output as virtual output 4, which will be programmed in the contact output section to operate relay H1 (that is, contact output H1).

   Therefore, the required logic can be implemented with two FlexLogic equations with outputs of virtual output 3 and virtual output 4 as shown below.

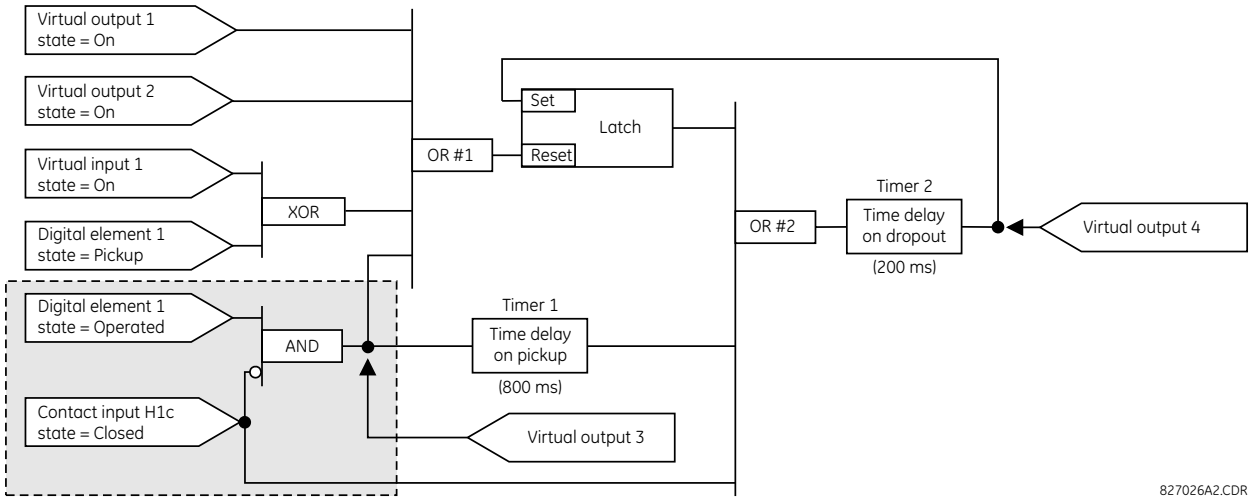

Figure 5–55: LOGIC EXAMPLE WITH VIRTUAL OUTPUTS

2. Prepare a logic diagram for the equation to produce virtual output 3, as this output will be used as an operand in the virtual output 4 equation (create the equation for every output that will be used as an operand first, so that when these operands are required they will already have been evaluated and assigned to a specific virtual output). The logic for virtual output 3 is shown below with the final output assigned.

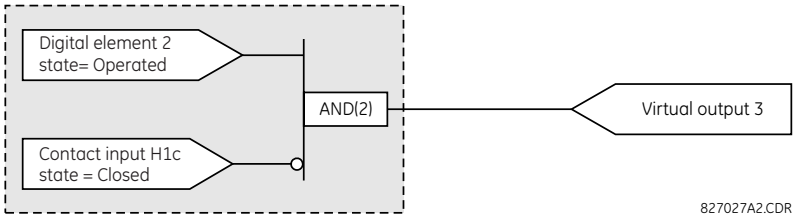

Figure 5–56: LOGIC FOR VIRTUAL OUTPUT 3

3. Prepare a logic diagram for virtual output 4, replacing the logic ahead of virtual output 3 with a symbol identified as virtual output 3, as shown below.

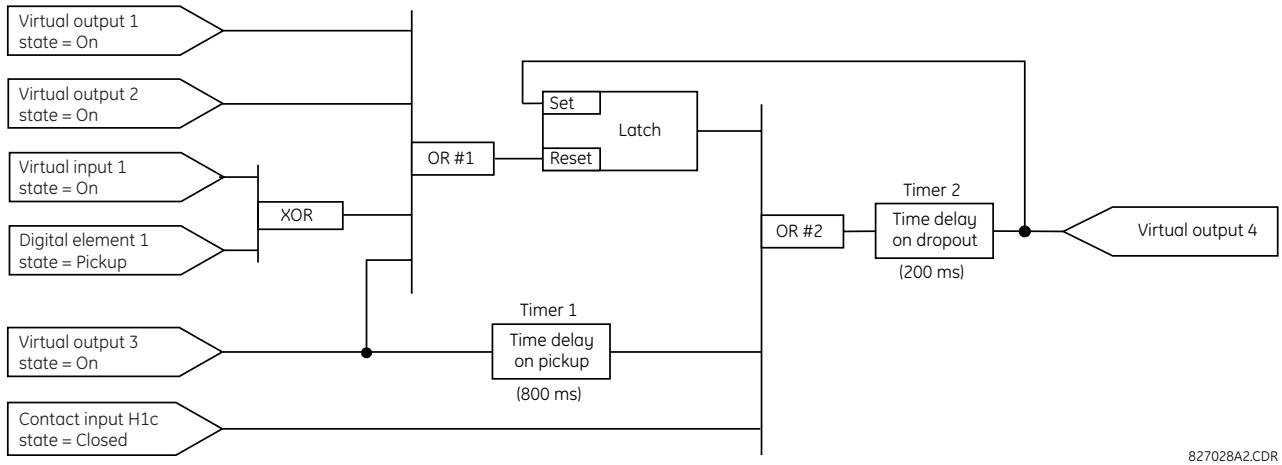

Figure 5–57: LOGIC FOR VIRTUAL OUTPUT 4

4. Program the FlexLogic equation for virtual output 3 by translating the logic into available FlexLogic parameters. The equation is formed one parameter at a time until the required logic is complete. It is generally easier to start at the out-

put end of the equation and work back towards the input, as shown in the following steps. It is also recommended to list operator inputs from bottom to top. For demonstration, the final output will be arbitrarily identified as parameter 99, and each preceding parameter decremented by one in turn. Until accustomed to using FlexLogic, it is suggested that a worksheet with a series of cells marked with the arbitrary parameter numbers be prepared, as shown below.

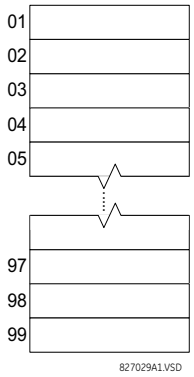

Figure 5–58: FLEXLOGIC WORKSHEET

5. Following the procedure outlined, start with parameter 99, as follows:

   99: The final output of the equation is virtual output 3, which is created by the operator "= Virt Op n". This parameter is therefore "= Virt Op 3."

   98: The gate preceding the output is an AND, which in this case requires two inputs. The operator for this gate is a 2-input AND so the parameter is “AND(2)”. Note that FlexLogic rules require that the number of inputs to most types of operators must be specified to identify the operands for the gate. As the 2-input AND will operate on the two operands preceding it, these inputs must be specified, starting with the lower.

   97: This lower input to the AND gate must be passed through an inverter (the NOT operator) so the next parameter is “NOT”. The NOT operator acts upon the operand immediately preceding it, so specify the inverter input next.

   96: The input to the NOT gate is to be contact input H1c. The ON state of a contact input can be programmed to be set when the contact is either open or closed. Assume for this example the state is to be ON for a closed contact. The operand is therefore “Cont Ip H1c On”.

   95: The last step in the procedure is to specify the upper input to the AND gate, the operated state of digital element 2. This operand is "DIG ELEM 2 OP".

   Writing the parameters in numerical order can now form the equation for virtual output 3:

```
[95] DIG ELEM 2 OP
[96] Cont Ip H1c On
[97] NOT
[98] AND(2)
[99] = Virt Op 3
```

It is now possible to check that this selection of parameters will produce the required logic by converting the set of parameters into a logic diagram. The result of this process is shown below, which is compared to the logic for virtual output 3 diagram as a check.

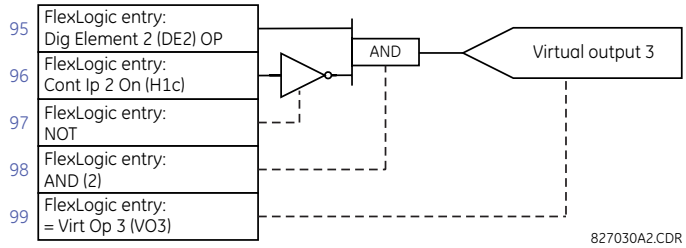

Figure 5–59: FLEXLOGIC EQUATION FOR VIRTUAL OUTPUT 3

6. Repeating the process described for virtual output 3, select the FlexLogic parameters for Virtual Output 4.

   99: The final output of the equation is virtual output 4 which is parameter “= Virt Op 4".

   98: The operator preceding the output is timer 2, which is operand “TIMER 2". Note that the settings required for the timer are established in the timer programming section.

   97: The operator preceding timer 2 is OR #2, a 3-input OR, which is parameter “OR(3)”.

   96: The lowest input to OR #2 is operand “Cont Ip H1c On”.

   95: The center input to OR #2 is operand “TIMER 1".

   94: The input to timer 1 is operand “Virt Op 3 On".

   93: The upper input to OR #2 is operand “LATCH (S,R)”.

   92: There are two inputs to a latch, and the input immediately preceding the latch reset is OR #1, a 4-input OR, which is parameter “OR(4)”.

   91: The lowest input to OR #1 is operand “Virt Op 3 On".

   90: The input just above the lowest input to OR #1 is operand “XOR(2)”.

   89: The lower input to the XOR is operand “DIG ELEM 1 PKP”.

   88: The upper input to the XOR is operand “Virt Ip 1 On".

   87: The input just below the upper input to OR #1 is operand “Virt Op 2 On".

   86: The upper input to OR #1 is operand “Virt Op 1 On".

   85: The last parameter is used to set the latch, and is operand “Virt Op 4 On".

   The equation for virtual output 4 is:

```
[85] Virt Op 4 On
[86] Virt Op 1 On
[87] Virt Op 2 On
[88] Virt Ip 1 On
[89] DIG ELEM 1 PKP
[90] XOR(2)
[91] Virt Op 3 On
[92] OR(4)
[93] LATCH (S,R)
[94] Virt Op 3 On
[95] TIMER 1
[96] Cont Ip H1c On
[97] OR(3)
[98] TIMER 2
[99] = Virt Op 4
```

It is now possible to check that the selection of parameters will produce the required logic by converting the set of parameters into a logic diagram. The result of this process is shown below, which is compared to the logic for virtual output 4 diagram as a check.

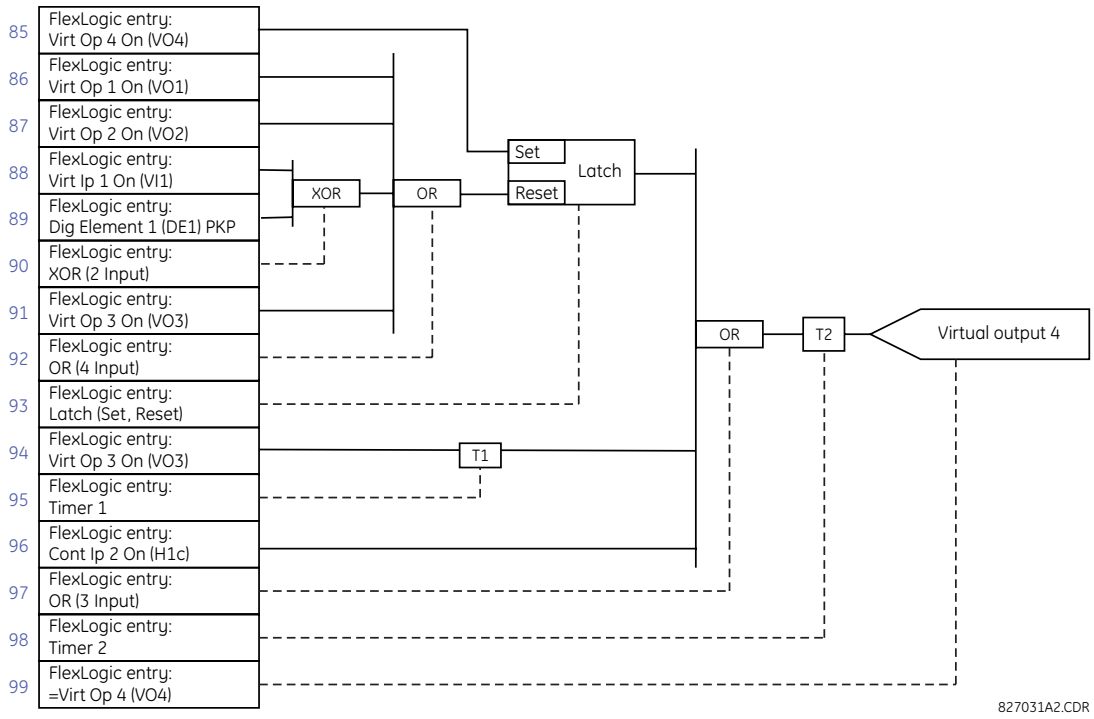

Figure 5–60: FLEXLOGIC EQUATION FOR VIRTUAL OUTPUT 4

7. Now write the complete FlexLogic expression required to implement the logic, making an effort to assemble the equation in an order where Virtual Outputs that will be used as inputs to operators are created before needed. In cases where a lot of processing is required to perform logic, this may be difficult to achieve, but in most cases will not cause problems as all logic is calculated at least four times per power frequency cycle. The possibility of a problem caused by sequential processing emphasizes the necessity to test the performance of FlexLogic before it is placed in service.

   In the following equation, virtual output 3 is used as an input to both latch 1 and timer 1 as arranged in the order shown below:

```
DIG ELEM 2 OP
Cont Ip H1c On
NOT
AND(2)
= Virt Op 3
Virt Op 4 On
Virt Op 1 On
Virt Op 2 On
Virt Ip 1 On
DIG ELEM 1 PKP
XOR(2)
Virt Op 3 On
OR(4)
LATCH (S,R)
Virt Op 3 On
TIMER 1
Cont Ip H1c On
OR(3)
TIMER 2
= Virt Op 4
END
```

   In the expression above, the virtual output 4 input to the four-input OR is listed before it is created. This is typical of a form of feedback, in this case, used to create a seal-in effect with the latch, and is correct.

8. The logic should always be tested after it is loaded into the relay, in the same fashion as has been used in the past. Testing can be simplified by placing an "END" operator within the overall set of FlexLogic equations. The equations will then only be evaluated up to the first "END" operator.

   The "On" and "Off" operands can be placed in an equation to establish a known set of conditions for test purposes, and the "INSERT" and "DELETE" commands can be used to modify equations.

5.5.5 FLEXLOGIC EQUATION EDITOR

PATH: SETTINGS ⇨⇩ FLEXLOGIC ⇨ FLEXLOGIC EQUATION EDITOR

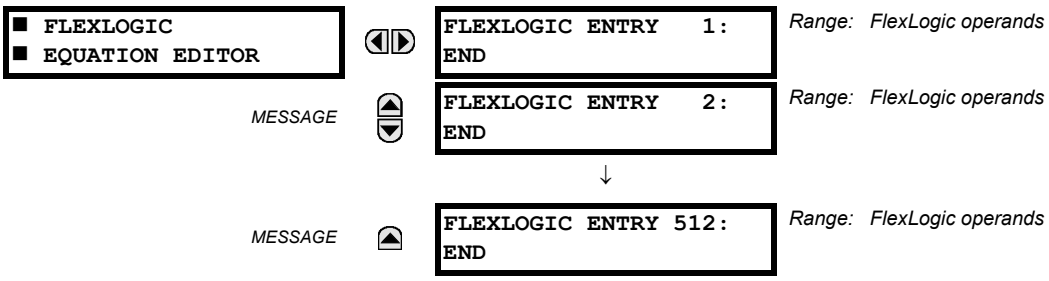

There are 512 FlexLogic entries available, numbered from 1 to 512, with default END entry settings. If a "Disabled" Element is selected as a FlexLogic entry, the associated state flag will never be set to '1'. The '+/–' key may be used when editing FlexLogic equations from the keypad to quickly scan through the major parameter types.

5.5.6 FLEXLOGIC TIMERS

PATH: SETTINGS ⇨⇩ FLEXLOGIC ⇨⇩ FLEXLOGIC TIMERS ⇨ FLEXLOGIC TIMER 1(32)

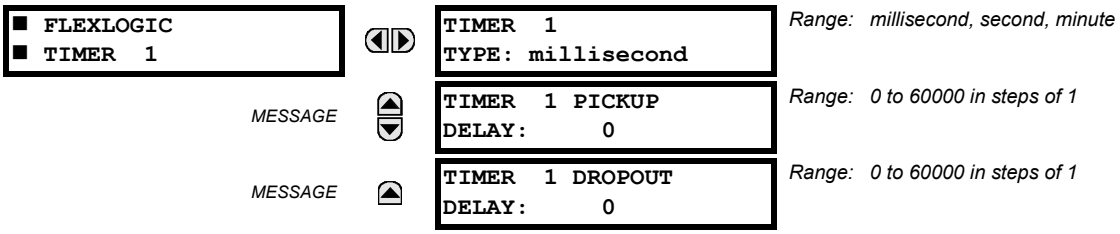

There are 32 identical FlexLogic timers available. These timers can be used as operators for FlexLogic equations.

- **TIMER 1 TYPE:** This setting is used to select the time measuring unit.
- **TIMER 1 PICKUP DELAY:** Sets the time delay to pickup. If a pickup delay is not required, set this function to "0".
- **TIMER 1 DROPOUT DELAY:** Sets the time delay to dropout. If a dropout delay is not required, set this function to "0".

PATH: SETTING ⇨⇩ FLEXLOGIC ⇨⇩ FLEXELEMENTS ⇨ FLEXELEMENT 1(16)

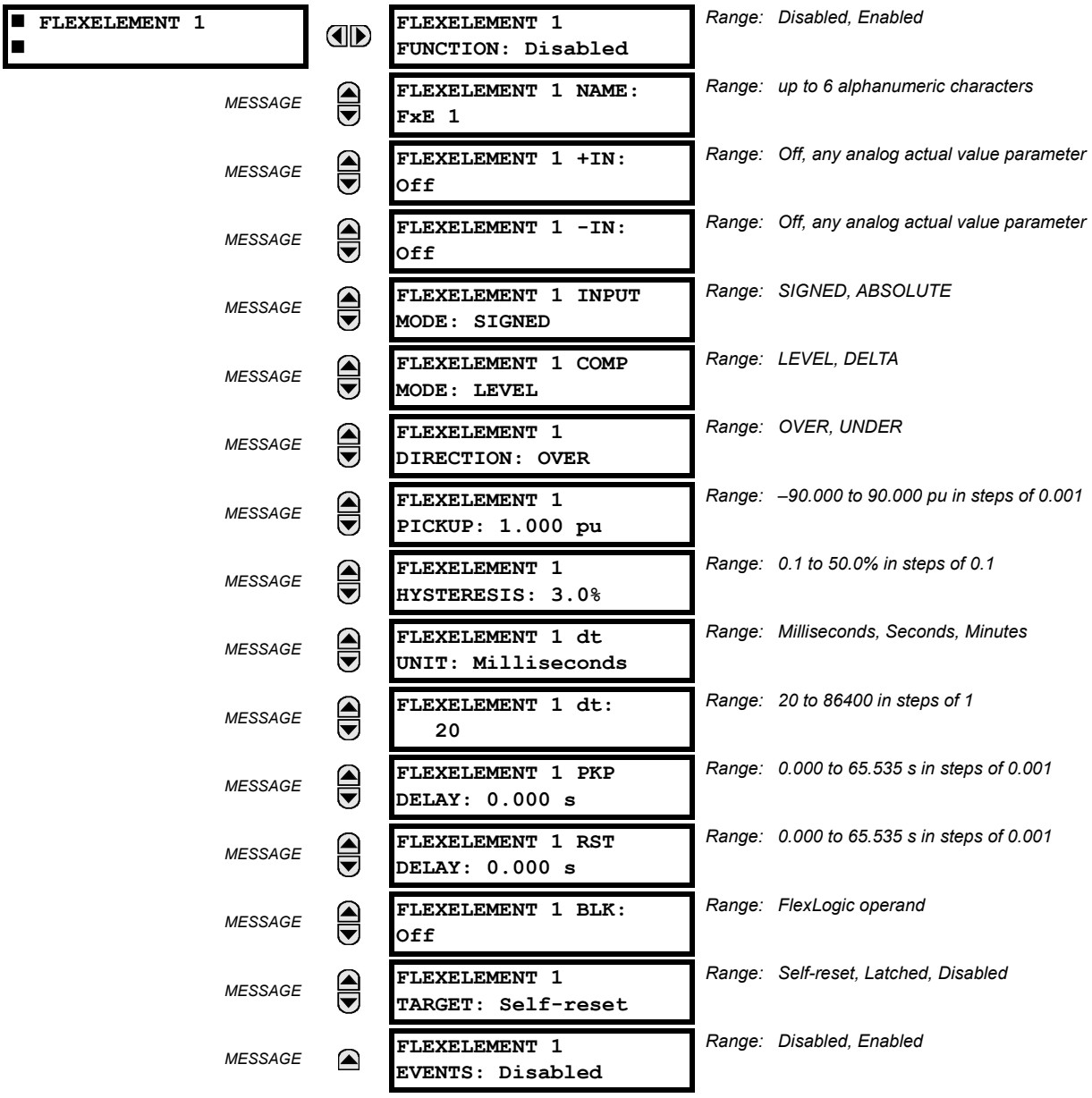

A FlexElement is a universal comparator that can be used to monitor any analog actual value calculated by the relay or a net difference of any two analog actual values of the same type. The effective operating signal could be treated as a signed number or its absolute value could be used as per user's choice.

FlexElements run every half power cycle (every four protection passes).

The element can be programmed to respond either to a signal level or to a rate-of-change (delta) over a pre-defined period of time. The output operand is asserted when the operating signal is higher than a threshold or lower than a threshold as per user's choice.

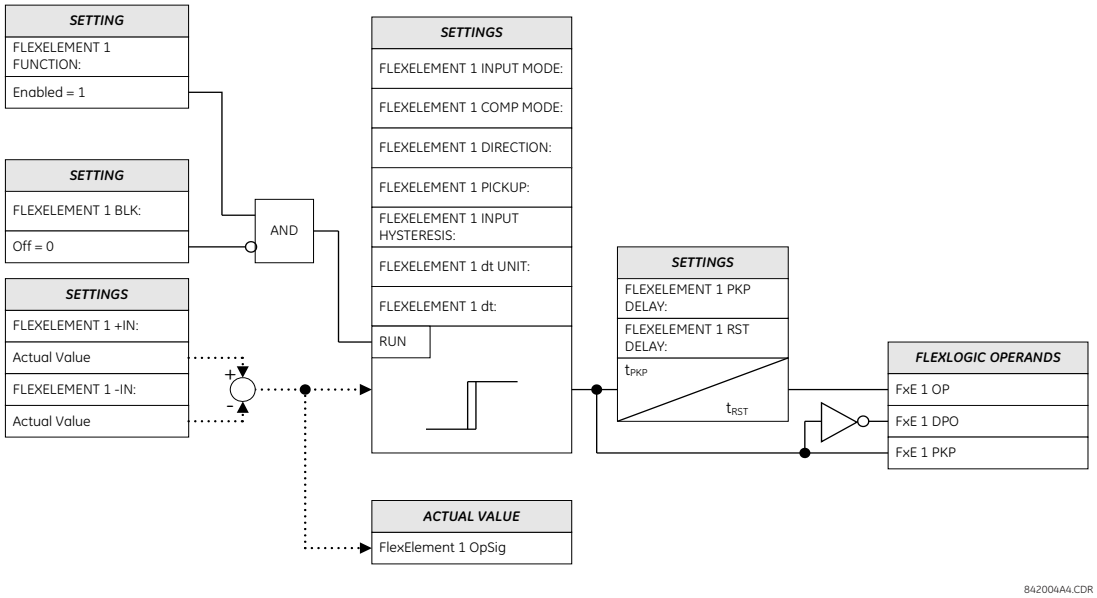

Figure 5–61: FLEXELEMENT SCHEME LOGIC

The **FLEXELEMENT 1 +IN** setting specifies the first (non-inverted) input to the FlexElement. Zero is assumed as the input if this setting is set to "Off". For proper operation of the element at least one input must be selected. Otherwise, the element will not assert its output operands.

This **FLEXELEMENT 1 –IN** setting specifies the second (inverted) input to the FlexElement. Zero is assumed as the input if this setting is set to "Off". For proper operation of the element at least one input must be selected. Otherwise, the element will not assert its output operands. This input should be used to invert the signal if needed for convenience, or to make the element respond to a differential signal such as for a top-bottom oil temperature differential alarm. The element will not operate if the two input signals are of different types, for example if one tries to use active power and phase angle to build the effective operating signal.

The element responds directly to the differential signal if the **FLEXELEMENT 1 INPUT MODE** setting is set to "Signed". The element responds to the absolute value of the differential signal if this setting is set to "Absolute". Sample applications for the "Absolute" setting include monitoring the angular difference between two phasors with a symmetrical limit angle in both directions, monitoring power regardless of its direction, or monitoring a trend.

The element responds directly to its operating signal – as defined by the **FLEXELEMENT 1 +IN**, **FLEXELEMENT 1 –IN** and **FLEXELEMENT 1 INPUT MODE** settings – if the **FLEXELEMENT 1 COMP MODE** setting is set to "Level". The element responds to the rate of change of its operating signal if the **FLEXELEMENT 1 COMP MODE** setting is set to "Delta". In this case the **FLEXELEMENT 1 dt UNIT** and **FLEXELEMENT 1 dt** settings specify how the rate of change is derived.

The **FLEXELEMENT 1 DIRECTION** setting enables the relay to respond to either high or low values of the operating signal. The following figure explains the application of the **FLEXELEMENT 1 DIRECTION**, **FLEXELEMENT 1 PICKUP** and **FLEXELEMENT 1 HYSTERESIS** settings.

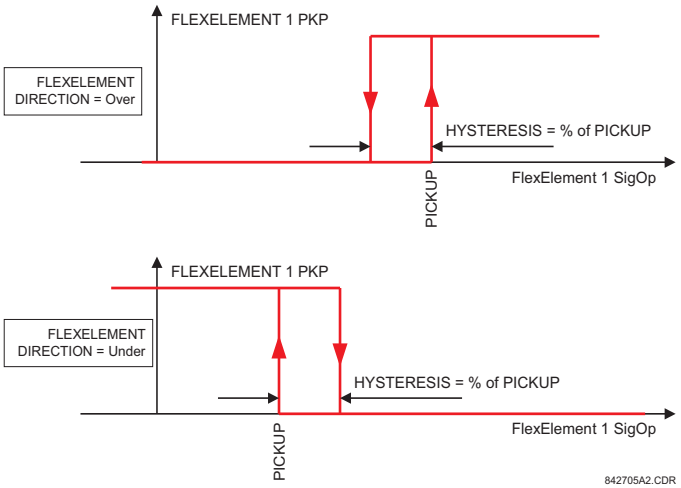

Figure 5–62: FLEXELEMENT DIRECTION, PICKUP, AND HYSTERESIS

In conjunction with the **FLEXELEMENT 1 INPUT MODE** setting the element could be programmed to provide two extra characteristics as shown in the figure below.

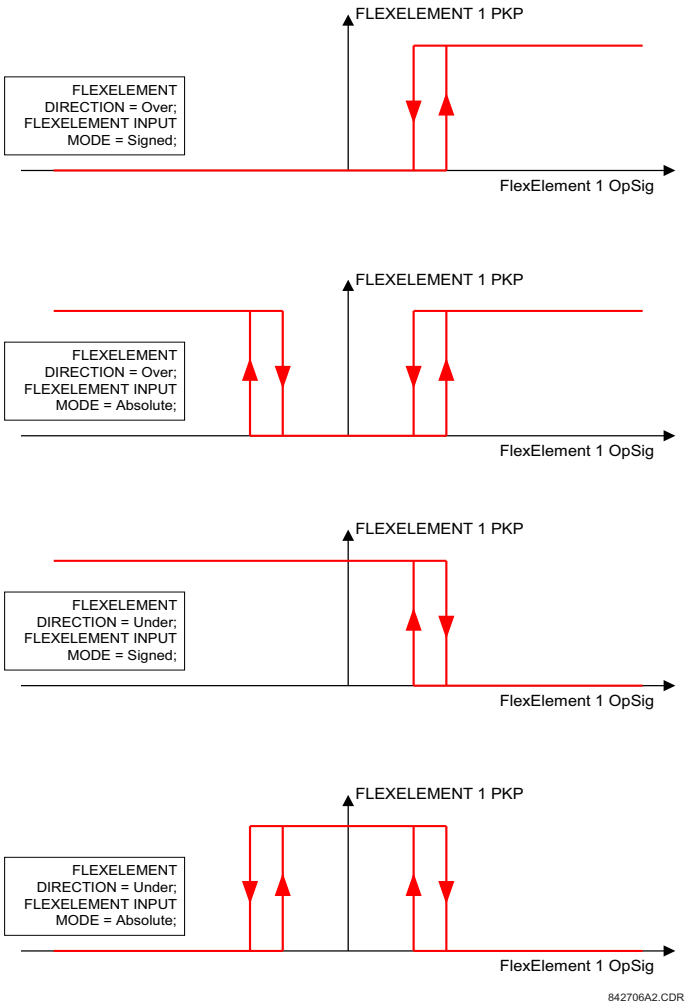

Figure 5–63: FLEXELEMENT INPUT MODE SETTING

The **FLEXELEMENT 1 PICKUP** setting specifies the operating threshold for the effective operating signal of the element. If set to "Over", the element picks up when the operating signal exceeds the **FLEXELEMENT 1 PICKUP** value. If set to "Under", the element picks up when the operating signal falls below the **FLEXELEMENT 1 PICKUP** value.

When using FlexElements for Voltage Elements, 1 pu is always equal to phase to ground voltage nominal secondary voltage, even if you select a phase to phase voltage as an operating quantity.

The **FLEXELEMENT 1 HYSTERESIS** setting controls the element dropout. It should be noticed that both the operating signal and the pickup threshold can be negative facilitating applications such as reverse power alarm protection. The FlexElement can be programmed to work with all analog actual values measured by the relay. The **FLEXELEMENT 1 PICKUP** setting is entered in per-unit values using the following definitions of the base units:

Table 5–22: FLEXELEMENT BASE UNITS

DCmA	BASE = maximum value of the **DCMA INPUT MAX** setting for the two transducers configured under the +IN and –IN inputs.
DELTA TIME	BASE = 1 µs
FIELD CURRENT	I_{BASE} = maximum value setting defined for the specific transducer input configured
FIELD GROUND CURRENT	I_{BASE} = 5 mA
FIELD GROUND FAULT LOCATION	BASE = 100%

Table 5–22: FLEXELEMENT BASE UNITS

FIELD GROUND INJECTED VOLTAGE	V_{BASE} = 15 V
FIELD GROUND RESISTANCE	R_{BASE} = 250 KΩ
FIELD VOLTAGE	V_{BASE} = 500 V
FREQUENCY	f_{BASE} = 1 Hz
FREQUENCY RATE OF CHANGE	df/dt_{BASE} = 1 Hz/s
PHASE ANGLE	φ_{BASE} = 360 degrees (see the UR angle referencing convention)
POWER FACTOR	PF_{BASE} = 1.00
RTDs	BASE = 100°C
SENSITIVE DIR POWER (Sns Dir Power)	P_{BASE} = maximum value of 3 × V_{BASE} × I_{BASE} for the +IN and –IN inputs of the sources configured for the sensitive power directional element(s).
SOURCE CURRENT	I_{BASE} = maximum nominal primary RMS value of the +IN and –IN inputs
SOURCE ENERGY (Positive and Negative Watthours, Positive and Negative Varhours)	E_{BASE} = 10000 MWh or MVAh, respectively
SOURCE POWER	P_{BASE} = maximum value of V_{BASE} × I_{BASE} for the +IN and –IN inputs
SOURCE VOLTAGE	V_{BASE} = maximum nominal primary RMS value of the +IN and –IN inputs
STATOR DIFFERENTIAL CURRENT (Stator Diff Iar, Ibr, and Icr)	I_{BASE} = maximum primary RMS value of the +IN and –IN inputs (CT primary for source currents, and bus reference primary current for bus differential currents)
STATOR GROUND 3RD HARMONIC VOLTAGES (Stator Gnd Vn/V0 3rd)	V_{BASE} = Primary auxiliary voltage of the **STATOR GROUND SOURCE**
STATOR GROUND RESISTANCE	R_{BASE} = 10 KΩ
STATOR GROUND SUB-HARMONIC VOLTAGE	V_{BASE} = nominal secondary voltage of auxiliary VT for the stator ground source
STATOR GROUND SUB-HARMONIC CURRENT	I_{BASE} = ground CT primary current of stator ground source
STATOR RESTRAINING CURRENT (Stator Diff Iad, Ibd, and Icd)	I_{BASE} = maximum primary RMS value of the +IN and –IN inputs (CT primary for source currents, and bus reference primary current for bus differential currents)
SYNCHROCHECK (Max Delta Volts)	V_{BASE} = maximum primary RMS value of all the sources related to the +IN and –IN inputs
VOLTS PER HERTZ	BASE = 1.00 pu
Z_{BASE}	Z_{BASE} = PhaseVTSecondary / PhaseCTSecondary, where PhaseVTSecondary and PhaseCTSecondary are the secondary nominal voltage and the secondary nominal current of the distance source. In case multiple CT inputs are summed as one source current and mapped as the distance source, use the PhaseCTSecondary value from the CT with the highest primary nominal current. Distance source is specified in setting under **SETTINGS > GROUPED ELEMENTS > SETTING GROUP 1(6) > DISTANCE**. PhaseVTSecondary and PhaseCTSecondary are specified in setting under **SETTINGS > SYSTEM SETUP > AC INPUTS**.

The **FLEXELEMENT 1 HYSTERESIS** setting defines the pickup–dropout relation of the element by specifying the width of the hysteresis loop as a percentage of the pickup value as shown in the FlexElement Direction, Pickup, and Hysteresis diagram.

The **FLEXELEMENT 1 DT UNIT** setting specifies the time unit for the setting **FLEXELEMENT 1 dt**. This setting is applicable only if **FLEXELEMENT 1 COMP MODE** is set to “Delta”. The **FLEXELEMENT 1 DT** setting specifies duration of the time interval for the rate of change mode of operation. This setting is applicable only if **FLEXELEMENT 1 COMP MODE** is set to “Delta”.

This **FLEXELEMENT 1 PKP DELAY** setting specifies the pickup delay of the element. The **FLEXELEMENT 1 RST DELAY** setting specifies the reset delay of the element.

PATH: SETTINGS ⇨⇩ FLEXLOGIC ⇨⇩ NON-VOLATILE LATCHES ⇨ LATCH 1(16)

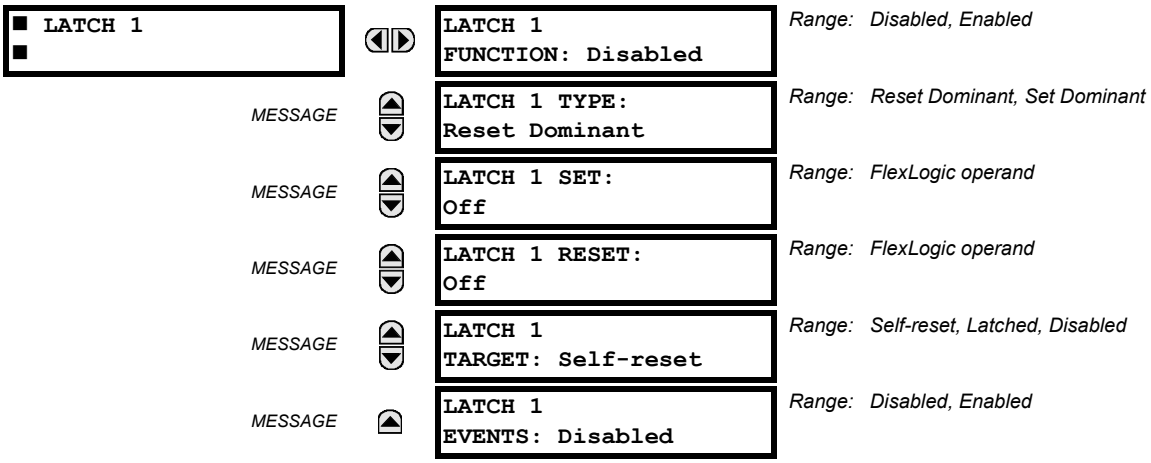

The non-volatile latches provide a permanent logical flag that is stored safely and will not reset upon reboot after the relay is powered down. Typical applications include sustaining operator commands or permanently block relay functions, such as Autorecloser, until a deliberate interface action resets the latch. The settings element operation is described below:

- **LATCH 1 TYPE**: This setting characterizes Latch 1 to be Set- or Reset-dominant.
- **LATCH 1 SET**: If asserted, the specified FlexLogic operands 'sets' Latch 1.
- **LATCH 1 RESET**: If asserted, the specified FlexLogic operand 'resets' Latch 1.

LATCH N TYPE	LATCH N SET	LATCH N RESET	LATCH N ON	LATCH N OFF
Reset Dominant	ON	OFF	ON	OFF
	OFF	OFF	Previous State	Previous State
	ON	ON	OFF	ON
	OFF	ON	OFF	ON
Set Dominant	ON	OFF	ON	OFF
	ON	ON	ON	OFF
	OFF	OFF	Previous State	Previous State
	OFF	ON	OFF	ON

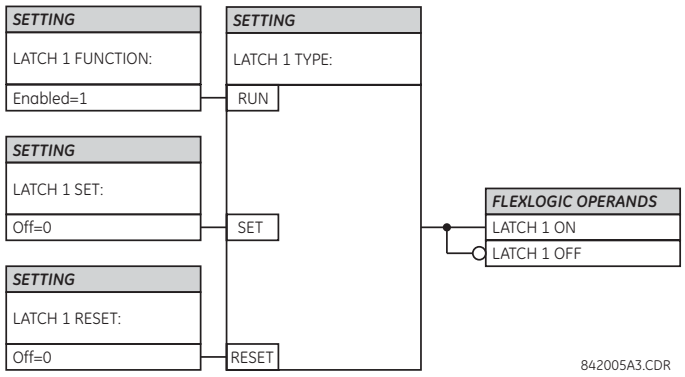

Figure 5–64: NON-VOLATILE LATCH OPERATION TABLE (N = 1 to 16) AND LOGIC

5.6.1 OVERVIEW

Each protection element can be assigned up to six different sets of settings according to setting group designations 1 to 6. The performance of these elements is defined by the active setting group at a given time. Multiple setting groups allow the user to conveniently change protection settings for different operating situations (for example, altered power system configuration, season of the year, etc.). The active setting group can be preset or selected via the **SETTING GROUPS** menu (see the Control Elements section later in this chapter). See also the Introduction to Elements section at the beginning of this chapter.

5.6.2 SETTING GROUP

PATH: SETTINGS ⇩ GROUPED ELEMENTS ⇨ SETTING GROUP 1(6)

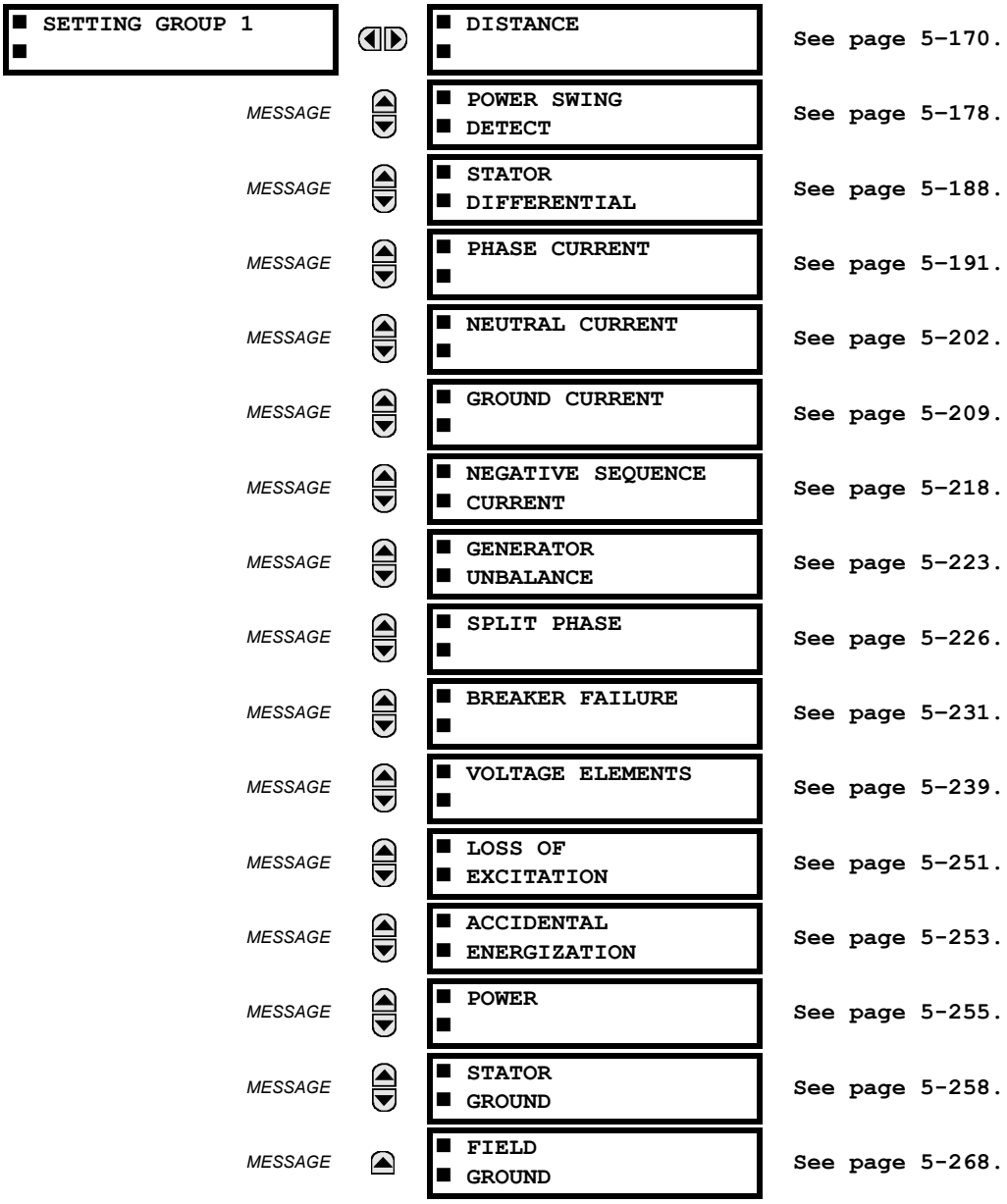

Each of the six setting group menus is identical. Setting group 1 (the default active group) automatically becomes active if no other group is active (see the Control Elements section for additional details).

If the device incorrectly switches to group 1 after power cycling, upgrade the firmware to version 7.25, 7.31, or later to correct this issue.

a) MAIN MENU

PATH: SETTINGS ⇨⇩ GROUPED ELEMENTS ⇨ SETTING GROUP 1(6) ⇨⇩ DISTANCE

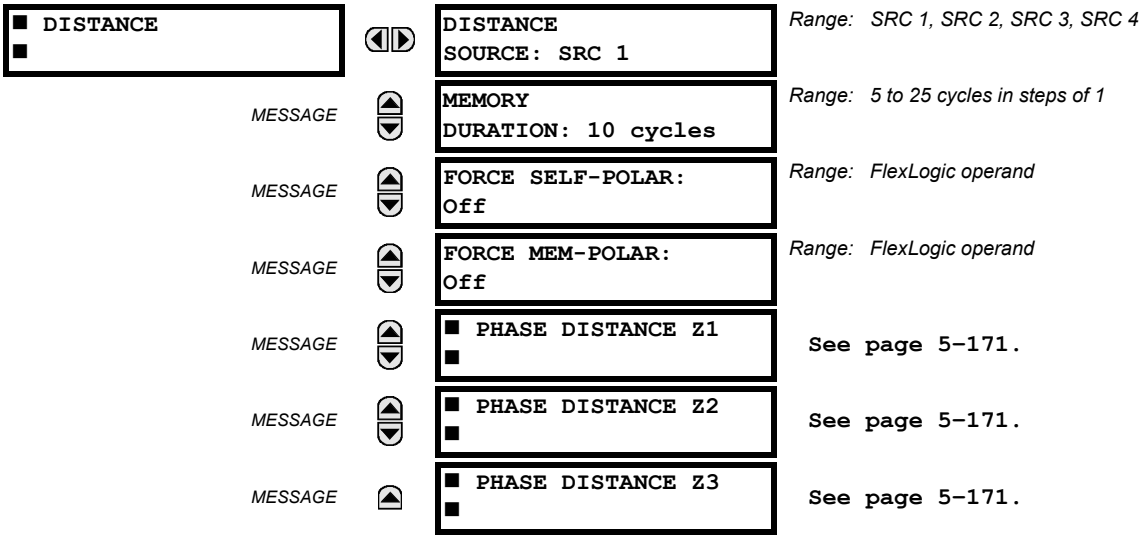

The **DISTANCE SOURCE** identifies the signal source for all distance functions. The mho distance functions use a dynamic characteristic: the positive-sequence voltage – either memorized or actual – is used as a polarizing signal. The memory voltage is also used by the built-in directional supervising functions applied for both the mho and quad characteristics.

The **MEMORY DURATION** setting specifies the length of time a memorized positive-sequence voltage should be used in the distance calculations. After this interval expires, the relay checks the magnitude of the actual positive-sequence voltage. If it is higher than 10% of the nominal, the actual voltage is used, if lower – the memory voltage continues to be used.

The memory is established when the positive-sequence voltage stays above 80% of its nominal value for five power system cycles. For this reason it is important to ensure that the nominal secondary voltage of the VT is entered correctly under the SETTINGS ⇨⇩ SYSTEM SETUP ⇨ AC INPUTS ⇨⇩ VOLTAGE BANK menu.

Set **MEMORY DURATION** long enough to ensure stability on close-in reverse three-phase faults. For this purpose, the maximum fault clearing time (breaker fail time) in the substation should be considered. On the other hand, the **MEMORY DURATION** cannot be too long as the power system may experience power swing conditions rotating the voltage and current phasors slowly while the memory voltage is static, as frozen at the beginning of the fault. Keeping the memory in effect for too long may eventually lead to incorrect operation of the distance functions.

The distance zones can be forced to become self-polarized through the **FORCE SELF-POLAR** setting. Any user-selected condition (FlexLogic operand) can be configured to force self-polarization. When the selected operand is asserted (logic 1), the distance functions become self-polarized regardless of other memory voltage logic conditions. When the selected operand is de-asserted (logic 0), the distance functions follow other conditions of the memory voltage logic as shown below.

The distance zones can be forced to become memory-polarized through the **FORCE MEM-POLAR** setting. Any user-selected condition (any FlexLogic operand) can be configured to force memory polarization. When the selected operand is asserted (logic 1), the distance functions become memory-polarized regardless of the positive-sequence voltage magnitude at this time. When the selected operand is de-asserted (logic 0), the distance functions follow other conditions of the memory voltage logic.

The **FORCE SELF-POLAR** and **FORCE MEM-POLAR** settings should never be asserted simultaneously. If this happens, the logic will give higher priority to forcing self-polarization as indicated in the logic below. This is consistent with the overall philosophy of distance memory polarization.

NOTE

The memory polarization cannot be applied permanently but for a limited time only; the self-polarization may be applied permanently and therefore should take higher priority.

NOTE

In firmware 7.20, when the fast distance algorithm is applied, the HardFiber brick is not supported. The fast distance algorithm is supported by the G60. It is not supported by the HardFiber, which maintains the original distance element timing.

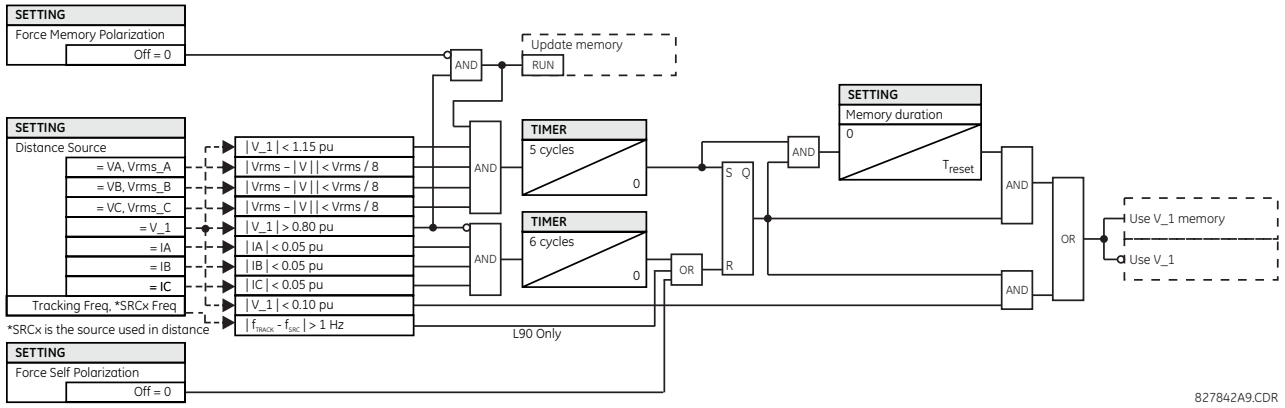

Figure 5–65: MEMORY VOLTAGE LOGIC

b) PHASE DISTANCE (ANSI 21P)

PATH: SETTINGS ⇨⇩ GROUPED ELEMENTS ⇨ SETTING GROUP 1(6) ⇨⇩ DISTANCE ⇨⇩ PHASE DISTANCE Z1(Z3)

■ PHASE DISTANCE Z1 ■		PHS DIST Z1 FUNCTION: Disabled	Range: Disabled, Enabled
	MESSAGE	PHS DIST Z1 DIR: Forward	Range: Forward, Reverse, Non-directional
	MESSAGE	PHS DIST Z1 SHAPE: Mho	Range: Mho. This value is fixed and cannot be changed.
	MESSAGE	PHS DIST Z1 XFMR VOL CONNECTION: None	Range: None, Dy1, Dy3, Dy5, Dy7, Dy9, Dy11, Yd1, Yd3, Yd5, Yd7, Yd9, Yd11
	MESSAGE	PHS DIST Z1 XFMR CUR CONNECTION: None	Range: None, Dy1, Dy3, Dy5, Dy7, Dy9, Dy11, Yd1, Yd3, Yd5, Yd7, Yd9, Yd11
	MESSAGE	PHS DIST Z1 REACH: 2.00 Ω	Range: 0.02 to 500.00 ohms in steps of 0.01
	MESSAGE	PHS DIST Z1 RCA: 85°	Range: 30 to 90° in steps of 1
	MESSAGE	PHS DIST Z1 REV REACH: 2.00 Ω	Range: 0.02 to 500.00 ohms in steps of 0.01
	MESSAGE	PHS DIST Z1 REV REACH RCA: 85°	Range: 30 to 90° in steps of 1
	MESSAGE	PHS DIST Z1 COMP LIMIT: 90°	Range: 30 to 90° in steps of 1
	MESSAGE	PHS DIST Z1 DIR RCA: 85°	Range: 30 to 90° in steps of 1
	MESSAGE	PHS DIST Z1 DIR COMP LIMIT: 90°	Range: 30 to 90° in steps of 1
	MESSAGE	PHS DIST Z1 SUPV: 0.200 pu	Range: 0.050 to 30.000 pu in steps of 0.001

MESSAGE
PHS DIST Z1 VOLT LEVEL: 0.000 pu
Range: 0.000 to 5.000 pu in steps of 0.001

MESSAGE
PHS DIST Z1 DELAY: 0.000 s
Range: 0.000 to 65.535 s in steps of 0.001

MESSAGE
PHS DIST Z1 BLK: Off
Range: FlexLogic operand

MESSAGE
PHS DIST Z1 TARGET: Self-reset
Range: Self-reset, Latched, Disabled

MESSAGE
PHS DIST Z1 EVENTS: Disabled
Range: Disabled, Enabled

The phase mho distance function uses a dynamic 100% memory-polarized mho characteristic with additional reactance, directional, and overcurrent supervising characteristics. When set to "Non-directional", the mho function becomes an offset mho with the reverse reach controlled independently from the forward reach, and all the directional characteristics removed.

Each phase distance zone is configured individually through its own setting menu. All of the settings can be independently modified for each of the zones except:

1. The **SIGNAL SOURCE** setting (common for the distance elements of all zones as entered under **SETTINGS ⇨⇩ GROUPED ELEMENTS ⇨ SETTING GROUP 1(6) ⇨⇩ DISTANCE**).
2. The **MEMORY DURATION** setting (common for the distance elements of all zones as entered under **SETTINGS ⇨⇩ GROUPED ELEMENTS ⇨ SETTING GROUP 1(6) ⇨⇩ DISTANCE**).

5

The common distance settings described earlier must be properly chosen for correct operation of the phase distance elements. Additional details may be found in the Theory of Operation chapter.

NOTICE

Ensure that the Phase VT Secondary Voltage setting (see the **SETTINGS ⇨⇩ SYSTEM SETUP ⇨ AC INPUTS ⇨⇩ VOLTAGE BANK** menu) is set correctly to prevent improper operation of associated memory action.

- **PHS DIST Z1 DIR:** All phase distance zones are reversible. The forward direction is defined by the **PHS DIST Z1 RCA** setting, whereas the reverse direction is shifted 180° from that angle. The non-directional zone spans between the forward reach impedance defined by the **PHS DIST Z1 REACH** and **PHS DIST Z1 RCA** settings, and the reverse reach impedance defined by **PHS DIST Z1 REV REACH** and **PHS DIST Z1 REV REACH RCA** as illustrated below.

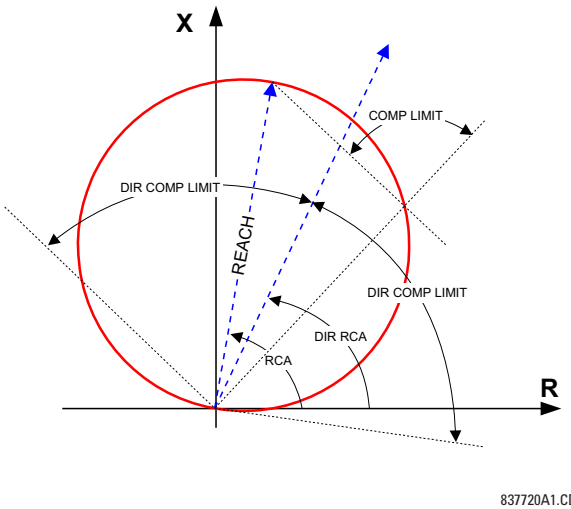

Figure 5–66: DIRECTIONAL MHO DISTANCE CHARACTERISTIC

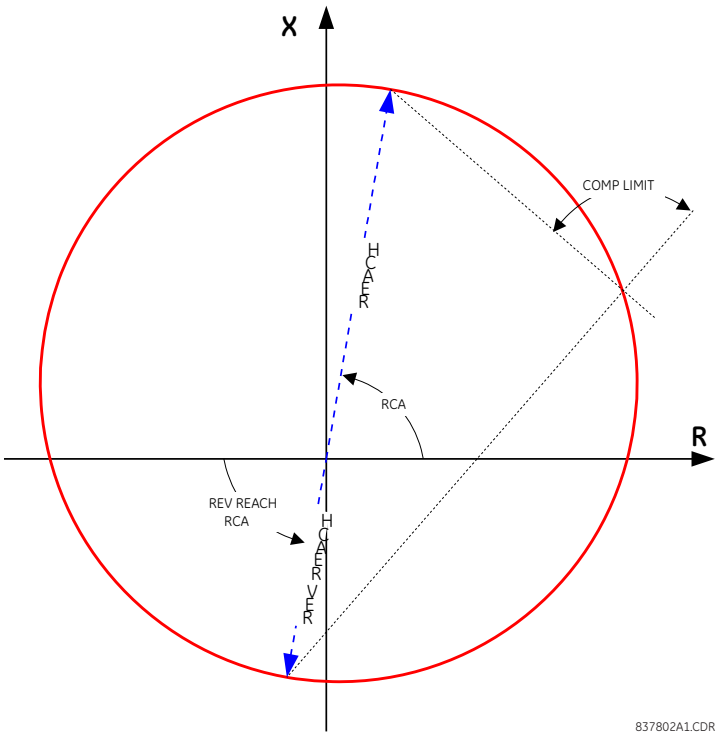

Figure 5–67: NON-DIRECTIONAL MHO DISTANCE CHARACTERISTIC

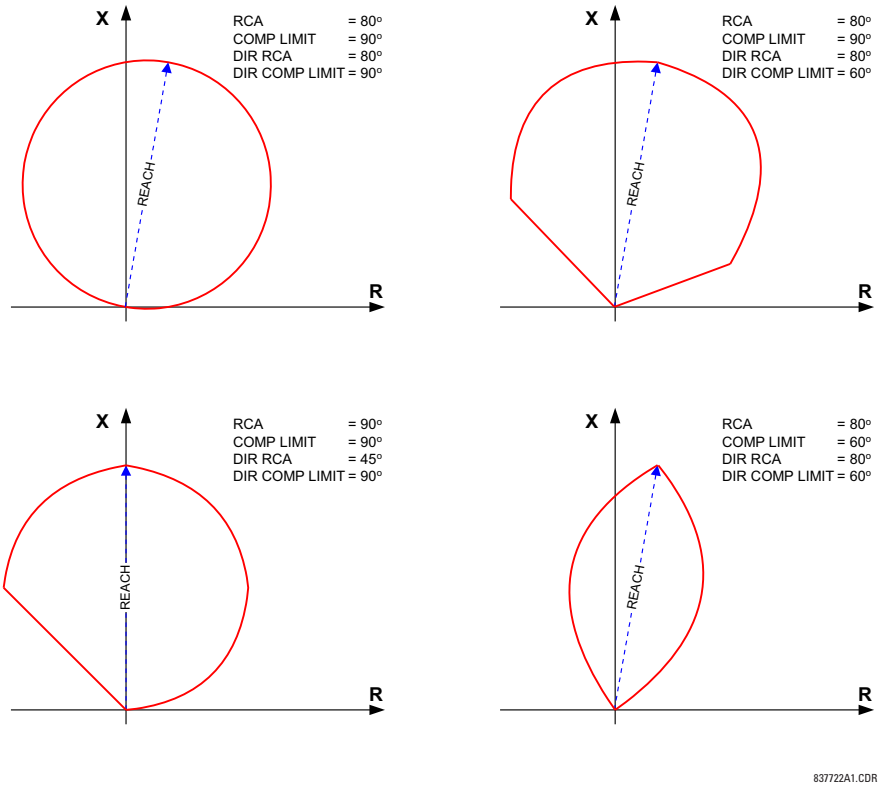

Figure 5–68: MHO DISTANCE CHARACTERISTIC SAMPLE SHAPES

- **PHS DIST Z1 XFMR VOL CONNECTION:** The phase distance elements can be applied to look through a three-phase delta-wye or wye-delta power transformer. In addition, VTs and CTs could be located independently from one another at different windings of the transformer. If the potential source is located at the correct side of the transformer, this setting shall be set to "None".

  This setting specifies the location of the voltage source with respect to the involved power transformer in the direction of the zone. The following figure illustrates the usage of this setting. In section (a), zone 1 is looking through a transformer from the delta into the wye winding. Therefore, the Z1 setting shall be set to "Dy11". In section (b), Zone 3 is looking through a transformer from the wye into the delta winding. Therefore, the Z3 setting shall be set to "Yd1". The zone is restricted by the potential point (location of the VTs) as illustrated in Figure (e).

- **PHS DIST Z1 XFMR CUR CONNECTION:** This setting specifies the location of the current source with respect to the involved power transformer in the direction of the zone. In section (a) of the following figure, zone 1 is looking through a transformer from the delta into the wye winding. Therefore, the Z1 setting shall be set to "Dy11". In section (b), the CTs are located at the same side as the read point. Therefore, the Z3 setting shall be set to "None".

  See the Theory of Operation chapter for more details, and the Application of Settings chapter for information on calculating distance reach settings in applications involving power transformers.

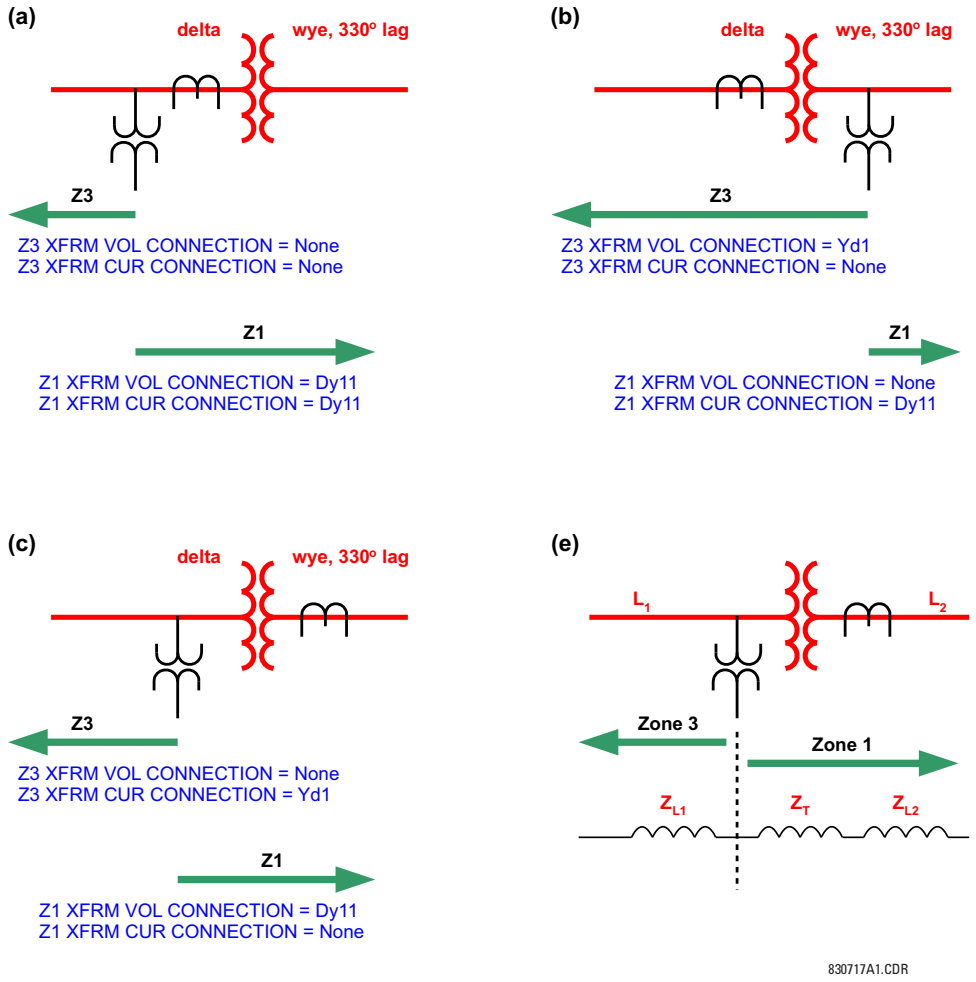

Figure 5–69: APPLICATIONS OF THE PH DIST XFMR VOL/CUR CONNECTION SETTINGS

- **PHS DIST Z1 REACH:** This setting defines the zone reach for the forward and reverse applications. In the non-directional applications, this setting defines the forward reach of the zone. The reverse reach impedance in non-directional applications is set independently. The reach impedance is entered in secondary ohms. The reach impedance angle is entered as the **PHS DIST Z1 RCA** setting.

To achieve specified operating speed of distance elements, the relay internally calculates source to line impedance ratio (SIR) from fault phasors. In these calculations, line impedance is estimated based on the zone 1 reach setting. Therefore, in order to calculate the SIR value properly and to maintain the optimal operating speed of the distance elements, you need to set zone 1 reach with a regular 80 to 85% of the line impedance reach setting, even when zone 1 is disabled.

- **PHS DIST Z1 RCA:** This setting specifies the characteristic angle (similar to the 'maximum torque angle' in previous technologies) of the phase distance characteristic for the forward and reverse applications. In the non-directional applications, this setting defines the angle of the forward reach impedance. The reverse reach impedance in the non-directional applications is set independently. The setting is an angle of reach impedance as shown in the distance characteristic figures shown earlier. This setting is independent from **PHS DIST Z1 DIR RCA**, the characteristic angle of an extra directional supervising function.
- **PHS DIST Z1 REV REACH**: This setting defines the reverse reach of the zone set to non-directional (**PHS DIST Z1 DIR** setting). The value must be entered in secondary ohms. This setting does not apply when the zone direction is set to "Forward" or "Reverse".
- **PHS DIST Z1 REV REACH RCA**: This setting defines the angle of the reverse reach impedance if the zone is set to non-directional (**PHS DIST Z1 DIR** setting). This setting does not apply when the zone direction is set to "Forward" or "Reverse".
- **PHS DIST Z1 COMP LIMIT:** This setting shapes the operating characteristic, producing the lens-type characteristic of the mho function. The same limit angle applies to both the mho and supervising reactance comparators. This setting improves loadability of the protected line.
- **PHS DIST Z1 DIR RCA:** This setting selects the characteristic angle (or maximum torque angle) of the directional supervising function. The directional function is an extra supervising function as the dynamic mho characteristic itself is a directional one. The directional function uses the memory voltage for polarization. This setting typically equals the distance characteristic angle **PHS DIST Z1 RCA**.
- **PHS DIST Z1 DIR COMP LIMIT:** Selects the comparator limit angle for the directional supervising function.
- **PHS DIST Z1 SUPV:** The phase distance elements are supervised by the magnitude of the line-to-line current (fault loop current used for the distance calculations). For convenience, $\sqrt{3}$ is accommodated by the pickup (that is, before being used, the entered value of the threshold setting is multiplied by $\sqrt{3}$).

  If the minimum fault current level is sufficient, the current supervision pickup should be set above maximum full load current preventing maloperation under VT fuse fail conditions. This requirement may be difficult to meet for remote faults at the end of zones 2 and above. If this is the case, the current supervision pickup would be set below the full load current, but this may result in maloperation during fuse fail conditions.
- **PHS DIST Z1 VOLT LEVEL:** This setting is relevant for applications on series-compensated lines, or in general, if series capacitors are located between the relaying point and a point where the zone shall not overreach. For plain (non-compensated) lines, set to zero. Otherwise, the setting is entered in per unit of the phase VT bank configured under the **DISTANCE SOURCE**. Effectively, this setting facilitates dynamic current-based reach reduction. In non-directional applications (**PHS DIST Z1 DIR** set to "Non-directional"), this setting applies only to the forward reach of the non-directional zone. See the Theory of Operation and Applications of Settings chapters for information on calculating this setting for series compensated lines.
- **PHS DIST Z1 DELAY:** This setting allows the user to delay operation of the distance elements and implement stepped distance protection. The distance element timers for zones 2 and higher apply a short dropout delay to cope with faults located close to the zone boundary when small oscillations in the voltages or currents could inadvertently reset the timer. Zone 1 does not need any drop out delay since it is sealed-in by the presence of current.

  If the phase distance incorrectly resets and picks up based on phase selector supervision during a delay of more than three seconds, upgrade the device firmware to the latest version 7.2x release.
- **PHS DIST Z1 BLK:** This setting enables the user to select a FlexLogic operand to block a given distance element. VT fuse fail detection is one of the applications for this setting.

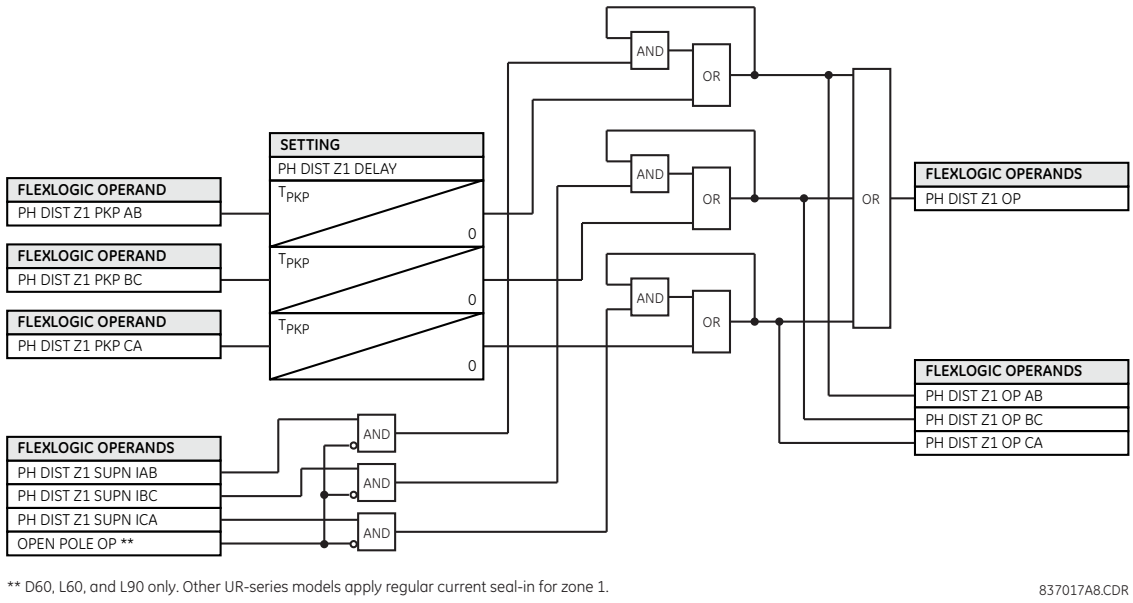

Figure 5–70: PHASE DISTANCE ZONE 1 OP SCHEME

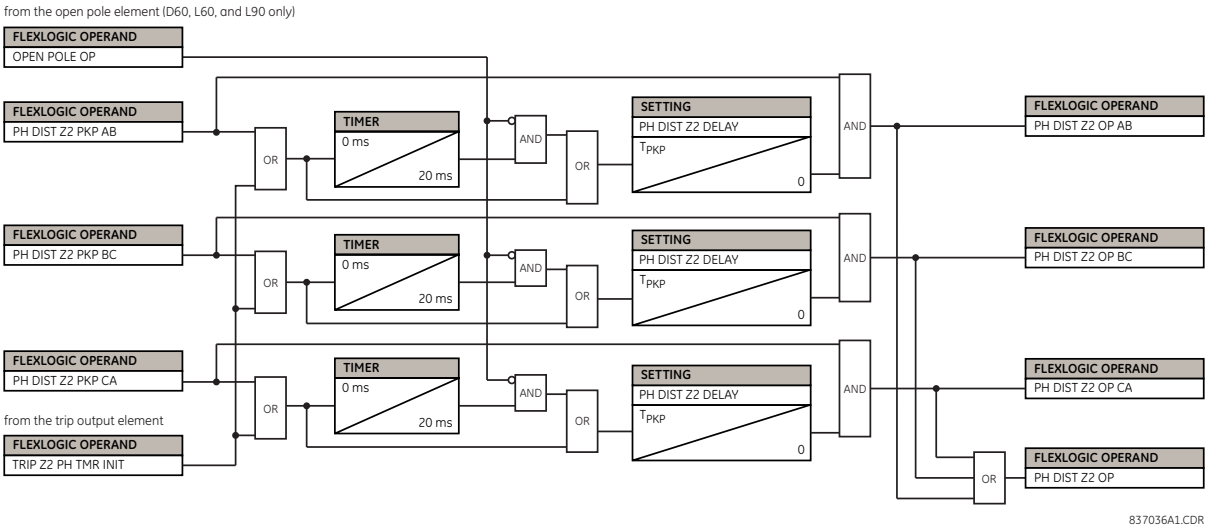

Figure 5–71: PHASE DISTANCE ZONE 2 OP SCHEME

NOTE

For phase distance zone 2, there is a provision to start the zone timer with other distance zones or loop the pickup flag to avoid prolonging phase distance zone 2 operation when the fault evolves from one type to another or migrates from the initial zone to zone 2. Desired zones in the trip output function should be assigned to accomplish this functionality.

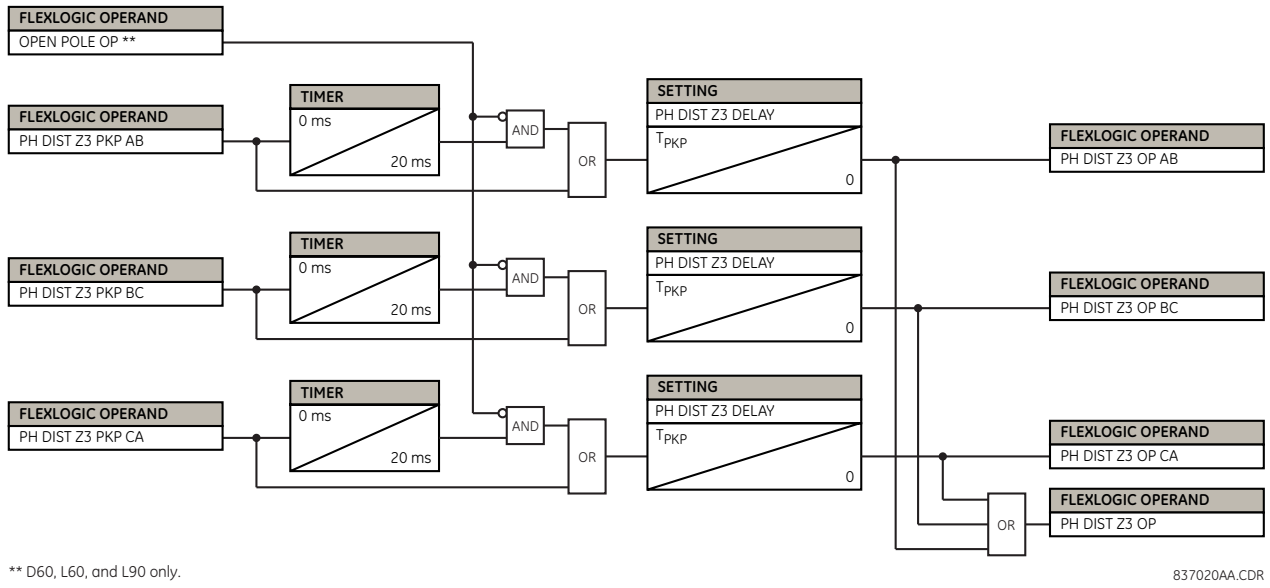

Figure 5–72: PHASE DISTANCE ZONES 3 AND HIGHER OP SCHEME

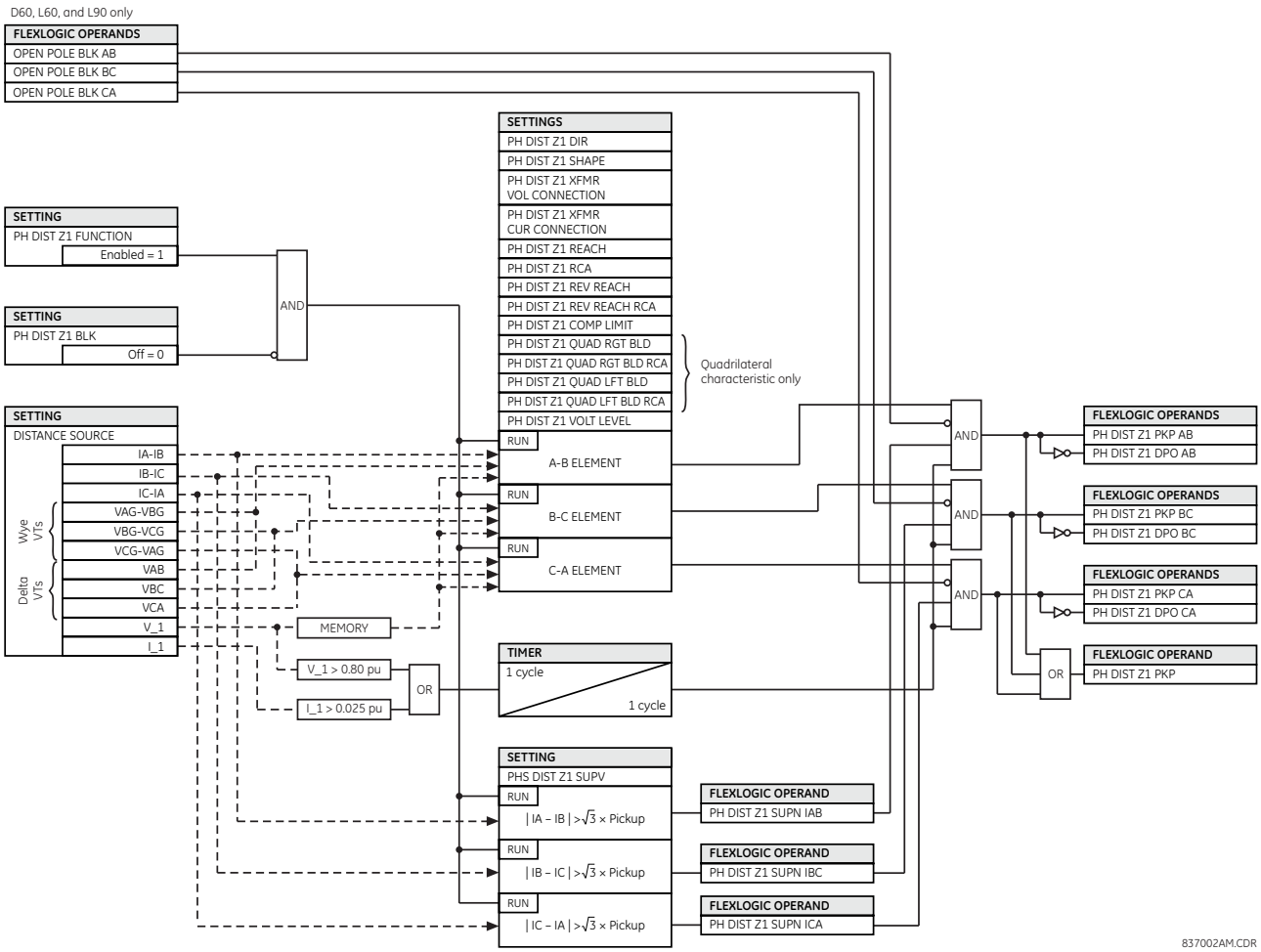

Figure 5–73: PHASE DISTANCE SCHEME LOGIC

5.6.4 POWER SWING DETECT (ANSI 68)

PATH: SETTINGS ⇨⇩ GROUPED ELEMENTS ⇨ SETTING GROUP 1(6) ⇨⇩ POWER SWING DETECT

■ POWER SWING ■ DETECT		POWER SWING FUNCTION: Disabled	Range: Disabled, Enabled
	MESSAGE	POWER SWING SOURCE: SRC 1	Range: SRC 1, SRC 2, SRC 3, SRC 4
	MESSAGE	POWER SWING SHAPE: Mho Shape	Range: Mho Shape, Quad Shape
	MESSAGE	POWER SWING MODE: Two Step	Range: Two Step, Three Step
	MESSAGE	POWER SWING SUPV: 0.600 pu	Range: 0.050 to 30.000 pu in steps of 0.001
	MESSAGE	POWER SW I2 SUPV ENAB: Off	Range: FlexLogic operand
	MESSAGE	POWER SWING I2 SUPV: 0.200 pu	Range: 0.050 to 30.000 pu in steps of 0.001
	MESSAGE	POWER SWING FWD REACH: 50.00 Ω	Range: 0.10 to 500.00 ohms in steps of 0.01
	MESSAGE	POWER SWING QUAD FWD REACH MID: 60.00 Ω	Range: 0.10 to 500.00 ohms in steps of 0.01
	MESSAGE	POWER SWING QUAD FWD REACH OUT: 70.00 Ω	Range: 0.10 to 500.00 ohms in steps of 0.01
	MESSAGE	POWER SWING FWD RCA: 75°	Range: 40 to 90° in steps of 1
	MESSAGE	POWER SWING REV REACH: 50.00 Ω	Range: 0.10 to 500.00 ohms in steps of 0.01
	MESSAGE	POWER SWING QUAD REV REACH MID: 60.00 Ω	Range: 0.10 to 500.00 ohms in steps of 0.01
	MESSAGE	POWER SWING QUAD REV REACH OUT: 70.00 Ω	Range: 0.10 to 500.00 ohms in steps of 0.01
	MESSAGE	POWER SWING REV RCA: 75°	Range: 40 to 90° in steps of 1
	MESSAGE	POWER SWING OUTER LIMIT ANGLE: 120°	Range: 40 to 140° in steps of 1
	MESSAGE	POWER SWING MIDDLE LIMIT ANGLE: 90°	Range: 40 to 140° in steps of 1
	MESSAGE	POWER SWING INNER LIMIT ANGLE: 60°	Range: 40 to 140° in steps of 1
	MESSAGE	POWER SWING OUTER RGT BLD: 100.00 Ω	Range: 0.10 to 500.00 ohms in steps of 0.01
	MESSAGE	POWER SWING OUTER LFT BLD: 100.00 Ω	Range: 0.10 to 500.00 ohms in steps of 0.01
	MESSAGE	POWER SWING MIDDLE RGT BLD: 100.00 Ω	Range: 0.10 to 500.00 ohms in steps of 0.01

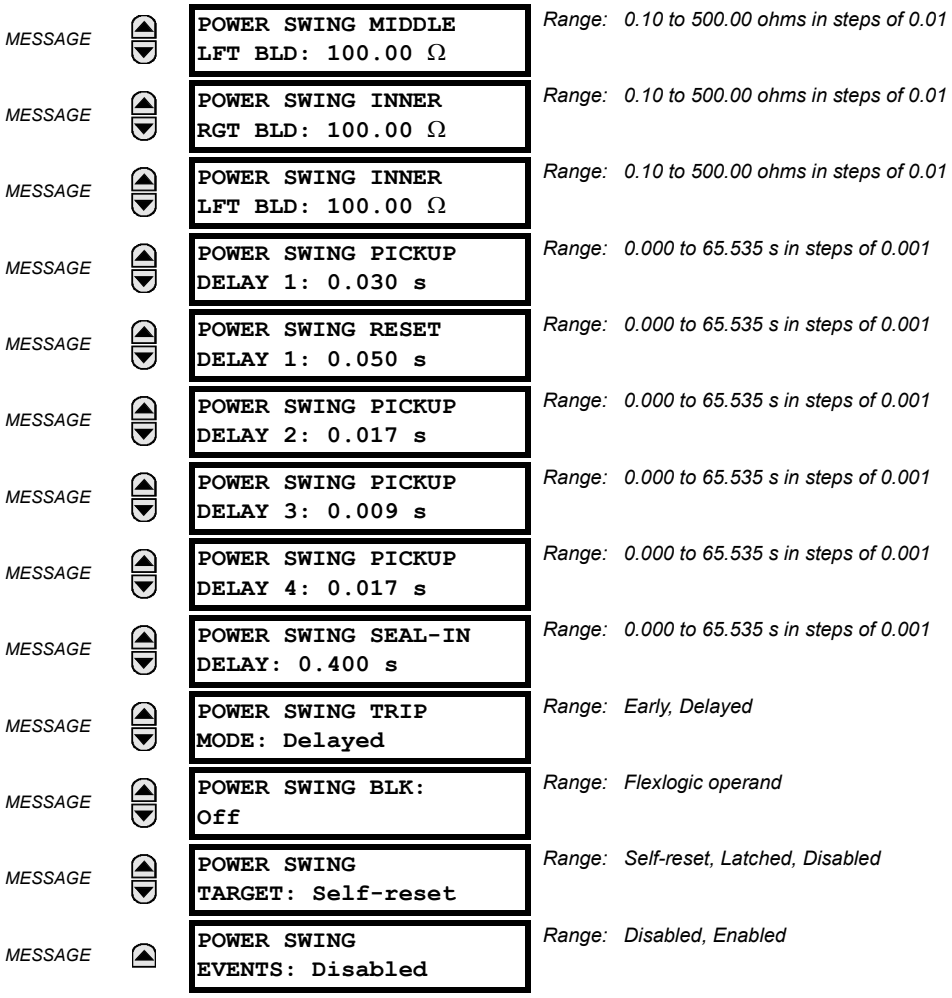

The power swing detect element provides both power swing blocking and out-of-step tripping functions. The element measures the positive-sequence apparent impedance and traces its locus with respect to either two or three user-selectable operating characteristic boundaries. Upon detecting appropriate timing relations, the blocking and tripping indications are given through FlexLogic operands. The element incorporates an adaptive disturbance detector. This function does not trigger on power swings, but is capable of detecting faster disturbances – faults in particular – that may occur during power swings. Operation of this dedicated disturbance detector is signaled via the POWER SWING 50DD operand.

The power swing detect element asserts two outputs intended for blocking selected protection elements on power swings: POWER SWING BLOCK is a traditional signal that is safely asserted for the entire duration of the power swing, and POWER SWING UN/BLOCK is established in the same way, but resets when an extra disturbance is detected during the power swing. The POWER SWING UN/BLOCK operand may be used for blocking selected protection elements if the intent is to respond to faults during power swing conditions.

Different protection elements respond differently to power swings. If tripping is required for faults during power swing conditions, some elements may be blocked permanently (using the POWER SWING BLOCK operand), and others may be blocked and dynamically unblocked upon fault detection (using the POWER SWING UN/BLOCK operand).

View the operating characteristic and logic figures along with the following discussion to develop an understanding of the operation of the element.

The power swing detect element operates in three-step or two-step mode:

- **Three-step operation:** The power swing blocking sequence essentially times the passage of the locus of the positive-sequence impedance between the outer and the middle characteristic boundaries. If the locus enters the outer characteristic (indicated by the POWER SWING OUTER FlexLogic operand) but stays outside the middle characteristic (indicated by the POWER SWING MIDDLE FlexLogic operand) for an interval longer than **POWER SWING PICKUP DELAY 1**, the

power swing blocking signal (POWER SWING BLOCK FlexLogic operand) is established and sealed-in. The blocking signal resets when the locus leaves the outer characteristic, but not sooner than the **POWER SWING RESET DELAY 1** time.

- **Two-step operation:** If the two-step mode is selected, the sequence is identical, but it is the outer and inner characteristics that are used to time the power swing locus.

The out-of-step tripping feature operates as follows for three-step and two-step power swing detection modes:

- **Three-step operation:** The out-of-step trip sequence identifies unstable power swings by determining if the impedance locus spends a finite time between the outer and middle characteristics and then a finite time between the middle and inner characteristics. The first step is similar to the power swing blocking sequence. After timer **POWER SWING PICKUP DELAY 1** times out, latch 1 is set as long as the impedance stays within the outer characteristic.

  If afterwards, at any time (given the impedance stays within the outer characteristic), the locus enters the middle characteristic but stays outside the inner characteristic for a period of time defined as **POWER SWING PICKUP DELAY 2**, latch 2 is set as long as the impedance stays inside the outer characteristic. If afterwards, at any time (given the impedance stays within the outer characteristic), the locus enters the inner characteristic and stays there for a period of time defined as **POWER SWING PICKUP DELAY 3**, latch 2 is set as long as the impedance stays inside the outer characteristic; the element is now ready to trip.

  If the "Early" trip mode is selected, the POWER SWING TRIP operand is set immediately and sealed-in for the interval set by the **POWER SWING SEAL-IN DELAY**. If the "Delayed" trip mode is selected, the element waits until the impedance locus leaves the inner characteristic, then times out the **POWER SWING PICKUP DELAY 2** and sets Latch 4; the element is now ready to trip. The trip operand is set later, when the impedance locus leaves the outer characteristic.

- **Two-step operation:** The two-step mode of operation is similar to the three-step mode with two exceptions. First, the initial stage monitors the time spent by the impedance locus between the outer and inner characteristics. Second, the stage involving the **POWER SWING PICKUP DELAY 2** timer is bypassed. It is up to the user to integrate the blocking (POWER SWING BLOCK) and tripping (POWER SWING TRIP) FlexLogic operands with other protection functions and output contacts in order to make this element fully operational.

The element can be set to use either lens (mho) or rectangular (quadrilateral) characteristics as illustrated below. When set to “Mho”, the element applies the right and left blinders as well. If the blinders are not required, their settings should be set high enough to effectively disable the blinders.

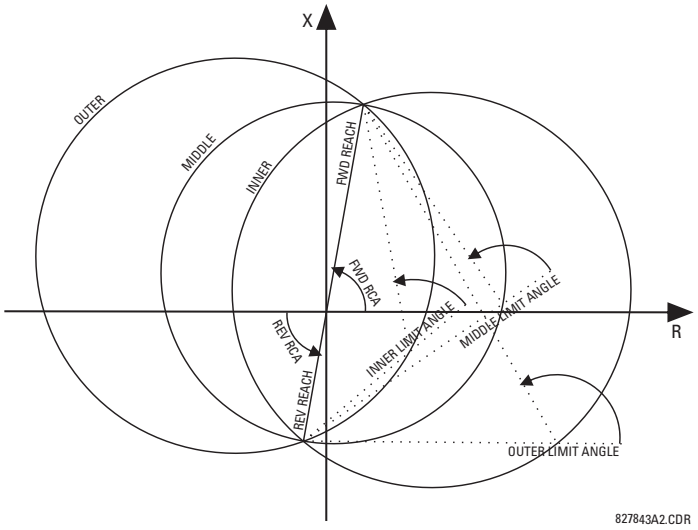

Figure 5–74: POWER SWING DETECT MHO OPERATING CHARACTERISTICS

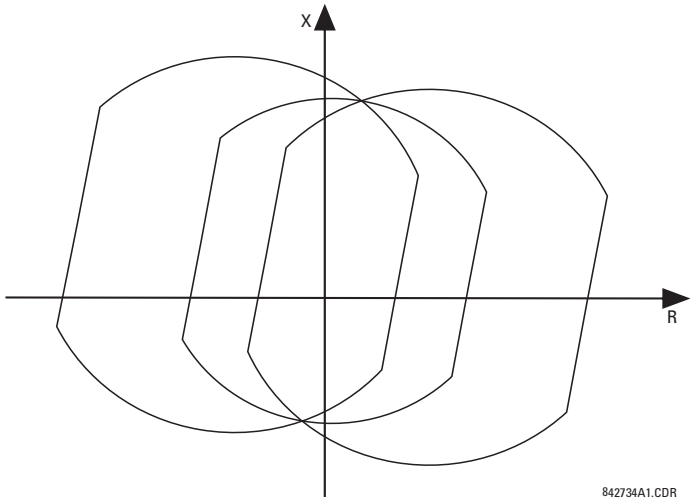

Figure 5–75: EFFECTS OF BLINDERS ON THE MHO CHARACTERISTICS

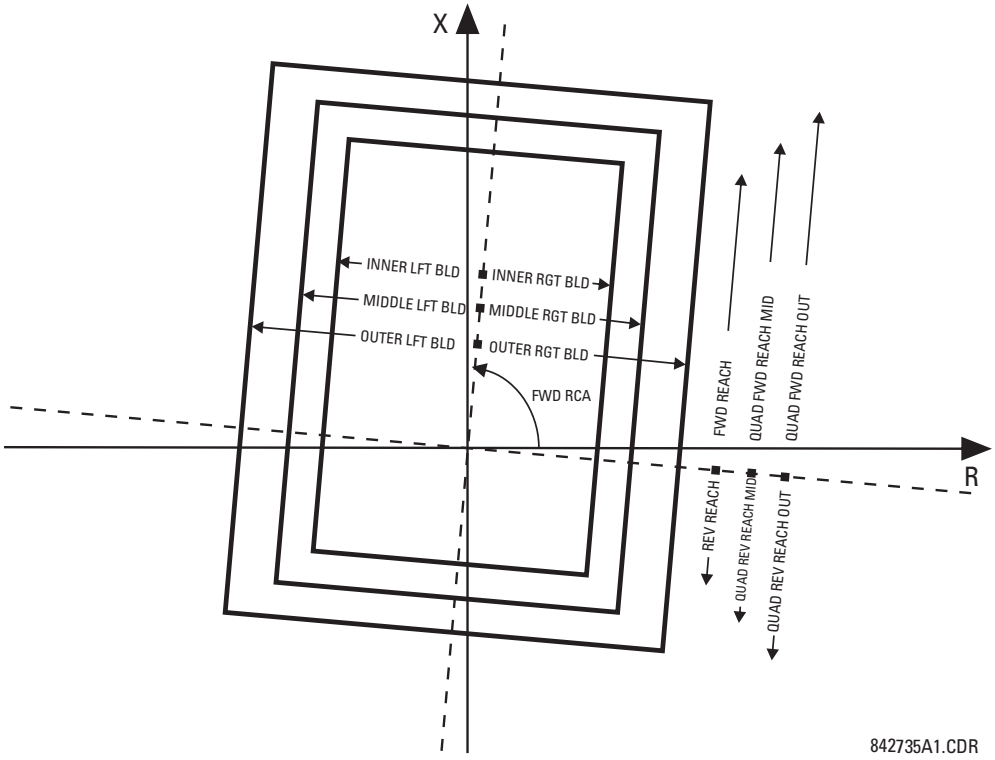

Figure 5–76: POWER SWING DETECT QUADRILATERAL OPERATING CHARACTERISTICS

The FlexLogic output operands for the power swing detect element are described below:

- The POWER SWING OUTER, POWER SWING MIDDLE, POWER SWING INNER, POWER SWING TMR2 PKP, POWER SWING TMR3 PKP, and POWER SWING TMR4 PKP FlexLogic operands are auxiliary operands that could be used to facilitate testing and special applications.
- The POWER SWING BLOCK FlexLogic operand shall be used to block selected protection elements such as distance functions.

- The POWER SWING UN/BLOCK FlexLogic operand shall be used to block those protection elements that are intended to be blocked under power swings, but subsequently unblocked should a fault occur after the power swing blocking condition has been established.
- The POWER SWING 50DD FlexLogic operand indicates that an adaptive disturbance detector integrated with the element has picked up. This operand will trigger on faults occurring during power swing conditions. This includes both three-phase and single-pole-open conditions.
- The POWER SWING INCOMING FlexLogic operand indicates an unstable power swing with an incoming locus (the locus enters the inner characteristic).
- The POWER SWING OUTGOING FlexLogic operand indicates an unstable power swing with an outgoing locus (the locus leaving the outer characteristic). This operand can be used to count unstable swings and take certain action only after pre-defined number of unstable power swings.
- The POWER SWING TRIP FlexLogic operand is a trip command.

The settings for the power swing detect element are described below:

- **POWER SWING FUNCTION:** This setting enables and disables the entire power swing detection element. The setting applies to both power swing blocking and out-of-step tripping functions.
- **POWER SWING SOURCE:** The source setting identifies the signal source for both blocking and tripping functions.
- **POWER SWING SHAPE**: This setting selects the shapes (either “Mho” or “Quad”) of the outer, middle and, inner characteristics of the power swing detect element. The operating principle is not affected. The “Mho” characteristics use the left and right blinders.
- **POWER SWING MODE:** This setting selects between the two-step and three-step operating modes and applies to both power swing blocking and out-of-step tripping functions. The three-step mode applies if there is enough space between the maximum load impedances and distance characteristics of the relay that all three (outer, middle, and inner) characteristics can be placed between the load and the distance characteristics. Whether the spans between the outer and middle as well as the middle and inner characteristics are sufficient should be determined by analysis of the fastest power swings expected in correlation with settings of the power swing timers.

  The two-step mode uses only the outer and inner characteristics for both blocking and tripping functions. This leaves more space in heavily loaded systems to place two power swing characteristics between the distance characteristics and the maximum load, but allows for only one determination of the impedance trajectory.
- **POWER SWING SUPV:** A common overcurrent pickup level supervises all three power swing characteristics. The supervision responds to the positive sequence current.
- **POWER SW I2 SUPV ENAB:** This setting is to enable I2 supervision logic through a FlexLogic operand, which is used to detect the presence of significant unbalance in current signals, such as during fault conditions. Under these conditions, POWER SWING BLOCK operand is not asserted.
- **POWER SWING I2 SUPV:** This setting specifies the threshold of the I2 supervision logic.
- **POWER SWING FWD REACH:** This setting specifies the forward reach of all three mho characteristics and the inner quadrilateral characteristic. For a simple system consisting of a line and two equivalent sources, this reach should be higher than the sum of the line and remote source positive-sequence impedances. Detailed transient stability studies may be needed for complex systems in order to determine this setting. The angle of this reach impedance is specified by the **POWER SWING FWD RCA** setting.
- **POWER SWING QUAD FWD REACH MID**: This setting specifies the forward reach of the middle quadrilateral characteristic. The angle of this reach impedance is specified by the **POWER SWING FWD RCA** setting. The setting is not used if the shape setting is “Mho”.
- **POWER SWING QUAD FWD REACH OUT**: This setting specifies the forward reach of the outer quadrilateral characteristic. The angle of this reach impedance is specified by the **POWER SWING FWD RCA** setting. The setting is not used if the shape setting is “Mho”.
- **POWER SWING FWD RCA:** This setting specifies the angle of the forward reach impedance for the mho characteristics, angles of all the blinders, and both forward and reverse reach impedances of the quadrilateral characteristics.
- **POWER SWING REV REACH:** This setting specifies the reverse reach of all three mho characteristics and the inner quadrilateral characteristic. For a simple system of a line and two equivalent sources, this reach should be higher than the positive-sequence impedance of the local source. Detailed transient stability studies may be needed for complex

systems to determine this setting. The angle of this reach impedance is specified by the **POWER SWING REV RCA** setting for “Mho”, and the **POWER SWING FWD RCA** setting for “Quad”.

- **POWER SWING QUAD REV REACH MID**: This setting specifies the reverse reach of the middle quadrilateral characteristic. The angle of this reach impedance is specified by the **POWER SWING FWD RCA** setting. The setting is not used if the shape setting is “Mho”.
- **POWER SWING QUAD REV REACH OUT**: This setting specifies the reverse reach of the outer quadrilateral characteristic. The angle of this reach impedance is specified by the **POWER SWING FWD RCA** setting. The setting is not used if the shape setting is “Mho”.
- **POWER SWING REV RCA:** This setting specifies the angle of the reverse reach impedance for the mho characteristics. This setting applies to mho shapes only.
- **POWER SWING OUTER LIMIT ANGLE:** This setting defines the outer power swing characteristic. The convention depicted in the *Power swing detect characteristic* diagram should be observed: values greater than 90° result in an apple-shaped characteristic; values less than 90° result in a lens shaped characteristic. This angle must be selected in consideration of the maximum expected load. If the maximum load angle is known, the outer limit angle should be coordinated with a 20° security margin. Detailed studies may be needed for complex systems to determine this setting. This setting applies to mho shapes only.
- **POWER SWING MIDDLE LIMIT ANGLE:** This setting defines the middle power swing detect characteristic. It is relevant only for the 3-step mode. A typical value would be close to the average of the outer and inner limit angles. This setting applies to mho shapes only.
- **POWER SWING INNER LIMIT ANGLE:** This setting defines the inner power swing detect characteristic. The inner characteristic is used by the out-of-step tripping function: beyond the inner characteristic out-of-step trip action is definite (the actual trip may be delayed as per the **TRIP MODE** setting). Therefore, this angle must be selected in consideration to the power swing angle beyond which the system becomes unstable and cannot recover.

  The inner characteristic is also used by the power swing blocking function in the two-step mode. In this case, set this angle large enough so that the characteristics of the distance elements are safely enclosed by the inner characteristic. This setting applies to mho shapes only.
- **POWER SWING OUTER**, **MIDDLE**, and **INNER RGT BLD**: These settings specify the resistive reach of the right blinder. The blinder applies to both “Mho” and “Quad” characteristics. Set these value high if no blinder is required for the “Mho” characteristic.
- **POWER SWING OUTER**, **MIDDLE**, and **INNER LFT BLD**: These settings specify the resistive reach of the left blinder. Enter a positive value; the relay automatically uses a negative value. The blinder applies to both “Mho” and “Quad” characteristics. Set this value high if no blinder is required for the “Mho” characteristic.
- **POWER SWING PICKUP DELAY 1:** All the coordinating timers are related to each other and should be set to detect the fastest expected power swing and produce out-of-step tripping in a secure manner. The timers should be set in consideration to the power swing detect characteristics, mode of power swing detect operation and mode of out-of-step tripping. This timer defines the interval that the impedance locus must spend between the outer and inner characteristics (two-step operating mode), or between the outer and middle characteristics (three-step operating mode) before the power swing blocking signal is established. This time delay must be set shorter than the time required for the impedance locus to travel between the two selected characteristics during the fastest expected power swing. This setting is relevant for both power swing blocking and out-of-step tripping.
- **POWER SWING RESET DELAY 1:** This setting defines the dropout delay for the power swing blocking signal. Detection of a condition requiring a block output sets latch 1 after **PICKUP DELAY 1** time. When the impedance locus leaves the outer characteristic, timer **POWER SWING RESET DELAY 1** is started. When the timer times-out the latch is reset. This setting should be selected to give extra security for the power swing blocking action.
- **POWER SWING PICKUP DELAY 2:** Controls the out-of-step tripping function in the three-step mode only. This timer defines the interval the impedance locus must spend between the middle and inner characteristics before the second step of the out-of-step tripping sequence is completed. This time delay must be set shorter than the time required for the impedance locus to travel between the two characteristics during the fastest expected power swing.
- **POWER SWING PICKUP DELAY 3:** Controls the out-of-step tripping function only. It defines the interval the impedance locus must spend within the inner characteristic before the last step of the out-of-step tripping sequence is completed and the element is armed to trip. The actual moment of tripping is controlled by the **TRIP MODE** setting. This time delay is provided for extra security before the out-of-step trip action is executed.

- **POWER SWING PICKUP DELAY 4:** Controls the out-of-step tripping function in “Delayed” trip mode only. This timer defines the interval the impedance locus must spend outside the inner characteristic but within the outer characteristic before the element is armed for the delayed trip. The delayed trip occurs when the impedance leaves the outer characteristic. This time delay is provided for extra security and should be set considering the fastest expected power swing.
- **POWER SWING SEAL-IN DELAY:** The out-of-step trip FlexLogic operand (POWER SWING TRIP) is sealed-in for the specified period of time. The sealing-in is crucial in the delayed trip mode, as the original trip signal is a very short pulse occurring when the impedance locus leaves the outer characteristic after the out-of-step sequence is completed.
- **POWER SWING TRIP MODE:** Selection of the “Early” trip mode results in an instantaneous trip after the last step in the out-of-step tripping sequence is completed. The early trip mode will stress the circuit breakers as the currents at that moment are high (the electromotive forces of the two equivalent systems are approximately 180° apart). Selection of the “Delayed” trip mode results in a trip at the moment when the impedance locus leaves the outer characteristic. delayed trip mode will relax the operating conditions for the breakers as the currents at that moment are low. The selection should be made considering the capability of the breakers in the system.
- **POWER SWING BLK:** This setting specifies the FlexLogic operand used for blocking the out-of-step function only. The power swing blocking function is operational all the time as long as the element is enabled. The blocking signal resets the output POWER SWING TRIP operand but does not stop the out-of-step tripping sequence.

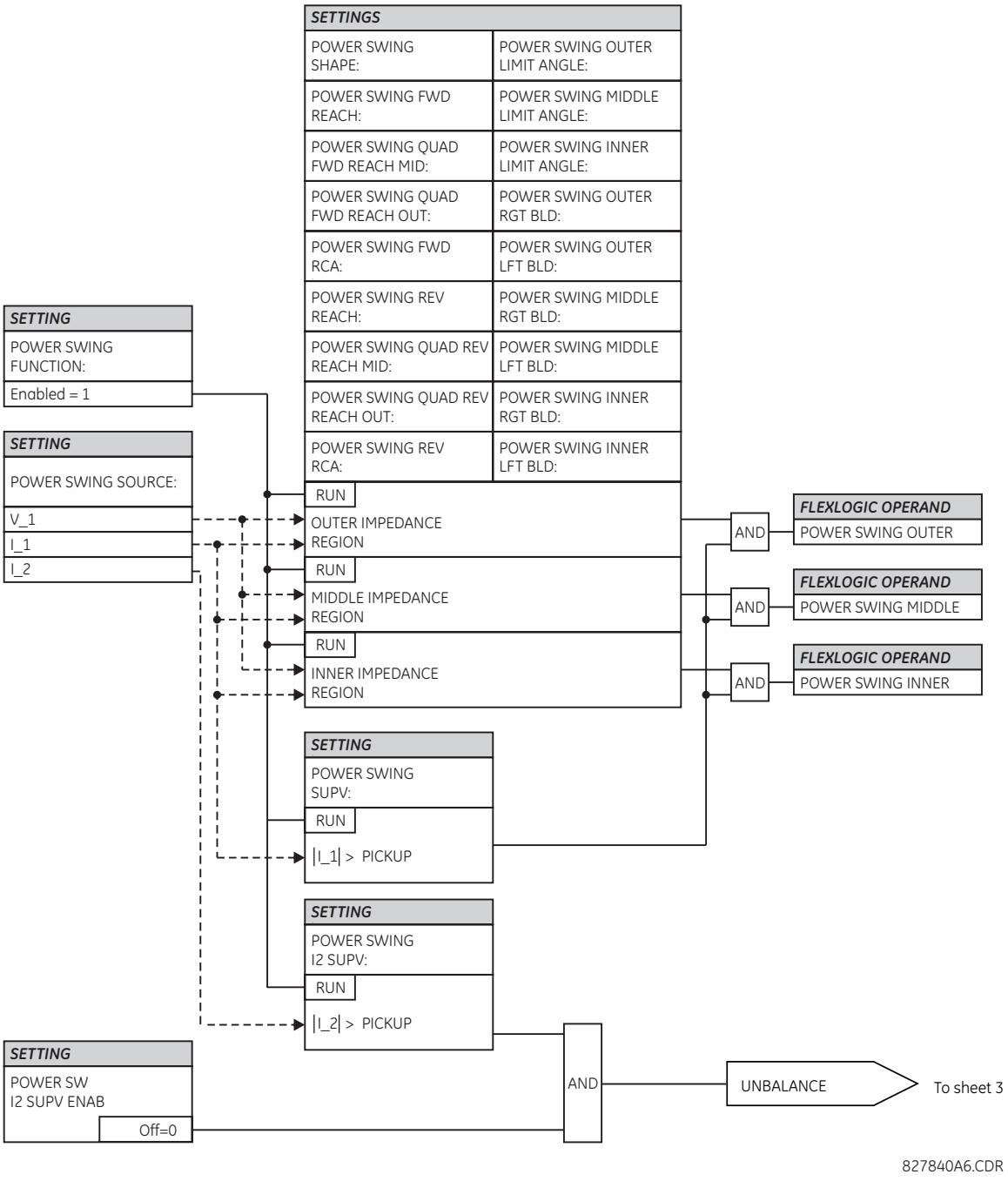

Figure 5–77: POWER SWING DETECT SCHEME LOGIC (1 of 3)

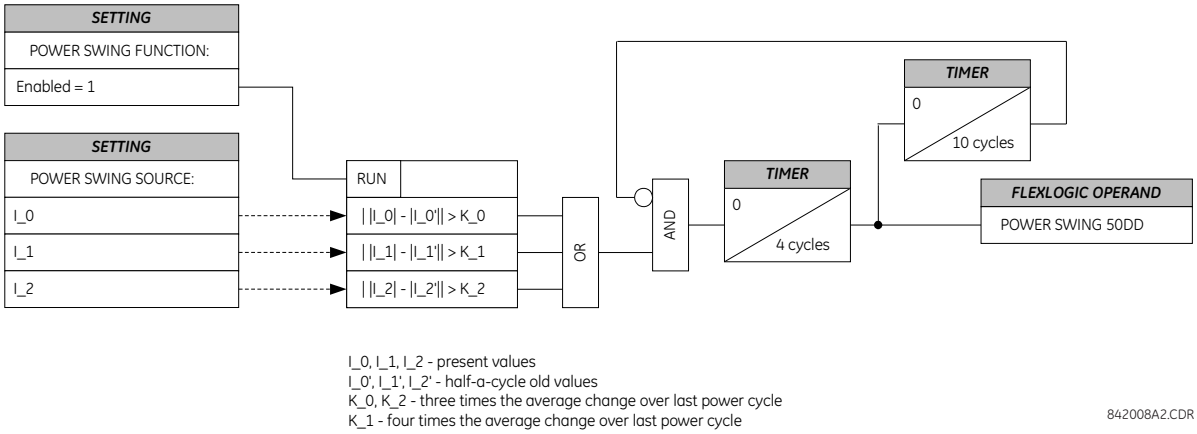

Figure 5–78: POWER SWING DETECT SCHEME LOGIC (2 of 3)

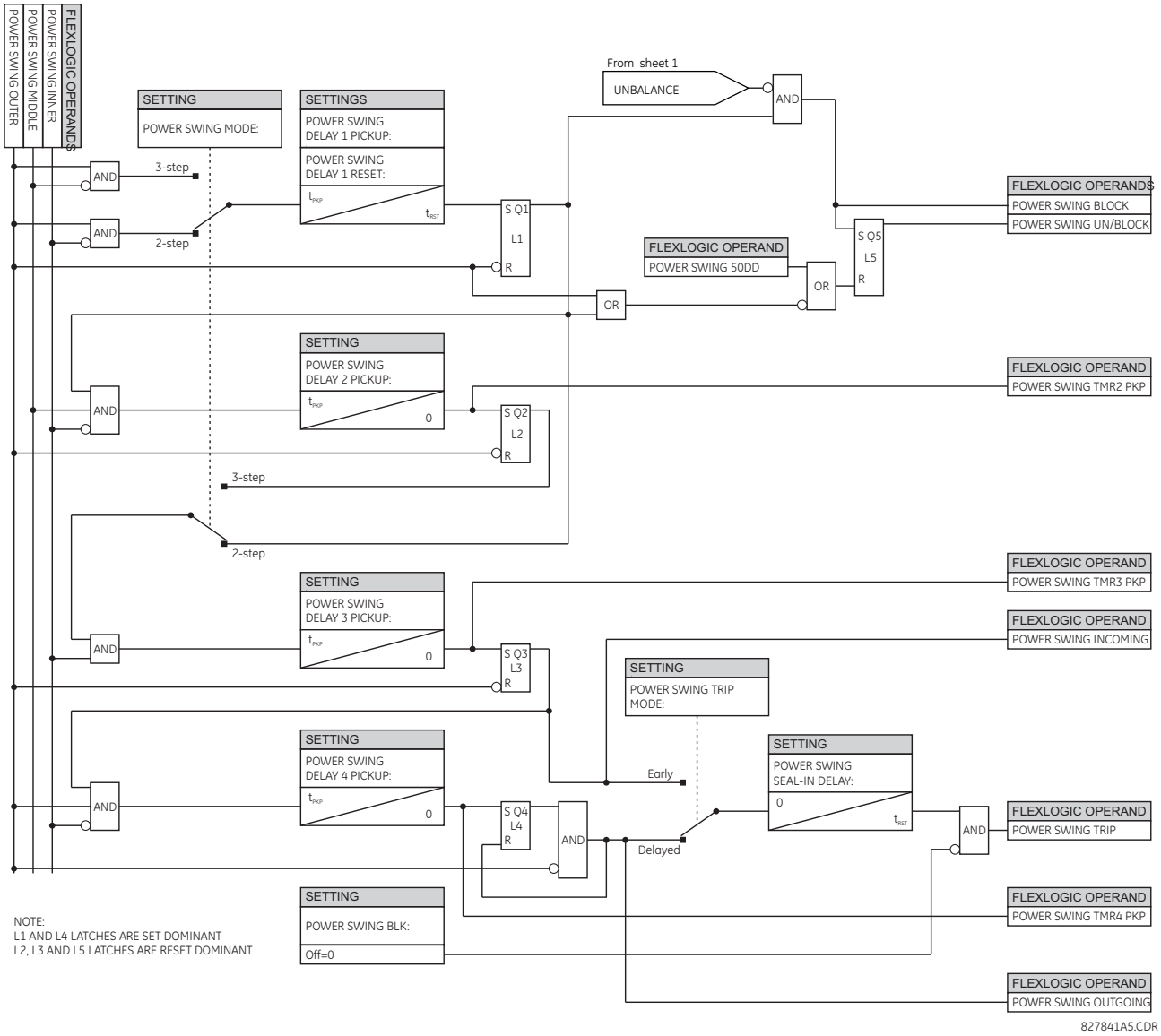

Figure 5–79: POWER SWING DETECT SCHEME LOGIC (3 of 3)

PATH: SETTINGS ⇨⇩ GROUPED ELEMENTS ⇨ SETTING GROUP 1(6) ⇨⇩ STATOR DIFFERENTIAL

■ STATOR ■ DIFFERENTIAL		STATOR DIFF FUNCTION: Disabled
	MESSAGE	STATOR DIFF LINE END SOURCE: SRC 1
	MESSAGE	STATOR DIFF NEUTRAL END SOURCE: SRC 1
	MESSAGE	STATOR DIFF PICKUP: 0.100 pu
	MESSAGE	STATOR DIFF SLOPE 1: 10 %
	MESSAGE	STATOR DIFF BREAK 1: 1.15 pu
	MESSAGE	STATOR DIFF SLOPE 2: 80 %
	MESSAGE	STATOR DIFF BREAK 2: 8.00 pu
	MESSAGE	STATOR DIFF BLOCK: Off
	MESSAGE	STATOR DIFF TARGET: Self-reset
	MESSAGE	STATOR DIFF EVENTS: Disabled

Range: Disabled, Enabled
Range: SRC 1, SRC 2, SRC 3, SRC 4
Range: SRC 1, SRC 2, SRC 3, SRC 4
Range: 0.050 to 1.000 pu in steps of 0.001
Range: 1 to 100% in steps of 1
Range: 1.00 to 1.50 pu in steps of 0.01
Range: 1 to 100% in steps of 1
Range: 1.50 to 30.00 pu in steps of 0.01
Range: FlexLogic operand
Range: Self-reset, Latched, Disabled
Range: Disabled, Enabled

The stator differential protection element is intended for use on the stator windings of rotating machinery.

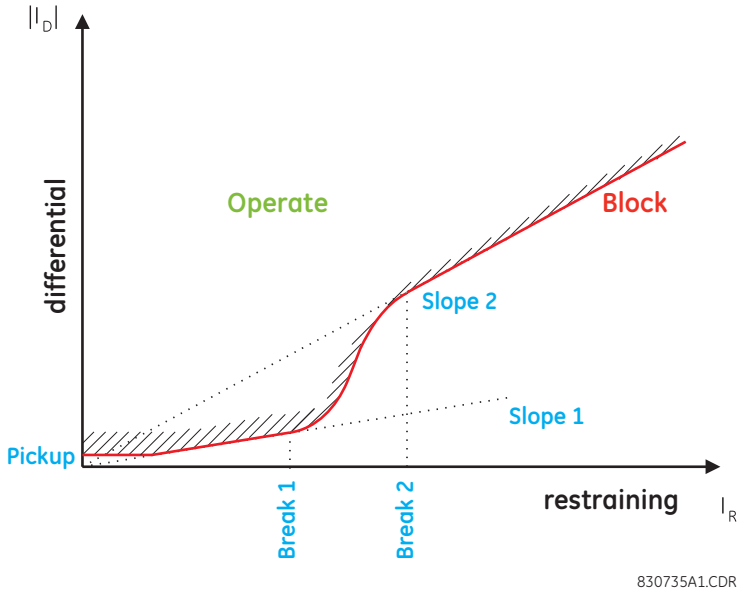

Figure 5–80: STATOR DIFFERENTIAL CHARACTERISTIC

This element has a dual slope characteristic. The main purpose of the percent-slope characteristic is to prevent a maloperation caused by unbalances between CTs during external faults. CT unbalances arise as a result of the following factors:

1. CT accuracy errors
2. CT saturation

The characteristic allows for very sensitive settings when fault current is low and less sensitive settings when fault current is high and CT performance may produce incorrect operate signals.

- **STATOR DIFF LINE END SOURCE:** This setting selects the source connected to CTs in the end of the machine stator winding closest to the load and furthest from the winding neutral point. Both line and neutral-side CTs should be wired to measure their currents in the same direction with respect to the neutral point of the winding.
- **STATOR DIFF NEUTRAL END SOURCE:** This setting selects the source connected to CTs in the end of the machine stator winding furthest from the load and closest to the winding neutral point. Both line and neutral-side CTs should be wired to measure their currents in the same direction with respect to the neutral point of the winding.
- **STATOR DIFF PICKUP:** This setting defines the minimum differential current required for operation. This setting is based on the amount of differential current that might be seen under normal operating conditions. A setting of 0.1 to 0.3 pu is generally recommended.
- **STATOR DIFF SLOPE 1:** This setting is applicable for restraint currents from zero to **STATOR DIFF BREAK 1**, and defines the ratio of differential to restraint current above which the element will operate. This slope is set to ensure sensitivity to internal faults at normal operating current levels. The criteria for setting this slope is to allow for maximum expected CT mismatch error when operating at the maximum permitted current. This maximum error is generally in the range of 5 to 10% of CT rating.
- **STATOR DIFF BREAK 1:** This setting defines the end of the Slope 1 region and the start of the transition region. It should be set just above the maximum normal operating current level of the machine.
- **STATOR DIFF SLOPE 2:** This setting is applicable for restraint currents above the **STATOR DIFF BREAK 2** setting when the element is applied to generator stator windings. This slope is set to ensure stability under heavy external fault conditions that could lead to high differential currents as a result of CT saturation. A setting of 80 to 100% is recommended. The transition region (as shown on the characteristic plot) is a cubic spline, automatically calculated by the relay to result in a smooth transition between **STATOR DIFF SLOPE 1** and **STATOR DIFF SLOPE 2** with no discontinuities.
- **STATOR DIFF BREAK 2:** This setting defines the end of the transition region and the start of the Slope 2 region. It should be set to the level at which any of the protection CTs are expected to begin to saturate.

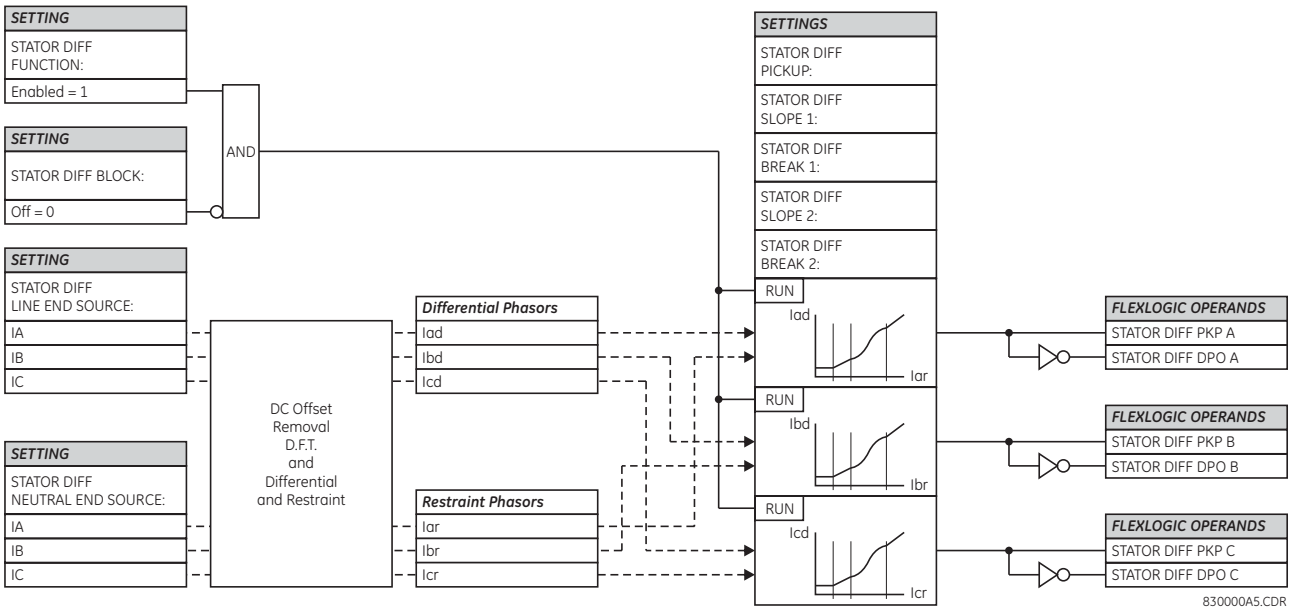

Figure 5–81: STATOR DIFFERENTIAL SCHEME LOGIC

SATURATION DETECTION:

External faults near generators typically result in very large time constants of DC components in the fault currents. Also, when energizing a step-up transformer, the inrush current being limited only by the machine impedance may be significant and may last for a very long time. In order to provide additional security against maloperations during these events, the G60 incorporates saturation detection logic. When saturation is detected the element will make an additional check on the angle between the neutral and output current. If this angle indicates an internal fault then tripping is permitted.

The saturation detector is implemented as a state machine (see below). "NORMAL" is the initial state of the machine. When in "NORMAL" state, the saturation flag is not set (SAT = 0). The algorithm calculates the saturation condition, SC. If SC = 1 while the state machine is "NORMAL", the saturation detector goes into the "EXTERNAL FAULT" state and sets the saturation flag (SAT = 1). The algorithm returns to the "NORMAL" state if the differential current is below the first slope, SL, for more than 200 ms. When in the "EXTERNAL FAULT" state, the algorithm goes into the "EXTERNAL FAULT & CT SATURATION" state if the differential flag is set (DIF = 1). When in the "EXTERNAL FAULT & CT SATURATION" state, the algorithm keeps the saturation flag set (SAT = 1). The state machine returns to the "EXTERNAL FAULT" state if the differential flag is reset (DIF = 0) for 100 ms.

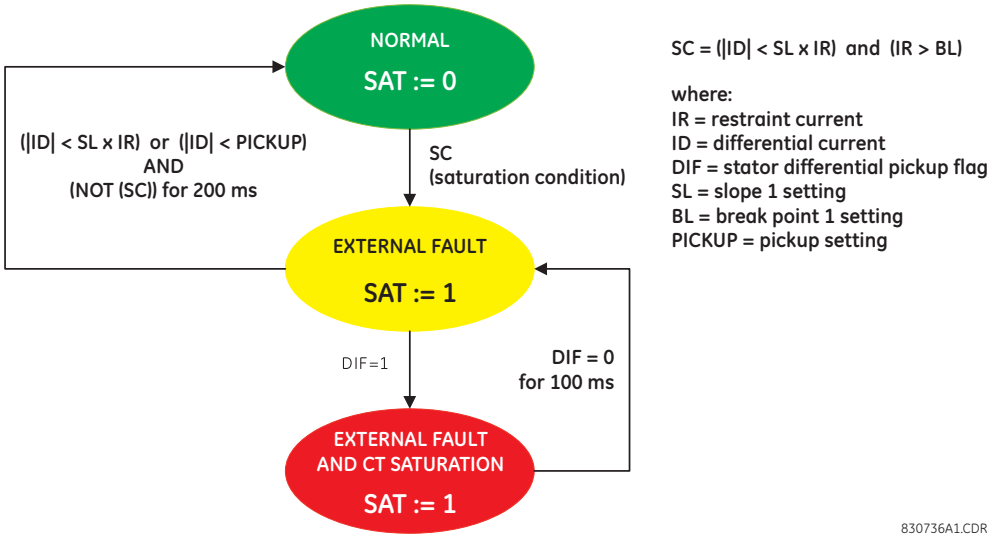

Figure 5–82: SATURATION DETECTION STATE MACHINE

PHASE COMPARISON PRINCIPLE:

The test for direction can be summarized by the following equation:

$$\text{If } (|I_{TS}| > B_L \text{ or } (|I_{TS}| > K \times I_R \text{ and } |I_{TS}| > 0.1 \text{ pu})) \text{ and } (|I_{NS}| > B_L \text{ or } (|I_{NS}| > K \times I_R \text{ and } |I_{NS}| > 0.1 \text{ pu})) \quad \textbf{(EQ 5.7)}$$

Then

If abs ($\angle I_{TS} - \angle I_{NS}$) > 90°, DIR = 1

Otherwise DIR = 0

else DIR = 1

meaning that if there are fault current contributors from both terminal and neutral sides, angles between currents are checked. If there is just one contributor, angles are not checked and phase comparison check is bypassed (DIR=1).

where

I_R = restraining current, *DIR* = flag indicating that the phase comparison principle is satisfied
B_L = breakpoint 1 setting, I_{TS}, I_{NS} = current at the terminal and neutral sources, respectively
K = factory constant of 0.25

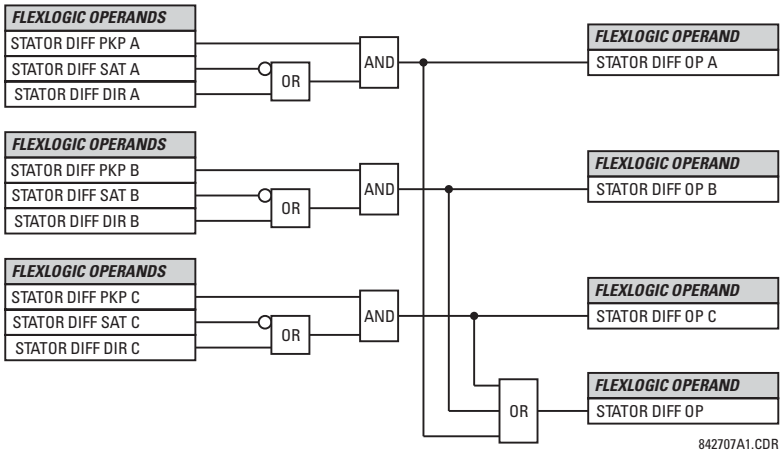

Figure 5–83: STATOR DIFFERENTIAL FINAL OUTPUT LOGIC

5.6.6 PHASE CURRENT

a) MAIN MENU

PATH: SETTINGS ⇩ GROUPED ELEMENTS ⇨ SETTING GROUP 1(6) ⇨⇩ PHASE CURRENT

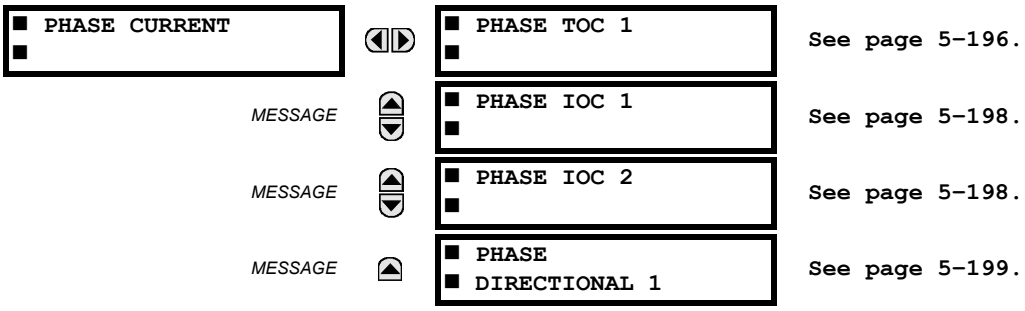

b) INVERSE TIME OVERCURRENT CHARACTERISTICS

The inverse time overcurrent curves used by the time overcurrent elements are the IEEE, IEC, GE Type IAC, and I^2t standard curve shapes. This allows for simplified coordination with downstream devices.

If none of these curve shapes is adequate, FlexCurves may be used to customize the inverse time curve characteristics. The definite time curve is also an option that may be appropriate if only simple protection is required.

Table 5–23: OVERCURRENT CURVE TYPES

IEEE	IEC	GE TYPE IAC	OTHER
IEEE Extremely Inverse	IEC Curve A (BS142)	IAC Extremely Inverse	I^2t
IEEE Very Inverse	IEC Curve B (BS142)	IAC Very Inverse	FlexCurves A, B, C, and D
IEEE Moderately Inverse	IEC Curve C (BS142)	IAC Inverse	Recloser Curves
	IEC Short Inverse	IAC Short Inverse	Definite Time

A time dial multiplier setting allows selection of a multiple of the base curve shape (where the time dial multiplier = 1) with the curve shape (**CURVE**) setting. Unlike the electromechanical time dial equivalent, operate times are directly proportional to the time multiplier (**TD MULTIPLIER**) setting value. For example, all times for a multiplier of 10 are 10 times the multiplier 1 or base curve values. Setting the multiplier to zero results in an instantaneous response to all current levels above pickup.

Time overcurrent time calculations are made with an internal *energy capacity* memory variable. When this variable indicates that the energy capacity has reached 100%, a time overcurrent element will operate. If less than 100% energy capacity is accumulated in this variable and the current falls below the dropout threshold of 97 to 98% of the pickup value, the

variable must be reduced. Two methods of this resetting operation are available: “Instantaneous” and “Timed”. The “Instantaneous” selection is intended for applications with other relays, such as most static relays, which set the energy capacity directly to zero when the current falls below the reset threshold. The “Timed” selection can be used where the relay must coordinate with electromechanical relays.

The URs calculate operate time corresponding to the values in the range of 1.03 to 20 multiples of the pickup current. Above 20 multiples of the pickup current, URs clamp the operate time to the value at a multiple of 20, resulting in the flat part of the characteristics. Reset time is calculated in the range of 0 to 0.97 multiples of the pickup current.

IEEE CURVES

The IEEE time overcurrent curve shapes conform to industry standards and the IEEE C37.112-1996 curve classifications for extremely, very, and moderately inverse. The IEEE curves are derived from the formulae:

$$T = TDM \times \left[\frac{A}{\left(\frac{I}{I_{pickup}} \right)^{p} - 1} + B \right], \; T_{RESET} = TDM \times \left[\frac{t_r}{1 - \left(\frac{I}{I_{pickup}} \right)^{2}} \right] \quad \textbf{(EQ 5.8)}$$

where: T = operate time (in seconds), TDM = Multiplier setting, I = input current, I_{pickup} = Pickup Current setting A, B, p = constants, T_{RESET} = reset time in seconds (assuming energy capacity is 100% and **RESET** is “Timed”), t_r = characteristic constant

Table 5–24: IEEE INVERSE TIME CURVE CONSTANTS

IEEE CURVE SHAPE	A	B	P	T_R
IEEE Extremely Inverse	28.2	0.1217	2.0000	29.1
IEEE Very Inverse	19.61	0.491	2.0000	21.6
IEEE Moderately Inverse	0.0515	0.1140	0.02000	4.85

Table 5–25: IEEE CURVE TRIP TIMES (IN SECONDS)

MULTIPLIER (TDM)	CURRENT (I / I_{pickup})									
	1.5	2.0	3.0	4.0	5.0	6.0	7.0	8.0	9.0	10.0
IEEE EXTREMELY INVERSE										
0.5	11.341	4.761	1.823	1.001	0.648	0.464	0.355	0.285	0.237	0.203
1.0	22.682	9.522	3.647	2.002	1.297	0.927	0.709	0.569	0.474	0.407
2.0	45.363	19.043	7.293	4.003	2.593	1.855	1.418	1.139	0.948	0.813
4.0	90.727	38.087	14.587	8.007	5.187	3.710	2.837	2.277	1.897	1.626
6.0	136.090	57.130	21.880	12.010	7.780	5.564	4.255	3.416	2.845	2.439
8.0	181.454	76.174	29.174	16.014	10.374	7.419	5.674	4.555	3.794	3.252
10.0	226.817	95.217	36.467	20.017	12.967	9.274	7.092	5.693	4.742	4.065
IEEE VERY INVERSE										
0.5	8.090	3.514	1.471	0.899	0.654	0.526	0.450	0.401	0.368	0.345
1.0	16.179	7.028	2.942	1.798	1.308	1.051	0.900	0.802	0.736	0.689
2.0	32.358	14.055	5.885	3.597	2.616	2.103	1.799	1.605	1.472	1.378
4.0	64.716	28.111	11.769	7.193	5.232	4.205	3.598	3.209	2.945	2.756
6.0	97.074	42.166	17.654	10.790	7.849	6.308	5.397	4.814	4.417	4.134
8.0	129.432	56.221	23.538	14.387	10.465	8.410	7.196	6.418	5.889	5.513
10.0	161.790	70.277	29.423	17.983	13.081	10.513	8.995	8.023	7.361	6.891
IEEE MODERATELY INVERSE										
0.5	3.220	1.902	1.216	0.973	0.844	0.763	0.706	0.663	0.630	0.603
1.0	6.439	3.803	2.432	1.946	1.688	1.526	1.412	1.327	1.260	1.207
2.0	12.878	7.606	4.864	3.892	3.377	3.051	2.823	2.653	2.521	2.414
4.0	25.756	15.213	9.729	7.783	6.753	6.102	5.647	5.307	5.041	4.827
6.0	38.634	22.819	14.593	11.675	10.130	9.153	8.470	7.960	7.562	7.241
8.0	51.512	30.426	19.458	15.567	13.507	12.204	11.294	10.614	10.083	9.654
10.0	64.390	38.032	24.322	19.458	16.883	15.255	14.117	13.267	12.604	12.068

IEC CURVES

For European applications, the relay offers three standard curves defined in IEC 255-4 and British standard BS142. These are defined as IEC Curve A, IEC Curve B, and IEC Curve C. The formulae for these curves are:

$$T = TDM \times \left[\frac{K}{(I/I_{pickup})^{E} - 1} \right], \; T_{RESET} = TDM \times \left[\frac{t_r}{1 - (I/I_{pickup})^{2}} \right] \quad \textbf{(EQ 5.9)}$$

where: T = operate time (in seconds), TDM = Multiplier setting, I = input current, I_{pickup} = Pickup Current setting, K, E = constants, t_r = characteristic constant, and T_{RESET} = reset time in seconds (assuming energy capacity is 100% and **RESET** is "Timed")

Table 5–26: IEC (BS) INVERSE TIME CURVE CONSTANTS

IEC (BS) CURVE SHAPE	K	E	T_R
IEC Curve A (BS142)	0.140	0.020	9.7
IEC Curve B (BS142)	13.500	1.000	43.2
IEC Curve C (BS142)	80.000	2.000	58.2
IEC Short Inverse	0.050	0.040	0.500

Table 5–27: IEC CURVE TRIP TIMES (IN SECONDS)

MULTIPLIER (TDM)	CURRENT (I / I_{pickup})									
	1.5	2.0	3.0	4.0	5.0	6.0	7.0	8.0	9.0	10.0
IEC CURVE A										
0.05	0.860	0.501	0.315	0.249	0.214	0.192	0.176	0.165	0.156	0.149
0.10	1.719	1.003	0.630	0.498	0.428	0.384	0.353	0.330	0.312	0.297
0.20	3.439	2.006	1.260	0.996	0.856	0.767	0.706	0.659	0.623	0.594
0.40	6.878	4.012	2.521	1.992	1.712	1.535	1.411	1.319	1.247	1.188
0.60	10.317	6.017	3.781	2.988	2.568	2.302	2.117	1.978	1.870	1.782
0.80	13.755	8.023	5.042	3.984	3.424	3.070	2.822	2.637	2.493	2.376
1.00	17.194	10.029	6.302	4.980	4.280	3.837	3.528	3.297	3.116	2.971
IEC CURVE B										
0.05	1.350	0.675	0.338	0.225	0.169	0.135	0.113	0.096	0.084	0.075
0.10	2.700	1.350	0.675	0.450	0.338	0.270	0.225	0.193	0.169	0.150
0.20	5.400	2.700	1.350	0.900	0.675	0.540	0.450	0.386	0.338	0.300
0.40	10.800	5.400	2.700	1.800	1.350	1.080	0.900	0.771	0.675	0.600
0.60	16.200	8.100	4.050	2.700	2.025	1.620	1.350	1.157	1.013	0.900
0.80	21.600	10.800	5.400	3.600	2.700	2.160	1.800	1.543	1.350	1.200
1.00	27.000	13.500	6.750	4.500	3.375	2.700	2.250	1.929	1.688	1.500
IEC CURVE C										
0.05	3.200	1.333	0.500	0.267	0.167	0.114	0.083	0.063	0.050	0.040
0.10	6.400	2.667	1.000	0.533	0.333	0.229	0.167	0.127	0.100	0.081
0.20	12.800	5.333	2.000	1.067	0.667	0.457	0.333	0.254	0.200	0.162
0.40	25.600	10.667	4.000	2.133	1.333	0.914	0.667	0.508	0.400	0.323
0.60	38.400	16.000	6.000	3.200	2.000	1.371	1.000	0.762	0.600	0.485
0.80	51.200	21.333	8.000	4.267	2.667	1.829	1.333	1.016	0.800	0.646
1.00	64.000	26.667	10.000	5.333	3.333	2.286	1.667	1.270	1.000	0.808
IEC SHORT TIME										
0.05	0.153	0.089	0.056	0.044	0.038	0.034	0.031	0.029	0.027	0.026
0.10	0.306	0.178	0.111	0.088	0.075	0.067	0.062	0.058	0.054	0.052
0.20	0.612	0.356	0.223	0.175	0.150	0.135	0.124	0.115	0.109	0.104
0.40	1.223	0.711	0.445	0.351	0.301	0.269	0.247	0.231	0.218	0.207
0.60	1.835	1.067	0.668	0.526	0.451	0.404	0.371	0.346	0.327	0.311
0.80	2.446	1.423	0.890	0.702	0.602	0.538	0.494	0.461	0.435	0.415

Table 5–27: IEC CURVE TRIP TIMES (IN SECONDS)

MULTIPLIER (TDM)	CURRENT (I / I_{pickup})									
	1.5	2.0	3.0	4.0	5.0	6.0	7.0	8.0	9.0	10.0
1.00	3.058	1.778	1.113	0.877	0.752	0.673	0.618	0.576	0.544	0.518

IAC CURVES

The curves for the General Electric type IAC relay family are derived from the formulae:

$$T = \text{TDM} \times \left(A + \frac{B}{(I/I_{pkp}) - C} + \frac{D}{((I/I_{pkp}) - C)^2} + \frac{E}{((I/I_{pkp}) - C)^3} \right), \; T_{RESET} = TDM \times \left[\frac{t_r}{1 - (I/I_{pkp})^2} \right] \quad \textbf{(EQ 5.10)}$$

where: T = operate time (in seconds), TDM = Multiplier setting, I = Input current, I_{pkp} = Pickup Current setting, A *to* E = constants, t_r = characteristic constant, and T_{RESET} = reset time in seconds (assuming energy capacity is 100% and **RESET** is "Timed")

Table 5–28: GE TYPE IAC INVERSE TIME CURVE CONSTANTS

IAC CURVE SHAPE	A	B	C	D	E	T_R
IAC Extreme Inverse	0.0040	0.6379	0.6200	1.7872	0.2461	6.008
IAC Very Inverse	0.0900	0.7955	0.1000	–1.2885	7.9586	4.678
IAC Inverse	0.2078	0.8630	0.8000	–0.4180	0.1947	0.990
IAC Short Inverse	0.0428	0.0609	0.6200	–0.0010	0.0221	0.222

Table 5–29: IAC CURVE TRIP TIMES

MULTIPLIER (TDM)	CURRENT (I / I_{pickup})									
	1.5	2.0	3.0	4.0	5.0	6.0	7.0	8.0	9.0	10.0
IAC EXTREMELY INVERSE										
0.5	1.699	0.749	0.303	0.178	0.123	0.093	0.074	0.062	0.053	0.046
1.0	3.398	1.498	0.606	0.356	0.246	0.186	0.149	0.124	0.106	0.093
2.0	6.796	2.997	1.212	0.711	0.491	0.372	0.298	0.248	0.212	0.185
4.0	13.591	5.993	2.423	1.422	0.983	0.744	0.595	0.495	0.424	0.370
6.0	20.387	8.990	3.635	2.133	1.474	1.115	0.893	0.743	0.636	0.556
8.0	27.183	11.987	4.846	2.844	1.966	1.487	1.191	0.991	0.848	0.741
10.0	33.979	14.983	6.058	3.555	2.457	1.859	1.488	1.239	1.060	0.926
IAC VERY INVERSE										
0.5	1.451	0.656	0.269	0.172	0.133	0.113	0.101	0.093	0.087	0.083
1.0	2.901	1.312	0.537	0.343	0.266	0.227	0.202	0.186	0.174	0.165
2.0	5.802	2.624	1.075	0.687	0.533	0.453	0.405	0.372	0.349	0.331
4.0	11.605	5.248	2.150	1.374	1.065	0.906	0.810	0.745	0.698	0.662
6.0	17.407	7.872	3.225	2.061	1.598	1.359	1.215	1.117	1.046	0.992
8.0	23.209	10.497	4.299	2.747	2.131	1.813	1.620	1.490	1.395	1.323
10.0	29.012	13.121	5.374	3.434	2.663	2.266	2.025	1.862	1.744	1.654
IAC INVERSE										
0.5	0.578	0.375	0.266	0.221	0.196	0.180	0.168	0.160	0.154	0.148
1.0	1.155	0.749	0.532	0.443	0.392	0.360	0.337	0.320	0.307	0.297
2.0	2.310	1.499	1.064	0.885	0.784	0.719	0.674	0.640	0.614	0.594
4.0	4.621	2.997	2.128	1.770	1.569	1.439	1.348	1.280	1.229	1.188
6.0	6.931	4.496	3.192	2.656	2.353	2.158	2.022	1.921	1.843	1.781
8.0	9.242	5.995	4.256	3.541	3.138	2.878	2.695	2.561	2.457	2.375
10.0	11.552	7.494	5.320	4.426	3.922	3.597	3.369	3.201	3.072	2.969
IAC SHORT INVERSE										
0.5	0.072	0.047	0.035	0.031	0.028	0.027	0.026	0.026	0.025	0.025

Table 5–29: IAC CURVE TRIP TIMES

MULTIPLIER (TDM)	CURRENT (I / I_{pickup})									
	1.5	2.0	3.0	4.0	5.0	6.0	7.0	8.0	9.0	10.0
1.0	0.143	0.095	0.070	0.061	0.057	0.054	0.052	0.051	0.050	0.049
2.0	0.286	0.190	0.140	0.123	0.114	0.108	0.105	0.102	0.100	0.099
4.0	0.573	0.379	0.279	0.245	0.228	0.217	0.210	0.204	0.200	0.197
6.0	0.859	0.569	0.419	0.368	0.341	0.325	0.314	0.307	0.301	0.296
8.0	1.145	0.759	0.559	0.490	0.455	0.434	0.419	0.409	0.401	0.394
10.0	1.431	0.948	0.699	0.613	0.569	0.542	0.524	0.511	0.501	0.493

I2t CURVES

The curves for the I^2t are derived from the formulae:

$$T = \text{TDM} \times \left[\frac{100}{\left(\frac{I}{I_{pickup}} \right)^2} \right], \quad T_{RESET} = \text{TDM} \times \left[\frac{100}{\left(\frac{I}{I_{pickup}} \right)^{-2}} \right] \qquad \textbf{(EQ 5.11)}$$

where: T = Operate Time (sec.); TDM = Multiplier Setting; I = Input Current; I_{pickup} = Pickup Current Setting; T_{RESET} = Reset Time in sec. (assuming energy capacity is 100% and RESET: Timed)

Table 5–30: I^2T CURVE TRIP TIMES

MULTIPLIER (TDM)	CURRENT (I / I_{pickup})									
	1.5	2.0	3.0	4.0	5.0	6.0	7.0	8.0	9.0	10.0
0.01	0.44	0.25	0.11	0.06	0.04	0.03	0.02	0.02	0.01	0.01
0.10	4.44	2.50	1.11	0.63	0.40	0.28	0.20	0.16	0.12	0.10
1.00	44.44	25.00	11.11	6.25	4.00	2.78	2.04	1.56	1.23	1.00
10.00	444.44	250.00	111.11	62.50	40.00	27.78	20.41	15.63	12.35	10.00
100.00	4444.4	2500.0	1111.1	625.00	400.00	277.78	204.08	156.25	123.46	100.00
600.00	26666.7	15000.0	6666.7	3750.0	2400.0	1666.7	1224.5	937.50	740.74	600.00

FLEXCURVES

The custom FlexCurves are described in detail in the FlexCurves section of this chapter. The curve shapes for the FlexCurves are derived from the formulae:

$$T = \text{TDM} \times \left[\text{FlexCurve Time at } \left(\frac{I}{I_{pickup}} \right) \right] \text{ when } \left(\frac{I}{I_{pickup}} \right) \geq 1.00 \qquad \textbf{(EQ 5.12)}$$

$$T_{RESET} = \text{TDM} \times \left[\text{FlexCurve Time at } \left(\frac{I}{I_{pickup}} \right) \right] \text{ when } \left(\frac{I}{I_{pickup}} \right) \leq 0.98 \qquad \textbf{(EQ 5.13)}$$

where: T = Operate Time (sec.), TDM = Multiplier setting
I = Input Current, I_{pickup} = Pickup Current setting
T_{RESET} = Reset Time in seconds (assuming energy capacity is 100% and RESET: Timed)

DEFINITE TIME CURVE

The Definite Time curve shape operates as soon as the pickup level is exceeded for a specified period of time. The base definite time curve delay is in seconds. The curve multiplier of 0.00 to 600.00 makes this delay adjustable from instantaneous to 600.00 seconds in steps of 10 ms.

$$T = \text{TDM} \text{ in seconds, when } I > I_{pickup} \qquad \textbf{(EQ 5.14)}$$

$$T_{RESET} = \text{TDM} \text{ in seconds} \qquad \textbf{(EQ 5.15)}$$

where: T = Operate Time (sec.), TDM = Multiplier setting
I = Input Current, I_{pickup} = Pickup Current setting
T_{RESET} = Reset Time in seconds (assuming energy capacity is 100% and RESET: Timed)

RECLOSER CURVES

The G60 uses the FlexCurve feature to facilitate programming of 41 recloser curves. See the FlexCurve section in this chapter for details.

c) PHASE TIME OVERCURRENT (ANSI 51PV, IEC PTOC)

PATH: SETTINGS ⇨⇩ GROUPED ELEMENTS ⇨ SETTING GROUP 1(6) ⇨ PHASE CURRENT ⇨ PHASE TOC1

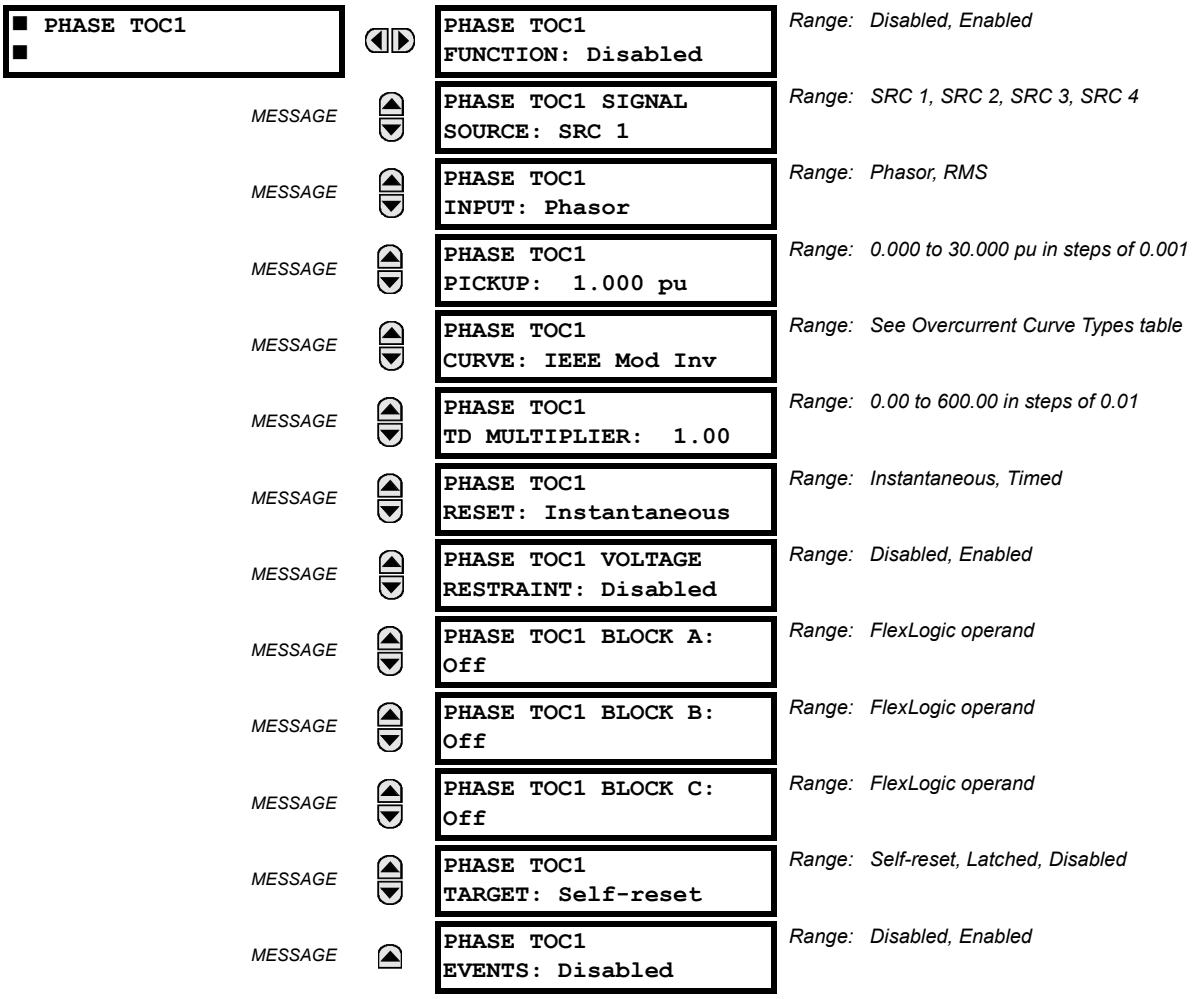

The phase time overcurrent element can provide a desired time-delay operating characteristic versus the applied current or be used as a simple definite time element. The phase current input quantities may be programmed as fundamental phasor magnitude or total waveform RMS magnitude as required by the application.

Two methods of resetting operation are available: “Timed” and “Instantaneous” (see the Inverse TOC Curve Characteristics section earlier for details on curve setup, trip times, and reset operation). When the element is blocked, the time accumulator will reset according to the reset characteristic. For example, if the element reset characteristic is set to “Instantaneous” and the element is blocked, the time accumulator will be cleared immediately.

The **PHASE TOC1 PICKUP** setting can be dynamically reduced by a voltage restraint feature (when enabled). This is accomplished via the multipliers (Mvr) corresponding to the phase-phase voltages of the voltage restraint characteristic curve (see the figure below); the pickup level is calculated as ‘Mvr’ times the **PHASE TOC1 PICKUP** setting. If the voltage restraint feature is disabled, the pickup level always remains at the setting value.

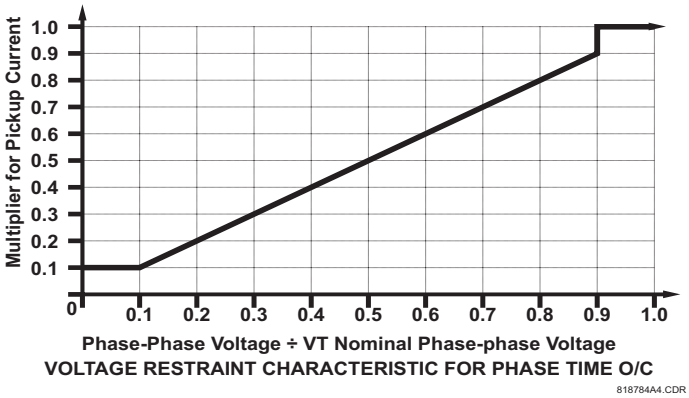

Figure 5–84: PHASE TIME OVERCURRENT VOLTAGE RESTRAINT CHARACTERISTIC

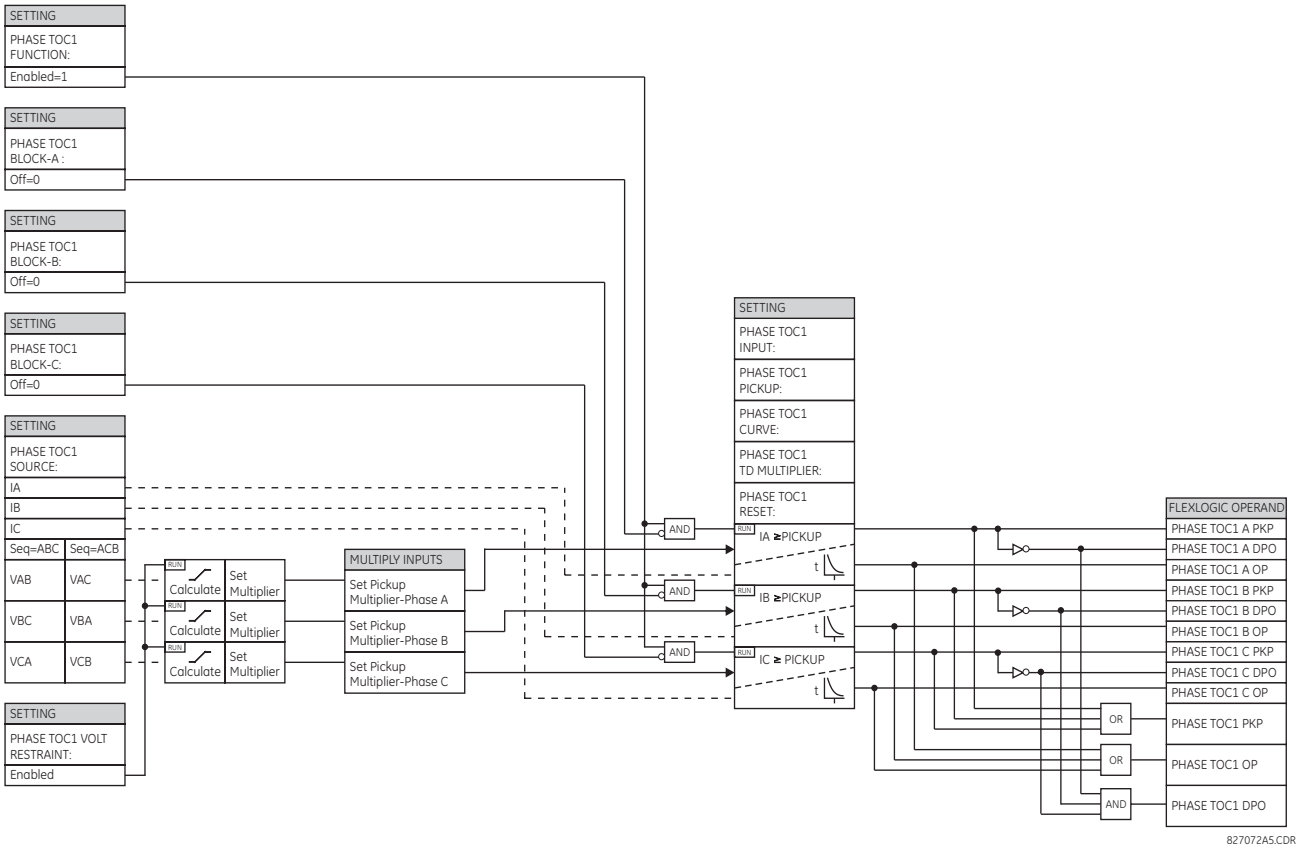

Figure 5–85: PHASE TIME OVERCURRENT 1 SCHEME LOGIC

d) PHASE INSTANTANEOUS OVERCURRENT (ANSI 50P, IEC PIOC)

PATH: SETTINGS ⇨⇩ GROUPED ELEMENTS ⇨ SETTING GROUP 1(6) ⇨ PHASE CURRENT ⇨ PHASE IOC 1(2)

■ PHASE IOC 1 ■		PHASE IOC1 FUNCTION: Disabled	*Range: Disabled, Enabled*
	MESSAGE	PHASE IOC1 SIGNAL SOURCE: SRC 1	*Range: SRC 1, SRC 2, SRC 3, SRC 4*
	MESSAGE	PHASE IOC1 PICKUP: 1.000 pu	*Range: 0.000 to 30.000 pu in steps of 0.001*
	MESSAGE	PHASE IOC1 PICKUP DELAY: 0.00 s	*Range: 0.00 to 600.00 s in steps of 0.01*
	MESSAGE	PHASE IOC1 RESET DELAY: 0.00 s	*Range: 0.00 to 600.00 s in steps of 0.01*
	MESSAGE	PHASE IOC1 BLOCK A: Off	*Range: FlexLogic operand*
	MESSAGE	PHASE IOC1 BLOCK B: Off	*Range: FlexLogic operand*
	MESSAGE	PHASE IOC1 BLOCK C: Off	*Range: FlexLogic operand*
	MESSAGE	PHASE IOC1 TARGET: Self-reset	*Range: Self-reset, Latched, Disabled*
	MESSAGE	PHASE IOC1 EVENTS: Disabled	*Range: Disabled, Enabled*

The phase instantaneous overcurrent element may be used as an instantaneous element with no intentional delay or as a definite time element. The input current is the fundamental phasor magnitude.

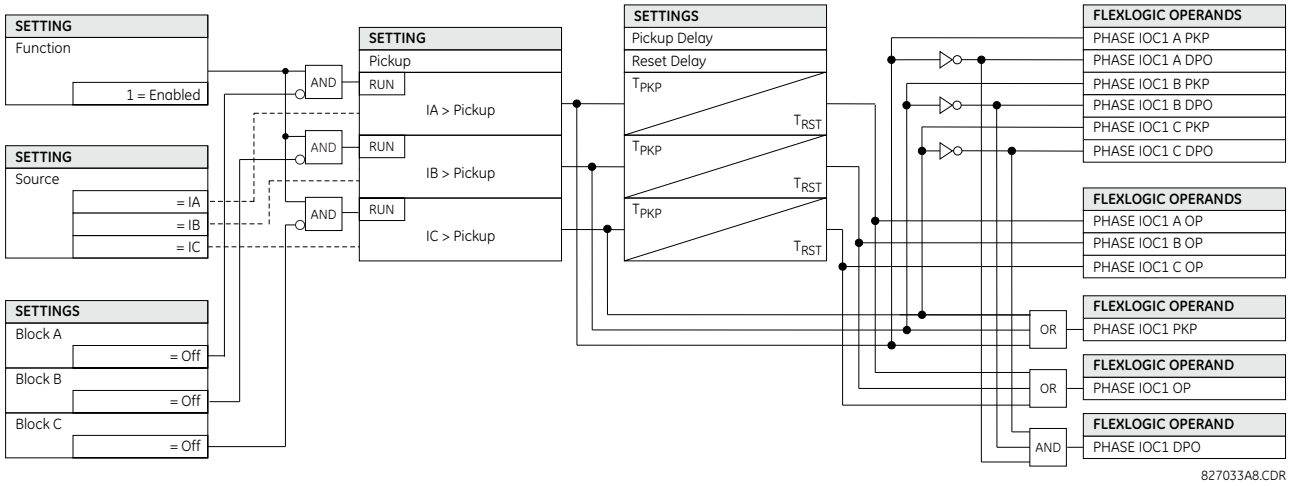

Figure 5–86: PHASE INSTANTANEOUS OVERCURRENT 1 SCHEME LOGIC

e) PHASE DIRECTIONAL OVERCURRENT (ANSI 67P, IEC PDOC/PTOC)

PATH: SETTINGS ⇨⇩ GROUPED ELEMENTS ⇨ SETTING GROUP 1(6) ⇨ PHASE CURRENT ⇨ PHASE DIRECTIONAL 1

■ PHASE ■ DIRECTIONAL 1		PHASE DIR 1 FUNCTION: Disabled	*Range: Disabled, Enabled*
	MESSAGE	PHASE DIR 1 SIGNAL SOURCE: SRC 1	*Range: SRC 1, SRC 2, SRC 3, SRC 4*
	MESSAGE	PHASE DIR 1 BLOCK: Off	*Range: FlexLogic operand*
	MESSAGE	PHASE DIR 1 ECA: 30°	*Range: 0 to 359° in steps of 1*
	MESSAGE	PHASE DIR POL V1 THRESHOLD: 0.700 pu	*Range: 0.000 to 3.000 pu in steps of 0.001*
	MESSAGE	PHASE DIR 1 BLOCK WHEN V MEM EXP: No	*Range: No, Yes*
	MESSAGE	PHASE DIR 1 TARGET: Self-reset	*Range: Self-reset, Latched, Disabled*
	MESSAGE	PHASE DIR 1 EVENTS: Disabled	*Range: Disabled, Enabled*

NOTE

The TARGET setting is not user-selectable and forced to "Disabled". If Targets are required from directional elements, it can be achieved by assigning directional element output to a digital element, where targets selection can be used as required.

The phase directional elements (one for each of phases A, B, and C) determine the phase current flow direction for steady state and fault conditions and can be used to control the operation of the phase overcurrent elements via the **BLOCK** inputs of these elements.

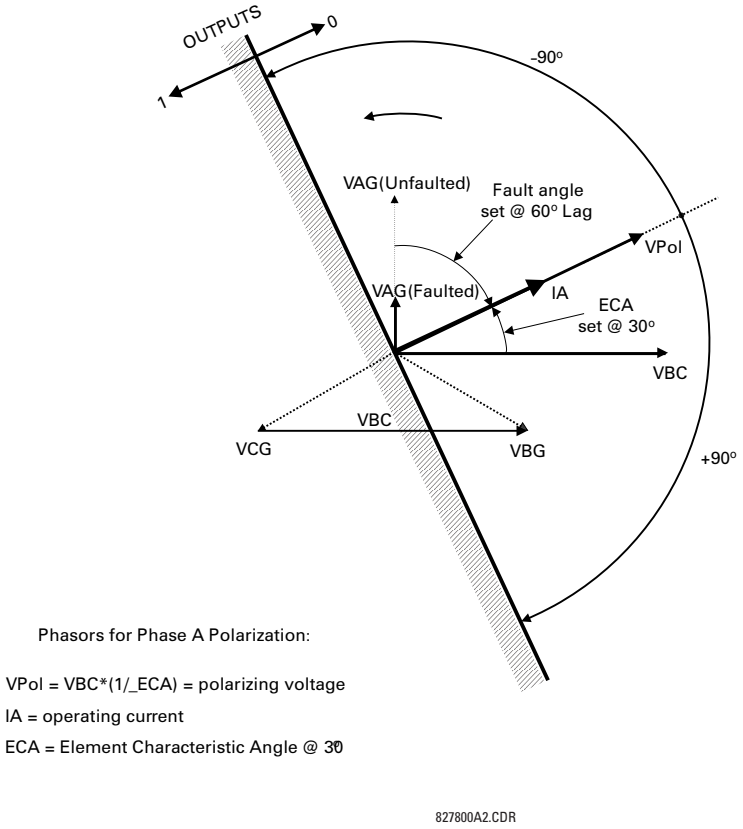

Figure 5–87: PHASE A DIRECTIONAL POLARIZATION

This element is intended to apply a block signal to an overcurrent element to prevent an operation when current is flowing in a particular direction. The direction of current flow is determined by measuring the phase angle between the current from the phase CTs and the line-line voltage from the VTs, based on the 90° or quadrature connection. If there is a requirement to supervise overcurrent elements for flows in opposite directions, such as can happen through a bus-tie breaker, two phase directional elements should be programmed with opposite element characteristic angle (ECA) settings.

To increase security for three phase faults very close to the VTs used to measure the polarizing voltage, a voltage memory feature is incorporated. This feature stores the polarizing voltage the moment before the voltage collapses, and uses it to determine direction. The voltage memory remains valid for one second after the voltage has collapsed.

The main component of the phase directional element is the phase angle comparator with two inputs: the operating signal (phase current) and the polarizing signal (the line voltage, shifted in the leading direction by the characteristic angle, ECA).

The following table shows the operating and polarizing signals used for phase directional control:

PHASE	OPERATING SIGNAL	POLARIZING SIGNAL V_{pol}	
		ABC PHASE SEQUENCE	ACB PHASE SEQUENCE
A	angle of IA	angle of VBC × (1∠ECA)	angle of VCB × (1∠ECA)
B	angle of IB	angle of VCA × (1∠ECA)	angle of VAC × 1∠ECA)
C	angle of IC	angle of VAB × (1∠ECA)	angle of VBA × (1∠ECA)

MODE OF OPERATION:

- When the function is “Disabled”, or the operating current is below 5% × CT nominal, the element output is “0”.
- When the function is “Enabled”, the operating current is above 5% × CT nominal, and the polarizing voltage is above the **PRODUCT SETUP ⇨⇩ DISPLAY PROPERTIES ⇨⇩ VOLTAGE CUT-OFF LEVEL** value, the element output is dependent on the phase angle between the operating and polarizing signals:
  - The element output is logic “0” when the operating current is within polarizing voltage ±90°.
  - For all other angles, the element output is logic “1”.
- Once the voltage memory has expired, the phase overcurrent elements under directional control can be set to block or trip on overcurrent as follows:
  - When **BLOCK WHEN V MEM EXP** is set to “Yes”, the directional element will block the operation of any phase overcurrent element under directional control when voltage memory expires.
  - When **BLOCK WHEN V MEM EXP** is set to “No”, the directional element allows tripping of phase overcurrent elements under directional control when voltage memory expires.

In all cases, directional blocking will be permitted to resume when the polarizing voltage becomes greater than the ‘polarizing voltage threshold’.

SETTINGS:

- **PHASE DIR 1 SIGNAL SOURCE:** This setting is used to select the source for the operating and polarizing signals. The operating current for the phase directional element is the phase current for the selected current source. The polarizing voltage is the line voltage from the phase VTs, based on the 90° or ‘quadrature’ connection and shifted in the leading direction by the element characteristic angle (ECA).
- **PHASE DIR 1 ECA:** This setting is used to select the element characteristic angle, i.e. the angle by which the polarizing voltage is shifted in the leading direction to achieve dependable operation. In the design of the UR-series elements, a block is applied to an element by asserting logic 1 at the blocking input. This element should be programmed via the ECA setting so that the output is **logic 1 for current in the non-tripping direction**.
- **PHASE DIR 1 POL V THRESHOLD:** This setting is used to establish the minimum level of voltage for which the phase angle measurement is healthy and reliable. Do not set this setting too low because the element can continue using the actual voltage already distorted by the fault instead of using healthy memory voltage—this can cause wrong directional discrimination.
- **PHASE DIR 1 BLOCK WHEN V MEM EXP:** This setting is used to select the required operation upon expiration of voltage memory. When set to "Yes", the directional element blocks the operation of any phase overcurrent element under directional control, when voltage memory expires; when set to "No", the directional element allows tripping of phase overcurrent elements under directional control.

NOTE

The phase directional element responds to the forward load current. In the case of a following reverse fault, the element needs some time – in the order of 8 ms – to establish a blocking signal. Some protection elements such as instantaneous overcurrent may respond to reverse faults before the blocking signal is established. Therefore, a coordination time of at least 10 ms must be added to all the instantaneous protection elements under the supervision of the phase directional element. If current reversal is of a concern, a longer delay – in the order of 20 ms – may be needed.

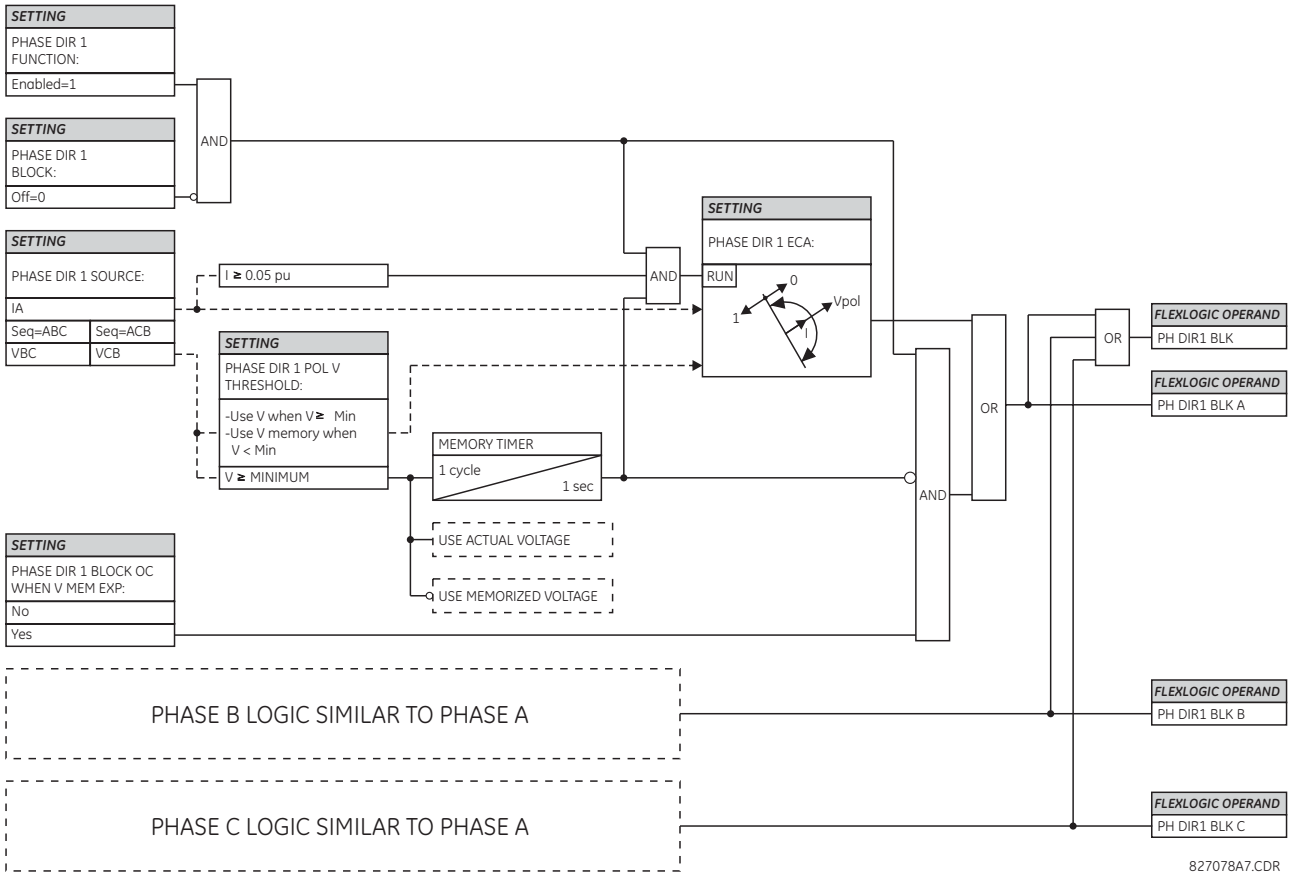

Figure 5–88: PHASE DIRECTIONAL SCHEME LOGIC

5.6.7 NEUTRAL CURRENT

a) MAIN MENU

PATH: SETTINGS ⇩ GROUPED ELEMENTS ⇨ SETTING GROUP 1(6) ⇨⇩ NEUTRAL CURRENT

■ NEUTRAL CURRENT ■		■ NEUTRAL TOC 1 ■	See page 5–203.
	MESSAGE	■ NEUTRAL IOC 1 ■	See page 5–204.
	MESSAGE	■ NEUTRAL ■ DIRECTIONAL OC1	See page 5–205.
	MESSAGE	■ NEUTRAL ■ DIRECTIONAL OC2	See page 5–205.

b) NEUTRAL TIME OVERCURRENT (ANSI 51N, IEC PTOC)

PATH: SETTINGS ⇨⇩ GROUPED ELEMENTS ⇨ SETTING GROUP 1(6) ⇨⇩ NEUTRAL CURRENT ⇨ NEUTRAL TOC1

■ NEUTRAL TOC 1 ■		NEUTRAL TOC1 FUNCTION: Disabled	Range: Disabled, Enabled
	MESSAGE	NEUTRAL TOC1 SIGNAL SOURCE: SRC 1	Range: SRC 1, SRC 2, SRC 3, SRC 4
	MESSAGE	NEUTRAL TOC1 INPUT: Phasor	Range: Phasor, RMS
	MESSAGE	NEUTRAL TOC1 PICKUP: 1.000 pu	Range: 0.000 to 30.000 pu in steps of 0.001
	MESSAGE	NEUTRAL TOC1 CURVE: IEEE Mod Inv	Range: See the Overcurrent Curve Types table
	MESSAGE	NEUTRAL TOC1 TD MULTIPLIER: 1.00	Range: 0.00 to 600.00 in steps of 0.01
	MESSAGE	NEUTRAL TOC1 RESET: Instantaneous	Range: Instantaneous, Timed
	MESSAGE	NEUTRAL TOC1 BLOCK: Off	Range: FlexLogic operand
	MESSAGE	NEUTRAL TOC1 TARGET: Self-reset	Range: Self-reset, Latched, Disabled
	MESSAGE	NEUTRAL TOC1 EVENTS: Disabled	Range: Disabled, Enabled

The neutral time overcurrent element can provide a desired time-delay operating characteristic versus the applied current or be used as a simple definite time element. The neutral current input value is a quantity calculated as 3I0 from the phase currents and may be programmed as fundamental phasor magnitude or total waveform RMS magnitude as required by the application.

Two methods of resetting operation are available: “Timed” and “Instantaneous” (see the Inverse TOC Curve Characteristics section for details on curve setup, trip times and reset operation). When the element is blocked, the time accumulator will reset according to the reset characteristic. For example, if the element reset characteristic is set to “Instantaneous” and the element is blocked, the time accumulator will be cleared immediately.

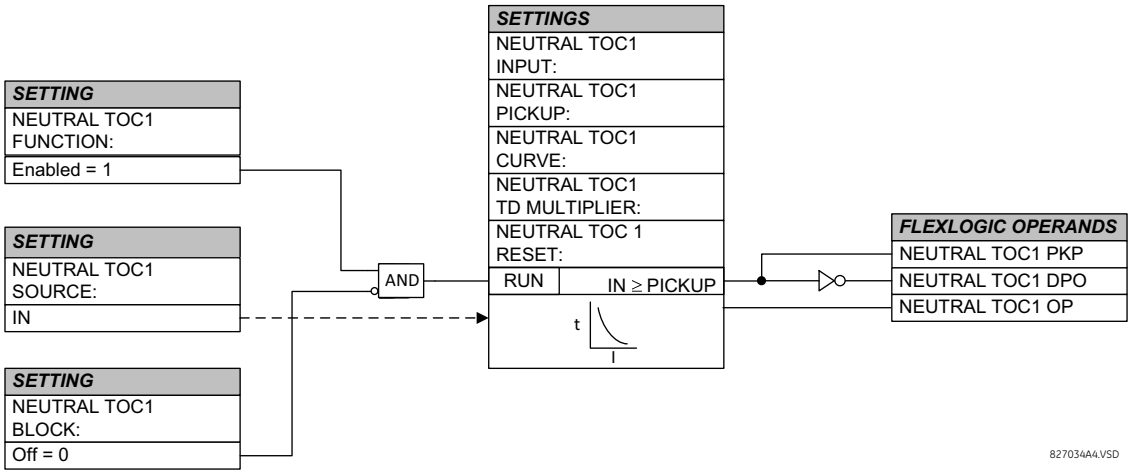

Figure 5–89: NEUTRAL TIME OVERCURRENT 1 SCHEME LOGIC

c) NEUTRAL INSTANTANEOUS OVERCURRENT (ANSI 50N, IEC PIOC)

PATH: SETTINGS ⇨⇩ GROUPED ELEMENTS ⇨ SETTING GROUP 1(6) ⇨⇩ NEUTRAL CURRENT ⇨⇩ NEUTRAL IOC1

```
■ NEUTRAL IOC 1
■
```

		Range:
	NEUTRAL IOC1 FUNCTION: Disabled	Disabled, Enabled
MESSAGE	NEUTRAL IOC1 SIGNAL SOURCE: SRC 1	SRC 1, SRC 2, SRC 3, SRC 4
MESSAGE	NEUTRAL IOC1 PICKUP: 1.000 pu	0.000 to 30.000 pu in steps of 0.001
MESSAGE	NEUTRAL IOC1 PICKUP DELAY: 0.00 s	0.00 to 600.00 s in steps of 0.01
MESSAGE	NEUTRAL IOC1 RESET DELAY: 0.00 s	0.00 to 600.00 s in steps of 0.01
MESSAGE	NEUTRAL IOC1 BLOCK: Off	FlexLogic operand
MESSAGE	NEUTRAL IOC1 TARGET: Self-reset	Self-reset, Latched, Disabled
MESSAGE	NEUTRAL IOC1 EVENTS: Disabled	Disabled, Enabled

5

The neutral instantaneous overcurrent element may be used as an instantaneous function with no intentional delay or as a definite time function. The element essentially responds to the magnitude of a neutral current fundamental frequency phasor calculated from the phase currents. A positive-sequence restraint is applied for better performance. A small portion (6.25%) of the positive-sequence current magnitude is subtracted from the zero-sequence current magnitude when forming the operating quantity of the element as follows:

$$I_{op} = 3 \times (|I\_0| - K \times |I\_1|) \quad \text{where } K = 1/16 \qquad \textbf{(EQ 5.16)}$$

The positive-sequence restraint allows for more sensitive settings by counterbalancing spurious zero-sequence currents resulting from

- System unbalances under heavy load conditions
- Transformation errors of current transformers (CTs) during double-line and three-phase faults
- Switch-off transients during double-line and three-phase faults

The positive-sequence restraint must be considered when testing for pickup accuracy and response time (multiple of pickup). The operating quantity depends on how test currents are injected into the relay, where single-phase injection is $I_{op} = 0.9375 \times I_{injected}$ and three-phase pure zero-sequence injection is $I_{op} = 3 \times I_{injected}$

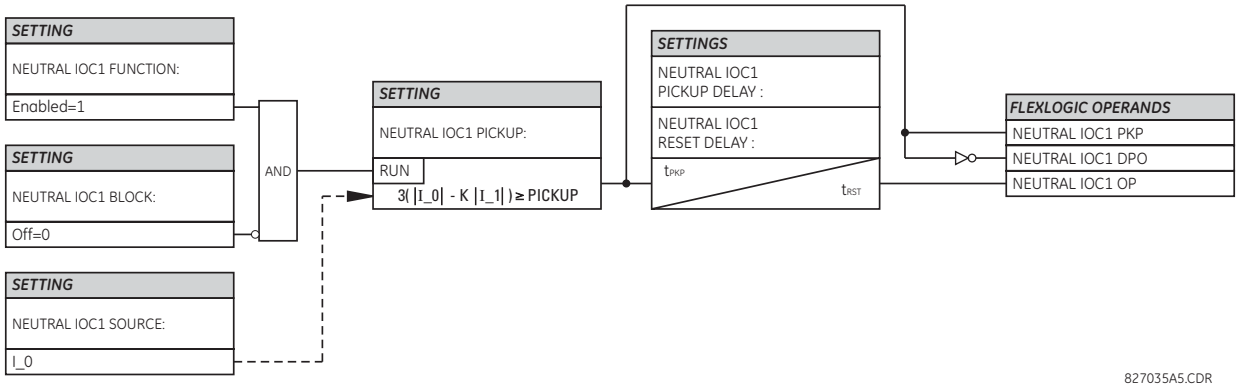

Figure 5–90: NEUTRAL IOC1 SCHEME LOGIC

d) NEUTRAL DIRECTIONAL OVERCURRENT (ANSI 67N, IEC PDEF/PTOC)

PATH: SETTINGS ⇨⇩ GROUPED ELEMENTS ⇨ SETTING GROUP 1(6) ⇨⇩ NEUTRAL CURRENT ⇨⇩ NEUTRAL DIRECTIONAL OC1(2)

■ NEUTRAL ■ DIRECTIONAL OC1		NEUTRAL DIR OC1 FUNCTION: Disabled	Range: Disabled, Enabled
	MESSAGE	NEUTRAL DIR OC 1 SOURCE: SRC 1	Range: SRC 1, SRC 2, SRC 3, SRC 4
	MESSAGE	NEUTRAL DIR OC1 POLARIZING: Voltage	Range: Voltage, Current, Dual, Dual-V, Dual-I
	MESSAGE	NEUTRAL DIR OC1 POL VOLT: Calculated V0	Range: Calculated V0, Aux. Voltage (VX)
	MESSAGE	NEUTRAL DIR OC1 OP CURR: Calculated 3I0	Range: Calculated 3I0, Measured IG
	MESSAGE	NEUTRAL DIR OC1 POS- SEQ RESTRAINT: 0.063	Range: 0.000 to 0.500 in steps of 0.001
	MESSAGE	NEUTRAL DIR OC1 OFFSET: 0.00 Ω	Range: 0.00 to 250.00 Ω in steps of 0.01
	MESSAGE	NEUTRAL DIR OC1 FWD ECA: 75° Lag	Range: –90 to 90° in steps of 1
	MESSAGE	NEUTRAL DIR OC1 FWD LIMIT ANGLE: 90°	Range: 40 to 90° in steps of 1
	MESSAGE	NEUTRAL DIR OC1 FWD PICKUP: 0.050 pu	Range: 0.006 to 30.000 pu in steps of 0.001
	MESSAGE	NEUTRAL DIR OC1 REV LIMIT ANGLE: 90°	Range: 40 to 90° in steps of 1
	MESSAGE	NEUTRAL DIR OC1 REV PICKUP: 0.050 pu	Range: 0.006 to 30.000 pu in steps of 0.001
	MESSAGE	NEUTRAL DIR OC1 BLK: Off	Range: FlexLogic operand
	MESSAGE	NEUTRAL DIR OC1 TARGET: Self-reset	Range: Self-reset, Latched, Disabled
	MESSAGE	NEUTRAL DIR OC1 EVENTS: Disabled	Range: Disabled, Enabled

The neutral directional overcurrent element provides both forward and reverse fault direction indications the NEUTRAL DIR OC1 FWD and NEUTRAL DIR OC1 REV operands, respectively. The output operand is asserted if the magnitude of the operating current is above a pickup level (overcurrent unit) and the fault direction is seen as *forward* or *reverse*, respectively (directional unit).

The **overcurrent unit** responds to the magnitude of a fundamental frequency phasor of the either the neutral current calculated from the phase currents or the ground current. There are separate pickup settings for the forward-looking and reverse-looking functions. If set to use the calculated 3I_0, the element applies a *positive-sequence restraint* for better performance: a small user-programmable portion of the positive-sequence current magnitude is subtracted from the zero-sequence current magnitude when forming the operating quantity.

$$I_{op} = 3 \times (|I\_0| - K \times |I\_1|) \quad \textbf{(EQ 5.17)}$$

The positive-sequence restraint allows for more sensitive settings by counterbalancing spurious zero-sequence currents resulting from:

- System unbalances under heavy load conditions.

- Transformation errors of current transformers (CTs) during double-line and three-phase faults.
- Switch-off transients during double-line and three-phase faults.

The positive-sequence restraint must be considered when testing for pickup accuracy and response time (multiple of pickup). The operating quantity depends on the way the test currents are injected into the relay (single-phase injection: $I_{op} = (1 - K) \times I_{injected}$; three-phase pure zero-sequence injection: $I_{op} = 3 \times I_{injected}$).

The positive-sequence restraint is removed for low currents. If the positive-sequence current is below 0.8 pu, the restraint is removed by changing the constant *K* to zero. This facilitates better response to high-resistance faults when the unbalance is very small and there is no danger of excessive CT errors as the current is low.

The **directional unit** uses the zero-sequence current (I_0) or ground current (IG) for fault direction discrimination and may be programmed to use either zero-sequence voltage ("Calculated V0" or "Measured VX"), ground current (IG), or both for polarizing. The zero-sequence current (I_0) must be greater than the **PRODUCT SETUP ⇨⇩ DISPLAY PROPERTIES ⇨⇩ CURRENT CUT-OFF LEVEL** setting value and IG must be greater than 0.05 pu to be validated as the operating quantity for directional current. The following tables define the neutral directional overcurrent element.

Table 5–31: QUANTITIES FOR "CALCULATED 3I0" CONFIGURATION

DIRECTIONAL UNIT				OVERCURRENT UNIT
POLARIZING MODE	DIRECTION	COMPARED PHASORS		
Voltage	Forward	–V_0 + Z_offset × I_0	I_0 × 1∠ECA	$I_{op} = 3 \times (\lvert I\_0\rvert - K \times \lvert I\_1\rvert)$ if $\lvert I_1\rvert > 0.8$ pu $I_{op} = 3 \times (\lvert I\_0\rvert)$ if $\lvert I_1\rvert \le 0.8$ pu
	Reverse	–V_0 + Z_offset × I_0	–I_0 × 1∠ECA	
Current	Forward	IG	I_0	
	Reverse	IG	–I_0	
Dual, Dual-V, Dual-I	Forward	–V_0 + Z_offset × I_0	I_0 × 1∠ECA	
		or		
		IG	I_0	
	Reverse	–V_0 + Z_offset × I_0	–I_0 × 1∠ECA	
		or		
		IG	–I_0	

Table 5–32: QUANTITIES FOR "MEASURED IG" CONFIGURATION

DIRECTIONAL UNIT				OVERCURRENT UNIT
POLARIZING MODE	DIRECTION	COMPARED PHASORS		
Voltage	Forward	–V_0 + Z_offset × IG/3	IG × 1∠ECA	$I_{op} = \lvert IG\rvert$
	Reverse	–V_0 + Z_offset × IG/3	–IG × 1∠ECA	

where: $V\_0 = \frac{1}{3}(VAG + VBG + VCG)$ = zero sequence voltage ,

$I\_0 = \frac{1}{3}IN = \frac{1}{3}(IA + IB + IC)$ = zero sequence current ,

ECA = element characteristic angle
IG = ground current
Z_offset is the offset impedance, for which magnitude is the OFFSET setting and angle is the FWD ECA

When **NEUTRAL DIR OC1 POL VOLT** is set to "Measured VX", one-third of this voltage is used in place of V_0. The following figure explains the usage of the voltage polarized directional unit of the element.

The figure below shows the voltage-polarized phase angle comparator characteristics for a phase A to ground fault, with:

- ECA = 90° (element characteristic angle = centerline of operating characteristic)
- FWD LA = 80° (forward limit angle = the ± angular limit with the ECA for operation)
- REV LA = 80° (reverse limit angle = the ± angular limit with the ECA for operation)

The above bias should be taken into account when using the neutral directional overcurrent element to directionalize other protection elements.

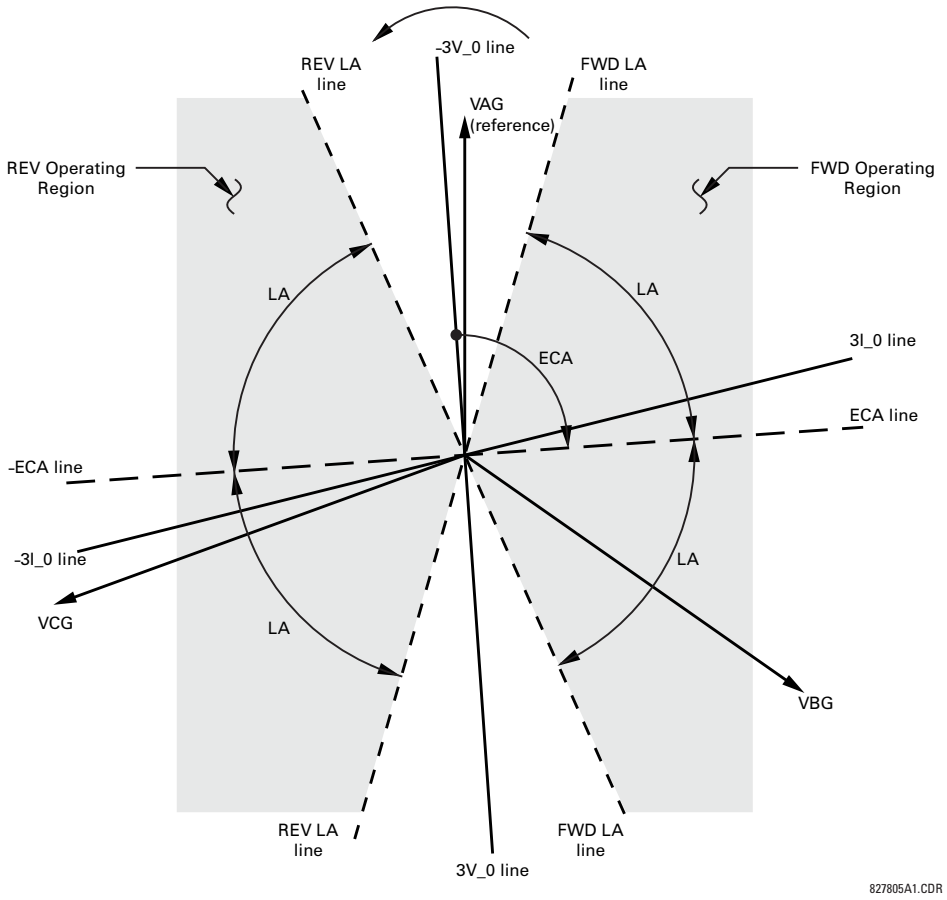

Figure 5–91: NEUTRAL DIRECTIONAL VOLTAGE-POLARIZED CHARACTERISTICS

- **NEUTRAL DIR OC1 POLARIZING:** This setting selects the polarizing mode for the directional unit.
  - If "Voltage" polarizing is selected, the element uses the zero-sequence voltage angle for polarization. The user can use either the zero-sequence voltage V_0 calculated from the phase voltages, or the zero-sequence voltage supplied externally as the auxiliary voltage V_X, both from the **NEUTRAL DIR OC1 SOURCE**.

    The calculated V_0 can be used as polarizing voltage only if the voltage transformers are connected in Wye. The auxiliary voltage can be used as the polarizing voltage provided **SYSTEM SETUP ⇨ AC INPUTS ⇨⇩ VOLTAGE BANK ⇨⇩ AUXILIARY VT CONNECTION** is set to "Vn" and the auxiliary voltage is connected to a zero-sequence voltage source (such as broken delta connected secondary of VTs).

    The zero sequence voltage V_0 must be greater than **PRODUCT SETUP ⇨⇩ DISPLAY PROPERTIES ⇨⇩ VOLTAGE CUT-OFF LEVEL** to be validated for use as polarizing signal. Additionally, when offset impedance is applied and zero-sequence current is above 0.2 pu, compensated zero-sequence voltage -V_0 + Z_offset x I_0 has to be above 0.02 pu in order to discriminate fault direction; otherwise when zero-sequence current is less than 0.2 pu, -V_0 is then used as the polarizing signal. If the polarizing signal is invalid, neither forward nor reverse indication is given.
  - If "Current" polarizing is selected, the element uses the ground current angle connected externally and configured under **NEUTRAL OC1 SOURCE** for polarization. The ground CT must be connected between the ground and neutral point of an adequate local source of ground current. The ground current must be greater than 0.05 pu to be validated as a polarizing signal. If the polarizing signal is not valid, neither forward nor reverse indication is given. In addition, the zero-sequence current (I_0) must be greater than the **PRODUCT SETUP ⇨⇩ DISPLAY PROPERTIES ⇨⇩ CURRENT CUT-OFF LEVEL** setting value.

For a choice of current polarizing, it is recommended that the polarizing signal be analyzed to ensure that a known direction is maintained irrespective of the fault location. For example, if using an autotransformer neutral current as a polarizing source, it should be ensured that a reversal of the ground current does not occur for a high-side fault. The low-side system impedance should be assumed minimal when checking for this condition. A similar situation arises for a wye/delta/wye transformer, where current in one transformer winding neutral may reverse when faults on both sides of the transformer are considered.

– If “Dual” polarizing is selected, the element performs both directional comparisons as described. A given direction is confirmed if either voltage or current comparators indicate so. If a conflicting (simultaneous forward and reverse) indication occurs, the forward direction overrides the reverse direction.

– If "Dual-V" polarizing is selected, "Voltage" polarizing is performed and "Current" polarizing is ignored if the voltage polarizing signal is valid; otherwise "Current" polarizing is performed if the current polarizing signal is valid. If neither of them is valid, neither forward nor reverse indication is given.

– If "Dual-I" polarizing is selected, "Current" polarizing is performed and "Voltage" polarizing is ignored if the current polarizing signal is valid; otherwise "Voltage" polarizing is performed if the voltage polarizing signal is valid. If neither of them is valid, neither forward nor reverse indication is given.

- **NEUTRAL DIR OC1 POL VOLT:** Selects the polarizing voltage used by the directional unit when "Voltage," "Dual," "Dual-V," or "Dual-I" polarizing mode is set. The polarizing voltage can be programmed to be either the zero-sequence voltage calculated from the phase voltages ("Calculated V0") or supplied externally as an auxiliary voltage ("Measured VX").
- **NEUTRAL DIR OC1 OP CURR:** This setting indicates whether the 3I_0 current calculated from the phase currents, or the ground current shall be used by this protection. This setting acts as a switch between the neutral and ground modes of operation (67N and 67G). If set to “Calculated 3I0” the element uses the phase currents and applies the positive-sequence restraint; if set to “Measured IG” the element uses ground current supplied to the ground CT of the CT bank configured as **NEUTRAL DIR OC1 SOURCE**. If this setting is “Measured IG”, then the **NEUTRAL DIR OC1 POLARIZING** setting must be “Voltage”, as it is not possible to use the ground current as an operating and polarizing signal simultaneously. IG current has to be above 0.05 pu to be used as operate quantity.
- **NEUTRAL DIR OC1 POS-SEQ RESTRAINT**: This setting controls the amount of the positive-sequence restraint. Set to 0.063 for backward compatibility with firmware revision 3.40 and older. Set to zero to remove the restraint. Set higher if large system unbalances or poor CT performance are expected.
- **NEUTRAL DIR OC1 OFFSET:** This setting specifies the offset impedance used by this protection. The primary application for the offset impedance is to guarantee correct identification of fault direction on series compensated lines. In regular applications, the offset impedance ensures proper operation even if the zero-sequence voltage at the relaying point is very small. If this is the intent, the offset impedance shall not be larger than the zero-sequence impedance of the protected circuit. Practically, it shall be several times smaller. The offset impedance shall be entered in secondary ohms.
- **NEUTRAL DIR OC1 FWD ECA:** This setting defines the characteristic angle (ECA) for the forward direction in the "Voltage" polarizing mode. The "Current" polarizing mode uses a fixed ECA of 0°. The ECA in the reverse direction is the angle set for the forward direction shifted by 180°.
- **NEUTRAL DIR OC1 FWD LIMIT ANGLE:** This setting defines a symmetrical (in both directions from the ECA) limit angle for the forward direction.
- **NEUTRAL DIR OC1 FWD PICKUP:** This setting defines the pickup level for the overcurrent unit of the element in the forward direction. When selecting this setting it must be kept in mind that the design uses a ‘positive-sequence restraint’ technique for the “Calculated 3I0” mode of operation.
- **NEUTRAL DIR OC1 REV LIMIT ANGLE:** This setting defines a symmetrical (in both directions from the ECA) limit angle for the reverse direction.
- **NEUTRAL DIR OC1 REV PICKUP:** This setting defines the pickup level for the overcurrent unit of the element in the reverse direction. When selecting this setting it must be kept in mind that the design uses a *positive-sequence restraint* technique for the “Calculated 3I0” mode of operation.

NOTE

Proper application of this element requires that the operating current and the polarizing voltage (or current) be measured from the same side of the transformer.

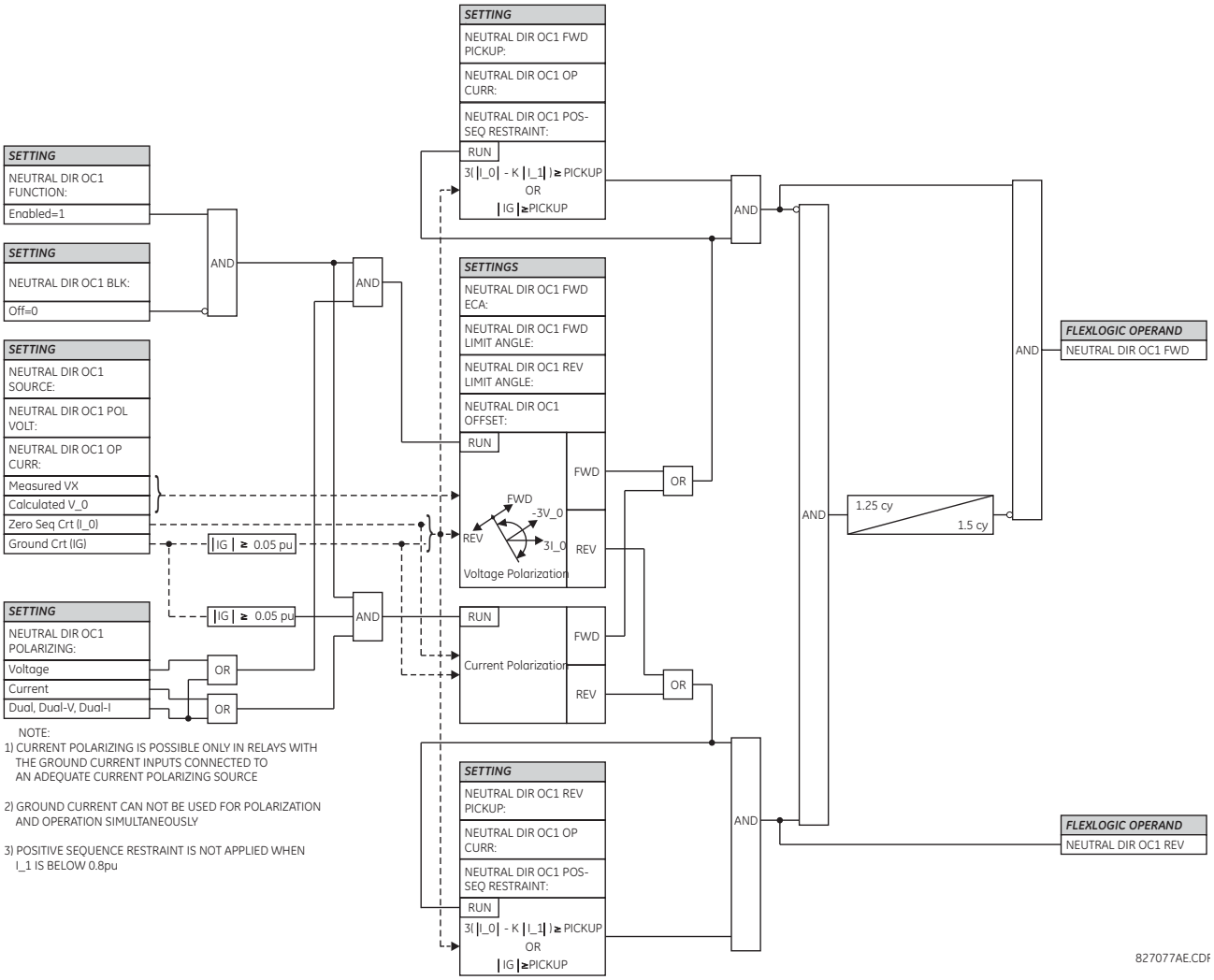

Figure 5–92: NEUTRAL DIRECTIONAL OVERCURRENT LOGIC

5.6.8 GROUND CURRENT

a) MAIN MENU

PATH: SETTINGS ⇩ GROUPED ELEMENTS ⇨ SETTING GROUP 1(6) ⇨⇩ GROUND CURRENT

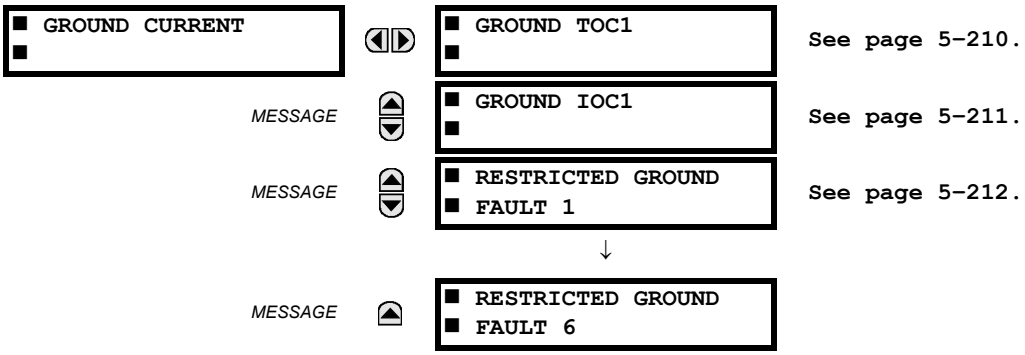

The G60 relay contains one Ground Time Overcurrent, one Ground Instantaneous Overcurrent, and six Restricted Ground Fault elements. Refer to Inverse Time Overcurrent Characteristics on page 5–191 for additional information.

b) GROUND TIME OVERCURRENT (ANSI 51G, IEC PTOC)

PATH: SETTINGS ⇨⇩ GROUPED ELEMENTS ⇨ SETTING GROUP 1(6) ⇨⇩ GROUND CURRENT ⇨ GROUND TOC1

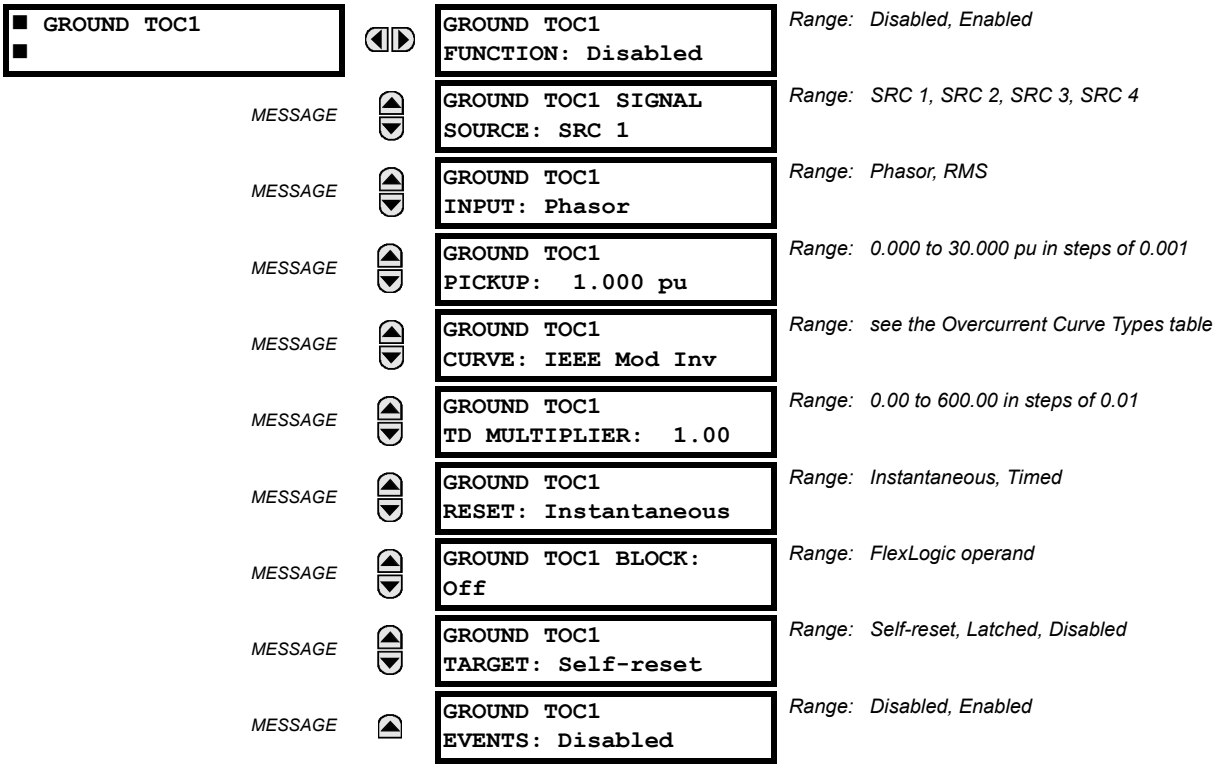

This element can provide a desired time-delay operating characteristic versus the applied current or be used as a simple definite time element. The ground current input value is the quantity measured by the ground input CT and is the fundamental phasor or RMS magnitude. Two methods of resetting operation are available: “Timed” and “Instantaneous” (see the Inverse TOC Curve Characteristics section for details). When the element is blocked, the time accumulator will reset according to the reset characteristic. For example, if the element reset characteristic is set to “Instantaneous” and the element is blocked, the time accumulator will be cleared immediately.

NOTE

These elements measure the current that is connected to the ground channel of a CT/VT module. The conversion range of a standard channel is from 0.02 to 46 times the CT rating.

NOTE

This channel may be also equipped with a sensitive input. The conversion range of a sensitive channel is from 0.002 to 4.6 times the CT rating.

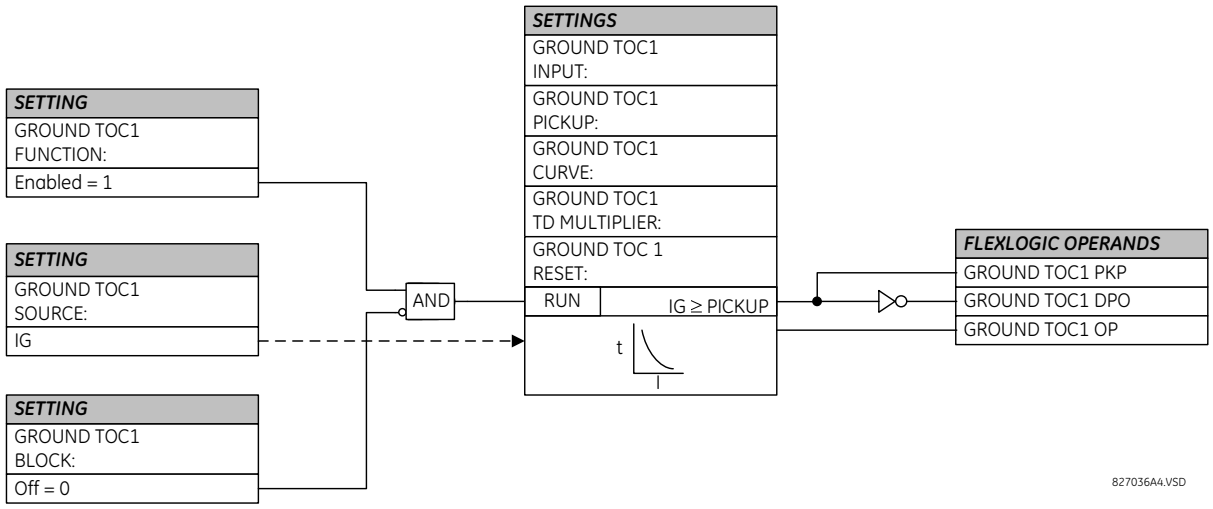

Figure 5–93: GROUND TOC1 SCHEME LOGIC

c) GROUND INSTANTANEOUS OVERCURRENT (ANSI 50G, IEC PIOC)

PATH: SETTINGS ⇨⇩ GROUPED ELEMENTS ⇨ SETTING GROUP 1(6) ⇨⇩ GROUND CURRENT ⇨⇩ GROUND IOC1

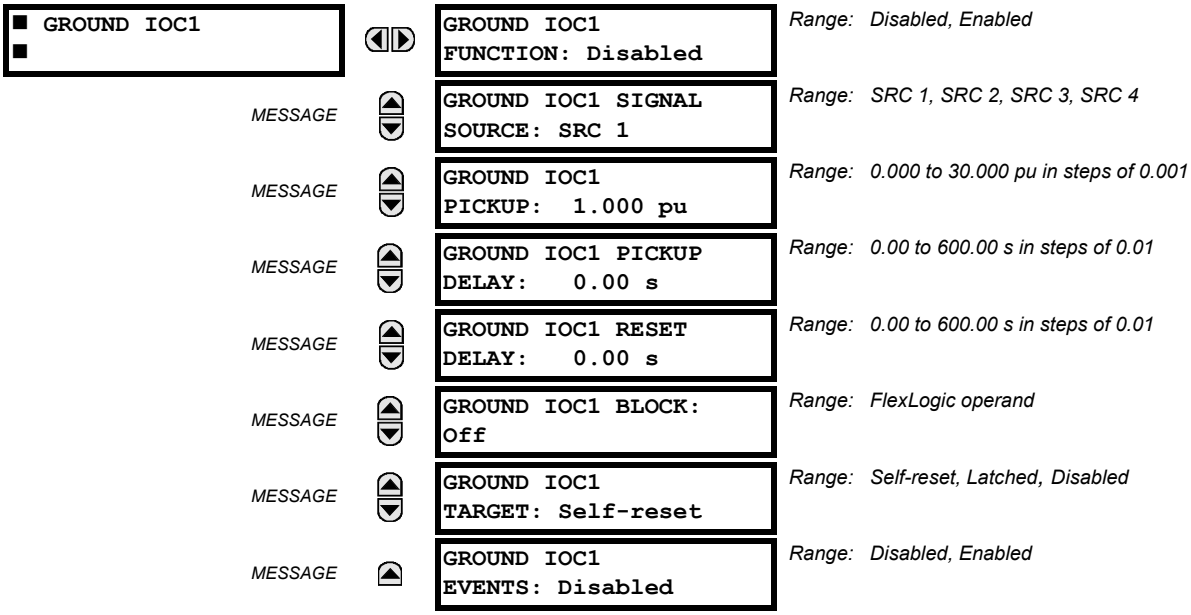

The ground instantaneous overcurrent element may be used as an instantaneous element with no intentional delay or as a definite time element. The ground current input is the quantity measured by the ground input CT and is the fundamental phasor magnitude.

NOTE These elements measure the current that is connected to the ground channel of a CT/VT module. The conversion range of a standard channel is from 0.02 to 46 times the CT rating.

NOTE This channel may be equipped with a standard or sensitive input. The conversion range of a sensitive channel is from 0.002 to 4.6 times the CT rating.

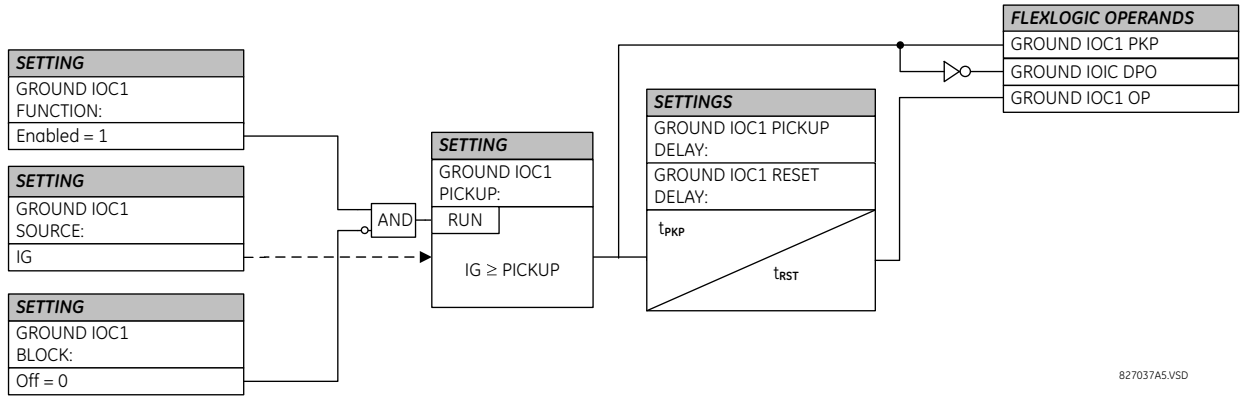

Figure 5–94: GROUND IOC1 SCHEME LOGIC

d) RESTRICTED GROUND FAULT (ANSI 87RGF, IEC PNDF)

PATH: SETTINGS ⇨⇩ GROUPED ELEMENTS ⇨ SETTING GROUP 1(6) ⇨⇩ GROUND CURRENT ⇨⇩ RESTRICTED GROUND FAULT 1(6)

■ RESTRICTED GROUND ■ FAULT 1		RESTD GND FT1 FUNCTION: Disabled	*Range: Disabled, Enabled*
	MESSAGE	RESTD GND FT1 SOURCE: SRC 1	*Range: SRC 1, SRC 2, SRC 3, SRC 4*
	MESSAGE	RESTD GND FT1 PICKUP: 0.080 pu	*Range: 0.005 to 30.000 pu in steps of 0.001*
	MESSAGE	RESTD GND FT1 SLOPE: 40%	*Range: 0 to 100% in steps of 1*
	MESSAGE	RESTD GND FT1 PICKUP DELAY: 0.00 s	*Range: 0.00 to 600.00 s in steps of 0.01*
	MESSAGE	RESTD GND FT1 RESET DELAY: 0.00 s	*Range: 0.00 to 600.00 s in steps of 0.01*
	MESSAGE	RESTD GND FT1 BLOCK: Off	*Range: FlexLogic operand*
	MESSAGE	RESTD GND FT1 TARGET: Self-reset	*Range: Self-reset, Latched, Disabled*
	MESSAGE	RESTD GND FT1 EVENTS: Disabled	*Range: Disabled, Enabled*

Restricted ground fault (RGF) protection provides sensitive ground fault detection for low-magnitude fault currents, primarily faults close to the neutral point of a wye-connected winding. An internal ground fault on an impedance grounded wye winding will produce a fault current dependent on the ground impedance value and the fault position on the winding with respect to the neutral point. The resultant primary current will be negligible for faults on the lower 30% of the winding since the fault voltage is not the system voltage, but rather the result of the transformation ratio between the primary windings and the percentage of shorted turns on the secondary. Therefore, the resultant differential currents may be below the slope threshold of the main differential element and the fault could go undetected. Application of the restricted ground fault protection extends the coverage towards the neutral point (see the diagram).

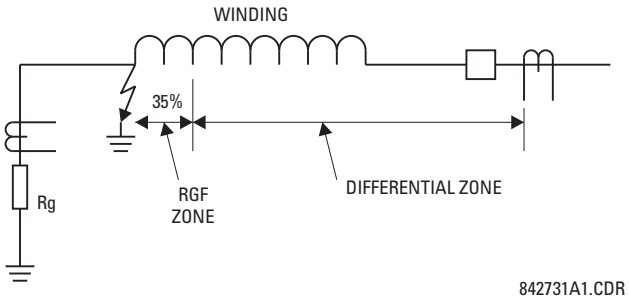

Figure 5–95: RGF AND PERCENT DIFFERENTIAL ZONES OF PROTECTION

This protection is often applied to transformers having impedance-grounded wye windings. The element may also be applied to the stator winding of a generator having the neutral point grounded with a CT installed in the grounding path, or the ground current obtained by external summation of the neutral-side stator CTs. The next diagram explains the basic application and wiring rules.

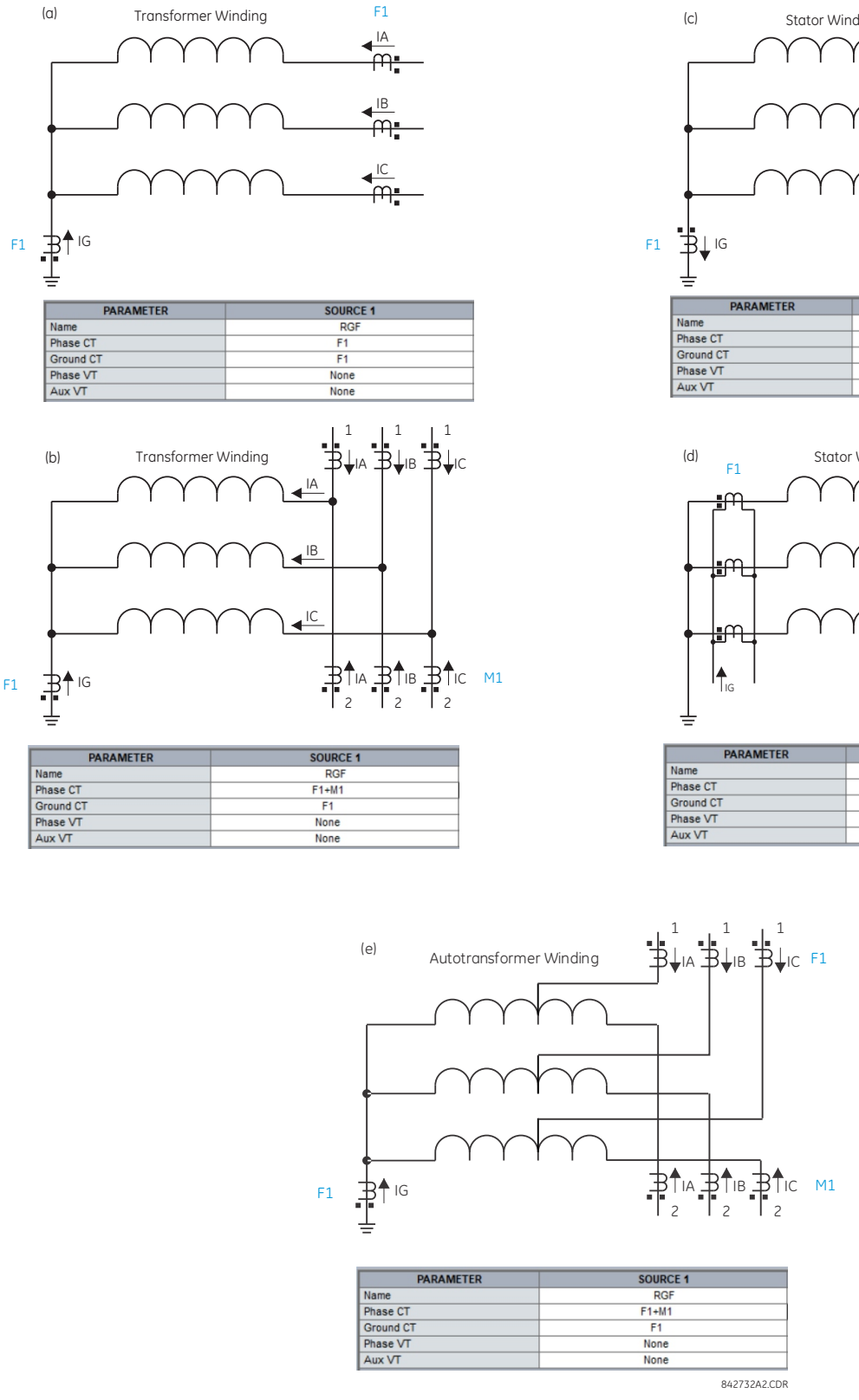

PARAMETER	SOURCE 1
Name	RGF
Phase CT	F1
Ground CT	F1
Phase VT	None
Aux VT	None

PARAMETER	SOURCE 1
Name	RGF
Phase CT	F1
Ground CT	F1
Phase VT	None
Aux VT	None

PARAMETER	SOURCE 1
Name	RGF
Phase CT	F1+M1
Ground CT	F1
Phase VT	None
Aux VT	None

PARAMETER	SOURCE 1
Name	RGF
Phase CT	M1
Ground CT	F1
Phase VT	None
Aux VT	None

PARAMETER	SOURCE 1
Name	RGF
Phase CT	F1+M1
Ground CT	F1
Phase VT	None
Aux VT	None

842732A2.CDR

Figure 5–96: TYPICAL APPLICATIONS OF RGF PROTECTION

The next figures show distribution of the ground fault current through the grounded neutral point of the wye winding and primary delta winding as a function of the fault location as a percentage of the whole wye winding. Magnitude of the transformer winding fault is controlled by several factors, such as supply source impedance, wye winding neutral grounding impedance, transformer leakage reactance, fault voltage windings connection and position of the fault on the winding with respect to the neutral point.

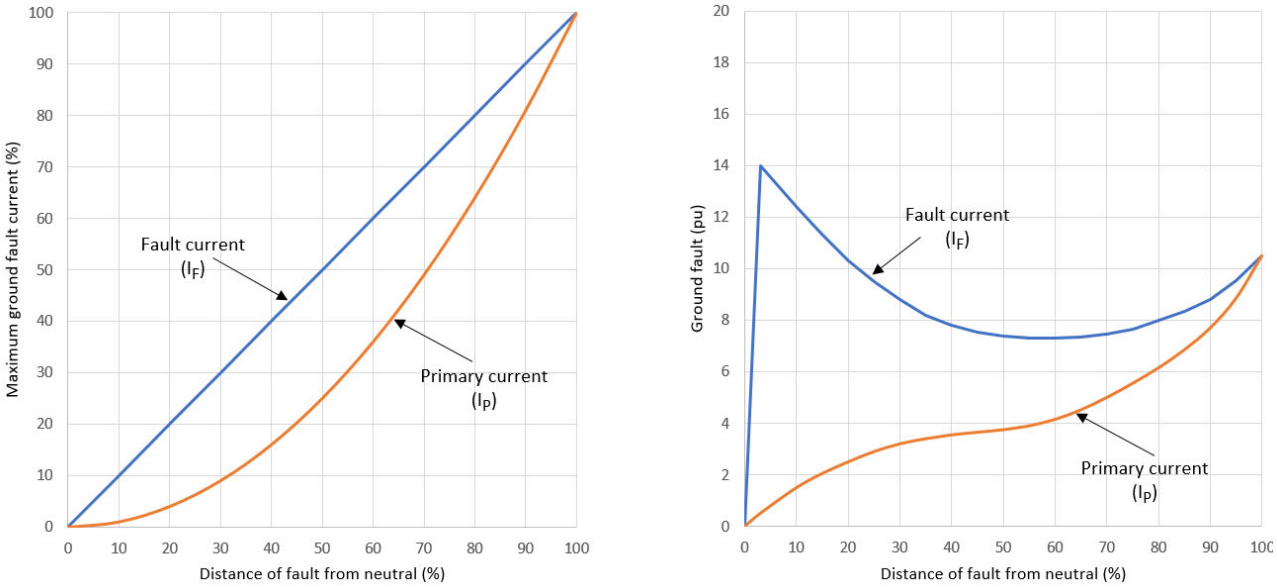

Figure 5–97: FAULT CURRENT THROUGH TRANSFORMER NEUTRAL AGAINST PRIMARY CURRENT (LEFT IS RESISTANCE-GROUND NEUTRAL, RIGHT IS SOLIDLY GROUNDED NEUTRAL)

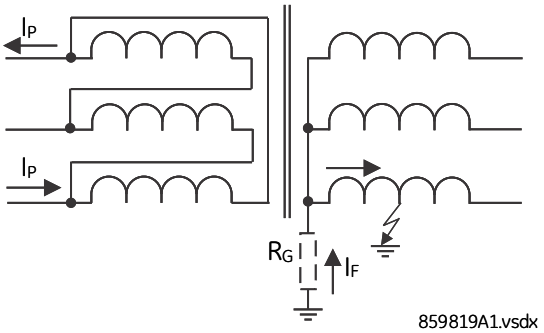

Figure 5–98: FAULT CURRENT THROUGH TRANSFORMER NEUTRAL AGAINST PRIMARY CURRENT (WINDING CURRENT FLOW DURING GROUND FAULT)

The settings are as follows.

RESTD GND FT1 SOURCE — Identifies the signal source for the restricted ground fault (RGF) function. It is important that source includes a set of three-phase CTs on the line side of the wye winding of the transformer assigned to the Phase CT setting of this source and a neutral point CT assigned to the Ground CT setting of this source. In case of more breaker-and-a-half connections on the line side of the transformer or autotransformer application, Phase CT arrangement need to include the sum of CT banks contributing to the differential signal. When the summed CTs have a different ratio, the relay automatically re-scales to the maximum CT primary nominal value.

RESTD GND FT1 PICKUP — Defines the minimum ground differential current required for operation. The relay automatically matches the CT ratios between the phase and ground CTs by re-scaling the ground CT to the phase CT level, which becomes a base value for the differential and restraint currents. For example, for 10 MVA, 33 kV to 11 kV transformer, 10% impedance, D / Y-1, R_G = 6.3Ω, with Phase CT ratio = 600 / 1 A.

Maximum phase-to-ground fault current IG_{MAX} = 11 kV / ($\sqrt{3}$ × 6.3Ω) = 1000 A primary.

For a winding fault point at 5% distance from the neutral:

IG_{PKP} = 0.05 x IG_{MAX} = 0.05 x 1000 = 50 A primary. The pickup setting is chosen as PKP = 50 A / 600 A = 0.083 pu

Note that for correct operation of the element, the **CURRENT CUTOFF** setting under Display Properties has to be set at least two times less than the **PICKUP** setting.

RESTD GND FT1 SLOPE — Defines the restrain characteristics for this element. Set the slope to provide extra restraint for external faults, but not prevent operation for the winding fault during heavy transformer load. Transformer nominal winding current is $I_{N(W)}$ = 10 MVA / ($\sqrt{3}$ × 11 kV) = 525 A = 525 A / 600 A = 0.875 pu. Considering that RGF algorithm restraint is defined by the positive-sequence current during load, and for currents below 2 pu restraint is equal to I1/8, slope can be estimated as follows:

Slope = PKP / (1.2 x $I_{N(W)}$ / 8) x 100% = 0.083 pu / (1.2 x 0.875 / 8) x 100% = 63%

where 1.2 factor accounts for 20% temporary overload of the transformer

Because the final slope has to be set lower than this calculated value to have some safety margin, the final setting can be selected as 43%.

RESTD GND FT1 PICKUP DELAY — Defines element delay from the pickup to assertion of the RESTD GND FT1 OP operand.

RESTD GND FT1 RESET DELAY — Defines how long the RESTD GND FT1 OP operand stays asserted after pickup conditions disappear.

The relay incorporates low-impedance restricted ground fault protection. This low-impedance form of protection faces potential stability problems. An external phase-to-phase fault is an ultimate case. Ideally, there is neither ground (IG) nor neutral (IN = IA + IB + IC) current present. If one or more of the phase CTs saturate, a spurious neutral current is seen by the relay. This is similar to a single infeed situation and may be mistaken for an internal fault. Similar difficulties occur in a breaker-and-a-half application of the restricted ground fault, where any through fault with a weak infeed from the winding itself may cause problems.

The UR uses a novel definition of the restraining signal to cope with the above stability problems while providing for fast and sensitive protection. Even with the improved definition of the restraining signal, the breaker-and-a-half application of the restricted ground fault must be approached with care, and is not recommended unless the settings are carefully selected to avoid maloperation due to CT saturation.

The differential current is produced as an unbalance current between the ground current of the neutral CT (IG) and the neutral current derived from the phase CTs (IN = IA + IB + IC):

$$Igd = |IG + IN| = |IG + IA + IB + IC| \quad \textbf{(EQ 5.18)}$$

The restraining signal ensures stability of protection during CT saturation conditions and is produced as a maximum value among three components related to zero, negative, and positive-sequence currents of the three phase CTs as follows:

$$Irest = \max(IR0, IR1, IR2) \quad \textbf{(EQ 5.19)}$$

The zero-sequence component of the restraining signal (IR0) is meant to provide maximum restraint during external ground faults, and therefore is calculated as a vectorial difference of the ground and neutral currents:

$$IR0 = |IG - IN| = |IG - (IA + IB + IC)| \quad \textbf{(EQ 5.20)}$$

The equation above brings an advantage of generating the restraining signal of twice the external ground fault current, while reducing the restraint below the internal ground fault current. The negative-sequence component of the restraining signal (IR2) is meant to provide maximum restraint during external phase-to-phase faults and is calculated as follows:

$$IR2 = |I\_2| \quad \text{or} \quad IR2 = 3 \times |I\_2| \quad \textbf{(EQ 5.21)}$$

Following complete de-energization of the windings (all three phase currents below 5% of nominal for at least five cycles), the relay uses a multiplier of 1 in preparation for the next energization. The multiplier of 3 is used during normal operation; that is, two cycles after the winding has been energized. The lower multiplier is used to ensure better sensitivity when energizing a faulty winding.

The positive-sequence component of the restraining signal (IR1) is adaptive and provides restraint during symmetrical conditions, either symmetrical faults or load.

Additionally, the algorithm detects a long-lasting DC during energization, which can saturate line CTs and increase IR1. Long lasting DC in phase A (same in other two phases) is estimated with the following condition:

$$DC\_A = |I\_A_{RMS} - 9 \times I\_A_{MAG} / 8| > 0 \quad \textbf{(EQ 5.22)}$$

When this condition is satisfied in any phase for three cycles, DC_{ACTIVE} is set and is reset in 60 cycles once the condition disappears. Overall IR1 is calculated according to the following algorithm:

IF $|I\_1| > 2$ pu AND $|I\_1| > |I\_0|$, THEN $IR1 = 3 \times (I\_1_{MAG} - I\_0_{MAG})$

IF DC_{ACTIVE} THEN $IR1 = I\_1_{MAG} / 2$

OTHERWISE $IR1 = I\_1_{MAG} / 8$

During an external fault involving ground when positive-sequence current exceeds 200% of the phase CT nominal and positive-sequence current exceeds zero-sequence current, IR1 restraint is set to the maximum value. During energization with the long-lasting DC, IR1 is set to half of the positive-sequence current to ensure extra restraint. If none of two conditions are present, then IR1 is set to the minimum value of the 1/8 of the positive-sequence current to ensure sensitivity during load conditions.

The raw restraining signal (Irest) is further post-filtered for better performance during external faults with heavy CT saturation and for better switch-off transient control:

$$Igr(k) = \max(Irest(k), \alpha \times Igr(k-1)) \quad \textbf{(EQ 5.23)}$$

where k represents a present sample, k – 1 represents the previous sample, and α is a factory constant ($\alpha < 1$). The equation above introduces a decaying memory to the restraining signal. Should the raw restraining signal (Irest) disappear or drop significantly, such as when an external fault gets cleared or a CT saturates heavily, the actual restraining signal (Igr(k)) will not reduce instantly but will keep decaying decreasing its value by 50% each 15.5 power system cycles.

For additional security, the element applies a ground current of the transformer neutral CT (IG) supervision by allowing element pickup and operation when the IG magnitude is above 0.8 x Pickup setting.

Having the differential and restraining signals developed, the element applies a single slope differential characteristic with a minimum pickup as shown in the logic diagram below.

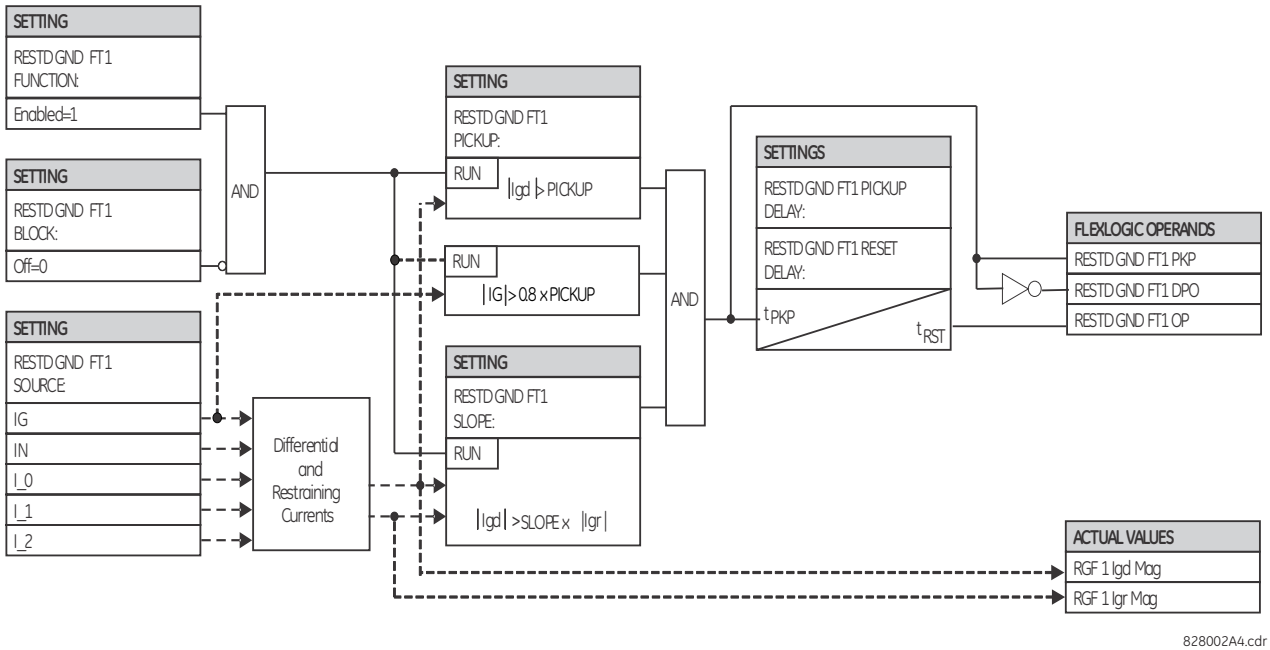

Figure 5–99: RESTRICTED GROUND FAULT SCHEME LOGIC

The following examples explain how the restraining signal is created for maximum sensitivity and security. These examples clarify the operating principle and provide guidance for testing of the element.

EXAMPLE 1: EXTERNAL SINGLE-LINE-TO-GROUND FAULT

Given the following inputs: IA = 1 pu ∠0°, IB = 0, IC = 0, and IG = 1 pu ∠180°

The relay calculates the following values:

$$Igd = 0,\ IR0 = abs\left(3 \times \frac{1}{3} - (-1)\right) = 2\ pu,\ IR2 = 3 \times \frac{1}{3} = 1\ pu,\ IR1 = \frac{1/3}{8} = 0.042\ pu,\ \text{and } Igr = 2\ pu$$

The restraining signal is twice the fault current. This gives extra margin should the phase or neutral CT saturate.

EXAMPLE 2: EXTERNAL HIGH-CURRENT SLG FAULT

Given the following inputs: IA = 10 pu ∠0°, IB = 0, IC = 0, and IG = 10 pu ∠–180°

The relay calculates the following values:

$$Igd = 0,\ IR0 = abs\left(3 \times \frac{1}{3} - (-10)\right) = 20\ pu,\ IR2 = 3 \times \frac{10}{3} = 10\ pu,\ IR1 = 3 \times \left(\frac{10}{3} - \frac{10}{3}\right) = 0,\ \text{and } Igr = 20\ pu.$$

EXAMPLE 3: EXTERNAL HIGH-CURRENT THREE-PHASE SYMMETRICAL FAULT

Given the following inputs: IA = 10 pu ∠0°, IB = 10 pu ∠–120°, IC = 10 pu ∠120°, and IG = 0 pu

The relay calculates the following values:

$$Igd = 0,\ IR0 = abs(3 \times 0 - (0)) = 0\ pu,\ IR2 = 3 \times 0 = 0\ pu,\ IR1 = 3 \times \left(\frac{10}{3} - 0\right) = 10\ pu,\ \text{and } Igr = 10\ pu.$$

EXAMPLE 4: INTERNAL LOW-CURRENT SINGLE-LINE-TO-GROUND FAULT UNDER FULL LOAD

Given the following inputs: IA = 1.10 pu ∠0°, IB = 1.0 pu ∠–120°, IC = 1.0 pu ∠120°, and IG = 0.05 pu ∠0°

The relay calculates the following values:

I_0 = 0.033 pu ∠0°, I_2 = 0.033 pu ∠0°, and I_1 = 1.033 pu ∠0°

Igd = abs(3 × 0.0333 + 0.05) = 0.15 pu, IR0 = abs(3 × 0.033 – (0.05)) = 0.05 pu, IR2 = 3 × 0.033 = 0.10 pu, IR1 = 1.033 / 8 = 0.1292 pu, and Igr = 0.1292 pu

Despite very low fault current level the differential current is above 100% of the restraining current.

5.6.9 NEGATIVE SEQUENCE CURRENT

a) NEGATIVE SEQUENCE DIRECTIONAL OVERCURRENT (ANSI 67Q, IEC PDEF/PTOC)

PATH: SETTINGS ⇨⇩ GROUPED ELEMENTS ⇨ SETTING GROUP 1(6) ⇨⇩ NEGATIVE SEQUENCE CURRENT ⇨⇩ NEG SEQ DIR OC1(2)

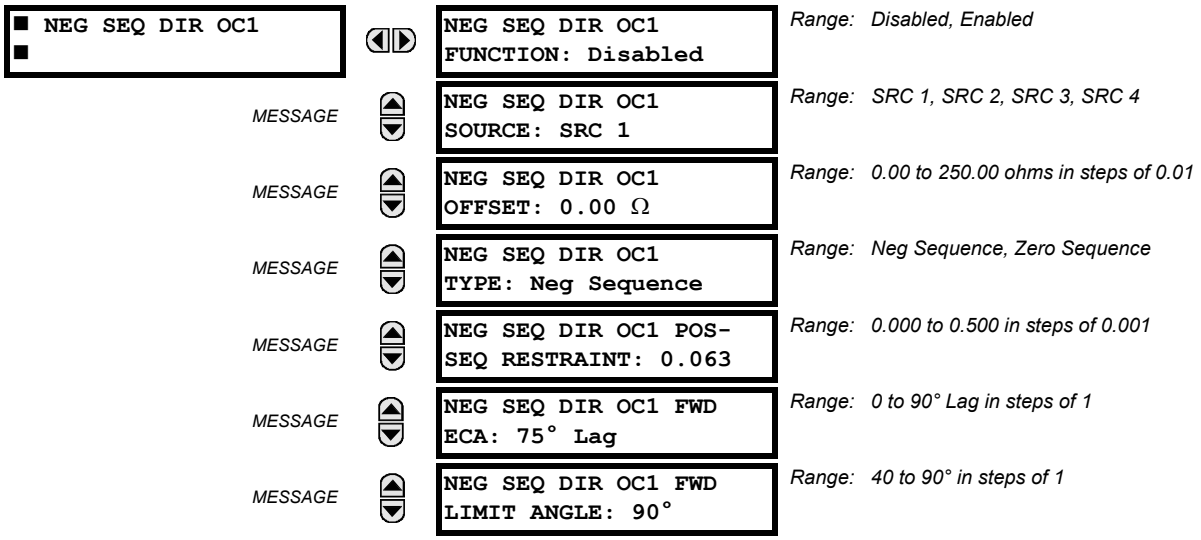

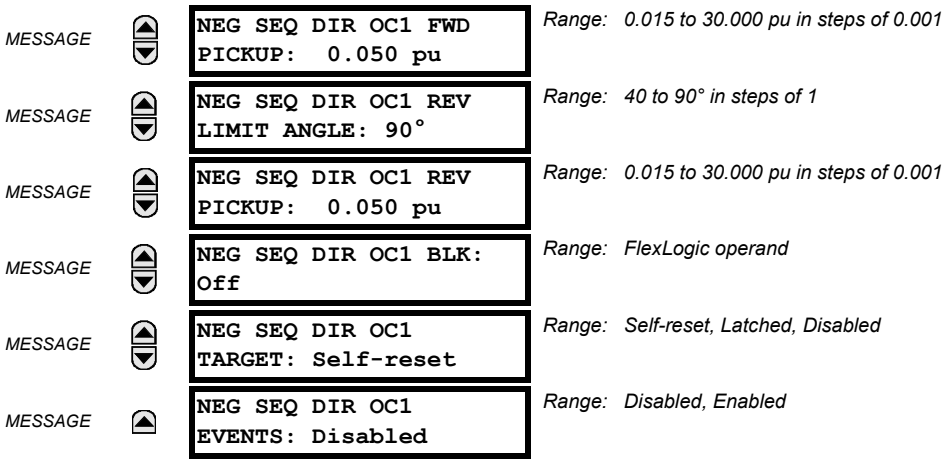

There are two negative-sequence directional overcurrent protection elements available. The element provides both forward and reverse fault direction indications through its output operands NEG SEQ DIR OC1 FWD and NEG SEQ DIR OC1 REV, respectively. The output operand is asserted if the magnitude of the operating current is above a pickup level (overcurrent unit) and the fault direction is seen as *forward* or *reverse*, respectively (directional unit).

The overcurrent unit of the element essentially responds to the magnitude of a fundamental frequency phasor of either the negative-sequence or neutral current as per user selection.

A positive-sequence restraint is applied for better performance: a small user-programmable portion of the positive-sequence current magnitude is subtracted from the negative or zero-sequence current magnitude, respectively, when forming the element operating quantity.

$$I_{op} = |I\_2| - K \times |I\_1| \quad \text{or} \quad I_{op} = 3 \times (|I\_0| - K \times |I\_1|) \qquad \textbf{(EQ 5.24)}$$

The positive-sequence restraint allows for more sensitive settings by counterbalancing spurious negative-sequence and zero-sequence currents resulting from:

- System unbalances under heavy load conditions.
- Transformation errors of current transformers (CTs).
- Fault inception and switch-off transients.

The positive-sequence restraint must be considered when testing for pick-up accuracy and response time (multiple of pickup). The positive-sequence restraint is removed for low currents. If the positive-sequence current is less than 0.8 pu, then the restraint is removed by changing the constant *K* to zero. This results in better response to high-resistance faults when the unbalance is very small and there is no danger of excessive CT errors, since the current is low.

The *operating quantity* depends on the way the test currents are injected into the G60. For single phase injection:

- $I_{op} = ⅓ \times (1 - K) \times I_{injected}$ for I_2 mode.
- $I_{op} = (1 - K) \times I_{injected}$ for I_0 mode if I_1 > 0.8 pu.

The *directional unit* uses the negative-sequence current (I_2) and negative-sequence voltage (V_2).

The following tables define the negative-sequence directional overcurrent element.

Table 5–33: NEGATIVE-SEQUENCE DIRECTIONAL OVERCURRENT UNIT

MODE	OPERATING CURRENT
Negative-sequence	$I_{op} = \|I\_2\| - K \times I\_1\|$
Zero-sequence	$I_{op} = 3 \times (\|I\_0\| - K \times \|I\_1\|)$ if $\|I\_1\| > 0.8$ pu $I_{op} = 3 \times \|I\_0\|$ if $\|I\_1\| \le 0.8$ pu

Table 5–34: NEGATIVE-SEQUENCE DIRECTIONAL UNIT

DIRECTION	COMPARED PHASORS	
Forward	$-V\_2 + Z\_offset \times I\_2$	$I\_2 \times 1\angle ECA$
Reverse	$-V\_2 + Z\_offset \times I\_2$	$-(I\_2 \times 1\angle ECA)$

Z_offset is the offset impedance, for which magnitude is the OFFSET setting and angle is the FWD ECA.

The negative-sequence voltage must be greater than **PRODUCT SETUP ⇨⇩ DISPLAY PROPERTIES ⇨⇩ VOLTAGE CUT-OFF LEVEL** to be validated for use as polarizing signal. Additionally, when offset impedance is applied and negative-sequence current is above 0.2 pu, compensated negative-sequence voltage -V_2 + Z_offset x I_2 has to be above 0.02 pu in order to discriminate fault direction; otherwise when negative-sequence current is less than 0.2 pu, -V_2 is then used as the polarizing signal. If the polarizing signal is not validated, neither forward nor reverse indication is given. The following figure explains the usage of the voltage polarized directional unit of the element. It shows the phase angle comparator characteristics for a phase A to ground fault, with settings of

ECA = 75° (element characteristic angle = centerline of operating characteristic)
FWD LA = 80° (forward limit angle = ± the angular limit with the ECA for operation)
REV LA = 80° (reverse limit angle = ± the angular limit with the ECA for operation)

The element incorporates a current reversal logic: if the reverse direction is indicated for at least 1.25 of a power system cycle, the prospective forward indication will be delayed by 1.5 of a power system cycle. The element is designed to emulate an electromechanical directional device. Larger operating and polarizing signals will result in faster directional discrimination bringing more security to the element operation.

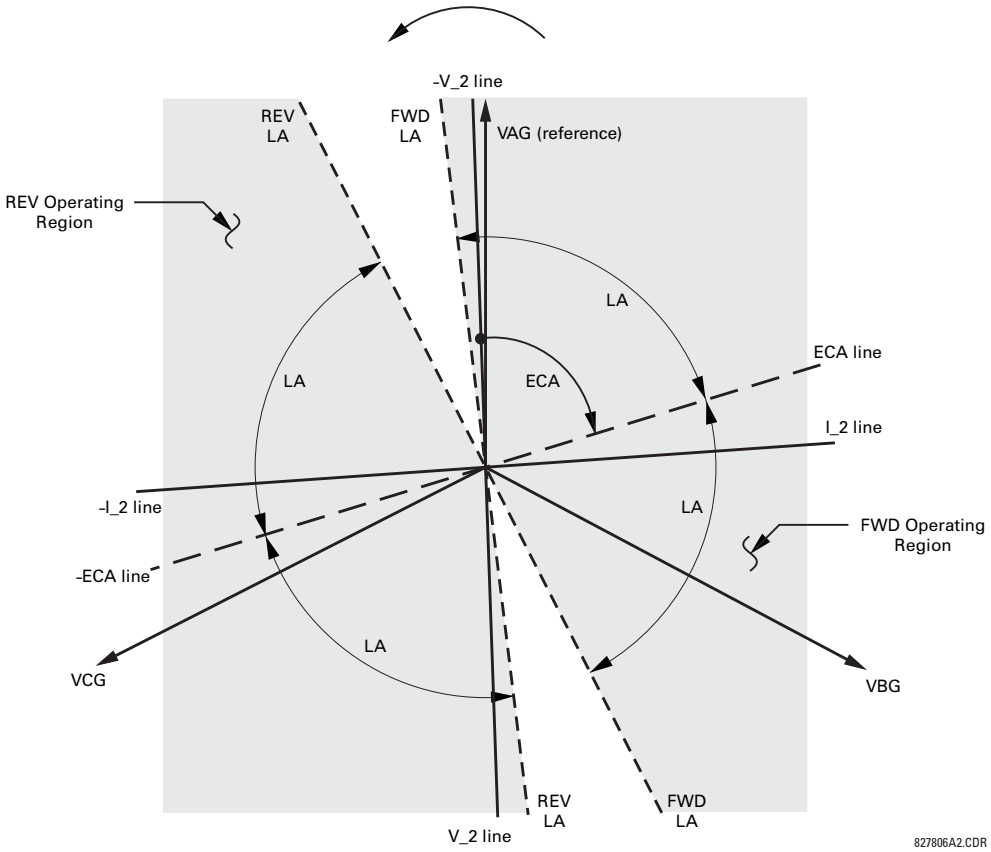

Figure 5–100: NEGATIVE-SEQUENCE DIRECTIONAL CHARACTERISTIC

The forward-looking function is designed to be more secure as compared to the reverse-looking function, and therefore should be used for the tripping direction. The reverse-looking function is designed to be faster as compared to the forward-looking function and should be used for the blocking direction. This allows for better protection coordination. Take this bias

into account when using the negative-sequence directional overcurrent element to directionalize other protection elements. The negative-sequence current must be greater than the **PRODUCT SETUP ⇨⇩ DISPLAY PROPERTIES ⇨⇩ CURRENT CUT-OFF LEVEL** setting value.

- **NEG SEQ DIR OC1 OFFSET:** This setting specifies the offset impedance used by this protection. The primary application for the offset impedance is to guarantee correct identification of fault direction on series compensated lines (see the Application of Settings chapter for information on how to calculate this setting). In regular applications, the offset impedance ensures proper operation even if the negative-sequence voltage at the relaying point is very small. If this is the intent, the offset impedance shall not be larger than the negative-sequence impedance of the protected circuit. Practically, it is several times smaller. The offset impedance is entered in secondary ohms. See the Theory of Operation chapter for additional details.
- **NEG SEQ DIR OC1 TYPE:** This setting selects the operating mode for the overcurrent unit of the element. The choices are “Neg Sequence” and “Zero Sequence”. In some applications it is advantageous to use a directional negative-sequence overcurrent function instead of a directional zero-sequence overcurrent function as inter-circuit mutual effects are minimized.
- **NEG SEQ DIR OC1 POS-SEQ RESTRAINT**: This setting controls the positive-sequence restraint. Set to 0.063 (in “Zero Sequence” mode) or 0.125 (in “Neg Sequence” mode) for backward compatibility with revisions 3.40 and earlier. Set to zero to remove the restraint. Set higher if large system unbalances or poor CT performance are expected.
- **NEG SEQ DIR OC1 FWD ECA:** This setting select the element characteristic angle (ECA) for the forward direction. The element characteristic angle in the reverse direction is the angle set for the forward direction shifted by 180°.
- **NEG SEQ DIR OC1 FWD LIMIT ANGLE:** This setting defines a symmetrical (in both directions from the ECA) limit angle for the forward direction.
- **NEG SEQ DIR OC1 FWD PICKUP:** This setting defines the pickup level for the overcurrent unit in the forward direction. Upon **NEG SEQ DIR OC1 TYPE** selection, this pickup threshold applies to zero- or negative-sequence current. When selecting this setting it must be kept in mind that the design uses a *positive-sequence restraint* technique.
- **NEG SEQ DIR OC1 REV LIMIT ANGLE:** This setting defines a symmetrical (in both directions from the ECA) limit angle for the reverse direction.
- **NEG SEQ DIR OC1 REV PICKUP:** This setting defines the pickup level for the overcurrent unit in the reverse direction. Upon **NEG SEQ DIR OC1 TYPE** selection, this pickup threshold applies to zero- or negative-sequence current. When selecting this setting it must be kept in mind that the design uses a *positive-sequence restraint* technique.

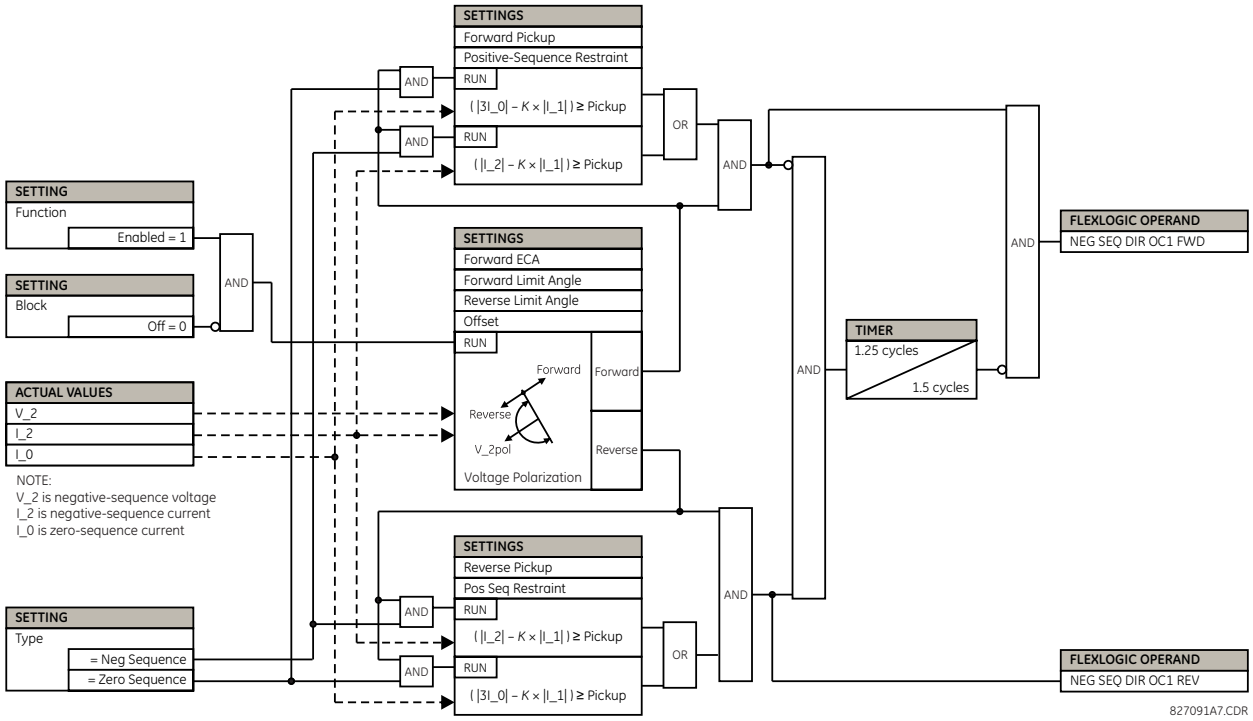

Figure 5–101: NEGATIVE SEQUENCE DIRECTIONAL OC1 SCHEME LOGIC

PATH: SETTINGS ⇨⇩ GROUPED ELEMENTS ⇨ SETTING GROUP 1(6) ⇨⇩ GENERATOR UNBALANCE

■ GENERATOR ■ UNBALANCE		GENERATOR UNBAL FUNCTION: Disabled	Range: Disabled, Enabled
	MESSAGE	GEN UNBAL SOURCE: SRC 1	Range: SRC 1, SRC 2, SRC 3, SRC 4
	MESSAGE	GEN UNBAL INOM: 0.800 pu	Range: 0.000 to 1.250 pu in steps of 0.001
	MESSAGE	GEN UNBAL STG1 PICKUP: 8.00%	Range: 0.00 to 100.00% in steps of 0.01
	MESSAGE	GEN UNBAL STG1 K-VALUE: 1.00	Range: 0.00 to 100.00 in steps of 0.01
	MESSAGE	GEN UNBAL STG1 TMIN: 0.250 s	Range: 0.000 to 50.000 s in steps of 0.001
	MESSAGE	GEN UNBAL STG1 TMAX: 600.00 s	Range: 0.0 to 1000.0 s in steps of 0.1
	MESSAGE	GEN UNBAL STG1 K-RESET: 240.00 s	Range: 0.0 to 1000.0 s in steps of 0.1
	MESSAGE	GEN UNBAL STG2 PICKUP: 3.0%	Range: 0.00 to 100.00% in steps of 0.01
	MESSAGE	GEN UNBAL STG2 PKP DELAY: 5.0 s	Range: 0.0 to 1000.0 s in steps of 0.1
	MESSAGE	GEN UNBAL BLK: Off	Range: FlexLogic operand
	MESSAGE	GEN UNBAL TARGET: Self-Reset	Range: Self-reset, Latched, Disabled
	MESSAGE	GEN UNBAL EVENTS: Disabled	Range: Enabled, Disabled

The generator unbalance element protects the machine from rotor damage due to excessive negative-sequence current. The element has an inverse time stage which is typically used for tripping and a definite time stage typically used for alarm purposes. The inverse time stage operating characteristic is defined by the following equation:

$$T = \frac{K}{(I_2/I_{nom})^2}$$

where I_{nom} is the generator rated current and K is the negative-sequence capability constant normally provided by the generator manufacturer.

- **GEN UNBAL INOM:** This setting is the rated full load current of the machine.
- **GEN UNBAL STG1 PICKUP:** This setting defines the pickup of the stage 1 element expressed as a percentage of the nominal current as specified by **GEN UNBAL INOM** setting. It is typically set at the maximum continuous negative sequence current rating of the machine.
- **GEN UNBAL STG1 K-VALUE:** This setting is the negative sequence capability constant. This value is normally provided by the generator manufacturer (refer to ANSI C50.13 for details).
- **GEN UNBAL STG1 TMIN:** This is the minimum operate time of the stage 1 element. The stage will not operate before this time expires. This is set to prevent false trips for faults that would be cleared normally by system protections.
- **GEN UNBAL STG1 TMAX:** This is the maximum operate time of the stage 1 element. This setting can be applied to limit the maximum tripping time for low level unbalances.

- **GEN UNBAL STG1 K-RESET:** This setting defines the linear reset rate of the stage 1 element. It is the maximum reset time from the threshold of tripping. This feature provides a thermal memory of previous unbalance conditions.
- **GEN UNBAL STG2 PICKUP:** This setting defines the pickup of the stage 2 element expressed as a percentage of the nominal current as specified by **GEN UNBAL INOM** setting. The definite time element would normally be used to generate an alarm to prompt an operator to take some corrective action. The stage 2 element would typically be set at a safe margin below the stage 1 pickup setting.
- **GEN UNBAL STG2 PKP DELAY:** This is the minimum operate time of the stage 2 element. This is set to prevent nuisance alarms during system faults.

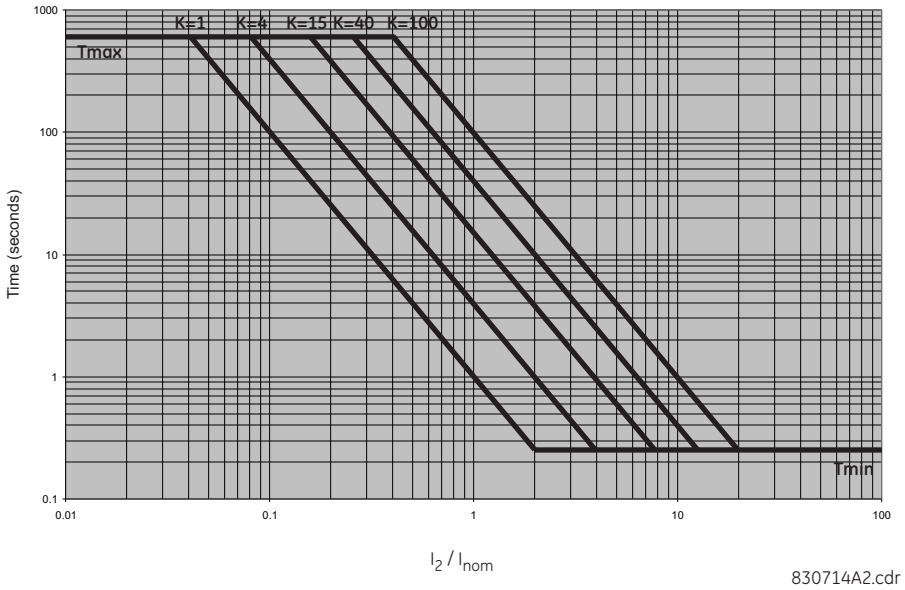

Figure 5–102: GENERATOR UNBALANCE INVERSE TIME CURVES

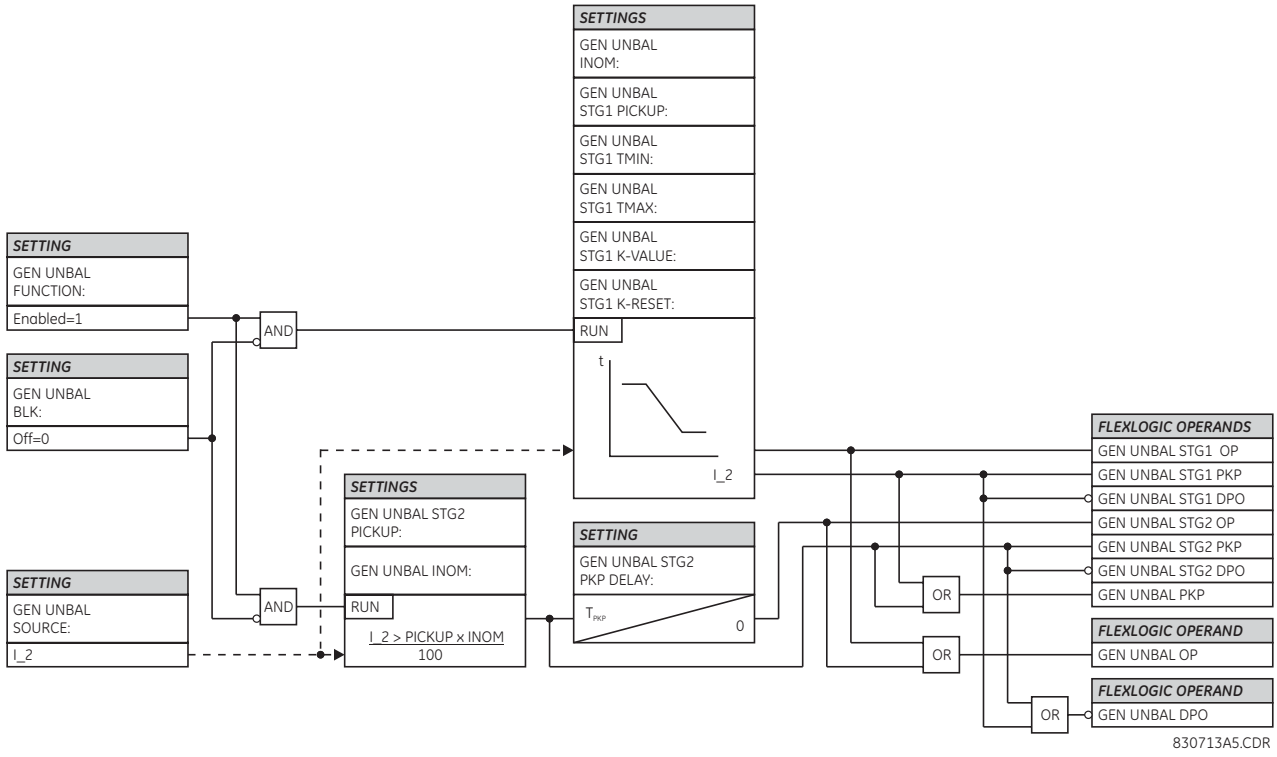

Figure 5–103: GENERATOR UNBALANCE SCHEME LOGIC

5.6.11 SPLIT PHASE PROTECTION (ANSI 50SP)

PATH: SETTINGS ⇨⇩ GROUPED ELEMENTS ⇨ SETTING GROUP 1(6) ⇨⇩ SPLIT PHASE

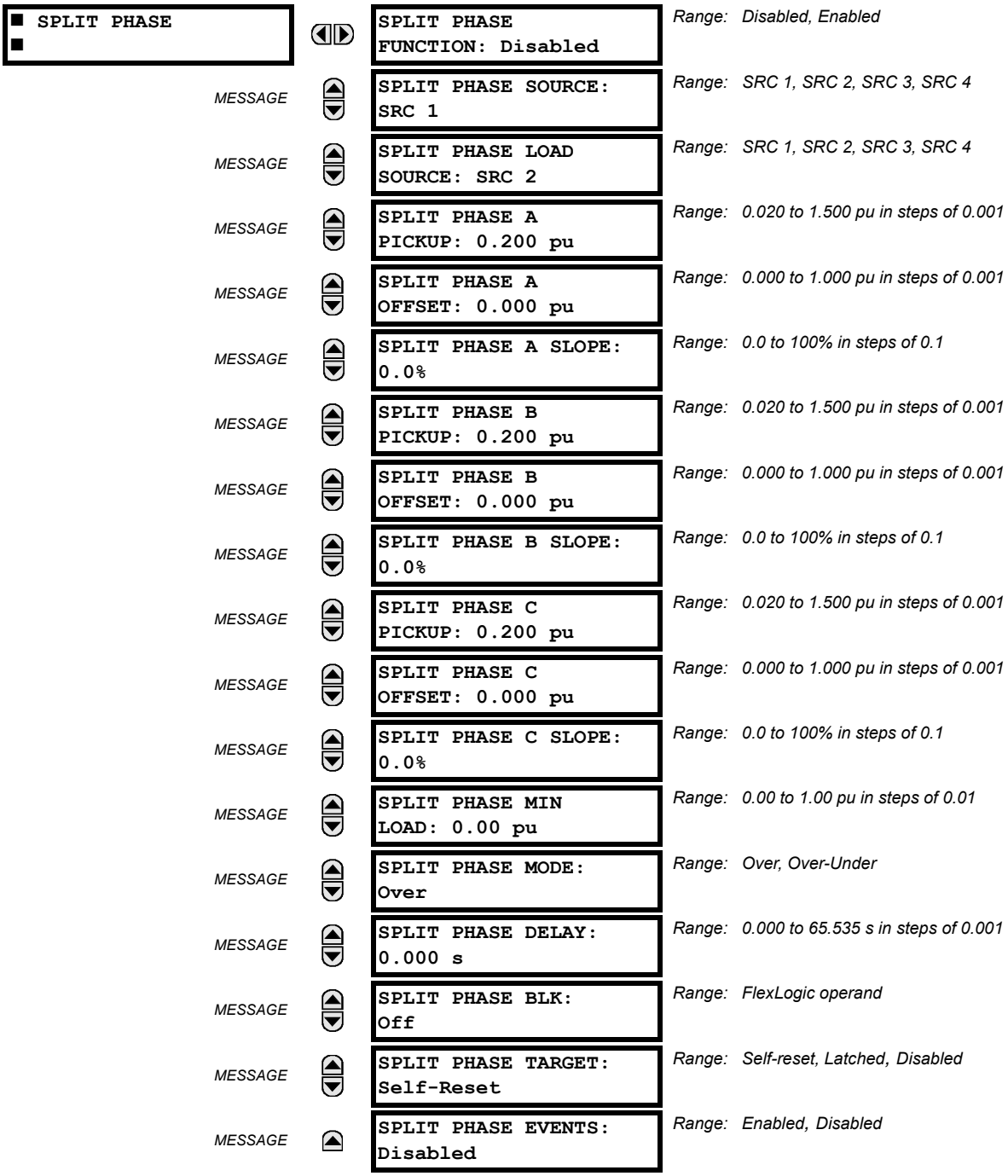

Some generators, due to physical construction, have windings that consist of multiple adjacent turns. It is therefore possible for faults to develop between turns on the same phase (inter-turn faults). These faults are not detected by the stator differential protection, as there is no difference between the neutral and at the terminal currents. Split phase protection may be applied to detect inter-turn faults in the case that the generator is wound with two three-phase windings, each brought separately out of the machine and connected in parallel. The currents in the two windings are compared, any difference indicating an inter-turn fault.

The split phase element allows a separate pickup setting to be applied for each phase. Additionally, the pickup can be biased by the load current (slope characteristic). Two modes of operation are supported (over and over-under).

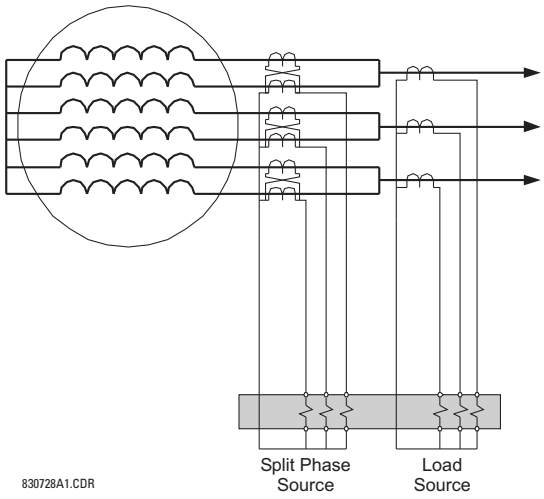

Figure 5–104: SPLIT PHASE PROTECTION FOR 2 CTS

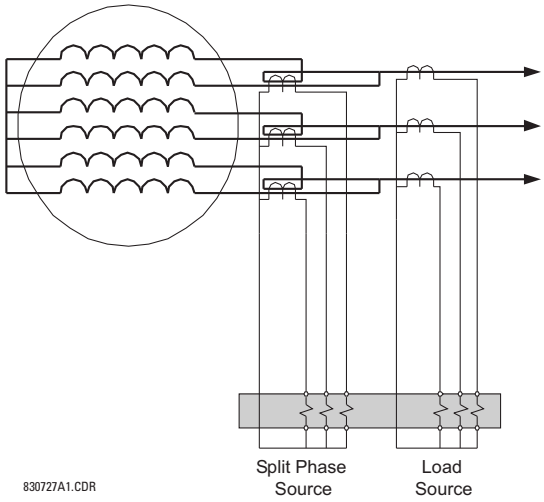

Figure 5–105: SPLIT PHASE PROTECTION FOR 1 CT

The split phase element principle of operation is as follows. First, define the following parameters:

I_{split}: split-phase current, I_{load}: load current, pickup: pickup setting, min_load: minimum load supervision setting

Then, the expected value of the steady state unbalance (defined as bias current) is expressed as follows:

$$I_{bias} = \text{slope} \times I_{load} + \text{offset} \quad \textbf{(EQ 5.25)}$$

where:

$$\text{slope} = \frac{I_{split}}{I_{load}} \times \frac{\text{Load CT Primary}}{\text{Load CT Secondary}} \times \frac{\text{Split Phase CT Secondary}}{\text{Split Phase CT Primary}} \quad \textbf{(EQ 5.26)}$$

and offset is the split phase current at no-load. In “Over” mode, the element will pickup if:

$$(I_{split} - I_{bias} > \text{pickup}) \quad \text{and} \quad (I_{load} \geq \text{min\_load}) \quad \textbf{(EQ 5.27)}$$

In “Over-under”, mode, the element will pickup if:

$$(|I_{split} - I_{bias}| > \text{pickup}) \quad \text{and} \quad (I_{load} \geq \text{min\_load}) \qquad \textbf{(EQ 5.28)}$$

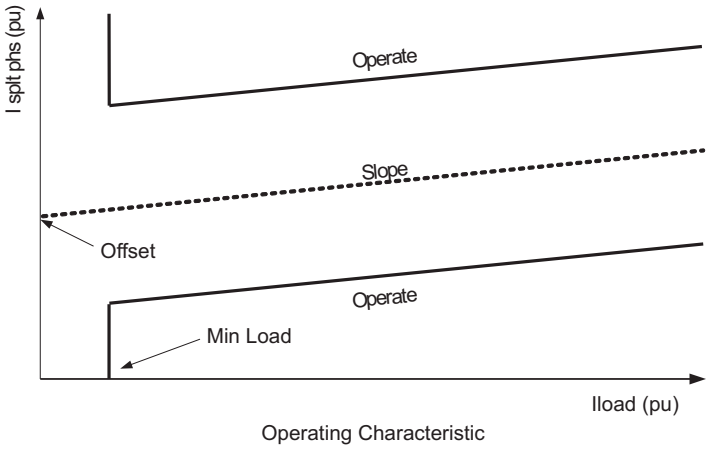

Operating Characteristic

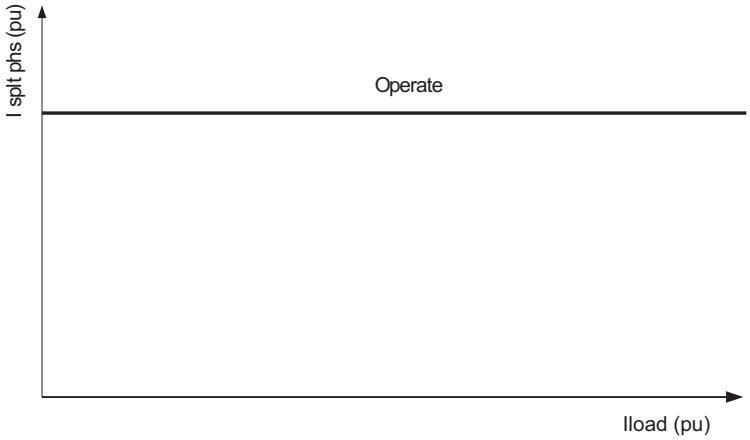

Operating Characteristic (mode = over, Min Load = 0, Slope = 0)

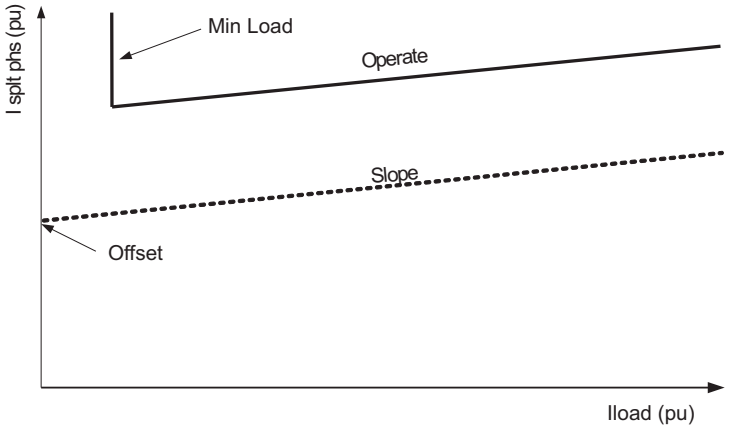

Operating Characteristic (mode = over)

830729A1.CDR

Figure 5–106: SPLIT PHASE PROTECTION OPERATING CHARACTERISTICS

- **SPLIT PHASE FUNCTION**: This setting enables and disables the function.
- **SPLIT PHASE SOURCE**: This setting specifies a signal source used to provide current from the split phase CT to the split phase protection.
- **SPLIT PHASE LOAD SOURCE**: This setting specifies a signal source used to provide current from the load CT to the split phase protection.
- **SPLIT PHASE A(C) PICKUP**: This setting specifies a pickup level for each phase. This should be set less than the minimum expected unbalance (split phase) current due to an inter-turn fault.
- **SPLIT PHASE A(C) OFFSET**: This setting specifies the steady-state split phase current at no-load for the each phase. This should be set equal to the split phase current during normal (unfaulted) operation. The user should assign the split phase current and the load current (positive sequence) to the data logger to identify the optimum value for this setting.
- **SPLIT PHASE A(C) SLOPE**: This setting specifies the slope of split phase characteristic for each phase. This setting is used to bias the pickup of the element due to variations in generator loading. The slope is defined as the ratio of the per-unit split phase current over the per-unit load current. The user should assign the split phase current and the load current (positive sequence) to the data logger to identify the optimum value for this setting.
- **SPLIT PHASE MIN LOAD**: This setting specifies the minimum load (positive-sequence current) supervision level.
- **SPLIT PHASE MODE**: This setting specifies the mode of operation. If the “Over” mode is chosen, the element will pickup when the split phase current is rises above the biased offset current plus the pickup setting. If “Over-under” mode is chosen, the element will also pickup if the split phase current is falls below the biased offset current minus the pickup setting. See the earlier description for further details.
- **SPLIT PHASE DELAY**: This setting specifies a time delay required to operate after the pickup condition is established. During an external disturbance the CTs may saturate. CT saturation can cause a spurious split phase current, especially in the case where the split phase current is derived from the external summation of two split phase CTs (first figure above). In this instance, a time delay can be used to ride through the saturation event. Alternately, the CT saturation flag can also be used to supervise the function.

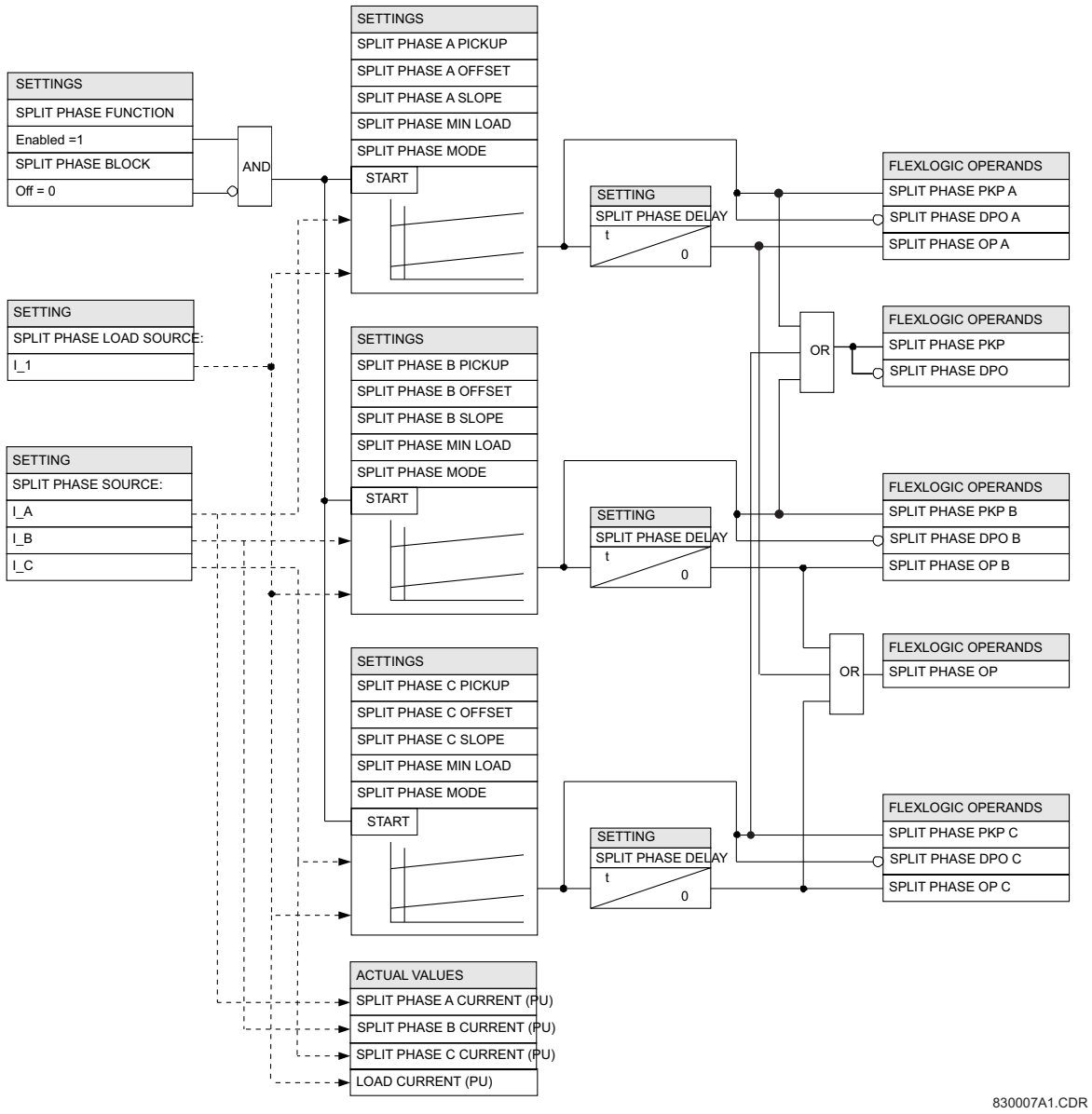

Figure 5–107: SPLIT PHASE PROTECTION LOGIC

PATH: SETTINGS ⇨⇩ GROUPED ELEMENTS ⇨ SETTING GROUP 1(6) ⇨⇩ BREAKER FAILURE ⇨ BREAKER FAILURE 1(4)

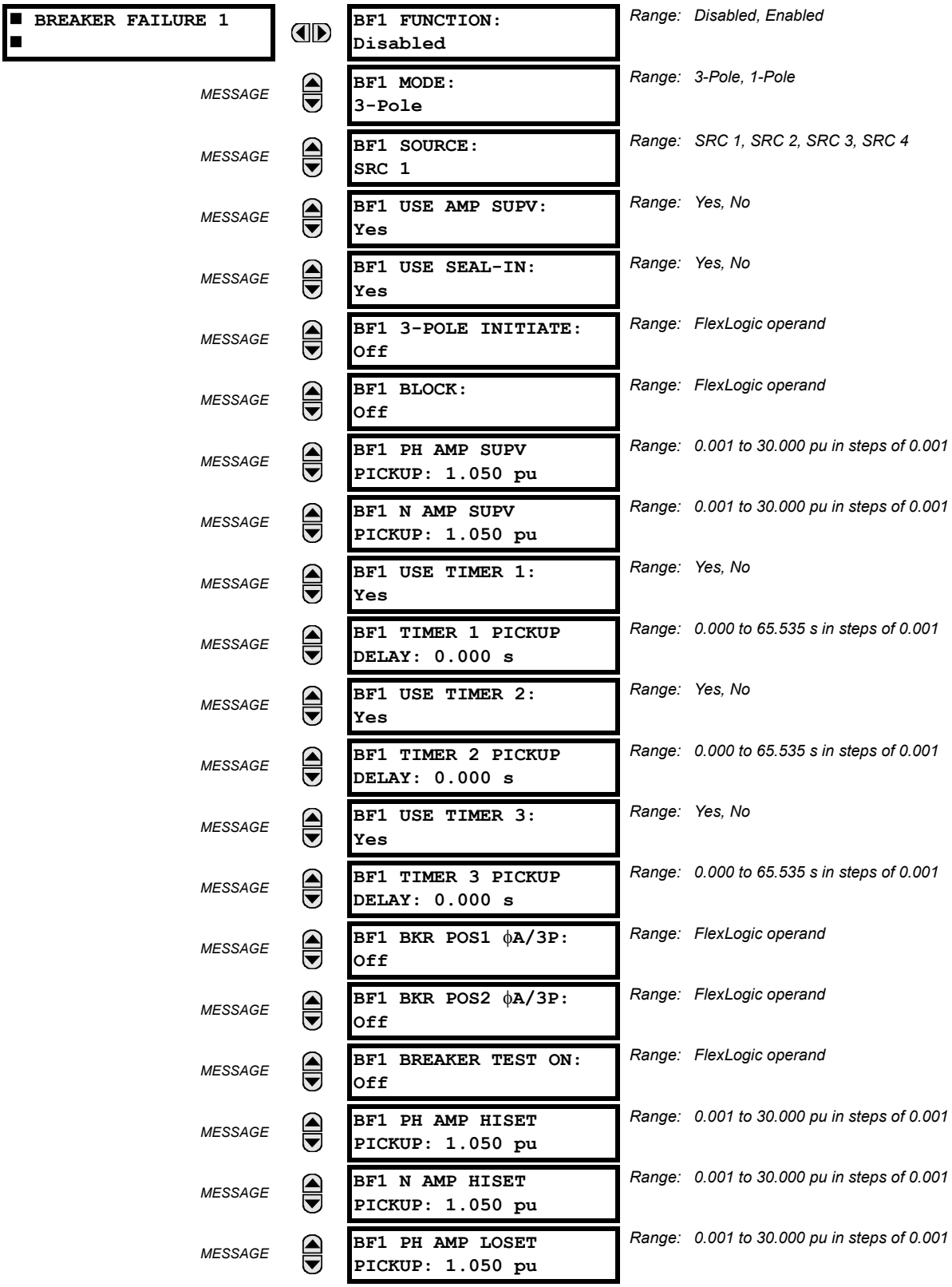

MESSAGE
BF1 N AMP LOSET PICKUP: 1.050 pu
Range: 0.001 to 30.000 pu in steps of 0.001

MESSAGE
BF1 LOSET TIME DELAY: 0.000 s
Range: 0.000 to 65.535 s in steps of 0.001

MESSAGE
BF1 TRIP DROPOUT DELAY: 0.000 s
Range: 0.000 to 65.535 s in steps of 0.001

MESSAGE
BF1 TARGET: Self-reset
Range: Self-reset, Latched, Disabled

MESSAGE
BF1 EVENTS: Disabled
Range: Disabled, Enabled

MESSAGE
BF1 PH A INITIATE: Off
Range: FlexLogic operand
Valid only for 1-Pole breaker failure schemes.

MESSAGE
BF1 PH B INITIATE: Off
Range: FlexLogic operand
Valid only for 1-Pole breaker failure schemes.

MESSAGE
BF1 PH C INITIATE: Off
Range: FlexLogic operand
Valid only for 1-Pole breaker failure schemes.

MESSAGE
BF1 BKR POS1 ϕB Off
Range: FlexLogic operand
Valid only for 1-Pole breaker failure schemes.

MESSAGE
BF1 BKR POS1 ϕC Off
Range: FlexLogic operand
Valid only for 1-Pole breaker failure schemes.

MESSAGE
BF1 BKR POS2 ϕB Off
Range: FlexLogic operand
Valid only for 1-Pole breaker failure schemes.

MESSAGE
BF1 BKR POS2 ϕC Off
Range: FlexLogic operand
Valid only for 1-Pole breaker failure schemes.

In general, a breaker failure scheme determines that a breaker signaled to trip has not cleared a fault within a definite time, so further tripping action must be performed. Tripping from the breaker failure scheme should trip all breakers, both local and remote, that can supply current to the faulted zone. Usually operation of a breaker failure element will cause clearing of a larger section of the power system than the initial trip. Because breaker failure can result in tripping a large number of breakers and this affects system safety and stability, a very high level of security is required.

Two schemes are provided: one for three-pole tripping only (identified by the name “3BF”) and one for three pole plus single-pole operation (identified by the name “1BF”). The philosophy used in these schemes is identical. The operation of a breaker failure element includes three stages: initiation, determination of a breaker failure condition, and output.

INITIATION STAGE

A FlexLogic operand representing the protection trip signal initially sent to the breaker must be selected to initiate the scheme. The initiating signal should be sealed-in if primary fault detection can reset before the breaker failure timers have finished timing. The seal-in is supervised by current level, so it is reset when the fault is cleared. If desired, an incomplete sequence seal-in reset can be implemented by using the initiating operand to also initiate a FlexLogic timer, set longer than any breaker failure timer, whose output operand is selected to block the breaker failure scheme.

Schemes can be initiated either directly or with current level supervision. It is particularly important in any application to decide if a current-supervised initiate is to be used. The use of a current-supervised initiate results in the breaker failure element not being initiated for a breaker that has very little or no current flowing through it, which may be the case for transformer faults. For those situations where it is required to maintain breaker fail coverage for fault levels below the **BF1 PH AMP SUPV PICKUP** or the **BF1 N AMP SUPV PICKUP** setting, a current supervised initiate should *not* be used. This feature should be utilized for those situations where coordinating margins may be reduced when high speed reclosing is used. Thus, if this choice is made, fault levels must always be above the supervision pickup levels for dependable operation of the breaker fail scheme. This can also occur in breaker-and-a-half or ring bus configurations where the first breaker closes into a fault; the protection trips and attempts to initiate breaker failure for the second breaker, which is in the process of closing, but does not yet have current flowing through it.

When the scheme is initiated, it immediately sends a trip signal to the breaker initially signaled to trip (this feature is usually described as re-trip). This reduces the possibility of widespread tripping that results from a declaration of a failed breaker.

DETERMINATION OF A BREAKER FAILURE CONDITION

The schemes determine a breaker failure condition via three *paths*. Each of these paths is equipped with a time delay, after which a failed breaker is declared and trip signals are sent to all breakers required to clear the zone. The delayed paths are associated with breaker failure timers 1, 2, and 3, which are intended to have delays increasing with increasing timer numbers. These delayed paths are individually enabled to allow for maximum flexibility.

Timer 1 logic (early path) is supervised by a fast-operating breaker auxiliary contact. If the breaker is still closed (as indicated by the auxiliary contact) and fault current is detected after the delay interval, an output is issued. Operation of the breaker auxiliary switch indicates that the breaker has mechanically operated. The continued presence of current indicates that the breaker has failed to interrupt the circuit.

Timer 2 logic (main path) is not supervised by a breaker auxiliary contact. If fault current is detected after the delay interval, an output is issued. This path is intended to detect a breaker that opens mechanically but fails to interrupt fault current; the logic therefore does not use a breaker auxiliary contact.

The timer 1 and 2 paths provide two levels of current supervision, high-set and low-set, that allow the supervision level to change from a current that flows before a breaker inserts an opening resistor into the faulted circuit to a lower level after resistor insertion. The high-set detector is enabled after timeout of timer 1 or 2, along with a timer that enables the low-set detector after its delay interval. The delay interval between high-set and low-set is the expected breaker opening time. Both current detectors provide a fast operating time for currents at small multiples of the pickup value. The overcurrent detectors are required to operate after the breaker failure delay interval in case current still flows through the breaker, and they are supervised by a fast reset element described as follows.

Timer 3 logic (slow path) is supervised by a breaker auxiliary contact and a control switch contact used to indicate that the breaker is in or out-of-service, disabling this path when the breaker is out-of-service for maintenance. There is no current level check in this logic as it is intended to detect low magnitude faults and it is therefore the slowest to operate.

OUTPUT

The outputs from the schemes are:

- FlexLogic operands that report on the operation of portions of the scheme
- FlexLogic operand used to re-trip the protected breaker
- FlexLogic operands that initiate tripping required to clear the faulted zone. The trip output can be sealed-in for an adjustable period.
- Target message indicating a failed breaker has been declared
- Illumination of the faceplate Trip LED (and the Phase A, B or C LED, if applicable)

MAIN PATH SEQUENCE

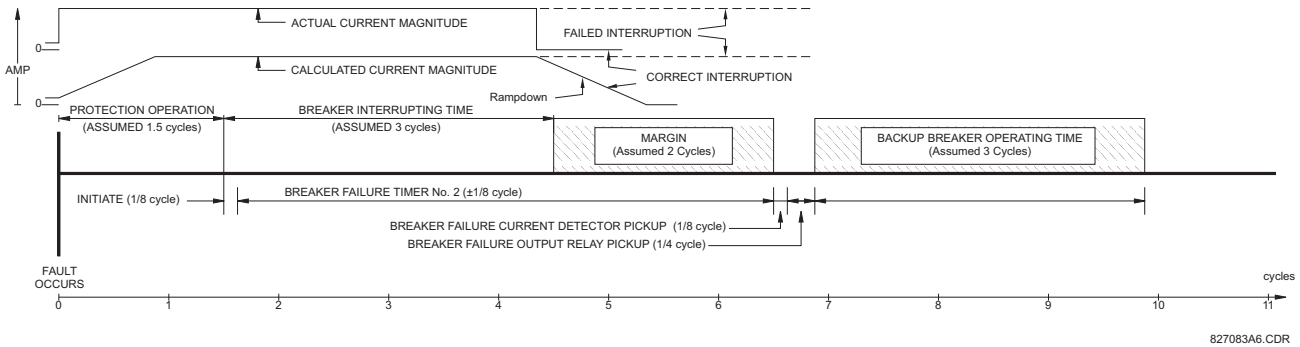

Figure 5–108: BREAKER FAILURE MAIN PATH SEQUENCE

The current supervision elements reset in less than 0.7 of a power cycle for any multiple of pickup current as shown below.

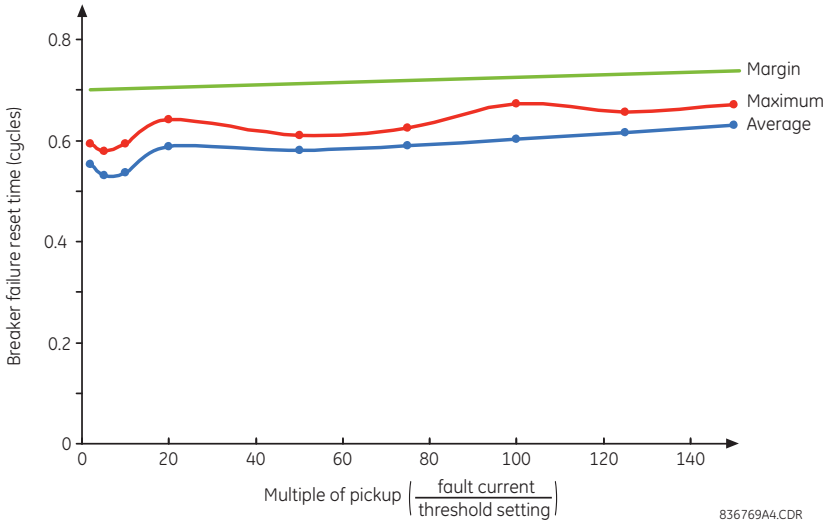

Figure 5–109: BREAKER FAILURE OVERCURRENT SUPERVISION RESET TIME

SETTINGS

- **BF1 MODE:** This setting is used to select the breaker failure operating mode: single or three pole.
- **BF1 USE AMP SUPV:** If set to "Yes", the element will only be initiated if current flowing through the breaker is above the supervision pickup level.
- **BF1 USE SEAL-IN:** If set to "Yes", the element will only be sealed-in if current flowing through the breaker is above the supervision pickup level.
- **BF1 3-POLE INITIATE:** This setting selects the FlexLogic operand that will initiate three-pole tripping of the breaker.
- **BF1 PH AMP SUPV PICKUP:** This setting is used to set the phase current initiation and seal-in supervision level. Generally this setting should detect the lowest expected fault current on the protected breaker. It can be set as low as necessary (lower than breaker resistor current or lower than load current) – high-set and low-set current supervision will guarantee correct operation.
- **BF1 N AMP SUPV PICKUP:** This setting is used to set the neutral current initiate and seal-in supervision level. Generally this setting should detect the lowest expected fault current on the protected breaker. Neutral current supervision is used only in the three phase scheme to provide increased sensitivity. This setting is valid only for three-pole tripping schemes.
- **BF1 USE TIMER 1:** If set to "Yes", the early path is operational.
- **BF1 TIMER 1 PICKUP DELAY:** Timer 1 is set to the shortest time required for breaker auxiliary contact Status-1 to open, from the time the initial trip signal is applied to the breaker trip circuit, plus a safety margin.
- **BF1 USE TIMER 2:** If set to "Yes", the main path is operational.
- **BF1 TIMER 2 PICKUP DELAY:** Timer 2 is set to the expected opening time of the breaker, plus a safety margin. This safety margin was historically intended to allow for measuring and timing errors in the breaker failure scheme equipment. In microprocessor relays this time is not significant. In G60 relays, which use a Fourier transform, the calculated current magnitude ramps-down to zero one power frequency cycle after the current is interrupted, however this lag does not need to be included in the overall margin duration due to a novel current supervision reset element, as it occurs after current interruption. As shown in the previous figure, this current supervision reset element guarantees breaker failure reset in less than 0.7 power cycles for any subsidence current and irrespective of the magnitude of the fault current.

  Note that in bulk oil circuit breakers, the interrupting time for currents less than 25% of the interrupting rating can be significantly longer than the normal interrupting time.
- **BF1 USE TIMER 3:** If set to "Yes", the Slow Path is operational.
- **BF1 TIMER 3 PICKUP DELAY:** Timer 3 is set to the same interval as timer 2, plus an increased safety margin. Because this path is intended to operate only for low level faults, the delay can be in the order of 300 to 500 ms.

- **BF1 BKR POS1 ϕA/3P:** This setting selects the FlexLogic operand that represents the protected breaker early-type auxiliary switch contact (52/a). When using the single-pole breaker failure scheme, this operand represents the protected breaker early-type auxiliary switch contact on pole A. This is normally a non-multiplied form-A contact. The contact may even be adjusted to have the shortest possible operating time.
- **BF1 BKR POS2 ϕA/3P:** This setting selects the FlexLogic operand that represents the breaker normal-type auxiliary switch contact (52/a). When using the single-pole breaker failure scheme, this operand represents the protected breaker auxiliary switch contact on pole A. This may be a multiplied contact.
- **BF1 BREAKER TEST ON:** This setting is used to select the FlexLogic operand that represents the breaker in-service/out-of-service switch set to the out-of-service position.
- **BF1 PH AMP HISET PICKUP:** This setting sets the phase current output supervision level. Generally this setting should detect the lowest expected fault current on the protected breaker, before a breaker opening resistor is inserted.
- **BF1 N AMP HISET PICKUP:** This setting sets the neutral current output supervision level. Generally this setting should detect the lowest expected fault current on the protected breaker, before a breaker opening resistor is inserted. Neutral current supervision is used only in the three pole scheme to provide increased sensitivity. *This setting is valid only for three-pole breaker failure schemes*.
- **BF1 PH AMP LOSET PICKUP:** This setting sets the phase current output supervision level. Generally this setting should detect the lowest expected fault current on the protected breaker, after a breaker opening resistor is inserted (approximately 90% of the resistor current).
- **BF1 N AMP LOSET PICKUP:** This setting sets the neutral current output supervision level. Generally this setting should detect the lowest expected fault current on the protected breaker, after a breaker opening resistor is inserted (approximately 90% of the resistor current). *This setting is valid only for three-pole breaker failure schemes*.
- **BF1 LOSET TIME DELAY:** Sets the pickup delay for current detection after opening resistor insertion.
- **BF1 TRIP DROPOUT DELAY:** This setting is used to set the period of time for which the trip output is sealed-in. This timer must be coordinated with the automatic reclosing scheme of the failed breaker, to which the breaker failure element sends a cancel reclosure signal. Reclosure of a remote breaker can also be prevented by holding a transfer trip signal on longer than the reclaim time.
- **BF1 PH A INITIATE / BF1 PH B INITIATE / BF 1 PH C INITIATE:** These settings select the FlexLogic operand to initiate phase A, B, or C single-pole tripping of the breaker and the phase A, B, or C portion of the scheme, accordingly. *This setting is only valid for single-pole breaker failure schemes*.
- **BF1 BKR POS1 ϕB / BF1 BKR POS 1 ϕC:** These settings select the FlexLogic operand to represents the protected breaker early-type auxiliary switch contact on poles B or C, accordingly. This contact is normally a non-multiplied Form-A contact. The contact may even be adjusted to have the shortest possible operating time. *This setting is valid only for single-pole breaker failure schemes*.
- **BF1 BKR POS2 ϕB:** Selects the FlexLogic operand that represents the protected breaker normal-type auxiliary switch contact on pole B (52/a). This may be a multiplied contact. *This setting is valid only for single-pole breaker failure schemes*.
- **BF1 BKR POS2 ϕC:** This setting selects the FlexLogic operand that represents the protected breaker normal-type auxiliary switch contact on pole C (52/a). This may be a multiplied contact. For single-pole operation, the scheme has the same overall general concept except that it provides re-tripping of each single pole of the protected breaker. The approach shown in the following single pole tripping diagram uses the initiating information to determine which pole is supposed to trip. The logic is segregated on a per-pole basis. The overcurrent detectors have ganged settings. *This setting is valid only for single-pole breaker failure schemes*.

  Upon operation of the breaker failure element for a single pole trip command, a three-pole trip command should be given via output operand BKR FAIL 1 TRIP OP.

SINGLE-POLE BREAKER FAILURE, INITIATE

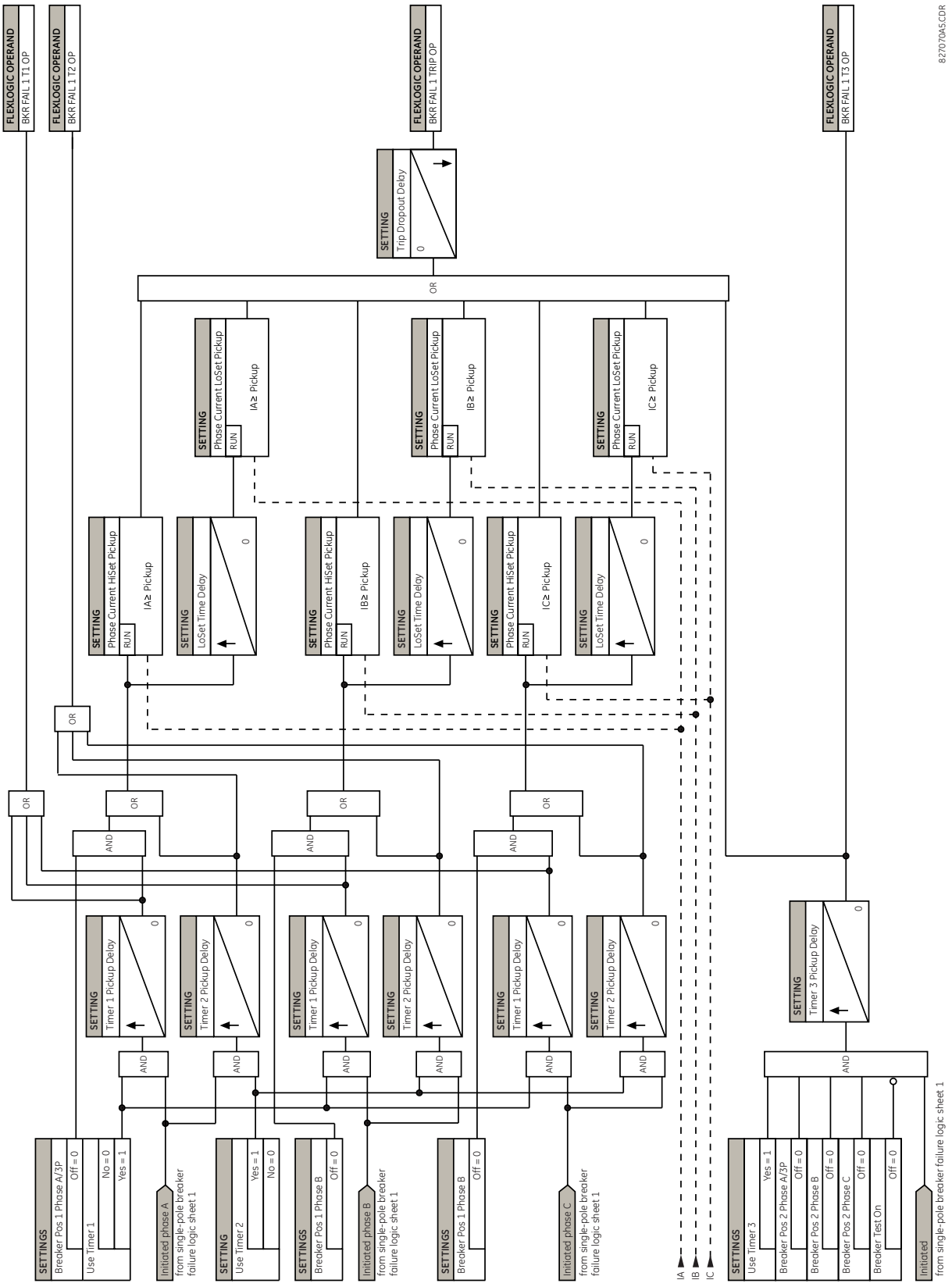

Figure 5–110: SINGLE-POLE BREAKER FAILURE, TIMERS

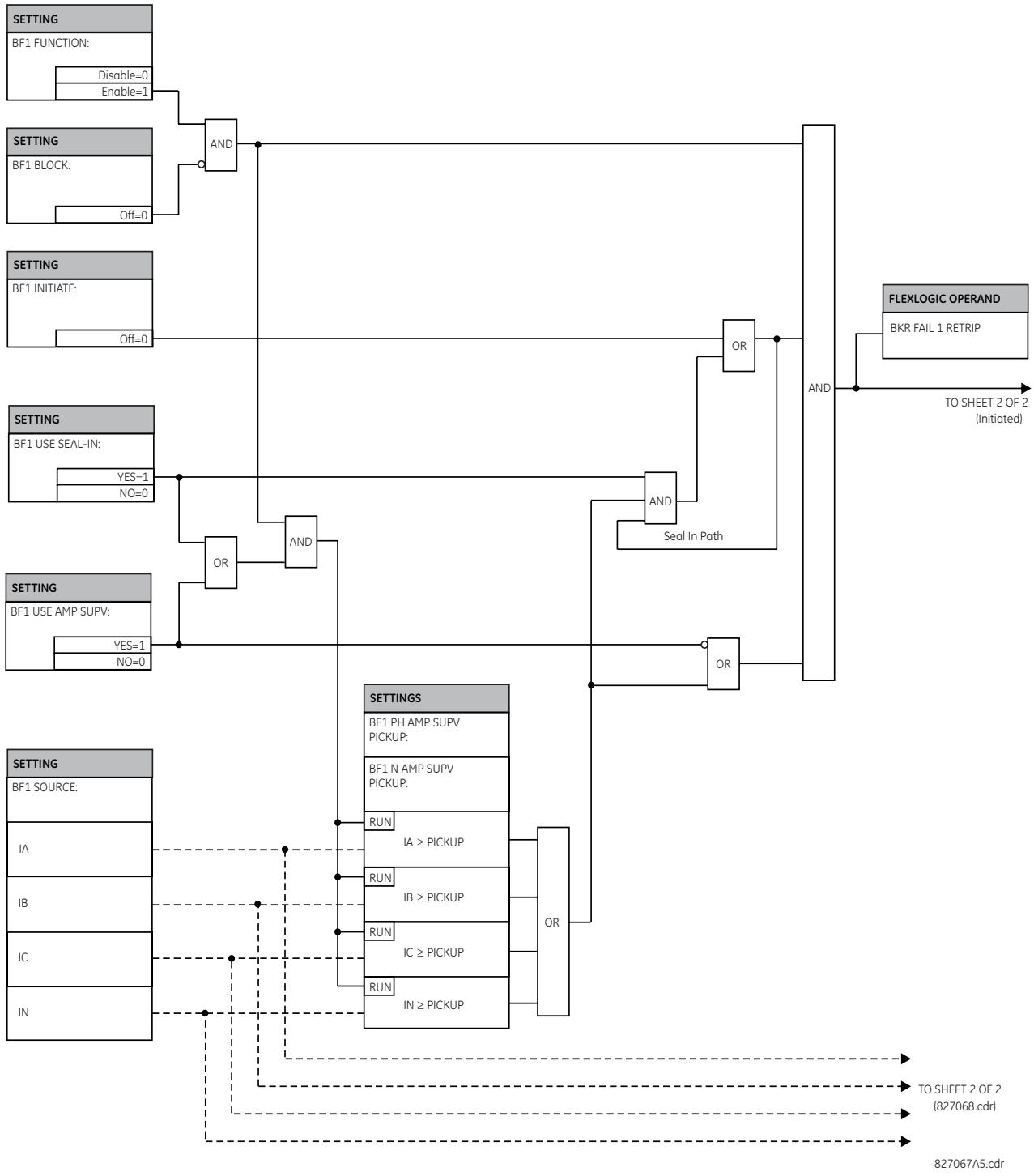

Figure 5–111: THREE-POLE BREAKER FAILURE, INITIATE

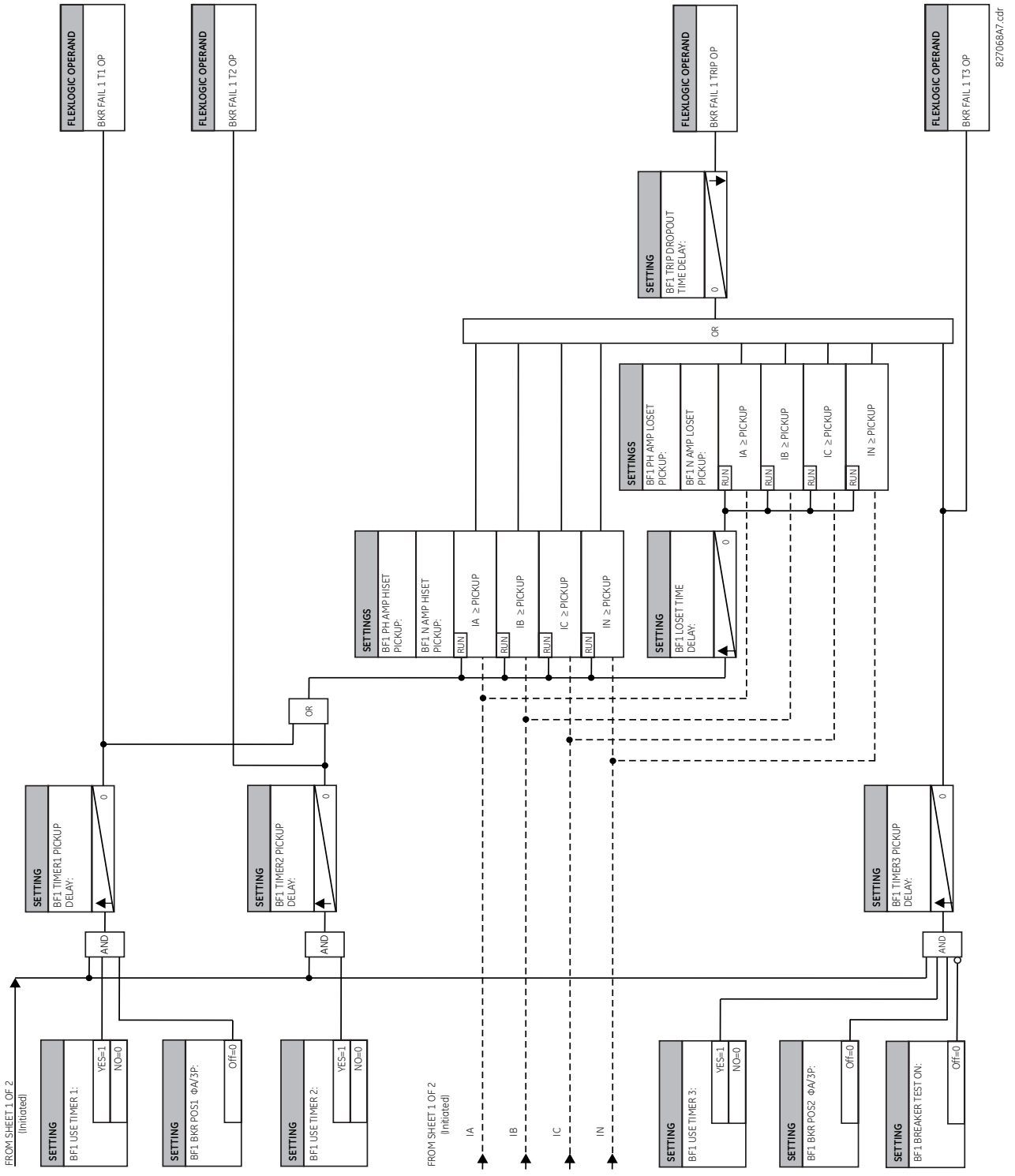

Figure 5–112: THREE-POLE BREAKER FAILURE, TIMERS

a) MAIN MENU

PATH: SETTINGS ⇩ GROUPED ELEMENTS ⇨ SETTING GROUP 1(6) ⇨⇩ VOLTAGE ELEMENTS

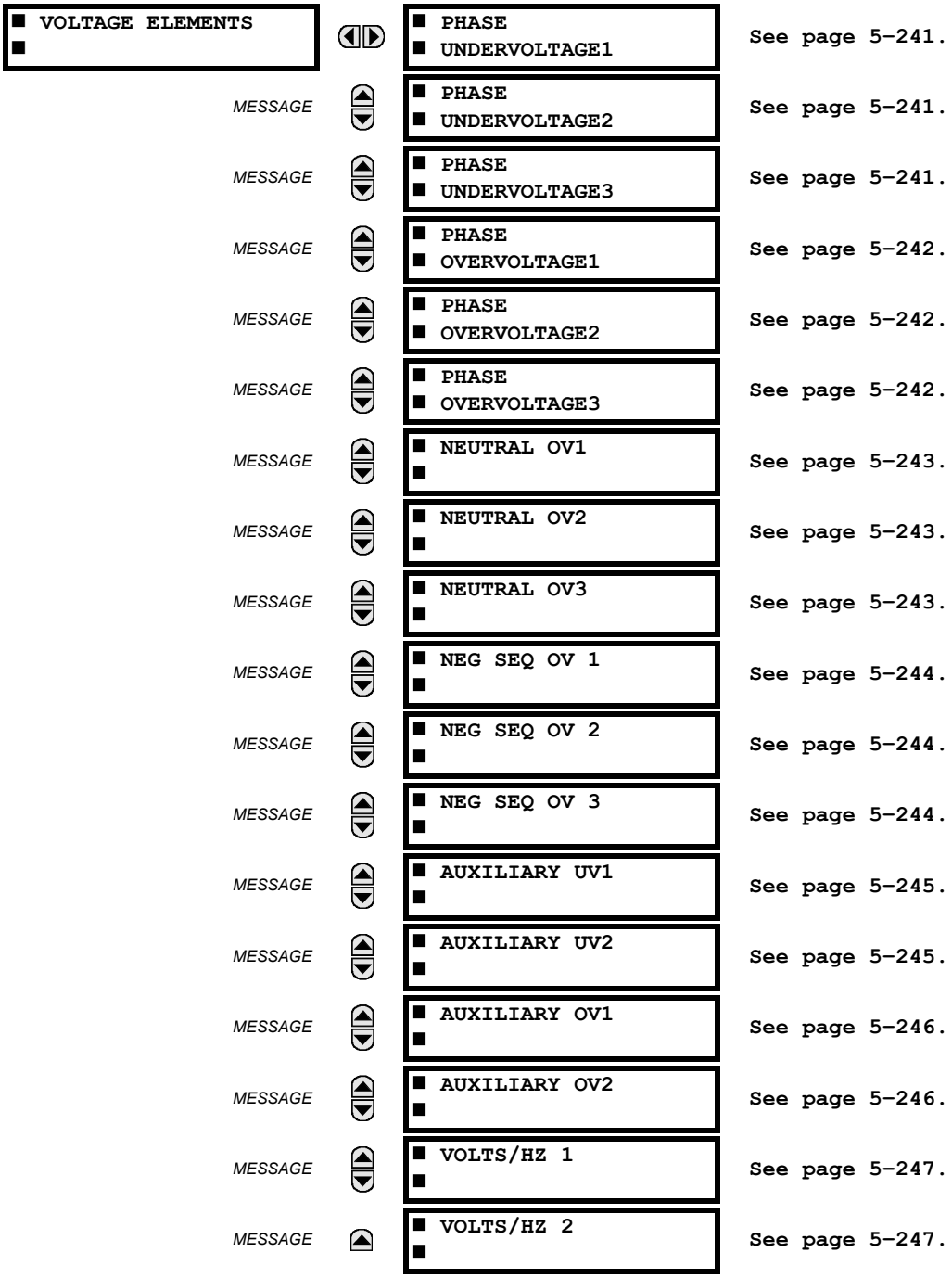

These protection elements can be used for a variety of applications such as:

- ***Undervoltage Protection:*** For voltage sensitive loads, such as induction motors, a drop in voltage increases the drawn current which may cause dangerous overheating in the motor. The undervoltage protection feature can be used to either cause a trip or generate an alarm when the voltage drops below a specified voltage setting for a specified time delay.

- ***Permissive Functions:*** The undervoltage feature may be used to block the functioning of external devices by operating an output relay when the voltage falls below the specified voltage setting. The undervoltage feature may also be used to block the functioning of other elements through the block feature of those elements.
- ***Source Transfer Schemes:*** In the event of an undervoltage, a transfer signal may be generated to transfer a load from its normal source to a standby or emergency power source.

The undervoltage elements can be programmed to have a definite time delay characteristic. The definite time curve operates when the voltage drops below the pickup level for a specified period of time. The time delay is adjustable from 0 to 600.00 seconds in steps of 0.01. The undervoltage elements can also be programmed to have an inverse time delay characteristic.

The undervoltage delay setting defines the family of curves shown below.

$$T = \frac{D}{\left(1 - \frac{V}{V_{pickup}}\right)} \quad \textbf{(EQ 5.29)}$$

where: T = operating time
D = undervoltage delay setting (D = 0.00 operates instantaneously)
V = secondary voltage applied to the relay
V_{pickup} = pickup level

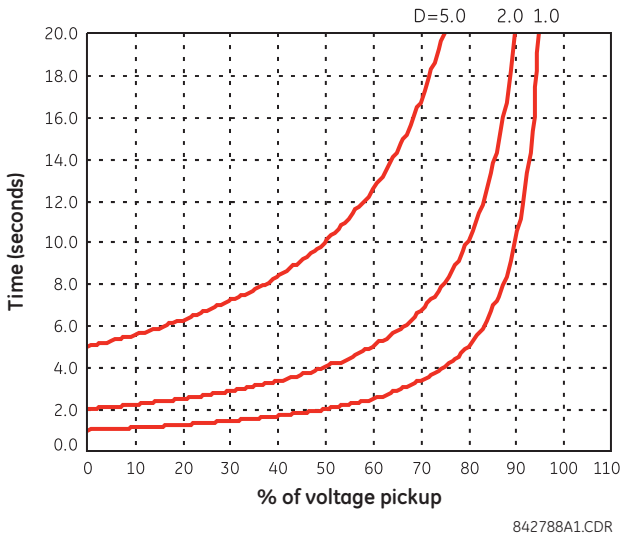

Figure 5–113: INVERSE TIME UNDERVOLTAGE CURVES

NOTE

At 0% of pickup, the operating time equals the **UNDERVOLTAGE DELAY** setting.

b) PHASE UNDERVOLTAGE (ANSI 27P, IEC PTUV)

PATH: SETTINGS ⇨⇩ GROUPED ELEMENTS ⇨ SETTING GROUP 1(6) ⇨⇩ VOLTAGE ELEMENTS ⇨ PHASE UNDERVOLTAGE1(3)

■ PHASE ■ UNDERVOLTAGE1		PHASE UV1 FUNCTION: Disabled	*Range: Disabled, Enabled*
MESSAGE		PHASE UV1 SIGNAL SOURCE: SRC 1	*Range: SRC 1, SRC 2, SRC 3, SRC 4*
MESSAGE		PHASE UV1 MODE: Phase to Ground	*Range: Phase to Ground, Phase to Phase*
MESSAGE		PHASE UV1 PICKUP: 1.000 pu	*Range: 0.000 to 3.000 pu in steps of 0.001*
MESSAGE		PHASE UV1 CURVE: Definite Time	*Range: Definite Time, Inverse Time*
MESSAGE		PHASE UV1 DELAY: 1.00 s	*Range: 0.00 to 600.00 s in steps of 0.01*
MESSAGE		PHASE UV1 MINIMUM VOLTAGE: 0.100 pu	*Range: 0.000 to 3.000 pu in steps of 0.001*
MESSAGE		PHASE UV1 BLOCK: Off	*Range: FlexLogic operand*
MESSAGE		PHASE UV1 TARGET: Self-reset	*Range: Self-reset, Latched, Disabled*
MESSAGE		PHASE UV1 EVENTS: Disabled	*Range: Disabled, Enabled*

This element may be used to give a desired time-delay operating characteristic versus the applied fundamental voltage (phase-to-ground or phase-to-phase for wye VT connection, or phase-to-phase for delta VT connection) or as a definite time element. The element resets instantaneously if the applied voltage exceeds the dropout voltage. The delay setting selects the minimum operating time of the phase undervoltage. The minimum voltage setting selects the operating voltage below which the element is blocked (a setting of "0" will allow a dead source to be considered a fault condition).

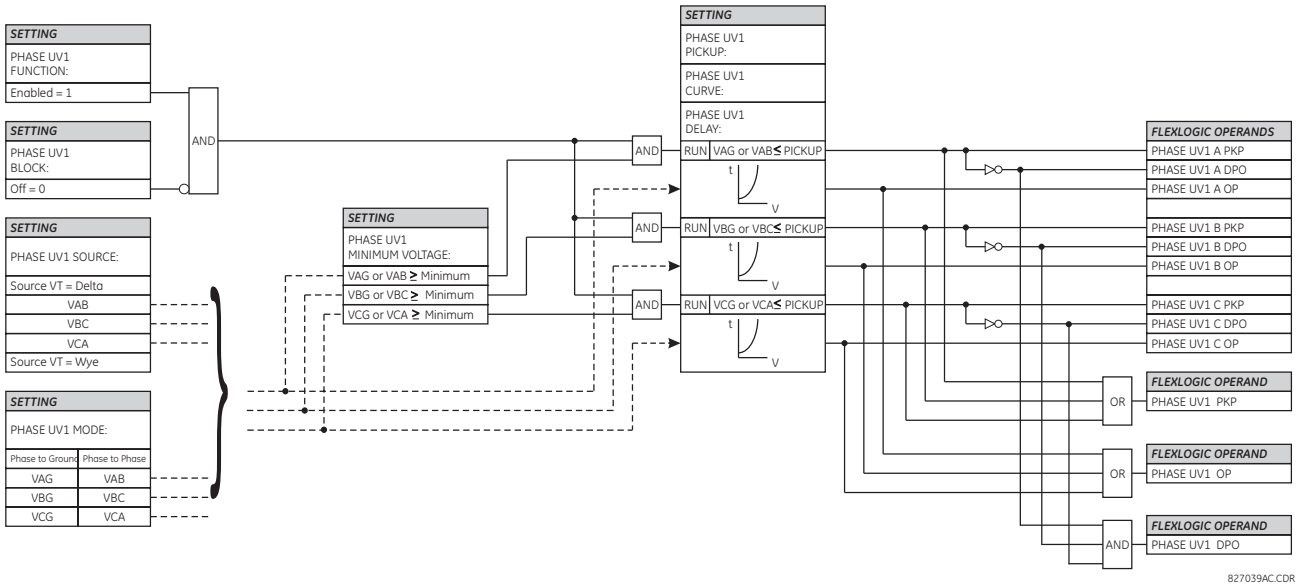

Figure 5–114: PHASE UNDERVOLTAGE1 SCHEME LOGIC

c) PHASE OVERVOLTAGE (ANSI 59P, IEC PTOV)

PATH: SETTINGS ⇨⇩ GROUPED ELEMENTS ⇨ SETTING GROUP 1(6) ⇨⇩ VOLTAGE ELEMENTS ⇨⇩ PHASE OVERVOLTAGE1(3)

■ PHASE ■ OVERVOLTAGE1		PHASE OV1 FUNCTION: Disabled	*Range: Disabled, Enabled*
	MESSAGE	PHASE OV1 SIGNAL SOURCE: SRC 1	*Range: SRC 1, SRC 2, SRC 3, SRC 4*
	MESSAGE	PHASE OV1 PICKUP: 1.000 pu	*Range: 0.000 to 3.000 pu in steps of 0.001*
	MESSAGE	PHASE OV1 PICKUP DELAY: 1.00 s	*Range: 0.00 to 600.00 s in steps of 0.01*
	MESSAGE	PHASE OV1 RESET DELAY: 1.00 s	*Range: 0.00 to 600.00 s in steps of 0.01*
	MESSAGE	PHASE OV1 BLOCK: Off	*Range: FlexLogic Operand*
	MESSAGE	PHASE OV1 TARGET: Self-reset	*Range: Self-reset, Latched, Disabled*
	MESSAGE	PHASE OV1 EVENTS: Disabled	*Range: Disabled, Enabled*

5

There are three phase overvoltage elements available. A phase overvoltage element is used as an instantaneous element with no intentional time delay or as a definite time element. The input voltage is the phase-to-phase voltage, either measured directly from delta-connected VTs or as calculated from phase-to-ground (wye) connected VTs. The specific voltages to be used for each phase are shown below.

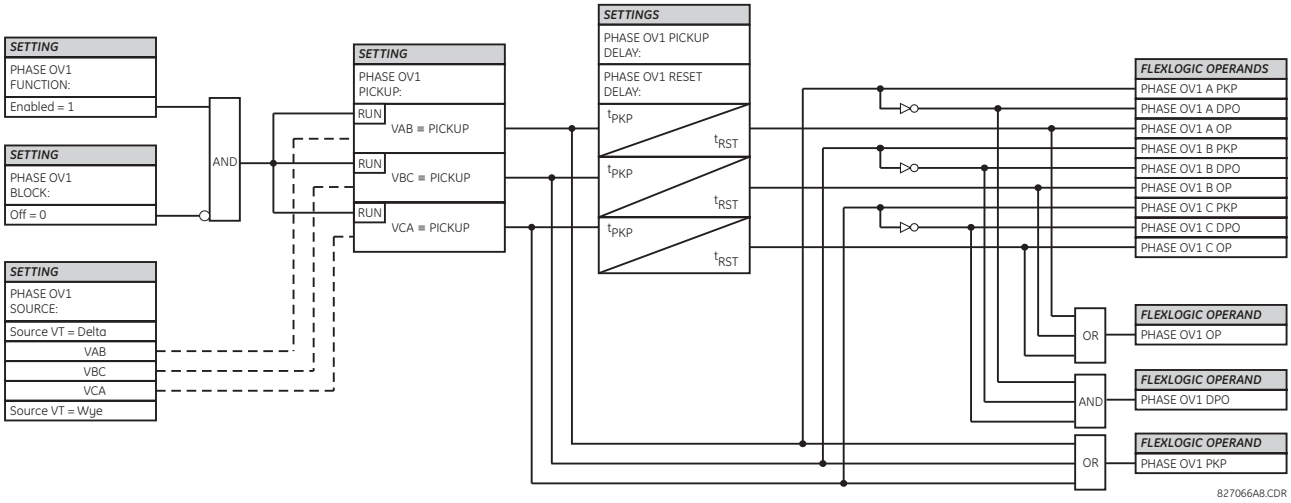

Figure 5–115: PHASE OVERVOLTAGE SCHEME LOGIC

NOTE

If the source VT is wye-connected, then the phase overvoltage pickup condition is $V > \sqrt{3} \times$ Pickup for V_{AB}, V_{BC}, and V_{CA}.

d) NEUTRAL OVERVOLTAGE (ANSI 59N, IEC PTOV)

PATH: SETTINGS ⇨⇩ GROUPED ELEMENTS ⇨ SETTING GROUP 1(6) ⇨⇩ VOLTAGE ELEMENTS ⇨⇩ NEUTRAL OV1(3)

■ NEUTRAL OV1 ■		NEUTRAL OV1 FUNCTION: Disabled	Range: Disabled, Enabled
	MESSAGE	NEUTRAL OV1 SIGNAL SOURCE: SRC 1	Range: SRC 1, SRC 2, SRC 3, SRC 4
	MESSAGE	NEUTRAL OV1 PICKUP: 0.300 pu	Range: 0.000 to 3.000 pu in steps of 0.001
	MESSAGE	NEUTRAL OV1 CURVE: Definite time	Range: Definite time, FlexCurve A, FlexCurve B, FlexCurve C
	MESSAGE	NEUTRAL OV1 PICKUP DELAY: 1.00 s	Range: 0.00 to 600.00 s in steps of 0.01
	MESSAGE	NEUTRAL OV1 RESET DELAY: 1.00 s	Range: 0.00 to 600.00 s in steps of 0.01
	MESSAGE	NEUTRAL OV1 BLOCK: Off	Range: FlexLogic operand
	MESSAGE	NEUTRAL OV1 TARGET: Self-reset	Range: Self-reset, Latched, Disabled
	MESSAGE	NEUTRAL OV1 EVENTS: Disabled	Range: Disabled, Enabled

There are three neutral overvoltage elements available. The neutral overvoltage element can be used to detect asymmetrical system voltage condition due to a ground fault or to the loss of one or two phases of the source. The element responds to the system neutral voltage (3V_0), calculated from the phase voltages. The nominal secondary voltage of the phase voltage channels entered under SETTINGS ⇨⇩ SYSTEM SETUP ⇨ AC INPUTS ⇨⇩ VOLTAGE BANK ⇨ PHASE VT SECONDARY is the p.u. base used when setting the pickup level.

The neutral overvoltage element can provide a time-delayed operating characteristic versus the applied voltage (initialized from FlexCurves A, B, or C) or be used as a definite time element. The **NEUTRAL OV1 PICKUP DELAY** setting applies only if the **NEUTRAL OV1 CURVE** setting is “Definite time”. The source assigned to this element must be configured for a phase VT.

VT errors and normal voltage unbalance must be considered when setting this element. This function requires the VTs to be wye-connected.

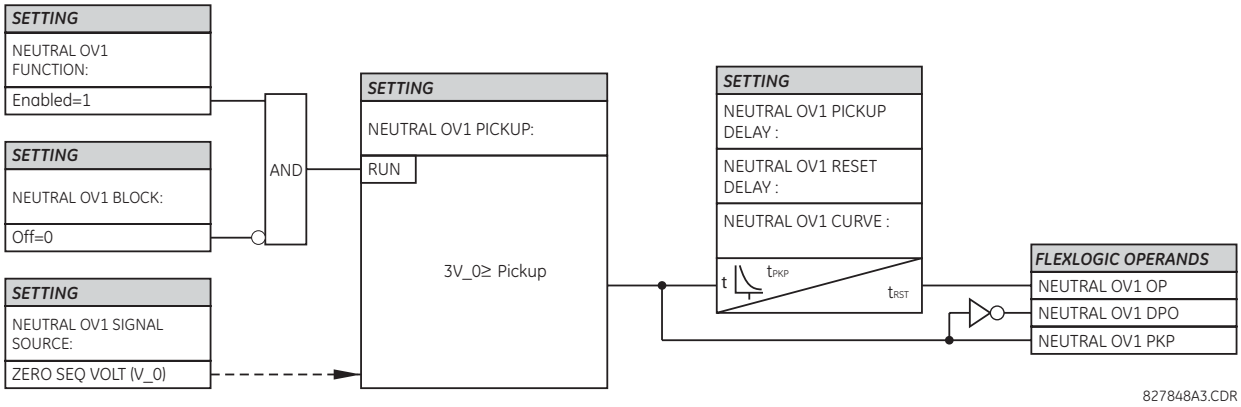

Figure 5–116: NEUTRAL OVERVOLTAGE1 SCHEME LOGIC

e) NEGATIVE-SEQUENCE OVERVOLTAGE (ANSI 59Q, IEC PTOV)

PATH: SETTINGS ⇨⇩ GROUPED ELEMENTS ⇨ SETTING GROUP 1(6) ⇨⇩ VOLTAGE ELEMENTS ⇨⇩ NEG SEQ OV 1(3)

■ NEG SEQ OV 1 ■		NEG SEQ OV 1 FUNCTION: Disabled	Range: Disabled, Enabled
	MESSAGE	NEG SEQ OV 1 SIGNAL SOURCE: SRC 1	Range: SRC 1, SRC 2, SRC 3, SRC 4
	MESSAGE	NEG SEQ OV 1 PICKUP: 0.300 pu	Range: 0.000 to 1.250 pu in steps of 0.001
	MESSAGE	NEG SEQ OV 1 PICKUP DELAY: 0.50 s	Range: 0.00 to 600.00 s in steps of 0.01
	MESSAGE	NEG SEQ OV 1 RESET DELAY: 0.50 s	Range: 0.00 to 600.00 s in steps of 0.01
	MESSAGE	NEG SEQ OV 1 BLOCK: Off	Range: FlexLogic operand
	MESSAGE	NEG SEQ OV 1 TARGET: Self-reset	Range: Self-reset, Latched, Disabled
	MESSAGE	NEG SEQ OV 1 EVENTS: Disabled	Range: Disabled, Enabled

5

There are three negative-sequence overvoltage elements available.

The negative-sequence overvoltage element may be used to detect loss of one or two phases of the source, a reversed phase sequence of voltage, or a non-symmetrical system voltage condition.

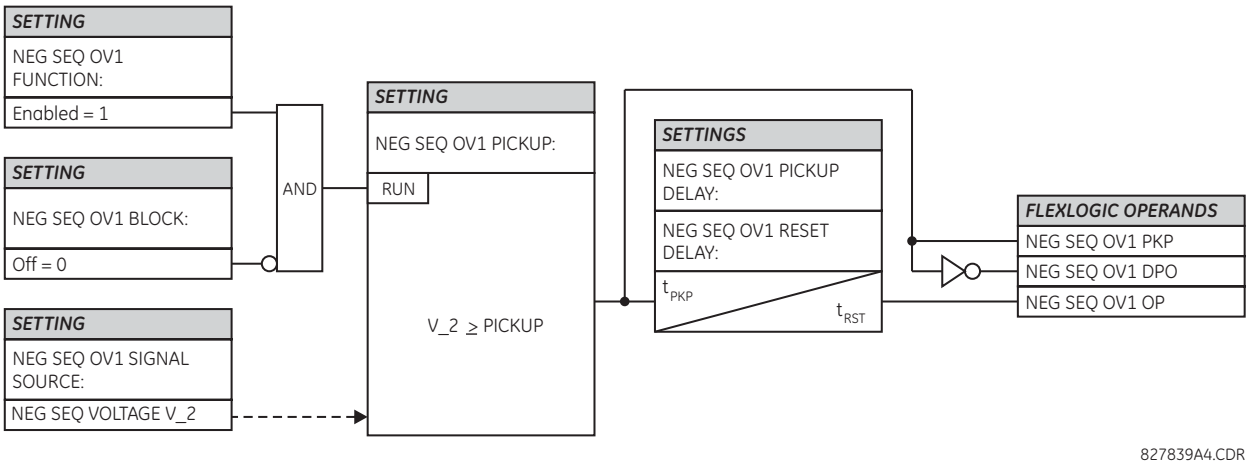

Figure 5–117: NEGATIVE-SEQUENCE OVERVOLTAGE SCHEME LOGIC

f) AUXILIARY UNDERVOLTAGE (ANSI 27X, IEC PTUV)

PATH: SETTINGS ⇨⇩ GROUPED ELEMENTS ⇨ SETTING GROUP 1(6) ⇨⇩ VOLTAGE ELEMENTS ⇨⇩ AUXILIARY UV1(2)

■ AUXILIARY UV1 ■		AUX UV1 FUNCTION: Disabled	Range: Disabled, Enabled
	MESSAGE	AUX UV1 SIGNAL SOURCE: SRC 1	Range: SRC 1, SRC 2, SRC 3, SRC 4
	MESSAGE	AUX UV1 PICKUP: 0.700 pu	Range: 0.000 to 3.000 pu in steps of 0.001
	MESSAGE	AUX UV1 CURVE: Definite Time	Range: Definite Time, Inverse Time
	MESSAGE	AUX UV1 DELAY: 1.00 s	Range: 0.00 to 600.00 s in steps of 0.01
	MESSAGE	AUX UV1 MINIMUM VOLTAGE: 0.100 pu	Range: 0.000 to 3.000 pu in steps of 0.001
	MESSAGE	AUX UV1 BLOCK: Off	Range: FlexLogic operand
	MESSAGE	AUX UV1 TARGET: Self-reset	Range: Self-reset, Latched, Disabled
	MESSAGE	AUX UV1 EVENTS: Disabled	Range: Disabled, Enabled

The G60 contains one auxiliary undervoltage element for each VT bank. This element is intended for monitoring undervoltage conditions of the auxiliary voltage. The **AUX UV1 PICKUP** selects the voltage level at which the time undervoltage element starts timing. The nominal secondary voltage of the auxiliary voltage channel entered under **SETTINGS ⇨⇩ SYSTEM SETUP ⇨ AC INPUTS ⇨⇩ VOLTAGE BANK X5 ⇨⇩ AUXILIARY VT X5 SECONDARY** is the per-unit base used when setting the pickup level.

The **AUX UV1 DELAY** setting selects the minimum operating time of the auxiliary undervoltage element. Both **AUX UV1 PICKUP** and **AUX UV1 DELAY** settings establish the operating curve of the undervoltage element. The auxiliary undervoltage element can be programmed to use either definite time delay or inverse time delay characteristics. The operating characteristics and equations for both definite and inverse time delay are as for the phase undervoltage element.

The element resets instantaneously. The minimum voltage setting selects the operating voltage below which the element is blocked.

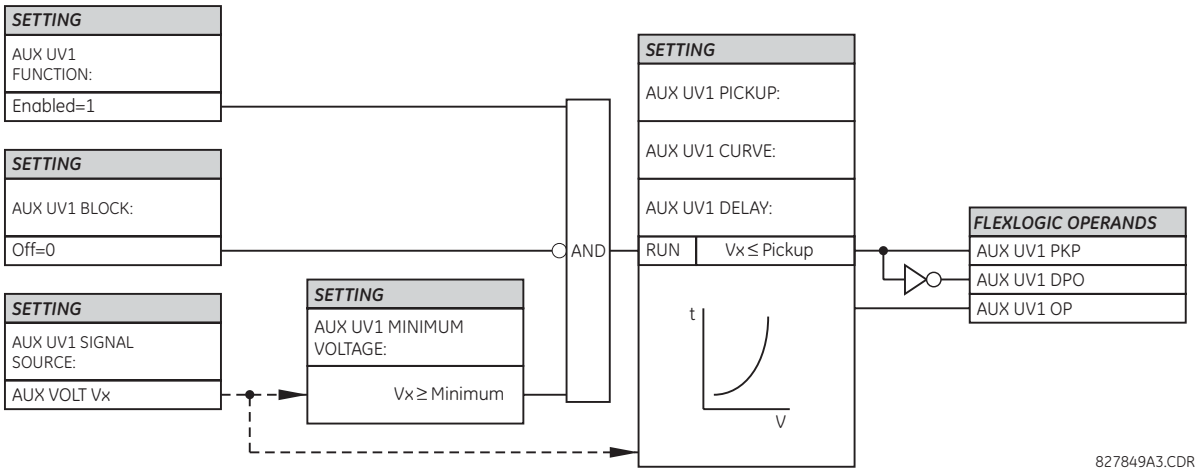

Figure 5–118: AUXILIARY UNDERVOLTAGE SCHEME LOGIC

g) AUXILIARY OVERVOLTAGE (ANSI 59X, IEC PTOV)

PATH: SETTINGS ⇨⇩ GROUPED ELEMENTS ⇨ SETTING GROUP 1(6) ⇨⇩ VOLTAGE ELEMENTS ⇨⇩ AUXILIARY OV1(2)

■ AUXILIARY OV1 ■		AUX OV1 FUNCTION: Disabled	Range: Disabled, Enabled
	MESSAGE	AUX OV1 SIGNAL SOURCE: SRC 1	Range: SRC 1, SRC 2, SRC 3, SRC 4
	MESSAGE	AUX OV1 PICKUP: 0.300 pu	Range: 0.000 to 3.000 pu in steps of 0.001
	MESSAGE	AUX OV1 PICKUP DELAY: 1.00 s	Range: 0.00 to 600.00 s in steps of 0.01
	MESSAGE	AUX OV1 RESET DELAY: 1.00 s	Range: 0.00 to 600.00 s in steps of 0.01
	MESSAGE	AUX OV1 BLOCK: Off	Range: FlexLogic operand
	MESSAGE	AUX OV1 TARGET: Self-reset	Range: Self-reset, Latched, Disabled
	MESSAGE	AUX OV1 EVENTS: Disabled	Range: Disabled, Enabled

5

The G60 contains one auxiliary overvoltage element for each VT bank. This element is intended for monitoring overvoltage conditions of the auxiliary voltage. The nominal secondary voltage of the auxiliary voltage channel entered under **SYSTEM SETUP ⇨ AC INPUTS ⇩⇨ VOLTAGE BANK X5 ⇩⇨ AUXILIARY VT X5 SECONDARY** is the per-unit (pu) base used when setting the pickup level.

In the G60, this element is used to detect stator ground faults by measuring the voltage across the neutral resistor.

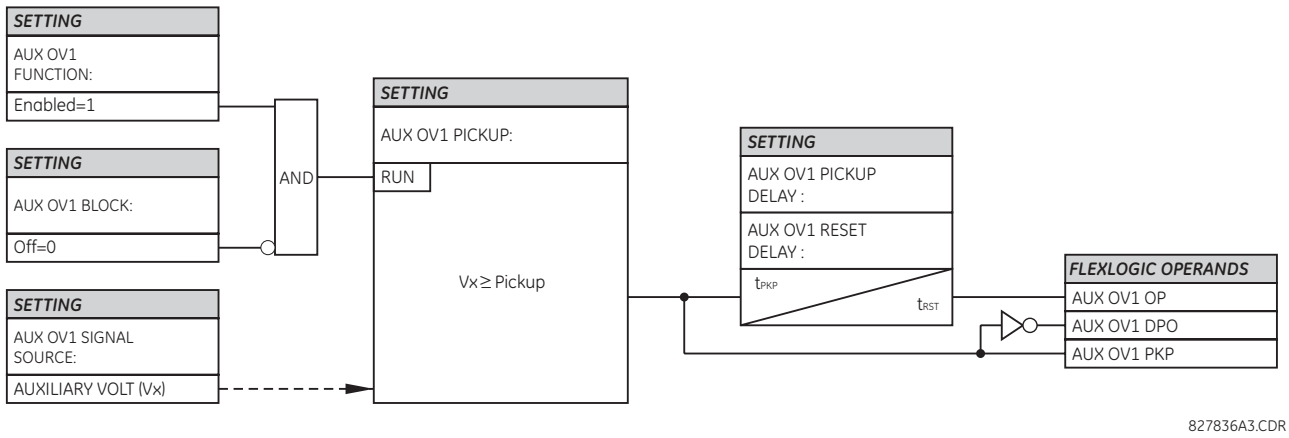

Figure 5–119: AUXILIARY OVERVOLTAGE SCHEME LOGIC

h) VOLTS PER HERTZ (ANSI 24, IEC PVPH)

PATH: SETTINGS ⇨⇩ GROUPED ELEMENTS ⇨ SETTING GROUP 1(6) ⇨⇩ VOLTAGE ELEMENTS ⇨⇩ VOLTS/HZ 1(2)

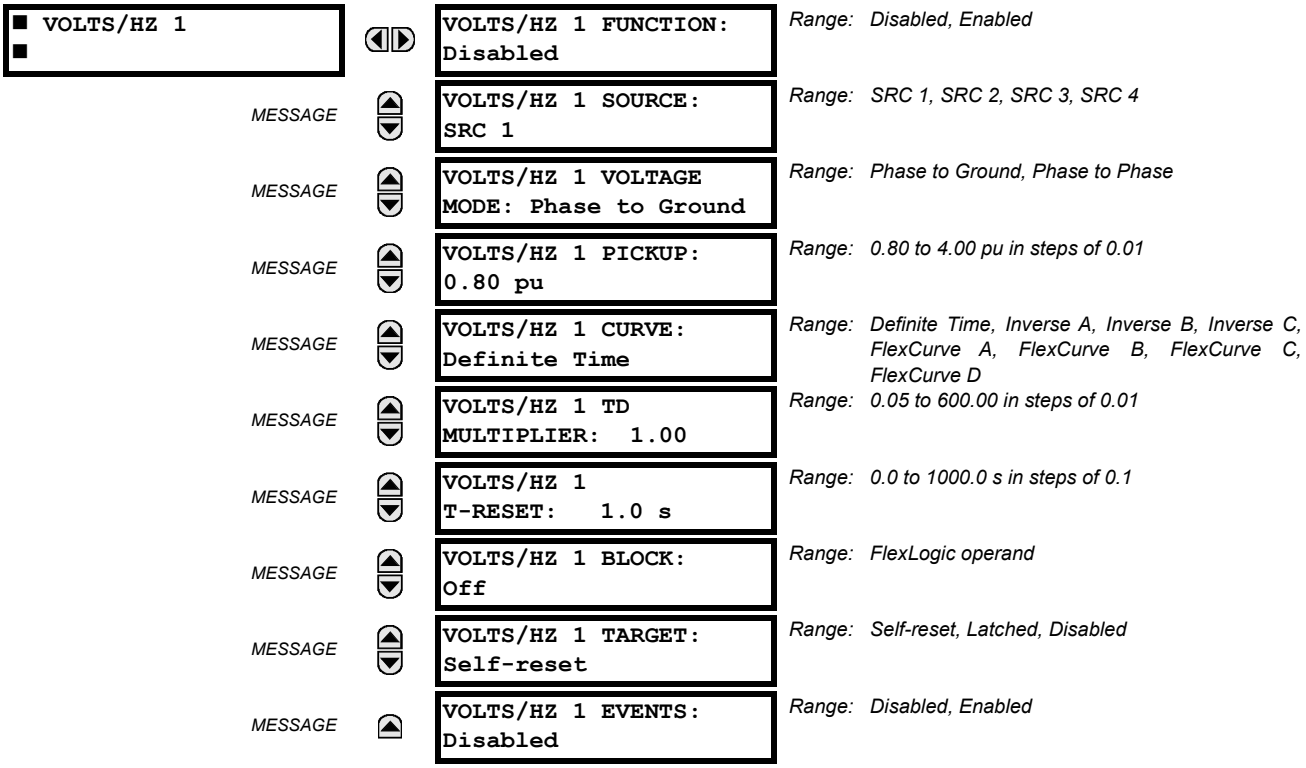

The per-unit volts-per-hertz (V/Hz) value is calculated using the maximum of the three-phase voltage inputs or the auxiliary voltage channel Vx input, if the source is not configured with phase voltages. To use the V/Hz element with auxiliary voltage, set **SYSTEM SETUP ⇨⇩ SIGNAL SOURCES ⇨ SOURCE 1(6) ⇨⇩ SOURCE 1(6) PHASE VT** to "None" and **SOURCE 1(6) AUX VT** to the corresponding voltage input bank. If there is no voltage on the relay terminals in either case, the per-unit V/Hz value is automatically set to "0". The per unit value is established as per voltage and nominal frequency power system settings as follows:

1. If the phase voltage inputs defined in the source menu are used for V/Hz operation, then "1 pu" is the selected **SYSTEM SETUP ⇨ AC INPUTS ⇨⇩ VOLTAGE BANK *N* ⇨⇩ PHASE VT *N* SECONDARY** setting, divided by the divided by the **SYSTEM SETUP ⇨⇩ POWER SYSTEM ⇨ NOMINAL FREQUENCY** setting.
2. If the voltage bank connection value is selected as "Delta", then the phase-to-phase nominal voltage is used to define the per-unit value. If the voltage bank connection value is selected as "Wye", then the **VOLTS/HZ 1 VOLTAGE MODE** setting further defines the operating quantity and per-unit value for this element. If the voltage mode is set as "Phase to Phase", then the operating quantity for this element will be phase-to-phase nominal voltage. Likewise, if the voltage mode is set to "Phase to Ground", then the operating quantity for this element will be the phase-to-ground nominal voltage. It is beneficial to use the phase-to-phase voltage mode for this element when the G60 device is applied on an isolated or resistance-grounded system.
3. When the auxiliary voltage Vx is used (regarding the condition for "None" phase voltage setting mentioned above), then the 1 pu value is the **SYSTEM SETUP ⇨ AC INPUTS ⇨⇩ VOLTAGE BANK *N* ⇨⇩ AUXILIARY VT *N* SECONDARY** setting divided by the **SYSTEM SETUP ⇨⇩ POWER SYSTEM ⇨ NOMINAL FREQUENCY** setting.
4. If V/Hz source is configured with both phase and auxiliary voltages, the maximum phase among the three voltage channels at any given point in time is the input voltage signal for element operation, and therefore the per-unit value will be calculated as described in Step 1 above. If the measured voltage of all three phase voltages is 0, than the per-unit value becomes automatically 0 regardless of the presence of auxiliary voltage.

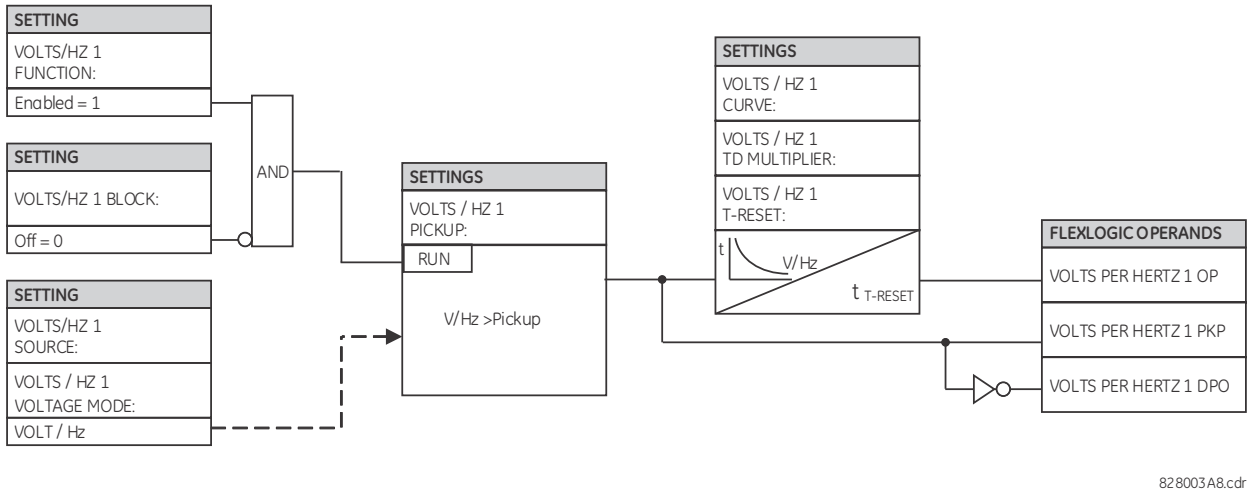

Figure 5–120: VOLTS PER HERTZ SCHEME LOGIC

The element has a linear reset characteristic. The reset time can be programmed to match the cooling characteristics of the protected equipment. The element will fully reset from the trip threshold in **VOLTS/HZ T-RESET** seconds. The V/Hz element may be used as an instantaneous element with no intentional time delay or as a Definite or Inverse timed element.

The characteristics of the inverse curves are shown below.

5

DEFINITE TIME

For the definite time curve, T(sec.) = TD multiplier. For example, setting the TD multiplier to 20 results a time delay of 20 seconds to operate when above the Volts/Hz pickup setting. Instantaneous operation can be obtained the same way by setting the TD multiplier to "0".

INVERSE CURVE A

The curve for the volts/hertz inverse curve A shape is derived from the formula:

$$T = \frac{\text{TDM}}{\left[\left(\frac{V}{F}\right) / \text{Pickup}\right]^2 - 1} \text{ when } \frac{V}{F} > \text{Pickup} \qquad \textbf{(EQ 5.30)}$$

where: T = Operating Time
TDM = Time Delay Multiplier (delay in seconds)
V = fundamental RMS value of voltage (pu)
F = frequency of voltage signal (pu)
Pickup = volts-per-hertz pickup setpoint (pu)

The volts/hertz inverse A curves are shown below.

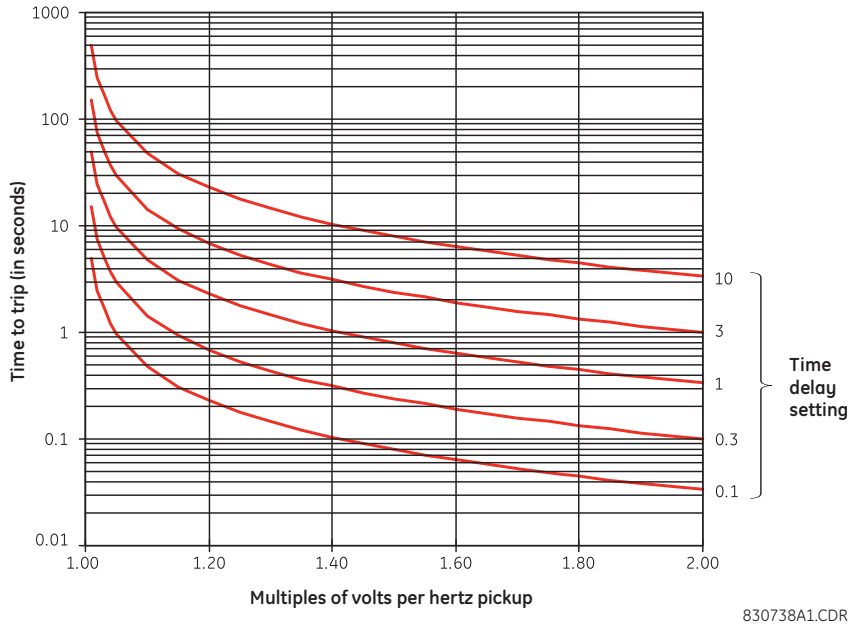

Figure 5–121: VOLTS-PER-HERTZ CURVES, INVERSE CURVE A

INVERSE CURVE B

The curve for the Volts/Hertz Inverse Curve B shape is derived from the formula:

$$T = \frac{\text{TDM}}{\left[\left(\frac{V}{F}\right) / \text{Pickup}\right] - 1} \quad \text{when} \quad \frac{V}{F} > \text{Pickup} \qquad \textbf{(EQ 5.31)}$$

where: T = Operating Time
TDM = Time Delay Multiplier (delay in sec.)
V = fundamental RMS value of voltage (pu)
F = frequency of voltage signal (pu)
$Pickup$ = volts-per-hertz pickup setpoint (pu)

The volts/hertz inverse B curves are shown below.

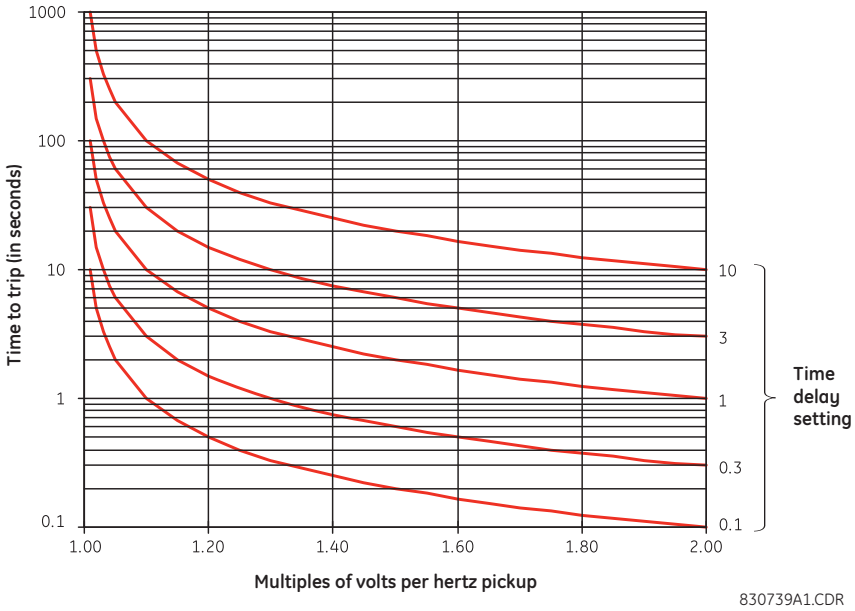

Figure 5–122: VOLTS-PER-HERTZ CURVES, INVERSE CURVE B

INVERSE CURVE C

The curve for the Volts/Hertz Inverse Curve C shape is derived from the formula:

$$T = \frac{\text{TDM}}{\left[\left(\frac{V}{F}\right) / \text{Pickup}\right]^{0.5} - 1} \quad \text{when} \quad \frac{V}{F} > \text{Pickup} \qquad \textbf{(EQ 5.32)}$$

where: T = Operating Time
TDM = Time Delay Multiplier (delay in sec.)
V = fundamental RMS value of voltage (pu)
F = frequency of voltage signal (pu)
$Pickup$ = volts-per-hertz pickup setpoint (pu)

The volts/hertz inverse C curves are shown below.

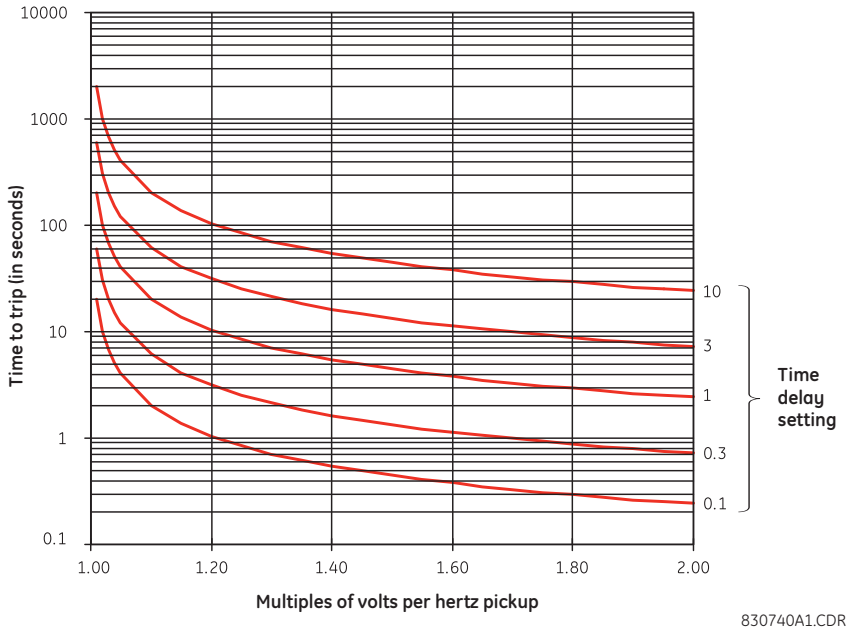

Figure 5–123: VOLTS-PER-HERTZ CURVES, INVERSE CURVE C

5.6.14 LOSS OF EXCITATION (ANSI 40)

PATH: SETTINGS ⇨⇩ GROUPED ELEMENTS ⇨ SETTING GROUP 1(6) ⇨⇩ LOSS OF EXCITATION

■ LOSS OF EXCITATION		LOSS OF EXCITATION FUNCTION: Disabled	*Range: Disabled, Enabled*
	MESSAGE	LOSS OF EXCITATION SOURCE: SRC 1	*Range: SRC 1, SRC 2, SRC 3, SRC 4*
	MESSAGE	LOSS OF EXCITATION CENTER 1: 10.00 ohm	*Range: 0.10 to 300.00 ohms in steps of 0.01*
	MESSAGE	LOSS OF EXCITATION RADIUS 1: 8.00 ohm	*Range: 0.10 to 300.00 ohms in steps of 0.01*
	MESSAGE	EXCITATION V SUPV 1: Enabled	*Range: Disabled, Enabled*
	MESSAGE	LOSS OF EXCITATION PKP DELAY1: 0.050 s	*Range: 0.000 to 65.535 s in steps of 0.01*
	MESSAGE	LOSS OF EXCITATION CENTER 2: 12.00 ohm	*Range: 0.10 to 300.00 ohms in steps of 0.01*
	MESSAGE	LOSS OF EXCITATION RADIUS 2: 10.00 ohm	*Range: 0.10 to 300.00 ohms in steps of 0.01*
	MESSAGE	LOSS OF EXCITATION V SUPV 2: Enabled	*Range: Disabled, Enabled*
	MESSAGE	LOSS OF EXCITATION PKP DELAY2: 0.500 s	*Range: 0.000 to 65.535 s in steps of 0.01*
	MESSAGE	LOSS OF EXCITATION UV SUPV: 0.700 pu	*Range: 0.000 to 1.250 pu in steps of 0.001*

MESSAGE
LOSS OF EXCIT BLK: Off
Range: FlexLogic operand

MESSAGE
LOSS OF EXCITATION TARGET: Self-reset
Range: Self-reset, Latched, Disabled

MESSAGE
LOSS OF EXCITATION EVENTS: Disabled
Range: Disabled, Enabled

The operating characteristic is shaped out of two offset mho circles shifted down along the imaginary axis as shown below.

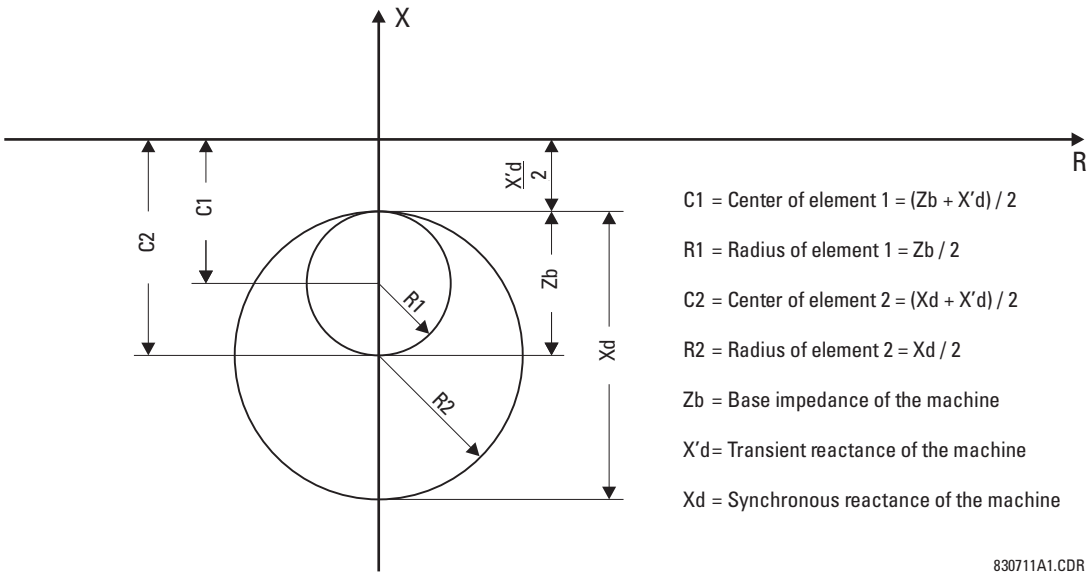

Figure 5–124: LOSS OF EXCITATION OPERATING CHARACTERISTICS

STAGE 1 SETTINGS:

The stage 1 characteristic is typically set to detect a loss of excitation for load conditions of 30% of the nominal or higher. This is achieved with a mho element with a diameter equal to the base impedance of the machine and an offset equal to half the machine transient reactance (*X'd*).

$$\text{CENTER 1} = \frac{Zb + X'd}{2}, \quad \text{RADIUS 1} = \frac{Zb}{2} \qquad \textbf{(EQ 5.33)}$$

The stage 1 element should be time delayed to allow for blocking by the VT fuse failure element (50 ms).

STAGE 2 SETTINGS:

The stage 2 characteristic is typically set to detect a loss of excitation for all load conditions. This is achieved with a mho element with a diameter equal to the synchronous reactance of the machine and an offset equal to half the machine transient reactance (*X'd*).

$$\text{CENTER 2} = \frac{Xd + X'd}{2}, \quad \text{RADIUS 1} = \frac{Xd}{2} \qquad \textbf{(EQ 5.34)}$$

During stable power swing conditions the positive-sequence impedance may momentarily enter the stage 2 characteristic. For security of the function under such conditions, it is recommended to delay stage 2 by a minimum of 0.5 seconds.

The **LOSS OF EXCIT BLK** setting specifies a FlexLogic operand for blocking the feature based on user-programmable conditions. When the blocking input is asserted, the element resets its timers, de-asserts the PKP and OP operands (if asserted), clears self-reset targets, logs a 'blocked' event if events are enabled, and becomes inactive. When unblocked, the element will start functioning instantly. If exposed to pickup conditions for an extended period of time and unblocked, the element will pickup and start timing out at the moment of unblocking.

The element responds to the positive sequence impedance as shown below.

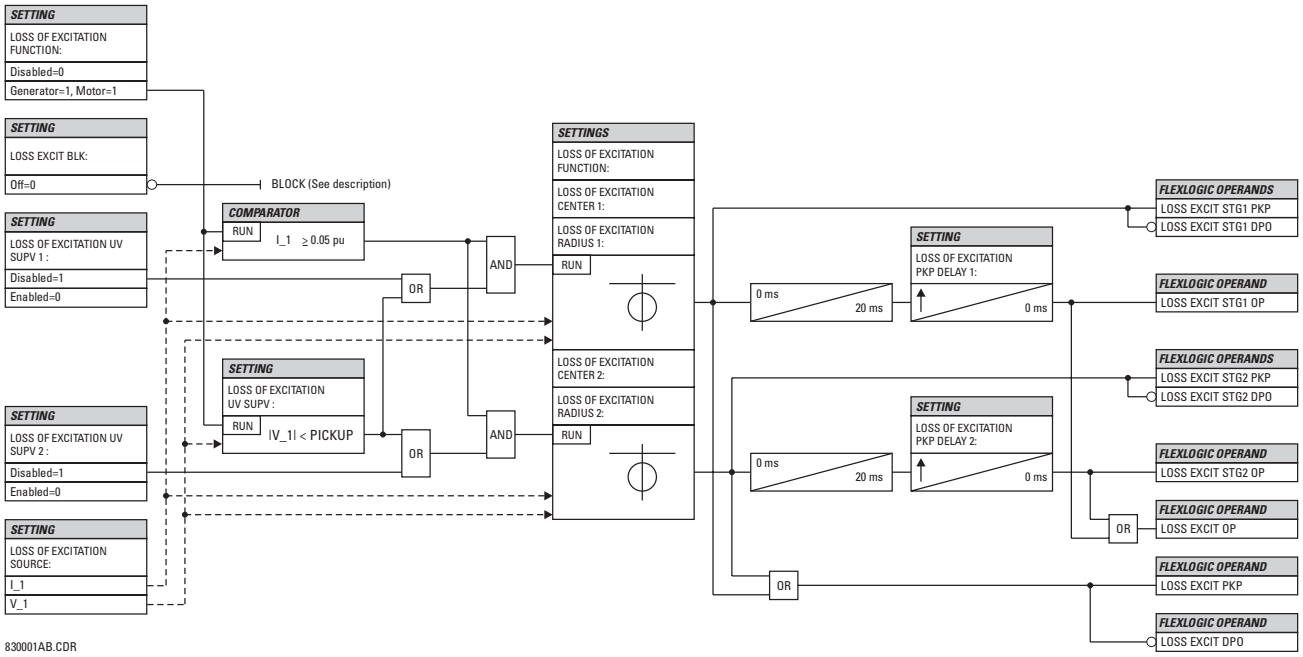

Figure 5–125: LOSS OF EXCITATION SCHEME LOGIC

5.6.15 ACCIDENTAL ENERGIZATION (ANSI 50/27)

PATH: SETTINGS ⇩ GROUPED ELEMENTS ⇨ SETTING GROUP 1(6) ⇨⇩ ACCIDENTAL ENERGIZATION

■ ACCIDENTAL ■ ENERGIZATION		ACCDNT ENRG FUNCTION: Disabled	*Range: Disabled, Enabled*
	MESSAGE	ACCDNT ENRG SOURCE: SRC 1	*Range: SRC 1, SRC 2, SRC 3, SRC 4*
	MESSAGE	ACCDNT ENRG ARMING MODE: UV and Offline	*Range: UV and Offline, UV or Offline*
	MESSAGE	ACCDNT ENRG OC PICKUP: 0.300 pu	*Range: 0.000 to 3.000 pu in steps of 0.001*
	MESSAGE	ACCDNT ENRG UV PICKUP: 0.500 pu	*Range: 0.000 to 3.000 pu in steps of 0.001*
	MESSAGE	ACCDNT ENRG OFFLINE: Off	*Range: FlexLogic operand*
	MESSAGE	ACCDNT ENRG BLOCK: Off	*Range: FlexLogic operand*
	MESSAGE	ACCDNT ENRG TARGET: Self-reset	*Range: Self-reset, Latched, Disabled*
	MESSAGE	ACCDNT ENRG EVENTS: Disabled	*Range: Disabled, Enabled*

This element provides protection against energization while the generator is at standstill or reduced speed. The feature is armed using either the AND or OR combination of the undervoltage and machine off-line conditions, selected with the **ACCDNT ENRG ARMING MODE** setting (see below). The undervoltage condition is determined from the measured voltages. The machine off-line status is indicated by a dedicated FlexLogic operand. Once armed, the accidental energization feature operates upon detecting an overcurrent condition in any of the stator phases.

This feature can also provide protection against poor synchronization.

- **ACCDNT ENRG ARMING MODE:** This setting specifies whether the feature gets armed by *either* of the undervoltage or machine off-line conditions ("UV or Off-line" value), or by *both* the conditions ("UV and Off-line" value). In both cases, the element is armed after 5 seconds of the appropriate condition and de-armed 250 ms after the arming condition (UV and/or Off-line) ceases.

  The "UV or Off-line" selection shall be made when the VTs are on the power system side of the disconnecting device. If this is the case, the measured voltages may be normal regardless of the status of the protected machine, thus the need for an OR condition. The "UV or Off-line" value provides protection against poor synchronization. During normal synchronization, there should be relatively low current measured. If however, synchronization is attempted when conditions are not appropriate, a large current would be measured shortly after closing the breaker. Since this feature does not de-arm immediately, but after a 250 ms time delay, this will result in operation under imprecise synchronization. The **ACCDNT ENRG OC PICKUP** setting can control the required precision of synchronization.

  The "UV and Off-line" value shall be made when the VTs are on the generator side of the disconnecting device. If this is the case, both the undervoltage and machine off-line conditions are required to indicate that the protected generator is not energized.

- **ACCDNT ENRG OC PICKUP:** This setting specifies the current level required to operate the armed Accidental Energization element. If any of the phase current is above the **ACCDNT ENRG OC PICKUP** level, the feature operates.

- **ACCDNT ENRG UV PICKUP:** This setting specifies the voltage level required to arm the Accidental Energization element. All of the line-to-line voltages must drop below the **ACCDNT ENRG UV PICKUP** level in order to detect the undervoltage condition. The setting is entered in voltage pu values. As the element always responds to the line-to-line voltages, care must be applied in picking up the value depending on the VT connection.

- **ACCDNT ENRG OFFLINE**: This setting specifies the FlexLogic operand indicating that the protected generator is off-line.

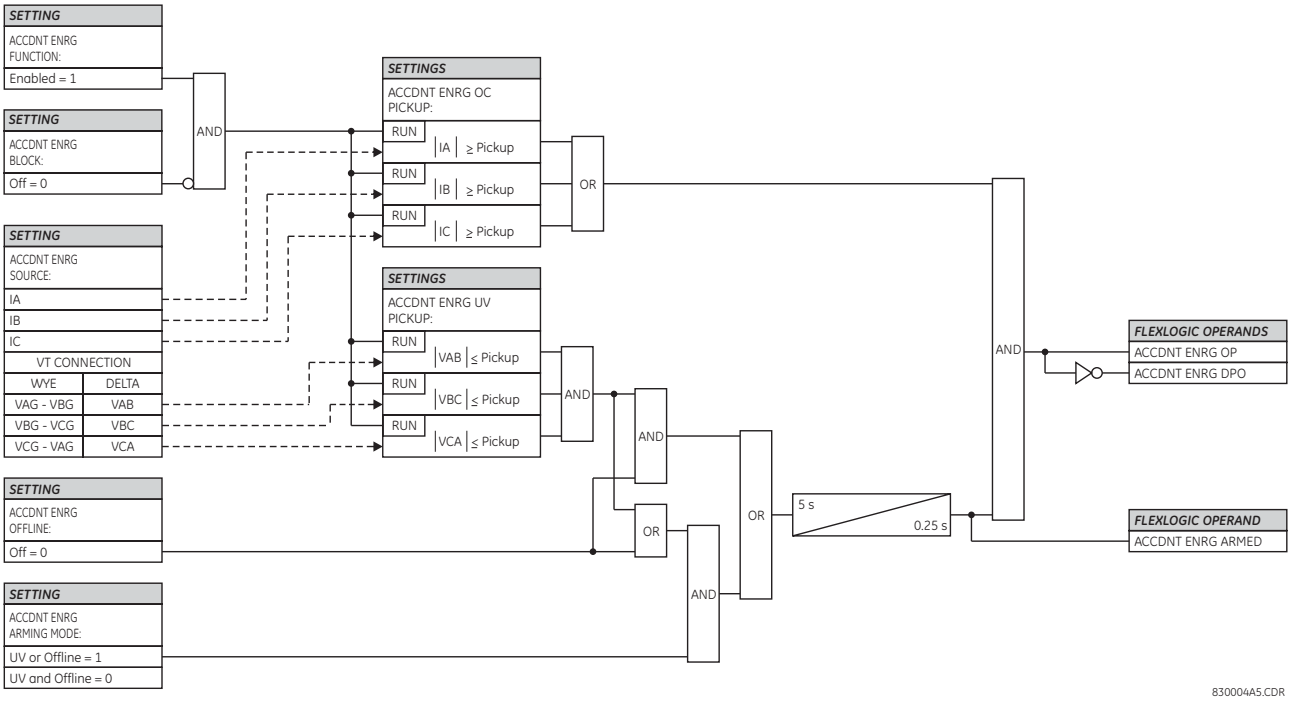

Figure 5–126: ACCIDENTAL ENERGIZATION SCHEME LOGIC

5.6.16 SENSITIVE DIRECTIONAL POWER (ANSI 32)

PATH: SETTINGS ⇨⇩ GROUPED ELEMENTS ⇨ SETTING GROUP 1(6) ⇨⇩ POWER ⇨ SENSITIVE DIRECTIONAL POWER ⇨ DIRECTIONAL POWER 1(2)

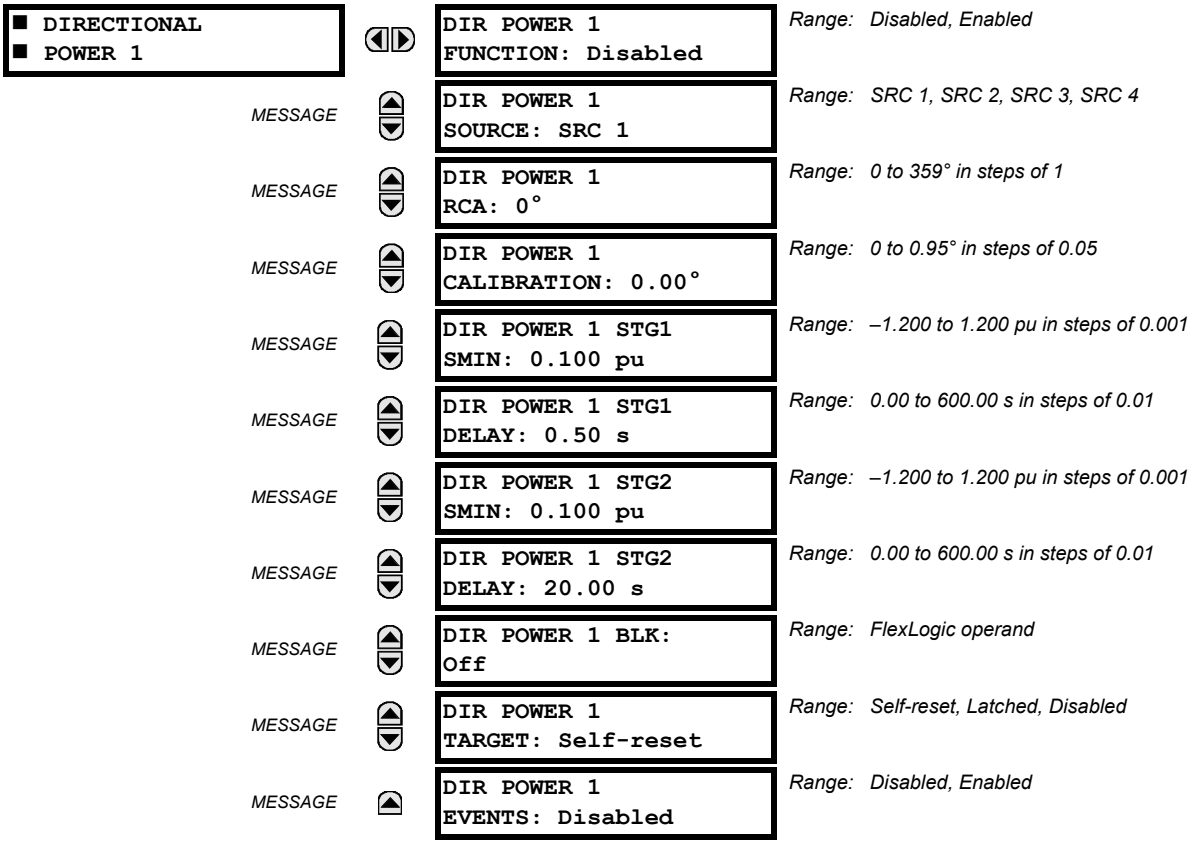

The sensitive directional power element responds to three-phase directional power and is designed for reverse power and low forward power applications for synchronous machines or interconnections involving co-generation. The relay measures the three-phase power from either full set of wye-connected VTs or full-set of delta-connected VTs. In the latter case, the two-wattmeter method is used. Refer to the Metering Conventions section in chapter 6 for details regarding the active and reactive powers used by the sensitive directional power element.

The element has an adjustable characteristic angle and minimum operating power as shown in the Directional Power Characteristic diagram. The element responds to the following condition:

$$P\cos\theta + Q\sin\theta > SMIN \quad \textbf{(EQ 5.35)}$$

where: P and Q are active and reactive powers as measured per the UR-series metering convention,
θ is a sum of the element characteristic (**DIR POWER 1 RCA**) and calibration (**DIR POWER 1 CALIBRATION**) angles, and
$SMIN$ is the minimum operating power

The operating quantity is displayed in the ACTUAL VALUES ⇨ METERING ⇨⇩ SENSITIVE DIRECTIONAL POWER 1(2) actual value. The element has two independent (as to the pickup and delay settings) stages for alarm and trip, respectively.

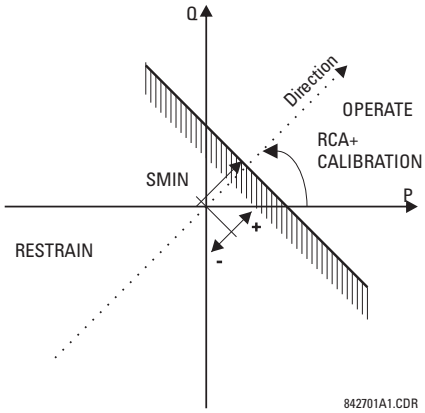

Figure 5–127: DIRECTIONAL POWER CHARACTERISTIC

By making the characteristic angle adjustable and providing for both negative and positive values of the minimum operating power a variety of operating characteristics can be achieved as presented in the figure below. For example, section (a) in the figure below shows settings for reverse power, while section (b) shows settings for low forward power applications.

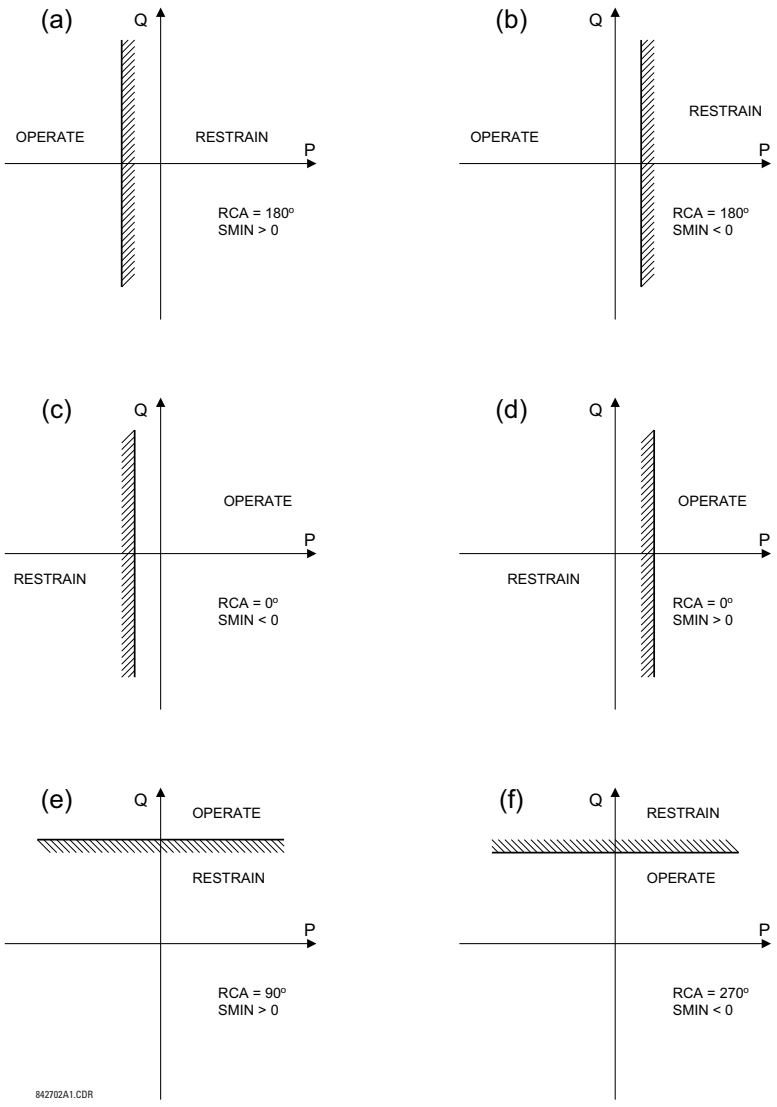

Figure 5–128: DIRECTIONAL POWER ELEMENT SAMPLE APPLICATIONS

- **DIR POWER 1 RCA:** Specifies the relay characteristic angle (RCA) for the sensitive directional power function. Application of this setting is threefold:

  1. It allows the element to respond to active or reactive power in any direction (active overpower/underpower, etc.).
  2. Together with a precise calibration angle, it allows compensation for any CT and VT angular errors to permit more sensitive settings.
  3. It allows for required direction in situations when the voltage signal is taken from behind a delta-wye connected power transformer and the phase angle compensation is required.

  For example, the active overpower characteristic is achieved by setting **DIR POWER 1 RCA** to "0°", reactive overpower by setting **DIR POWER 1 RCA** to "90°", active underpower by setting **DIR POWER 1 RCA** to "180°", and reactive underpower by setting **DIR POWER 1 RCA** to "270°".

- **DIR POWER 1 CALIBRATION:** This setting allows the relay characteristic angle to change in steps of 0.05°. This may be useful when a small difference in VT and CT angular errors is to be compensated to permit more sensitive settings. This setting virtually enables calibration of the directional power function in terms of the angular error of applied VTs and CTs. The element responds to the sum of the **DIR POWER 1 RCA** and **DIR POWER 1 CALIBRATION** settings.

- **DIR POWER 1 STG1 SMIN:** This setting specifies the minimum power as defined along the relay characteristic angle (RCA) for the stage 1 of the element. The positive values imply a shift towards the operate region along the RCA line; the negative values imply a shift towards the restrain region along the RCA line. Refer to the *Directional power sample applications* figure for details. Together with the RCA, this setting enables a wide range of operating characteristics. This setting applies to three-phase power and is entered in per-unit (pu) values. The base quantity is 3 x VT pu base x CT pu base.

  For example, a setting of 2% for a 200 MW machine is 0.02 × 200 MW = 4 MW. If 13.8kV is line voltage and 10 kA is a primary CT current, the source pu quantity is 239 MVA, and thus, SMIN should be set at 4 MW / 239 MVA = 0.0167 pu ≈ 0.017 pu. If the reverse power application is considered, RCA = 180° and SMIN = 0.017 pu.

  The element drops out if the magnitude of the positive-sequence current becomes virtually zero, that is, it drops below the cutoff level.

- **DIR POWER 1 STG1 DELAY:** This setting specifies a time delay for stage 1. For reverse power or low forward power applications for a synchronous machine, stage 1 is typically applied for alarming and stage 2 for tripping.

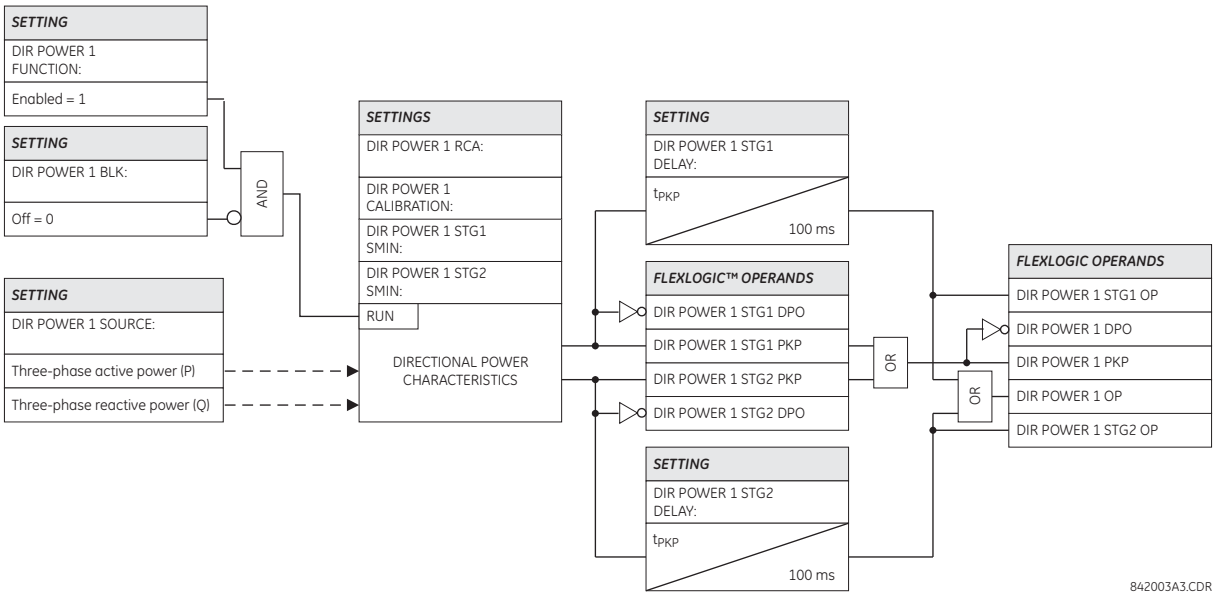

Figure 5–129: SENSITIVE DIRECTIONAL POWER SCHEME LOGIC

5.6.17 STATOR GROUND

a) MAIN MENU

PATH: SETTINGS ⇨⇩ GROUPED ELEMENTS ⇨ SETTING GROUP 1(6) ⇨⇩ STATOR GROUND

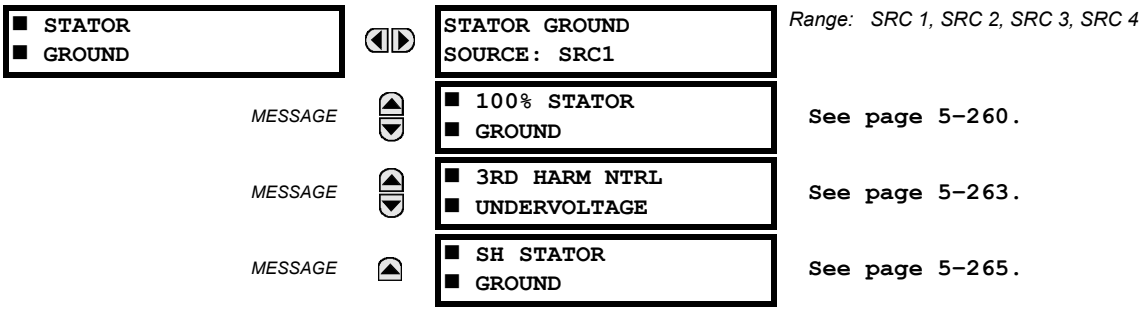

Three means of stator ground fault protection are provided:

- 100% stator ground protection that uses third harmonic signals at the neutral of the machine and in the zero-sequence voltage of the machine terminals.

- Third harmonic neutral undervoltage protection that responds to the third harmonic in the voltage at the machine neutral point.
- 100% stator ground protection based on sub-harmonic injection.

The three protection elements are configured through their individual setting menus. They share the **STATOR GROUND SOURCE** setting. This setting specifies a signal source used to provide current and voltage signals for stator ground fault protection.

For the 100% stator ground protection function, the stator ground source shall be configured as follows:

- Phase voltages measured at the terminal of the machine shall be configured as phase VT banks. The element extracts the third harmonic of the zero-sequence voltage from the phase voltages in order to operate. The VTs must be connected in wye.
- Voltage measured at the neutral of the machine shall be configured as the auxiliary VT bank. The element extracts the third harmonic of the auxiliary voltage from the source in order to operate.

For the third harmonic neutral undervoltage protection function, the stator ground source shall be configured as follows:

- Phase voltages measured at the terminal of the machine shall be configured as phase VT banks. The element uses the voltages to measure the power at the machine terminals for power supervision.
- Phase currents measured at the terminal of the machine shall be configured as phase CT banks. The element uses the currents to measures the power at the machine terminals for power supervision.
- Voltage measured at the neutral of the machine shall be configured as the auxiliary VT bank. The element extracts the third harmonic of the auxiliary voltage from the source in order to operate.

For the sub-harmonic injection based 100% stator ground protection, the stator ground source shall be configured as follows:

- Voltage measured at the neutral of the machine shall be configured as the auxiliary VT bank. The element extracts the 20 Hz component of the auxiliary voltage from the source in order to calculate resistance. The fundamental frequency component from the same input is extracted when the same source is configured for auxiliary overvoltage protection element to provide 95% stator ground fault protection. The auxiliary VT connection setting should be chosen as “Vn” for this element.
- Current measured at the secondary of the neutral grounding transformer of the machine shall be configured as the sensitive ground CT bank. The element extracts the 20 Hz component of the ground current from the source in order to calculate resistance.
- This source can be independent of any of the other inputs from the generator such as neutral end CTs, terminal end CTs and terminal VTs. Or these auxiliary VT and sensitive ground CT can be combined with either neutral side or terminal side inputs within the same source settings.
- In addition the relay should be set properly with frequency tracking enabled and the source used as **FREQUENCY AND PHASE REFERENCE** should be the one connected to generator terminal VTs. The tracking frequency, which is essentially the generator frequency, will be used to block the sub-harmonic stator ground protection and auxiliary over voltage protection in the frequency range of 15 to 25 Hz.

b) 100% STATOR GROUNDP (ANSI 64TN)

PATH: SETTINGS ⇨⇩ GROUPED ELEMENTS ⇨ SETTING GROUP 1(6) ⇨ STATOR GROUND ⇨⇩ 100% STATOR GROUND

■ 100% STATOR GROUND		100% STATOR GROUND FUNCTION: Disabled	Range: Disabled, Enabled
	MESSAGE	100% STATOR GND STG1 PICKUP: 0.150 pu	Range: 0.000 to 0.900 pu in steps of 0.001
	MESSAGE	100% STATOR GND STG1 DELAY: 1.00 s	Range: 0.00 to 600.00 s in steps of 0.01
	MESSAGE	100% STATOR GND STG1 SUPV: 0.0057 pu	Range: 0.0010 to 0.1000 pu in steps of 0.0001
	MESSAGE	100% STATOR GND STG2 PICKUP: 0.150 pu	Range: 0.000 to 0.900 pu in steps of 0.001
	MESSAGE	100% STATOR GND STG2 DELAY: 0.00 s	Range: 0.00 to 600.00 s in steps of 0.01
	MESSAGE	100% STATOR GND STG2 SUPV: 0.0045 pu	Range: 0.0010 to 0.1000 pu in steps of 0.0001
	MESSAGE	100% STATOR GND BLK: Off	Range: FlexLogic operand
	MESSAGE	100% STATOR GROUND TARGET: Self-reset	Range: Self-reset, Latched, Disabled
	MESSAGE	100% STATOR GROUND EVENTS: Disabled	Range: Disabled, Enabled

The 100% stator ground function responds to third harmonic voltage measured at the generator neutral and output terminals. When used in conjunction with the neutral overvoltage (fundamental frequency) element, it provides 100% ground fault protection of the stator windings. Since the amount of third harmonic voltage that appears in the neutral is both load and machine dependent, the protection method of choice is an adaptive method. The following formula is used to create an adaptive operating quantity based on the amount of third harmonic that appears at the generator terminals.

$$\frac{|V_{N(3rd)}|}{|V_{N(3rd)} + V_{0(3rd)}|} < \text{Pickup} \quad \text{and} \quad \frac{|V_{0(3rd)}|}{|V_{N(3rd)} + V_{0(3rd)}|} > 1 - \text{Pickup} \quad \text{and} \quad |V_{N(3rd)} + V_{0(3rd)}| > \text{Supervision} \qquad \textbf{(EQ 5.36)}$$

where: $V_{N(3rd)}$ is a magnitude of the 3rd harmonic in the voltage measured at the machine neutral point measured via an auxiliary channel of the VT bank, and
$V_{0(3rd)}$ is a magnitude of the 3rd harmonic in the zero-sequence voltage measured at the machine terminals.

NOTE

This element requires wye-connected VTs for measurement of the third harmonic in the zero-sequence voltage at the generator output terminals.

Example 1: Operating quantities under normal conditions.

Consider the figure shown below. In the case of a high impedance grounded machine, the neutral resistor is typically chosen such that power dissipated in the resistor during a single line to ground fault is approximately equal to the reactive power produced by the zero sequence capacitance of the stator winding and the GSU LV winding (X_{oc}). At power system frequencies, the neutral resistance is therefore equal to $X_{oc}/3$, and at $3 \times F_n$, the neutral resistance is X_{oc}.

For analysis, assume that $E_3 = 10$ V, $R = 5\Omega$, and $X_c = 5\Omega$.

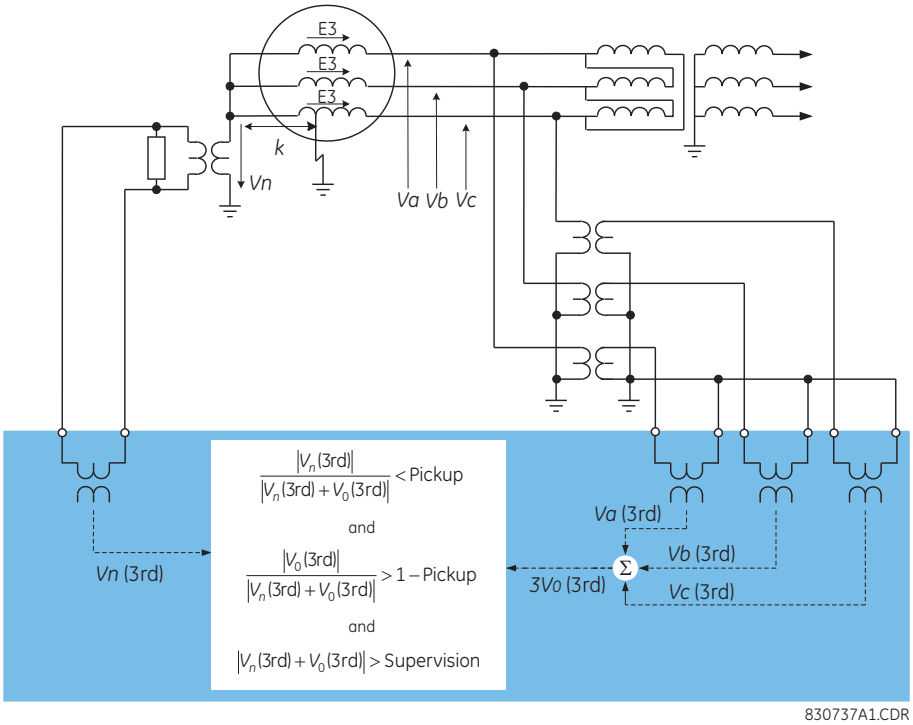

Figure 5–130: 100% STATOR GROUND APPLICATION EXAMPLE

We have the magnitude of neutral voltage V_N as:

$$V_N = \frac{R \times E_3}{R - jX_c} = \frac{10 \times 5}{5 - j5}\ \text{V} = \frac{10}{1 - j}\ \text{V}$$
$$\Rightarrow |V_N| = 7.07\ \text{V} \quad \textbf{(EQ 5.37)}$$

and the magnitude of the neutral and zero-sequence voltages $|V_N + V_0|$ as:

$$V_0 = \frac{-jX_c \times E_3}{R - jX_c} = \frac{-j50}{5 - j5} = \frac{-j10}{1 - j} \Rightarrow V_N + V_0 = \frac{10 - j10}{1 - j}$$
$$\Rightarrow |V_N + V_0| = 10\ \text{pu} \quad \textbf{(EQ 5.38)}$$

Therefore, under the normal conditions described above, we set the operating quantities as follows:

$$\text{Pickup} > \frac{|V_N|}{|V_N + V_0|} = \frac{7.07}{10} = 0.707\ \text{pu}$$
$$\text{Supervision} < |V_N + V_0| = 10\ \text{pu} \quad \textbf{(EQ 5.39)}$$

In actual practice, the $|V_N| / |V_N + V_0|$ ratio may vary from 0.4 to 0.85 under normal conditions. The pickup and supervision setpoints are determined by evaluating the operating quantities during a fault condition (refer to example 2 for details).

Example 2: Operating quantities for a fault at a fraction *k* from the neutral grounding point.

For analysis, consider the above figure and assume that $E_3 = 10$ V, $R = 5\Omega$, $X_c = 5\Omega$, and $k = 0.15$.

In this case, we have the magnitude of the neutral voltage at:

$$V_N = k \times E_3 = 0.15 \times 10 = 1.5 \quad \textbf{(EQ 5.40)}$$

and the magnitude of the neutral and zero-sequence voltages $|V_N + V_0|$ as:

$$V_0 = \frac{(1-k)E_3 + (1-k)E_3 + (1-k)E_3}{3} = \frac{3 \times 0.85 \times 10}{3} = 8.5 \Rightarrow V_N + V_0 = 8.5 + 1.5 = 10$$
$$\Rightarrow |V_N + V_0| = 10 \text{ pu} \quad \text{(EQ 5.41)}$$

Therefore, for faults at a fraction $k = 0.15$ from the neutral grounding point, we set the operating quantities as follows:

$$\text{Pickup} > \frac{|V_N|}{|V_N + V_0|} = \frac{1.5}{10} = 0.15 \text{ pu}$$
$$\text{Supervision} < |V_N + V_0| = 10 \text{ pu} \quad \text{(EQ 5.42)}$$

The 100% stator ground settings are described below.

- **100% STATOR GND STG1 PICKUP:** This setting specifies a pickup level for the operating quantity. It may be beneficial to measure the operating quantity under various load conditions for a particular machine in order to optimize this setting. This can be achieved using the actual values menu of the G60.
- **100% STATOR GND STG1 DELAY:** This setting specifies a time delay required to operate after the pickup condition is established.
- **100% STATOR GND STG1 SUPV:** This setting specifies a signal level supervision for the vectorial sum of the third harmonic at the machine neutral and in the zero-sequence terminal voltage. The setting is entered as a per-unit value of the terminal voltages. Different settings may be considered for stages 1 and 2 as one of them could be used for alarm and the other for trip. The safe value of this setting could be established after putting a given machine into service and reading the quantity from the relay under **ACTUAL VALUES** menu.

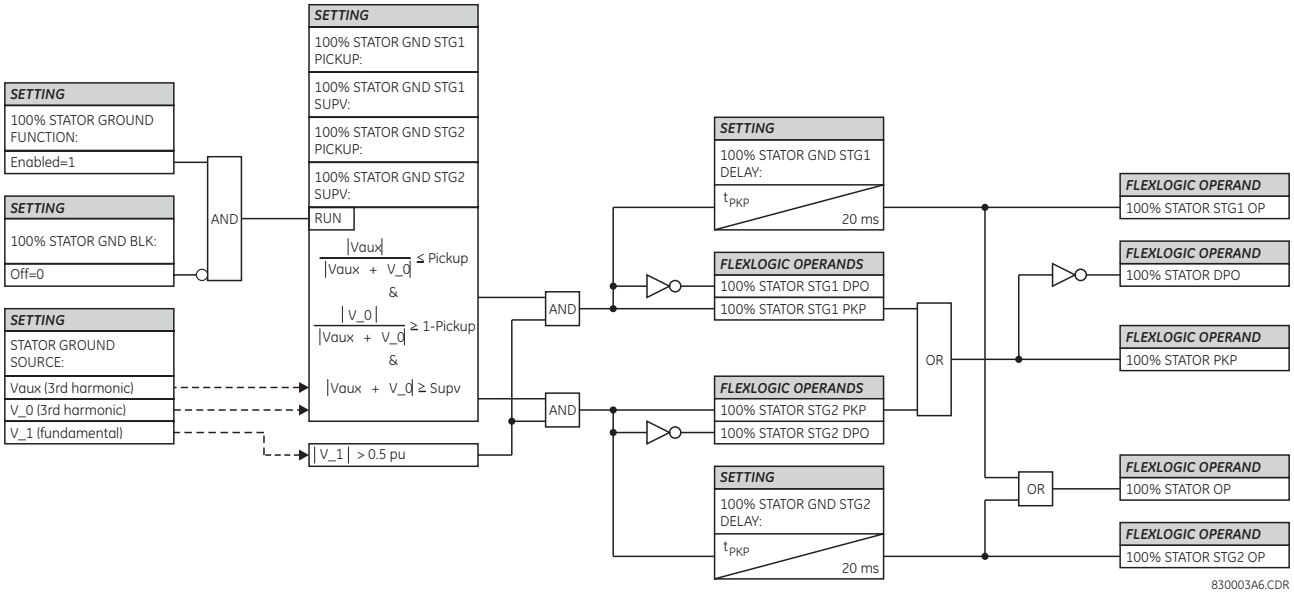

Figure 5–131: 100% STATOR GROUND SCHEME LOGIC

c) THIRD HARMONIC NEUTRAL UNDERVOLTAGE (ANSI 27TN)

PATH: SETTINGS ⇨⇩ GROUPED ELEMENTS ⇨ SETTING GROUP 1(6) ⇨⇩ STATOR GROUND ⇨⇩ 3RD HARM NTRL UNDERVOLTAGE

■ 3RD HARM NTRL UNDERVOLTAGE		3RD HARM NTRL UV FUNCTION: Disabled	Range: Disabled, Enabled
	MESSAGE	3RD HARM NTRL UV PICKUP: 0.3000 pu	Range: 0.0000 to 3.0000 pu in steps of 0.0001
	MESSAGE	3RD HARM NTRL UV PKP DELAY: 0.00 s	Range: 0.00 to 600.00 s in steps of 0.01
	MESSAGE	3RD HARM NTRL UV MAX POWER: 0.200 pu	Range: 0.000 to 1.250 pu in steps of 0.001
	MESSAGE	3RD HARM NTRL UV MIN POWER: 0.200 pu	Range: 0.000 to 1.250 pu in steps of 0.001
	MESSAGE	3RD HARM NTRL UV VOLT SUPV: 0.500 pu	Range: 0.000 to 1.250 pu in steps of 0.001
	MESSAGE	3RD HARM NTRL UV BLK: Off	Range: FlexLogic operand
	MESSAGE	3RD HARM NTRL UV TARGET: Self-reset	Range: Self-reset, Latched, Disabled
	MESSAGE	3RD HARM NTRL UV EVENTS: Disabled	Range: Disabled, Enabled

The third harmonic neutral undervoltage function detects a loss of third harmonic voltage at the generator neutral. The percentage of stator winding covered by this function depends on the pickup setting and the amount of third harmonic generated by the machine at the time of the fault. A settable window of forward power can supervise this element for enhanced security. The element is also supervised by positive-sequence voltage measured at the generator output terminals. This element can be used with either wye or delta connected VTs on the terminal side and requires the machine neutral voltage to be connected via an auxiliary voltage channel of a relay VT bank.

- **3RD HARM NTRL UV PICKUP:** This setting specifies the pickup level for the magnitude of the third harmonic of the neutral voltage. This setting is entered in pu of the nominal auxiliary voltage.

  The magnitude of the third harmonic voltage at the neutral point is monitored in the ACTUAL VALUES ⇨⇩ METERING ⇨⇩ STATOR GROUND menu. Measuring the actual value of the operating quantity for a specific machine under variety of load conditions may be helpful when selecting the pickup threshold for this feature.

- **3RD HARM NTRL UV MAX POWER:** This setting specifies the maximum active power that inhibits this protection function. If the measured power is below this setting but above the **3RD HARM NTRL UV MIN POWER** setting the element shall not operate. This setting applies to three-phase power and is entered in pu. The base quantity is 3-phase power on primary side, which is calculated as $\sqrt{3}$ x Phase CT Primary x Phase VT Ratio x Phase VT Secondary in case of delta connected VTs; and 3 x Phase CT Primary x Phase VT Ratio x Phase VT Secondary in case of wye connected VTs.

  For example, a setting of 20% for a 200 MW machine, is 0.20 × 200 MW = 40 MW. If 7.967 kV is a primary VT voltage and 10 kA is a primary CT current, the source pu quantity is 239 MVA, and thus, the pu power setting is 40 MW / 239 MVA = 0.167 pu.

- **3RD HARM NTRL UV MIN POWER:** This setting specifies the minimum active power that inhibits this protection function. If the measured power is above this setting but below the **3RD HARM NTRL UV MAX POWER** setting the element shall not operate. If the **3RD HARMONIC NTRL UV MIN POWER** is set to "0.00 pu", then the element does not operate for all power values less than the **3RD HARM NTRL UV MAX POWER** setting.

  This setting applies to three-phase power and is entered in pu. The base quantity is 3-phase power on primary side, which is calculated as $\sqrt{3}$ x Phase CT Primary x Phase VT Ratio x Phase VT Secondary in case of delta connected VTs; and 3 x Phase CT Primary x Phase VT Ratio x Phase VT Secondary in case of wye connected VTs.

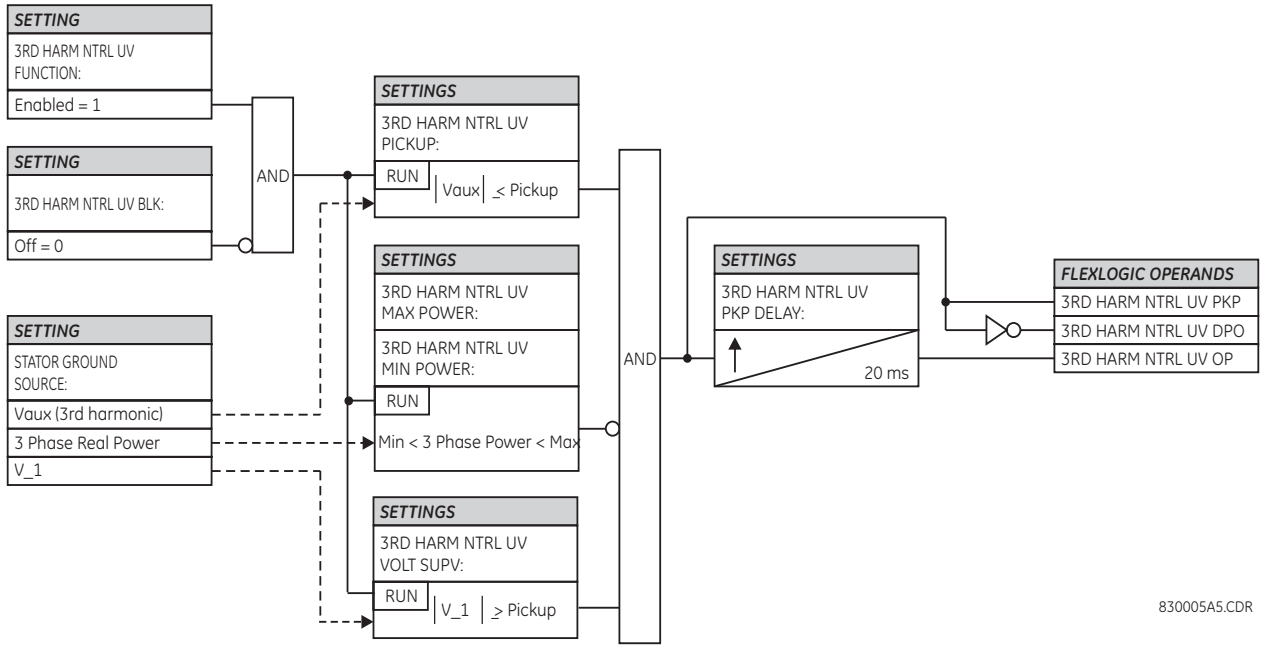

Figure 5–132: THIRD HARMONIC NEUTRAL UNDERVOLTAGE SCHEME LOGIC

5

d) SUB-HARMONIC STATOR GROUND FAULT (ANSI 64S)

PATH: SETTINGS ⇨⇩ GROUPED ELEMENTS ⇨ SETTING GROUP 1(6) ⇨ STATOR GROUND ⇨⇩ SH STATOR GROUND

■ SH STATOR ■ GROUND		SH STATOR GROUND FUNCTION: Disabled	*Range: Disabled, Enabled*
	MESSAGE	SH STATOR GND STG1 PICKUP: 10 kΩ	*Range: 1 to 20 kΩ in steps of 1*
	MESSAGE	SH STATOR GND STG1 DELAY: 10.0 s	*Range: 0.1 to 600.0 s in steps of 0.1*
	MESSAGE	SH STATOR GND STG2 PICKUP: 3 kΩ	*Range: 1 to 20 kΩ in steps of 1*
	MESSAGE	SH STATOR GND STG2 DELAY: 1.0 s	*Range: 0.1 to 600.0 s in steps of 0.1*
	MESSAGE	SH CT ANGLE COMPEN: 0.0 degrees	*Range: –30.00 to 30.00 degrees in steps of 0.01*
	MESSAGE	SH STATOR GND OC PICKUP: 0.010 pu	*Range: 0.001 to 1.000 pu in steps of 0.001*
	MESSAGE	SH STATOR GND OC DELAY: 1.00 s	*Range: 0.10 to 600.00 s in steps of 0.01*
	MESSAGE	SH STATOR GND Vsupv: 0.000 pu	*Range: 0.000 to 0.100 pu in steps of 0.001*
	MESSAGE	SH STATOR GND Isupv: 0.000 pu	*Range: 0.000 to 0.100 pu in steps of 0.001*
	MESSAGE	SH STATOR GND BLK: Off	*Range: FlexLogic operand*
	MESSAGE	SH STATOR GROUND TARGET: Self-reset	*Range: Self-reset, Latched, Disabled*
	MESSAGE	SH STATOR GROUND EVENTS: Disabled	*Range: Disabled, Enabled*

A voltage source placed at the neutral of the generator will produce a current for ground faults anywhere on the stator winding. This source is coupled to the primary circuit using the existing neutral grounding transformer. The following figure shows a typical high impedance grounded generator that is protected against ground faults using the sub-harmonic injection method. The neutral resistor is chosen to limit the ground fault current to a low value (less than 25 A) in order to minimize damage. A sub-harmonic frequency voltage signal is injected into the neutral of the generator. Under normal conditions a resulting current flows through the surge capacitors (C_s) and through the stray capacitance of the stator and step-up transformer windings. When a ground fault develops on the stator winding, an additional current flows through the resistance R_G. The value of R_G is derived from the measurement of the injected voltage and the resulting current.

An AC signal is injected so that it can be coupled through an injection transformer to the primary circuit. The signal is of a low frequency in order to minimize the effects of the capacitance of the primary circuit. A frequency of 20 Hz is chosen.

Referring to the following figure, the admittance seen looking into the grounding transformer is:

$$Y = \frac{1}{N^2} \times \frac{I_G}{V_X} = \frac{1}{R_G} + j\omega C_T \qquad \textbf{(EQ 5.43)}$$

In the above equation:

- R_G is the ground fault resistance.
- C_T is the total capacitance to ground.
- N is the neutral grounding transformer ratio.

- V_X is the measured sub-harmonic voltage.
- I_G is the measured sub-harmonic current.

The ground fault resistance can be easily calculated by measuring the 20 Hz voltage and current phasors at the secondary of the grounding transformer. This is done by the G60. An overcurrent element responding to the sub-harmonic provides backup protection.

For machines that may operate at sub-synchronous frequencies (for instance a gas turbine that employs static starting), the function is blocked at frequencies between 15 and 25 Hz. This ensures that the voltage and current produced by the generator does not leak into the sub-harmonic ground fault measurements.

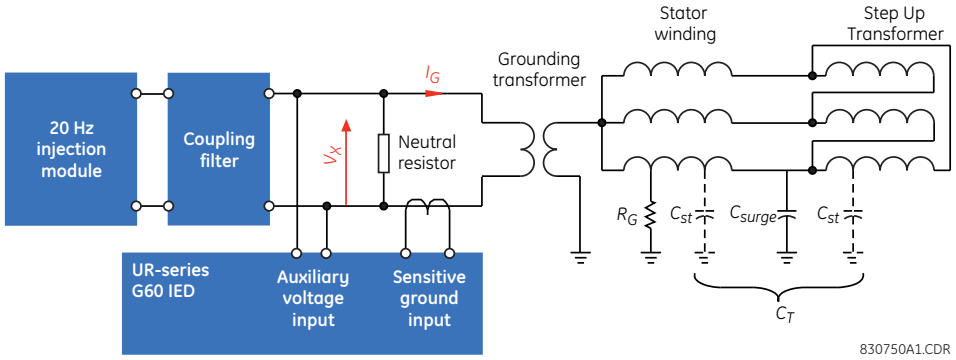

Figure 5–133: STATOR GROUND FAULT DETECTION BY SUB-HARMONIC INJECTION

In addition, a check for minimum values of injected voltage and current guards against a failure of the injection unit or a short or open circuit in the external circuit. In addition, the critical-fail relay contact of the 20 Hz generator can also be connected to one of the contact inputs of G60 and the sub-harmonic stator ground element may be blocked.

The stator ground source settings determine the signals that are applied for V_X, I_G, and frequency. The resistance is reported in primary ohms. Therefore the VT ratio setting of the auxiliary VT input must match the turns ratio of the neutral grounding transformer and the CT primary setting of the ground CT input must match that of the CT used to measure ground current.

When the magnitude of R_G is large the resulting current I_G will be very small therefore the G60 sensitive ground input should be used to make this measurement. Thus a CT/VT module with sensitive ground current input should be present in a G60 if it were to be used for sub-harmonic stator ground protection.

Accessory modules required for sub-harmonic injection based stator ground protection:

- 20 Hz injection module (GE Multilin order code): GPM-S-G.
- Coupling filter (GE Multilin order code): GPM-S-B.
- Current transformer (GE order code): 204-SD-43737.

The following settings are available for the sub-harmonic stator ground fault feature.

- **SH STATOR GND STG1 PICKUP**: If the measured stator ground primary resistance is less than the value specified by this setting, the stage 1 element will pickup. Normally stage 1 is used to raise alarms and typical settings may fall in the range of 5 to 10 kΩ. This setting is given in primary ohms.
- **SH STATOR GND STG1 DELAY**: This setting specifies a time delay for stage 1. Typical settings are in the range of 5 to 10 seconds. This delay will have to be added to the operating time of the element to obtain the overall delay.
- **SH STATOR GND STG2 PICKUP**: If the measured stator ground primary resistance is less than the value specified this setting, stage 2 element will pickup. Normally stage 2 is used to raise trip signals and typical settings may fall in the range of 1 to 5 kΩ. This setting is given in primary ohms.
- **SH STATOR GND STG2 DELAY**: This setting specifies a time delay for stage 2. Typical settings are in the range of 1 to 2 seconds. This delay will have to be added to the operating time of the element to obtain the overall delay.
- **SH CT ANGLE COMPEN**: The CT used may introduce phase shifts and this should be compensated for accurate fault resistance calculations. Perform a test during commissioning at no fault condition by measuring the **SH CURRENT ANGLE** reported by the G60. In a healthy machine, the SH impedance is purely capacitive and the angle should be 90°.

The difference in angle can be used as the **SH CT ANGLE COMPEN** setting. The preferred method of doing this is by inserting a resistance equal to the **SH STATOR GND STG2 PICKUP** setting at the neutral of the generator and compensating the angle at this setting.

- **SH STATOR GND OC PICKUP**: This setting specifies the backup overcurrent pickup level based on sub-harmonic current. This protection can be used in addition to the sub-harmonic injection based 100% ground fault and fundamental phasor over voltage based 95% ground fault protection. One per-unit value of current is the sensitive ground CT secondary rating setting, which is always 5 A since the CT used is rated for 5 A secondary.
- **SH STATOR GND OC DELAY**: This setting specifies a time delay for sub-harmonic current based backup over current protection. Thermal capabilities of the loading resistor or neutral grounding transformer should be considered while setting this delay.
- **SH STATOR GND Vsupv**: The 20 Hz source can be monitored using this voltage supervision. This setting in pu provides the voltage level below which if the sub-harmonic voltage phasor magnitude remains for a period of 10 seconds, the SH STAT GND TRB OP operand will be asserted. One per-unit value of voltage is the auxiliary VT nominal secondary voltage setting or the equivalent primary voltage if used in primary. A typical setting of 1 V is suggested. However, when the neutral grounding transformer's load resistance is less than 0.5 ohms, the use of voltage supervision is not recommended.
- **SH STATOR GND Isupv**: The 20 Hz source can be monitored using this current supervision. This setting in per-unit values provides the current level below which if the sub-harmonic current phasor magnitude remains for a period of 10 seconds, the SH STAT GND TRB OP operand will be asserted. One per-unit current is the sensitive ground CT secondary rating setting or the primary rating if used in primary. A typical setting of 0.002 pu (=10 mA in secondary) is recommended with the provided 5 A secondary CT.

The logic for the sub-harmonic stator ground fault feature is shown below.

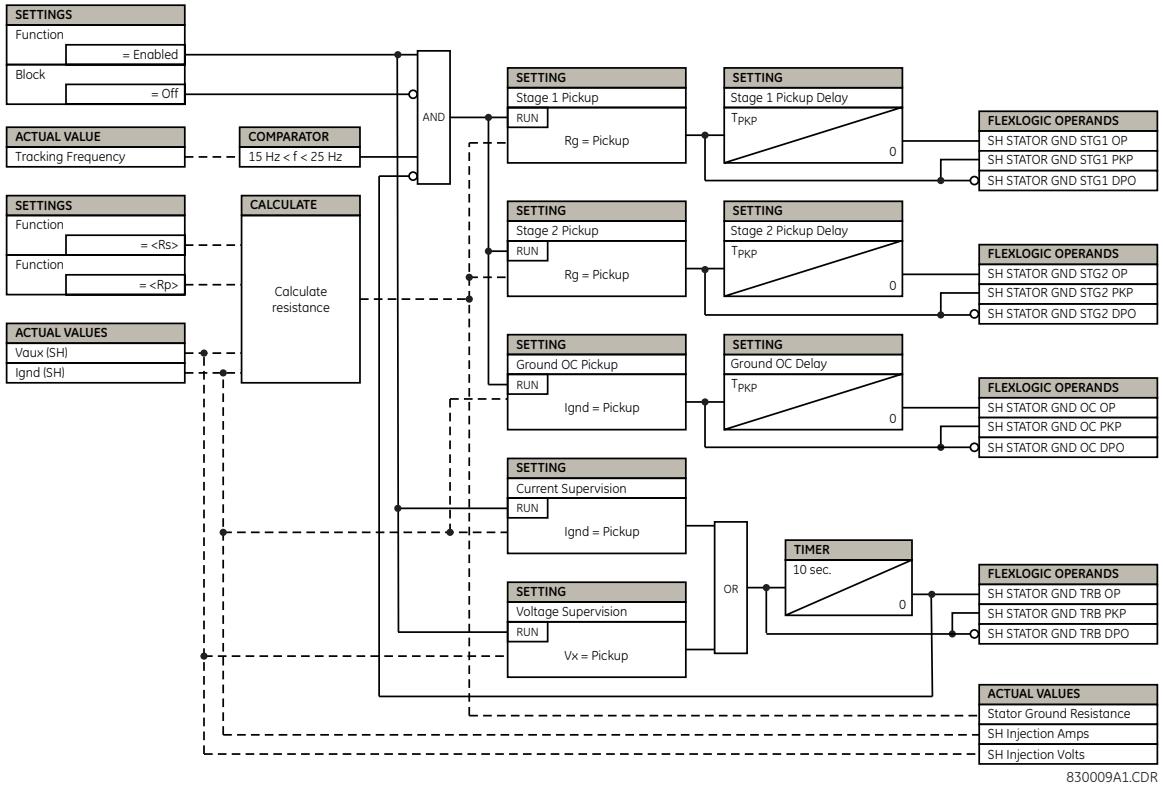

Figure 5–134: SUB-HARMONIC STATOR GROUND FAULT LOGIC

e) APPLICATION CONSIDERATIONS FOR SUB-HARMONIC STATOR GROUND FAULT DETECTOR

The following special application considerations must be followed when employing sub-harmonic injection based 100% stator ground protection.

1. A generator with wye-grounded primary VT will provide a path for the injected 20 Hz signal to flow through the ground. Thus the voltage measured using this VT will have both the fundamental and 20 Hz components superimposed at all times.
2. Special algorithms address impact of this 20 Hz component on the aux over voltage element, which is normally used for 95% ground fault protection by measuring NGT secondary voltage.
3. There are applications where a wye-grounded primary VT is normally used on the bus side of a generator breaker and a neutral over voltage is used to detect ground faults on the bus duct or cable, etc. In such applications, after careful analysis on the sensitivity of setting levels, this function may be blocked (if required) when the generator is online, since the sub-harmonic injection based protection covers this zone.
4. The third harmonic based stator ground fault protection elements should not be used while using the sub-harmonic injection based stator ground protection.
5. It is recommended that phase-phase voltages be used in G60 for the synchrocheck function rather than phase-to-ground voltages under applications where a single voltage is being connected to one of the auxiliary VT channels of G60 device.
6. The current from the CT in the secondary of the NGT fed to the sensitive ground input of G60 shall only be used for sub-harmonic based stator ground protection and not for any other protection element such as ground over current or neutral directional overcurrent.

5.6.18 FIELD GROUND FAULT PROTECTION (ANSI 64F)

a) MAIN MENU

PATH: SETTINGS ⇨⇩ GROUPED ELEMENTS ⇨ SETTING GROUP 1(6) ⇨⇩ FIELD GROUND PROTECTION

```
■ FIELD GROUND
■ PROTECTION
```

⇔

```
■ FIELD
■ GROUND
```

See page 5–270.

MESSAGE ⇧

```
■ FIELD
■ CURRENT
```

See page 5–272.

A block diagram of the field ground detection scheme using the G60 and the GPM-F is shown below. The field winding of a synchronous generator is represented electrically by the impedance $Z_F = Z_{F1} + Z_{F2}$. Under normal conditions the field circuit is ungrounded. The capacitance C_F is the stray capacitance of the field, distributed along the field winding. This capacitance represents the only path for current to flow to ground under normal conditions.

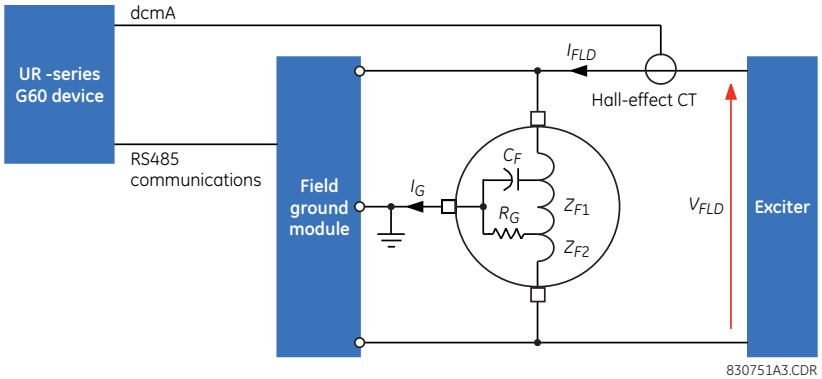

Figure 5–135: FIELD GROUND FAULT DETECTION

The resistance R_G represents a breakdown of the field winding insulation providing a resistive path to ground through the field grounding brush. The insulation failure can occur anywhere, so the impedances Z_{F1} and Z_{F2} are unknown. The fault impedance R_G is also unknown. The purpose of the field ground detector is to measure this resistance.

Measurement of R_G is accomplished by injecting a voltage, V_{INJ} and measuring the resulting current, I_G. The measurement algorithm must be capable of discriminating between capacitive current due to C_F (which can be significant) and resistive current due to a fault. The exciter voltage, V_{FLD} is a DC value with a small ripple such that the impedance of the field is essentially resistive. The current I_{FLD} is a DC current with a range of tens, hundreds, or thousands of amps.

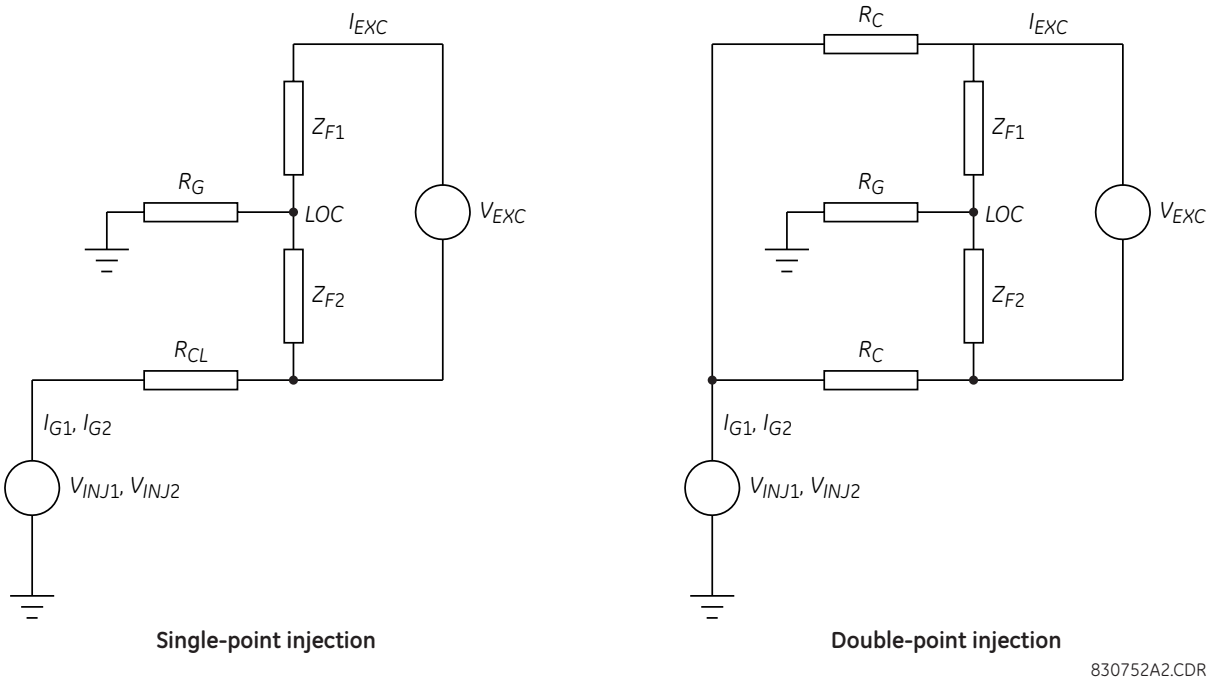

Figure 5–136: EQUIVALENT CIRCUIT, SINGLE-POINT AND DOUBLE-POINT INJECTION

Referring to the single-point injection circuit, the magnitude of I_{FLD} makes it evident that V_{INJ} cannot have a significant impact on the voltage drop across Z_{F2}. Therefore if two values (V_{INJ1} and V_{INJ2}) are injected the following equations can be written:

$$V_{INJ1} = I_{G1}R_G + I_{G1}R_{CL} + V_{F2}$$
$$V_{INJ2} = I_{G2}R_G + I_{G2}R_{CL} + V_{F2} \quad \textbf{(EQ 5.44)}$$

Where I_{G1} is the current flowing due to V_{INJ1} and I_{G2} is the current flowing due to V_{INJ2}. Solving for R_G we get:

$$R_G = \frac{(V_{INJ1} - V_{INJ2}) - (I_{G1} - I_{G2}) \times R_{CL}}{I_{G1} - I_{G2}} \quad \textbf{(EQ 5.45)}$$

For the double-point injection circuit, R_{CL} is defined as:

$$R_{CL} = \frac{R_C}{2} \quad \textbf{(EQ 5.46)}$$

The V_{INJ} voltage is composed of a square wave to create two levels of injection (V_{INJ1} and V_{INJ2}). Once the value of R_G is known it can be substituted into the V_{INJ} equation above to determine V_{F2}. If the V_{FLD} voltage (refer to the single-point injection circuit) is known through measurement then the location of the fault is simply V_{F2} / V_{FLD}. This gives the location of the fault as percentage of field winding from negative terminal in case of single point injection. If double point injection is used, fault location cannot be determined. The relay displays an invalid fault location for approximately 10% for such conditions. The fault location cannot be determined if the field voltage is zero (that is, when the generator is not running). The fault location is displayed only when the measured field ground resistance is less than 500 KΩ. See the GPM Field and Stator Ground Fault Protection Modules Instruction Manual for details of wiring and installation.

GROUND UNDERCURRENT:

A brush lift-off condition will prevent the field ground detector from operating. This is detected by calculating the RMS value of the ground current. It will normally have a nonzero value due to the capacitance of the field winding. A drop in this signal indicates an open circuit in the injection path and the field ground under current feature detects this condition.

FIELD CURRENT MONITORING:

The G60 can monitor the field current via a Hall effect transducer that produces a 4 to 20 mA output. This device must be wired to a DCmA input of the G60 or a Brick in HardFiber system. Note that the relay must be configured with a transducer input card for the former case. Assignment of this signal to the field ground function allows the user to detect a field over-current or undercurrent condition. The maximum and minimum settings configured for scaling of this DCmA input shall be used to get the per-unit values of field current.

b) FIELD GROUND

PATH: SETTINGS ⇨⇩ GROUPED ELEMENTS ⇨ SETTING GROUP 1(6) ⇨ FIELD GROUND PROTECTION ⇨⇩ FIELD GROUND

■ FIELD ■ GROUND	◀▶	FIELD GROUND FUNCTION: Disabled	*Range: Disabled, Enabled*
MESSAGE	▲▼	FIELD GROUND INJECTION FREQUENCY: 1.0 Hz	*Range: 0.1 to 3.0 Hz in steps of 0.1*
MESSAGE	▲▼	INJ CONNECTION TYPE: Single Point	*Range: Single Point, Double Point*
MESSAGE	▲▼	FIELD GROUND STG1 PICKUP: 20 kΩ	*Range: 1 to 500 kΩ in steps of 1*
MESSAGE	▲▼	FIELD GROUND STG1 DELAY: 10.0 s	*Range: 0.1 to 600.0 s in steps of 0.1*
MESSAGE	▲▼	FIELD GROUND STG2 PICKUP: 5 kΩ	*Range: 1 to 500 kΩ in steps of 1*
MESSAGE	▲▼	FIELD GROUND STG2 DELAY: 3.0 s	*Range: 0.1 to 600.0 s in steps of 0.1*
MESSAGE	▲▼	FIELD GROUND UC PICKUP: 1.00 mA	*Range: 0.05 to 100.00 mA in steps of 0.1*
MESSAGE	▲▼	FIELD GROUND UC DELAY: 1.0 s	*Range: 0.10 to 600.00 s in steps of 0.1*
MESSAGE	▲▼	FIELD GROUND BLK: Off	*Range: FlexLogic operand*
MESSAGE	▲▼	FIELD GROUND TARGET: Self-reset	*Range: Self-reset, Latched, Disabled*
MESSAGE	▲	FIELD GROUND EVENTS: Disabled	*Range: Disabled, Enabled*

The following settings are available for the field ground fault detector function.

- **FIELD GROUND INJECTION FREQUENCY**: This setting specifies the frequency of the signal to be injected into the field winding for detecting ground faults. The injection frequency selection will depend on the value of field winding capacitance to ground. The following simple formula can be used to set the injection frequency when the field winding capacitance is known in µF.

$$F_{inj} = \frac{2.5}{C_F} \quad \textbf{(EQ 5.47)}$$

Where C_F is in microfarads. Some example injection frequency settings are given in the table below for various field winding capacitance values. For field winding capacitances greater than 10 µF, resistance measurements will be less accurate.

Table 5–35: EXAMPLE INJECTION FREQUENCY SETTINGS

C_F	F_{INJ}
1 µF	2.50 Hz
2 µF	1.50 Hz
3 µF	0.83 Hz
4 µF	0.63 Hz
5 µF	0.50 Hz
6 µF	0.42 Hz
7 µF	0.36 Hz
8 µF	0.31 Hz
9 µF	0.28 Hz
10 µF	0.25 Hz

- **INJ CONNECTION TYPE**: Field ground protection can be implemented by injecting a low frequency signal either into both positive and negative terminals of the field winding or only into the negative terminal of the field winding. See the GPM Field and Stator Ground Fault Protection Modules Instruction Manual for wiring difference between single point and double point injections. For single point injection, the G60 provides the feature of fault location. In case of a field ground fault, the G60 displays the location of the fault in the field winding as a percentage of the winding from the negative terminal. If the preference is to keep the injection symmetrical into the field winding, then double point injection has to be done but the fault location feature is not available. This setting has to match the type of connection on the field ground module.
- **FIELD GROUND STG1 PICKUP**: If the measured ground resistance is less than the value specified by this setting, then the stage 1 element will pickup. Normally stage 1 is used to raise alarms and typical settings may fall in the range of 10 to 40 kΩ.
- **FIELD GROUND STG1 DELAY**: This setting specifies a time delay for stage 1. Typical settings are in the range of 10 to 15 seconds. This delay will have to be added to the operating time of the element to obtain the overall delay.
- **FIELD GROUND STG2 PICKUP**: If the measured ground resistance is less than the value specified by this setting, then the stage 2 element will pickup. Normally stage 2 is used to raise trip signals and typical settings may fall in the range of 2 to 5 kΩ.
- **FIELD GROUND STG2 DELAY**: This setting specifies a time delay for stage 2. Typical settings are in the range of 3 to 5 seconds. This delay will have to be added to the operating time of the element to obtain the overall delay.
- **FIELD GROUND UC PICKUP**: This setting specifies the ground undercurrent level below which a brush open condition shall be detected. A brush lift-off condition will prevent the field ground detector from operating. This is detected by calculating the RMS value of the ground current. It will normally have a non-zero value due to the capacitance of the field winding. A drop in this signal indicates an open circuit in the injection path. To set this value, the ground current in a healthy operating condition preferably with zero field voltage should be recorded from G60 actual values display (performed during commissioning). Configure this setting to be 60 to 70% of that normal value.
- **FIELD GROUND UC DELAY**: This setting specifies a time delay for field ground undercurrent element. Typical settings are in the range of 20 to 30 seconds. This delay will have to be added to the operating time of the element to obtain the overall delay.
- **FIELD GROUND FUNCTION BLK**: This setting selects a FlexLogic operand to block the field ground function.

The field ground fault detector function logic is shown below.

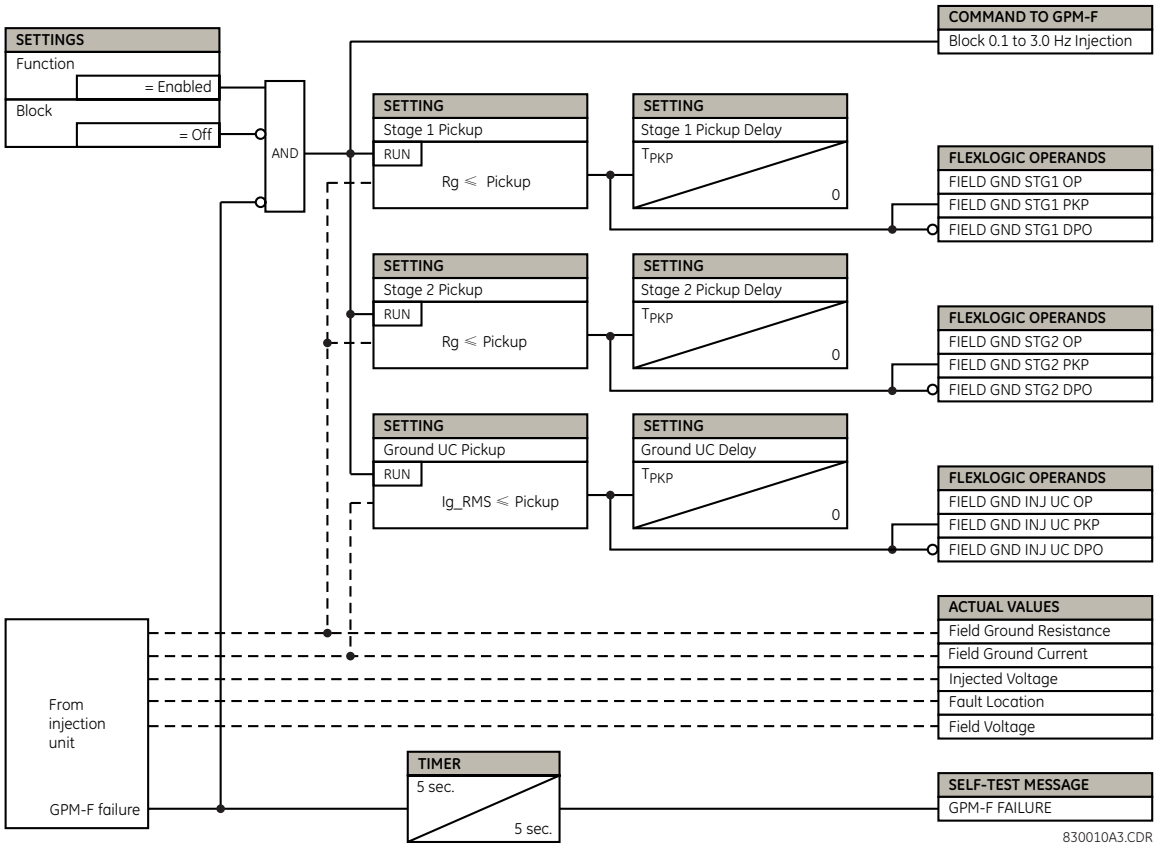

Figure 5–137: FIELD GROUND FAULT DETECTOR FUNCTION LOGIC

c) FIELD CURRENT

PATH: SETTINGS ⇨⇩ GROUPED ELEMENTS ⇨ SETTING GROUP 1(6) ⇨ FIELD GROUND PROTECTION ⇨⇩ FIELD CURRENT

■ FIELD ■ CURRENT		FIELD CURRENT FUNCTION: Disabled	*Range: Disabled, Enabled*
	MESSAGE	FIELD CURRENT ORIGIN: None	*Range: None, dcmA 1, dcmA 2,..., dcmA 24, RTD1, RTD2,..., RTD8*
	MESSAGE	FIELD OVER CURRENT PICKUP: 0.80 pu	*Range: 0.05 to 1.00 pu in steps of 0.01*
	MESSAGE	FIELD OVER CURRENT DELAY: 1.00 s	*Range: 0.00 to 600.00 s in steps of 0.01*
	MESSAGE	FIELD UNDER CURRENT PICKUP: 0.20 pu	*Range: 0.05 to 1.00 pu in steps of 0.01*
	MESSAGE	FIELD UNDER CURRENT DELAY: 1.00 s	*Range: 0.00 to 600.00 s in steps of 0.01*
	MESSAGE	FIELD CURRENT BLK: Off	*Range: FlexLogic operand*
	MESSAGE	FIELD CURRENT TARGET: Self-reset	*Range: Self-reset, Latched, Disabled*
	MESSAGE	FIELD CURRENT EVENTS: Disabled	*Range: Disabled, Enabled*

The following settings are available for the field current fault detector function.

- **FIELD CURRENT ORIGIN**: This setting selects the DCmA input to be used for the field current protection element. A DCmA input can be selected from up to 24 possible inputs, depending on the number of installed transducer modules. In a HardFiber G60 device, this setting can point to one of the Resistance Temperature Detector (RTD) inputs mapped to a Brick DCmA input. In both cases, the minimum and maximum scaling settings of that transducer input are used to perform the per-unit conversion. The unit setting shall be configured as “Amps” if the transducer input is used.

  These minimum and maximum settings are set as per the Hall sensor current rating. The per-unit computation is scaled to a base equal to the maximum value setting, with a zero per-unit value corresponding to zero in the unit system used by the maximum value setting. For example, in the case where the maximum value setting is 100 A, a trip level of 75 A is achieved by setting the operate level at 0.75 pu, regardless of the range (for example, 4 to 20 mA, 0 to 20 mA etc.) and regardless of the minimum value setting.
- **FIELD OVER CURRENT PICKUP**: This setting specifies the field current level above which the overcurrent element picks up.
- **FIELD OVER CURRENT DELAY**: This setting specifies a time delay for the overcurrent element. This delay is added to the operating time of the element to obtain the overall delay.
- **FIELD UNDER CURRENT PICKUP**: This setting specifies the field current level above which the undercurrent element picks up.
- **FIELD UNDER CURRENT DELAY**: This setting specifies a time delay for undercurrent element. This delay is added to the operating time of the element to obtain the overall delay.
- **FIELD CURRENT BLK**: This setting allows the user to select a FlexLogic operand to block the field ground function.

The field current fault detector function logic is shown below.

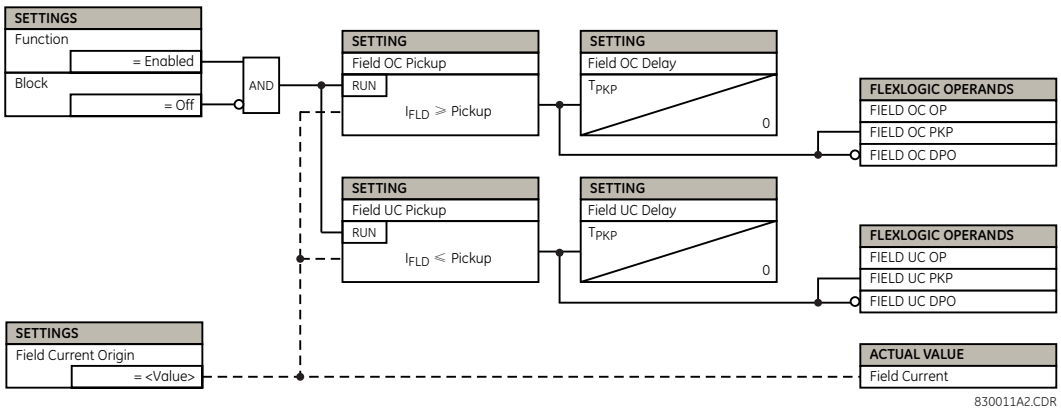

Figure 5–138: FIELD CURRENT FAULT DETECTOR FUNCTION LOGIC

5.7.1 OVERVIEW

Control elements are generally used for control rather than protection. See the Introduction to Elements section at the beginning of this chapter for further information.

5.7.2 TRIP BUS

PATH: SETTINGS ⇨⇩ CONTROL ELEMENTS ⇨ TRIP BUS ⇨ TRIP BUS 1(6)

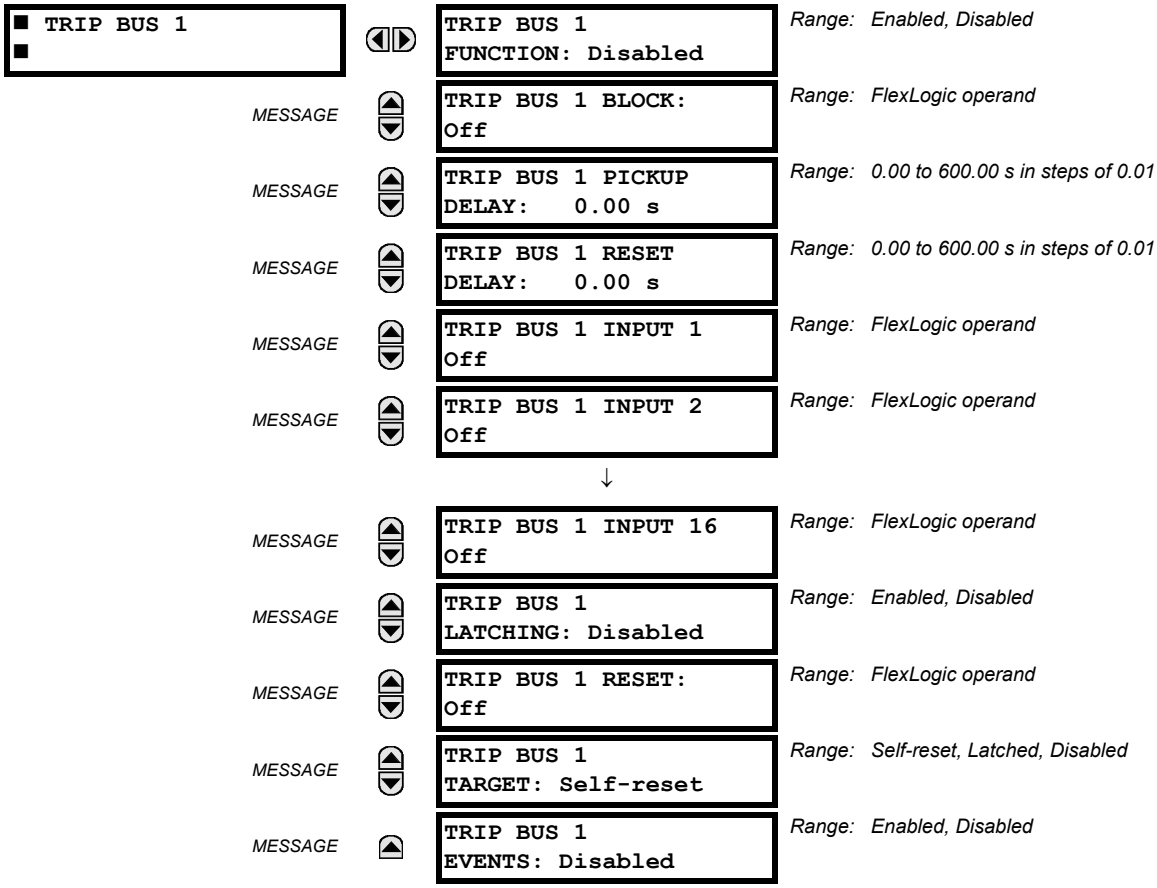

The trip bus element allows aggregating outputs of protection and control elements without using FlexLogic and assigning them a simple and effective manner. Each trip bus can be assigned for either trip or alarm actions. Simple trip conditioning such as latch, delay, and seal-in delay are available.

The easiest way to assign element outputs to a trip bus is through the EnerVista UR Setup software A protection summary is displayed by navigating to a specific protection or control protection element and checking the desired bus box. Once the desired element is selected for a specific bus, a list of element operate-type operands are displayed and can be assigned to a trip bus. If more than one operate-type operand is required, it may be assigned directly from the trip bus menu.

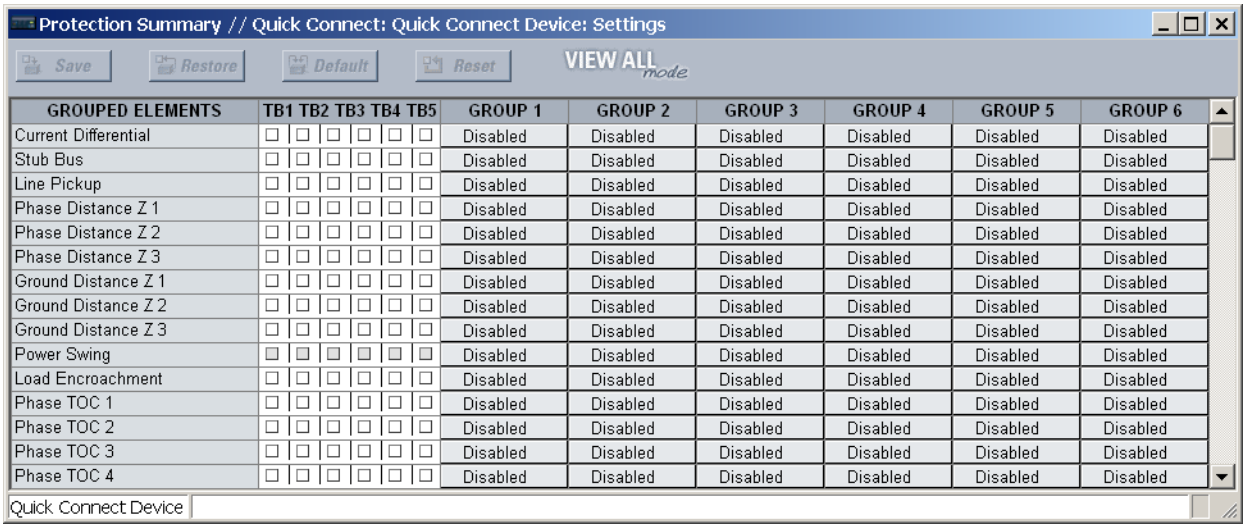

GROUPED ELEMENTS	TB1	TB2	TB3	TB4	TB5	GROUP 1	GROUP 2	GROUP 3	GROUP 4	GROUP 5	GROUP 6
Current Differential	☐	☐	☐	☐	☐	Disabled	Disabled	Disabled	Disabled	Disabled	Disabled
Stub Bus	☐	☐	☐	☐	☐	Disabled	Disabled	Disabled	Disabled	Disabled	Disabled
Line Pickup	☐	☐	☐	☐	☐	Disabled	Disabled	Disabled	Disabled	Disabled	Disabled
Phase Distance Z 1	☐	☐	☐	☐	☐	Disabled	Disabled	Disabled	Disabled	Disabled	Disabled
Phase Distance Z 2	☐	☐	☐	☐	☐	Disabled	Disabled	Disabled	Disabled	Disabled	Disabled
Phase Distance Z 3	☐	☐	☐	☐	☐	Disabled	Disabled	Disabled	Disabled	Disabled	Disabled
Ground Distance Z 1	☐	☐	☐	☐	☐	Disabled	Disabled	Disabled	Disabled	Disabled	Disabled
Ground Distance Z 2	☐	☐	☐	☐	☐	Disabled	Disabled	Disabled	Disabled	Disabled	Disabled
Ground Distance Z 3	☐	☐	☐	☐	☐	Disabled	Disabled	Disabled	Disabled	Disabled	Disabled
Power Swing	☐	☐	☐	☐	☐	Disabled	Disabled	Disabled	Disabled	Disabled	Disabled
Load Encroachment	☐	☐	☐	☐	☐	Disabled	Disabled	Disabled	Disabled	Disabled	Disabled
Phase TOC 1	☐	☐	☐	☐	☐	Disabled	Disabled	Disabled	Disabled	Disabled	Disabled
Phase TOC 2	☐	☐	☐	☐	☐	Disabled	Disabled	Disabled	Disabled	Disabled	Disabled
Phase TOC 3	☐	☐	☐	☐	☐	Disabled	Disabled	Disabled	Disabled	Disabled	Disabled
Phase TOC 4	☐	☐	☐	☐	☐	Disabled	Disabled	Disabled	Disabled	Disabled	Disabled

Figure 5–139: TRIP BUS FIELDS IN THE PROTECTION SUMMARY

The following settings are available.

- **TRIP BUS 1 BLOCK**: The trip bus output is blocked when the operand assigned to this setting is asserted.
- **TRIP BUS 1 PICKUP DELAY**: This setting specifies a time delay to produce an output depending on how output is used.
- **TRIP BUS 1 RESET DELAY**: This setting specifies a time delay to reset an output command. The time delay should be set long enough to allow the breaker or contactor to perform a required action.
- **TRIP BUS 1 INPUT 1** to **TRIP BUS 1 INPUT 16**: These settings select a FlexLogic operand to be assigned as an input to the trip bus.
- **TRIP BUS 1 LATCHING**: This setting enables or disables latching of the trip bus output. This is typically used when lockout is required or user acknowledgement of the relay response is required.
- **TRIP BUS 1 RESET**: The trip bus output is reset when the operand assigned to this setting is asserted. Note that the RESET OP operand is pre-wired to the reset gate of the latch, As such, a reset command the front panel interface or via communications will reset the trip bus output.

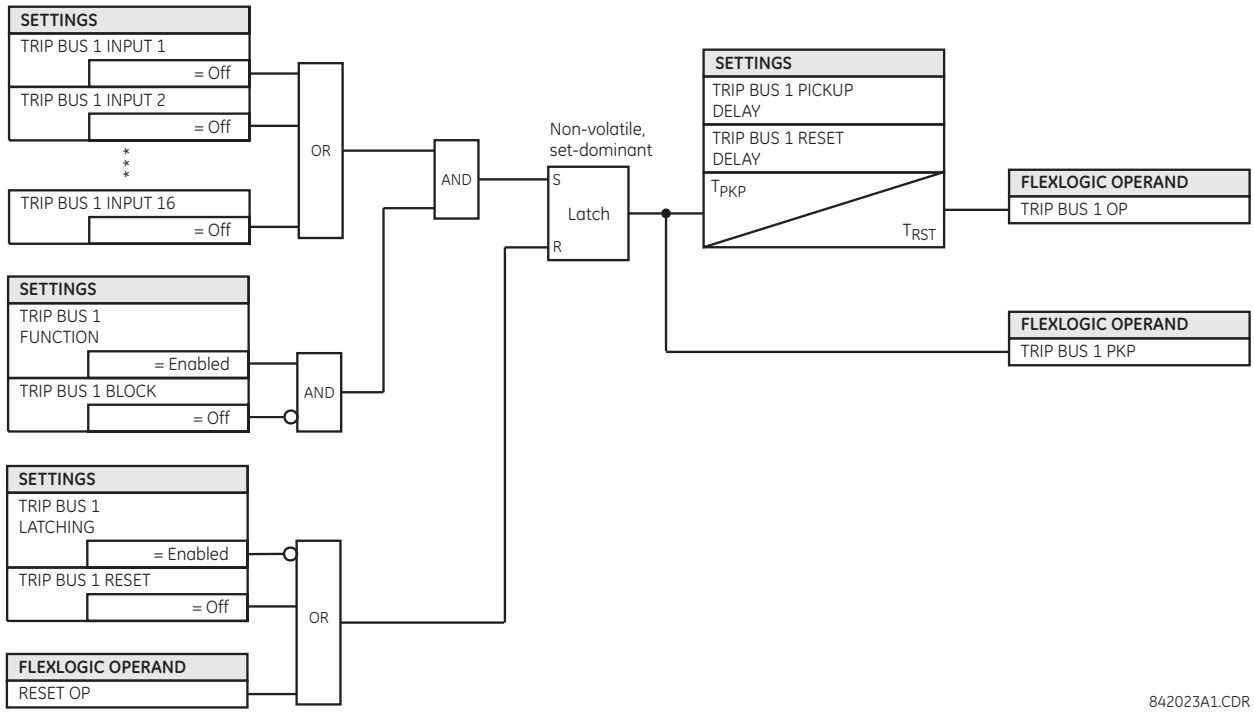

Figure 5–140: TRIP BUS LOGIC

5.7.3 SETTING GROUPS

PATH: SETTINGS ⇨⇩ CONTROL ELEMENTS ⇨ SETTINGS GROUPS

■ SETTING GROUPS ■		SETTING GROUPS FUNCTION: Enabled	*Range: Disabled, Enabled*
	MESSAGE	SETTING GROUPS BLK: Off	*Range: FlexLogic operand*
	MESSAGE	GROUP 2 ACTIVATE ON: Off	*Range: FlexLogic operand*
	MESSAGE	GROUP 3 ACTIVATE ON: Off	*Range: FlexLogic operand*
		↓	
	MESSAGE	GROUP 6 ACTIVATE ON: Off	*Range: FlexLogic operand*
	MESSAGE	GROUP 1 NAME:	*Range: up to 16 alphanumeric characters*
	MESSAGE	GROUP 2 NAME:	*Range: up to 16 alphanumeric characters*
		↓	
	MESSAGE	GROUP 6 NAME:	*Range: up to 16 alphanumeric characters*
	MESSAGE	SETTING GROUP EVENTS: Disabled	*Range: Disabled, Enabled*

The 61850 standard provides for the ability to monitor, edit, and change setting groups in a relay through a series of services operating on Setting Group Control Block values. There is one SGCB in LLN0 in LD1 in the UR as, at present, the other LDs do not support multiple setting groups The default value of **SETTING GROUPS** is Disabled. In order for 61850 and/or UR setting group control to function, the **SETTING GROUPS FUNCTION** must be set to Enabled.

On a setting group change, protection elements are blocked temporarily to allow the relay to re-initialize with the new settings. The duration of the block depends on relay configuration and can last up to four cycles. The actual block duration on the group switching can be verified by the PROTSUPV operand.

The active setting group in the UR is settable from either the value set via a FlexLogic operand in the UR (present practice) or a SelectActiveSG command from a 61850 Client. For both the UR and IEC 61850, the default active setting group is "1".

A 61850 SelectActiveSG command sets one of the internal Non-Volatile flags (61850 SG Level x) that represents the requested Active Setting Group shown as follows:

Table 5–36: ACTIVE SETTING GROUP

SELECTACTIVESG VALUE	FLAG SET
1 (default)	SG Level 1
2	SG Level 2
3	SG Level 3
4	SG Level 4
5	SG Level 4
6	SG Level 6

On power-up or restart, the previously selected 61850 SG Level x is re-instated. Similarly, the input to the setting group control in the UR can be designed with Non-Volatile latches to achieve the same effect.

The setting groups menu controls the activation and deactivation of up to six possible groups of settings in the **GROUPED ELEMENTS** settings menu. The faceplate Settings In Use LEDs indicate which active group (with a non-flashing energized LED) is in service.

The **SETTING GROUPS BLK** setting prevents the active setting group from changing when the FlexLogic parameter is set to "On". This can be useful in applications where it is undesirable to change the settings under certain conditions, such as the breaker being open.

The **GROUP 2 ACTIVATE ON** to **GROUP 6 ACTIVATE ON** settings select a FlexLogic operand which, when set, makes the particular setting group active for use by any grouped element. A priority scheme ensures that only one group is active at a given time – the highest-numbered group that is activated by its **ACTIVATE ON** parameter takes priority over the lower-numbered groups. There is no activate on setting for group 1 (the default active group), because group 1 automatically becomes active if no other group is active.

The **SETTING GROUP 1 NAME** to **SETTING GROUP 6 NAME** settings allows the user to assign a name to each of the six settings groups. Once programmed, this name appears on the second line of the **GROUPED ELEMENTS ⇨ SETTING GROUP 1(6)** menu display.

The relay can be set up via a FlexLogic equation to receive requests to activate or de-activate a particular non-default settings group. The following FlexLogic equation (see the following figure) illustrates requests via remote communications (for example, VIRTUAL INPUT 1 ON) or from a local contact input (for example, CONTACT IP 1 ON) to initiate the use of a particular settings group, and requests from several overcurrent pickup measuring elements to inhibit the use of the particular settings group. The assigned VIRTUAL OUTPUT 1 operand is used to control the “On” state of a particular settings group.

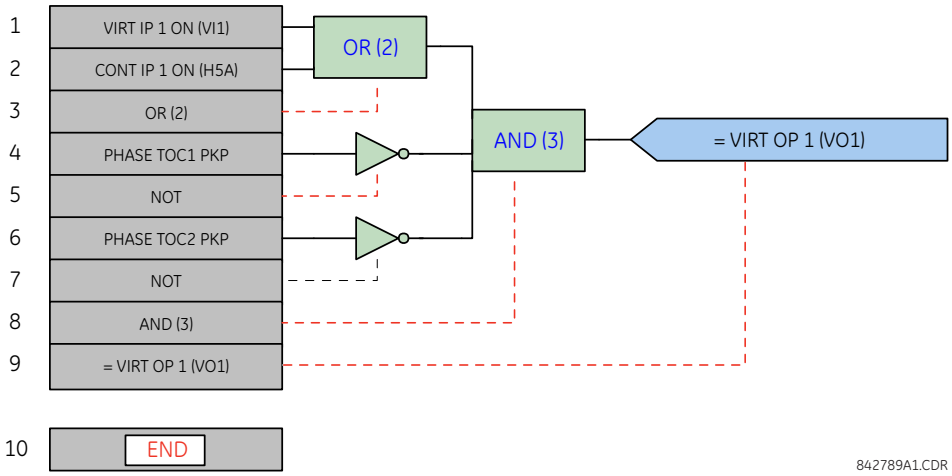

Figure 5–141: EXAMPLE FLEXLOGIC CONTROL OF A SETTINGS GROUP

PATH: SETTINGS ⇨⇩ CONTROL ELEMENTS ⇨⇩ SELECTOR SWITCH ⇨ SELECTOR SWITCH 1(2)

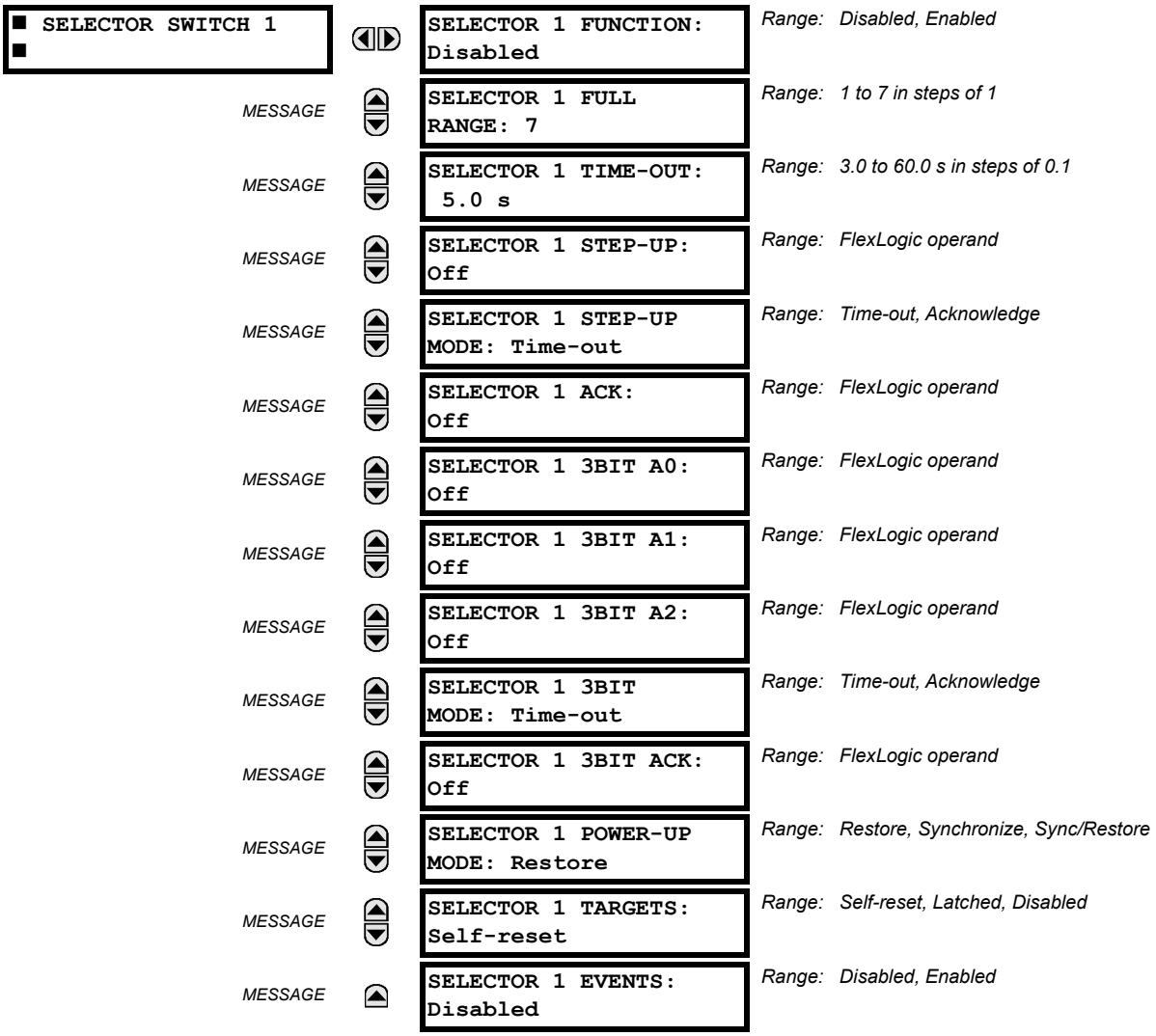

The selector switch element is intended to replace a mechanical selector switch. Typical applications include setting group control or control of multiple logic sub-circuits in user-programmable logic.

The element provides for two control inputs. The step-up control allows stepping through selector position one step at a time with each pulse of the control input, such as a user-programmable pushbutton. The three-bit control input allows setting the selector to the position defined by a three-bit word.

The element allows pre-selecting a new position without applying it. The pre-selected position gets applied either after time-out or upon acknowledgement via separate inputs (user setting). The selector position is stored in non-volatile memory. Upon power-up, either the previous position is restored or the relay synchronizes to the current three-bit word (user setting). Basic alarm functionality alerts the user under abnormal conditions; for example, the three-bit control input being out of range.

A selector switch runs every two power cycles.

- **SELECTOR 1 FULL RANGE**: This setting defines the upper position of the selector. When stepping up through available positions of the selector, the upper position wraps up to the lower position (position 1). When using a direct three-bit control word for programming the selector to a desired position, the change would take place only if the control word is within the range of 1 to the **SELECTOR FULL RANGE**. If the control word is outside the range, an alarm is established by setting the SELECTOR ALARM FlexLogic operand for three seconds.

- **SELECTOR 1 TIME-OUT:** This setting defines the time-out period for the selector. This value is used by the relay in the following two ways. When the **SELECTOR STEP-UP MODE** is "Time-out", the setting specifies the required period of inactivity of the control input after which the pre-selected position is automatically applied. When the **SELECTOR STEP-UP MODE** is "Acknowledge", the setting specifies the period of time for the acknowledging input to appear. The timer is re-started by any activity of the control input. The acknowledging input must come before the **SELECTOR 1 TIME-OUT** timer expires; otherwise, the change will not take place and an alarm will be set.
- **SELECTOR 1 STEP-UP**: This setting specifies a control input for the selector switch. The switch is shifted to a new position at each rising edge of this signal. The position changes incrementally, wrapping up from the last (**SELECTOR 1 FULL RANGE**) to the first (position 1). Consecutive pulses of this control operand must not occur faster than every 50 ms. After each rising edge of the assigned operand, the time-out timer is restarted and the **SELECTOR SWITCH 1: POS Z CHNG INITIATED** target message is displayed, where ***Z*** the pre-selected position. The message is displayed for the time specified by the **FLASH MESSAGE TIME** setting. The pre-selected position is applied after the selector times out ("Time-out" mode), or when the acknowledging signal appears before the element times out ("Acknowledge" mode). When the new position is applied, the relay displays the **SELECTOR SWITCH 1: POSITION Z IN USE** message. Typically, a user-programmable pushbutton is configured as the stepping up control input.
- **SELECTOR 1 STEP-UP MODE**: This setting defines the selector mode of operation. When set to "Time-out", the selector will change its position after a pre-defined period of inactivity at the control input. The change is automatic and does not require any explicit confirmation of the intent to change the selector's position. When set to "Acknowledge", the selector will change its position only after the intent is confirmed through a separate acknowledging signal. If the acknowledging signal does not appear within a pre-defined period of time, the selector does not accept the change and an alarm is established by setting the SELECTOR STP ALARM output FlexLogic operand for three seconds.
- **SELECTOR 1 ACK**: This setting specifies an acknowledging input for the stepping up control input. The pre-selected position is applied on the rising edge of the assigned operand. This setting is active only under "Acknowledge" mode of operation. The acknowledging signal must appear within the time defined by the **SELECTOR 1 TIME-OUT** setting after the last activity of the control input. A user-programmable pushbutton is typically configured as the acknowledging input.
- **SELECTOR 1 3BIT A0, A1, and A2**: These settings specify a three-bit control input of the selector. The three-bit control word pre-selects the position using the following encoding convention:

A2	A1	A0	POSITION
0	0	0	rest
0	0	1	1
0	1	0	2
0	1	1	3
1	0	0	4
1	0	1	5
1	1	0	6
1	1	1	7

The "rest" position (0, 0, 0) does not generate an action and is intended for situations when the device generating the three-bit control word is having a problem. When **SELECTOR 1 3BIT MODE** is "Time-out", the pre-selected position is applied in **SELECTOR 1 TIME-OUT** seconds after the last activity of the three-bit input. When **SELECTOR 1 3BIT MODE** is "Acknowledge", the pre-selected position is applied on the rising edge of the **SELECTOR 1 3BIT ACK** acknowledging input.

The stepping up control input (**SELECTOR 1 STEP-UP**) and the three-bit control inputs (**SELECTOR 1 3BIT A0** through **A2**) lock-out mutually: once the stepping up sequence is initiated, the three-bit control input is inactive; once the three-bit control sequence is initiated, the stepping up input is inactive.

- **SELECTOR 1 3BIT MODE**: This setting defines the selector mode of operation. When set to "Time-out", the selector changes its position after a pre-defined period of inactivity at the control input. The change is automatic and does not require explicit confirmation to change the selector position. When set to "Acknowledge", the selector changes its position only after confirmation via a separate acknowledging signal. If the acknowledging signal does not appear within a pre-defined period of time, the selector rejects the change and an alarm established by invoking the SELECTOR BIT ALARM FlexLogic operand for three seconds.
- **SELECTOR 1 3BIT ACK**: This setting specifies an acknowledging input for the three-bit control input. The pre-selected position is applied on the rising edge of the assigned FlexLogic operand. This setting is active only under the

"Acknowledge" mode of operation. The acknowledging signal must appear within the time defined by the **SELECTOR TIME-OUT** setting after the last activity of the three-bit control inputs. Note that the stepping up control input and three-bit control input have independent acknowledging signals (**SELECTOR 1 ACK** and **SELECTOR 1 3BIT ACK**, accordingly).

- **SELECTOR 1 POWER-UP MODE**: This setting specifies the element behavior on power up of the relay.

  When set to "Restore", the last position of the selector (stored in the non-volatile memory) is restored after powering up the relay. If the position restored from memory is out of range, position 0 (no output operand selected) is applied and an alarm is set (SELECTOR 1 PWR ALARM).

  When set to "Synchronize" selector switch acts as follows. For two power cycles, the selector applies position 0 to the switch and activates SELECTOR 1 PWR ALARM. After two power cycles expire, the selector synchronizes to the position dictated by the three-bit control input. This operation does not wait for time-out or the acknowledging input. When the synchronization attempt is unsuccessful (that is, the three-bit input is not available (0,0,0) or out of range) then the selector switch output is set to position 0 (no output operand selected) and an alarm is established (SELECTOR 1 PWR ALARM).

  The operation of "Synch/Restore" mode is similar to the "Synchronize" mode. The only difference is that after an unsuccessful synchronization attempt, the switch will attempt to restore the position stored in the relay memory. The "Synch/Restore" mode is useful for applications where the selector switch is employed to change the setting group in redundant (two relay) protection schemes.

- **SELECTOR 1 EVENTS**: If enabled, the following events are logged:

EVENT NAME	DESCRIPTION
SELECTOR 1 POS *Z*	Selector 1 changed its position to *Z*.
SELECTOR 1 STP ALARM	The selector position pre-selected via the stepping up control input has not been confirmed before the time out.
SELECTOR 1 BIT ALARM	The selector position pre-selected via the three-bit control input has not been confirmed before the time out.

The following figures illustrate the operation of the selector switch. In these diagrams, “T” represents a time-out setting.

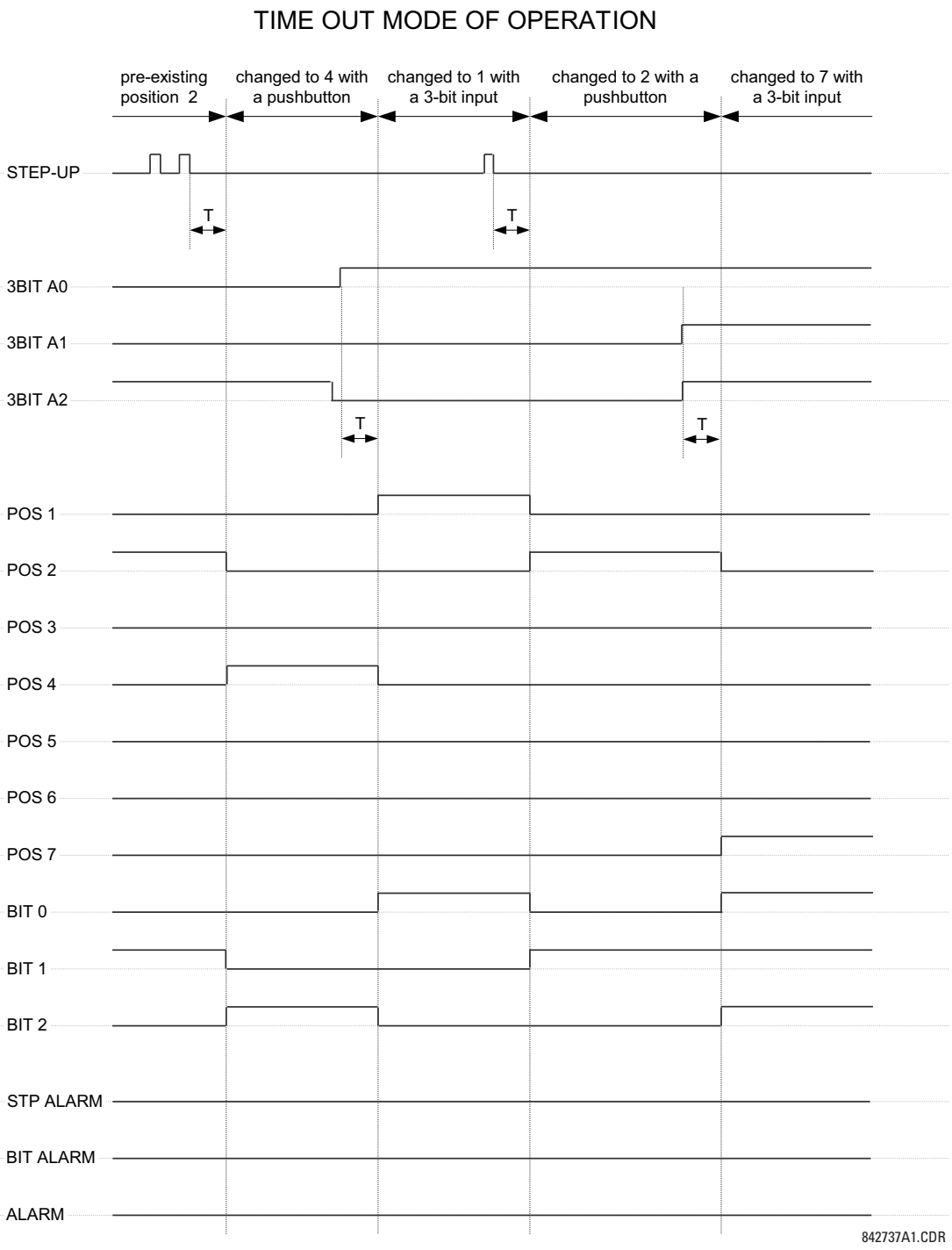

Figure 5–142: TIME-OUT MODE

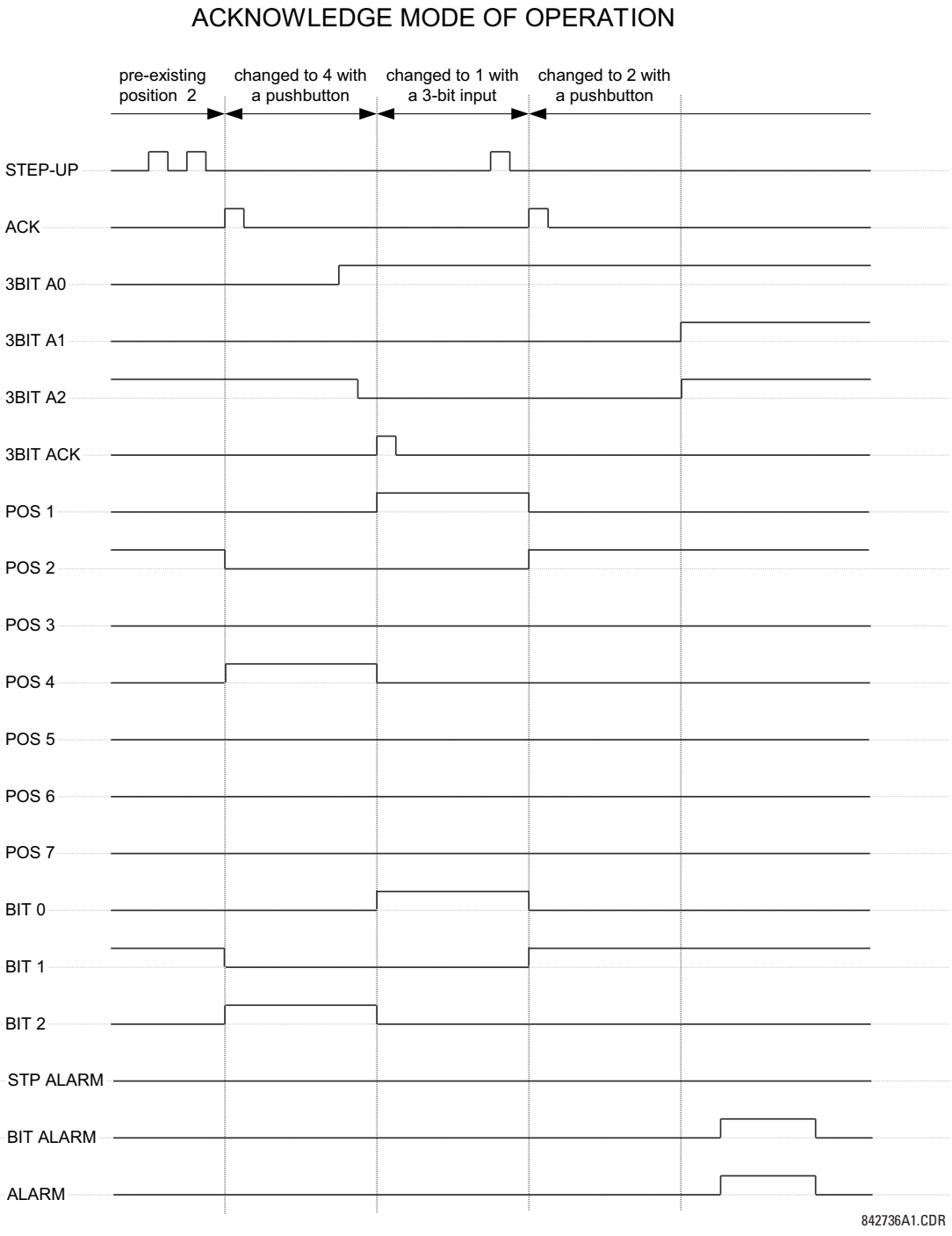

Figure 5–143: ACKNOWLEDGE MODE

APPLICATION EXAMPLE

Consider an application where the selector switch is used to control setting groups 1 through 4 in the relay. The setting groups are to be controlled from both user-programmable pushbutton 1 and from an external device via contact inputs 1 through 3. The active setting group shall be available as an encoded three-bit word to the external device and SCADA via output contacts 1 through 3. The pre-selected setting group shall be applied automatically after 5 seconds of inactivity of the control inputs. When the relay powers up, it should synchronize the setting group to the three-bit control input.

Make the following changes to setting group control in the **SETTINGS ⇨⇩ CONTROL ELEMENTS ⇨ SETTING GROUPS** menu:

SETTING GROUPS FUNCTION: "Enabled"
SETTING GROUPS BLK: "Off"
GROUP 2 ACTIVATE ON: "SELECTOR 1 POS 2"
GROUP 3 ACTIVATE ON: "SELECTOR 1 POS 3"
GROUP 4 ACTIVATE ON: "SELECTOR 1 POS 4"
GROUP 5 ACTIVATE ON: "Off"
GROUP 6 ACTIVATE ON: "Off"

Make the following changes to selector switch element in the **SETTINGS ⇨⇩ CONTROL ELEMENTS ⇨⇩ SELECTOR SWITCH ⇨ SELECTOR SWITCH 1** menu to assign control to user programmable pushbutton 1 and contact inputs 1 through 3:

SELECTOR 1 FUNCTION: "Enabled"
SELECTOR 1 FULL-RANGE: "4"
SELECTOR 1 STEP-UP MODE: "Time-out"
SELECTOR 1 TIME-OUT: "5.0 s"
SELECTOR 1 STEP-UP: "PUSHBUTTON 1 ON"
SELECTOR 1 ACK: "Off"
SELECTOR 1 3BIT A0: "CONT IP 1 ON"
SELECTOR 1 3BIT A1: "CONT IP 2 ON"
SELECTOR 1 3BIT A2: "CONT IP 3 ON"
SELECTOR 1 3BIT MODE: "Time-out"
SELECTOR 1 3BIT ACK: "Off"
SELECTOR 1 POWER-UP MODE: "Synchronize"

Now, assign the contact output operation (assume the H6E module) to the selector switch element by making the following changes in the **SETTINGS ⇨⇩ INPUTS/OUTPUTS ⇨⇩ CONTACT OUTPUTS** menu:

OUTPUT H1 OPERATE: "SELECTOR 1 BIT 0"
OUTPUT H2 OPERATE: "SELECTOR 1 BIT 1"
OUTPUT H3 OPERATE: "SELECTOR 1 BIT 2"

Finally, assign configure user-programmable pushbutton 1 by making the following changes in the **SETTINGS ⇨ PRODUCT SETUP ⇨⇩ USER-PROGRAMMABLE PUSHBUTTONS ⇨ USER PUSHBUTTON 1** menu:

PUSHBUTTON 1 FUNCTION: "Self-reset"
PUSHBUTTON 1 DROP-OUT TIME: "0.10 s"

The logic for the selector switch is shown below:

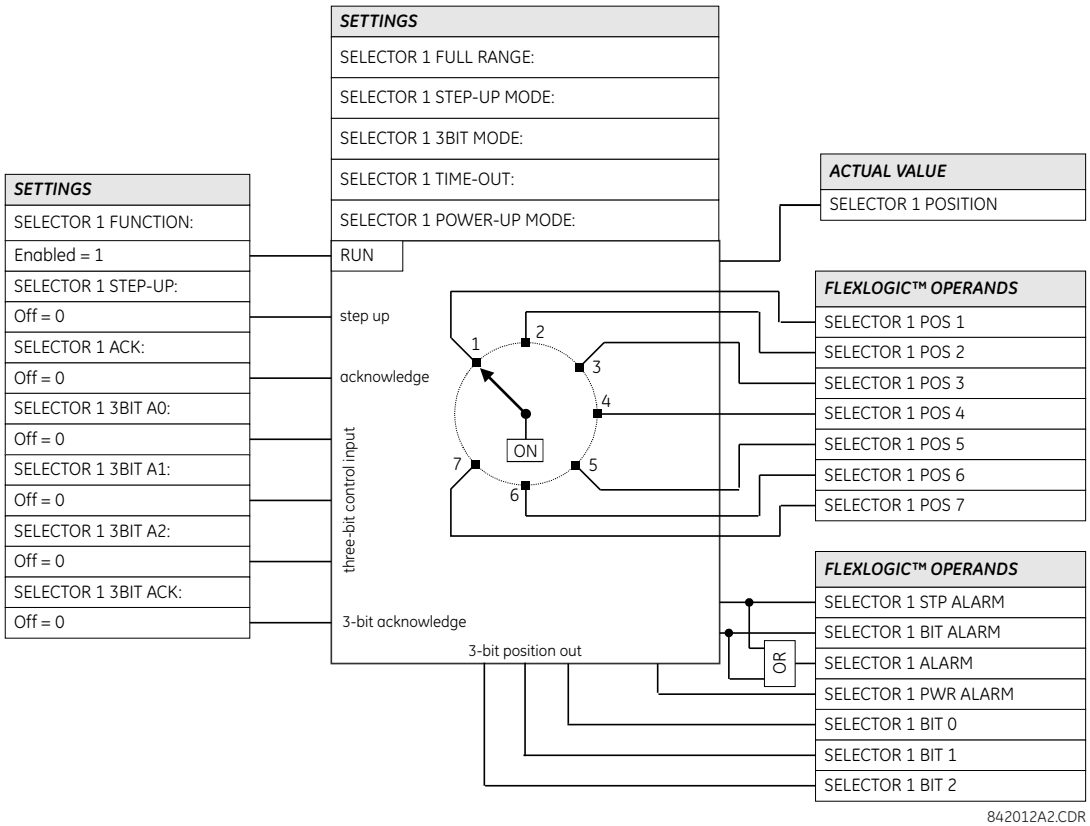

Figure 5–144: SELECTOR SWITCH LOGIC

PATH: SETTINGS ⇨⇩ CONTROL ELEMENTS ⇨⇩ UNDERFREQUENCY ⇨ UNDERFREQUENCY 1(6)

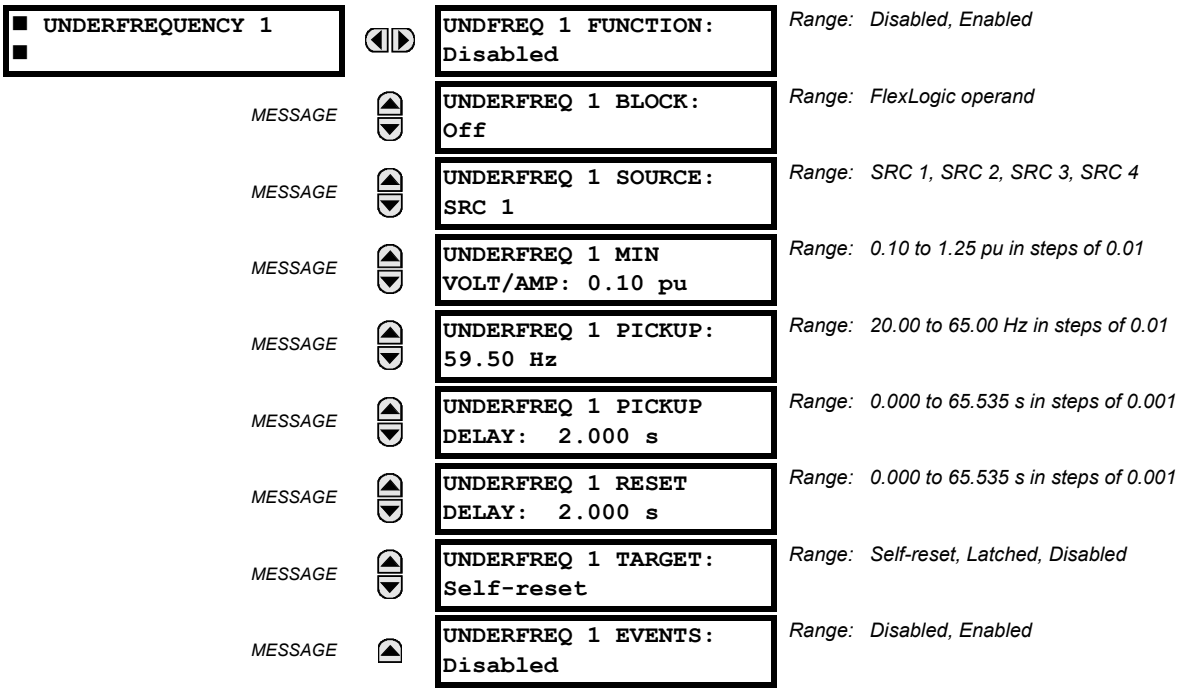

There are six identical underfrequency elements, numbered from 1 through 6.

The steady-state frequency of a power system is a certain indicator of the existing balance between the generated power and the load. Whenever this balance is disrupted through the loss of an important generating unit or the isolation of part of the system from the rest of the system, the effect will be a reduction in frequency. If the control systems of the system generators do not respond fast enough, the system may collapse. A reliable method to quickly restore the balance between load and generation is to automatically disconnect selected loads, based on the actual system frequency. This technique, called “load-shedding”, maintains system integrity and minimize widespread outages. After the frequency returns to normal, the load may be automatically or manually restored.

The **UNDERFREQ 1 SOURCE** setting is used to select the source for the signal to be measured. The element first checks for a live phase voltage available from the selected source. If voltage is not available, the element attempts to use a phase current. If neither voltage nor current is available, the element will not operate, as it will not measure a parameter below the minimum voltage/current setting.

The **UNDERFREQ 1 MIN VOLT/AMP** setting selects the minimum per unit voltage or current level required to allow the underfrequency element to operate. This threshold is used to prevent an incorrect operation because there is no signal to measure.

This **UNDERFREQ 1 PICKUP** setting is used to select the level at which the underfrequency element is to pickup. For example, if the system frequency is 60 Hz and the load shedding is required at 59.5 Hz, the setting will be 59.50 Hz.

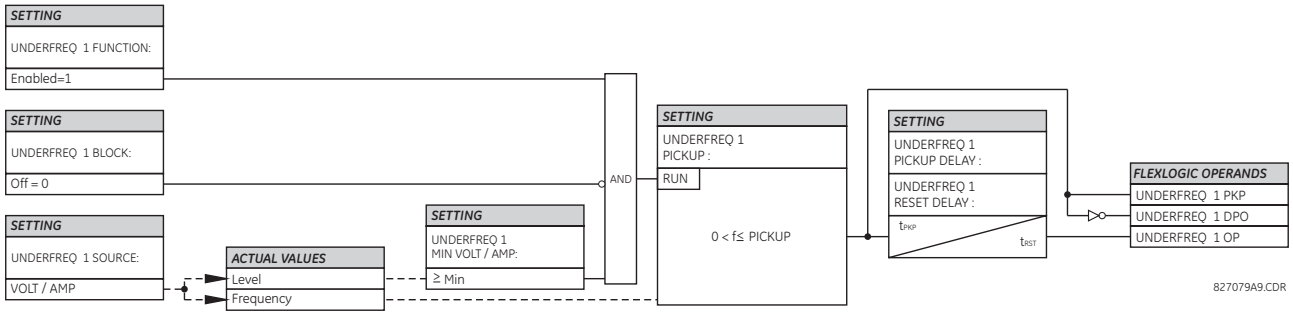

Figure 5–145: UNDERFREQUENCY SCHEME LOGIC

5.7.6 OVERFREQUENCY (ANSI 81O)

PATH: SETTINGS ⇨⇩ CONTROL ELEMENTS ⇨⇩ OVERFREQUENCY ⇨ OVERFREQUENCY 1(4)

■ OVERFREQUENCY 1 ■		OVERFREQ 1 FUNCTION: Disabled	*Range: Disabled, Enabled*
	MESSAGE	OVERFREQ 1 BLOCK: Off	*Range: FlexLogic operand*
	MESSAGE	OVERFREQ 1 SOURCE: SRC 1	*Range: SRC 1, SRC 2, SRC 3, SRC 4*
	MESSAGE	OVERFREQ 1 PICKUP: 60.50 Hz	*Range: 20.00 to 65.00 Hz in steps of 0.01*
	MESSAGE	OVERFREQ 1 PICKUP DELAY: 0.500 s	*Range: 0.000 to 65.535 s in steps of 0.001*
	MESSAGE	OVERFREQ 1 RESET DELAY : 0.500 s	*Range: 0.000 to 65.535 s in steps of 0.001*
	MESSAGE	OVERFREQ 1 TARGET: Self-reset	*Range: Self-reset, Latched, Disabled*
	MESSAGE	OVERFREQ 1 EVENTS: Disabled	*Range: Disabled, Enabled*

There are four overfrequency elements, numbered 1 through 4.

A frequency calculation for a given source is made on the input of a voltage or current channel, depending on which is available. The channels are searched for the signal input in the following order: voltage channel A, auxiliary voltage channel, current channel A, ground current channel. The first available signal is used for frequency calculation.

The steady-state frequency of a power system is an indicator of the existing balance between the generated power and the load. Whenever this balance is disrupted through the disconnection of significant load or the isolation of a part of the system that has a surplus of generation, the effect will be an increase in frequency. If the control systems of the generators do not respond fast enough, to quickly ramp the turbine speed back to normal, the overspeed can lead to the turbine trip. The overfrequency element can be used to control the turbine frequency ramp down at a generating location. This element can also be used for feeder reclosing as part of the "after load shedding restoration".

The **OVERFREQ 1 SOURCE** setting selects the source for the signal to be measured. The **OVERFREQ 1 PICKUP** setting selects the level at which the overfrequency element is to pickup.

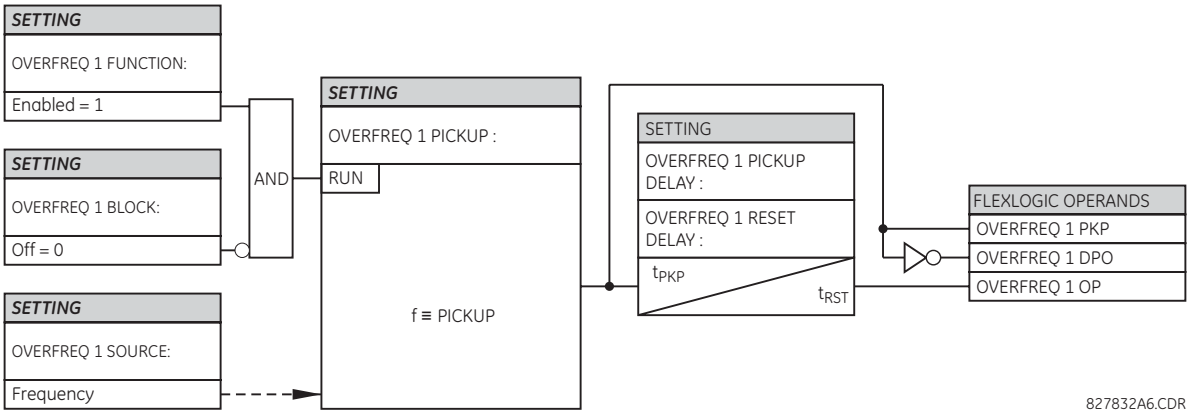

Figure 5–146: OVERFREQUENCY SCHEME LOGIC

5.7.7 FREQUENCY RATE OF CHANGE (ANSI 81R)

PATH: SETTINGS ⇨⇩ CONTROL ELEMENTS ⇨⇩ FREQUENCY RATE OF CHANGE ⇨ FREQUENCY RATE OF CHANGE 1(4)

■ FREQUENCY RATE ■ OF CHANGE 1	FREQ RATE 1 FUNCTION: Disabled	*Range: Disabled, Enabled*
MESSAGE	FREQ RATE 1 SOURCE: SRC 1	*Range: SRC 1, SRC 2, SRC 3, SRC 4*
MESSAGE	FREQ RATE 1 TREND: Increasing	*Range: Increasing, Decreasing, Bi-directional*
MESSAGE	FREQ RATE 1 PICKUP: 0.50 Hz/s	*Range: 0.10 to 15.00 Hz/s in steps of 0.01*
MESSAGE	FREQ RATE 1 OV SUPV PICKUP: 0.700 pu	*Range: 0.100 to 3.000 pu in steps of 0.001*
MESSAGE	FREQ RATE 1 OC SUPV PICKUP: 0.200 pu	*Range: 0.000 to 30.000 pu in steps of 0.001*
MESSAGE	FREQ RATE 1 MIN FREQUENCY: 45.00 Hz	*Range: 20.00 to 80.00 Hz in steps of 0.01*
MESSAGE	FREQ RATE 1 MAX FREQUENCY: 65.00 Hz	*Range: 20.00 to 80.00 Hz in steps of 0.01*
MESSAGE	FREQ RATE 1 PICKUP DELAY: 0.000 s	*Range: 0 to 65.535 s in steps of 0.001*
MESSAGE	FREQ RATE 1 RESET DELAY: 0.000 s	*Range: 0 to 65.535 s in steps of 0.001*
MESSAGE	FREQ RATE 1 BLOCK: Off	*Range: FlexLogic operand*
MESSAGE	FREQ RATE 1 TARGET: Self-reset	*Range: Self-reset, Latched, Disabled*
MESSAGE	FREQ RATE 1 EVENTS: Disabled	*Range: Disabled, Enabled*

Four independent rate of change of frequency elements are available. The element responds to rate of change of frequency with voltage, current and frequency supervision.

- **FREQ RATE 1 TREND:** This setting allows configuring the element to respond to increasing or decreasing frequency, or to frequency change in either direction.
- **FREQ RATE 1 PICKUP:** This setting specifies an intended df/dt pickup threshold. For applications monitoring a decreasing trend, set **FREQ RATE 1 TREND** to "Decreasing" and specify the pickup threshold accordingly. The operating condition is: $-df/dt >$ Pickup .

  For applications monitoring an increasing trend, set **FREQ RATE 1 TREND** to "Increasing" and specify the pickup threshold accordingly. The operating condition is: $df/dt >$ Pickup .

  For applications monitoring rate of change of frequency in any direction set **FREQ RATE 1 TREND** to "Bi-Directional" and specify the pickup threshold accordingly. The operating condition is: $\text{abs}(df/dt) >$ Pickup
- **FREQ RATE 1 OV SUPV PICKUP:** This setting defines minimum voltage level required for operation of the element. The supervising function responds to the positive-sequence voltage. Overvoltage supervision should be used to prevent operation under specific system conditions such as faults.
- **FREQ RATE 1 OC SUPV PICKUP:** This setting defines minimum current level required for operation of the element. The supervising function responds to the positive-sequence current. Typical application includes load shedding. Set the pickup threshold to zero if no overcurrent supervision is required.
- **FREQ RATE 1 MIN FREQUENCY:** This setting defines minimum frequency level required for operation of the element. The setting may be used to effectively block the feature based on frequency. For example, if the intent is to monitor an increasing trend but only if the frequency is already above certain level, this setting should be set to the required frequency level.
- **FREQ RATE 1 MAX FREQUENCY:** This setting defines maximum frequency level required for operation of the element. The setting may be used to effectively block the feature based on frequency. For example, if the intent is to monitor a decreasing trend but only if the frequency is already below certain level (such as for load shedding), this setting should be set to the required frequency level.

NOTE If the signal source assigned to the frequency rate of change element is only set to auxiliary VT, then the minimum voltage supervision is 3 V.

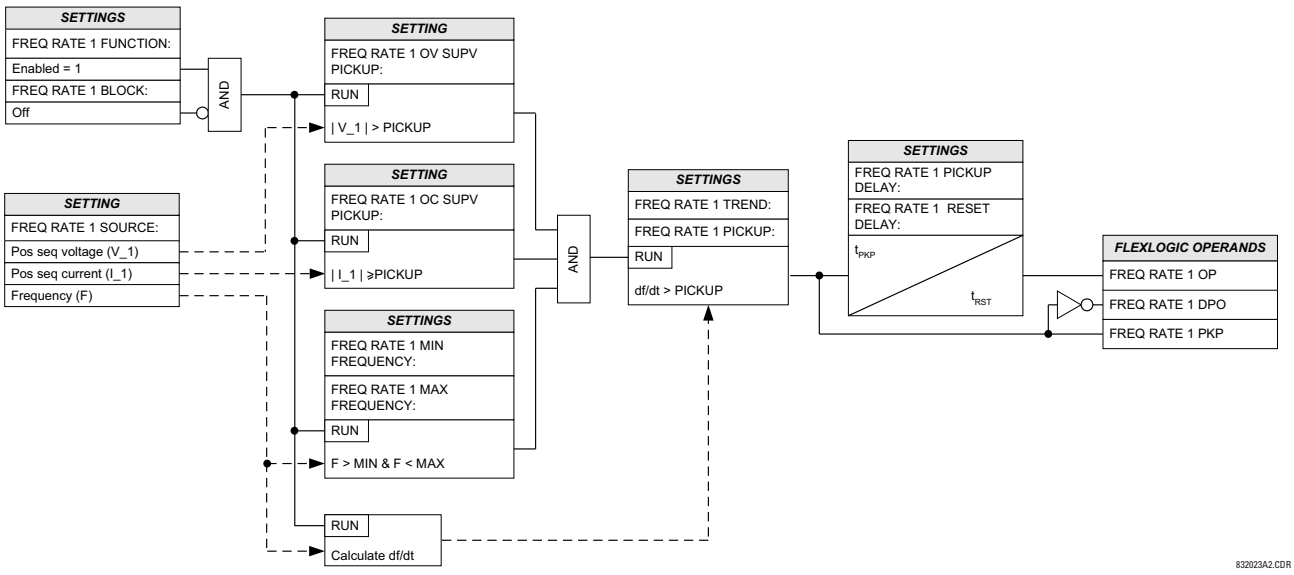

Figure 5–147: FREQUENCY RATE OF CHANGE SCHEME LOGIC

a) GENERAL SETTINGS

PATH: SETTINGS ⇨⇩ CONTROL ELEMENTS ⇨⇩ FREQUENCY OOB ACCUMULATION

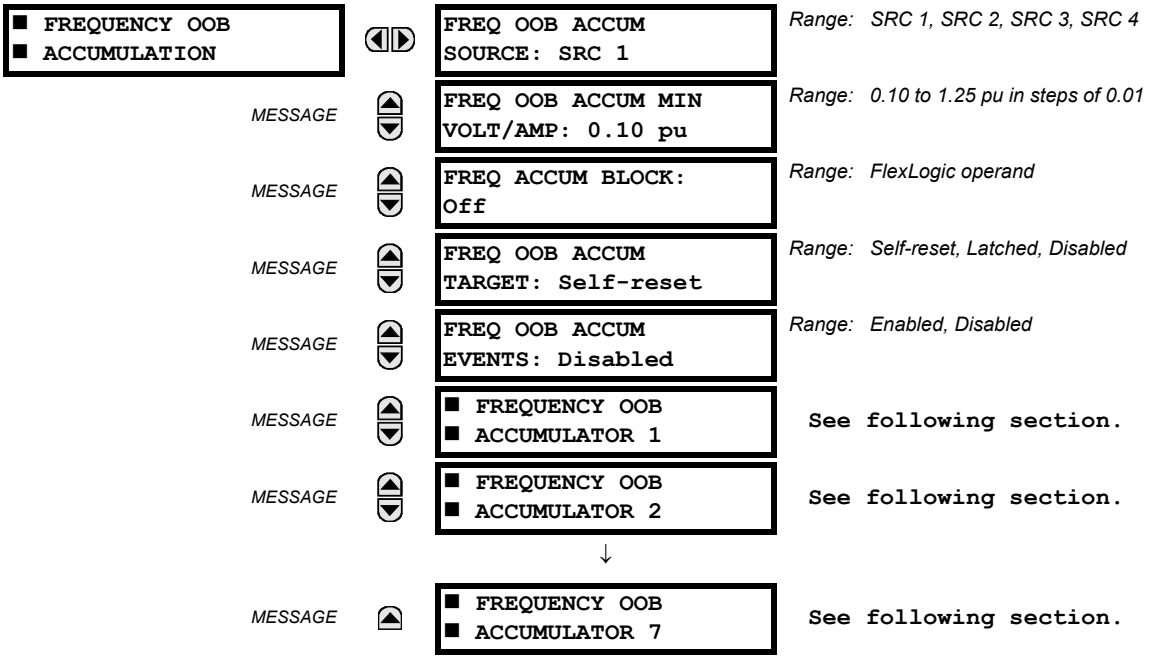

The turbine portion of a generator is designed to operate in a narrow frequency range around the nominal, typically ±5%. As the turbine overspeeds (typically due to load rejection) or coasts down, the turbine will pass through operating frequencies where the turbine blades find stimulus at their natural frequencies. Blade vibrations at these natural frequencies result is stress on the blades that is accumulated and can result in cracking in some parts of the blade structure, most likely the tie wires or blade covers. Though typically not catastrophic, the stress can change the vibration behavior of the blade so that they can have natural resonances closer to the normal operating frequency. This element will provide diagnostic information and alarms to the customer based on the accumulated off-nominal frequency operation time of a turbine over several frequency bands and can then be used to schedule maintenance or other actions as desired by the customer.

The available setting of an upper and lower frequency for each band enables the user to overlap bands of frequencies in the accumulation function. The accumulation function in any band can be blocked as desired. For example, accumulation may be blocked during an out-of-service condition as set via an input to the relay.

The following settings are available and apply to all accumulators.

- **FREQ OOB ACCUM SOURCE**: This setting selects the source for the signal to be measured. The element first checks for a live phase voltage available from the selected source. If voltage is not available, the element attempts to use a phase current. If neither voltage nor current is available, the element will not operate, as it will not measure a parameter below the minimum voltage/current setting.
- **FREQ OOB ACCUM MIN VOLT/AMP**: This setting specifies the minimum per-unit positive-sequence voltage or current level required to allow the frequency out-of-band accumulators to operate. This threshold is used to prevent an incorrect accumulation when operating quantity is too low.
- **FREQ ACCUM BLOCK**: This setting selects a FlexLogic operand to block out-of-band frequency accumulation in all bands. This is typically required to avoid unnecessary accumulation when relay testing is being performed.

b) ACCUMULATORS 1 TO 7

PATH: SETTINGS ⇨⇩ CONTROL ELEMENTS ⇨⇩ FREQUENCY OOB ACCUMULATION ⇨ FREQUENCY OOB ACCUMULATOR 1(7)

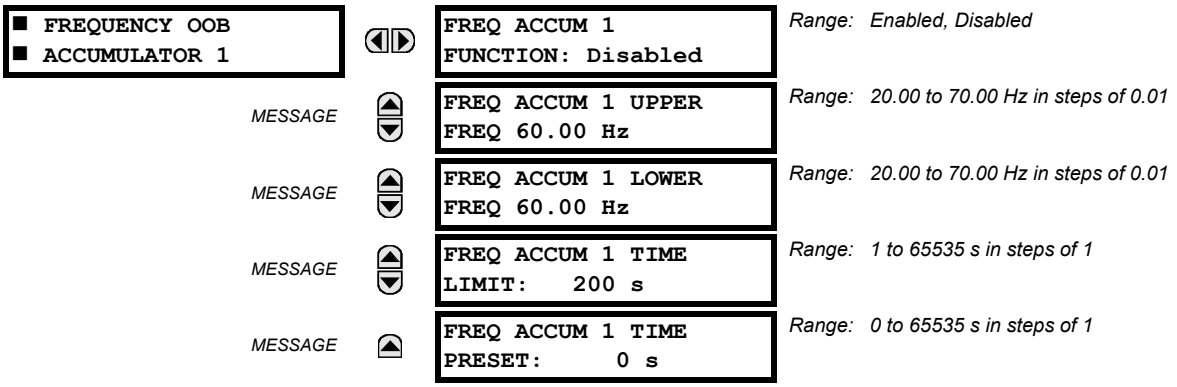

Seven frequency out-of-band accumulators are available. The following settings are available for each accumulator.

- **FREQ ACCUM 1 FUNCTION**: This setting enables and disabled a particular frequency band.
- **FREQ ACCUM 1 UPPER FREQ**: This setting specifies the upper frequency value, in Hz, below which band 1 values start to accumulate. This upper frequency value must be greater than the lower frequency value.
- **FREQ ACCUM 1 LOWER FREQ**: This setting specifies the lower frequency value, in Hz, above which band 1 values start to accumulate. This lower frequency value must be less than the upper frequency value.
- **FREQ ACCUM 1 TIME LIMIT**: This value specifies the accumulation time, in seconds, at which the overfrequency accumulation band exceeds the overfrequency accumulation limit and operates.
- **FREQ ACCUM 1 TIME PRESET**: This setting allows the user to either transfer accumulated frequency time of operation values from a previous hardware platform to a new platform, or, given that some knowledge of the operation of the turbine is known, to start accumulation at a user-specified value.

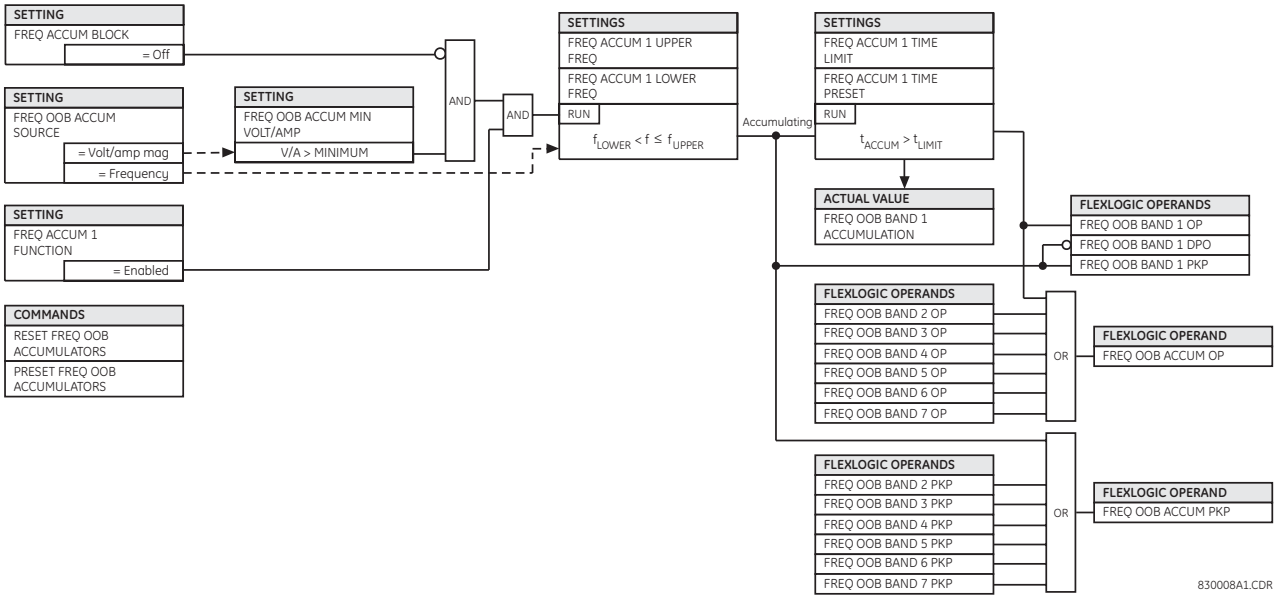

Figure 5–148: FREQUENCY OUT-OF-BAND ACCUMULATION LOGIC

a) SETTINGS

PATH: SETTINGS ⇨⇩ CONTROL ELEMENTS ⇨⇩ SYNCHROCHECK ⇨ SYNCHROCHECK 1(4)

■ SYNCHROCHECK 1 ■		SYNCHK1 FUNCTION: Disabled	Range: Disabled, Enabled
	MESSAGE	SYNCHK1 BLOCK: Off	Range: FlexLogic operand
	MESSAGE	SYNCHK1 V1 SOURCE: SRC 1	Range: SRC 1, SRC 2, SRC 3, SRC 4
	MESSAGE	SYNCHK1 V2 SOURCE: SRC 2	Range: SRC 1, SRC 2, SRC 3, SRC 4
	MESSAGE	SYNCHK1 MAX VOLT DIFF: 10000 V	Range: 0 to 400000 V in steps of 1
	MESSAGE	SYNCHK1 MAX ANGLE DIFF: 30	Range: 0 to 100° in steps of 1
	MESSAGE	SYNCHK1 MAX FREQ DIFF: 1.00 Hz	Range: 0.00 to 2.00 Hz in steps of 0.01
	MESSAGE	SYNCHK1 MAX FREQ HYSTERESIS: 0.06 Hz	Range: 0.00 to 0.10 Hz in steps of 0.01
	MESSAGE	SYNCHK1 DEAD SOURCE SELECT: LV1 and DV2	Range: None, LV1 and DV2, DV1 and LV2, DV1 or DV2, DV1 Xor DV2, DV1 and DV2
	MESSAGE	SYNCHK1 DEAD V1 MAX VOLT: 0.30 pu	Range: 0.00 to 1.25 pu in steps of 0.01
	MESSAGE	SYNCHK1 DEAD V2 MAX VOLT: 0.30 pu	Range: 0.00 to 1.25 pu in steps of 0.01
	MESSAGE	SYNCHK1 LIVE V1 MIN VOLT: 0.70 pu	Range: 0.00 to 1.25 pu in steps of 0.01
	MESSAGE	SYNCHK1 LIVE V2 MIN VOLT: 0.70 pu	Range: 0.00 to 1.25 pu in steps of 0.01
	MESSAGE	SYNCHK1 TARGET: Self-reset	Range: Self-reset, Latched, Disabled
	MESSAGE	SYNCHK1 EVENTS: Disabled	Range: Disabled, Enabled

There are four identical synchrocheck elements available, numbered 1 to 4.

The synchronism check function is intended for supervising the paralleling of two parts of a system which are to be joined by the closure of a circuit breaker. The synchrocheck elements are typically used at locations where the two parts of the system are interconnected through at least one other point in the system.

Synchrocheck verifies that the voltages (V1 and V2) on the two sides of the supervised circuit breaker are within set limits of magnitude, angle and frequency differences. The time that the two voltages remain within the admissible angle difference is determined by the setting of the phase angle difference $\Delta\Phi$ and the frequency difference ΔF (slip frequency). It can be defined as the time it would take the voltage phasor V1 or V2 to traverse an angle equal to $2 \times \Delta\Phi$ at a frequency equal to the frequency difference ΔF. This time can be calculated by:

$$T = \frac{1}{\frac{360^\circ}{2 \times \Delta\Phi} \times \Delta F} \quad \text{(EQ 5.48)}$$

where: $\Delta\Phi$ = phase angle difference in degrees; ΔF = frequency difference in Hz.

If one or both sources are de-energized, the synchrocheck programming can allow for closing of the circuit breaker using undervoltage control to by-pass the synchrocheck measurements (dead source function).

- **SYNCHK1 V1 SOURCE**: This setting selects the source for voltage V1 (see NOTES below).
- **SYNCHK1 V2 SOURCE**: This setting selects the source for voltage V2, which must not be the same as used for the V1 (see NOTES below).
- **SYNCHK1 MAX VOLT DIFF**: This setting selects the maximum primary voltage difference in volts between the two sources. A primary voltage magnitude difference between the two input voltages below this value is within the permissible limit for synchronism.
- **SYNCHK1 MAX ANGLE DIFF:** This setting selects the maximum angular difference in degrees between the two sources. An angular difference between the two input voltage phasors below this value is within the permissible limit for synchronism.
- **SYNCHK1 MAX FREQ DIFF:** This setting selects the maximum frequency difference in 'Hz' between the two sources. A frequency difference between the two input voltage systems below this value is within the permissible limit for synchronism.
- **SYNCHK1 MAX FREQ HYSTERESIS**: This setting specifies the required hysteresis for the maximum frequency difference condition. The condition becomes satisfied when the frequency difference becomes lower than **SYNCHK1 MAX FREQ DIFF**. Once the Synchrocheck element has operated, the frequency difference must increase above the **SYNCHK1 MAX FREQ DIFF** + **SYNCHK1 MAX FREQ HYSTERESIS** sum to drop out (assuming the other two conditions, voltage and angle, remain satisfied).
- **SYNCHK1 DEAD SOURCE SELECT:** This setting selects the combination of dead and live sources that will by-pass synchronism check function and permit the breaker to be closed when one or both of the two voltages (V1 or/and V2) are below the maximum voltage threshold. A dead or live source is declared by monitoring the voltage level. Six options are available:

  None: Dead Source function is disabled
  LV1 and DV2: Live V1 and Dead V2
  DV1 and LV2: Dead V1 and Live V2
  DV1 or DV2: Dead V1 or Dead V2
  DV1 Xor DV2: Dead V1 exclusive-or Dead V2 (one source is Dead and the other is Live)
  DV1 and DV2: Dead V1 and Dead V2

- **SYNCHK1 DEAD V1 MAX VOLT:** This setting establishes a maximum voltage magnitude for V1 in 1 'pu'. Below this magnitude, the V1 voltage input used for synchrocheck will be considered "Dead" or de-energized.
- **SYNCHK1 DEAD V2 MAX VOLT**: This setting establishes a maximum voltage magnitude for V2 in 'pu'. Below this magnitude, the V2 voltage input used for synchrocheck will be considered "Dead" or de-energized.
- **SYNCHK1 LIVE V1 MIN VOLT**: This setting establishes a minimum voltage magnitude for V1 in 'pu'. Above this magnitude, the V1 voltage input used for synchrocheck will be considered "Live" or energized.
- **SYNCHK1 LIVE V2 MIN VOLT**: This setting establishes a minimum voltage magnitude for V2 in 'pu'. Above this magnitude, the V2 voltage input used for synchrocheck will be considered "Live" or energized.

NOTES ON THE SYNCHROCHECK FUNCTION:

1. The selected sources for synchrocheck inputs V1 and V2 (which must not be the same source) may include both a three-phase and an auxiliary voltage. The relay will automatically select the specific voltages to be used by the synchrocheck element in accordance with the following table.

NO.	V1 OR V2 (SOURCE Y)	V2 OR V1 (SOURCE Z)	AUTO-SELECTED COMBINATION		AUTO-SELECTED VOLTAGE
			SOURCE Y	SOURCE Z	
1	Phase VTs and Auxiliary VT	Phase VTs and Auxiliary VT	Phase	Phase	VAB
2	Phase VTs and Auxiliary VT	Phase VT	Phase	Phase	VAB
3	Phase VT	Phase VT	Phase	Phase	VAB

NO.	V1 OR V2 (SOURCE Y)	V2 OR V1 (SOURCE Z)	AUTO-SELECTED COMBINATION		AUTO-SELECTED VOLTAGE
			SOURCE Y	SOURCE Z	
4	Phase VT and Auxiliary VT	Auxiliary VT	Phase	Auxiliary	V auxiliary (as set for Source z)
5	Auxiliary VT	Auxiliary VT	Auxiliary	Auxiliary	V auxiliary (as set for selected sources)

The voltages V1 and V2 will be matched automatically so that the corresponding voltages from the two sources will be used to measure conditions. A phase to phase voltage will be used if available in both sources; if one or both of the Sources have only an auxiliary voltage, this voltage will be used. For example, if an auxiliary voltage is programmed to VAG, the synchrocheck element will automatically select VAG from the other source. If the comparison is required on a specific voltage, the user can externally connect that specific voltage to auxiliary voltage terminals and then use this "Auxiliary Voltage" to check the synchronism conditions.

If using a single CT/VT module with both phase voltages and an auxiliary voltage, ensure that only the auxiliary voltage is programmed in one of the sources to be used for synchrocheck.

NOTE

Exception: Synchronism cannot be checked between Delta connected phase VTs and a Wye connected auxiliary voltage.

2. The relay measures frequency and Volts/Hz from an input on a given source with priorities as established by the configuration of input channels to the source. The relay will use the phase channel of a three-phase set of voltages if programmed as part of that source. The relay will use the auxiliary voltage channel only if that channel is programmed as part of the Source and a three-phase set is not.

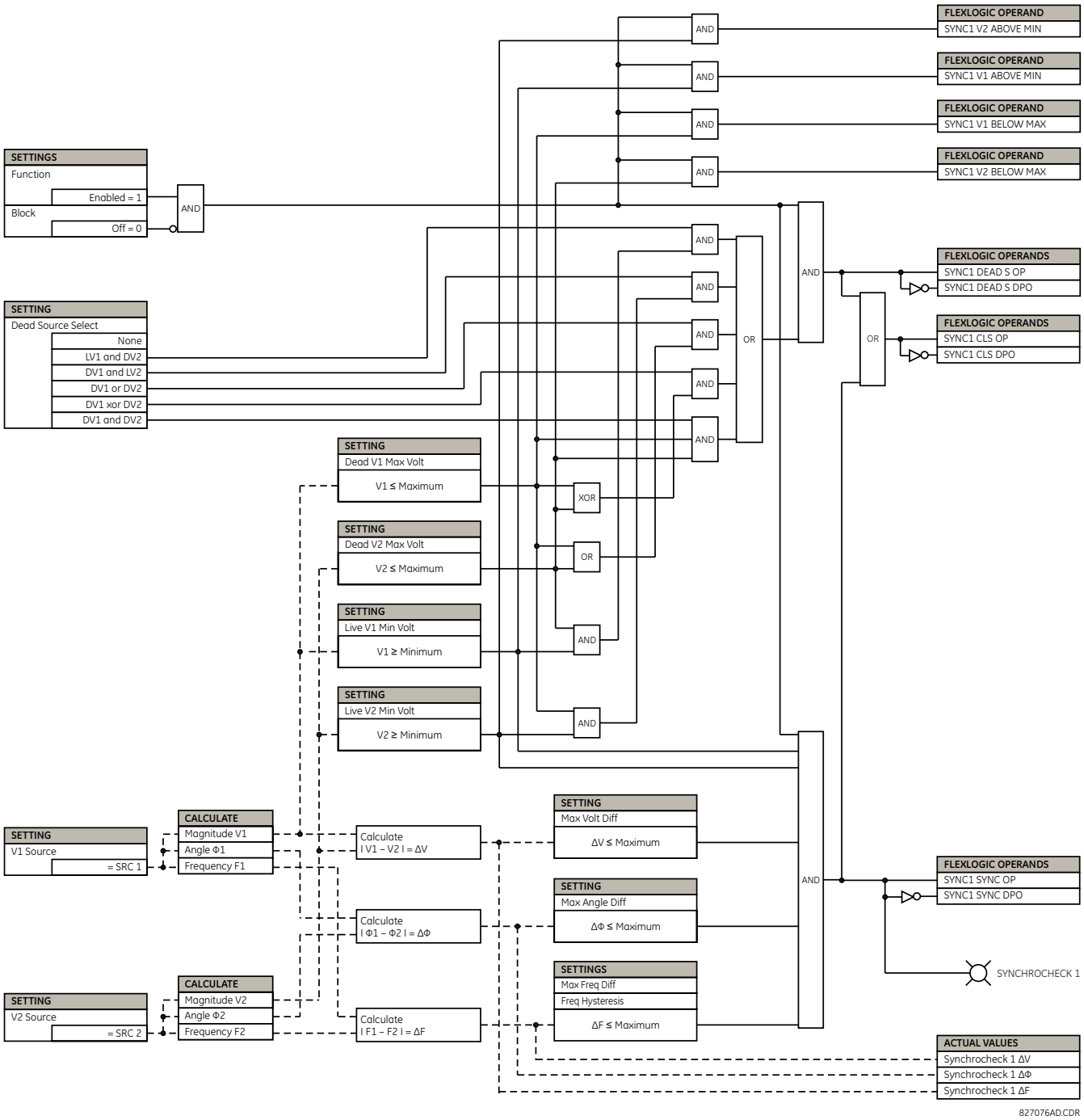

Figure 5–149: SYNCHROCHECK SCHEME LOGIC

b) SPECIAL APPLICATION OF THE SYNCHROCHECK ELEMENT

The synchrocheck element is intended for applications where the potential sources are located on either side of the breaker to be closed. It can also be used in cases where a power transformer is located between the two potential sources by compensating for the power transformer phase shift with the auxiliary VT connection to the G60 and the auxiliary VT connection setting, as shown in the following example for the 230/13.8 kV Yn/D-1 transformer.

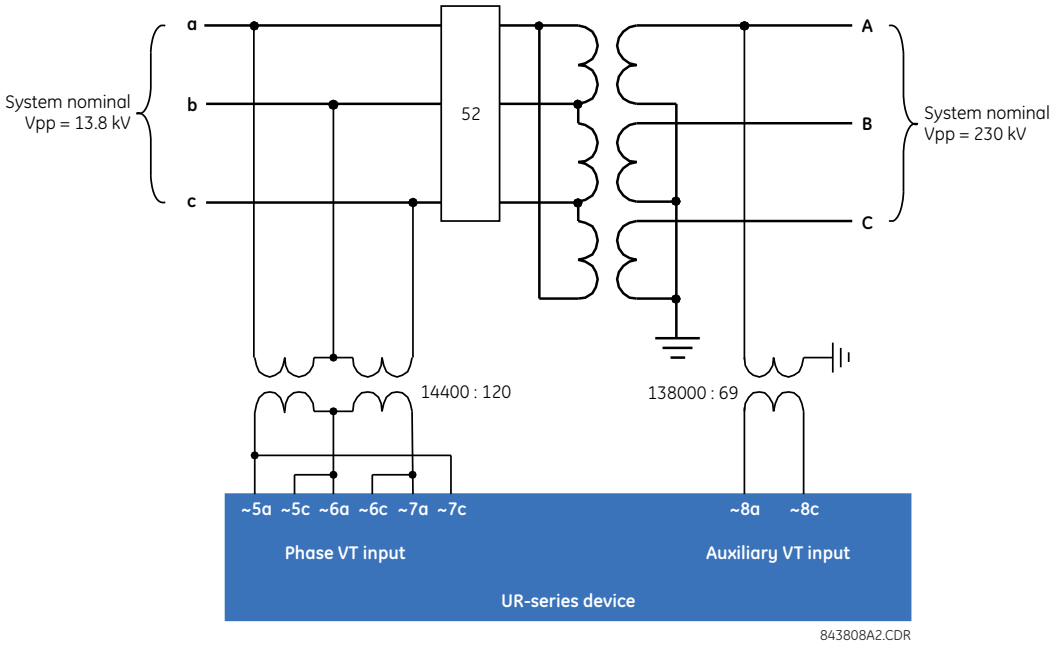

Figure 5–150: SYNCHROCHECK APPLIED ACROSS A TRANSFORMER

In this example, the phase voltage VT input is programmed as "Delta" with a ratio of 14400 V / 120 V = 120 and with a secondary voltage setting of 13800 V / 120 = 115 volts. The auxiliary VT connection is selected to be VAB since this vector is in phase with VA on the transformer 13.8 kV side. The auxiliary secondary voltage setting is 230000 V / (√3/2000) = 66.4 volts and the auxiliary VT ratio is calculated as 2000 * √3 * 13.8 kV / 230 kV = 208. Note that auxiliary VT ratio is chosen to match primary voltage on the 13.8 kV side, because synchrocheck is comparing voltages in primary volts. Therefore metered values for the auxiliary VT now reflect and are referenced to the AB voltage of the 13.8 kV side of the transformer.

PATH: SETTINGS ⇨⇩ CONTROL ELEMENTS ⇨⇩ DIGITAL ELEMENTS ⇨ DIGITAL ELEMENT 1(48)

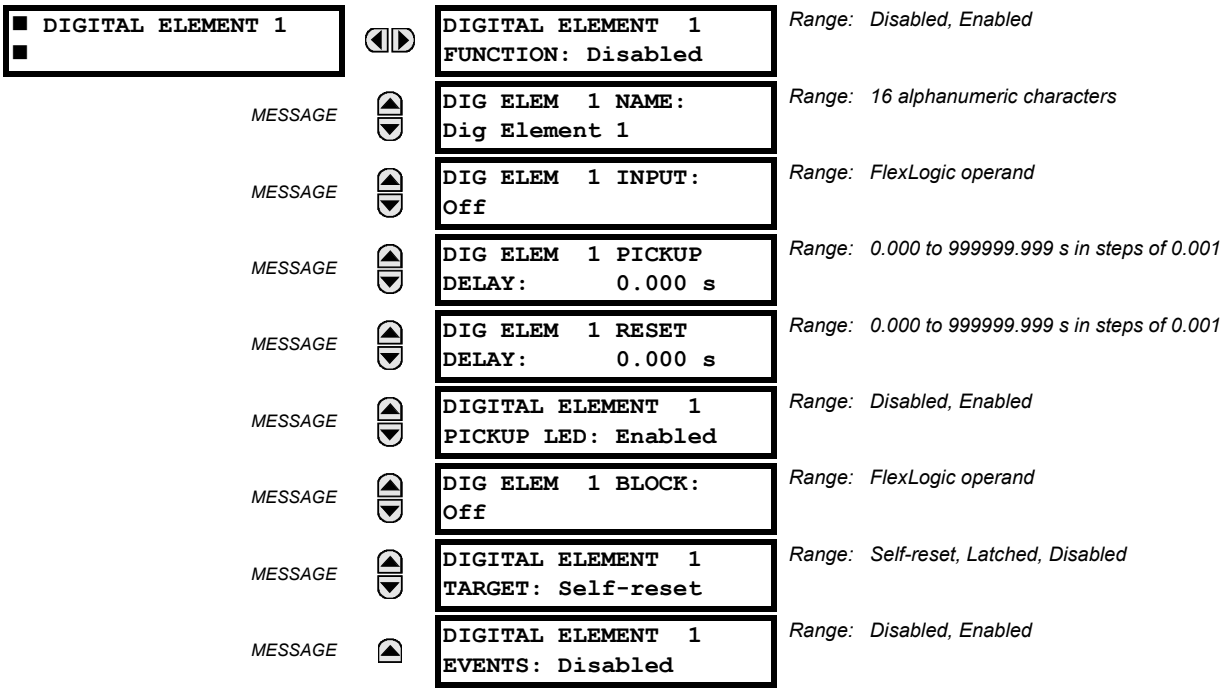

NOTE

Digital elements run once per power system cycle.

As such they can easily fail to react to an input signal or a block signal with a duration less than one power system cycle. This also means that digital element output can react up to one power system cycle later than the pickup and reset delay settings indicate.

Do not use digital elements with transient signals, such as communications commands. Do not use digital elements where random delays of up to one cycle cannot be tolerated, such as in high speed protection.

There are 48 identical digital elements available, numbered 1 to 48. A digital element can monitor any FlexLogic operand and present a target message and/or enable events recording depending on the output operand state. The digital element settings include a name which will be referenced in any target message, a blocking input from any selected FlexLogic operand, and a timer for pickup and reset delays for the output operand.

- **DIGITAL ELEMENT 1 INPUT:** Selects a FlexLogic operand to be monitored by the digital element.
- **DIGITAL ELEMENT 1 PICKUP DELAY:** Sets the required time delay from element pickup to element operation. If a pickup delay is not required, set to "0". To avoid nuisance alarms, set the delay greater than the operating time of the breaker.
- **DIGITAL ELEMENT 1 RESET DELAY:** Sets the time delay to reset. If a reset delay is not required, set to “0”.
- **DIGITAL ELEMENT 1 PICKUP LED**: This setting enables or disabled the digital element pickup LED. When set to “Disabled”, the operation of the pickup LED is blocked.

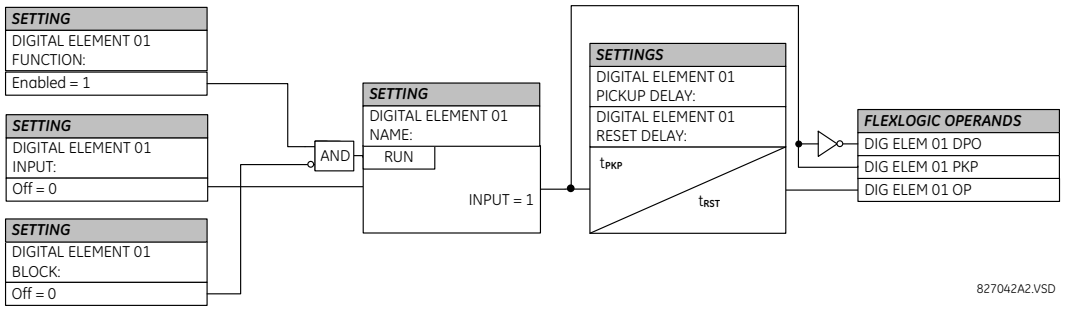

Figure 5–151: DIGITAL ELEMENT SCHEME LOGIC

CIRCUIT MONITORING APPLICATIONS:

Some versions of the digital input modules include an active voltage monitor circuit connected across form-A contacts. The voltage monitor circuit limits the trickle current through the output circuit (see technical specifications for form-A).

As long as the current through the voltage monitor is above a threshold (see technical specifications for form-A), the "Cont Op 1 VOn" FlexLogic operand will be set (for contact input 1 – corresponding operands exist for each contact output). If the output circuit has a high resistance or the DC current is interrupted, the trickle current will drop below the threshold and the "Cont Op 1 VOff" FlexLogic operand will be set. Consequently, the state of these operands can be used as indicators of the integrity of the circuits in which form-A contacts are inserted.

EXAMPLE 1: BREAKER TRIP CIRCUIT INTEGRITY MONITORING

In many applications it is desired to monitor the breaker trip circuit integrity so problems can be detected before a trip operation is required. The circuit is considered to be healthy when the voltage monitor connected across the trip output contact detects a low level of current, well below the operating current of the breaker trip coil. If the circuit presents a high resistance, the trickle current will fall below the monitor threshold and an alarm would be declared.

In most breaker control circuits, the trip coil is connected in series with a breaker auxiliary contact which is open when the breaker is open (see diagram below). To prevent unwanted alarms in this situation, the trip circuit monitoring logic must include the breaker position.

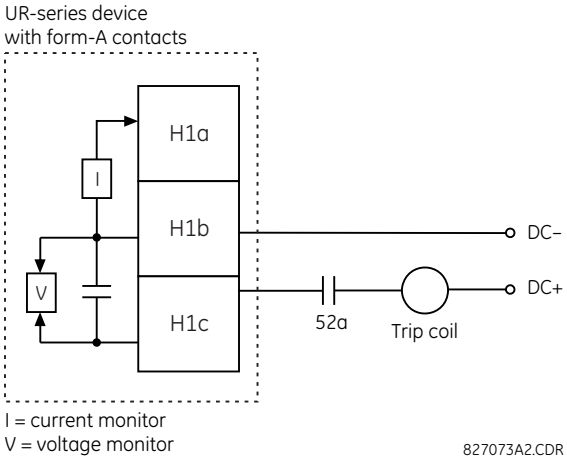

Figure 5–152: TRIP CIRCUIT EXAMPLE 1

Assume the output contact H1 is a trip contact. Using the contact output settings, this output will be given an ID name; for example, “Cont Op 1". Assume a 52a breaker auxiliary contact is connected to contact input H5a to monitor breaker status. Using the contact input settings, this input will be given an ID name, for example, “Cont Ip 1", and will be set “On” when the breaker is closed. The settings to use digital element 1 to monitor the breaker trip circuit are indicated below (EnerVista UR Setup example shown):

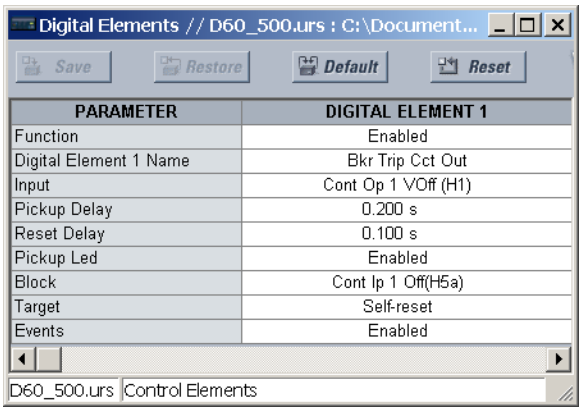

EXAMPLE 2: BREAKER TRIP CIRCUIT INTEGRITY MONITORING

If it is required to monitor the trip circuit continuously, independent of the breaker position (open or closed), a method to maintain the monitoring current flow through the trip circuit when the breaker is open must be provided (as shown in the figure below). This can be achieved by connecting a suitable resistor (see figure below) across the auxiliary contact in the trip circuit. In this case, it is not required to supervise the monitoring circuit with the breaker position – the **BLOCK** setting is selected to “Off”. In this case, the settings are as follows (EnerVista UR Setup example shown).

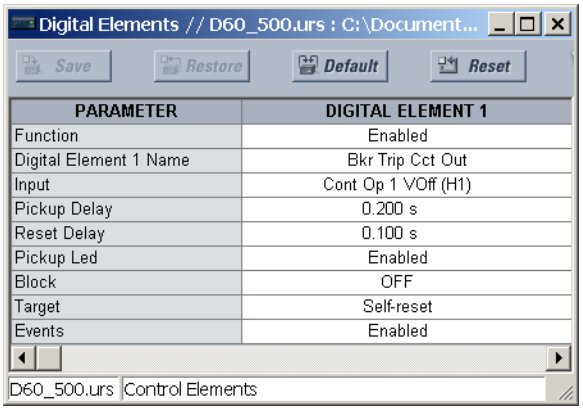

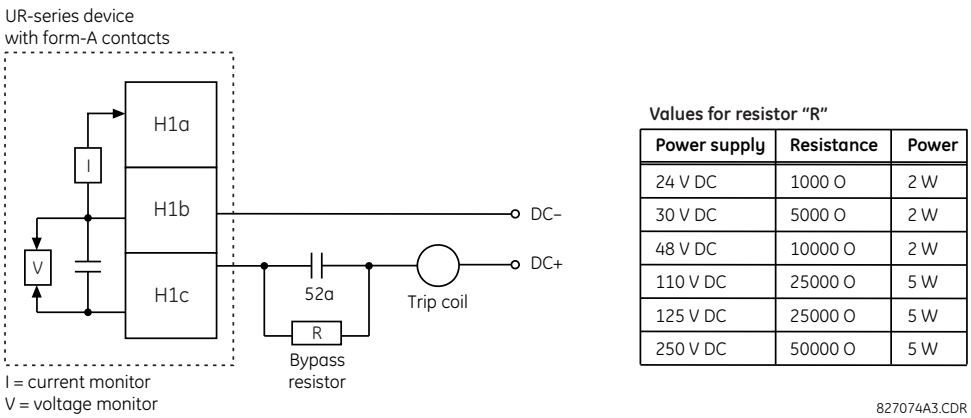

Values for resistor “R”

Power supply	Resistance	Power
24 V DC	1000 Ω	2 W
30 V DC	5000 Ω	2 W
48 V DC	10000 Ω	2 W
110 V DC	25000 Ω	5 W
125 V DC	25000 Ω	5 W
250 V DC	50000 Ω	5 W

Figure 5–153: TRIP CIRCUIT EXAMPLE 2

NOTE

The wiring connection for two examples above is applicable to both form-A contacts with voltage monitoring and solid-state contact with voltage monitoring.

5.7.11 DIGITAL COUNTERS

PATH: SETTINGS ⇨⇩ CONTROL ELEMENTS ⇨⇩ DIGITAL COUNTERS ⇨ COUNTER 1(8)

■ COUNTER 1 ■		COUNTER 1 FUNCTION: Disabled	Range: Disabled, Enabled
	MESSAGE	COUNTER 1 NAME: Counter 1	Range: 12 alphanumeric characters
	MESSAGE	COUNTER 1 UNITS:	Range: 6 alphanumeric characters
	MESSAGE	COUNTER 1 PRESET: 0	Range: –2,147,483,648 to +2,147,483,647
	MESSAGE	COUNTER 1 COMPARE: 0	Range: –2,147,483,648 to +2,147,483,647
	MESSAGE	COUNTER 1 UP: Off	Range: FlexLogic operand
	MESSAGE	COUNTER 1 DOWN: Off	Range: FlexLogic operand
	MESSAGE	COUNTER 1 BLOCK: Off	Range: FlexLogic operand
	MESSAGE	CNT1 SET TO PRESET: Off	Range: FlexLogic operand
	MESSAGE	COUNTER 1 RESET: Off	Range: FlexLogic operand
	MESSAGE	COUNT1 FREEZE/RESET: Off	Range: FlexLogic operand
	MESSAGE	COUNT1 FREEZE/COUNT: Off	Range: FlexLogic operand

There are eight identical digital counters, numbered from 1 to 8. A digital counter counts the number of state transitions from Logic 0 to Logic 1. The counter is used to count operations such as the pickups of an element, the changes of state of an external contact (e.g. breaker auxiliary switch), or pulses from a watt-hour meter.

- **COUNTER 1 UNITS:** Assigns a label to identify the unit of measure pertaining to the digital transitions to be counted. The units label will appear in the corresponding actual values status.
- **COUNTER 1 PRESET:** Sets the count to a required preset value before counting operations begin, as in the case where a substitute relay is to be installed in place of an in-service relay, or while the counter is running.
- **COUNTER 1 COMPARE:** Sets the value to which the accumulated count value is compared. Three FlexLogic output operands are provided to indicate if the present value is 'more than (HI)', 'equal to (EQL)', or 'less than (LO)' the set value.
- **COUNTER 1 UP:** Selects the FlexLogic operand for incrementing the counter. If an enabled UP input is received when the accumulated value is at the limit of +2,147,483,647 counts, the counter will rollover to –2,147,483,648.
- **COUNTER 1 DOWN:** Selects the FlexLogic operand for decrementing the counter. If an enabled DOWN input is received when the accumulated value is at the limit of –2,147,483,648 counts, the counter will rollover to +2,147,483,647.
- **COUNTER 1 BLOCK:** Selects the FlexLogic operand for blocking the counting operation. All counter operands are blocked.

- **CNT1 SET TO PRESET:** Selects the FlexLogic operand used to set the count to the preset value. The counter will be set to the preset value in the following situations:
  1. When the counter is enabled and the **CNT1 SET TO PRESET** operand has the value 1 (when the counter is enabled and **CNT1 SET TO PRESET** operand is 0, the counter will be set to 0).
  2. When the counter is running and the **CNT1 SET TO PRESET** operand changes the state from 0 to 1 (**CNT1 SET TO PRESET** changing from 1 to 0 while the counter is running has no effect on the count).
  3. When a reset or reset/freeze command is sent to the counter and the **CNT1 SET TO PRESET** operand has the value 1 (when a reset or reset/freeze command is sent to the counter and the **CNT1 SET TO PRESET** operand has the value 0, the counter will be set to 0).
- **COUNTER 1 RESET:** Selects the FlexLogic operand for setting the count to either "0" or the preset value depending on the state of the **CNT1 SET TO PRESET** operand.
- **COUNTER 1 FREEZE/RESET:** Selects the FlexLogic operand for capturing (freezing) the accumulated count value into a separate register with the date and time of the operation, and resetting the count to "0".
- **COUNTER 1 FREEZE/COUNT:** Selects the FlexLogic operand for capturing (freezing) the accumulated count value into a separate register with the date and time of the operation, and continuing counting. The present accumulated value and captured frozen value with the associated date/time stamp are available as actual values. If control power is interrupted, the accumulated and frozen values are saved into non-volatile memory during the power down operation.

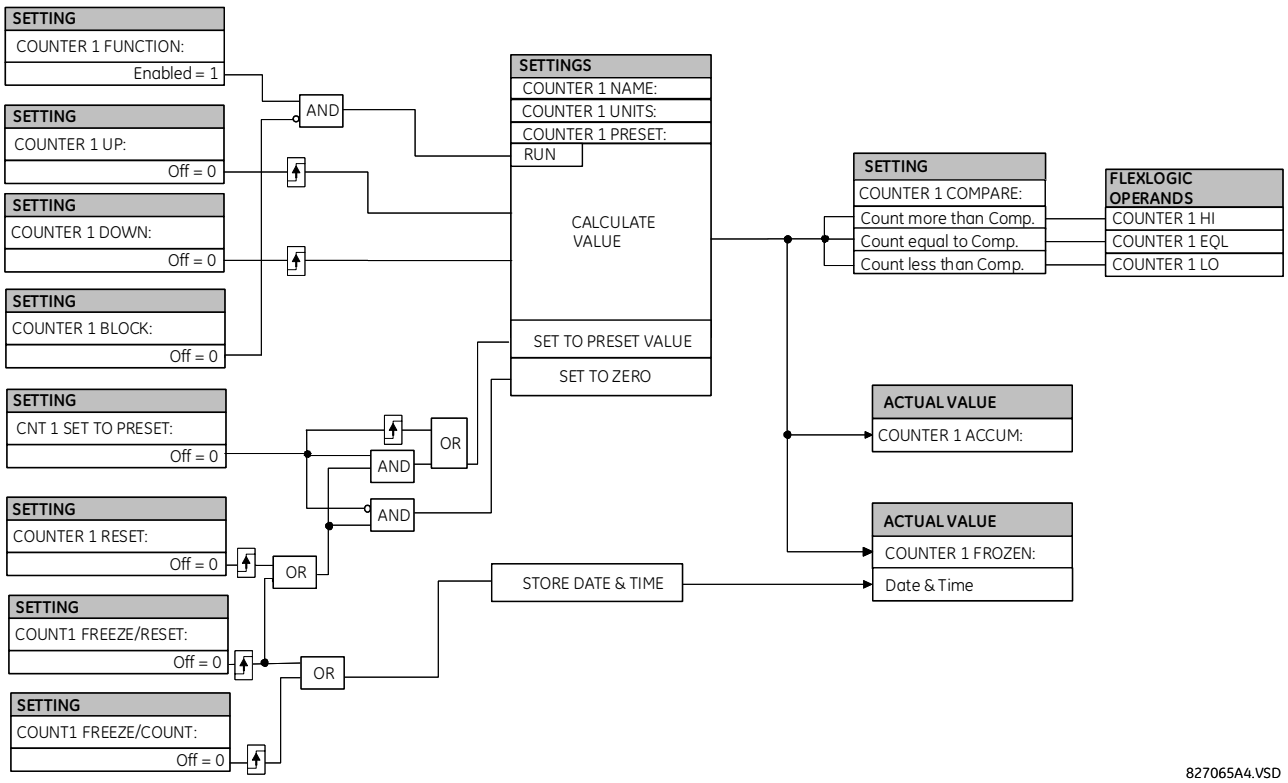

Figure 5–154: DIGITAL COUNTER SCHEME LOGIC

a) MAIN MENU

PATH: SETTINGS ⇨⇩ CONTROL ELEMENTS ⇨⇩ MONITORING ELEMENTS

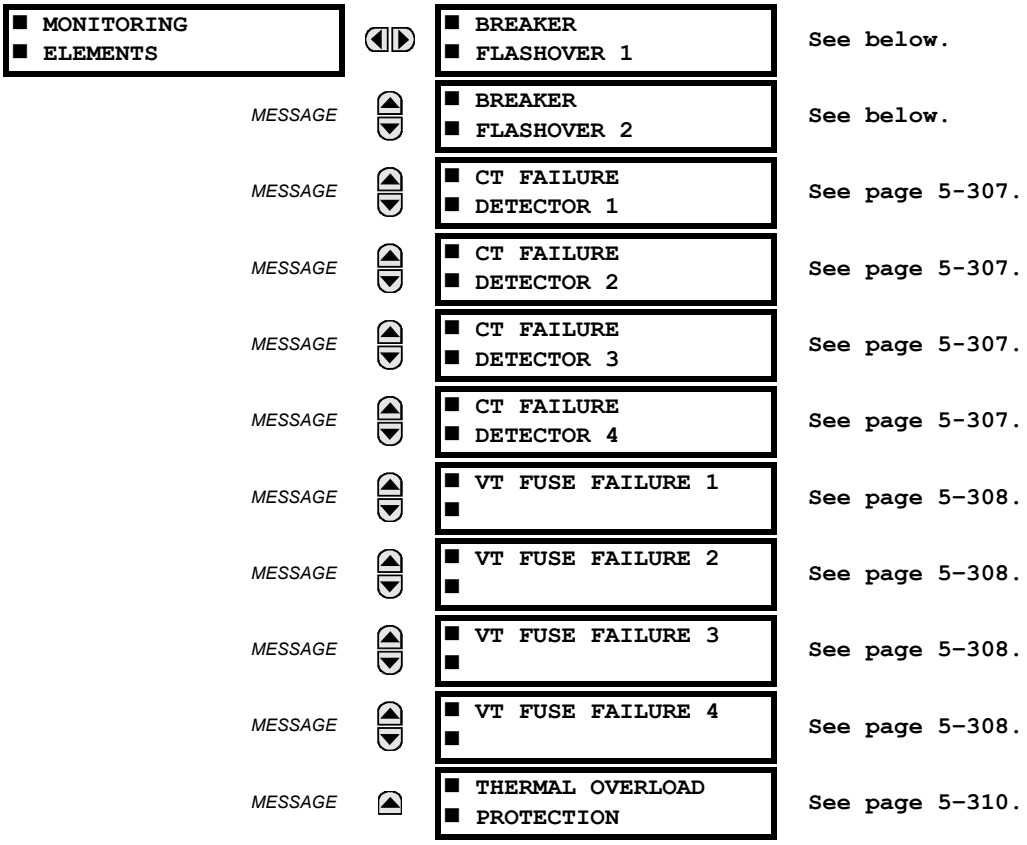

b) BREAKER FLASHOVER

PATH: SETTINGS ⇨⇩ CONTROL ELEMENTS ⇨⇩ MONITORING ELEMENTS ⇨⇩ BREAKER FLASHOVER 1(2)

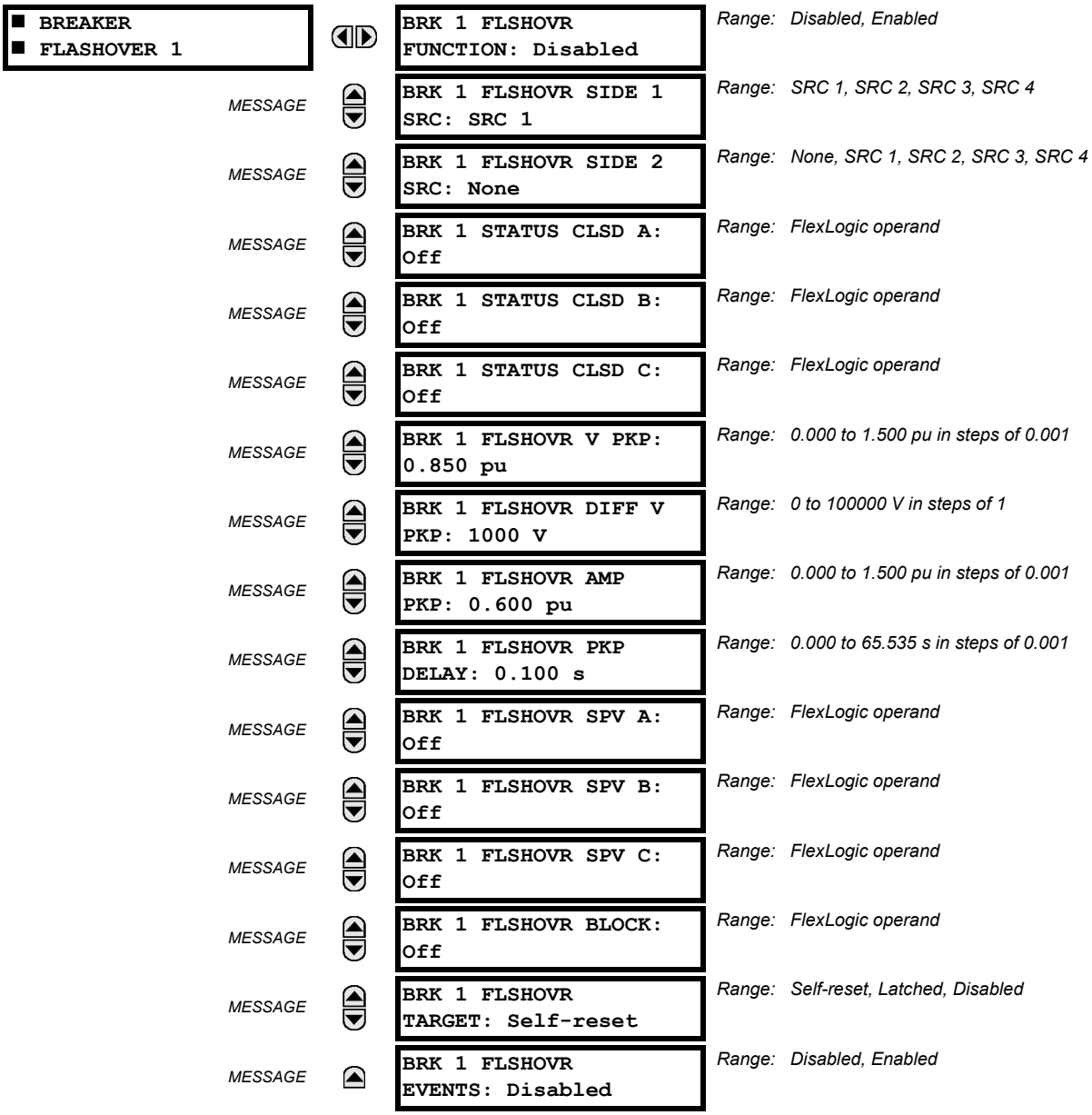

The detection of the breaker flashover is based on the following condition:

- Breaker open,
- When phase voltage measured from either side of the breaker is greater than the setting,
- Measured current through the breaker is greater than the pickup setting, and
- Voltage difference across the breaker drops below the pickup setting (only applicable to six VTs application)

Furthermore, the scheme is applicable for cases where one or two sets of three-phase voltages are available across the breaker, as follows:

- One set of three-phase voltages is available across the breaker (three VTs application)
- Two sets of three-phase voltages are available across the breaker (six VTs application)

THREE VT BREAKER FLASHOVER APPLICATION

When only one set of VTs is available across the breaker, set the **BRK 1 FLSHOVR SIDE 2 SRC** setting to "None."

NOTE

Voltages must be present prior to flashover conditions. If the three VTs are placed after the breaker on the line (or feeder), and the downstream breaker is open, the measured voltage would be zero and the flashover element will not be initiated.

The flashover detection resets if the current drops below **BRK 1 FLSHOVR AMP PKP**, the breaker closes, or the FlexLogic operand selected by **BRK 1 FLSHOVR SPV A** changes to high. It is recommended to use the supervision **BRK 1 FLSHOVR SPV A** setting, and select a trip operand that does not allow the flashover element to pick up prior to the trip.

The flashover detection can be used for external alarm, re-tripping the breaker, or energizing the lockout relay.

Consider the following configuration:

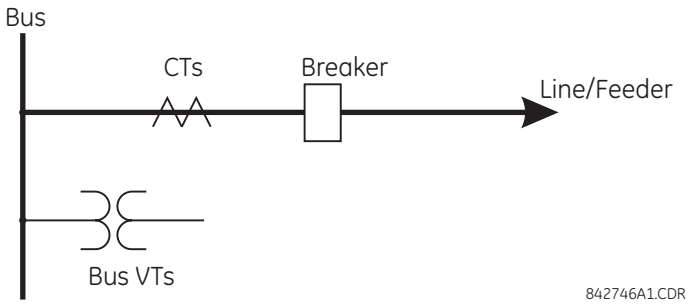

The source 1 (SRC1) phase currents are feeder CTs and phase voltages are bus VTs, and Contact Input 1 is set as Breaker 52a contact. The conditions prior to flashover detection are:

- 52a status = 0
- VAg is greater than the **BRK 1 FLSHOVR V PKP** setting
- IA is below **BRK 1 FLSHOVR AMP PKP** (ideally, IA = 0)

The conditions at flashover detection are:

- 52a status = 0
- VAg is greater or lesser than the **BRK 1 FLSHOVR V PKP** setting
- IA is greater than the **BRK 1 FLSHOVR AMP PKP** setting

SIX VT BREAKER FLASHOVER APPLICATION

In a six-VT application, the VTs located on both sides of a breaker are available. When the breaker is open, the voltage difference across the breaker is the rated voltage if the line is not energized from the remote end, or it can be two times the rated voltage at the time of synchronization if the line is energized from the remote. At the occurrence of breaker flashover, the voltage difference across breaker drops and current greater than **BRK 1 FLSHOVR AMP PKP** starts flowing through the breaker. These conditions are also true for a normal closed operation of a breaker where the voltage difference across breaker is practically zero and load current flows through the breaker. To distinguish between breaker flashover and normal closed operation of breaker, the Breaker Status is utilized.

In a six-VT configuration, if the voltages from VTs located on one of the sides of breaker disappear due to VT fuse failure or other reason, a three-VT configuration can provide the breaker flashover detection. If however, the blocking of breaker flashover detection is wanted under voltage loss on one side condition, then it can be done by applying the appropriate FlexLogic operand to the **BRK FLSHOVR BLOCK** setting.

Consider the following configuration:

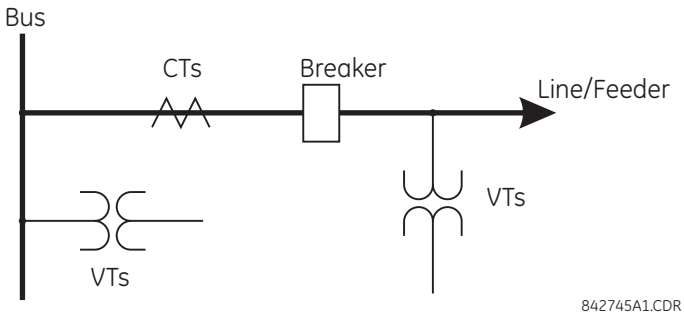

The source 1 (SRC1) phase currents are CTs and phase voltages are bus VTs. The source 2 (SRC2) phase voltages are line VTs. Contact input 1 is set as the breaker 52a contact (optional).

The conditions prior to flashover detection are:

- 52a status = 0
- VAg or Vag greater than the BRK 1 FLSHOVR V PKP setting
- IA is below BRK 1 FLSHOVR AMP PKP (ideally, IA = 0)
- DVA is greater than the BRK 1 FLSHOVR DIFF V PKP setting

The conditions at flashover detection are:

- 52a status = 0
- VAg or Vag greater or lesser than the BRK 1 FLSHOVR V PKP setting
- IA is greater than the BRK 1 FLSHOVR AMP PKP setting
- DVA is less than the BRK 1 FLSHOVR DIFF V PKP setting

NOTE

The element is operational only when phase-to-ground voltages are connected to relay terminals. The flashover element will not operate if delta voltages are applied.

The breaker flashover settings are described below.

- **BRK 1 FLSHOVR SIDE 1 SRC**: This setting specifies a signal source used to provide three-phase voltages and three-phase currents from one side of the current breaker. The source selected as a setting and must be configured with breaker phase voltages and currents, even if only three VTs are available across the breaker.
- **BRK 1 FLSHOVR SIDE 2 SRC**: This setting specifies a signal source used to provide another set of three phase voltages whenever six VTs are available across the breaker. For a three-VT application, set this setting to "None."
- **BRK 1 STATUS CLSD A** to **BRK 1 STATUS CLSD C**: These settings specify FlexLogic operands to indicate the closed status of the breaker. A separate FlexLogic operand can be selected to detect individual breaker pole status and provide flashover detection. The recommended setting is 52a breaker contact or another operand defining the breaker poles closed status.

  NOTE

  Leaving this setting off, meaning not configuring any FlexLogic to indicated Closed Breaker leads to maloperation of the element.

- **BRK 1 FLSHOVR V PKP**: This setting specifies a pickup level for the phase voltages from one or both sides of the breaker. If six VTs are available, opening the breaker leads to two possible combinations – live voltages from only one side of the breaker, or live voltages from both sides of the breaker. The detection of voltage above the selected value on either side of the breaker sets the scheme ready for flashover detection. Set **BRK FLSHOVR V PKP** to 85 to 90% of the nominal voltage.
- **BRK 1 FLSHOVR DIFF V PKP**: This setting specifies a pickup level for the phase voltage difference when two VTs per phase are available across the breaker. Set this setting to be lower than the monitored voltage difference that is observed when closed or opened breaker resistors are left in service. The setting is selected as primary volts difference between the sources.

- **BRK 1 FLSHOVR AMP PKP**: This setting specifies the normal load current which can flow through the breaker. Depending on the flashover protection application, the flashover current can vary from levels of the charging current when the line is not loaded to well above the maximum line (feeder) load (line/feeder connected to load).
- **BRK 1 FLSHOVR SPV A** to **BRK 1 FLSHOVR SPV C**: These settings specify FlexLogic operands (per breaker pole) that supervise the operation of the element per phase. Supervision can be provided by operation of other protection elements, breaker failure, and close and trip commands. A six-cycle time delay applies after the selected FlexLogic operand resets.
- **BRK FLSHOVR PKP DELAY**: This setting specifies the time delay to operate after a pickup condition is detected. Do not set it too long else the flashover current can disappear before its detection.

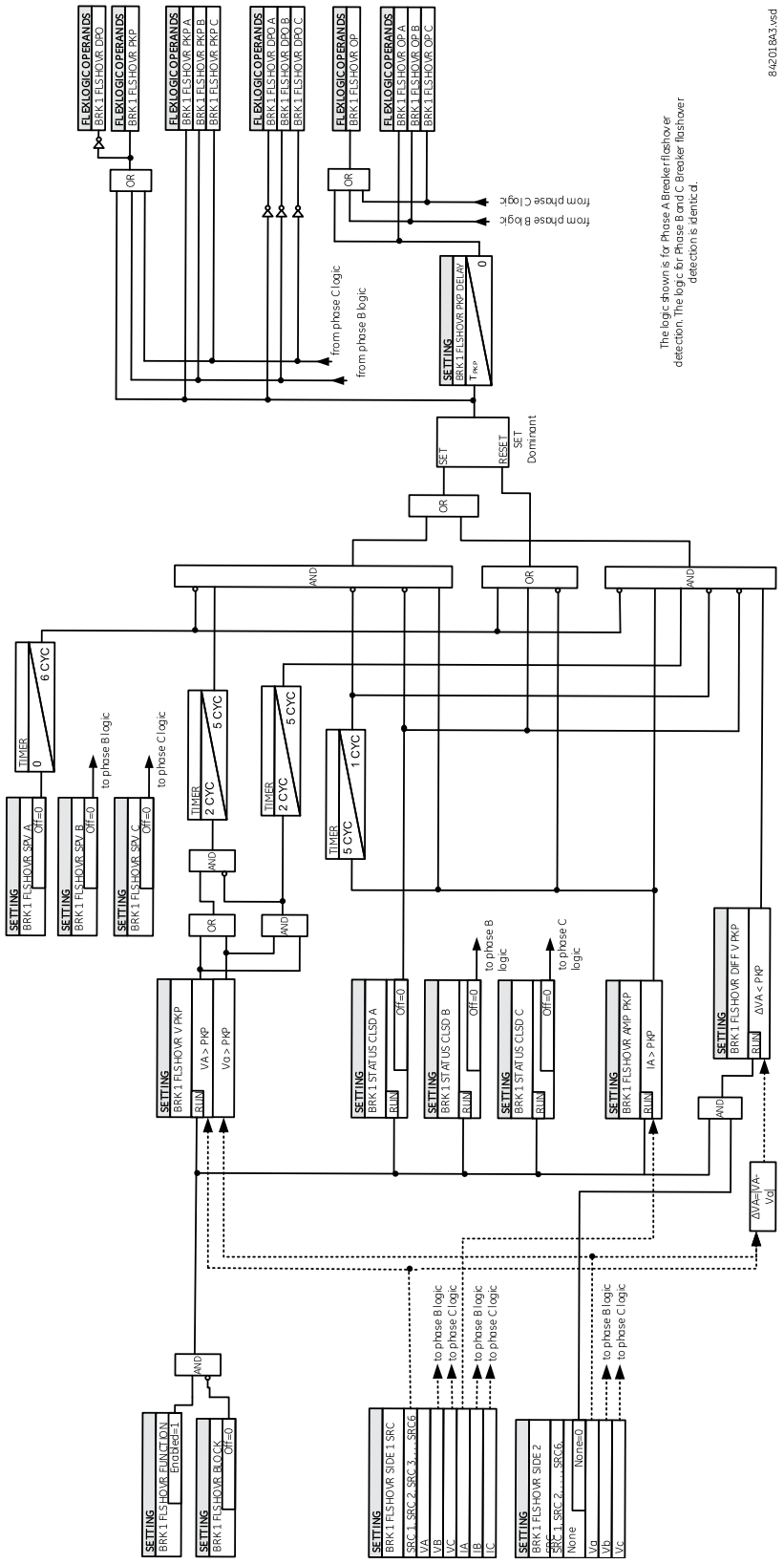

Figure 5–155: BREAKER FLASHOVER SCHEME LOGIC

c) CT FAILURE DETECTOR

PATH: SETTINGS ⇨⇩ CONTROL ELEMENTS ⇨⇩ MONITORING ELEMENTS ⇨⇩ CT FAILURE DETECTOR 1(4)

■ CT FAILURE ■ DETECTOR 1		CT FAIL 1 FUNCTION: Disabled	*Range: Disabled, Enabled*
	MESSAGE	CT FAIL 1 BLOCK: Off	*Range: FlexLogic operand*
	MESSAGE	CT FAIL 1 3I0 INP 1: SRC 1	*Range: SRC 1, SRC 2, SRC 3, SRC 4*
	MESSAGE	CT FAIL 1 3I0 INP 1 PKP: 0.2 pu	*Range: 0.0 to 2.0 pu in steps of 0.1*
	MESSAGE	CT FAIL 1 3I0 INP 2: SRC 2	*Range: SRC 1, SRC 2, SRC 3, SRC 4*
	MESSAGE	CT FAIL 1 3I0 INP 2 PKP: 0.2 pu	*Range: 0.0 to 2.0 pu in steps of 0.1*
	MESSAGE	CT FAIL 1 3V0 INPUT: SRC 1	*Range: SRC 1, SRC 2, SRC 3, SRC 4*
	MESSAGE	CT FAIL 1 3V0 INPUT PKP: 0.20 pu	*Range: 0.00 to 2.00 pu in steps of 0.01*
	MESSAGE	CT FAIL 1 PICKUP DELAY: 1.000 s	*Range: 0.000 to 65.535 s in steps of 0.001*
	MESSAGE	CT FAIL 1 TARGET: Self-reset	*Range: Self-reset, Latched, Disabled*
	MESSAGE	CT FAIL 1 EVENTS: Disabled	*Range: Disabled, Enabled*

The CT failure function is designed to detect problems with system current transformers used to supply current to the relay. This logic detects the presence of a zero-sequence current at the supervised source of current without a simultaneous zero-sequence current at another source, zero-sequence voltage, or some protection element condition.

The CT failure logic (see below) is based on the presence of the zero-sequence current in the supervised CT source and the absence of one of three or all of the three following conditions.

1. Zero-sequence current at different source current (may be different set of CTs or different CT core of the same CT).
2. Zero-sequence voltage at the assigned source.
3. Appropriate protection element or remote signal.

The CT failure settings are described below.

- **CT FAIL 1 FUNCTION:** This setting enables or disables operation of the CT failure element.
- **CT FAIL 1 BLOCK:** This setting selects a FlexLogic operand to block operation of the element during some condition (for example, an open pole in process of the single pole tripping-reclosing) when CT fail should be blocked. Local signals or remote signals representing operation of some remote current protection elements via communication channels can also be chosen.
- **CT FAIL 1 3I0 INPUT 1:** This setting selects the current source for input 1. The most critical protection element should also be assigned to the same source.
- **CT FAIL 1 3I0 INPUT 1 PICKUP:** This setting selects the 3I_0 pickup value for input 1 (the main supervised CT source).
- **CT FAIL 1 3I0 INPUT 2**: This setting selects the current source for input 2. Input 2 should use a different set of CTs or a different CT core of the same CT. If 3I_0 does not exist at source 2, then a CT failure is declared.
- **CT FAIL 1 3I0 INPUT 2 PICKUP**: This setting selects the 3I_0 pickup value for input 2 (different CT input) of the relay.

- **CT FAIL 1 3V0 INPUT:** This setting selects the voltage source.
- **CT FAIL 1 3V0 INPUT PICKUP:** This setting specifies the pickup value for the 3V_0 source.
- **CT FAIL 1 PICKUP DELAY:** This setting specifies the pickup delay of the CT failure element.

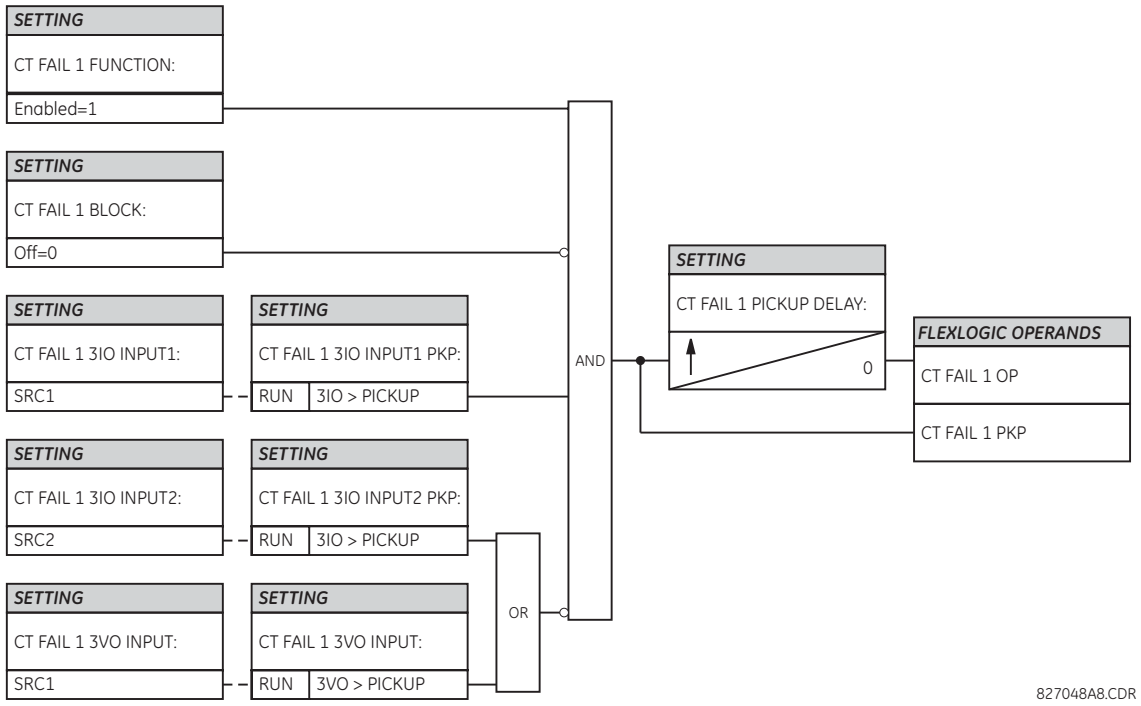

Figure 5–156: CT FAILURE DETECTOR SCHEME LOGIC

d) VT FUSE FAILURE

PATH: SETTINGS ⇨⇩ CONTROL ELEMENTS ⇨⇩ MONITORING ELEMENTS ⇨⇩ VT FUSE FAILURE 1(4)

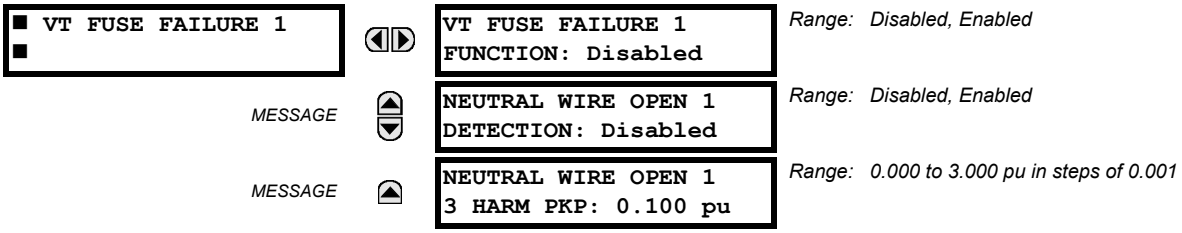

Every signal source includes a fuse failure scheme. A signal source must have a three-phase VT bank and a three-phase CT bank assigned to it, in order for the fuse failure scheme to operate.

The VT fuse failure detector can be used to raise an alarm and/or block elements that may operate incorrectly for a full or partial loss of AC potential caused by one or more blown fuses. Some elements that might be blocked (via the BLOCK input) are distance, voltage restrained overcurrent, and directional current.

There are two classes of fuse failure that occur:

- Class A: loss of one or two phases.
- Class B: loss of all three phases.

Different means of detection are required for each class. An indication of class A failures is a significant level of negative-sequence voltage, whereas an indication of class B failures is when positive sequence current is present and there is an insignificant amount of positive sequence voltage. Also rapid decrease in the phase voltages magnitude from a healthy

voltage level without disturbance in current can indicate a VT fuse fail conditions. These noted indications of fuse failure can also be present when faults are present on the system, so a means of detecting faults and inhibiting fuse failure declarations during these events is provided.

Once the fuse failure condition is declared, it is sealed-in until the cause that generated it disappears.

An additional condition is introduced to inhibit a fuse failure declaration when the monitored circuit is de-energized; positive-sequence voltage and current are both below threshold levels.

The **VT FUSE FAILURE 1 FUNCTION** setting enables and disables the fuse failure feature for Source 1 VT Fuse Fail.

The **VT NEU WIRE OPEN 1 FUNCTION** setting enables and disables the VT neutral wire open detection function. When the VT is connected in Delta, do not enabled this function because there is no neutral wire for Delta connected VT.

The **VT NEU WIRE OPEN 1 3 HRAM PKP** setting specifies the pickup level of 3rd harmonic of 3V0 signal for the **VT NEU WIRE OPEN** detection logic to pick up.

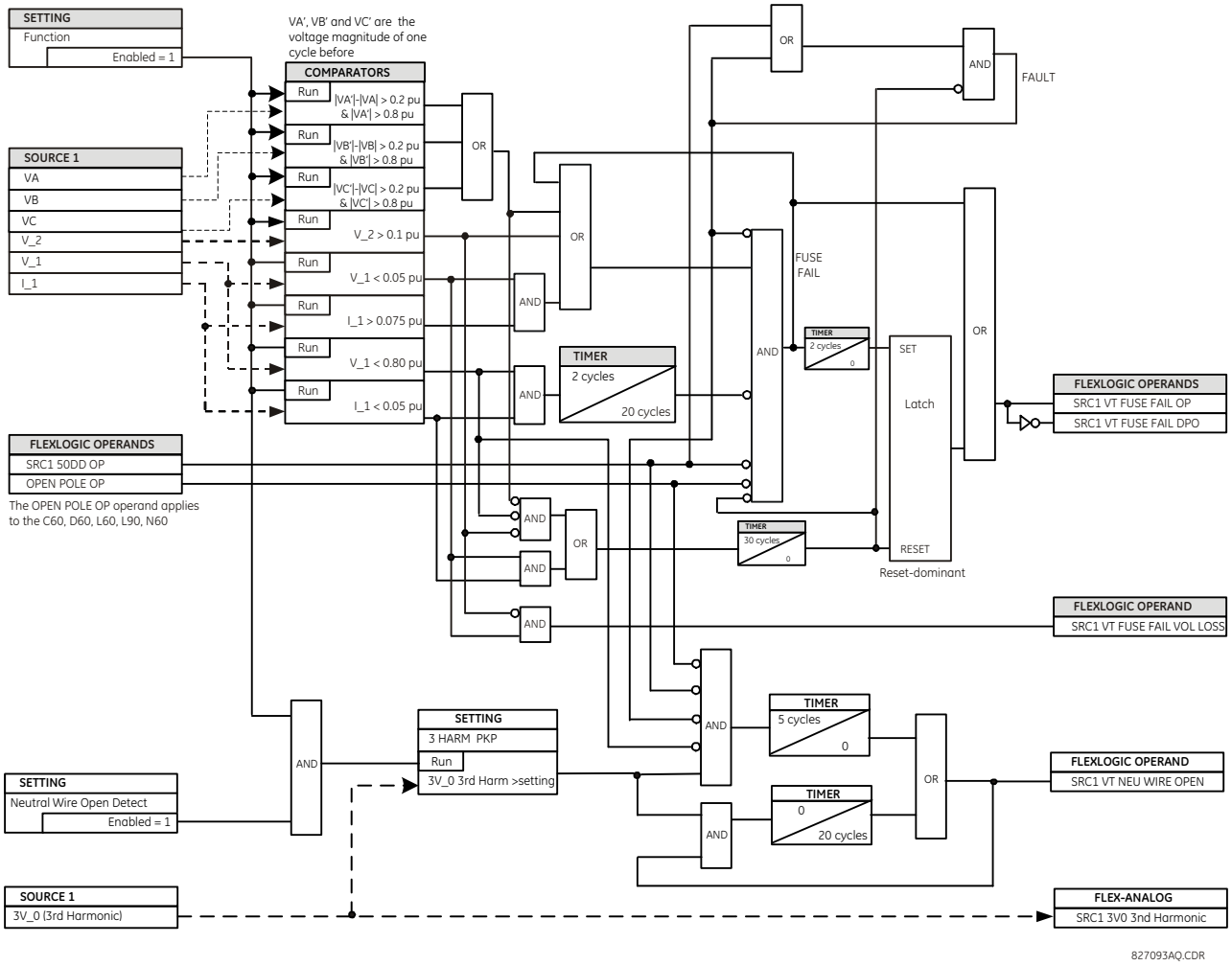

Figure 5–157: VT FUSE FAIL SCHEME LOGIC

Base voltage for this element is **PHASE VT SECONDARY** setting in the case of WYE VTs and (**PHASE VT SECONDARY**)/ $\sqrt{3}$ in case of DELTA VTs.

e) THERMAL OVERLOAD PROTECTION (ANSI 49)

PATH: SETTINGS ⇨⇩ CONTROL ELEMENTS ⇨⇩ MONITORING ELEMENTS ⇨⇩ THERMAL OVERLOAD PROTECTION ⇨ THERMAL PROTECTION 1(2)

■ THERMAL ■ PROTECTION 1		THERMAL PROTECTION 1 FUNCTION: Disabled	Range: Disabled, Enabled
	MESSAGE	THERMAL PROTECTION 1 SOURCE: SRC1	Range: SRC 1, SRC 2, SRC 3, SRC 4
	MESSAGE	THERMAL PROTECTION 1 BASE CURR: 0.80 pu	Range: 0.20 to 3.00 pu in steps of 0.01
	MESSAGE	THERMAL PROTECTION 1 k FACTOR: 1.10	Range: 1.00 to 1.20 in steps of 0.05
	MESSAGE	THERM PROT 1 TRIP TIME CONST: 45 min	Range: 0 to 1000 minutes in steps of 1
	MESSAGE	THERM PROT 1 RESET TIME CONST: 45 min	Range: 0 to 1000 minutes in steps of 1
	MESSAGE	THERM PROT 1 MINIM RESET TIME: 20 min	Range: 0 to 1000 minutes in steps of 1
	MESSAGE	THERM PROT 1 RESET: Off	Range: FlexLogic operand
	MESSAGE	THERM PROT 1 BLOCK: Off	Range: FlexLogic operand
	MESSAGE	THERMAL PROTECTION 1 TARGET: Self-reset	Range: Self-reset, Latched, Disabled
	MESSAGE	THERMAL PROTECTION 1 EVENTS: Disabled	Range: Disabled, Enabled

The thermal overload protection element corresponds to the IEC 255-8 standard and is used to detect thermal overload conditions in protected power system elements. Choosing an appropriate time constant element can be used to protect different elements of the power system. The cold curve characteristic is applied when the estimated I_p current is less than 10% of the base current. If I_p current is greater or equal than 10% than the base current, then the hot curve characteristic is applied. I_p current is estimated with a fixed time constant for both cooling and heating that reaches to the final value in two seconds on a step change (either step up or step down) signal.

The IEC255-8 cold curve is defined as follows:

$$t_{op} = \tau_{op} \times \ln\left(\frac{I^2}{I^2 - (kI_B)^2}\right) \quad \textbf{(EQ 5.49)}$$

The IEC255-8 hot curve is defined as follows:

$$t_{op} = \tau_{op} \times \ln\left(\frac{I^2 - I_p^2}{I^2 - (kI_B)^2}\right) \quad \textbf{(EQ 5.50)}$$

In the above equations,

- t_{op} = time to operate
- τ_{op} = thermal protection trip time constant
- I = measured overload RMS current
- I_p = measured load RMS current before overload occurs
- k= IEC 255-8 k-factor applied to I_B, defining maximum permissible current above nominal current

- I_B = protected element base (nominal) current

To ensure element accuracy for high overcurrent conditions, the maximum value of I/(k x I_B) is limited to 8, even when realistically it is exceeding this value.

The reset time of the thermal overload protection element is also time delayed using following formula:

$$t_{rst} = \tau_{rst} \times \ln\left(\frac{(kI_B)^2}{\left|I^2 - (kI_B)^2\right|}\right) + T_{min} \quad \textbf{(EQ 5.51)}$$

In the above equation,

- τ_{rst} = thermal protection trip time constant
- T_{min} is a minimum reset time setting

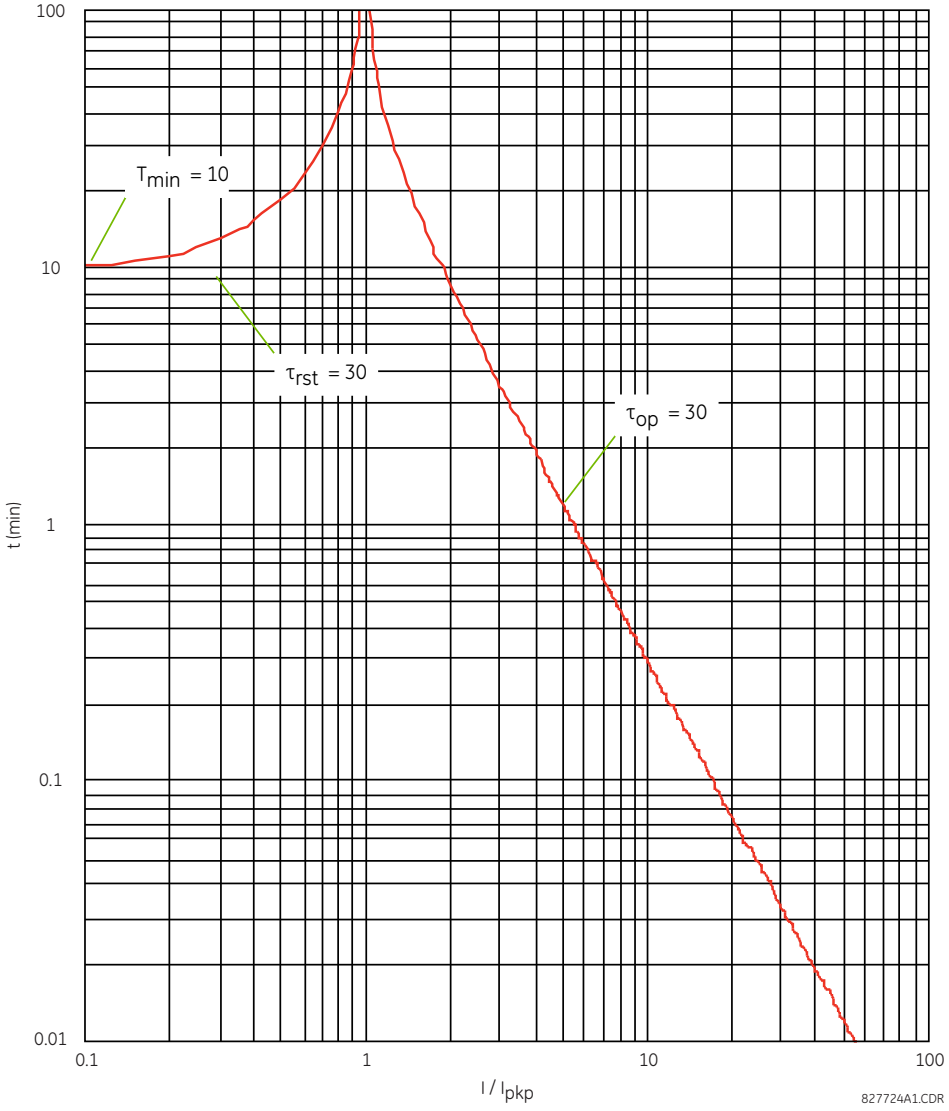

Figure 5–158: IEC 255-8 SAMPLE OPERATE AND RESET CURVES

The thermal overload protection element estimates accumulated thermal energy E using the following equations calculated each power cycle. When current is greater than the pickup level, $I_n > k \times I_B$, element starts increasing the thermal energy:

$$E_n = E_{n-1} + \frac{\Delta t}{t_{op(In)}} \quad \text{(EQ 5.52)}$$

When current is less than the dropout level, $I_n > 0.97 \times k \times I_B$, the element starts decreasing the thermal energy:

$$E_n = E_{n-1} - \frac{\Delta t}{t_{rst(In)}} \quad \text{(EQ 5.53)}$$

In the above equations,

- Δt is the power cycle duration
- n is the power cycle index
- $t_{op(In)}$ is the trip time calculated at index n as per the IEC255-8 cold curve or hot curve equations
- $t_{rst(In)}$ is the reset time calculated at index n as per the reset time equation
- I_n is the measured overload RMS current at index n
- E_n is the accumulated energy at index n
- E_{n-1} is the accumulated energy at index $n - 1$

The thermal overload protection element removes the THERMAL PROT 1 OP output operand when $E < 0.05$. In case of emergency, the thermal memory and THERMAL PROT 1 OP output operand can be reset using **THERM PROT 1 RESET** setting. All calculations are performed per phase. If the accumulated energy reaches value 1 in any phase, the thermal overload protection element operates and only resets when energy is less than 0.05 in all three phases.

5

Table 5–37: TYPICAL TIME CONSTANTS

PROTECTED EQUIPMENT	TIME CONSTANT	MINIMUM RESET TIME
Capacitor bank	10 minutes	30 minutes
Overhead line	10 minutes	20 minutes
Air-core reactor	40 minutes	30 minutes
Busbar	60 minutes	20 minutes
Underground cable	20 to 60 minutes	60 minutes

The logic for the thermal overload protection element is shown below.

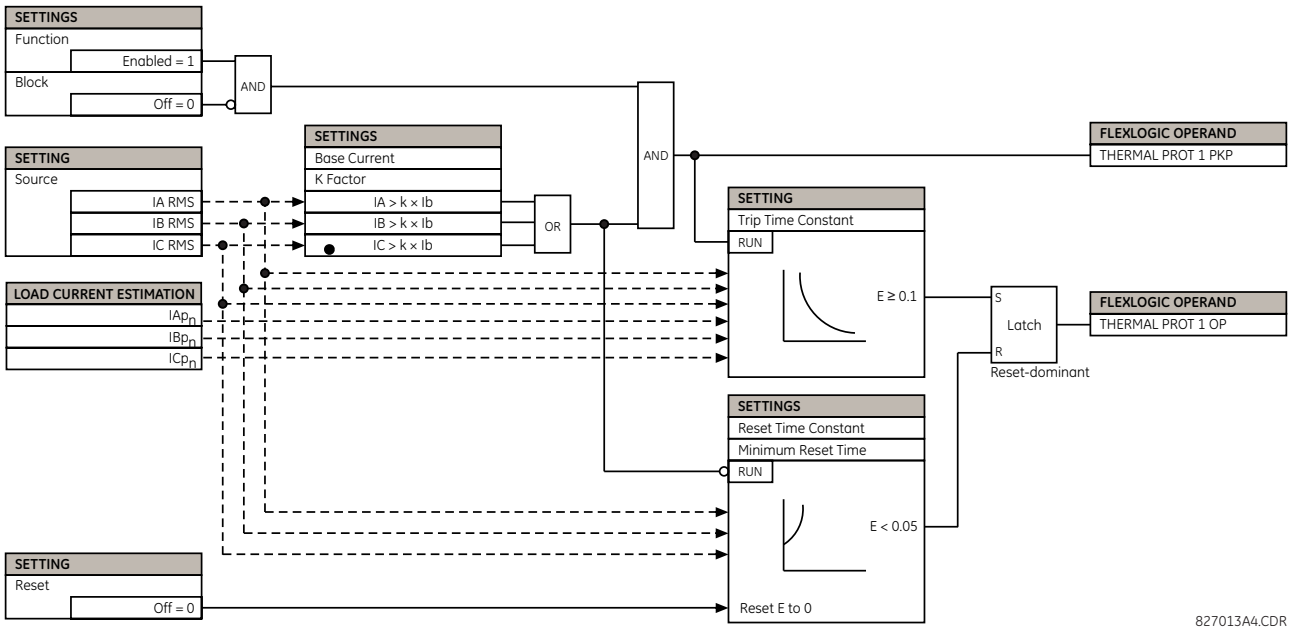

Figure 5–159: THERMAL OVERLOAD PROTECTION SCHEME LOGIC

PATH: SETTINGS ⇨⇩ INPUTS/OUTPUTS ⇨ CONTACT INPUTS

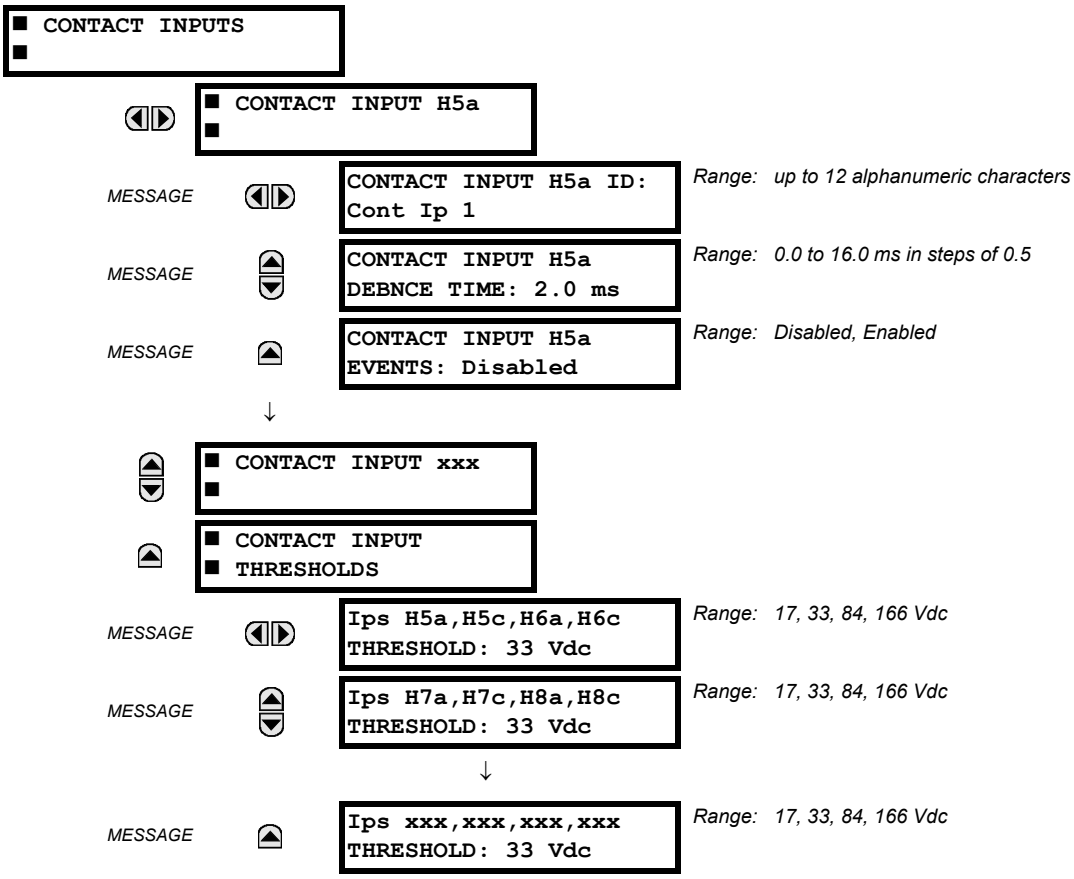

The contact inputs menu contains configuration settings for each contact input as well as voltage thresholds for each group of four contact inputs. Upon startup, the relay processor determines (from an assessment of the installed modules) which contact inputs are available and then display settings for only those inputs.

An alphanumeric ID may be assigned to a contact input for diagnostic, setting, and event recording purposes. The CONTACT IP X On" (Logic 1) FlexLogic operand corresponds to contact input "X" being closed, while CONTACT IP X Off corresponds to contact input "X" being open. The **CONTACT INPUT DEBNCE TIME** defines the time required for the contact to overcome 'contact bouncing' conditions. As this time differs for different contact types and manufacturers, set it as a maximum contact debounce time (per manufacturer specifications) plus some margin to ensure proper operation. If **CONTACT INPUT EVENTS** is set to "Enabled", every change in the contact input state will trigger an event.

A raw status is scanned for all Contact Inputs synchronously at the constant rate of 0.5 ms as shown in the figure below. The DC input voltage is compared to a user-settable threshold. A new contact input state must be maintained for a user-settable debounce time in order for the G60 to validate the new contact state. In the figure below, the debounce time is set at 2.5 ms; thus the 6th sample in a row validates the change of state (mark no. 1 in the diagram). Once validated (debounced), the contact input asserts a corresponding FlexLogic operand and logs an event as per user setting.

A time stamp of the first sample in the sequence that validates the new state is used when logging the change of the contact input into the Event Recorder (mark no. 2 in the diagram).

Protection and control elements, as well as FlexLogic equations and timers, are executed eight times in a power system cycle. The protection pass duration is controlled by the frequency tracking mechanism. The FlexLogic operand reflecting the debounced state of the contact is updated at the protection pass following the validation (marks no. 3 and 4 on the figure below). The update is performed at the beginning of the protection pass so all protection and control functions, as well as FlexLogic equations, are fed with the updated states of the contact inputs.

The FlexLogic operand response time to the contact input change is equal to the debounce time setting plus up to one protection pass (variable and depending on system frequency if frequency tracking enabled). If the change of state occurs just after a protection pass, the recognition is delayed until the subsequent protection pass; that is, by the entire duration of the protection pass. If the change occurs just prior to a protection pass, the state is recognized immediately. Statistically a delay of half the protection pass is expected. Owing to the 0.5 ms scan rate, the time resolution for the input contact is below 1msec.

For example, 8 protection passes per cycle on a 60 Hz system correspond to a protection pass every 2.1 ms. With a contact debounce time setting of 3.0 ms, the FlexLogic operand-assert time limits are: 3.0 + 0.0 = 3.0 ms and 3.0 + 2.1 = 5.1 ms. These time limits depend on how soon the protection pass runs after the debouncing time.

Regardless of the contact debounce time setting, the contact input event is time-stamped with a 1 μs accuracy using the time of the first scan corresponding to the new state (mark no. 2 below). Therefore, the time stamp reflects a change in the DC voltage across the contact input terminals that was not accidental as it was subsequently validated using the debounce timer. Keep in mind that the associated FlexLogic operand is asserted/de-asserted later, after validating the change.

The debounce algorithm is symmetrical: the same procedure and debounce time are used to filter the LOW-HIGH (marks no.1, 2, 3, and 4 in the figure below) and HIGH-LOW (marks no. 5, 6, 7, and 8 below) transitions.

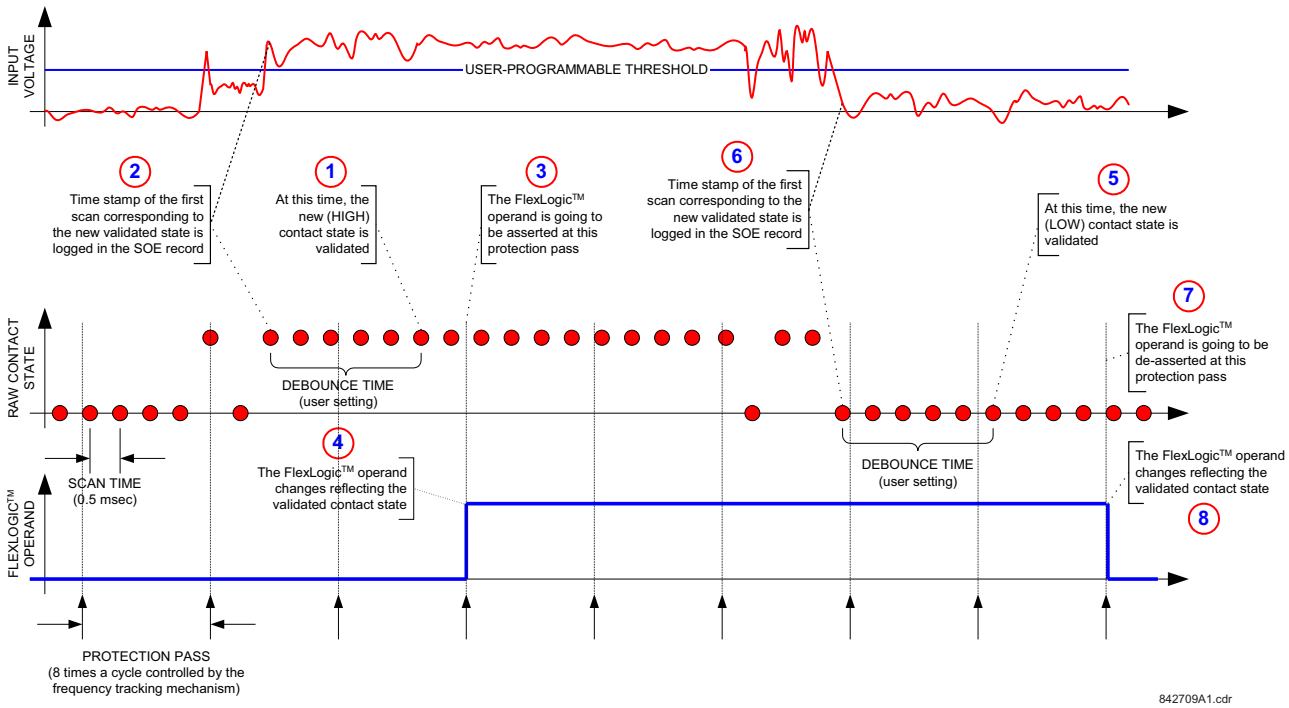

Figure 5–160: INPUT CONTACT DEBOUNCING MECHANISM AND TIME-STAMPING SAMPLE TIMING

Contact inputs are isolated in groups of four to allow connection of wet contacts from different voltage sources for each group. The **CONTACT INPUT THRESHOLDS** determine the minimum voltage required to detect a closed contact input. This value should be selected according to the following criteria: 17 for 24 V sources, 33 for 48 V sources, 84 for 110 to 125 V sources and 166 for 250 V sources.

For example, to use contact input H5a as a status input from the breaker 52b contact to seal-in the trip relay and record it in the Event Records menu, make the following settings changes:

CONTACT INPUT H5A ID: "Breaker Closed (52b)"
CONTACT INPUT H5A EVENTS: "Enabled"

Note that the 52b contact is closed when the breaker is open and open when the breaker is closed.

PATH: SETTINGS ⇨⇩ INPUTS/OUTPUTS ⇨⇩ VIRTUAL INPUTS ⇨ VIRTUAL INPUT 1(64)

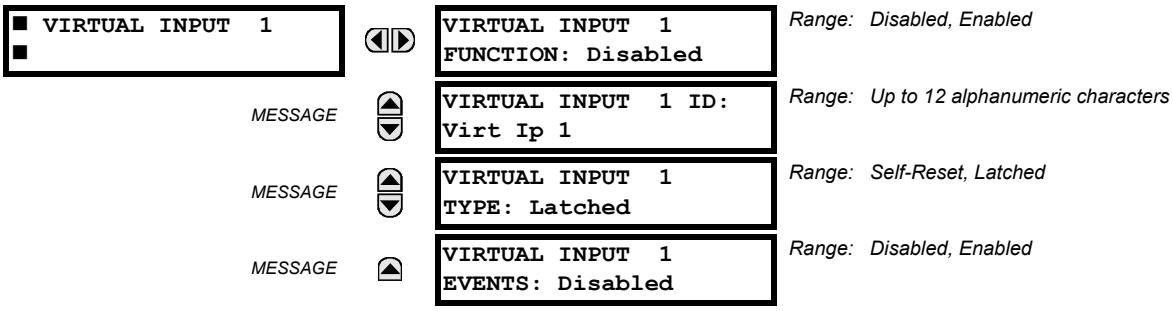

There are 64 virtual inputs that can be individually programmed to respond to input signals from the keypad (via the COMMANDS menu) and communications protocols. All virtual input operands are defaulted to "Off" (logic 0) unless the appropriate input signal is received.

If the **VIRTUAL INPUT x FUNCTION** is to "Disabled", the input will be forced to off (logic 0) regardless of any attempt to alter the input. If set to "Enabled", the input operates as shown on the logic diagram and generates output FlexLogic operands in response to received input signals and the applied settings.

There are two types of operation: self-reset and latched. If **VIRTUAL INPUT x TYPE** is "Self-Reset", when the input signal transits from off to on, the output operand will be set to on for only one evaluation of the FlexLogic equations and then return to off. If set to "Latched", the virtual input sets the state of the output operand to the same state as the most recent received input.

NOTE

The self-reset operating mode generates the output operand for a single evaluation of the FlexLogic equations. If the operand is to be used anywhere other than internally in a FlexLogic equation, it will likely have to be lengthened in time. A FlexLogic timer with a delayed reset can perform this function.

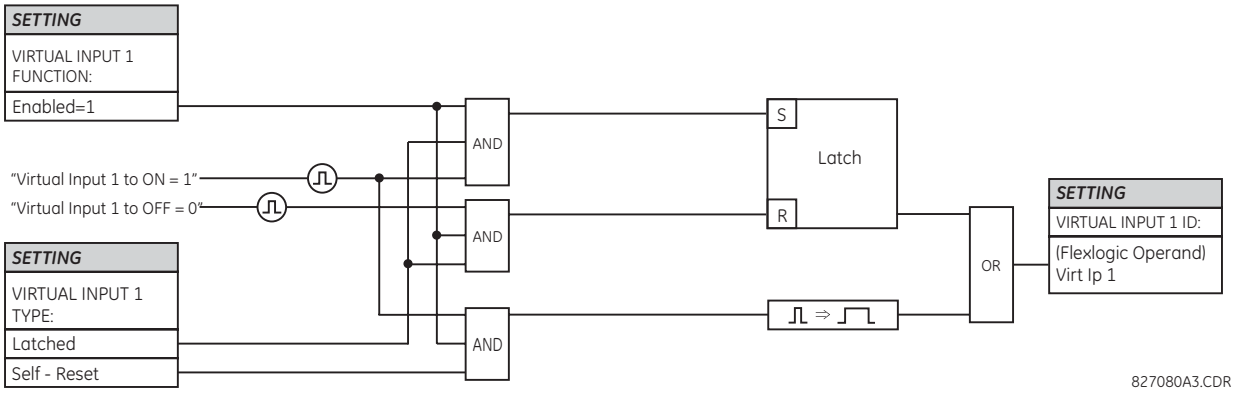

Figure 5–161: VIRTUAL INPUTS SCHEME LOGIC

a) DIGITAL OUTPUTS

PATH: SETTINGS ⇨⇩ INPUTS/OUTPUTS ⇨⇩ CONTACT OUTPUTS ⇨ CONTACT OUTPUT H1(H64)

```
■ CONTACT OUTPUT H1
■
```

```
CONTACT OUTPUT H1 ID
Cont Op 1
```

Range: Up to 12 alphanumeric characters

MESSAGE

```
OUTPUT H1 OPERATE:
Off
```

Range: FlexLogic operand

MESSAGE

```
OUTPUT H1 SEAL-IN:
Off
```

Range: FlexLogic operand

MESSAGE

```
CONTACT OUTPUT H1
EVENTS: Enabled
```

Range: Disabled, Enabled

Upon startup of the relay, the main processor determines from an assessment of the modules installed in the chassis which contact outputs are available and presents the settings for only these outputs. Where the contact input is non-latching, the settings are as shown.

An ID may be assigned to each contact output. The signal that can **OPERATE** a contact output may be any FlexLogic operand (virtual output, element state, contact input, or virtual input). An additional FlexLogic operand may be used to **SEAL-IN** the relay. Any change of state of a contact output can be logged as an Event if programmed to do so.

For example, the trip circuit current is monitored by providing a current threshold detector in series with some Form-A contacts (see the trip circuit example in the Digital Elements section). The monitor sets a flag (see the specifications for Form-A). The name of the FlexLogic operand set by the monitor, consists of the output relay designation, followed by the name of the flag; for example, CONT OP 1 ION.

In most breaker control circuits, the trip coil is connected in series with a breaker auxiliary contact used to interrupt current flow after the breaker has tripped, to prevent damage to the less robust initiating contact. This can be done by monitoring an auxiliary contact on the breaker which opens when the breaker has tripped, but this scheme is subject to incorrect operation caused by differences in timing between breaker auxiliary contact change-of-state and interruption of current in the trip circuit. The most dependable protection of the initiating contact is provided by directly measuring current in the tripping circuit, and using this parameter to control resetting of the initiating relay. This scheme is often called *trip seal-in*.

This can be realized using the CONT OP 1 ION FlexLogic operand to seal-in the contact output as follows:

CONTACT OUTPUT H1 ID: "Cont Op 1"
OUTPUT H1 OPERATE: *any suitable FlexLogic operand*
OUTPUT H1 SEAL-IN: "Cont Op 1 IOn"
CONTACT OUTPUT H1 EVENTS: "Enabled"

Figure 5–162: CONTACT INPUT/OUTPUT MODULE TYPE 6A CONTACT 1 LOGIC

b) LATCHING OUTPUTS

PATH: SETTINGS ⇨⇩ INPUTS/OUTPUTS ⇨⇩ CONTACT OUTPUTS ⇨ CONTACT OUTPUT H1a

```
■ CONTACT OUTPUT H1a
■
```

```
OUTPUT H1a ID
L-Cont Op 1
```

Range: Up to 12 alphanumeric characters

MESSAGE
OUTPUT H1a OPERATE: Off
Range: FlexLogic operand

MESSAGE
OUTPUT H1a RESET: Off
Range: FlexLogic operand

MESSAGE
OUTPUT H1a TYPE: Operate-dominant
Range: Operate-dominant, Reset-dominant

MESSAGE
OUTPUT H1a EVENTS: Disabled
Range: Disabled, Enabled

The latching output contacts are mechanically bi-stable and controlled by two separate (open and close) coils. As such they retain their position even if the relay is not powered up. The relay recognizes all latching output contact cards and populates the setting menu accordingly. On power up, the relay reads positions of the latching contacts from the hardware before executing any other functions of the relay (such as protection and control features or FlexLogic).

The latching output modules, either as a part of the relay or as individual modules, are shipped from the factory with all latching contacts opened. It is highly recommended to double-check the programming and positions of the latching contacts when replacing a module.

Since the relay asserts the output contact and reads back its position, it is possible to incorporate self-monitoring capabilities for the latching outputs. If any latching outputs exhibits a discrepancy, the **LATCHING OUTPUT ERROR** self-test error is declared. The error is signaled by the LATCHING OUT ERROR FlexLogic operand, event, and target message.

- **OUTPUT H1a OPERATE**: This setting specifies a FlexLogic operand to operate the 'close coil' of the contact. The relay will seal-in this input to safely close the contact. Once the contact is closed and the **RESET** input is logic 0 (off), any activity of the **OPERATE** input, such as subsequent chattering, will not have any effect. With both the **OPERATE** and **RESET** inputs active (logic 1), the response of the latching contact is specified by the **OUTPUT H1A TYPE** setting.
- **OUTPUT H1a RESET**: This setting specifies a FlexLogic operand to operate the 'trip coil' of the contact. The relay will seal-in this input to safely open the contact. Once the contact is opened and the **OPERATE** input is logic 0 (off), any activity of the **RESET** input, such as subsequent chattering, will not have any effect. With both the **OPERATE** and **RESET** inputs active (logic 1), the response of the latching contact is specified by the **OUTPUT H1A TYPE** setting.
- **OUTPUT H1a TYPE**: This setting specifies the contact response under conflicting control inputs; that is, when both the **OPERATE** and **RESET** signals are applied. With both control inputs applied simultaneously, the contact will close if set to "Operate-dominant" and will open if set to "Reset-dominant".

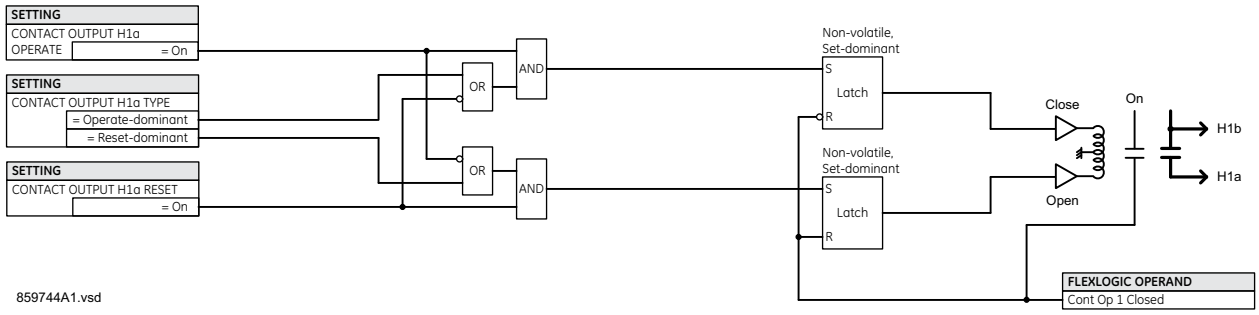

Figure 5–163: CONTACT INPUT/OUTPUT MODULE TYPE 4L CONTACT 1 LOGIC

Application Example 1:

A latching output contact H1a is to be controlled from two user-programmable pushbuttons (buttons number 1 and 2). The following settings should be applied.

Program the Latching Outputs by making the following changes in the **SETTINGS** ⇨⇩ **INPUTS/OUTPUTS** ⇨⇩ **CONTACT OUTPUTS** ⇨ **CONTACT OUTPUT H1a** menu (assuming an H4L module):

OUTPUT H1a OPERATE: "PUSHBUTTON 1 ON"
OUTPUT H1a RESET: "PUSHBUTTON 2 ON"

Program the pushbuttons by making the following changes in the **PRODUCT SETUP** ⇨⇩ **USER-PROGRAMMABLE PUSHBUTTONS** ⇨⇩ **USER PUSHBUTTON 1** and **USER PUSHBUTTON 2** menus:

PUSHBUTTON 1 FUNCTION: "Self-reset"
PUSHBTN 1 DROP-OUT TIME: "0.00 s"

PUSHBUTTON 2 FUNCTION: "Self-reset"
PUSHBTN 2 DROP-OUT TIME: "0.00 s"

Application Example 2:

A relay, having two latching contacts H1a and H1c, is to be programmed. The H1a contact is to be a Type-a contact, while the H1c contact is to be a Type-b contact (Type-a means closed after exercising the operate input; Type-b means closed after exercising the reset input). The relay is to be controlled from virtual outputs: VO1 to operate and VO2 to reset.

Program the Latching Outputs by making the following changes in the **SETTINGS** ⇨⇩ **INPUTS/OUTPUTS** ⇨⇩ **CONTACT OUTPUTS** ⇨ **CONTACT OUTPUT H1a** and **CONTACT OUTPUT H1c** menus (assuming an H4L module):

OUTPUT H1a OPERATE: "VO1"
OUTPUT H1a RESET: "VO2"

OUTPUT H1c OPERATE: "VO2"
OUTPUT H1c RESET: "VO1"

Since the two physical contacts in this example are mechanically separated and have individual control inputs, they will not operate at exactly the same time. A discrepancy in the range of a fraction of a maximum operating time may occur. Therefore, a pair of contacts programmed to be a multi-contact relay will not guarantee any specific sequence of operation (such as make before break). If required, the sequence of operation must be programmed explicitly by delaying some of the control inputs as shown in the next application example.

Application Example 3:

A make before break functionality must be added to the preceding example. An overlap of 20 ms is required to implement this functionality as described below:

Write the following FlexLogic equation (EnerVista UR Setup example shown):

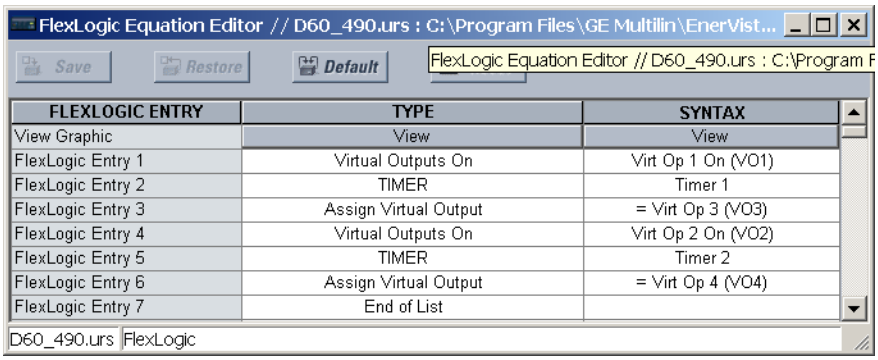

FLEXLOGIC ENTRY	TYPE	SYNTAX
View Graphic	View	View
FlexLogic Entry 1	Virtual Outputs On	Virt Op 1 On (VO1)
FlexLogic Entry 2	TIMER	Timer 1
FlexLogic Entry 3	Assign Virtual Output	= Virt Op 3 (VO3)
FlexLogic Entry 4	Virtual Outputs On	Virt Op 2 On (VO2)
FlexLogic Entry 5	TIMER	Timer 2
FlexLogic Entry 6	Assign Virtual Output	= Virt Op 4 (VO4)
FlexLogic Entry 7	End of List	

Both timers (Timer 1 and Timer 2) should be set to 20 ms pickup and 0 ms dropout.

Program the Latching Outputs by making the following changes in the **SETTINGS** ⇨⇩ **INPUTS/OUTPUTS** ⇨⇩ **CONTACT OUTPUTS** ⇨ **CONTACT OUTPUT H1a** and **CONTACT OUTPUT H1c** menus (assuming an H4L module):

OUTPUT H1a OPERATE: "VO1"
OUTPUT H1a RESET: "VO4"

OUTPUT H1c OPERATE: "VO2"
OUTPUT H1c RESET: "VO3"

Application Example 4:

A latching contact H1a is to be controlled from a single virtual output VO1. The contact should stay closed as long as VO1 is high, and should stay opened when VO1 is low. Program the relay as follows.

Write the following FlexLogic equation (EnerVista UR Setup example shown):

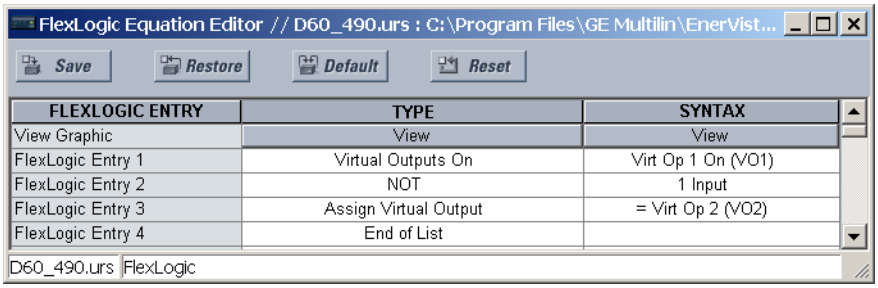

Program the Latching Outputs by making the following changes in the **SETTINGS ⇨⇩ INPUTS/OUTPUTS ⇨⇩ CONTACT OUTPUTS ⇨ CONTACT OUTPUT H1a** menu (assuming an H4L module):

OUTPUT H1a OPERATE: "VO1"
OUTPUT H1a RESET: "VO2"

5.8.4 VIRTUAL OUTPUTS

PATH: SETTINGS ⇨⇩ INPUTS/OUTPUTS ⇨⇩ VIRTUAL OUTPUTS ⇨ VIRTUAL OUTPUT 1(96)

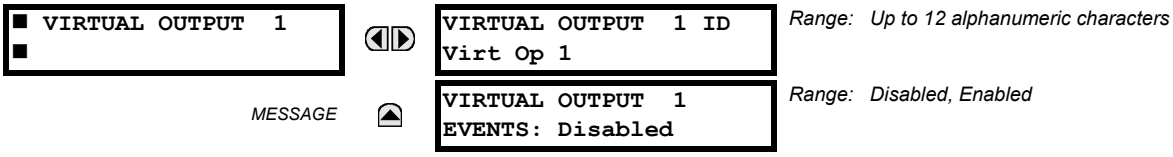

There are 96 virtual outputs that may be assigned via FlexLogic. If not assigned, the output will be forced to 'OFF' (Logic 0). An ID may be assigned to each virtual output. Virtual outputs are resolved in each pass through the evaluation of the FlexLogic equations. Any change of state of a virtual output can be logged as an event if programmed to do so.

For example, if Virtual Output 1 is the trip signal from FlexLogic and the trip relay is used to signal events, the settings would be programmed as follows:

VIRTUAL OUTPUT 1 ID: "Trip"
VIRTUAL OUTPUT 1 EVENTS: "Disabled"

5.8.5 REMOTE DEVICES

a) REMOTE INPUTS/OUTPUTS OVERVIEW

Remote inputs and outputs provide a means of exchanging digital state information between Ethernet-networked devices. The IEC 61850 GSSE (Generic Substation State Event) and GOOSE (Generic Object Oriented Substation Event) standards are used.

The sharing of digital point state information between GSSE/GOOSE equipped relays is essentially an extension to FlexLogic, allowing distributed FlexLogic by making operands available to/from devices on a common communications network. In addition to digital point states, GSSE/GOOSE messages identify the originator of the message and provide other information required by the communication specification. All devices listen to network messages and capture data only from messages that have originated in selected devices.

IEC 61850 GSSE messages are compatible with UCA GOOSE messages and contain a fixed set of digital points. IEC 61850 GOOSE messages can, in general, contain any configurable data items. When used by the remote input/output feature, IEC 61850 GOOSE messages contain the same data as GSSE messages.

Both GSSE and GOOSE messages are designed to be short, reliable, and high priority. GOOSE messages have additional advantages over GSSE messages due to their support of VLAN (virtual LAN) and Ethernet priority tagging functionality. The GSSE message structure contains space for 128 bit pairs representing digital point state information. The IEC 61850 specification provides 32 "DNA" bit pairs that represent the state of two pre-defined events and 30 user-defined events. All remaining bit pairs are "UserSt" bit pairs, which are status bits representing user-definable events. The G60 implementation provides 32 of the 96 available UserSt bit pairs.

The IEC 61850 specification includes features that are used to cope with the loss of communication between transmitting and receiving devices. Each transmitting device will send a GSSE/GOOSE message upon a successful power-up, when the state of any included point changes, or after a specified interval (the *default update* time) if a change-of-state has not occurred. The transmitting device also sends a 'hold time' which is set greater than four times the programmed default time required by the receiving device.

Receiving devices are constantly monitoring the communications network for messages they require, as recognized by the identification of the originating device carried in the message. Messages received from remote devices include the message *time allowed to live*. The receiving relay sets a timer assigned to the originating device to this time interval, and if it has not received another message from this device at time-out, the remote device is declared to be non-communicating, so it will use the programmed default state for all points from that specific remote device. If a message is received from a remote device before the *time allowed to live* expires, all points for that device are updated to the states contained in the message and the hold timer is restarted. The status of a remote device, where "Offline" indicates non-communicating, can be displayed.

The remote input/output facility provides for 32 remote inputs and 64 remote outputs.

b) LOCAL DEVICES: ID OF DEVICE FOR TRANSMITTING GSSE MESSAGES

In a G60 relay, the device ID that represents the IEC 61850 GOOSE application ID (GoID) name string sent as part of each GOOSE message is programmed in the **SETTINGS ⇨ PRODUCT SETUP ⇨⇩ COMMUNICATIONS ⇨⇩ IEC 61850 PROTOCOL ⇨ GSSE/GOOSE CONFIGURATION ⇨ TRANSMISSION ⇨⇩ FIXED GOOSE ⇨⇩ GOOSE ID** setting.

Likewise, the device ID that represents the IEC 61850 GSSE application ID name string sent as part of each GSSE message is programmed in the **SETTINGS ⇨ PRODUCT SETUP ⇨⇩ COMMUNICATIONS ⇨⇩ IEC 61850 PROTOCOL ⇨ GSSE/GOOSE CONFIGURATION ⇨ TRANSMISSION ⇨⇩ GSSE ⇨⇩ GSSE ID** setting.

In G60 releases previous to 5.0x, these name strings were represented by the **RELAY NAME** setting.

c) REMOTE DEVICES: ID OF DEVICE FOR RECEIVING GSSE/GOOSE MESSAGES

PATH: SETTINGS ⇨⇩ INPUTS/OUTPUTS ⇨⇩ REMOTE DEVICES ⇨ REMOTE DEVICE 1(16)

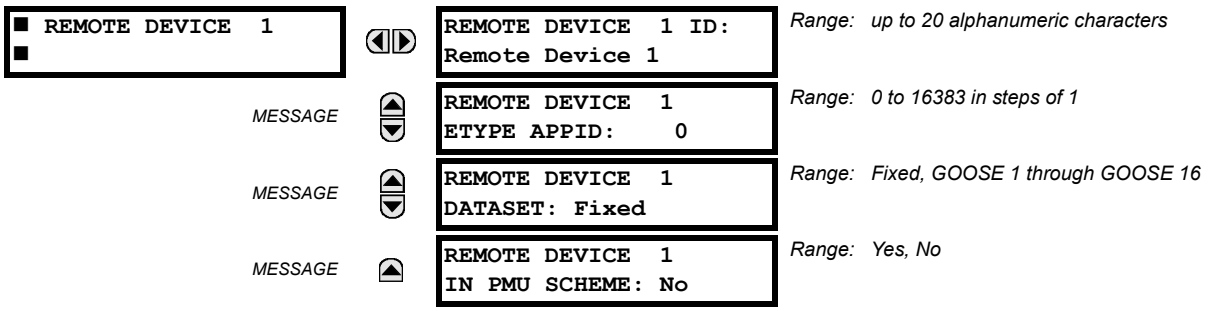

Remote devices are available for setting purposes. A receiving relay must be programmed to capture messages from only those originating remote devices of interest. This setting is used to select specific remote devices by entering (bottom row) the exact identification (ID) assigned to those devices.

The **REMOTE DEVICE 1 ETYPE APPID** setting is only used with GOOSE messages; they are not applicable to GSSE messages. This setting identifies the Ethernet application identification in the GOOSE message. It should match the corresponding settings on the sending device.

The **REMOTE DEVICE 1 DATASET** setting provides for the choice of the G60 fixed (DNA/UserSt) dataset (that is, containing DNA and UserSt bit pairs), or one of the configurable datasets.

Note that the dataset for the received data items must be made up of existing items in an existing logical node. For this reason, logical node GGIO3 is instantiated to hold the incoming data items. GGIO3 is not necessary to make use of the received data. The remote input data item mapping takes care of the mapping of the inputs to remote input FlexLogic operands. However, GGIO3 data can be read by IEC 61850 clients.

PATH: SETTINGS ⇨⇩ INPUTS/OUTPUTS ⇨⇩ REMOTE INPUTS ⇨ REMOTE INPUT 1(32)

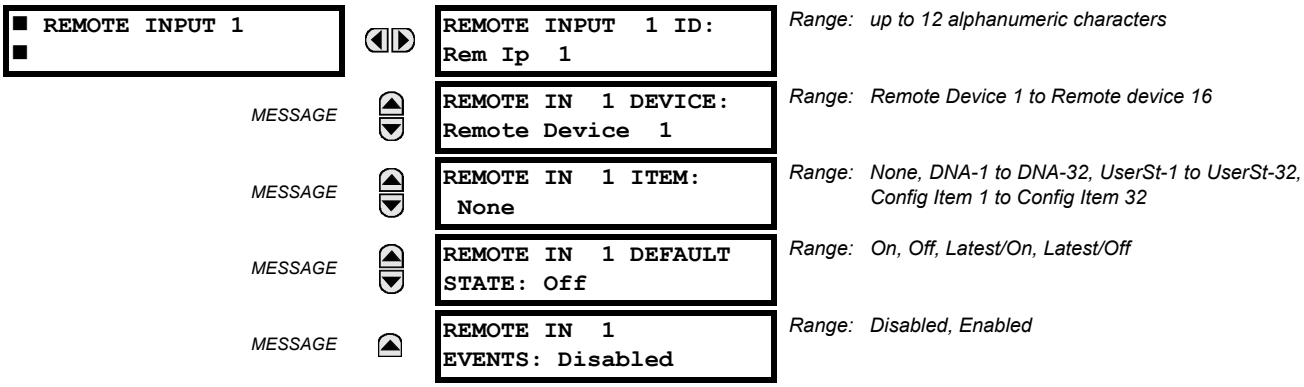

Remote Inputs that create FlexLogic operands at the receiving relay are extracted from GSSE/GOOSE messages originating in remote devices. Each remote input can be selected from a list consisting of: DNA-1 through DNA-32, UserSt-1 through UserSt-32, and Dataset Item 1 through Dataset Item 32. The function of DNA inputs is defined in the IEC 61850 specification and is presented in the IEC 61850 DNA Assignments table in the Remote Outputs section. The function of UserSt inputs is defined by the user selection of the FlexLogic operand whose state is represented in the GSSE/GOOSE message. A user must program a DNA point from the appropriate FlexLogic operand.

Remote input 1 must be programmed to replicate the logic state of a specific signal from a specific remote device for local use. This programming is performed via the three settings shown above.

The **REMOTE INPUT 1 ID** setting allows the user to assign descriptive text to the remote input. The **REMOTE IN 1 DEVICE** setting selects the remote device which originates the required signal, as previously assigned to the remote device via the setting **REMOTE DEVICE (16) ID** (see the Remote Devices section). The **REMOTE IN 1 ITEM** setting selects the specific bits of the GSSE/GOOSE message required.

The **REMOTE IN 1 DEFAULT STATE** setting selects the logic state for this point if the local relay has just completed startup or the remote device sending the point is declared to be non-communicating. The following choices are available:

- Setting **REMOTE IN 1 DEFAULT STATE** to “On” value defaults the input to logic 1.
- Setting **REMOTE IN 1 DEFAULT STATE** to “Off” value defaults the input to logic 0.
- Setting **REMOTE IN 1 DEFAULT STATE** to “Latest/On” freezes the input in case of lost communications. If the latest state is not known, such as after relay power-up but before the first communication exchange, the input will default to logic 1. When communication resumes, the input becomes fully operational.
- Setting **REMOTE IN 1 DEFAULT STATE** to “Latest/Off” freezes the input in case of lost communications. If the latest state is not known, such as after relay power-up but before the first communication exchange, the input will default to logic 0. When communication resumes, the input becomes fully operational.

NOTE For additional information on GSSE/GOOOSE messaging, see the Remote Devices section in this chapter.

5.8.7 REMOTE DOUBLE-POINT STATUS INPUTS

PATH: SETTINGS ⇨⇩ INPUTS/OUTPUTS ⇨⇩ REMOTE DPS INPUTS ⇨ REMOTE DPS INPUT 1(5)

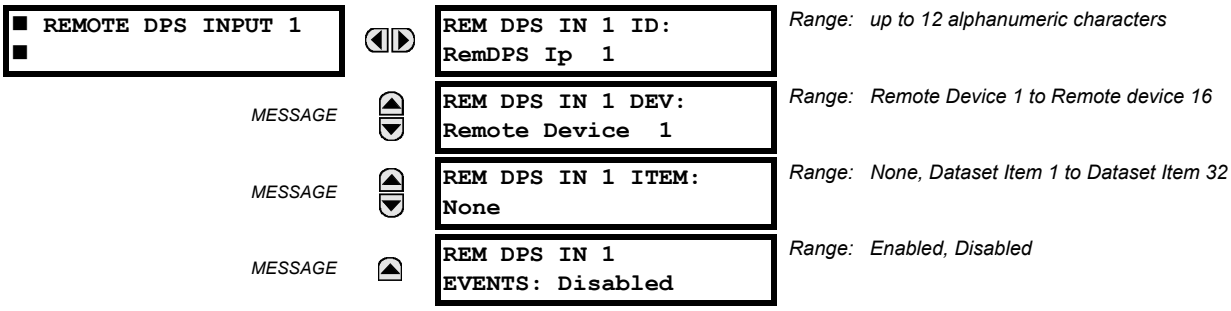

Remote double-point status inputs are extracted from GOOSE messages originating in the remote device. Each remote double point status input must be programmed to replicate the logic state of a specific signal from a specific remote device for local use. This functionality is accomplished with the five remote double-point status input settings.

- **REM DPS IN 1 ID**: This setting assigns descriptive text to the remote double-point status input.
- **REM DPS IN 1 DEV**: This setting selects a remote device ID to indicate the origin of a GOOSE message. The range is selected from the remote device IDs specified in the Remote Devices section.
- **REM DPS IN 1 ITEM**: This setting specifies the required bits of the GOOSE message.

The configurable GOOSE dataset items must be changed to accept a double-point status item from a GOOSE dataset (changes are made in the SETTINGS ⇨⇩ COMMUNICATION ⇨⇩ IEC 61850 PROTOCOL ⇨⇩ GSSE/GOOSE CONFIGURATION ⇨⇩ RECEPTION ⇨⇩ CONFIGURABLE GOOSE ⇨ CONFIGURABLE GOOSE 1(16) ⇨ CONFIG GSE 1 DATASET ITEMS menus). Dataset items configured to receive any of "GGIO3.ST.IndPos1.stV" to "GGIO3.ST.IndPos5.stV" will accept double-point status information that will be decoded by the remote double-point status inputs configured to this dataset item.

The remote double point status is recovered from the received IEC 61850 dataset and is available as through the RemDPS Ip 1 BAD, RemDPS Ip 1 INTERM, RemDPS Ip 1 OFF, and RemDPS Ip 1 ON FlexLogic operands. These operands can then be used in breaker or disconnect control schemes.

5.8.8 REMOTE OUTPUTS

a) DNA BIT PAIRS

PATH: SETTINGS ⇨⇩ INPUTS/OUTPUTS ⇨⇩ REMOTE OUTPUTS DNA BIT PAIRS ⇨ REMOTE OUTPUTS DNA- 1(32) BIT PAIR

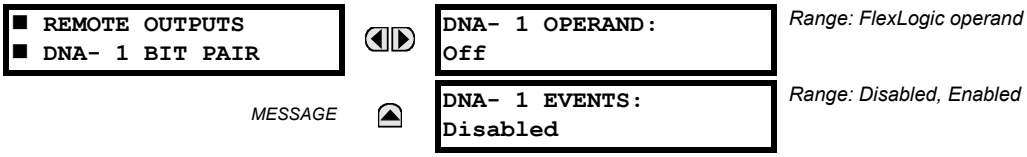

Remote outputs (1 to 32) are FlexLogic operands inserted into GSSE/GOOSE messages that are transmitted to remote devices on a LAN. Each digital point in the message must be programmed to carry the state of a specific FlexLogic operand. The above operand setting represents a specific DNA function (as shown in the following table) to be transmitted.

Table 5–38: IEC 61850 DNA ASSIGNMENTS

DNA	IEC 61850 DEFINITION	FLEXLOGIC OPERAND
1	Test	IEC 61850 TEST MODE
2	ConfRev	IEC 61850 CONF REV

b) USERST BIT PAIRS

PATH: SETTINGS ⇨⇩ INPUTS/OUTPUTS ⇨⇩ REMOTE OUTPUTS UserSt BIT PAIRS ⇨ REMOTE OUTPUTS UserSt- 1(32) BIT PAIR

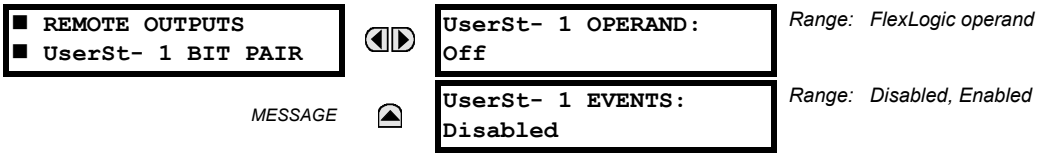

Remote outputs 1 to 32 originate as GSSE/GOOSE messages to be transmitted to remote devices. Each digital point in the message must be programmed to carry the state of a specific FlexLogic operand. The setting above is used to select the operand which represents a specific UserSt function (as selected by the user) to be transmitted.

NOTE For more information on GSSE/GOOSE messaging, see the Remote Inputs/Outputs Overview in the *Remote Devices* section.

5.8.9 RESETTING

PATH: SETTINGS ⇨⇩ INPUTS/OUTPUTS ⇨⇩ RESETTING

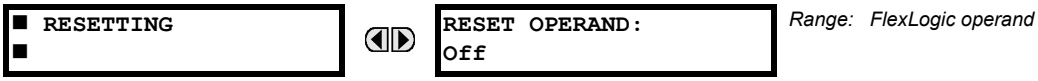

Some events can be programmed to latch the faceplate LED event indicators, target message, and/or graphical panel annunciator windows. Once set, the latching mechanism holds all of the latched indicators or messages in the set state after the initiating condition has cleared until a RESET command is received to return these latches (not including FlexLogic latches) to the reset state where the initiating condition has cleared. The RESET command can be sent from the faceplate Reset button, a remote device via a communications channel, or any selected operand.

The three sources of RESET commands each activates the RESET OP FlexLogic operand. Each individual source of a RESET command also creates its individual operand RESET OP (PUSHBUTTON), RESET OP (COMMS), or RESET OP (OPERAND) to identify the source of the command. Each of these three operands generates an event in the event record when activated. The setting shown above selects the operand that activates the RESET OP (OPERAND) operand.

5.8.10 DIRECT INPUTS AND OUTPUTS

a) DIRECT INPUTS

PATH: SETTINGS ⇨⇩ INPUTS/OUTPUTS ⇨⇩ DIRECT INPUTS ⇨ DIRECT INPUT 1(32)

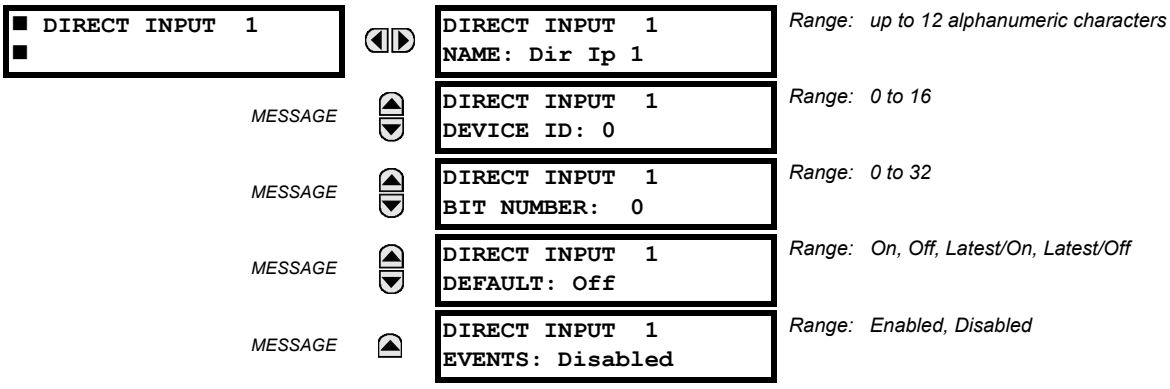

These settings specify how the direct input information is processed. The **DIRECT INPUT 1 NAME** setting allows the user to assign a descriptive name to the direct input. The **DIRECT INPUT 1 DEVICE ID** represents the source of direct input 1. The specified direct input is driven by the device identified here.

The **DIRECT INPUT 1 BIT NUMBER** is the bit number to extract the state for direct input 1. Direct Input 1 is driven by the bit identified as **DIRECT INPUT 1 BIT NUMBER**. This corresponds to the direct output number of the sending device.

DIRECT INPUT 1 DEFAULT represents the state of the direct input when the associated direct device is offline. The following choices are available:

- Setting **DIRECT INPUT 1 DEFAULT** to "On" value defaults the input to Logic 1.
- Setting **DIRECT INPUT 1 DEFAULT** to "Off" value defaults the input to Logic 0.
- Setting **DIRECT INPUT 1 DEFAULT** to "Latest/On" freezes the input in case of lost communications. If the latest state is not known, such as after relay power-up but before the first communication exchange, the input will default to Logic 1. When communication resumes, the input becomes fully operational.
- Setting **DIRECT INPUT 1 DEFAULT** to "Latest/Off" freezes the input in case of lost communications. If the latest state is not known, such as after relay power-up but before the first communication exchange, the input will default to Logic 0. When communication resumes, the input becomes fully operational.

b) DIRECT OUTPUTS

PATH: SETTINGS ⇨⇩ INPUTS/OUTPUTS ⇨⇩ DIRECT OUTPUTS ⇨ DIRECT OUTPUT 1(32)

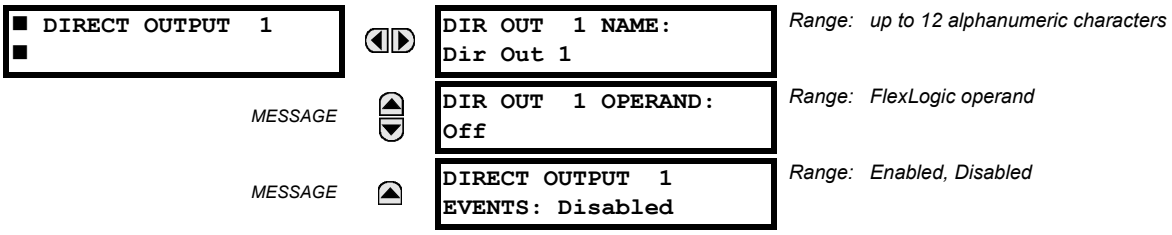

The **DIR OUT 1 NAME** setting allows the user to assign a descriptive name to the direct output. The **DIR OUT 1 OPERAND** is the FlexLogic operand that determines the state of this direct output.

5

c) APPLICATION EXAMPLES

The examples introduced in the earlier Direct Inputs and Outputs section (part of the Product Setup section) are continued below to illustrate usage of the direct inputs and outputs.

EXAMPLE 1: EXTENDING INPUT/OUTPUT CAPABILITIES OF A G60 RELAY

Consider an application that requires additional quantities of contact inputs or output contacts or lines of programmable logic that exceed the capabilities of a single UR-series chassis. The problem is solved by adding an extra UR-series IED, such as the C30, to satisfy the additional inputs/outputs and programmable logic requirements. The two IEDs are connected via single-channel digital communication cards as shown below.

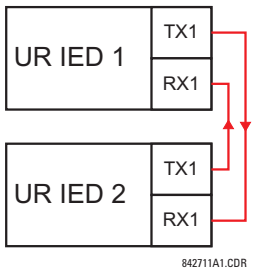

Figure 5–164: INPUT AND OUTPUT EXTENSION VIA DIRECT INPUTS AND OUTPUTS

Assume contact input 1 from UR IED 2 is to be used by UR IED 1. The following settings should be applied (Direct Input 5 and bit number 12 are used, as an example):

UR IED 1: **DIRECT INPUT 5 DEVICE ID** = "2"
DIRECT INPUT 5 BIT NUMBER = "12"

UR IED 2: **DIRECT OUT 12 OPERAND** = "Cont Ip 1 On"

The Cont Ip 1 On operand of UR IED 2 is now available in UR IED 1 as DIRECT INPUT 5 ON.

EXAMPLE 2: INTERLOCKING BUSBAR PROTECTION

A simple interlocking busbar protection scheme can be accomplished by sending a blocking signal from downstream devices, say 2, 3 and 4, to the upstream device that monitors a single incomer of the busbar, as shown in the figure below.

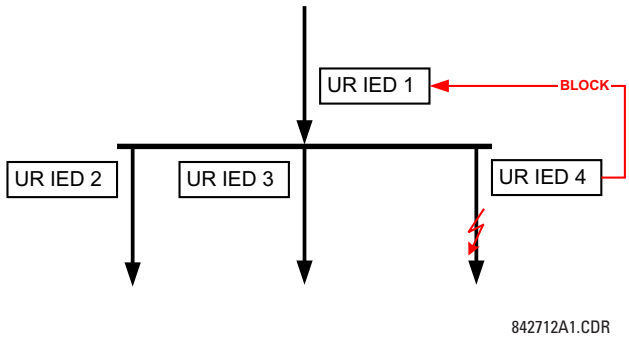

Figure 5–165: SAMPLE INTERLOCKING BUSBAR PROTECTION SCHEME

Assume that Phase Instantaneous Overcurrent 1 is used by Devices 2, 3, and 4 to block Device 1. If not blocked, Device 1 would trip the bus upon detecting a fault and applying a short coordination time delay.

The following settings should be applied (assume Bit 3 is used by all 3 devices to send the blocking signal and Direct Inputs 7, 8, and 9 are used by the receiving device to monitor the three blocking signals):

UR IED 2: **DIRECT OUT 3 OPERAND**: "PHASE IOC1 OP"

UR IED 3: **DIRECT OUT 3 OPERAND**: "PHASE IOC1 OP"

UR IED 4: **DIRECT OUT 3 OPERAND**: "PHASE IOC1 OP"

UR IED 1: **DIRECT INPUT 7 DEVICE ID**: "2"
DIRECT INPUT 7 BIT NUMBER: "3"
DIRECT INPUT 7 DEFAULT STATE: select "On" for security, select "Off" for dependability

DIRECT INPUT 8 DEVICE ID: "3"
DIRECT INPUT 8 BIT NUMBER: "3"
DIRECT INPUT 8 DEFAULT STATE: select "On" for security, select "Off" for dependability

DIRECT INPUT 9 DEVICE ID: "4"
DIRECT INPUT 9 BIT NUMBER: "3"
DIRECT INPUT 9 DEFAULT STATE: select "On" for security, select "Off" for dependability

Now the three blocking signals are available in UR IED 1 as DIRECT INPUT 7 ON, DIRECT INPUT 8 ON, and DIRECT INPUT 9 ON. Upon losing communications or a device, the scheme is inclined to block (if any default state is set to “On”), or to trip the bus on any overcurrent condition (all default states set to “Off”).

EXAMPLE 2: PILOT-AIDED SCHEMES

Consider a three-terminal line protection application shown in the figure below.

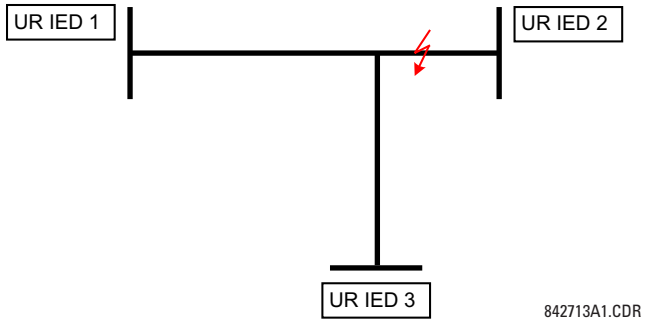

Figure 5–166: THREE-TERMINAL LINE APPLICATION

Assume the Hybrid Permissive Overreaching Transfer Trip (Hybrid POTT) scheme is applied using the architecture shown below. The scheme output operand HYB POTT TX1 is used to key the permission.

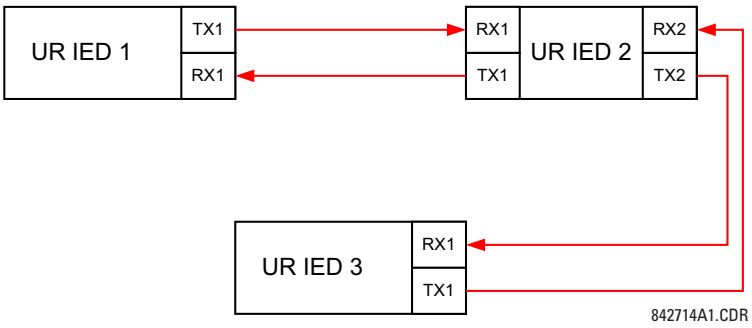

Figure 5–167: SINGLE-CHANNEL OPEN-LOOP CONFIGURATION

In the above architecture, Devices 1 and 3 do not communicate directly. Therefore, Device 2 must act as a 'bridge'. The following settings should be applied:

UR IED 1: **DIRECT OUT 2 OPERAND:** "HYB POTT TX1"
DIRECT INPUT 5 DEVICE ID: "2"
DIRECT INPUT 5 BIT NUMBER: "2" (this is a message from IED 2)
DIRECT INPUT 6 DEVICE ID: "2"
DIRECT INPUT 6 BIT NUMBER: "4" (effectively, this is a message from IED 3)

UR IED 3: **DIRECT OUT 2 OPERAND:** "HYB POTT TX1"
DIRECT INPUT 5 DEVICE ID: "2"
DIRECT INPUT 5 BIT NUMBER: "2" (this is a message from IED 2)
DIRECT INPUT 6 DEVICE ID: "2"
DIRECT INPUT 6 BIT NUMBER: "3" (effectively, this is a message from IED 1)

UR IED 2: **DIRECT INPUT 5 DEVICE ID:** "1"
DIRECT INPUT 5 BIT NUMBER: "2"
DIRECT INPUT 6 DEVICE ID: "3"
DIRECT INPUT 6 BIT NUMBER: "2"
DIRECT OUT 2 OPERAND: "HYB POTT TX1"
DIRECT OUT 3 OPERAND: "DIRECT INPUT 5" (forward a message from 1 to 3)
DIRECT OUT 4 OPERAND: "DIRECT INPUT 6" (forward a message from 3 to 1)

Signal flow between the three IEDs is shown in the figure below:

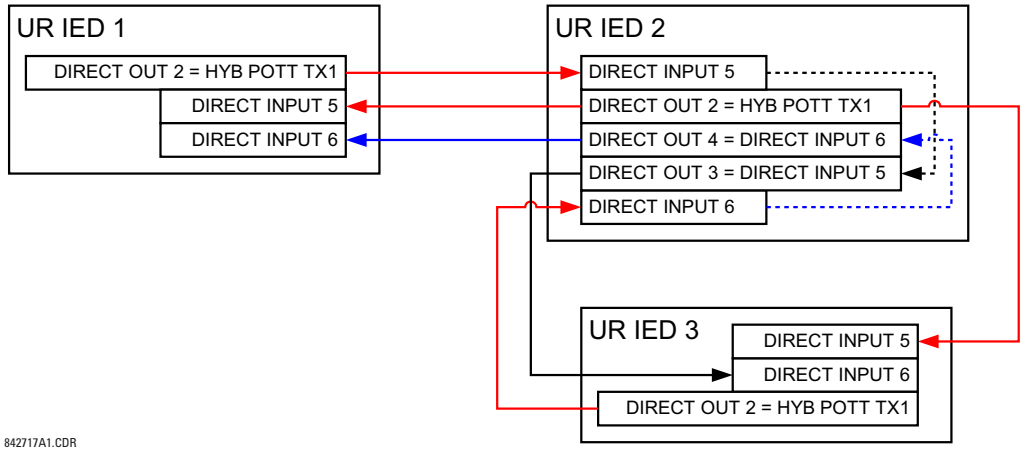

Figure 5–168: SIGNAL FLOW FOR DIRECT INPUT AND OUTPUT – EXAMPLE 3

In three-terminal applications, both the remote terminals must grant permission to trip. Therefore, at each terminal, direct inputs 5 and 6 should be ANDed in FlexLogic and the resulting operand configured as the permission to trip (**HYB POTT RX1** setting).

5.8.11 TELEPROTECTION INPUTS AND OUTPUTS

a) OVERVIEW

The relay provides 16 teleprotection inputs on communications channel 1 (numbered 1-1 through 1-16) and 16 teleprotection inputs on communications channel 2 (on two-terminals two-channel and three-terminal systems only, numbered 2-1 through 2-16). The remote relay connected to channels 1 and 2 of the local relay is programmed by assigning FlexLogic operands to be sent via the selected communications channel. This allows the user to create distributed protection and control schemes via dedicated communications channels. Some examples are directional comparison pilot schemes and direct transfer tripping. It should be noted that failures of communications channels will affect teleprotection functionality. The teleprotection function must be enabled to utilize the inputs.

b) TELEPROTECTION INPUTS

PATH: SETTINGS ⇨⇩ INPUTS/OUTPUTS ⇨⇩ TELEPROTECTION ⇨ TELEPROT INPUTS

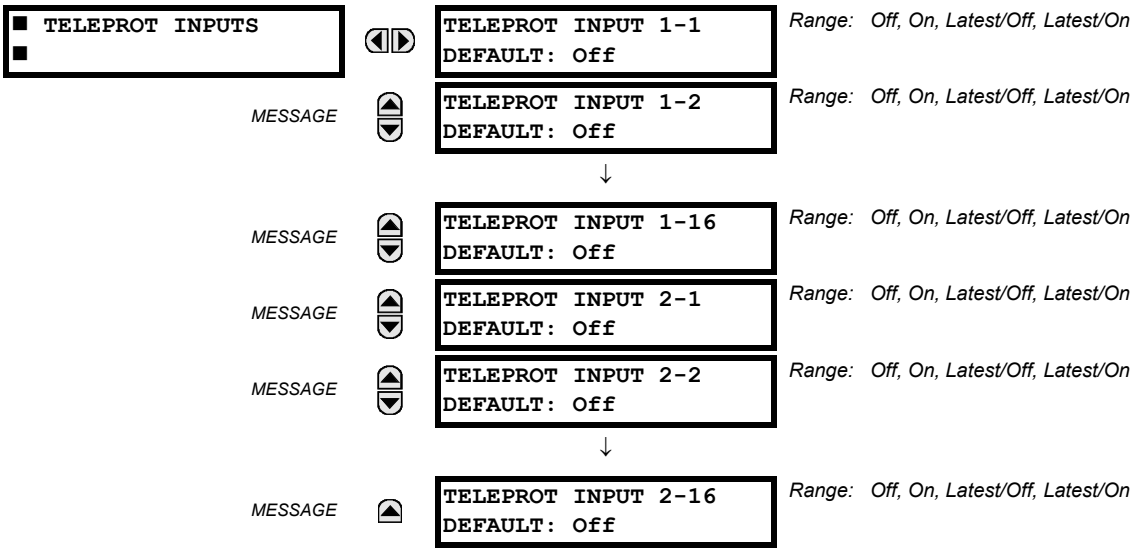

Setting the **TELEPROT INPUT ~~ DEFAULT** setting to "On" defaults the input to logic 1 when the channel fails. A value of "Off" defaults the input to logic 0 when the channel fails.

The "Latest/On" and "Latest/Off" values freeze the input in case of lost communications. If the latest state is not known, such as after relay power-up but before the first communication exchange, then the input defaults to logic 1 for "Latest/On" and logic 0 for "Latest/Off".

c) TELEPROTECTION OUTPUTS

PATH: SETTINGS ⇨⇩ INPUTS/OUTPUTS ⇨⇩ TELEPROTECTION ⇨⇩ TELEPROT OUTPUTS

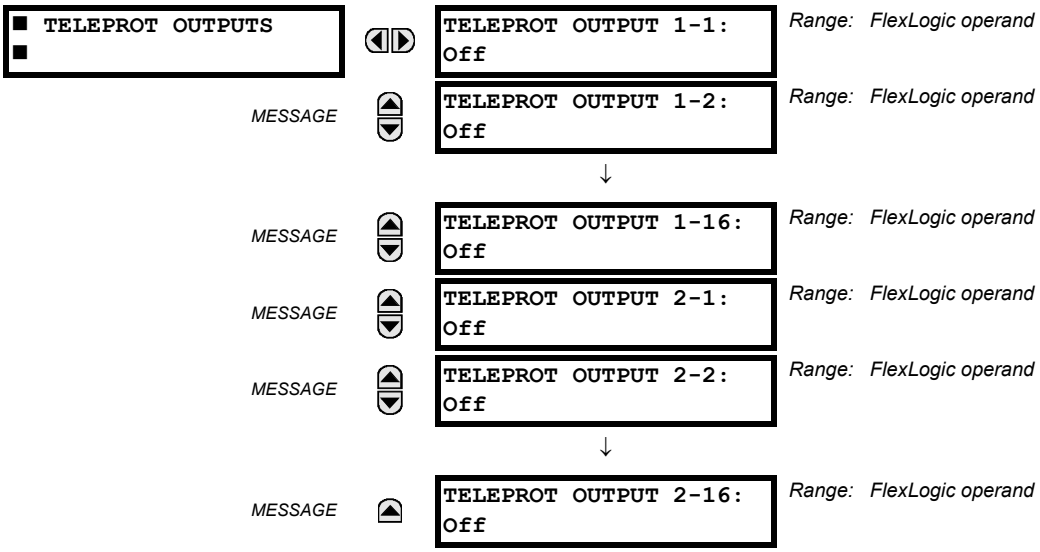

As the following figure demonstrates, processing of the teleprotection inputs/outputs is dependent on the number of communication channels and terminals. On two-terminal two-channel systems, they are processed continuously on each channel and mapped separately per channel. Therefore, to achieve redundancy, the user must assign the same operand on both channels (teleprotection outputs at the sending end or corresponding teleprotection inputs at the receiving end). On three-terminal two-channel systems, redundancy is achieved by programming signal re-transmittal in the case of channel failure between any pair of relays.

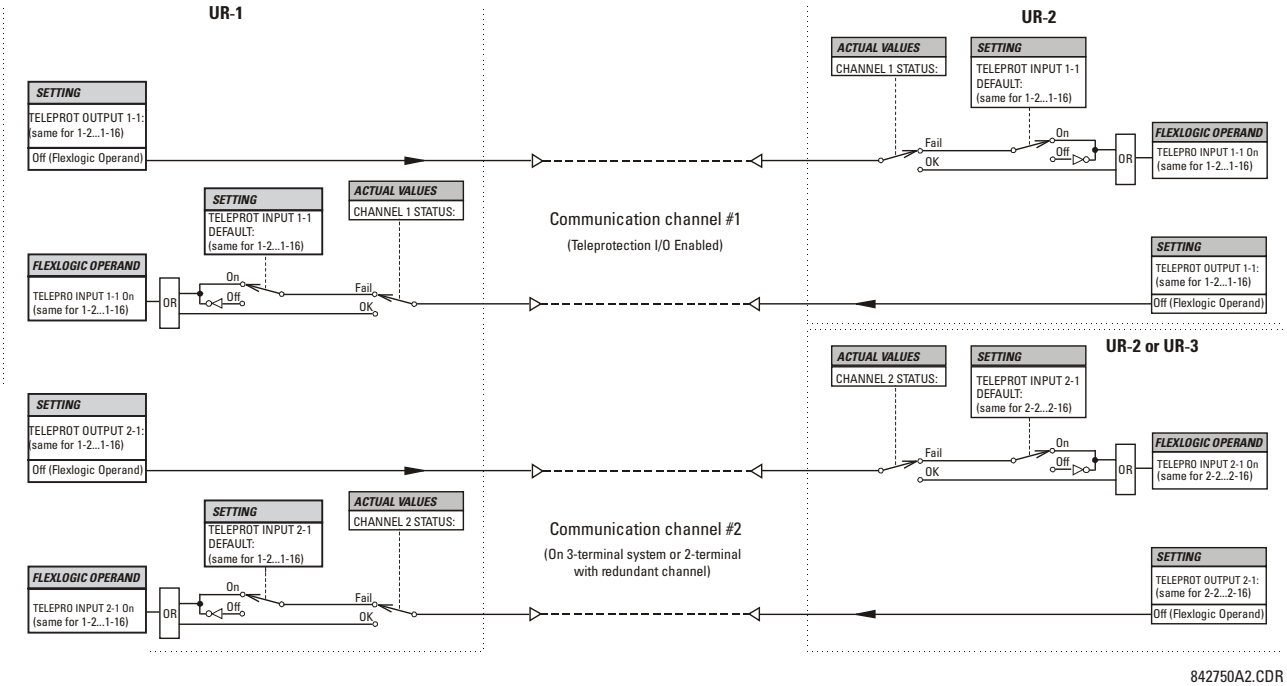

Figure 5–169: TELEPROTECTION INPUT/OUTPUT PROCESSING

PATH: SETTINGS ⇨⇩ INPUTS/OUTPUTS ⇨⇩ IEC 61850 GOOSE ANALOGS ⇨⇩ GOOSE ANALOG INPUT 1(32)

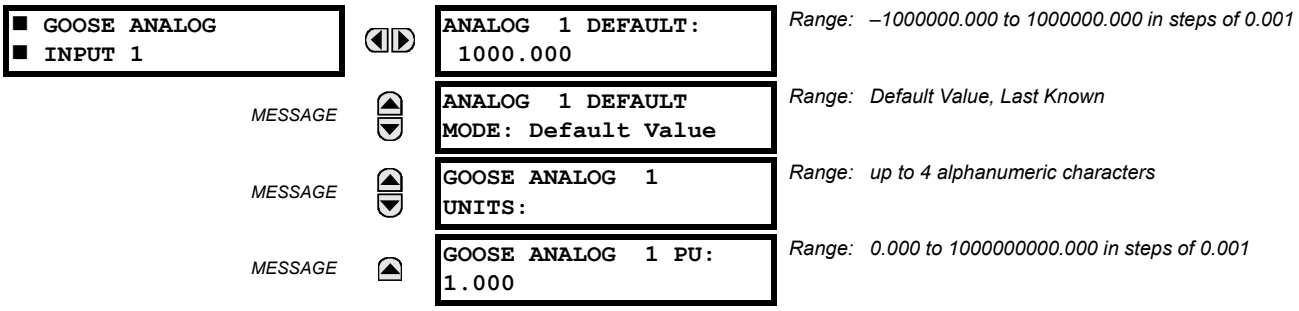

The IEC 61850 GOOSE analog inputs feature allows the transmission of analog values between any two UR-series devices. The following settings are available for each GOOSE analog input.

- **ANALOG 1 DEFAULT**: This setting specifies the value of the GOOSE analog input when the sending device is offline and the **ANALOG 1 DEFAULT MODE** is set to "Default Value".This setting is stored as an IEEE 754 / IEC 60559 floating point number. Because of the large range of this setting, not all possible values can be stored. Some values may be rounded to the closest possible floating point number.
- **ANALOG 1 DEFAULT MODE**: When the sending device is offline and this setting is "Last Known", the value of the GOOSE analog input remains at the last received value. When the sending device is offline and this setting value is "Default Value", then the value of the GOOSE analog input is defined by the **ANALOG 1 DEFAULT** setting.
- **GOOSE ANALOG 1 UNITS**: This setting specifies a four-character alphanumeric string that can is used in the actual values display of the corresponding GOOSE analog input value.

  GOOSE Analogs are floating-point values, with no units. The GOOSE UNIT and PU base settings allow the user to configure GOOSE Analog, so that it can be used in a FlexElement.

  GOOSE Analogs that represent current, voltage, power, frequency, angles, or power factor can be used in a FlexElement. The following text must be used in the UNITS setting, to represent these types of analogs: A, V, W, var, VA, Hz, deg, and no text (blank setting) for power factor.

  GOOSE Analogs can be compared to other GOOSE Analogs with any character string or no string.
- **GOOSE ANALOG 1PU**: This setting specifies the per-unit base factor when using the GOOSE analog input FlexAnalog values in other G60 features, such as FlexElements. The base factor is applied to the GOOSE analog input FlexAnalog quantity to normalize it to a per-unit quantity. The base units are described in the following table.

  The per-unit base setting represents thousands, not single units. For example, a PU base of 1.000 is actually 1000 and a PU base of 0.001 is 1.

  When using GOOSE Analogs and PU base in FlexElements, the largest value that can be displayed in the FlexElement actual values is 2,140,000.000.

Table 5–39: GOOSE ANALOG INPUT BASE UNITS (Sheet 1 of 2)

ELEMENT	BASE UNITS
dcmA	BASE = maximum value of the **DCMA INPUT MAX** setting for the two transducers configured under the +IN and –IN inputs.
FREQUENCY	f_{BASE} = 1 Hz
FREQUENCY RATE OF CHANGE	df/dt_{BASE} = 1 Hz/s
PHASE ANGLE	φ_{BASE} = 360 degrees (see the UR angle referencing convention)
POWER FACTOR	PF_{BASE} = 1.00
RTDs	BASE = 100°C
SENSITIVE DIR POWER (Sns Dir Power)	P_{BASE} = maximum value of $3 \times V_{BASE} \times I_{BASE}$ for the +IN and –IN inputs of the sources configured for the sensitive power directional element(s).
SOURCE CURRENT	I_{BASE} = maximum nominal primary RMS value of the +IN and –IN inputs

Table 5–39: GOOSE ANALOG INPUT BASE UNITS (Sheet 2 of 2)

ELEMENT	BASE UNITS
SOURCE ENERGY (Positive and Negative Watthours, Positive and Negative Varhours)	E_{BASE} = 10000 MWh or MVAh, respectively
SOURCE POWER	P_{BASE} = maximum value of $V_{BASE} \times I_{BASE}$ for the +IN and –IN inputs
SOURCE VOLTAGE	V_{BASE} = maximum nominal primary RMS value of the +IN and –IN inputs
STATOR DIFFERENTIAL CURRENT (Stator Diff Iar, Ibr, and Icr)	I_{BASE} = maximum primary RMS value of the +IN and –IN inputs (CT primary for source currents, and bus reference primary current for bus differential currents)
STATOR GROUND 3RD HARMONIC VOLTAGES (Stator Gnd Vn/V0 3rd)	V_{BASE} = Primary auxiliary voltage of the **STATOR GROUND SOURCE**
STATOR RESTRAINING CURRENT (Stator Diff Iad, Ibd, and Icd)	I_{BASE} = maximum primary RMS value of the +IN and –IN inputs (CT primary for source currents, and bus reference primary current for bus differential currents)
SYNCHROCHECK (Max Delta Volts)	V_{BASE} = maximum primary RMS value of all the sources related to the +IN and –IN inputs
VOLTS PER HERTZ	BASE = 1.00 pu

The GOOSE analog input FlexAnalog values are available for use in other G60 functions that use FlexAnalog values.

5.8.13 IEC 61850 GOOSE INTEGERS

PATH: SETTINGS ⇨⇩ INPUTS/OUTPUTS ⇨⇩ IEC 61850 GOOSE UINTEGERS ⇨⇩ GOOSE UINTEGER INPUT 1(16)

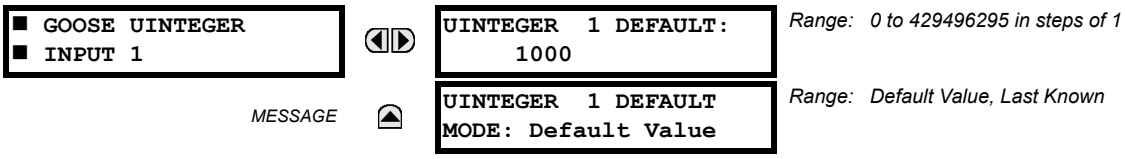

The IEC 61850 GOOSE uinteger inputs feature allows the transmission of FlexInteger values between any two UR-series devices. The following settings are available for each GOOSE uinteger input.

- **UINTEGER 1 DEFAULT**: This setting specifies the value of the GOOSE uinteger input when the sending device is offline and the **UINTEGER 1 DEFAULT MODE** is set to “Default Value”.This setting is stored as a 32-bit unsigned integer number.
- **UINTEGER 1 DEFAULT MODE**: When the sending device is offline and this setting is “Last Known”, the value of the GOOSE uinteger input remains at the last received value. When the sending device is offline and this setting value is “Default Value”, then the value of the GOOSE uinteger input is defined by the **UINTEGER 1 DEFAULT** setting.

The GOOSE integer input FlexInteger values are available for use in other G60 functions that use FlexInteger values.

PATH: SETTINGS ⇨⇩ TRANSDUCER I/O ⇨⇩ DCMA INPUTS ⇨ DCMA INPUT H1(W8)

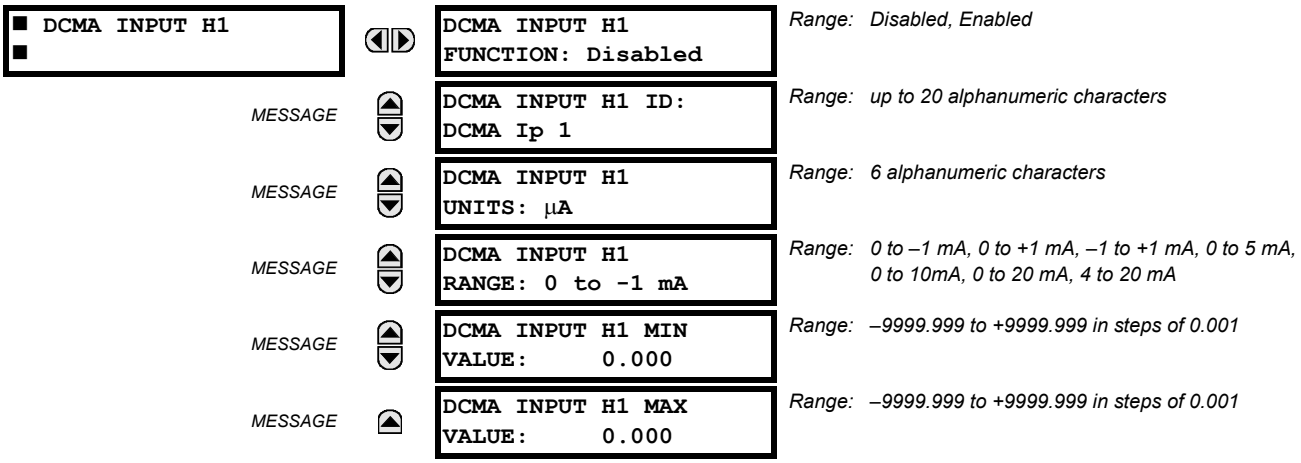

Hardware and software is provided to receive signals from external transducers and convert these signals into a digital format for use as required. The relay will accept inputs in the range of –1 to +20 mA DC, suitable for use with most common transducer output ranges; all inputs are assumed to be linear over the complete range. Specific hardware details are contained in chapter 3.

Before the DCmA input signal can be used, the value of the signal measured by the relay must be converted to the range and quantity of the external transducer primary input parameter, such as DC voltage or temperature. The relay simplifies this process by internally scaling the output from the external transducer and displaying the actual primary parameter.

DCmA input channels are arranged in a manner similar to CT and VT channels. The user configures individual channels with the settings shown here.

The channels are arranged in sub-modules of two channels, numbered from 1 through 8 from top to bottom. On power-up, the relay will automatically generate configuration settings for every channel, based on the order code, in the same general manner that is used for CTs and VTs. Each channel is assigned a slot letter followed by the row number, 1 through 8 inclusive, which is used as the channel number. The relay generates an actual value for each available input channel.

Settings are automatically generated for every channel available in the specific relay as shown above for the first channel of a type 5F transducer module installed in slot H.

The function of the channel may be either “Enabled” or “Disabled”. If “Disabled”, no actual values are created for the channel. An alphanumeric “ID” is assigned to each channel; this ID will be included in the channel actual value, along with the programmed units associated with the parameter measured by the transducer, such as volts, °C, megawatts, etc. This ID is also used to reference the channel as the input parameter to features designed to measure this type of parameter. The **DCMA INPUT H1 RANGE** setting specifies the mA DC range of the transducer connected to the input channel.

The **DCMA INPUT H1 MIN VALUE** and **DCMA INPUT H1 MAX VALUE** settings are used to program the span of the transducer in primary units. For example, a temperature transducer might have a span from 0 to 250°C; in this case the **DCMA INPUT H1 MIN VALUE** value is “0” and the **DCMA INPUT H1 MAX VALUE** value is “250”. Another example would be a watts transducer with a span from –20 to +180 MW; in this case the **DCMA INPUT H1 MIN VALUE** value would be “–20” and the **DCMA INPUT H1 MAX VALUE** value “180”. Intermediate values between the min and max values are scaled linearly.

PATH: SETTINGS ⇨⇩ TRANSDUCER I/O ⇨⇩ RTD INPUTS ⇨ RTD INPUT H1(W8)

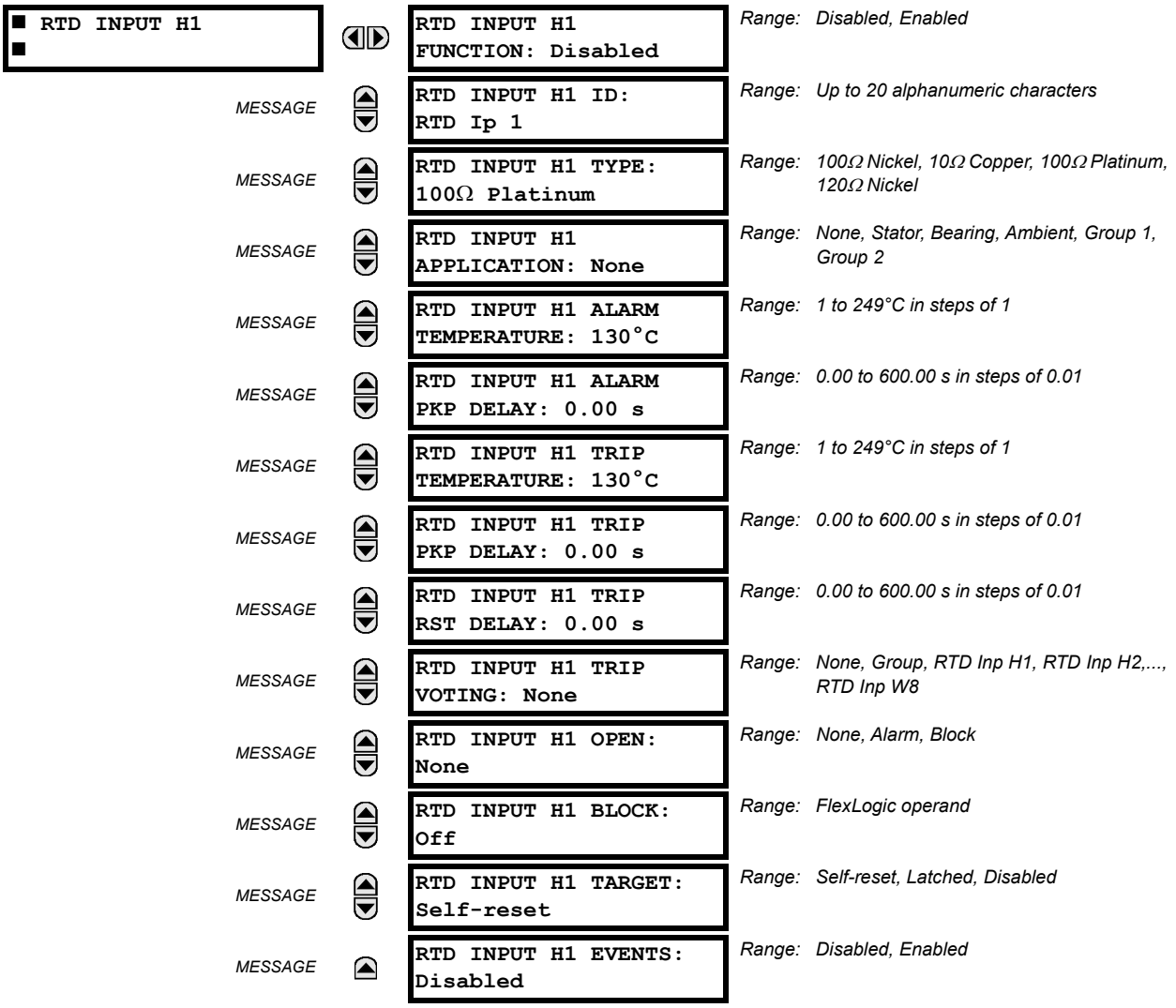

The RTD inputs convert values of input resistance into temperature for further operations. These channels are intended to be connected to any of the RTD types in common use. Specific hardware details are contained in chapter 3.

RTD input channels are arranged in a manner similar to CT and VT channels. The user configures individual channels with the settings shown here.

The channels are arranged in sub-modules of two channels, numbered from 1 through 8 from top to bottom. On power-up, the relay will automatically generate configuration settings for every channel, based on the order code, in the same general manner that is used for CTs and VTs. Each channel is assigned a slot letter followed by the row number, 1 through 8 inclusive, which is used as the channel number. The relay generates an actual value for each available input channel.

Settings are automatically generated for every channel available in the specific relay as shown above for the first channel of a type 5C transducer module installed in the first available slot.

- **RTD INPUT H1 FUNCTION**: The function of the channel may be either “Enabled” or “Disabled”. If set to “Disabled”, there will not be an actual value created for the channel.
- **RTD INPUT H1 ID**: An alphanumeric ID is assigned to the channel. This ID will be included in the channel actual values. It is also used to reference the channel as the input parameter to features designed to measure this type of parameter.

- **RTD INPUT H1 TYPE**: This setting specifies the RTD type. Four different RTD types are available: 100 Ω Nickel, 10 Ω Copper, 100 Ω Platinum, and 120 Ω Nickel. Refer the table below for reference temperature values for each type.

Table 5–40: RTD TEMPERATURE VS. RESISTANCE

TEMPERATURE		RESISTANCE (IN OHMS)			
°C	°F	100 OHM PT (DIN 43760)	120 OHM NI	100 OHM NI	10 OHM CU
–50	–58	80.31	86.17	71.81	7.10
–40	–40	84.27	92.76	77.30	7.49
–30	–22	88.22	99.41	82.84	7.88
–20	–4	92.16	106.15	88.45	8.26
–10	14	96.09	113.00	94.17	8.65
0	32	100.00	120.00	100.00	9.04
10	50	103.90	127.17	105.97	9.42
20	68	107.79	134.52	112.10	9.81
30	86	111.67	142.06	118.38	10.19
40	104	115.54	149.79	124.82	10.58
50	122	119.39	157.74	131.45	10.97
60	140	123.24	165.90	138.25	11.35
70	158	127.07	174.25	145.20	11.74
80	176	130.89	182.84	152.37	12.12
90	194	134.70	191.64	159.70	12.51
100	212	138.50	200.64	167.20	12.90
110	230	142.29	209.85	174.87	13.28
120	248	146.06	219.29	182.75	13.67
130	266	149.82	228.96	190.80	14.06
140	284	153.58	238.85	199.04	14.44
150	302	157.32	248.95	207.45	14.83
160	320	161.04	259.30	216.08	15.22
170	338	164.76	269.91	224.92	15.61
180	356	168.47	280.77	233.97	16.00
190	374	172.46	291.96	243.30	16.39
200	392	175.84	303.46	252.88	16.78
210	410	179.51	315.31	262.76	17.17
220	428	183.17	327.54	272.94	17.56
230	446	186.82	340.14	283.45	17.95
240	464	190.45	353.14	294.28	18.34
250	482	194.08	366.53	305.44	18.73

- **RTD INPUT H1 APPLICATION**: This setting allows each individual RTD to be assigned to a group application. This is useful for applications that require group measurement for voting. A value of “None” specifies that the RTD will operate individually and not part of any RTD group. All RTDs programmed to “Stator” are used for RTD biasing of the G60 thermal model. Common groups are provided for rotating machines applications such as ambient, bearing, group 1, or group 2. If the **RTD INPUT H1 TRIP VOTING** setting value is “Group”, then it is allowed to issue a trip if $N - 1$ RTDs from the same group also pick up, where N is the number of enabled RTDs from the group.
- **RTD INPUT H1 ALARM TEMPERATURE**: This setting specifies the temperature pickup level for the alarm stage.
- **RTD INPUT H1 ALARM PKP DELAY**: This setting specifies time delay for the alarm stage until the output can be asserted.
- **RTD INPUT H1 TRIP TEMPERATURE**: This setting specifies the temperature pickup level for the trip stage.
- **RTD INPUT H1 TRIP PKP DELAY**: This setting specifies time delay for the trip stage until the output can be asserted.

- **RTD INPUT H1 TRIP RST DELAY**: This setting specifies the reset delay to seal-in the trip signal.
- **RTD INPUT H1 TRIP VOTING**: This setting allows securing trip signal by voting with other RTDs. A value of "None" indicates that element operates individually and no voting takes place.

  A value of "Group" indicates that element is allowed to issue a trip if *N* – 1 of other RTDs of the same group pick up as well (where *N* is the number of enabled RTDs from the group). For example, if three RTDs are assigned to the same group, there should be at least one additional RTD of the same group picked up to issue a trip command.

  The "RTD Inp H1" through "RTD Inp W8" values indicate that element is allowed to issue a trip if the corresponding peer RTD is also picked up.
- **RTD INPUT H1 OPEN**: This setting allows monitoring an open RTD sensor circuit. If this functionality is not required, then a value of "None" will disable monitoring and assertion of output operands.

  If set to "Alarm", the monitor will set an alarm when a broken sensor is detected.

  If set to "Block", the monitor will set an alarm and simultaneously block RTD operation when a broken sensor is detected.

  If targets are enabled, a message will appear on the display identifying the broken RTD. If this feature is used, it is recommended that the alarm be programmed as latched so that intermittent RTDs are detected and corrective action may be taken.
- **RTD INPUT H1 BLOCK**: This setting is used to block RTD operation.

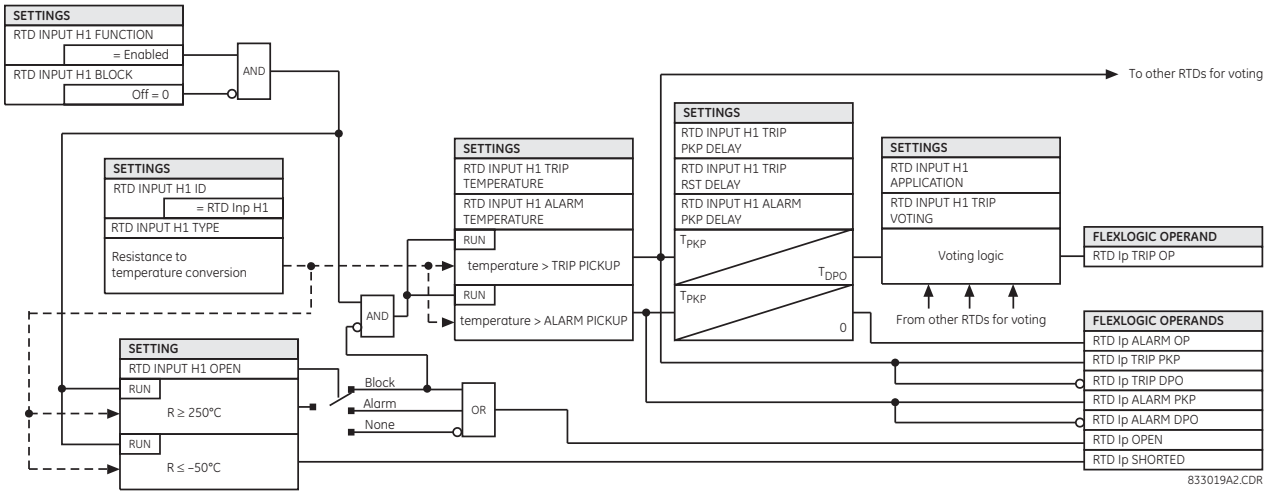

Figure 5–170: RTD INPUT PROTECTION LOGIC

5.9.3 RRTD INPUTS

a) MAIN MENU

PATH: SETTINGS ⇨⇩ TRANSDUCER I/O ⇨⇩ RRTD INPUTS

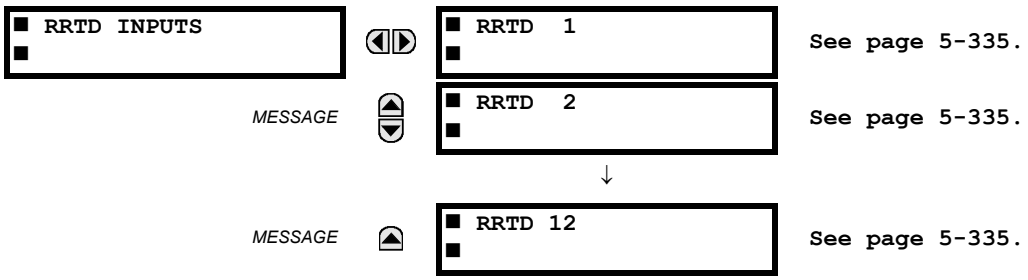

Menus are available to configure each of the remote RTDs.

It is recommended to use the G60 to configure the RRTD parameters. If the RRTDPC software is used to change the RRTD settings directly (the application and type settings), then one of the following two operations is required for changes to be reflected in the G60.

- Cycle power to G60.
- Break then re-establish the communication link between the RRTD unit and the G60. This will cause the RRTD COMM FAIL operand to be asserted then de-asserted.

b) REMOTE RTDS 1 THROUGH 12

PATH: SETTINGS ⇨⇩ TRANSDUCER I/O ⇨⇩ RRTD INPUTS ⇨⇩ RRTD RTD 1(12)

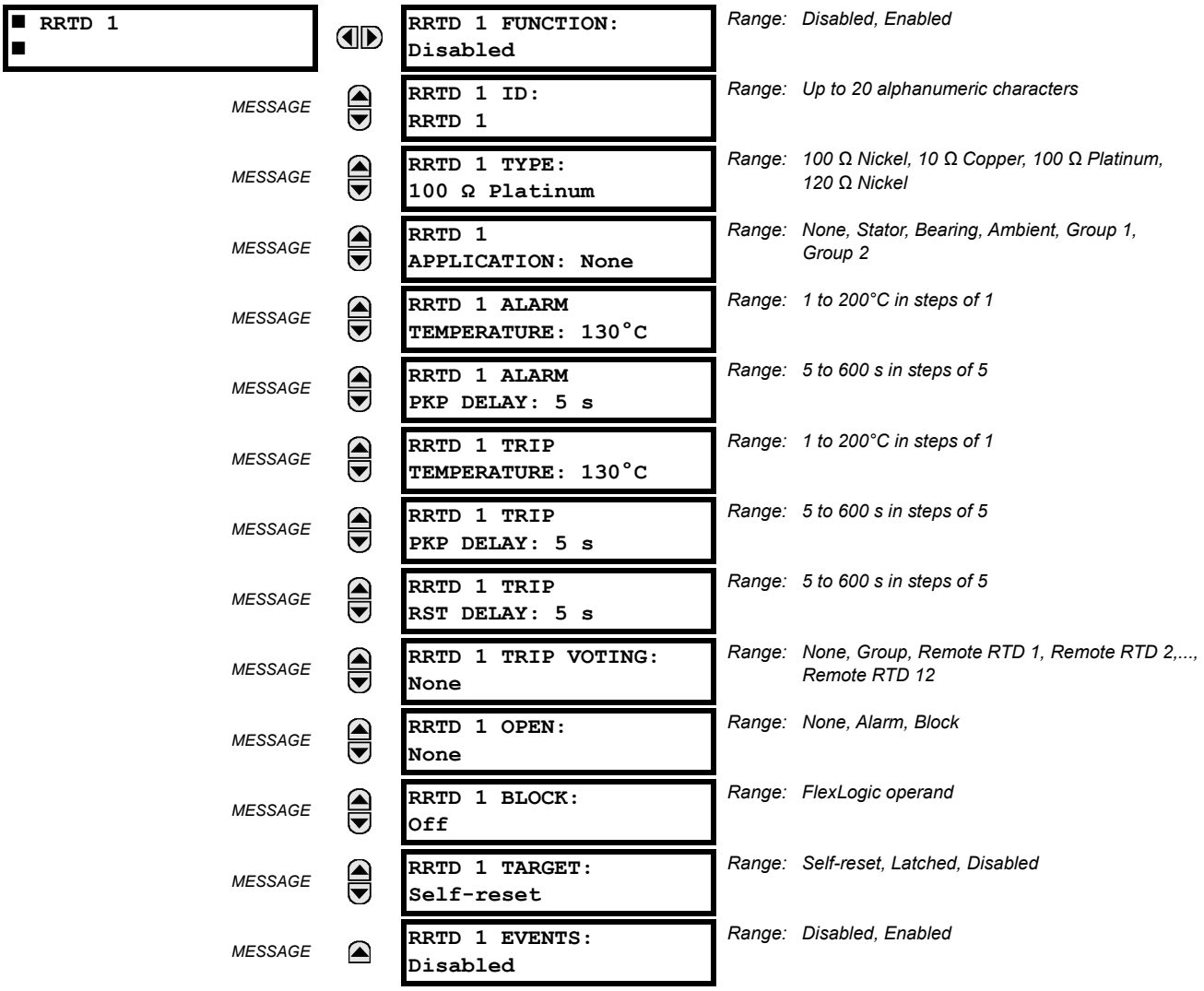

The remote RTD inputs convert values of input resistance into temperature for further operations. These inputs are intended to be connected to any of the RTD types in common use. Specific hardware details are contained in chapter 3.

On power up, the G60 reads and saves all application and type settings from the RRTD. This synchronizes the RRTD and G60. Any changes to RRTD settings (function, application, or type) from the G60 interface are immediately reflected in the RRTD. The following rules are followed.

- If the **RRTD 1 FUNCTION** setting is “Enabled”, then the **RRTD 1 APPLICATION** setting value will be written to RRTD device.
- If the **RRTD 1 FUNCTION** setting is “Disabled”, then **RRTD1 APPLICATION** setting value is set as “None”.
- If the **RRTD 1 APPLICATION** or **RRTD 1 TYPE** settings are changes, then these settings are immediately written to the RRTD device.

- If the **RRTD 1 APPLICATION** setting is “Group 1” or “Group 2”, then a value of “Other” is written to the RRTD device.

An RRTD actual value of –43°C implies that the **RRTD 1 FUNCTION** setting is “Enabled” but the corresponding **RRTD 1 APPLICATION** setting is “None”.

If the RRTD communication link with the G60 is broken, then the last temperature actual values are retained until the RRTD communication failure is detected. When this occurs, a RRTD COMM FAILURE self-test alarm and target message is generated, and an event is logged in the event recorder and the temperature actual values reset to 0. When the link is re-established, the **RRTD 1 APPLICATION** and **RRTD 1 TYPE** settings are read from the RRTD to re-synchronize the device.

- **RRTD 1 FUNCTION**: This setting enables and disables the remote RTD. If set to “Disabled”, no actual value is created for the remote RTD.
- **RRTD 1 ID**: This setting is used to assign alphanumeric ID is assigned to the remote RTD. This ID will be included in the remote RTD actual values. It is also used to reference the remote RTD input to features using the remote RTD.
- **RRTD 1 TYPE**: This setting specifies the remote RTD type. Four different RTD types are available: 100 Ω Nickel, 10 Ω Copper, 100 Ω Platinum, and 120 Ω Nickel.

  The RRTD converts resistance to temperature as per the values in the following table. The G60 reads the RTD temperatures from the RRTD once every five seconds and applies protection accordingly. The RRTDs can be used to provide RTD bias in the existing thermal model.

Table 5–41: RTD TEMPERATURE VS. RESISTANCE

TEMPERATURE		RESISTANCE (IN OHMS)			
°C	°F	100 OHM PT (DIN 43760)	120 OHM NI	100 OHM NI	10 OHM CU
–40	–40	84.27	92.76	79.13	7.49
–30	–22	88.22	99.41	84.15	7.88
–20	–4	92.16	106.15	89.23	8.26
–10	14	96.09	113	94.58	8.65
0	32	100	120	100	9.04
10	50	103.9	127.17	105.6	9.42
20	68	107.79	134.52	111.2	9.81
30	86	111.67	142.06	117.1	10.19
40	104	115.54	149.79	123	10.58
50	122	119.39	157.74	129.1	10.97
60	140	123.24	165.9	135.3	11.35
70	158	127.07	174.25	141.7	11.74
80	176	130.89	182.84	148.3	12.12
90	194	134.7	191.64	154.9	12.51
100	212	138.5	200.64	161.8	12.9
110	230	142.29	209.85	168.8	13.28
120	248	146.06	219.29	176	13.67
130	266	149.82	228.96	183.3	14.06
140	284	153.58	238.85	190.9	14.44
150	302	157.32	248.95	198.7	14.83
160	320	161.04	259.3	206.6	15.22
170	338	164.76	269.91	214.8	15.61
180	356	168.47	280.77	223.2	16
190	374	172.46	291.96	231.6	16.39
200	392	175.84	303.46	240	16.78

An RRTD open condition is detected when actual RRTD resistance is greater than 1000 ohms and RRTD open is displayed as “250°C” in the G60.

An RRTD short condition is detected when actual RRTD temperature is less than –40°C and RRTD short is displayed as is "–50°C". in the G60.

- **RRTD 1 APPLICATION**: This setting allows each remote RTD to be assigned to a group application. This is useful for applications that require group measurement for voting. A value of "None" specifies that the remote RTD will operate individually and not part of any RTD group. All remote RTDs programmed to "Stator" are used for RTD biasing of the G60 thermal model. Common groups are provided for rotating machines applications such as ambient, bearing, group 1, or group 2. If the **REMOTE RTD 1 TRIP VOTING** setting value is "Group", then it is allowed to issue a trip if $N - 1$ RTDs from the same group also pick up, where N is the number of enabled RTDs from the group.
- **RRTD 1 ALARM TEMPERATURE**: This setting specifies the temperature pickup level for the alarm stage. The range of 1 to 200°C differs from the existing RTD settings to correspond to the range of the RRTD unit.
- **RRTD 1 ALARM PKP DELAY**: This setting specifies time delay for the alarm stage until the output can be asserted. The range of 5 to 600 seconds differs from the existing RTD settings to correspond to the range of the RRTD unit.
- **RRTD 1 TRIP TEMPERATURE**: This setting specifies the temperature pickup level for the trip stage. The range of 1 to 200°C differs from the existing RTD settings to correspond to the range of the RRTD unit.
- **RRTD 1 TRIP PKP DELAY**: This setting specifies time delay for the trip stage until the output can be asserted. The range of 5 to 600 seconds differs from the existing RTD settings to correspond to the range of the RRTD unit.
- **RRTD 1 TRIP RST DELAY**: This setting specifies the reset delay to seal-in the trip signal.
- **RRTD 1 TRIP VOTING**: This setting allows securing trip signal by voting with other RTDs. A value of "None" indicates that element operates individually and no voting takes place.

  A value of "Group" indicates that element is allowed to issue a trip if $N - 1$ of other RTDs of the same group pick up as well (where N is the number of enabled RTDs from the group). For example, if three RTDs are assigned to the same group, there should be at least one additional RTD of the same group picked up to issue a trip command.

  The "Remote RTD 1" through "Remote RTD 12" values indicate that element is allowed to issue a trip if the corresponding peer RTD is also picked up.
- **RRTD 1 OPEN**: This setting allows monitoring an open remote RTD sensor circuit. If this functionality is not required, then a value of "None" will disable monitoring and assertion of output operands.

  If set to "Alarm", the monitor will set an alarm when a broken sensor is detected.

  If set to "Block", the monitor will set an alarm and simultaneously block remote RTD operation when a broken sensor is detected.

  If targets are enabled, a message will appear on the display identifying the broken RTD. If this feature is used, it is recommended that the alarm be programmed as latched so that intermittent RTDs are detected and corrective action may be taken.
- **RRTD 1 BLOCK**: This setting is used to block remote RTD operation.

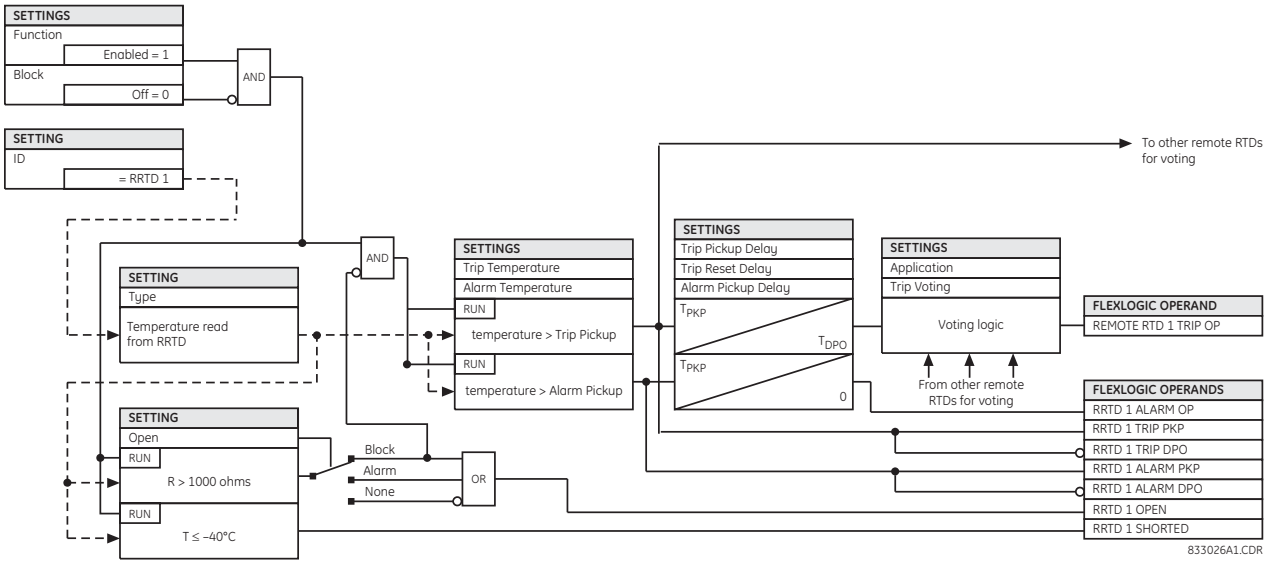

Figure 5–171: REMOTE RTD INPUT PROTECTION LOGIC

5.9.4 DCMA OUTPUTS

PATH: SETTINGS ⇨⇩ TRANSDUCER I/O ⇨⇩ DCMA OUTPUTS ⇨ DCMA OUTPUT H1(W8)

```
■ DCMA OUTPUT H1
■
```

```
DCMA OUTPUT H1
SOURCE: Off
```

Range: Off, any analog actual value parameter

MESSAGE

```
DCMA OUTPUT H1
RANGE: –1 to 1 mA
```

Range: –1 to 1 mA, 0 to 1 mA, 4 to 20 mA

MESSAGE

```
DCMA OUTPUT H1
MIN VAL: 0.000 pu
```

Range: –90.000 to 90.000 pu in steps of 0.001

MESSAGE

```
DCMA OUTPUT H1
MAX VAL: 1.000 pu
```

Range: –90.000 to 90.000 pu in steps of 0.001

Hardware and software is provided to generate DCmA signals that allow interfacing with external equipment. Specific hardware details are contained in chapter 3. The DCmA output channels are arranged in a manner similar to transducer input or CT and VT channels. The user configures individual channels with the settings shown below.

The channels are arranged in sub-modules of two channels, numbered 1 through 8 from top to bottom. On power-up, the relay automatically generates configuration settings for every channel, based on the order code, in the same manner used for CTs and VTs. Each channel is assigned a slot letter followed by the row number, 1 through 8 inclusive, which is used as the channel number.

Both the output range and a signal driving a given output are user-programmable via the following settings menu (an example for channel M5 is shown).

The relay checks the driving signal (x in equations below) for the minimum and maximum limits, and subsequently re-scales so the limits defined as **MIN VAL** and **MAX VAL** match the output range of the hardware defined as **RANGE**. The following equation is applied:

$$I_{out} = \begin{cases} I_{min} & \text{if } x < \textbf{MIN VAL} \\ I_{max} & \text{if } x > \textbf{MAX VAL} \\ k(x - \textbf{MIN VAL}) + I_{min} & \text{otherwise} \end{cases} \quad \textbf{(EQ 5.54)}$$

where: x is a driving signal specified by the **SOURCE** setting
I_{min} and I_{max} are defined by the **RANGE** setting
k is a scaling constant calculated as:

$$k = \frac{I_{max} - I_{min}}{\text{MAX VAL} - \text{MIN VAL}} \quad \text{(EQ 5.55)}$$

The feature is intentionally inhibited if the **MAX VAL** and **MIN VAL** settings are entered incorrectly, e.g. when **MAX VAL** – **MIN VAL** < 0.1 pu. The resulting characteristic is illustrated in the following figure.

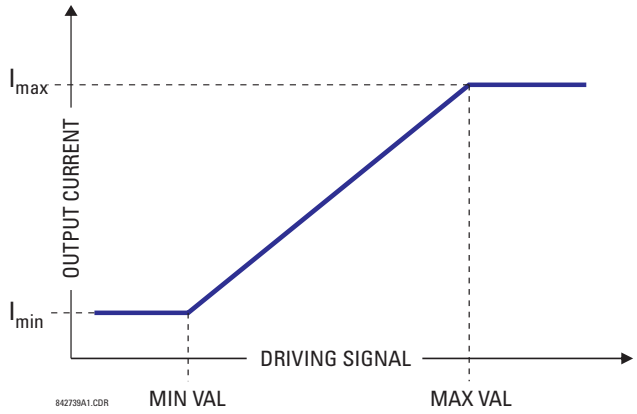

Figure 5–172: DCMA OUTPUT CHARACTERISTIC

The DCmA output settings are described below.

- **DCMA OUTPUT H1 SOURCE**: This setting specifies an internal analog value to drive the analog output. Actual values (FlexAnalog parameters) such as power, current amplitude, voltage amplitude, power factor, etc. can be configured as sources driving DCmA outputs. Refer to Appendix A for a complete list of FlexAnalog parameters.
- **DCMA OUTPUT H1 RANGE**: This setting allows selection of the output range. Each DCmA channel may be set independently to work with different ranges. The three most commonly used output ranges are available.
- **DCMA OUTPUT H1 MIN VAL**: This setting allows setting the minimum limit for the signal that drives the output. This setting is used to control the mapping between an internal analog value and the output current. The setting is entered in per-unit values. The base units are defined in the same manner as the FlexElement base units.
- **DCMA OUTPUT H1 MAX VAL**: This setting allows setting the maximum limit for the signal that drives the output. This setting is used to control the mapping between an internal analog value and the output current. The setting is entered in per-unit values. The base units are defined in the same manner as the FlexElement base units.

NOTE

The **DCMA OUTPUT H1 MIN VAL** and **DCMA OUTPUT H1 MAX VAL** settings are ignored for power factor base units (i.e. if the **DCMA OUTPUT H1 SOURCE** is set to FlexAnalog value based on power factor measurement).

Three application examples are described below.

EXAMPLE: POWER MONITORING

A three phase active power on a 13.8 kV system measured via UR-series relay source 1 is to be monitored by the DCmA H1 output of the range of –1 to 1 mA. The following settings are applied on the relay: CT ratio = 1200:5, VT secondary 115, VT connection is delta, and VT ratio = 120. The nominal current is 800 A primary and the nominal power factor is 0.90. The power is to be monitored in both importing and exporting directions and allow for 20% overload compared to the nominal.

The nominal three-phase power is:

$$P = \sqrt{3} \times 13.8 \text{ kV} \times 0.8 \text{ kA} \times 0.9 = 17.21 \text{ MW} \quad \text{(EQ 5.56)}$$

The three-phase power with 20% overload margin is:

$$P_{max} = 1.2 \times 17.21 \text{ MW} = 20.65 \text{ MW} \quad \text{(EQ 5.57)}$$

The base unit for power (refer to the FlexElements section in this chapter for additional details) is:

$$P_{BASE} = 115\ \text{V} \times 120 \times 1.2\ \text{kA} = 16.56\ \text{MW} \quad \textbf{(EQ 5.58)}$$

The minimum and maximum power values to be monitored (in pu) are:

$$\text{minimum power} = \frac{-20.65\ \text{MW}}{16.56\ \text{MW}} = -1.247\ \text{pu}, \quad \text{maximum power} = \frac{20.65\ \text{MW}}{16.56\ \text{MW}} = 1.247\ \text{pu} \quad \textbf{(EQ 5.59)}$$

The following settings should be entered:

DCMA OUTPUT H1 SOURCE: "SRC 1 P"
DCMA OUTPUT H1 RANGE: "–1 to 1 mA"
DCMA OUTPUT H1 MIN VAL: "–1.247 pu"
DCMA OUTPUT H1 MAX VAL: "1.247 pu"

With the above settings, the output will represent the power with the scale of 1 mA per 20.65 MW. The worst-case error for this application can be calculated by superimposing the following two sources of error:

- ±0.5% of the full scale for the analog output module, or $\pm 0.005 \times (1 - (-1)) \times 20.65\ \text{MW} = \pm 0.207\ \text{MW}$
- ±1% of reading error for the active power at power factor of 0.9

For example at the reading of 20 MW, the worst-case error is 0.01 × 20 MW + 0.207 MW = 0.407 MW.

EXAMPLE: CURRENT MONITORING

The phase A current (true RMS value) is to be monitored via the H2 current output working with the range from 4 to 20 mA. The CT ratio is 5000:5 and the maximum load current is 4200 A. The current should be monitored from 0 A upwards, allowing for 50% overload.

The phase current with the 50% overload margin is:

$$I_{max} = 1.5 \times 4.2\ \text{kA} = 6.3\ \text{kA} \quad \textbf{(EQ 5.60)}$$

The base unit for current (refer to the FlexElements section in this chapter for additional details) is:

$$I_{BASE} = 5\ \text{kA} \quad \textbf{(EQ 5.61)}$$

The minimum and maximum power values to be monitored (in pu) are:

$$\text{minimum current} = \frac{0\ \text{kA}}{5\ \text{kA}} = 0\ \text{pu}, \quad \text{maximum current} = \frac{6.3\ \text{kA}}{5\ \text{kA}} = 1.26\ \text{pu} \quad \textbf{(EQ 5.62)}$$

The following settings should be entered:

DCMA OUTPUT H2 SOURCE: "SRC 1 Ia RMS"
DCMA OUTPUT H2 RANGE: "4 to 20 mA"
DCMA OUTPUT H2 MIN VAL: "0.000 pu"
DCMA OUTPUT H2 MAX VAL: "1.260 pu"

The worst-case error for this application could be calculated by superimposing the following two sources of error:

- ±0.5% of the full scale for the analog output module, or $\pm 0.005 \times (20 - 4) \times 6.3\ \text{kA} = \pm 0.504\ \text{kA}$
- ±0.25% of reading or ±0.1% of rated (whichever is greater) for currents between 0.1 and 2.0 of nominal

For example, at the reading of 4.2 kA, the worst-case error is max(0.0025 × 4.2 kA, 0.001 × 5 kA) + 0.504 kA = 0.515 kA.

EXAMPLE: VOLTAGE MONITORING

A positive-sequence voltage on a 400 kV system measured via source 2 is to be monitored by the DCmA H3 output with a range of 0 to 1 mA. The VT secondary setting is 66.4 V, the VT ratio setting is 6024, and the VT connection setting is "Delta". The voltage should be monitored in the range from 70% to 110% of nominal.

The minimum and maximum positive-sequence voltages to be monitored are:

$$V_{min} = 0.7 \times \frac{400\ \text{kV}}{\sqrt{3}} = 161.66\ \text{kV}, \quad V_{max} = 1.1 \times \frac{400\ \text{kV}}{\sqrt{3}} = 254.03\ \text{kV} \quad \textbf{(EQ 5.63)}$$

The base unit for voltage (refer to the FlexElements section in this chapter for additional details) is:

$$V_{BASE} = 0.0664 \text{ kV} \times 6024 = 400 \text{ kV} \quad \textbf{(EQ 5.64)}$$

The minimum and maximum voltage values to be monitored (in pu) are:

$$\text{minimum voltage} = \frac{161.66 \text{ kV}}{400 \text{ kV}} = 0.404 \text{ pu}, \quad \text{maximum voltage} = \frac{254.03 \text{ kV}}{400 \text{ kV}} = 0.635 \text{ pu} \quad \textbf{(EQ 5.65)}$$

The following settings should be entered:

DCMA OUTPUT H3 SOURCE: "SRC 2 V_1 mag"
DCMA OUTPUT H3 RANGE: "0 to 1 mA"
DCMA OUTPUT H3 MIN VAL: "0.404 pu"
DCMA OUTPUT H3 MAX VAL: "0.635 pu"

The limit settings differ from the expected 0.7 pu and 1.1 pu because the relay calculates the positive-sequence quantities scaled to the phase-to-ground voltages, even if the VTs are connected in "Delta" (see the Metering Conventions section in chapter 6), while at the same time the VT nominal voltage is 1 pu for the settings. Consequently the settings required in this example differ from naturally expected by the factor of $\sqrt{3}$.

The worst-case error for this application could be calculated by superimposing the following two sources of error:

- ±0.5% of the full scale for the analog output module, or $\pm 0.005 \times (1 - 0) \times 254.03 \text{ kV} = \pm 1.27 \text{ kV}$
- ±0.5% of reading

For example, under nominal conditions, the positive-sequence reads 230.94 kV and the worst-case error is 0.005 x 230.94 kV + 1.27 kV = 2.42 kV.

PATH: SETTINGS ⇨⇩ TESTING

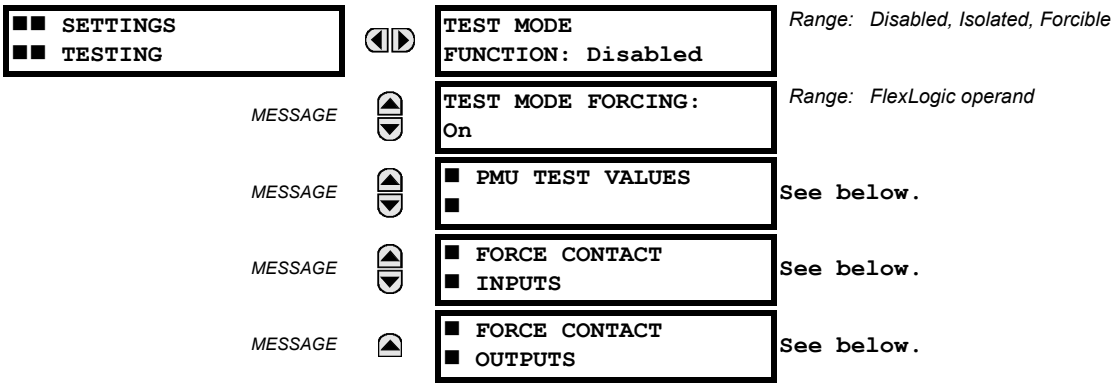

The G60 provides a test facility to verify the functionality of contact inputs and outputs, some communication functions and the phasor measurement unit (where applicable), using simulated conditions. The test mode is indicated on the relay faceplate by a Test Mode LED indicator.

The test mode may be in any of three states: disabled, isolated, or forcible.

In the "Disabled" mode, G60 operation is normal and all test features are disabled.

In the "Isolated" mode, the G60 is prevented from performing certain control actions, including tripping via contact outputs. All relay contact outputs, including latching outputs, are disabled. Channel tests and phasor measurement unit tests remain usable on applicable UR-series models.

In the "Forcible" mode, the operand selected by the **TEST MODE FORCING** setting controls the relay inputs and outputs. If the test mode is forcible, and the operand assigned to the **TEST MODE FORCING** setting is "Off", the G60 inputs and outputs operate normally. If the test mode is forcible, and the operand assigned to the **TEST MODE FORCING** setting is "On", the G60 contact inputs and outputs are forced to the values specified in the following sections. Forcing may be controlled by manually changing the operand selected by the **TEST MODE FORCING** setting between on and off, or by selecting a user-programmable pushbutton, contact input, or communication-based input operand. Channel tests and phasor measurement unit tests remain usable on applicable UR-series models.

NOTE

Communications based inputs and outputs remain fully operational in test mode. If a control action is programmed using direct inputs and outputs or remote inputs and outputs, then the test procedure must take this into account.

When in "Forcible" mode, the operand selected by the **TEST MODE FORCING** setting dictates further response of the G60 to testing conditions. To force contact inputs and outputs through relay settings, set **TEST MODE FORCING** to "On". To force contact inputs and outputs through a user-programmable condition, such as FlexLogic operand (pushbutton, contact input, communication-based input, or a combination of these), set **TEST MODE FORCING** to the desired operand. The contact input or output is forced when the selected operand assumes a logic 1 state.

The G60 remains fully operational in test mode, allowing for various testing procedures. In particular, the protection and control elements, FlexLogic, and communication-based inputs and outputs function normally.

The only difference between the normal operation and the test mode is the behavior of the input and output contacts. The contact inputs can be forced to report as open or closed or remain fully operational, whereas the contact outputs can be forced to open, close, freeze, or remain fully operational. The response of the contact input and output contacts to the test mode is programmed individually for each input and output using the force contact inputs and force contact outputs test functions described in the following sections.

The test mode state is indicated on the relay faceplate by a combination of the Test Mode LED indicator, the In-Service LED indicator, and by the critical fail relay, as shown in the following table.

Table 5–42: TEST MODE OPERATION

TEST MODE FUNCTION	TEST MODE FORCING OPERAND	IN-SERVICE LED	TEST MODE LED	CRITICAL FAIL RELAY	INPUT AND OUTPUT BEHAVIOR
Disabled	No effect	Unaffected	Off	Unaffected	Contact outputs and inputs are under normal operation. Channel tests and PMU tests not operational (where applicable).
Isolated	No effect	Off	On	De-energized	Contact outputs are disabled and contact inputs are operational. Channel tests and PMU tests are also operational (where applicable).
Forcible	On (logic 1)	Off	Flashing	De-energized	Contact inputs and outputs are controlled by the force contact input and force contact output functions. Channel tests and PMU tests are operational (where applicable).
	Off (logic 0)	Off	Flashing	De-energized	Contact outputs and inputs are under normal operation. Channel tests and PMU tests are also operational (where applicable).

The **TEST MODE FUNCTION** setting can only be changed by a direct user command. Following a restart, power up, settings upload, or firmware upgrade, the test mode will remain at the last programmed value. This allows a G60 that has been placed in isolated mode to remain isolated during testing and maintenance activities. On restart, the **TEST MODE FORCING** setting and the force contact input and force contact output settings all revert to their default states.

5.10.2 PHASOR MEASUREMENT UNIT TEST VALUES

PATH: SETTINGS ⇨⇩ TESTING ⇨⇩ PMU TEST VALUES ⇨ PMU 1 TEST VALUES

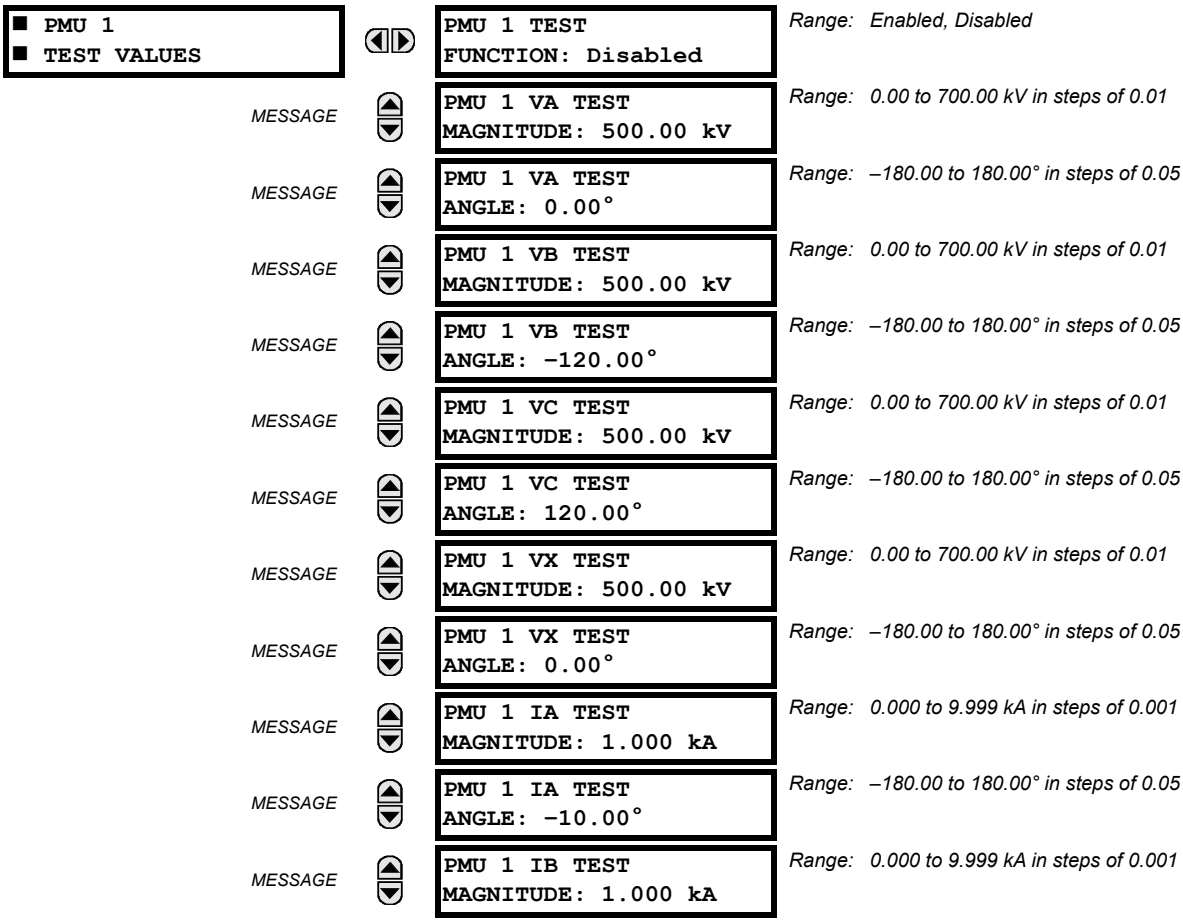

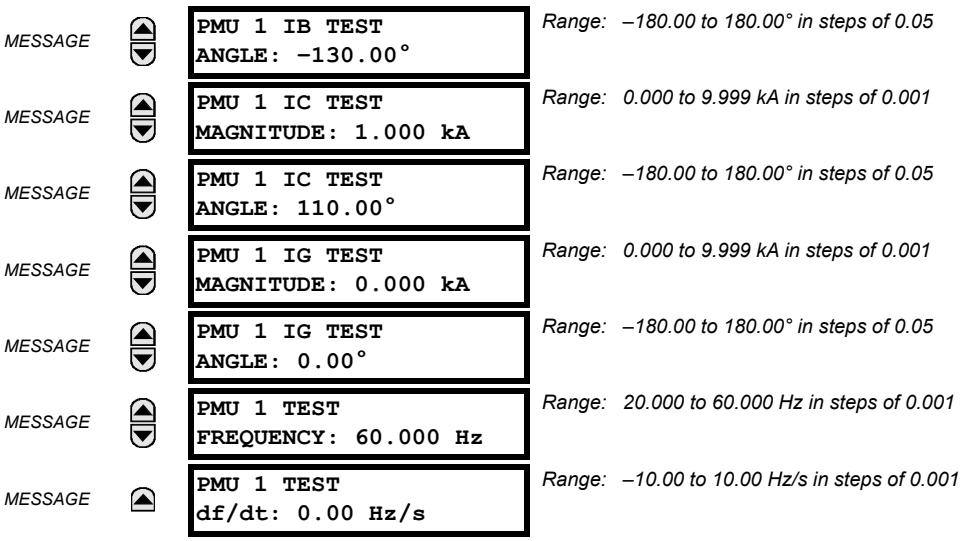

The relay must be in test mode to use the PMU test mode. That is, the **TESTING ⇨ TEST MODE FUNCTION** setting must be enabled and the **TESTING ⇨⇩ TEST MODE INITIATE** initiating signal must be "On".

During the PMU test mode, the physical channels (VA, VB, VC, VX, IA, IB, IC, and IG), frequency, and rate of change of frequency are substituted with user values, while the symmetrical components are calculated from the physical channels. The test values are not explicitly marked in the outgoing data frames. When required, it is recommended to use the user-programmable digital channels to signal the IEEE C37.118 client that test values are being sent in place of the real measurements.

The UR Synchrophasor Implementation defines a test mode which sends a pre-defined set of Synchrophasors out over the communication channel when the test mode function setting is enabled. In test mode, the following actions take place:

a. The Data Invalid / Test Mode bit (bit 15 in the STAT word) is set.

b. The Sim bit in all output datasets is set.

5.10.3 FORCE CONTACT INPUTS

PATH: SETTINGS ⇨⇩ TESTING ⇨⇩ FORCE CONTACT INPUTS

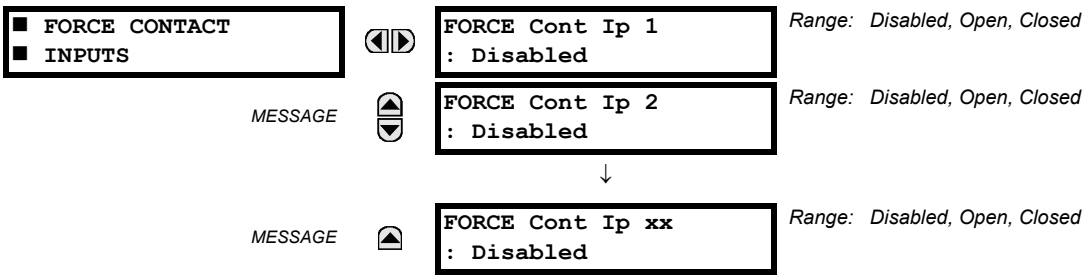

The relay contact inputs can be pre-programmed to respond to the test mode in the following ways:

- If set to "Disabled", the input remains fully operational. It is controlled by the voltage across its input terminals and can be turned on and off by external circuitry. This value should be selected if a given input must be operational during the test. This includes, for example, an input initiating the test, or being a part of a user pre-programmed test sequence.
- If set to "Open", the input is forced to report as opened (Logic 0) for the entire duration of the test mode regardless of the voltage across the input terminals.
- If set to "Closed", the input is forced to report as closed (Logic 1) for the entire duration of the test mode regardless of the voltage across the input terminals.

The force contact inputs feature provides a method of performing checks on the function of all contact inputs. Once enabled, the relay is placed into test mode, allowing this feature to override the normal function of contact inputs. The Test Mode LED will be on, indicating that the relay is in test mode. The state of each contact input may be programmed as "Disabled", "Open", or "Closed". All contact input operations return to normal when all settings for this feature are disabled.

5.10.4 FORCE CONTACT OUTPUTS

PATH: SETTINGS ⇨⇩ TESTING ⇨⇩ FORCE CONTACT OUTPUTS

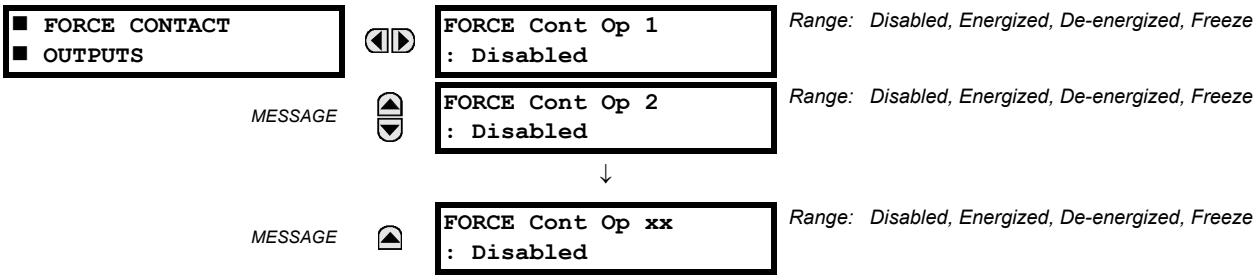

The relay contact outputs can be pre-programmed to respond to the test mode.

If set to "Disabled", the contact output remains fully operational. If operates when its control operand is logic 1 and will resets when its control operand is logic 0. If set to "Energized", the output will close and remain closed for the entire duration of the test mode, regardless of the status of the operand configured to control the output contact. If set to "De-energized", the output will open and remain opened for the entire duration of the test mode regardless of the status of the operand configured to control the output contact. If set to "Freeze", the output retains its position from before entering the test mode, regardless of the status of the operand configured to control the output contact.

These settings are applied two ways. First, external circuits may be tested by energizing or de-energizing contacts. Second, by controlling the output contact state, relay logic may be tested and undesirable effects on external circuits avoided.

Example 1: Initiating test mode through user-programmable pushbutton 1

For example, the test mode can be initiated from user-programmable pushbutton 1. The pushbutton will be programmed as "Latched" (pushbutton pressed to initiate the test, and pressed again to terminate the test). During the test, contact input 1 should remain operational, contact inputs 2 and 3 should open, and contact input 4 should close. Also, contact output 1 should freeze, contact output 2 should open, contact output 3 should close, and contact output 4 should remain fully operational. The required settings are shown below.

To enable user-programmable pushbutton 1 to initiate the test mode, make the following changes in the **SETTINGS ⇨⇩ TESTING ⇨ TEST MODE** menu: **TEST MODE FUNCTION:** enabled and **TEST MODE INITIATE:** "PUSHBUTTON 1 ON"

Make the following changes to configure the contact inputs and outputs. In the **SETTINGS ⇨⇩ TESTING ⇨⇩ FORCE CONTACT INPUTS** and **FORCE CONTACT OUTPUTS** menus, set:

FORCE Cont Ip 1: "Disabled", **FORCE Cont Ip 2:** "Open", **FORCE Cont Ip 3:** "Open", and **FORCE Cont Ip 4:** "Closed"
FORCE Cont Op 1: "Freeze", **FORCE Cont Op 2:** "De-energized", **FORCE Cont Op 3:** "Energized", and **FORCE Cont Op 4:** "Disabled"

Example 2: Initiating a test from user-programmable pushbutton 1 or through remote input 1

In this example, the test can be initiated locally from user-programmable pushbutton 1 or remotely through remote input 1. Both the pushbutton and the remote input will be programmed as "Latched". Write the following FlexLogic equation:

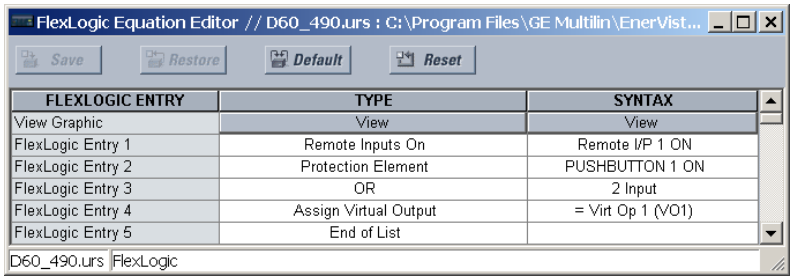

Set the user-programmable pushbutton as latching by changing **SETTINGS** ⇨ **PRODUCT SETUP** ⇨⇩ **USER-PROGRAMMABLE PUSHBUTTONS** ⇨ **USER PUSHBUTTON 1** ⇨ **PUSHBUTTON 1 FUNCTION** to “Latched”. To enable either pushbutton 1 or remote input 1 to initiate the Test mode, make the following changes in the **SETTINGS** ⇨⇩ **TESTING** ⇨ **TEST MODE** menu:

TEST MODE FUNCTION: enabled and **TEST MODE INITIATE:** “VO1”

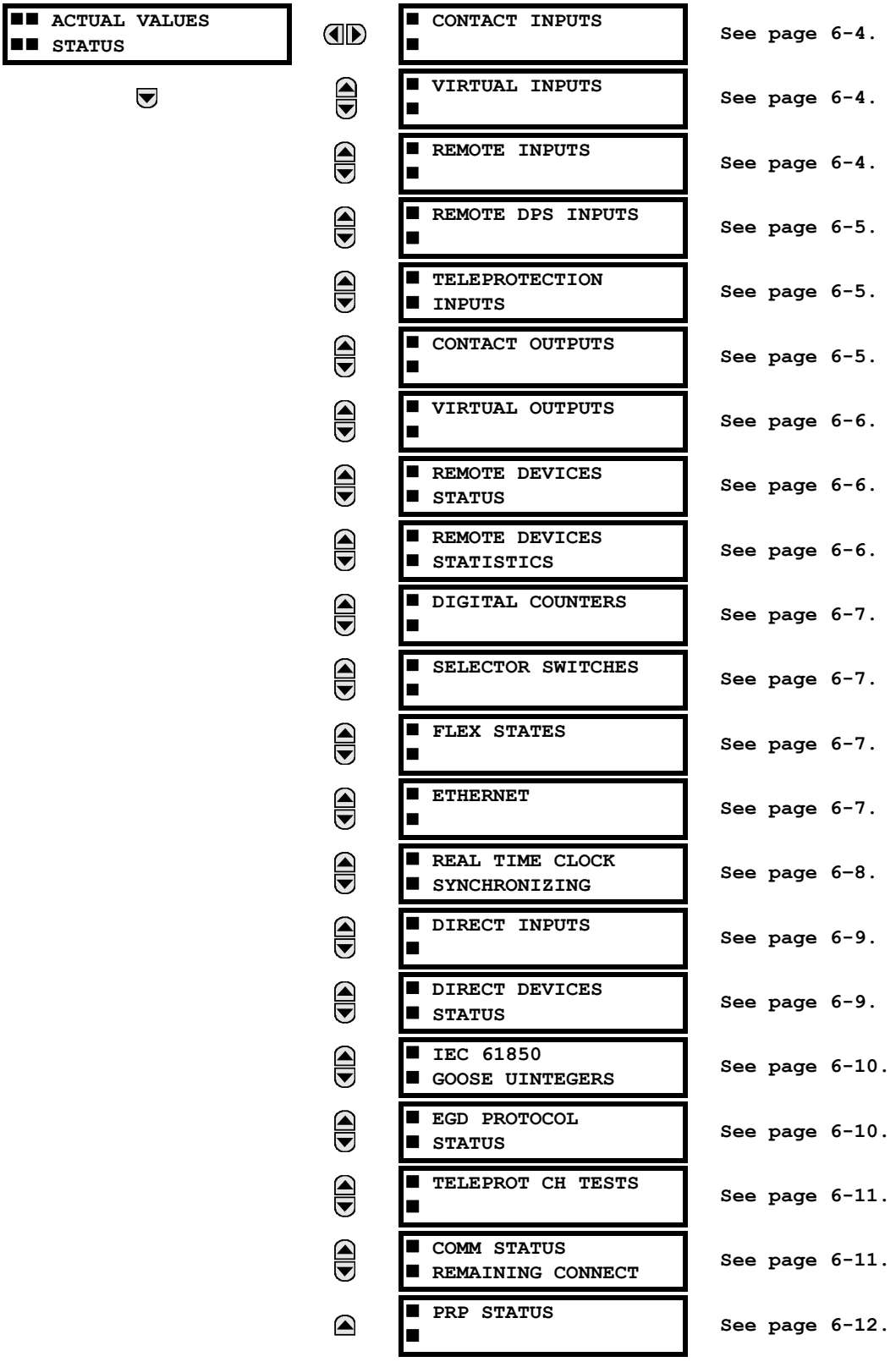
ACTUAL VALUES
STATUS
CONTACT INPUTS
See page 6-4.
VIRTUAL INPUTS
See page 6-4.
REMOTE INPUTS
See page 6-4.
REMOTE DPS INPUTS
See page 6-5.
TELEPROTECTION INPUTS
See page 6-5.
CONTACT OUTPUTS
See page 6-5.
VIRTUAL OUTPUTS
See page 6-6.
REMOTE DEVICES STATUS
See page 6-6.
REMOTE DEVICES STATISTICS
See page 6-6.
DIGITAL COUNTERS
See page 6-7.
SELECTOR SWITCHES
See page 6-7.
FLEX STATES
See page 6-7.
ETHERNET
See page 6-7.
REAL TIME CLOCK SYNCHRONIZING
See page 6-8.
DIRECT INPUTS
See page 6-9.
DIRECT DEVICES STATUS
See page 6-9.
IEC 61850 GOOSE UINTEGERS
See page 6-10.
EGD PROTOCOL STATUS
See page 6-10.
TELEPROT CH TESTS
See page 6-11.
COMM STATUS REMAINING CONNECT
See page 6-11.
PRP STATUS
See page 6-12.

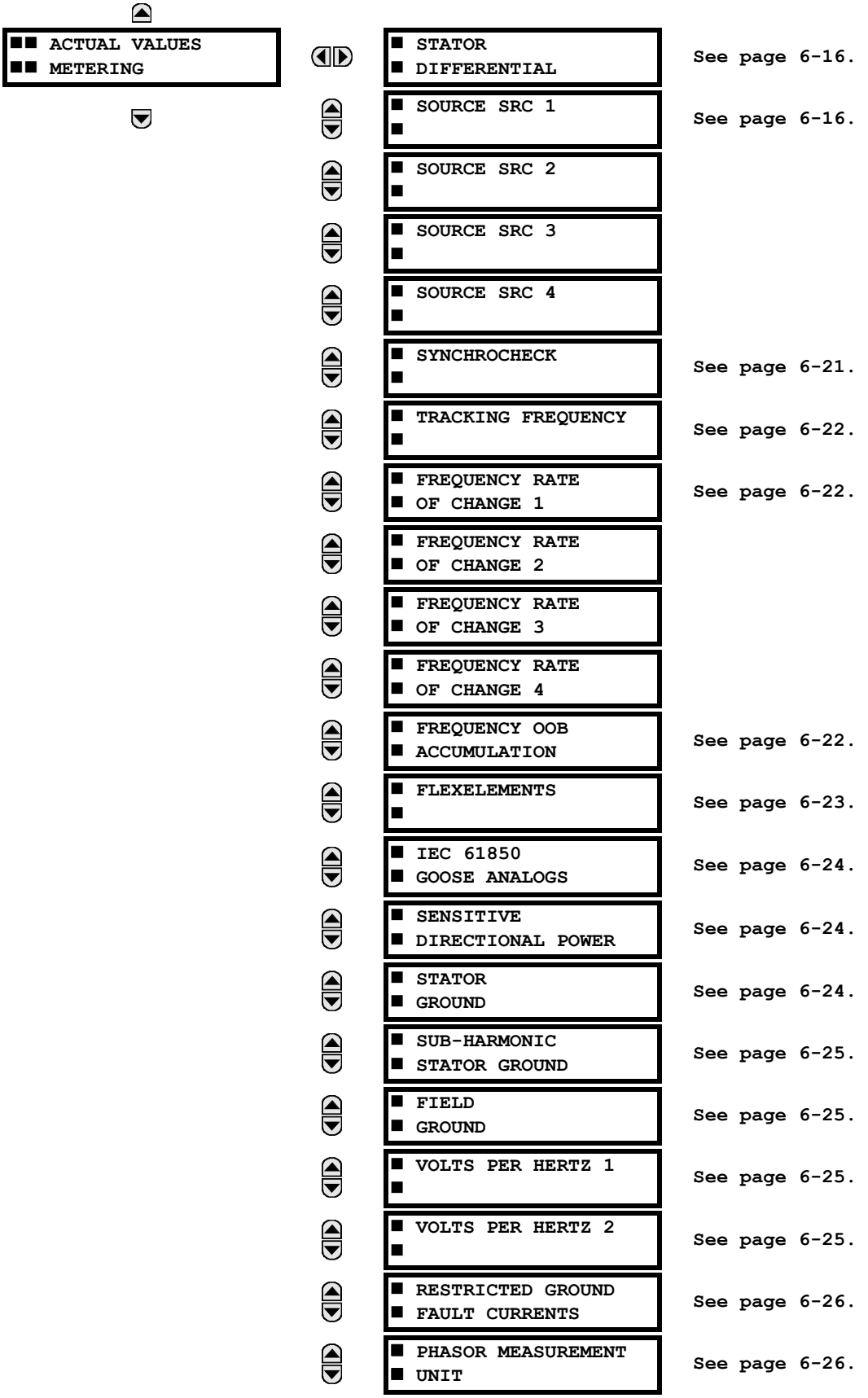
ACTUAL VALUES
METERING
STATOR DIFFERENTIAL
See page 6-16.
SOURCE SRC 1
See page 6-16.
SOURCE SRC 2
SOURCE SRC 3
SOURCE SRC 4
SYNCHROCHECK
See page 6-21.
TRACKING FREQUENCY
See page 6-22.
FREQUENCY RATE OF CHANGE 1
See page 6-22.
FREQUENCY RATE OF CHANGE 2
FREQUENCY RATE OF CHANGE 3
FREQUENCY RATE OF CHANGE 4
FREQUENCY OOB ACCUMULATION
See page 6-22.
FLEXELEMENTS
See page 6-23.
IEC 61850 GOOSE ANALOGS
See page 6-24.
SENSITIVE DIRECTIONAL POWER
See page 6-24.
STATOR GROUND
See page 6-24.
SUB-HARMONIC STATOR GROUND
See page 6-25.
FIELD GROUND
See page 6-25.
VOLTS PER HERTZ 1
See page 6-25.
VOLTS PER HERTZ 2
See page 6-25.
RESTRICTED GROUND FAULT CURRENTS
See page 6-26.
PHASOR MEASUREMENT UNIT
See page 6-26.

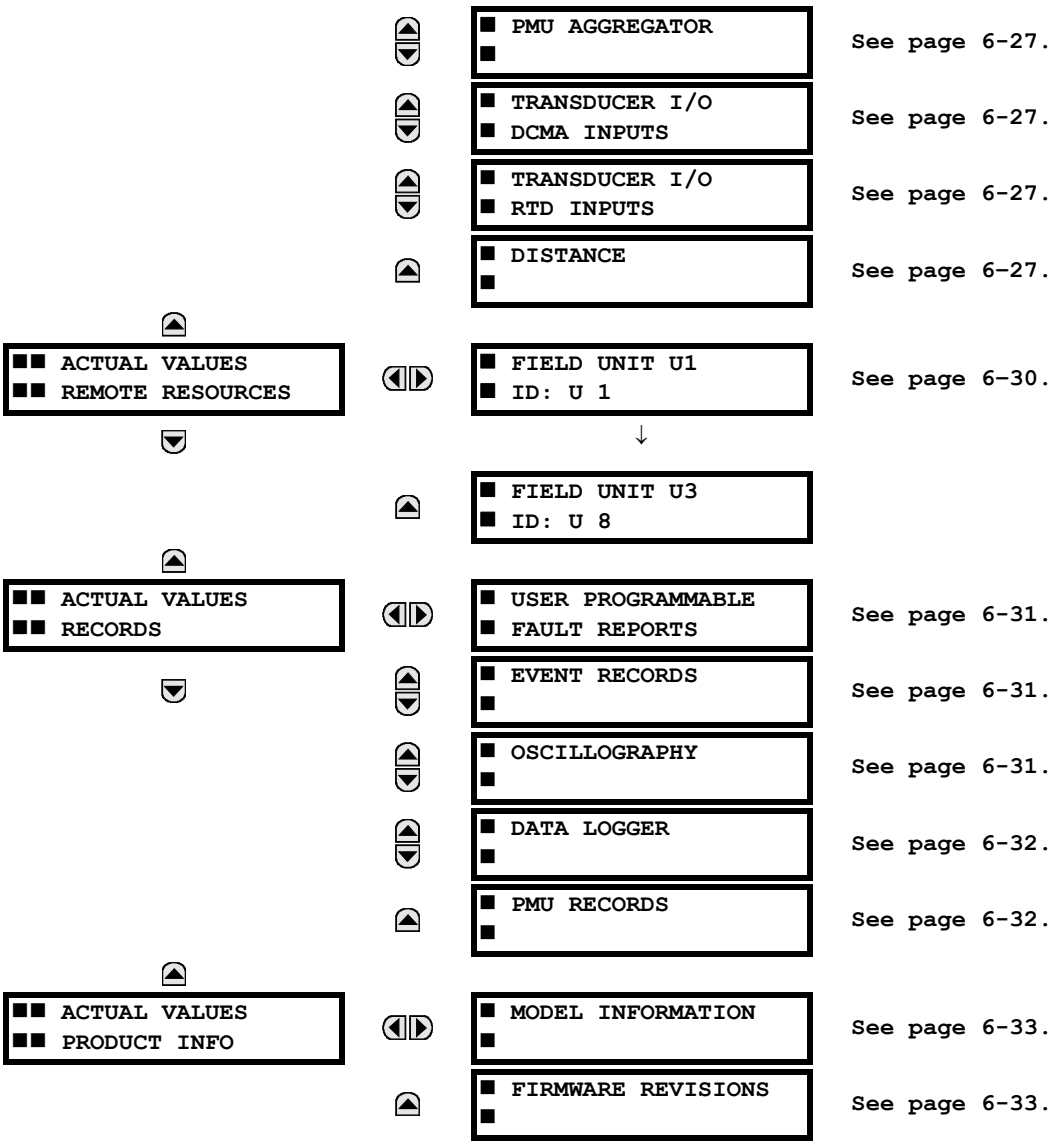
PMU AGGREGATOR
See page 6-27.
TRANSDUCER I/O
DCMA INPUTS
See page 6-27.
TRANSDUCER I/O
RTD INPUTS
See page 6-27.
DISTANCE
See page 6-27.
ACTUAL VALUES
REMOTE RESOURCES
FIELD UNIT U1
ID: U 1
See page 6-30.
FIELD UNIT U3
ID: U 8
ACTUAL VALUES
RECORDS
USER PROGRAMMABLE
FAULT REPORTS
See page 6-31.
EVENT RECORDS
See page 6-31.
OSCILLOGRAPHY
See page 6-31.
DATA LOGGER
See page 6-32.
PMU RECORDS
See page 6-32.
ACTUAL VALUES
PRODUCT INFO
MODEL INFORMATION
See page 6-33.
FIRMWARE REVISIONS
See page 6-33.

NOTE

For status reporting, 'On' represents Logic 1 and 'Off' represents Logic 0.

6.2.1 CONTACT INPUTS

PATH: ACTUAL VALUES ⇨ STATUS ⇨ CONTACT INPUTS

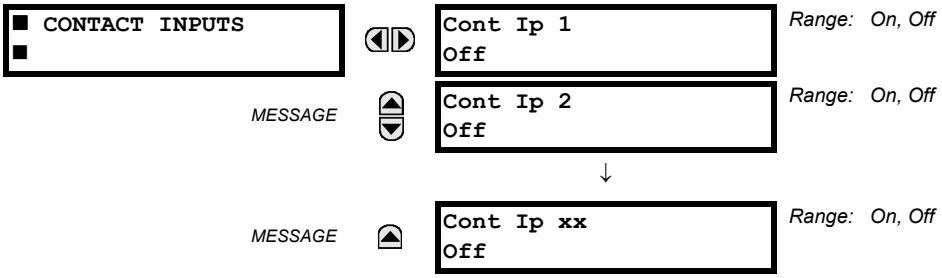

The present status of the contact inputs is shown here. The first line of a message display indicates the ID of the contact input. For example, 'Cont Ip 1' refers to the contact input in terms of the default name-array index. The second line of the display indicates the logic state of the contact input.

6.2.2 VIRTUAL INPUTS

PATH: ACTUAL VALUES ⇨ STATUS ⇨⇩ VIRTUAL INPUTS

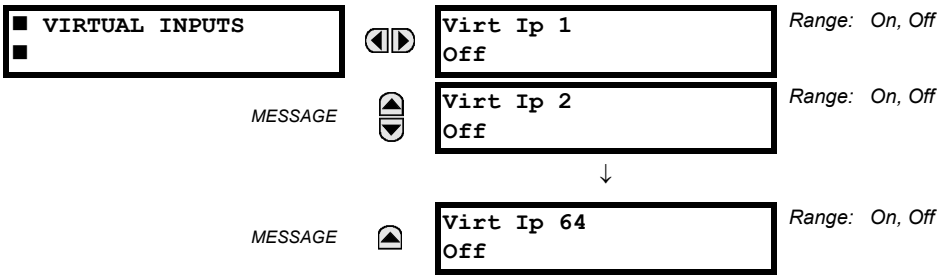

The present status of the 64 virtual inputs is shown here. The first line of a message display indicates the ID of the virtual input. For example, 'Virt Ip 1' refers to the virtual input in terms of the default name. The second line of the display indicates the logic state of the virtual input.

6.2.3 REMOTE INPUTS

PATH: ACTUAL VALUES ⇨ STATUS ⇨⇩ REMOTE INPUTS

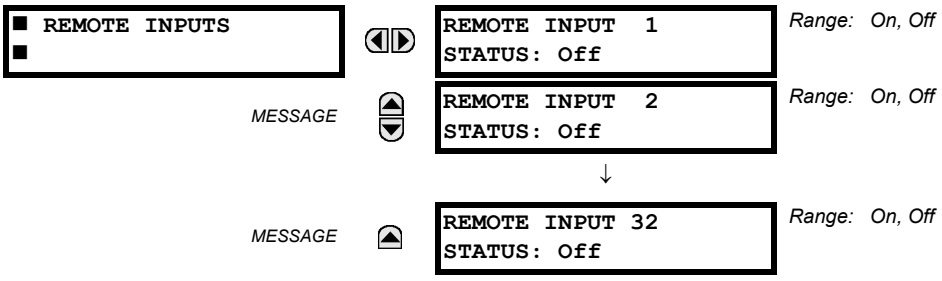

The present state of the 32 remote inputs is shown here.

The state displayed will be that of the remote point unless the remote device has been established to be "Offline" in which case the value shown is the programmed default state for the remote input.

6.2.4 REMOTE DOUBLE-POINT STATUS INPUTS

PATH: ACTUAL VALUES ⇨ STATUS ⇨⇩ REMOTE DPS INPUTS

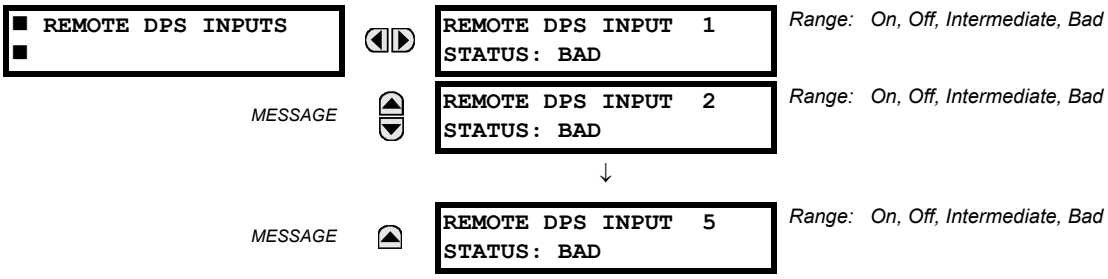

The present state of the remote double-point status inputs is shown here. The actual values indicate if the remote double-point status inputs are in the on (close), off (open), intermediate, or bad state.

6.2.5 TELEPROTECTION INPUTS

PATH: ACTUAL VALUES ⇨ STATUS ⇨⇩ TELEPROTECTION INPUTS

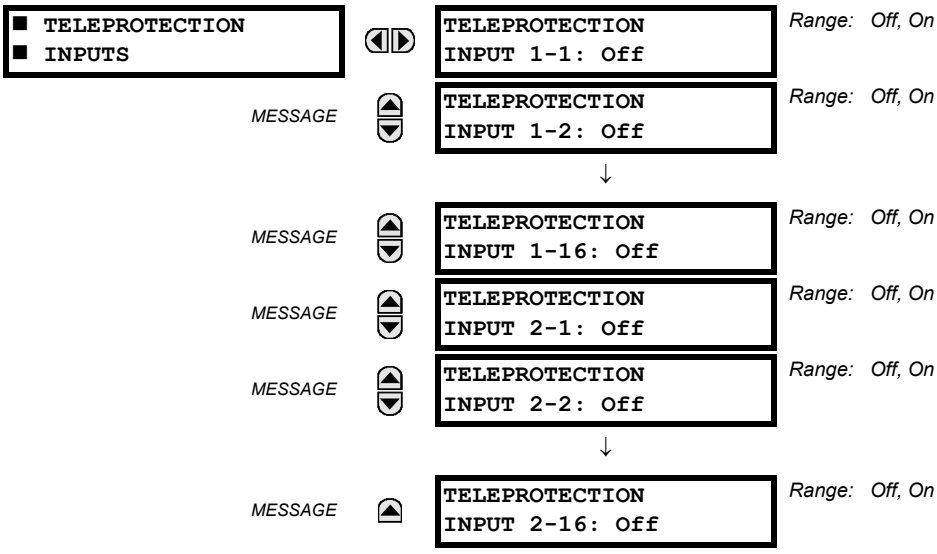

The present state of teleprotection inputs from communication channels 1 and 2 are shown here. The state displayed will be that of corresponding remote output unless the channel is declared failed.

6.2.6 CONTACT OUTPUTS

PATH: ACTUAL VALUES ⇨ STATUS ⇨⇩ CONTACT OUTPUTS

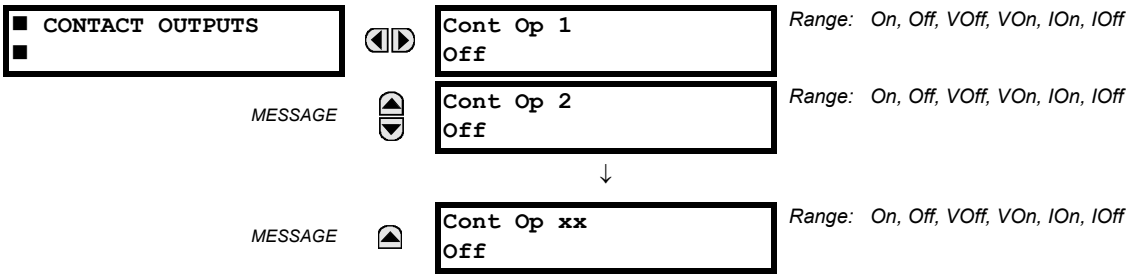

The present state of the contact outputs is shown here. The first line of a message display indicates the ID of the contact output. For example, 'Cont Op 1' refers to the contact output in terms of the default name-array index. The second line of the display indicates the logic state of the contact output.

NOTE

For form-A contact outputs, the state of the voltage and current detectors is displayed as Off, VOff, IOff, On, IOn, and VOn. For form-C contact outputs, the state is displayed as Off or On.

6.2.7 VIRTUAL OUTPUTS

PATH: ACTUAL VALUES ⇨ STATUS ⇨⇩ VIRTUAL OUTPUTS

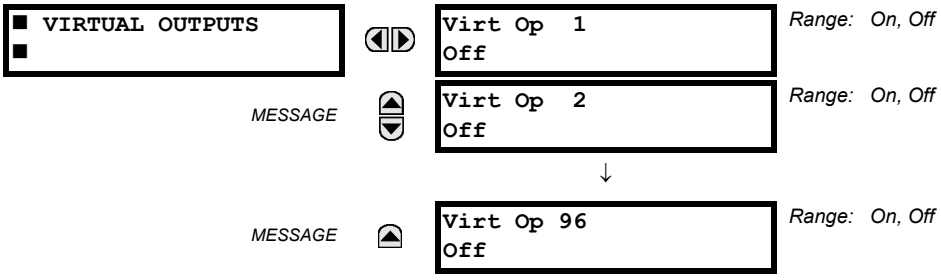

The present state of up to 96 virtual outputs is shown here. The first line of a message display indicates the ID of the virtual output. For example, 'Virt Op 1' refers to the virtual output in terms of the default name-array index. The second line of the display indicates the logic state of the virtual output, as calculated by the FlexLogic equation for that output.

6.2.8 REMOTE DEVICES

a) STATUS

PATH: ACTUAL VALUES ⇨ STATUS ⇨⇩ REMOTE DEVICES STATUS

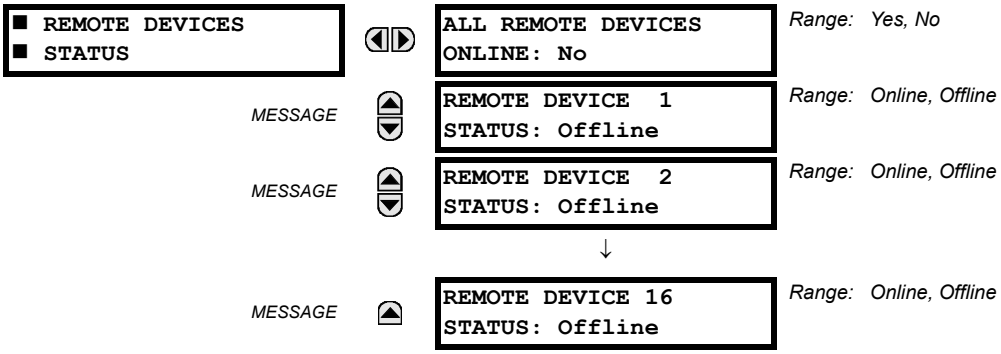

The present state of the programmed remote devices is shown here. The **ALL REMOTE DEVICES ONLINE** message indicates whether or not all programmed remote devices are online. If the corresponding state is "No", then at least one required remote device is not online.

b) STATISTICS

PATH: ACTUAL VALUES ⇨ STATUS ⇨⇩ REMOTE DEVICES STATISTICS ⇨ REMOTE DEVICE 1(16)

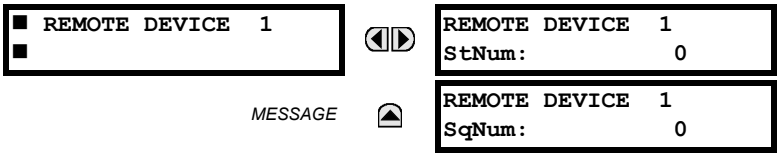

Statistical data (two types) for up to 16 programmed remote devices is shown here.

The **STNUM** number is obtained from the indicated remote device and increments whenever a change of state of at least one item occurs in the GSSE/GOOSE message. The **SQNUM** number is obtained from the indicated remote device and increments whenever a GSSE/GOOSE message, without a state change, is sent. When the GSSE/GOOSE message trasmits a state change, the **SQNUM** resets to 0. This number rolls over to zero when a count of 4,294,967,295 is incremented.

6.2.9 DIGITAL COUNTERS

PATH: ACTUAL VALUES ⇨ STATUS ⇨⇩ DIGITAL COUNTERS ⇨ DIGITAL COUNTERS Counter 1(8)

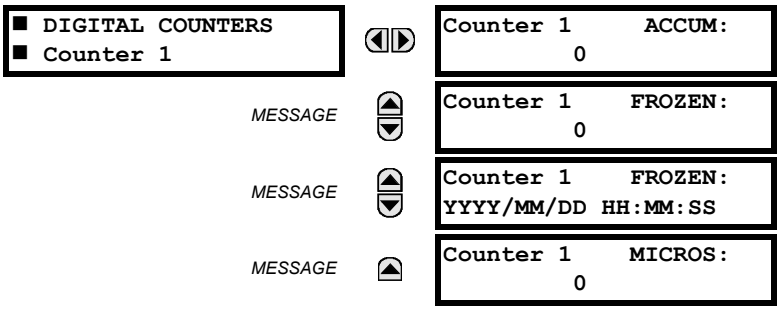

The present status of the eight digital counters is shown here. The status of each counter, with the user-defined counter name, includes the accumulated and frozen counts (the count units label will also appear). Also included, is the date and time stamp for the frozen count. The **COUNTER 1 MICROS** value refers to the microsecond portion of the time stamp.

6.2.10 SELECTOR SWITCHES

PATH: ACTUAL VALUES ⇨ STATUS ⇨⇩ SELECTOR SWITCHES

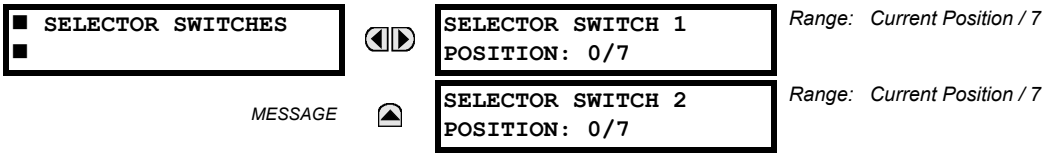

The display shows both the current position and the full range. The current position only (an integer from 0 through 7) is the actual value.

6.2.11 FLEX STATES

PATH: ACTUAL VALUES ⇨ STATUS ⇨⇩ FLEX STATES

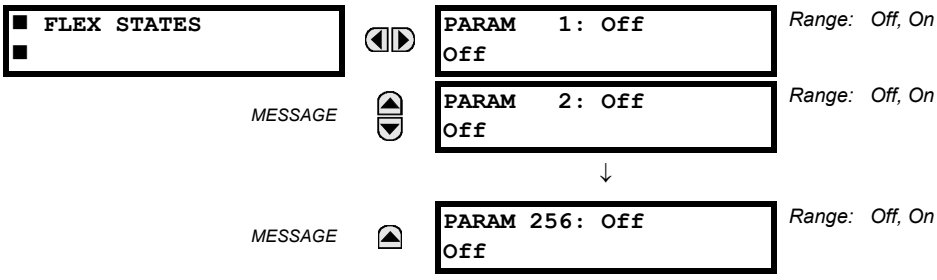

There are 256 FlexState™ bits available. The second line value indicates the state of the given FlexState bit.

6.2.12 ETHERNET

PATH: ACTUAL VALUES ⇨ STATUS ⇨⇩ ETHERNET

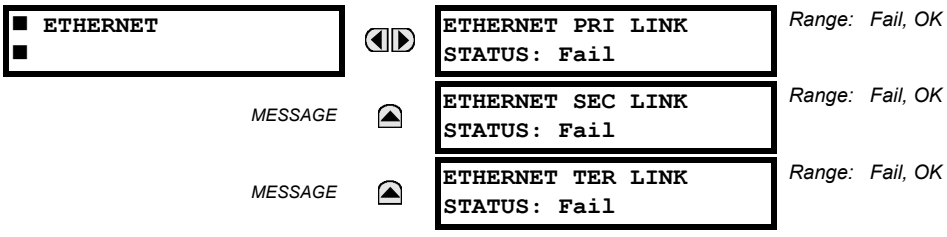

These values indicate the status of the first, second, and third Ethernet links.

6.2.13 REAL TIME CLOCK SYNCHRONIZING

PATH: ACTUAL VALUES ⇨⇩ STATUS ⇨⇩ REAL TIME CLOCK SYNCHRONIZING

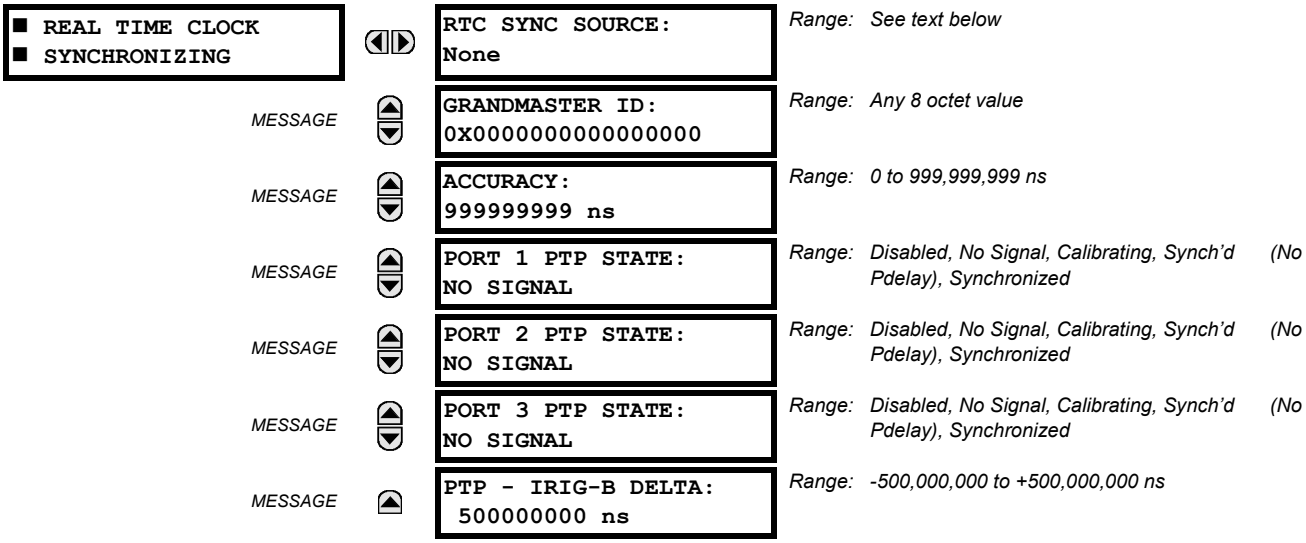

The **RTC SYNC SOURCE** actual value is the time synchronizing source the relay is using at present. Possible sources are: Port 1 PTP Clock, Port 2 PTP Clock, Port 3 PTP Clock, IRIG-B, SNTP, and None. An actual value displays when the relay includes the IEEE 1588 software option.

The **GRANDMASTER ID** is the grandmasterIdentity code being received from the present PTP grandmaster, if any. When the relay is not using any PTP grandmaster, this actual value is zero. The grandmasterIdentity code is specified by PTP to be globally unique, so one can always know which clock is grandmaster in a system with multiple grandmaster-capable clocks.

Accuracy is the estimated maximum time error at present in the RTC, considering the quality information imbedded in the received time signal. The value 999,999,999 indicates that the magnitude of the estimated error is one second or more, or that the error cannot be estimated.

PORT 1...3 PTP STATE is the present state of the port's PTP clock. The PTP clock state is:

- **DISABLED** is the port's function setting is Disabled,
- **NO SIGNAL** if enabled but no signal from an active master has been found and selected,
- **CALIBRATING** if an active master has been selected but lock is not at present established,
- **SYNCH'D (NO PDELAY)** if the port is synchronized, but the peer delay mechanism is non-operational, and
- **SYNCHRONIZED** if synchronized.

PTP - IRIG-B DELTA is the time difference, measured in nanoseconds, between the fractional seconds portion of the time being received via PTP and that being received via IRIG-B. A positive value indicates that PTP time is fast compared to IRIG-B time.

6.2.14 DIRECT INPUTS

PATH: ACTUAL VALUES ⇨ STATUS ⇨⇩ DIRECT INPUTS

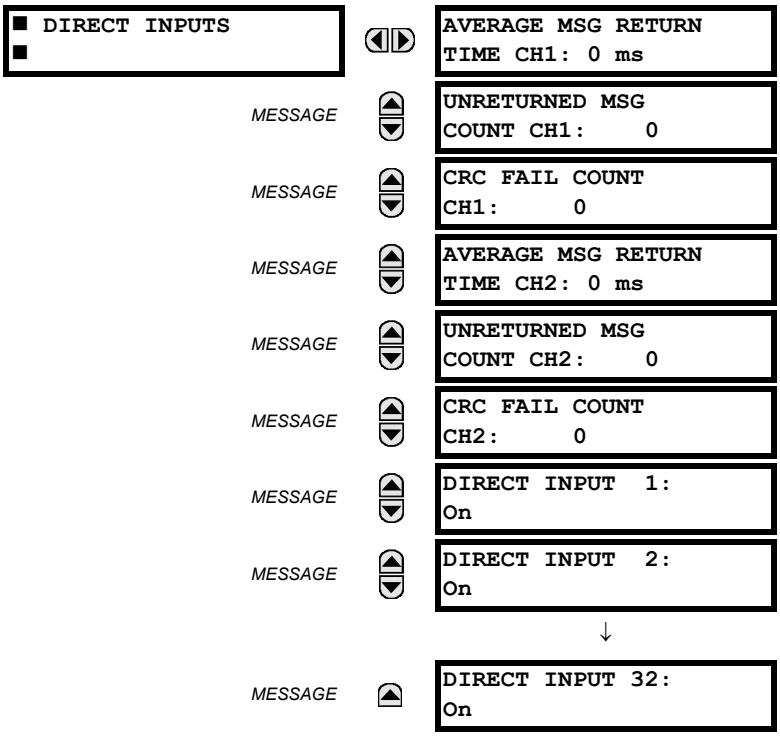

The **AVERAGE MSG RETURN TIME** is the time taken for direct output messages to return to the sender in a direct input/output ring configuration (this value is not applicable for non-ring configurations). This is a rolling average calculated for the last ten messages. There are two return times for dual-channel communications modules.

The **UNRETURNED MSG COUNT** values (one per communications channel) count the direct output messages that do not make the trip around the communications ring. The **CRC FAIL COUNT** values (one per communications channel) count the direct output messages that have been received but fail the CRC check. High values for either of these counts may indicate on a problem with wiring, the communication channel, or one or more relays. The **UNRETURNED MSG COUNT** and **CRC FAIL COUNT** values can be cleared using the **CLEAR DIRECT I/O COUNTERS** command.

The **DIRECT INPUT 1** to **DIRECT INPUT (32)** values represent the state of each direct input.

6.2.15 DIRECT DEVICES STATUS

PATH: ACTUAL VALUES ⇨ STATUS ⇨⇩ DIRECT DEVICES STATUS

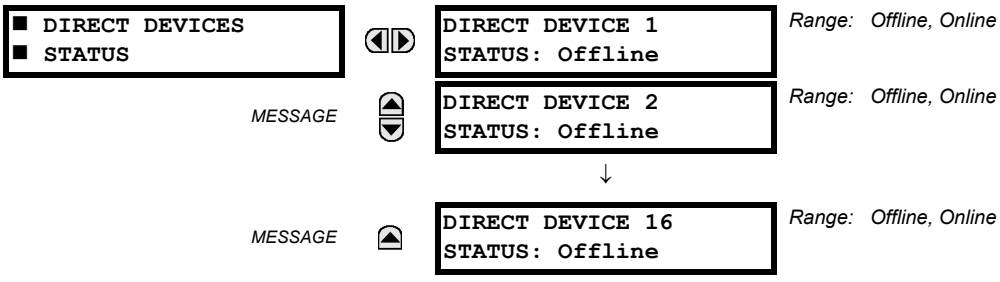

These actual values represent the state of direct devices 1 through 16.

6.2.16 IEC 61850 GOOSE INTEGERS

PATH: ACTUAL VALUES ⇨⇩ STATUS ⇨⇩ IEC 61850 GOOSE UINTEGERS

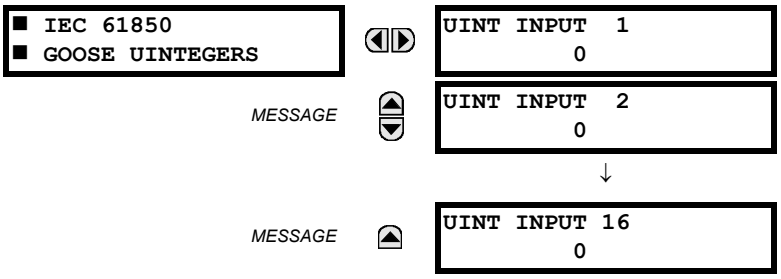

The G60 Generator Protection System is provided with optional IEC 61850 communications capability. This feature is specified as a software option at the time of ordering. See the Order Codes section in chapter 2 for details.

The IEC 61850 GGIO5 integer input data points are displayed in this menu. The GGIO5 integer data values are received via IEC 61850 GOOSE messages sent from other devices.

6.2.17 EGD PROTOCOL STATUS

a) FAST EXCHANGE

PATH: ACTUAL VALUES ⇨ STATUS ⇨⇩ EGD PROTOCOL STATUS ⇨ PRODUCER STATUS ⇨ FAST EXCHANGE 1

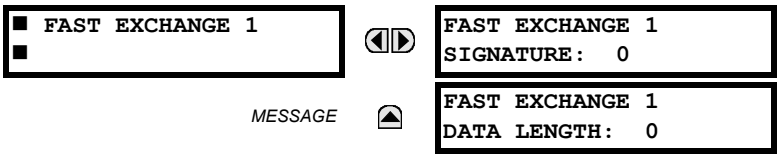

These values provide information that may be useful for debugging an EGD network. The EGD signature and packet size for the fast EGD exchange is displayed.

b) SLOW EXCHANGE

PATH: ACTUAL VALUES ⇨ STATUS ⇨⇩ EGD PROTOCOL STATUS ⇨ PRODUCER STATUS ⇨⇩ SLOW EXCHANGE 1(2)

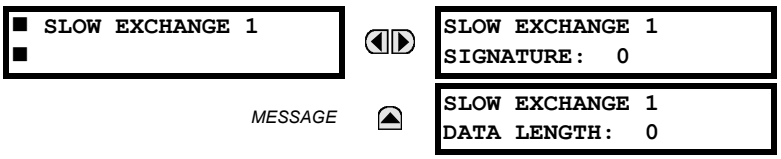

These values provide information that may be useful for debugging an EGD network. The EGD signature and packet size for the slow EGD exchanges are displayed.

6.2.18 TELEPROTECTION CHANNEL TESTS

PATH: ACTUAL VALUES ⇨ STATUS ⇨⇩ TELEPROT CH TESTS

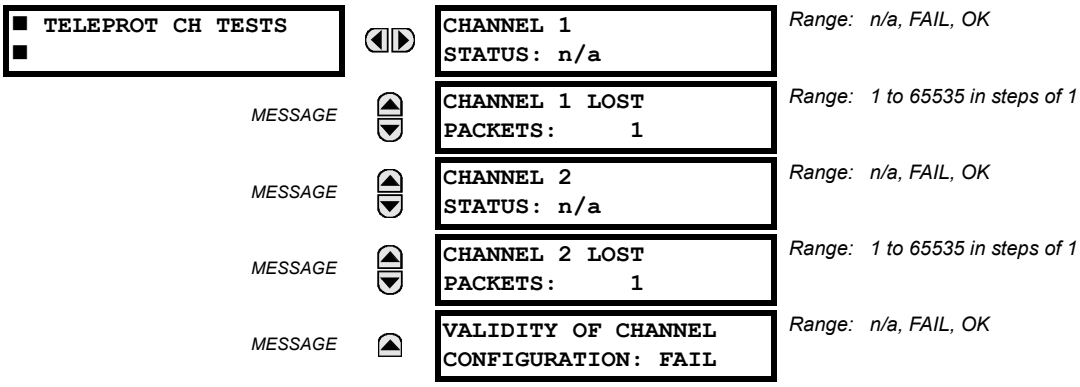

The status information for two channels is shown here.

- **CHANNEL 1 STATUS**: This represents the receiver status of each channel. If the value is "OK", teleprotection is enabled and data is being received from the remote terminal; If the value is "FAIL", teleprotection enabled and data is not being received from the remote terminal. If "n/a", teleprotection is disabled.
- **CHANNEL 1 LOST PACKETS**: Data is transmitted to the remote terminals in data packets at a rate of two packets per cycle. The number of lost packets represents data packets lost in transmission; this count can be reset to 0 through the COMMANDS ⇨⇩ CLEAR RECORDS menu.
- **VALIDITY OF CHANNEL CONFIGURATION**: This value displays the current state of the communications channel identification check, and hence validity. If a remote relay ID does not match the programmed ID at the local relay, the "FAIL" message will be displayed. The "N/A" value appears if the local relay ID is set to a default value of "0", the channel is failed, or if the teleprotection inputs/outputs are not enabled.

6.2.19 REMAINING CONNECTION STATUS

PATH: ACTUAL VALUES ⇨ STATUS ⇨⇩ COMM STATUS REMAINING CONNECT

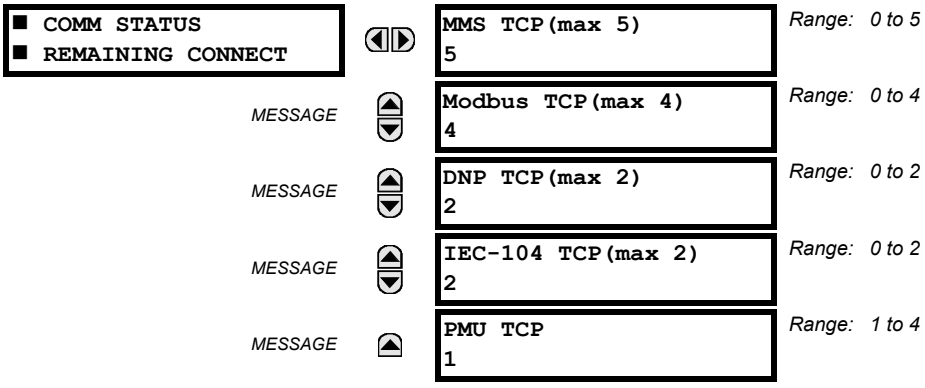

These values specify the remaining number of TCP connections still available for each protocol. The display depends on the options applicable to your device, for example the PMU entry does not display when not applicable. Each time a connection is used, the remaining number of connections decrements. When released, the remaining number of connections increments. If no connection is made over the specific protocol, the number equals the maximum number available for the specific protocol.

For example, the maximum number of Modbus TCP connections is 4. Once an EnerVista session is opened on a computer connected to the UR over Ethernet, the Modbus TCP status shows 3. If the EnerVista application is closed, the Modbus TCP status shows 4.

MMS TCP — The number of IEC 61850 connections remaining.

PMU TCP — The maximum number of PMU TCP connections matches the number of aggregators. The maximum number of aggregators for the N60 is 4. The maximum number for the C60 is 2. The maximum number is 1 for other products with a PMU. The remaining number of aggregators displays here.

6.2.20 PARALLEL REDUNDANCY PROTOCOL (PRP) STATUS

The Parallel Redundancy Protocol (PRP) defines a redundancy protocol for high availability in substation automation networks.

PATH: ACTUAL VALUES ⇨ STATUS ⇨⇩ PRP STATUS

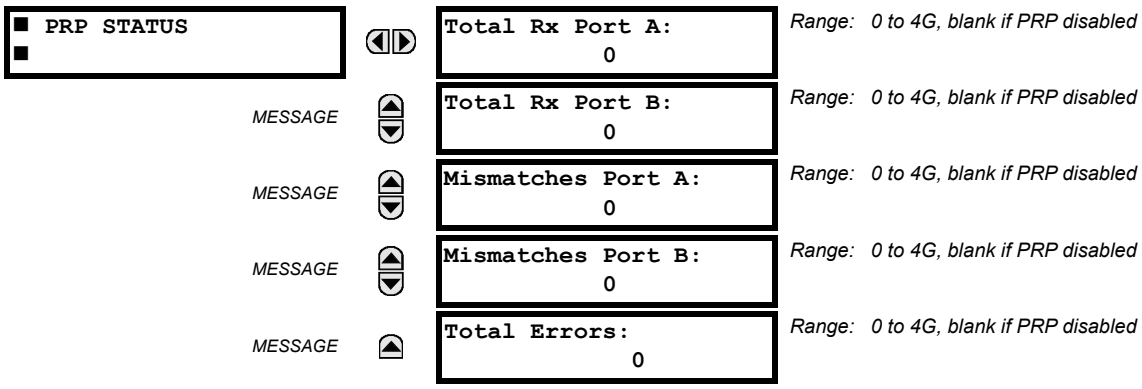

The G60 Generator Protection System is provided with optional PRP capability. This feature is specified as a software option at the time of ordering. See the *Order Codes* section in chapter 2 for details.

TOTAL RECEIVED PORT A is a counter for total messages received (either from DANPs or from SANs) on Port A.

TOTAL RECEIVED PORT B is a counter for total messages received (either from DANPs or from SANs) on Port B.

MISMATCHES PORT A is a counter for total messages received with an error on Port A (PRP frame, but port received through and LAN ID in the frame do not match).

MISMATCHES PORT B is a counter for total messages received with an error on Port B (PRP frame, but port received through and LAN ID in the frame do not match).

TOTAL ERRORS is a counter for total messages received with an error (bad port code, frame length too short).

a) UR CONVENTION FOR MEASURING POWER AND ENERGY

The following figure illustrates the conventions established for use in UR-series relays.

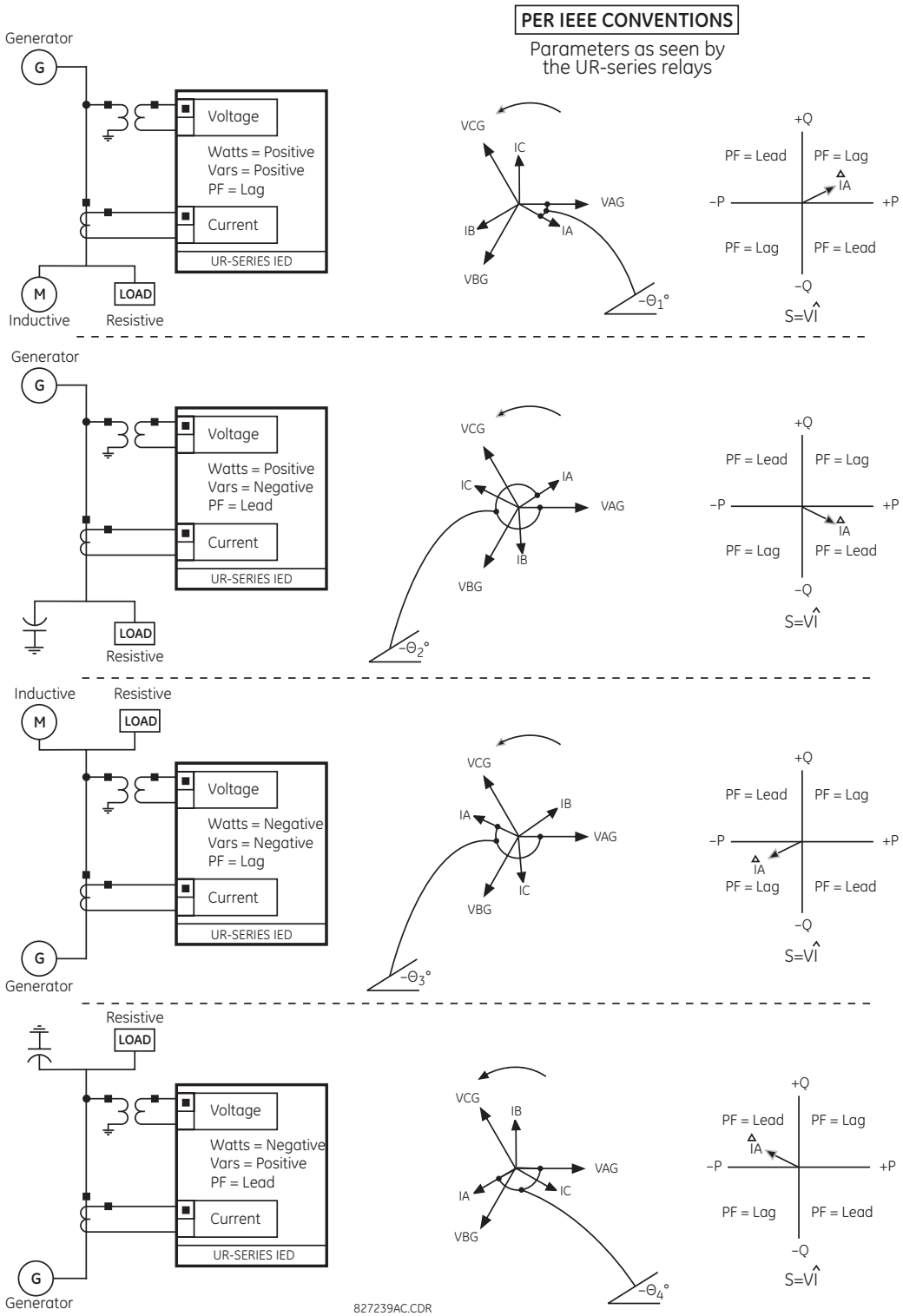

Figure 6–1: FLOW DIRECTION OF SIGNED VALUES FOR WATTS AND VARS

b) UR CONVENTION FOR MEASURING PHASE ANGLES

All phasors calculated by UR-series relays and used for protection, control and metering functions are rotating phasors that maintain the correct phase angle relationships with each other at all times.

For display and oscillography purposes, all phasor angles in a given relay are referred to an AC input channel pre-selected by the **SETTINGS** ⇨⇩ **SYSTEM SETUP** ⇨⇩ **POWER SYSTEM** ⇨⇩ **FREQUENCY AND PHASE REFERENCE** setting. This setting defines a particular AC signal source to be used as the reference.

The relay will first determine if any "Phase VT" bank is indicated in the source. If it is, voltage channel VA of that bank is used as the angle reference. Otherwise, the relay determines if any "Aux VT" bank is indicated; if it is, the auxiliary voltage channel of that bank is used as the angle reference. If neither of the two conditions is satisfied, then two more steps of this hierarchical procedure to determine the reference signal include "Phase CT" bank and "Ground CT" bank.

If the AC signal pre-selected by the relay upon configuration is not measurable, the phase angles are not referenced. The phase angles are assigned as positive in the leading direction, and are presented as negative in the lagging direction, to more closely align with power system metering conventions. This is illustrated below.

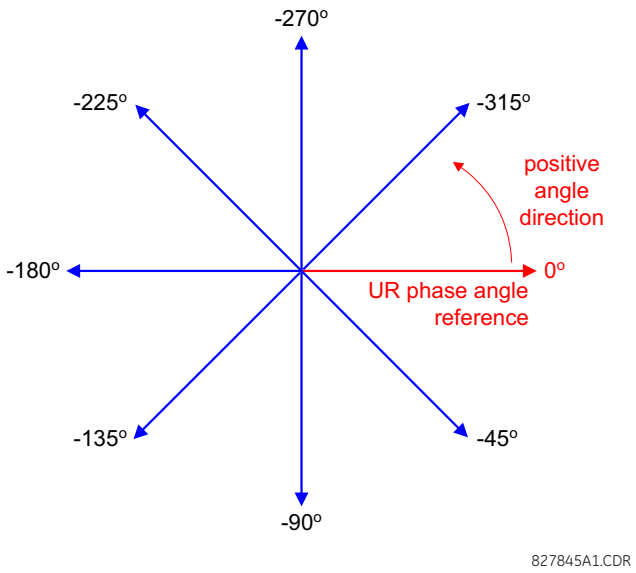

Figure 6–2: UR PHASE ANGLE MEASUREMENT CONVENTION

c) UR CONVENTION FOR MEASURING SYMMETRICAL COMPONENTS

The UR-series of relays calculate voltage symmetrical components for the power system phase A line-to-neutral voltage, and symmetrical components of the currents for the power system phase A current. Owing to the above definition, phase angle relations between the symmetrical currents and voltages stay the same irrespective of the connection of instrument transformers. This is important for setting directional protection elements that use symmetrical voltages.

For display and oscillography purposes the phase angles of symmetrical components are referenced to a common reference as described in the previous sub-section.

WYE-CONNECTED INSTRUMENT TRANSFORMERS:

- ABC phase rotation:

$$V\_0 = \frac{1}{3}(V_{AG} + V_{BG} + V_{CG})$$

$$V\_1 = \frac{1}{3}(V_{AG} + aV_{BG} + a^2V_{CG})$$

$$V\_2 = \frac{1}{3}(V_{AG} + a^2V_{BG} + aV_{CG})$$

- ACB phase rotation:

$$V\_0 = \frac{1}{3}(V_{AG} + V_{BG} + V_{CG})$$

$$V\_1 = \frac{1}{3}(V_{AG} + a^2V_{BG} + aV_{CG})$$

$$V\_2 = \frac{1}{3}(V_{AG} + aV_{BG} + a^2V_{CG})$$

The above equations apply to currents as well.

DELTA-CONNECTED INSTRUMENT TRANSFORMERS:

- ABC phase rotation:

$$V\_0 = \text{N/A}$$
$$V\_1 = \frac{1\angle -30^\circ}{3\sqrt{3}}(V_{AB} + aV_{BC} + a^2V_{CA})$$
$$V\_2 = \frac{1\angle 30^\circ}{3\sqrt{3}}(V_{AB} + a^2V_{BC} + aV_{CA})$$

- ACB phase rotation:

$$V\_0 = \text{N/A}$$
$$V\_1 = \frac{1\angle 30^\circ}{3\sqrt{3}}(V_{AB} + a^2V_{BC} + aV_{CA})$$
$$V\_2 = \frac{1\angle -30^\circ}{3\sqrt{3}}(V_{AB} + aV_{BC} + a^2V_{CA})$$

The zero-sequence voltage is not measurable under the Delta connection of instrument transformers and is defaulted to zero. The table below shows an example of symmetrical components calculations for the ABC phase rotation.

Table 6–1: SYMMETRICAL COMPONENTS CALCULATION EXAMPLE

SYSTEM VOLTAGES, SEC. V *						VT CONN.	RELAY INPUTS, SEC. V			SYMM. COMP, SEC. V		
V_{AG}	V_{BG}	V_{CG}	V_{AB}	V_{BC}	V_{CA}		F5AC	F6AC	F7AC	V_0	V_1	V_2
13.9 ∠0°	76.2 ∠–125°	79.7 ∠–250°	84.9 ∠–313°	138.3 ∠–97°	85.4 ∠–241°	WYE	13.9 ∠0°	76.2 ∠–125°	79.7 ∠–250°	19.5 ∠–192°	56.5 ∠–7°	23.3 ∠–187°
UNKNOWN (only V_1 and V_2 can be determined)			84.9 ∠0°	138.3 ∠–144°	85.4 ∠–288°	DELTA	84.9 ∠0°	138.3 ∠–144°	85.4 ∠–288°	N/A	56.5 ∠–54°	23.3 ∠–234°

* The power system voltages are phase-referenced – for simplicity – to *VAG* and *VAB*, respectively. This, however, is a relative matter. It is important to remember that the G60 displays are always referenced as specified under **SETTINGS ⇨⇩ SYSTEM SETUP ⇨⇩ POWER SYSTEM ⇨⇩ FREQUENCY AND PHASE REFERENCE**.

The example above is illustrated in the following figure.

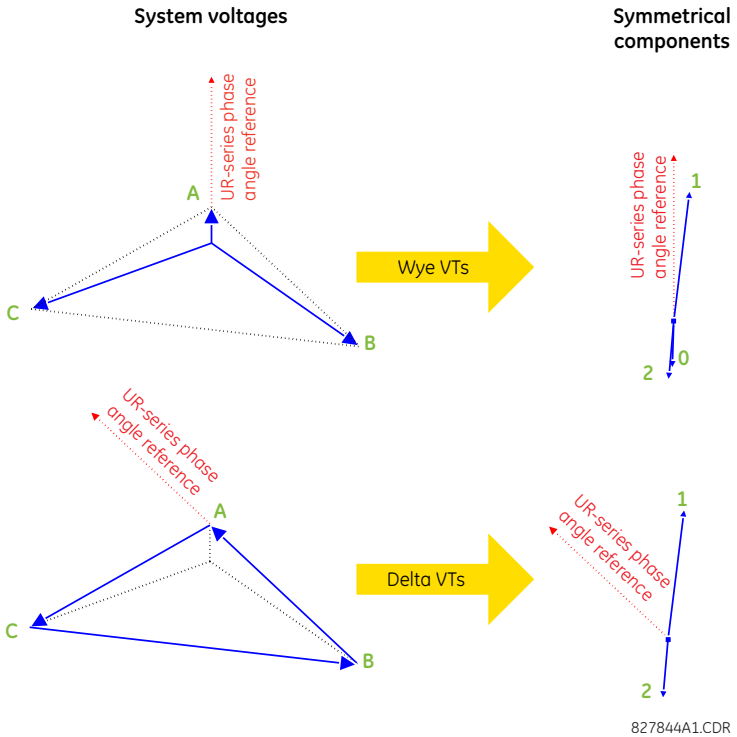

Figure 6–3: MEASUREMENT CONVENTION FOR SYMMETRICAL COMPONENTS

6.3.2 STATOR DIFFERENTIAL

PATH: ACTUAL VALUES ⇨⇩ METERING ⇨⇩ STATOR DIFFERENTIAL

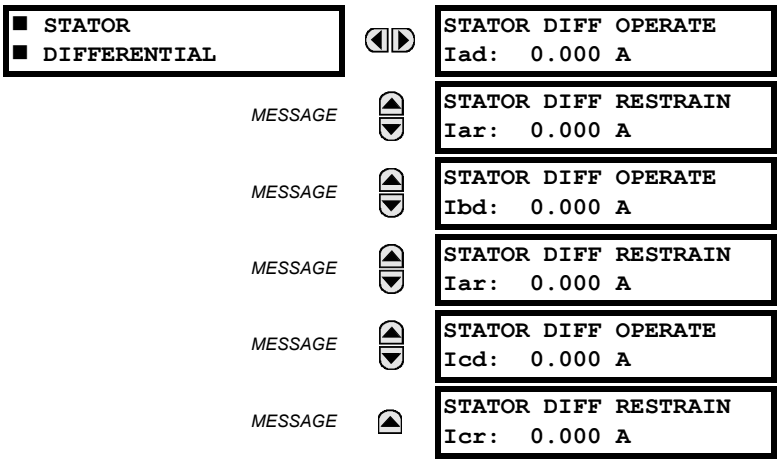

The phasors of differential and restraint currents are displayed in primary amperes.

6.3.3 SOURCES

a) MAIN MENU

PATH: ACTUAL VALUES ⇨⇩ METERING ⇨⇩ SOURCE SRC1

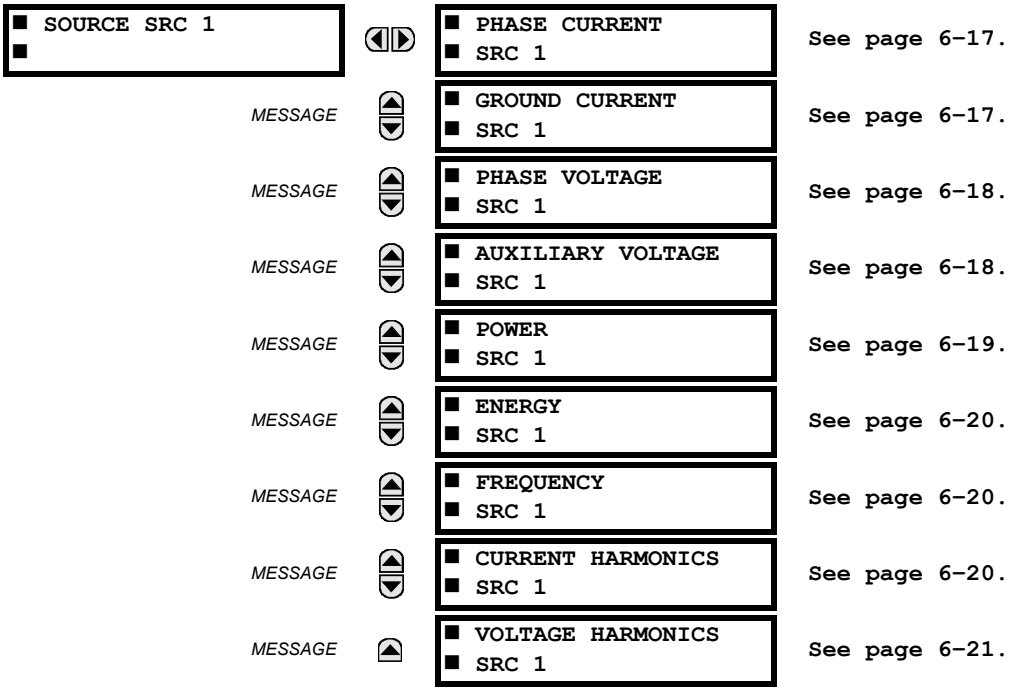

This menu displays the metered values available for each source.

Metered values presented for each source depend on the phase and auxiliary VTs and phase and ground CTs assignments for this particular source. For example, if no phase VT is assigned to this source, then any voltage, energy, and power values will be unavailable.

b) PHASE CURRENT METERING

PATH: ACTUAL VALUES ⇨⇩ METERING ⇨ SOURCE SRC 1 ⇨ PHASE CURRENT

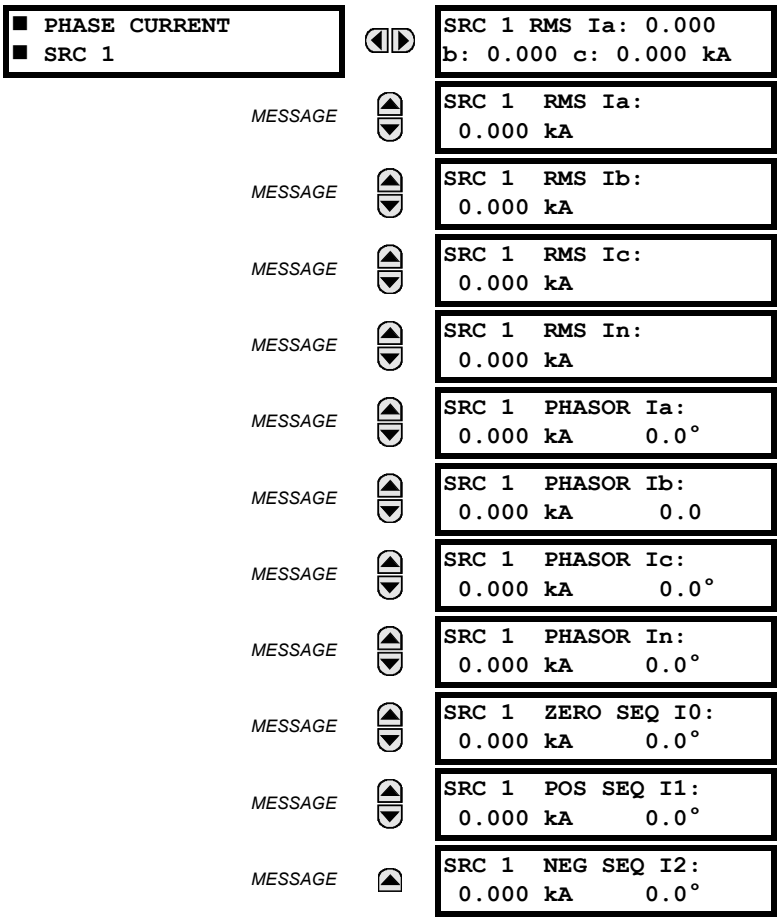

The metered phase current values are displayed in this menu. The "SRC 1" text will be replaced by whatever name was programmed by the user for the associated source (see SETTINGS ⇨⇩ SYSTEM SETUP ⇨⇩ SIGNAL SOURCES).

c) GROUND CURRENT METERING

PATH: ACTUAL VALUES ⇨⇩ METERING ⇨ SOURCE SRC 1 ⇨⇩ GROUND CURRENT

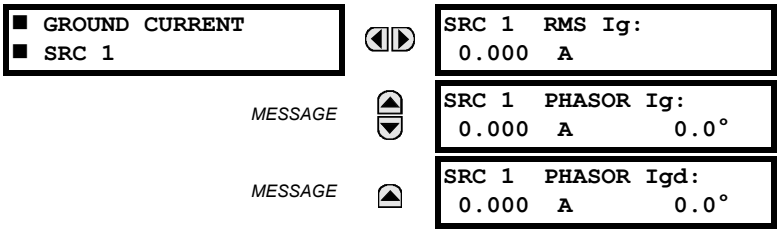

The metered ground current values are displayed in this menu. The "SRC 1" text will be replaced by whatever name was programmed by the user for the associated source (see SETTINGS ⇨⇩ SYSTEM SETUP ⇨⇩ SIGNAL SOURCES).

d) PHASE VOLTAGE METERING

PATH: ACTUAL VALUES ⇨⇩ METERING ⇨ SOURCE SRC 1 ⇨ PHASE VOLTAGE

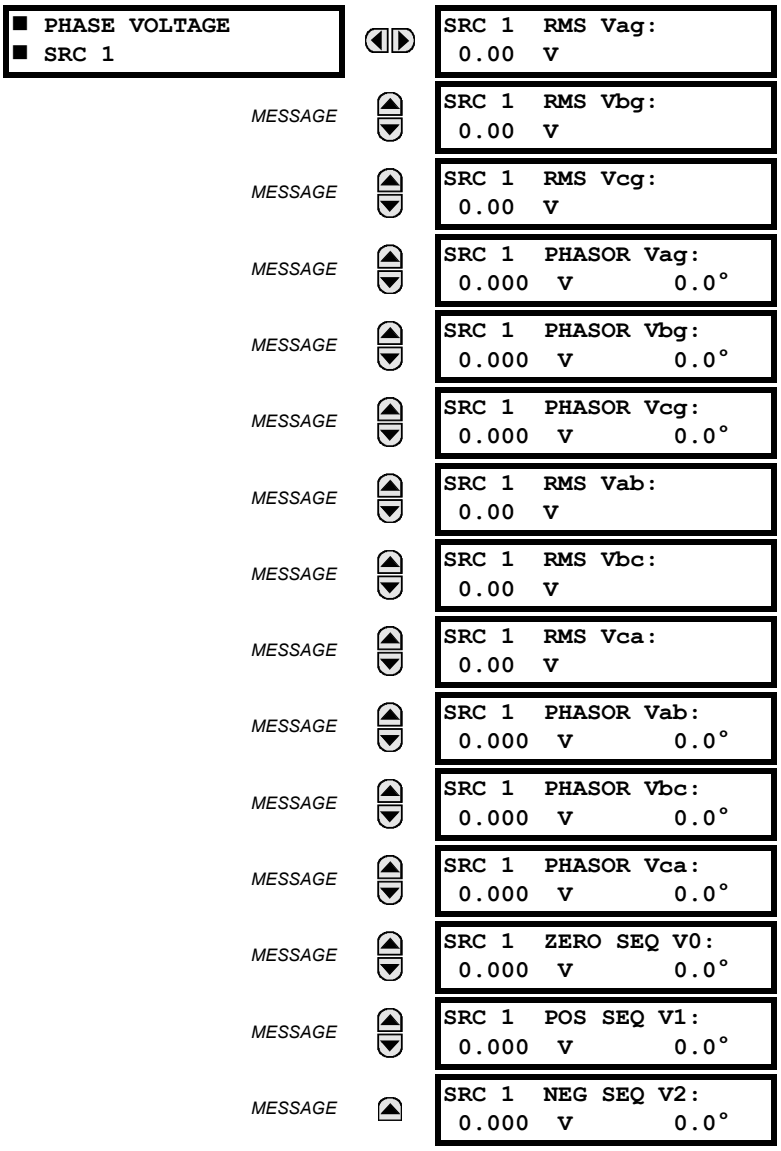

The metered phase voltage values are displayed in this menu. The "SRC 1" text will be replaced by whatever name was programmed by the user for the associated source (see SETTINGS ⇨⇩ SYSTEM SETUP ⇨⇩ SIGNAL SOURCES).

e) AUXILIARY VOLTAGE METERING

PATH: ACTUAL VALUES ⇨⇩ METERING ⇨ SOURCE SRC 1 ⇨⇩ AUXILIARY VOLTAGE

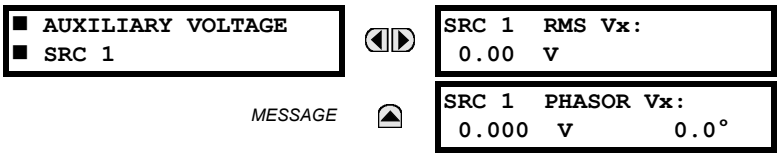

The metered auxiliary voltage values are displayed in this menu. The "SRC 1" text will be replaced by whatever name was programmed by the user for the associated source (see SETTINGS ⇨⇩ SYSTEM SETUP ⇨⇩ SIGNAL SOURCES).

f) POWER METERING

PATH: ACTUAL VALUES ⇨⇩ METERING ⇨ SOURCE SRC 1 ⇨⇩ POWER

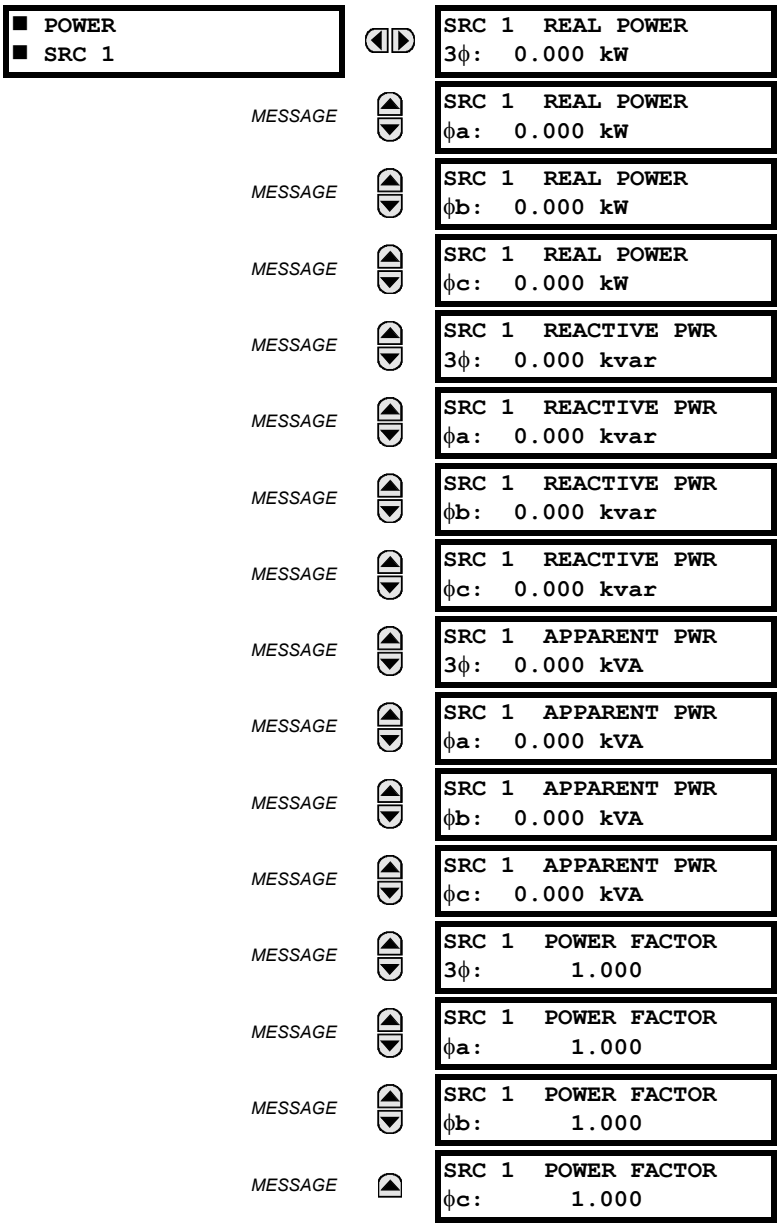

The metered values for real, reactive, and apparent power, as well as power factor, are displayed in this menu. The "SRC 1" text is replaced by whatever name was programmed by the user for the associated source (see SETTINGS ⇨⇩ SYSTEM SETUP ⇨⇩ SIGNAL SOURCES).

When VTs are configured in wye, the G60 calculates power in each phase and three-phase power is measured as

$$S = V_A \times \hat{I}_A + V_B \times \hat{I}_B + V_C \times \hat{I}_C \quad \textbf{(EQ 6.1)}$$

When VTs are configured in delta, the G60 does not calculate power in each phase and three-phase power is measured as

$$S = V_{AB} \times \hat{I}_A + V_{CB} \times \hat{I}_C \quad \textbf{(EQ 6.2)}$$

where

S is the apparent power

V_A, V_B, V_C, I_A, I_B, I_C are phase voltage and phase current phasors

V_{AB} and V_{CB} are phase-to-phase voltage phasors

Î is the conjugate of I

g) ENERGY METERING

PATH: ACTUAL VALUES ⇨⇩ METERING ⇨ SOURCE SRC 1 ⇨⇩ ENERGY

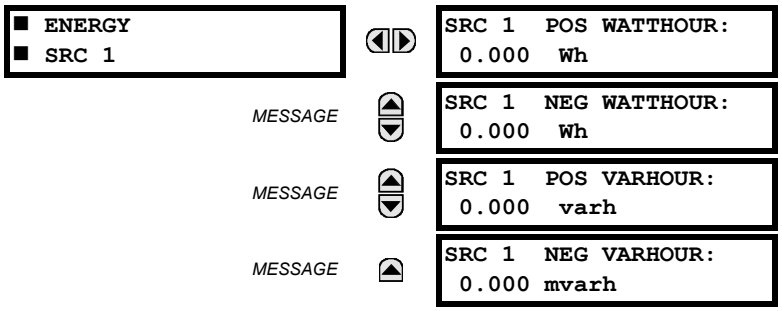

The metered values for real and reactive energy are displayed in this menu. The "SRC 1" text will be replaced by whatever name was programmed by the user for the associated source (see SETTINGS ⇨⇩ SYSTEM SETUP ⇨⇩ SIGNAL SOURCES). Because energy values are accumulated, these values should be recorded and then reset immediately prior to changing CT or VT characteristics.

h) FREQUENCY METERING

PATH: ACTUAL VALUES ⇨⇩ METERING ⇨ SOURCE SRC 1 ⇨⇩ FREQUENCY

The metered frequency values are displayed in this menu. The "SRC 1" text will be replaced by whatever name was programmed by the user for the associated source (see SETTINGS ⇨⇩ SYSTEM SETUP ⇨⇩ SIGNAL SOURCES).

SOURCE FREQUENCY is measured via software-implemented zero-crossing detection of an AC signal. The signal is either a Clarke transformation of three-phase voltages or currents, auxiliary voltage, or ground current as per source configuration (see the SYSTEM SETUP ⇨⇩ POWER SYSTEM settings). The signal used for frequency estimation is low-pass filtered. The final frequency measurement is passed through a validation filter that eliminates false readings due to signal distortions and transients.

i) CURRENT HARMONICS AND THD METERING

PATH: ACTUAL VALUES ⇨⇩ METERING ⇨ SOURCE SRC 1 ⇨⇩ CURRENT HARMONICS

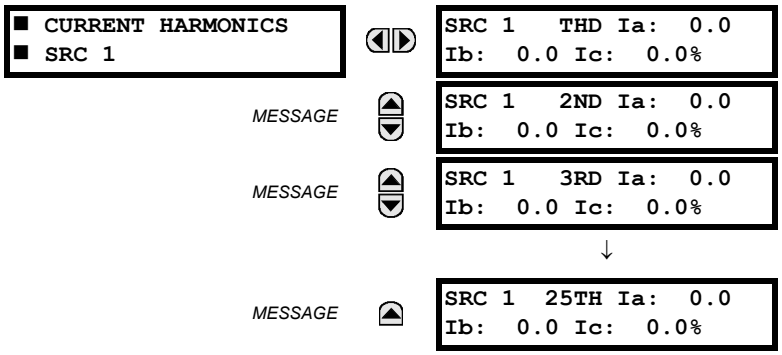

The metered current harmonics values are displayed in this menu. The "SRC 1" text will be replaced by whatever name was programmed by the user for the associated source (see SETTINGS ⇨⇩ SYSTEM SETUP ⇨⇩ SIGNAL SOURCES). Current harmonics are measured for each source for the total harmonic distortion (THD) and 2nd to 25th harmonics per phase.

j) VOLTAGE HARMONICS AND THD METERING

PATH: ACTUAL VALUES ⇨⇩ METERING ⇨ SOURCE SRC 1 ⇨⇩ VOLTAGE HARMONICS

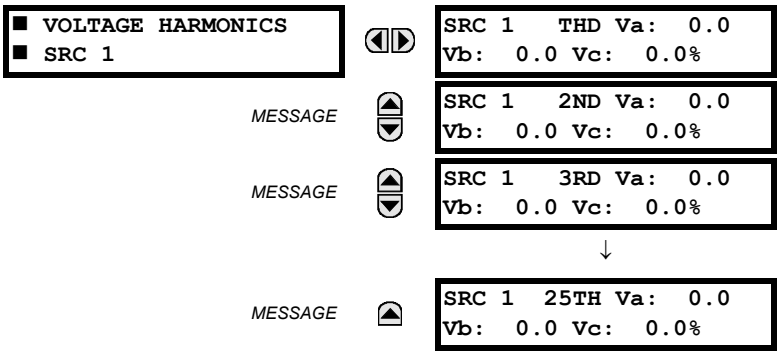

The metered voltage harmonics values are displayed in this menu. The “SRC 1” text will be replaced by the programmed name for the associated source (see the SETTINGS ⇨⇩ SYSTEM SETUP ⇨⇩ SIGNAL SOURCES menu).

To extract the 2nd to 25th voltage harmonics, each harmonic is computed on a per-phase basis, where:

$N = 64$ is the number of samples per cycle
$\omega_0 = 2\pi f$ is the angular frequency based on the system frequency (50 or 60 Hz)
$k = 1, 2, \ldots, N - 1$ is the index over one cycle for the Fast Fourier Transform (FFT)
m is the last sample number for the sliding window
$h = 1, 2, \ldots, 25$ is the harmonic number

The short-time Fourier transform is applied to the unfiltered signal:

$$F_{real}(m,h) = \frac{2}{N}\sum_{k}(f(m-k)\cdot\cos(h\cdot\omega_0\cdot t(k)))$$
$$F_{imag}(m,h) = \frac{2}{N}\sum_{k}(f(m-k)\cdot\sin(h\cdot\omega_0\cdot t(k))) \quad \text{(EQ 6.3)}$$
$$F_{ampl}(m,h) = \sqrt{F_{real}(m,h)^2 + F_{imag}(m,h)^2}$$

The harmonics are a percentage of the fundamental signal obtained as a ratio of harmonic amplitude to fundamental amplitude multiplied by 100%. The total harmonic distortion (THD) is the ratio of the total harmonic content to the fundamental:

$$\text{THD} = \sqrt{F_2^2 + F_3^2 + \ldots + F_{25}^2} \quad \text{(EQ 6.4)}$$

NOTE

Voltage harmonics are calculated only for Wye connected phase VTs. Ensure the SYSTEM SETUP ⇨ AC INPUTS ⇨⇩ VOLTAGE BANK F5 ⇨⇩ PHASE VT XX CONNECTION setting is “Wye” to enable voltage harmonics metering.

6.3.4 SYNCHROCHECK

PATH: ACTUAL VALUES ⇨⇩ METERING ⇨⇩ SYNCHROCHECK ⇨ SYNCHROCHECK 1(4)

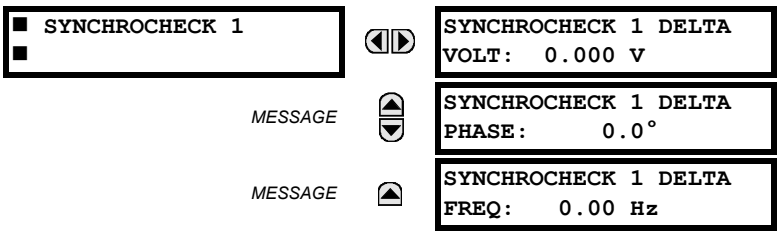

If a synchrocheck function setting is "Disabled", the corresponding actual values menu item is not displayed.

6.3.5 TRACKING FREQUENCY

PATH: ACTUAL VALUES ⇨⇩ METERING ⇨⇩ TRACKING FREQUENCY

The tracking frequency is displayed here. The frequency is tracked based on the selection of the reference source with the **FREQUENCY AND PHASE REFERENCE** setting in the SETTINGS ⇨⇩ SYSTEM SETUP ⇨⇩ POWER SYSTEM menu. See the Power System section of chapter 5 for details.

6.3.6 FREQUENCY RATE OF CHANGE

PATH: ACTUAL VALUES ⇨⇩ METERING ⇨⇩ FREQUENCY RATE OF CHANGE 1(4)

The metered frequency rate of change for the frequency rate of change elements is shown here.

6.3.7 FREQUENCY OUT-OF-BAND ACCUMULATION

PATH: ACTUAL VALUES ⇨⇩ METERING ⇨⇩ FREQUENCY OOB ACCUMULATION

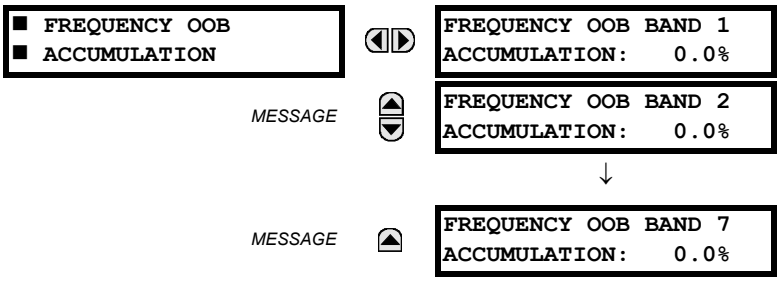

The frequency out-of-band accumulation metered values are displayed to the nearest percent as a ratio of the present accumulation to the user-specified limit. Note that this value can be greater than 100%.

PATH: ACTUAL VALUES ⇨⇩ METERING ⇨⇩ FLEXELEMENTS ⇨ FLEXELEMENT 1(16)

The operating signals for the FlexElements are displayed in pu values using the following definitions of the base units.

Table 6–2: FLEXELEMENT BASE UNITS (Sheet 1 of 2)

DCmA	BASE = maximum value of the **DCMA INPUT MAX** setting for the two transducers configured under the +IN and –IN inputs.
FIELD CURRENT	I_{BASE} = maximum value setting defined for the specific transducer input configured
FIELD GROUND CURRENT	I_{BASE} = 5 mA
FIELD GROUND FAULT LOCATION	BASE = 100%
FIELD GROUND INJECTED VOLTAGE	V_{BASE} = 15 V
FIELD GROUND RESISTANCE	R_{BASE} = 250 KΩ
FIELD VOLTAGE	V_{BASE} = 500 V
FREQUENCY	f_{BASE} = 1 Hz
FREQUENCY RATE OF CHANGE	df/dt_{BASE} = 1 Hz/s
PHASE ANGLE	φ_{BASE} = 360 degrees (see the UR angle referencing convention)
POWER FACTOR	PF_{BASE} = 1.00
RTDs	BASE = 100°C
SENSITIVE DIR POWER (Sns Dir Power)	P_{BASE} = maximum value of $3 \times V_{BASE} \times I_{BASE}$ for the +IN and –IN inputs of the sources configured for the sensitive power directional element(s).
SOURCE CURRENT	I_{BASE} = maximum nominal primary RMS value of the +IN and –IN inputs
SOURCE ENERGY (Positive and Negative Watthours, Positive and Negative Varhours)	E_{BASE} = 10000 MWh or MVAh, respectively
SOURCE POWER	P_{BASE} = maximum value of $V_{BASE} \times I_{BASE}$ for the +IN and –IN inputs
SOURCE VOLTAGE	V_{BASE} = maximum nominal primary RMS value of the +IN and –IN inputs
STATOR DIFFERENTIAL CURRENT (Stator Diff Iar, Ibr, and Icr)	I_{BASE} = maximum primary RMS value of the +IN and –IN inputs (CT primary for source currents, and bus reference primary current for bus differential currents)
STATOR GROUND 3RD HARMONIC VOLTAGES (Stator Gnd Vn/V0 3rd)	V_{BASE} = Primary auxiliary voltage of the **STATOR GROUND SOURCE**
STATOR GROUND RESISTANCE	R_{BASE} = 10 KΩ
STATOR GROUND SUB-HARMONIC VOLTAGE	V_{BASE} = nominal secondary voltage of auxiliary VT for the stator ground source
STATOR GROUND SUB-HARMONIC CURRENT	I_{BASE} = ground CT primary current of stator ground source
STATOR RESTRAINING CURRENT (Stator Diff Iad, Ibd, and Icd)	I_{BASE} = maximum primary RMS value of the +IN and –IN inputs (CT primary for source currents, and bus reference primary current for bus differential currents)
SYNCHROCHECK (Max Delta Volts)	V_{BASE} = maximum primary RMS value of all the sources related to the +IN and –IN inputs
VOLTS PER HERTZ	BASE = 1.00 pu

Table 6–2: FLEXELEMENT BASE UNITS (Sheet 2 of 2)

Z_{BASE}	Z_{BASE} = PhaseVTSecondary / PhaseCTSecondary, where PhaseVTSecondary and PhaseCTSecondary are the secondary nominal voltage and the secondary nominal current of the distance source. In case multiple CT inputs are summed as one source current and mapped as the distance source, use the PhaseCTSecondary value from the CT with the highest primary nominal current. Distance source is specified in setting under **SETTINGS > GROUPED ELEMENTS > SETTING GROUP 1(6) > DISTANCE**. PhaseVTSecondary and PhaseCTSecondary are specified in setting under **SETTINGS > SYSTEM SETUP > AC INPUTS**.

6.3.9 IEC 61580 GOOSE ANALOG VALUES

PATH: ACTUAL VALUES ⇨⇩ METERING ⇨⇩ IEC 61850 GOOSE ANALOGS

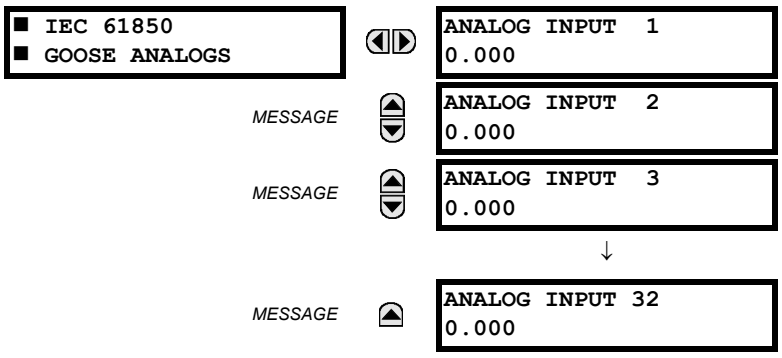

The G60 is provided with optional IEC 61850 communications capability. This feature is specified as a software option at the time of ordering. See the Order Codes section of chapter 2 for details.

The IEC 61850 GGIO3 analog input data points are displayed in this menu. The GGIO3 analog data values are received via IEC 61850 GOOSE messages sent from other devices.

6.3.10 SENSITIVE DIRECTIONAL POWER

PATH: ACTUAL VALUES ⇨⇩ METERING ⇨⇩ SENSITIVE DIRECTIONAL POWER ⇨ DIRECTIONAL POWER 1(2)

The effective operating quantities of the sensitive directional power elements are displayed here. The display may be useful to calibrate the feature by compensating the angular errors of the CTs and VTs with the use of the **RCA** and **CALIBRATION** settings.

6.3.11 STATOR GROUND

PATH: ACTUAL VALUES ⇨⇩ METERING ⇨⇩ STATOR GROUND

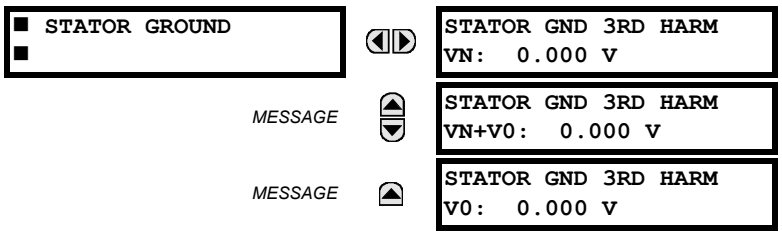

Magnitudes of the third harmonic components of the machine neutral point voltage (VN), the zero-sequence voltage at the machine terminals (V0), and in the vector sum of the neutral point voltage and zero-sequence voltage (VN + V0) in primary volts are available for display. The values are calculated for a signal source specified under the stator ground settings menu.

These readings may be useful when selecting a pickup and supervision setting for the 100% stator ground and third harmonic neutral undervoltage protection elements.

6.3.12 SUB-HARMONIC STATOR GROUND

PATH: ACTUAL VALUES ⇨⇩ METERING ⇨⇩ SUB-HARMONIC STATOR GROUND

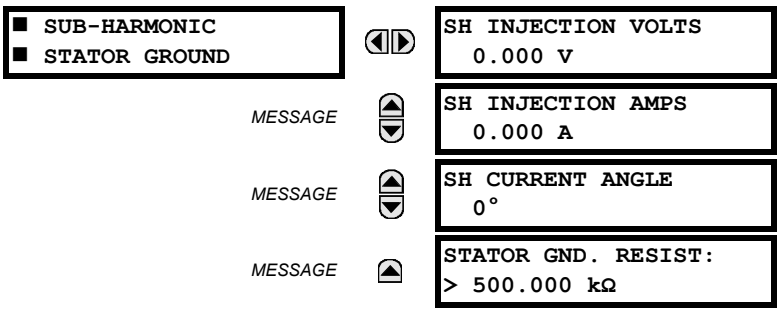

Actual values related to sub-harmonic stator ground protection are displayed in this menu.

6.3.13 FIELD GROUND

PATH: ACTUAL VALUES ⇨⇩ METERING ⇨⇩ FIELD GROUND

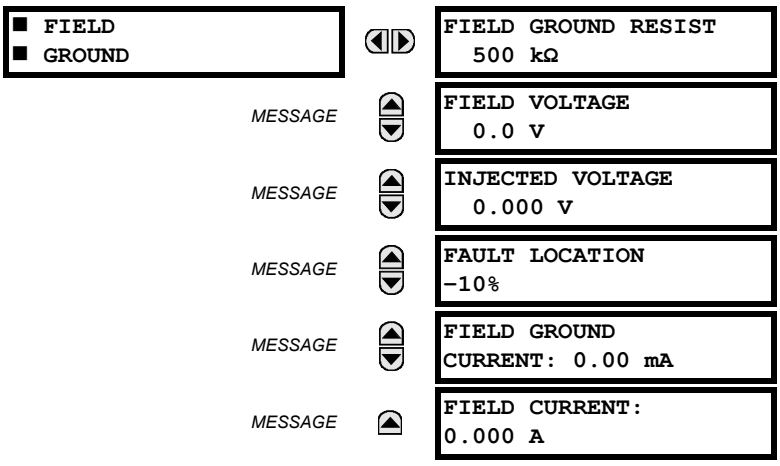

Actual values related to field ground protection are displayed in this menu.

6.3.14 VOLTS PER HERTZ

PATH: ACTUAL VALUES ⇨⇩ METERING ⇨⇩ VOLTS PER HERTZ 1(2)

The volts per hertz actual values are displayed in this menu.

6.3.15 RESTRICTED GROUND FAULT

PATH: ACTUAL VALUES ⇨⇩ METERING ⇨⇩ RESTRICTED GROUND FAULT CURRENTS ⇨ RESTRICTED GROUND FAULT 1(6)

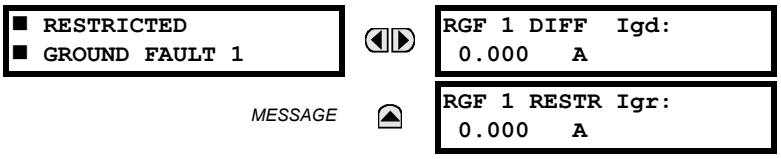

The differential and restraint current values for the restricted ground fault element are displayed in this menu.

6.3.16 PHASOR MEASUREMENT UNIT

PATH: ACTUAL VALUES ⇨⇩ METERING ⇨⇩ PHASOR MEASUREMENT UNIT ⇨ PMU 1

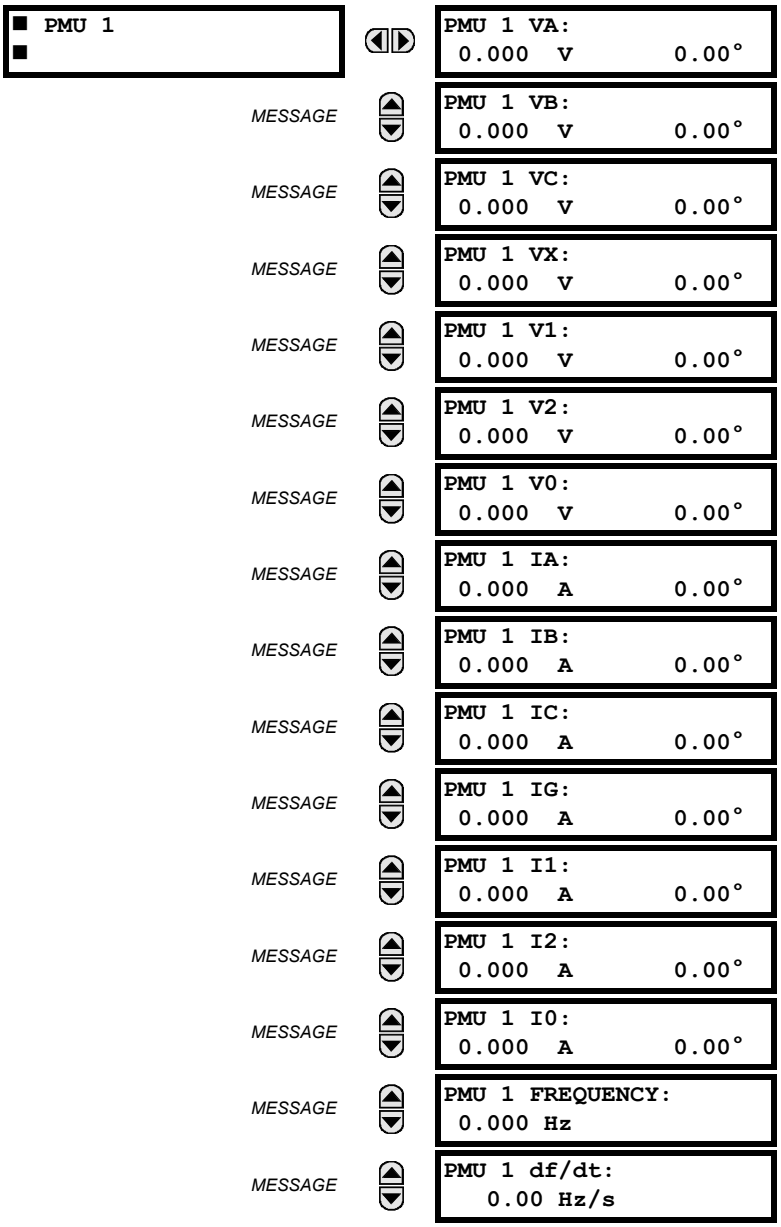

Range: Va or Vab per VT bank connection

Range: Va or Vab per VT bank connection

Range: Va or Vab per VT bank connection

Range: Substituted with zero if delta-connected VTs.

MESSAGE

```
PMU 1 CONFIG CHANGE
COUNTER:      0
```

Range: 0 to 65535

The above actual values are displayed without the corresponding time stamp as they become available per the recording rate setting. Also, the recording post-filtering setting is applied to these values.

6.3.17 PMU AGGREGATOR

PATH: ACTUAL VALUES ⇨⇩ METERING ⇨⇩ PHASOR MEASUREMENT UNIT ⇨⇩ PMU AGGREGATOR 1

```
■ PMU AGGREGATOR 1
■
```

```
PMU AGGREGATOR 1
PDU SIZE: 0
```

Actual values for the IEC 61850-90-5 PDU size are provided. These values allow you to know the approximate Ethernet frame size for the data streams from each aggregator. This can help to estimate network loading. The PDU size shown in the displays does not include the Ethernet, UDP, or IP layers. PDU sizes approaching approximately 1500 bytes result in fragmented data frames, causing increased network traffic.

6.3.18 TRANSDUCER INPUTS AND OUTPUTS

PATH: ACTUAL VALUES ⇨⇩ METERING ⇨⇩ TRANSDUCER I/O DCMA INPUTS ⇨ DCMA INPUT xx

```
■ DCMA INPUT xx
■
```

```
DCMA INPUT xx
0.000 mA
```

Actual values for each DCmA input channel that is enabled are displayed with the top line as the programmed channel ID and the bottom line as the value followed by the programmed units.

PATH: ACTUAL VALUES ⇨⇩ METERING ⇨⇩ TRANSDUCER I/O RTD INPUTS ⇨ RTD INPUT xx

```
■ RTD INPUT xx
■
```

```
RTD INPUT xx
-50 °C
```

Actual values for each RTD input channel that is enabled are displayed with the top line as the programmed channel ID and the bottom line as the value.

6.3.19 DISTANCE

PATH: ACTUAL VALUES ⇨⇩ METERING ⇨⇩ DISTANCE

```
■ DISTANCE
■
```

```
AB LOOP RESISTANCE
RAB: 0.000 ohm
```

MESSAGE

```
AB LOOP REACTANCE
XAB: 0.000 ohm
```

MESSAGE

```
AB LOOP IMPEDANCE
ZAB: 0.000 ohm
```

MESSAGE

```
AB LOOP IMPEDANCE
ANGLE: 0.0
```

MESSAGE

```
BC LOOP RESISTANCE
RBC: 0.000 ohm
```

MESSAGE

```
BC LOOP REACTANCE
XBC: 0.000 ohm
```

MESSAGE

```
BC LOOP IMPEDANCE
ZBC: 0.000 ohm
```

MESSAGE

```
BC LOOP IMPEDANCE
ANGLE: 0.0
```

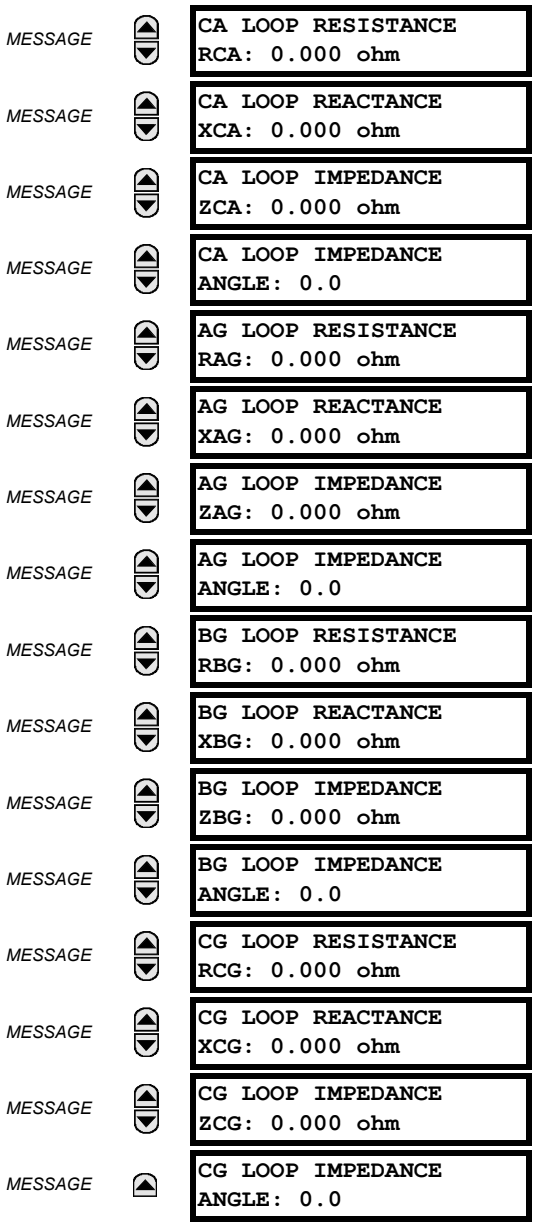

Loop impedance is defined as Z##=|Z##| Angle=R##+jX##, in secondary ohms and ## is the loop indication (AB, BC, CA, AG, BG, and CG respectively).

They are calculated as per the following equations.

$$ZAB = \frac{VA - VB}{IA - IB} \qquad ZBC = \frac{VB - VC}{IB - IC} \qquad ZCA = \frac{VC - VA}{IC - IA}$$

$$ZAG = \frac{VA}{IA + \left(\frac{Z0}{Z1} - 1\right) * I0 + \frac{1}{3} * \frac{Z0M}{Z1} * IG} \qquad ZBG = \frac{VB}{IB + \left(\frac{Z0}{Z1} - 1\right) * I0 + \frac{1}{3} * \frac{Z0M}{Z1} * IG} \qquad ZCG = \frac{VC}{IC + \left(\frac{Z0}{Z1} - 1\right) * I0 + \frac{1}{3} * \frac{Z0M}{Z1} * IG}$$

Where VA, VB, VC are phase voltage phasors in secondary volts; IA, IB, IC are current phasors in secondary amps, I0 is the zero sequence current phasors in secondary amps; and IG is the ground current from the parallel line scaled to the source phase CT in secondary amps.

Z0/Z1 is the zero sequence impedance to positive sequence impedance ratio, and Z0M/Z1 is mutual zero sequence impedance to positive sequence impedance ratio, both are settings taken from the first enabled ground distance zone (count from zone 1 to zone 5).

ZAG, ZBG, ZCG are calculated only if at least one ground distance zone is enabled; otherwise all the metering quantities for ground distance impedance (ZAG, ZBG, and ZCG) are reset to zero, including magnitude and angle. Note that VTs of the distance source must be connected in Wye if the ground distance element is enabled.

PATH: ACTUAL VALUES ⇨⇩ REMOTE RESOURCES ⇨⇩ FIELD UNIT U1(U8)

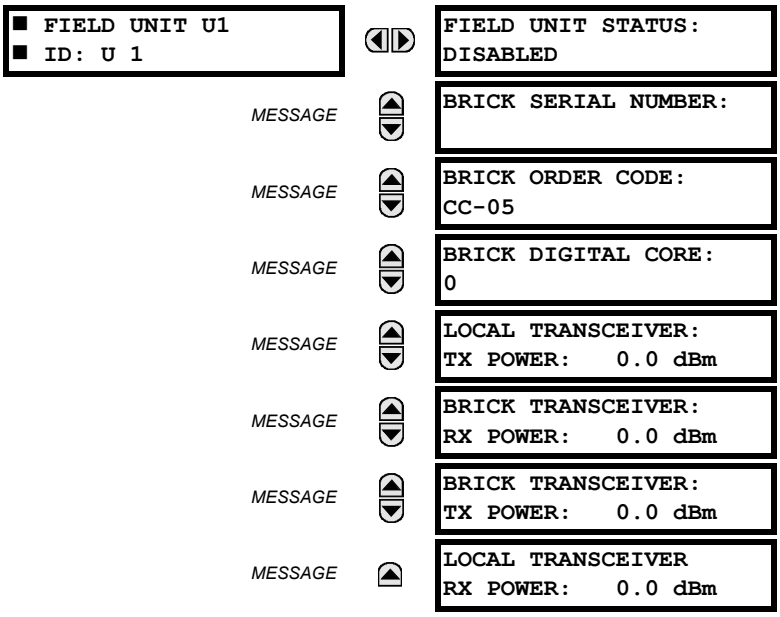

Range: Disabled, Enabled

This menu displays when using a Process Bus Module for a HardFiber Brick.

6.5.1 USER PROGRAMMABLE FAULT REPORTS

PATH: ACTUAL VALUES ⇨⇩ RECORDS ⇨ USER PROGRAMMABLE FAULT REPORTS

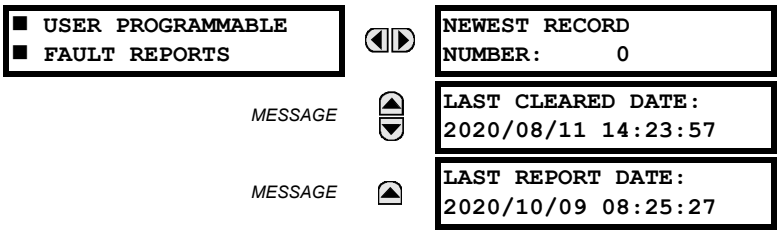

This menu displays the user-programmable fault report actual values. See the User Programmable Fault Report section in chapter 5 for additional information on this feature.

6.5.2 EVENT RECORDS

PATH: ACTUAL VALUES ⇨⇩ RECORDS ⇨⇩ EVENT RECORDS

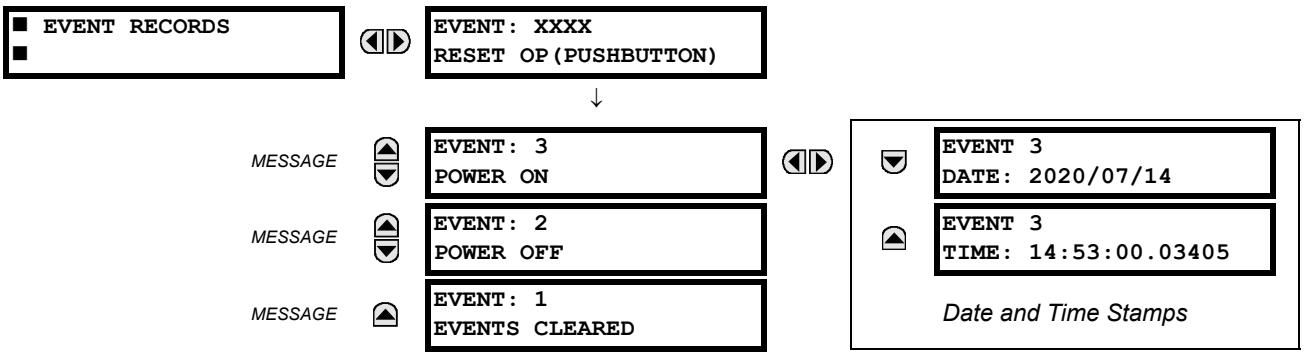

The event records menu shows the contextual data associated with up to the last 1024 events, listed in chronological order from most recent to oldest. If all 1024 event records have been filled, the oldest record will be removed as a new record is added. Each event record shows the event identifier/sequence number, cause, and date/time stamp associated with the event trigger. See the COMMANDS ⇩ CLEAR RECORDS menu for clearing event records.

Only major output operands generate events, not every operand. Elements that assert output per phase, for example, log operating phase output only without asserting the common three-phase operand event.

6.5.3 OSCILLOGRAPHY

PATH: ACTUAL VALUES ⇨⇩ RECORDS ⇨⇩ OSCILLOGRAPHY

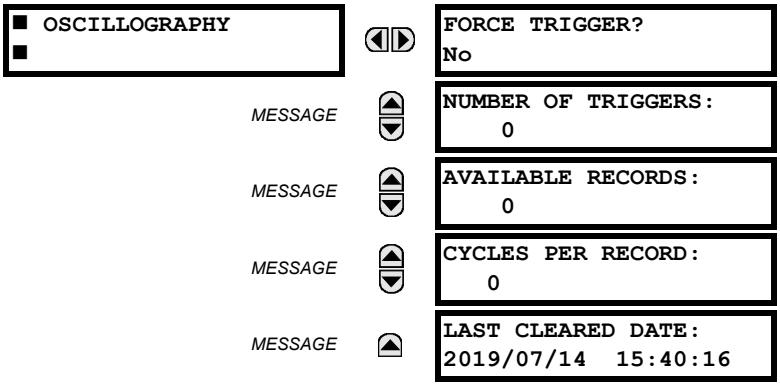

Range: No, Yes

This menu allows the user to view the number of triggers involved and number of oscillography traces available. The **CYCLES PER RECORD** value is calculated to account for the fixed amount of data storage for oscillography. See the Oscillography section of chapter 5 for additional details.

A trigger can be forced here at any time by setting "Yes" to the **FORCE TRIGGER?** command. Refer to the **COMMANDS ⇨⇩ CLEAR RECORDS** menu for information on clearing the oscillography records.

6.5.4 DATA LOGGER

PATH: ACTUAL VALUES ⇨⇩ RECORDS ⇨⇩ DATA LOGGER

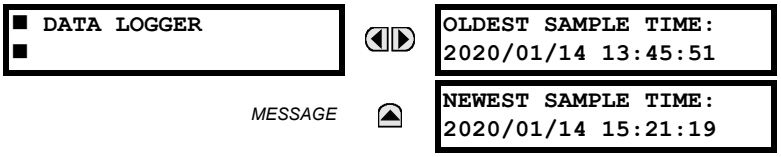

The **OLDEST SAMPLE TIME** represents the time at which the oldest available samples were taken. It is static until the log gets full, at which time it starts counting at the defined sampling rate. The **NEWEST SAMPLE TIME** represents the time the most recent samples were taken. It counts up at the defined sampling rate. If the data logger channels are defined, then both values are static.

Refer to the **COMMANDS ⇨⇩ CLEAR RECORDS** menu for clearing data logger records.

6.5.5 PHASOR MEASUREMENT UNIT RECORDS

PATH: ACTUAL VALUES ⇨ RECORDS ⇨⇩ PMU RECORDS

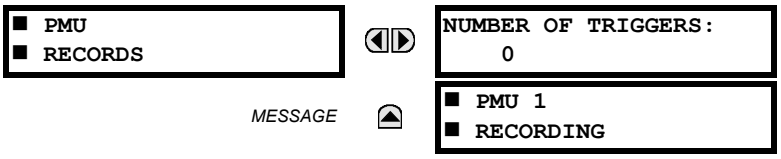

Range: 0 to 65535 in steps of 1

See below.

The number of triggers applicable to the phasor measurement unit recorder is indicated by the **NUMBER OF TRIGGERS** value. The status of the phasor measurement unit recorder is indicated as follows:

PATH: ACTUAL VALUES ⇨ RECORDS ⇨⇩ PMU RECORDS ⇨ PMU 1 RECORDING

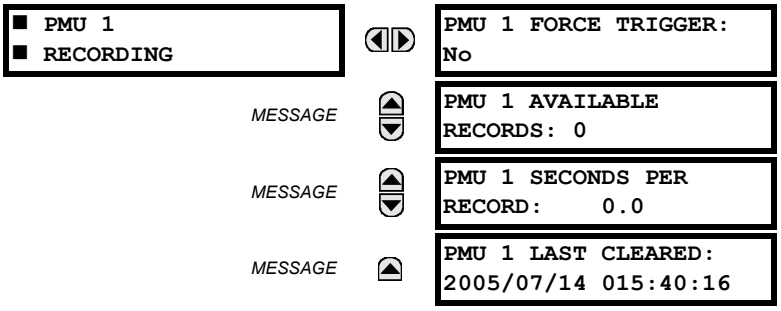

Range: No, Yes

Range: 0 to 65535 in steps of 1

Range: 0 to 6553.5 in steps of 0.1

Range: date and time in format shown

6.6.1 MODEL INFORMATION

PATH: ACTUAL VALUES ⇨⇩ PRODUCT INFO ⇨ MODEL INFORMATION

■ MODEL INFORMATION ■	ORDER CODE LINE 1: G60-E00-HCH-F8G-H6B	Range: standard GE order code format; example order code shown
MESSAGE	ORDER CODE LINE 2:	Range: standard GE order code format
MESSAGE	ORDER CODE LINE 3:	Range: standard GE order code format
MESSAGE	ORDER CODE LINE 4:	Range: standard GE order code format
MESSAGE	SERIAL NUMBER:	Range: standard GE serial number format
MESSAGE	ETHERNET MAC ADDRESS 000000000000	Range: standard Ethernet MAC address format
MESSAGE	MANUFACTURING DATE: 0	Range: YYYY/MM/DD HH:MM:SS
MESSAGE	OPERATING TIME: 0:00:00	Range: operating time in HH:MM:SS
MESSAGE	PMU FEATURE ACTIVE: No	Range: Yes, No
MESSAGE	CT/ VT ADVANCED DIAG ACTIVE: No	Range: Yes, No
MESSAGE	LAST SETTING CHANGE: 2019/01/01 23:11:19	Range: YYYY/MM/DD HH:MM:SS

The order code, serial number, Ethernet MAC address, date and time of manufacture, and operating time are shown here.

ETHERNET MAC ADDRESS — UR devices with firmware 7.0x and above have three Ethernet ports that can be used on three networks. The MAC address displays for port 1. The MAC address for port 2 is one higher. The MAC address for port 3 is one higher than port 2. In redundant mode, the MAC addresses for ports 2 and 3 are the same as port 2.

6.6.2 FIRMWARE REVISIONS

PATH: ACTUAL VALUES ⇨⇩ PRODUCT INFO ⇨⇩ FIRMWARE REVISIONS

■ FIRMWARE REVISIONS ■	G60 Relay REVISION: 7.2x	Range: 0.00 to 655.35 Revision number of the application firmware.
MESSAGE	MODIFICATION FILE NUMBER: 0	Range: 0 to 65535 (ID of the MOD FILE) Value is 0 for each standard firmware release.
MESSAGE	BOOT PROGRAM REVISION: 7.06	Range: 0.00 to 655.35 Revision number of the boot program firmware.
MESSAGE	FRONT PANEL PROGRAM REVISION: 2.01	Range: 0.00 to 655.35 Revision number of faceplate program firmware.
MESSAGE	COMPILE DATE: 2021/04/09 04:55:16	Range: Any valid date and time. Date and time when product firmware was built.
MESSAGE	BOOT DATE: 2021/02/23 16:41:32	Range: Any valid date and time. Date and time when the boot program was built.

MESSAGE

```
FPGA PROGRAM
REVISION  02.01
```

Range: 0.00 to 655.35
Revision number for FPGA.

MESSAGE

```
FPGA DATE:
2013/10/09 13:13:00
```

Range: Any valid date and time.
Date and time when the FPGA was built.

The shown data is illustrative only. A modification file number of 0 indicates that, currently, no modifications have been installed.

7.1.1 COMMANDS MENU

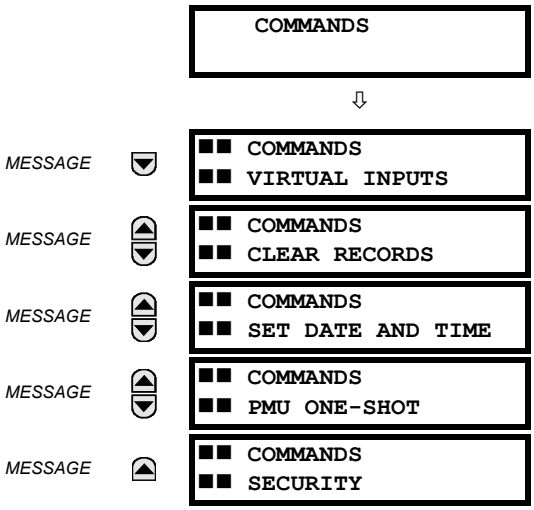

The commands menu contains relay directives intended for operations personnel. All commands can be protected from unauthorized access via the command password; see the Security section of chapter 5 for details. The following flash message appears after successfully command entry:

7.1.2 VIRTUAL INPUTS

PATH: COMMANDS ⇨ VIRTUAL INPUTS

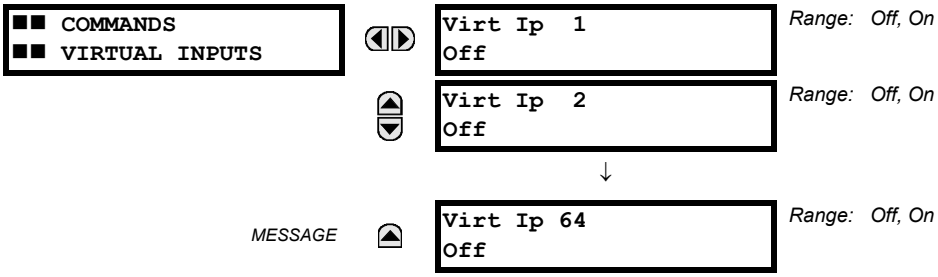

The states of up to 64 virtual inputs are changed here. The first line of the display indicates the ID of the virtual input. The second line indicates the current or selected status of the virtual input. This status will be a state off (logic 0) or on (logic 1).

7.1.3 CLEAR RECORDS

PATH: COMMANDS ⇨⇩ CLEAR RECORDS

■■ COMMANDS ■■ CLEAR RECORDS	CLEAR USER FAULT REPORTS? No	*Range: No, Yes*
	CLEAR EVENT RECORDS? No	*Range: No, Yes*
	CLEAR OSCILLOGRAPHY? No	*Range: No, Yes*
	CLEAR DATA LOGGER? No	*Range: No, Yes*
	CLEAR ENERGY? No	*Range: No, Yes*
	CLEAR UNAUTHORIZED ACCESS? No	*Range: No, Yes*
	CLEAR DIRECT I/O COUNTERS? No	*Range: No, Yes. Valid only for units with Direct Input/ Output module.*
	CLEAR TELEPROTECT COUNTERS? No	*Range: No, Yes*
	CLEAR FREQ OOB ACCUMULATORS? No	*Range: No, Yes*
	PRESET FREQ OOB ACCUMULATORS? No	*Range: No, Yes*
	CLEAR ALL RELAY RECORDS? No	*Range: No, Yes*

This menu contains commands for clearing historical data such as the event records. Data is cleared by changing a command setting to "Yes" and pressing the ENTER key. After clearing data, the command setting automatically reverts to "No".

7.1.4 SET DATE AND TIME

PATH: COMMANDS ⇨⇩ SET DATE AND TIME

■■ COMMANDS ■■ SET DATE AND TIME	SET DATE AND TIME: 2020/01/14 13:47:03	*(YYYY/MM/DD HH:MM:SS)*

The date and time can be entered on the faceplate keypad. The time setting is based on the 24-hour clock. The complete date, as a minimum, must be entered to allow execution of this command. The new time and date take effect when the ENTER key is pressed.

When the relay is synchronizing to an external time source such as PTP, IRIG-B, or SNTP, the manually entered time is over-written.

The timescale of the entered time is **local time**, including daylight savings time where and when applicable.

PATH: COMMANDS ⇨⇩ RELAY MAINTENANCE

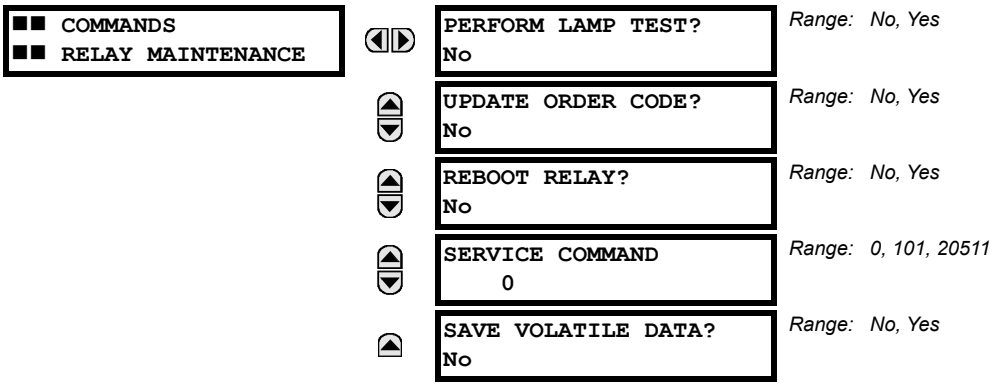

This menu contains commands for relay maintenance purposes. Commands for the lamp test and order code are activated by changing a command setting to “Yes” and pressing the ENTER key. The command setting will then automatically revert to “No”. The service command is activated by entering a numerical code and pressing the ENTER key.

The **PERFORM LAMP TEST** command turns on all faceplate LEDs and display pixels for a short duration. The **UPDATE ORDER CODE** command causes the relay to scan the backplane for the hardware modules and update the order code to match. If an update occurs, the following message is shown.

```
UPDATING...
PLEASE WAIT
```

There is no impact if there have been no changes to the hardware modules. When an update does not occur, the **ORDER CODE NOT UPDATED** message will be shown.

The **REBOOT RELAY COMMAND** reboots the relay so that changes to configuration settings can take effect. In most cases, if changes are made to the configuration settings these changes do not take effect unless the relay is rebooted.

NOTE

With the CyberSentry option, the Administrator or Operator role can initiate the Reboot Relay command.

The **SERVICE COMMAND** performs specific G60 service actions. Presently, there are two service actions available. Code "20511" returns all settings to their factory default value and restarts the relay (then you re-enter IP address, restart, set unit to "Programmed"). Code “101” is used to clear factory diagnostic information stored in the non-volatile memory. If a code other than these two is entered, the command is ignored and no action is taken. Various self-checking diagnostics are performed in the background while the G60 is running, and diagnostic information is stored on the non-volatile memory from time to time based on the self-checking result. Although the diagnostic information is cleared before the G60 is shipped from the factory, the user can want to clear the diagnostic information for themselves under certain circumstances. For example, you clear diagnostic information after replacement of hardware. Once the diagnostic information is cleared, all self-checking variables are reset to their initial state and diagnostics restart from scratch.

SAVE VOLATILE DATA saves this data to compact flash memory prior to shutdown. This allows the saved data to be as recent as possible instead of relying on the periodic timer to save the data.

PATH: COMMANDS ⇨⇩ PMU ONE-SHOT

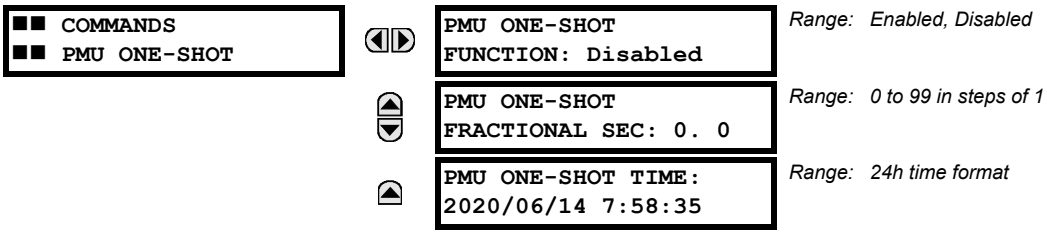

This feature allows pre-scheduling a PMU measurement at a specific point in time. It can be used to test for accuracy of the PMU and for manual collection of synchronized measurements through the system, as explained below.

When enabled, the function continuously compares the present time with the pre-set **PMU ONE-SHOT TIME**. When the two times match, the function compares the present sequence number of the measured synchrophasors with the pre-set **PMU ONE-SHOT FRACTIONAL SEC**. When the two numbers match, the function freezes the synchrophasor actual values and the corresponding protocol data items for 30 seconds. This allows manual read-out of the synchrophasor values for the pre-set time and pre-set sequence number (via the faceplate display, supported communication protocols such as Modbus or DNP, and the EnerVista UR Setup software).

When freezing the actual values the function also asserts a PMU ONE-SHOT OP FlexLogic operand. This operand may be configured to drive an output contact and trigger an external measuring device such as a digital scope with the intent to verify the accuracy of the PMU under test.

With reference to the figure below, the PMU one-shot function (when enabled) controls three FlexLogic operands:

- The PMU ONE-SHOT EXPIRED operand indicates that the one-shot operation has been executed, and the present time is at least 30 seconds past the scheduled one-shot time.
- The PMU ONE-SHOT PENDING operand indicates that the one-shot operation is pending; that is, the present time is before the scheduled one-shot time.
- The PMU ONE-SHOT OP operand indicates the one-shot operation and remains asserted for 30 seconds afterwards.

When the function is disabled, all three operands are de-asserted. The one-shot function applies to all logical PMUs of a given G60 relay.

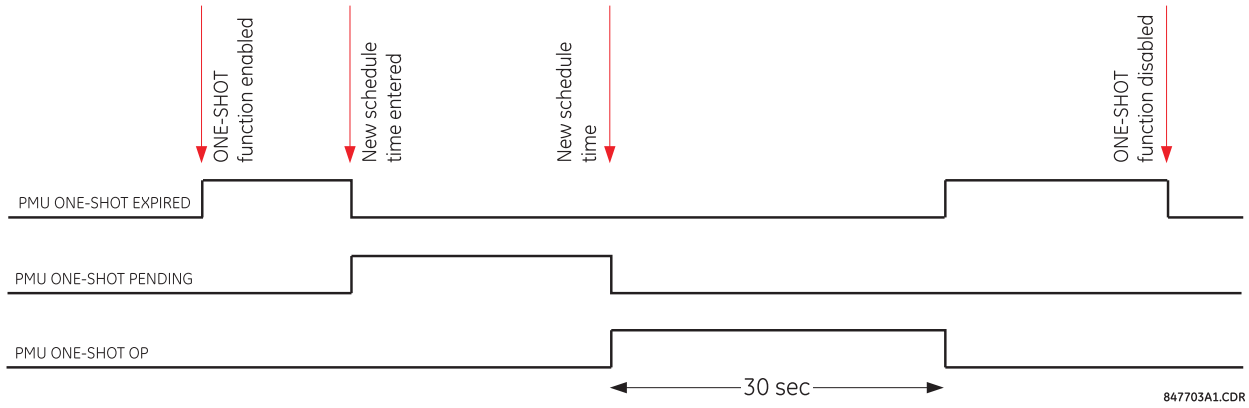

Figure 7–1: PMU ONE-SHOT FLEXLOGIC OPERANDS

TESTING ACCURACY OF THE PMU

The one-shot feature can be used to test accuracy of the synchrophasor measurement. GPS-synchronized tests sets perform a similar function to PMUs: instead of measuring the phasor from physical signals with respect to the externally provided time reference, they produce the physical signals with respect to the externally provided time reference, given the desired phasor values. Therefore the GPS-synchronized test sets cannot be automatically assumed more accurate than the PMUs under test. This calls for a method to verify both the measuring device (PMU) and the source of signal (test set).

With reference to the figure below, the one-shot feature could be configured to trigger a high-accuracy scope to capture both the time reference signal (rising edge of the 1 pps signal of the IRIG-B time reference), and the measured waveform. The high-accuracy high-sampling rate record of the two signals captured by the scope can be processed using digital tools to verify the magnitude and phase angle with respect to the time reference signal. As both the time reference and the measured signals are raw inputs to the PMU under test, their independently captured record, processed using third-party software, is a good reference point for accuracy calculations. Such a record proves useful when discussing the test results, and should be retained as a part of the testing documentation.

Note that the PMU under such test does not have to be connected to a real GPS receiver as the accuracy is measured with respect to the timing reference provided to the PMU and not to the absolute UTC time. Therefore a simple IRIG-B generator could be used instead. Also, the test set does not have to support GPS synchronization. Any stable signal source can be used. If both the PMU under test and the test set use the timing reference, they should be driven from the same IRIG-B signal: either the same GPS receiver or IRIG-B generator. Otherwise, the setpoints of the test set and the PMU measurements should not be compared as they are referenced to different time scales.

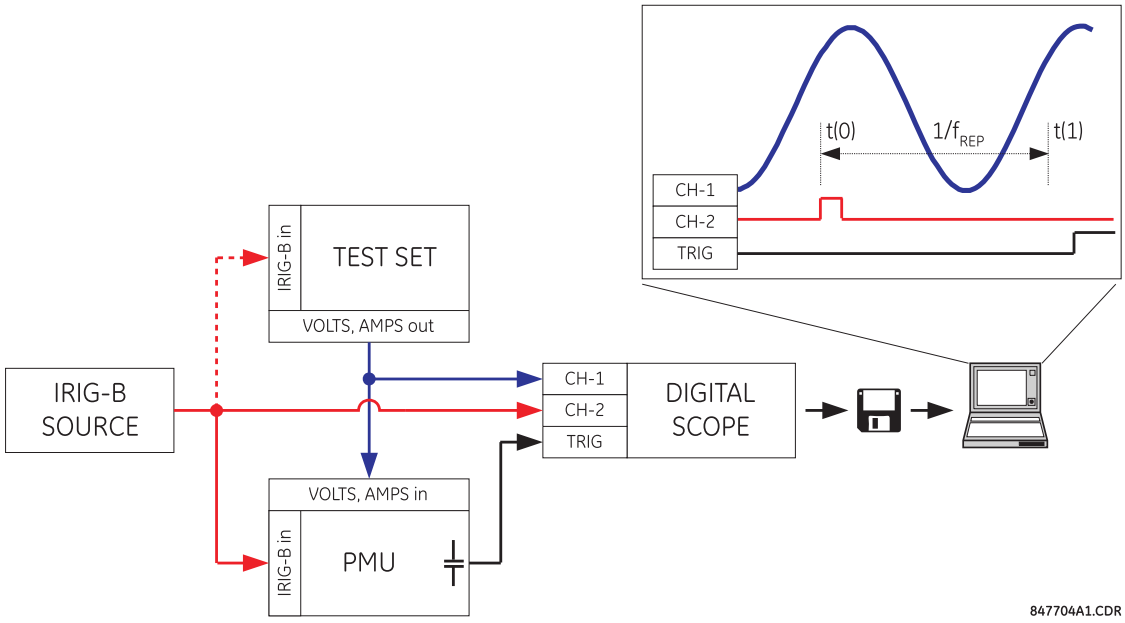

Figure 7–2: USING THE PMU ONE-SHOT FEATURE TO TEST SYNCHROPHASOR MEASUREMENT ACCURACY

COLLECTING SYNCHRONIZED MEASUREMENTS *AD HOC*

The one-shot feature can be used for ad hoc collection of synchronized measurements in the network. Two or more PMU can be pre-scheduled to freeze their measurements at the same time. When frozen the measurements could be collected using EnerVista UR Setup or a protocol client.

7.1.7 SECURITY

iPATH: COMMANDS ⇨⇩ SECURITY

```
■■ SECURITY
■■
```

◀▶	ADMINISTRATOR LOGOFF: No	*Range: Yes, No* *Default: No*
▲▼	ENGINEER LOGOFF: No	*Range: Yes, No* *Default: No*
▲▼	OPERATOR LOGOFF: No	*Range: Yes, No* *Default: No*
▲	CLEAR SECURITY DATA:	*Range: Yes, No* *Default: No*

With the CyberSentry option, this setting is available to enable or disable the following commands:

- **Administrator Logoff:** Selecting 'Yes' allows the Supervisor to forcefully logoff an administrator session.
- **Engineer Logoff:** Selecting 'Yes' allows the Supervisor to forcefully logoff an engineer session.
- **Operator Logoff:** Selecting 'Yes' allows the Supervisor to forcefully logoff an operator session.
- **Clear Security Data**: Selecting 'Yes' allows the Supervisor to forcefully clear all the security logs and clears all the operands associated with the self-tests.

7.2.1 TARGETS MENU

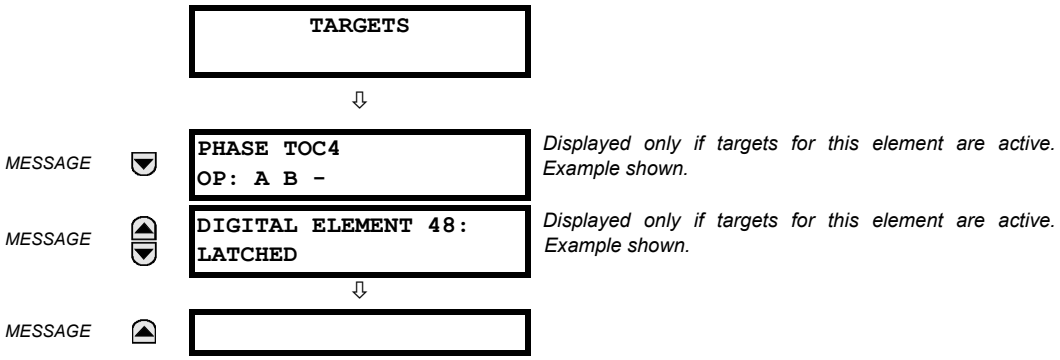

Each G60 element with a TARGET setting has a target message that when activated by its element is displayed in sequence with any other currently active target messages in the **TARGETS** menu. In the example shown, the Phase TOC4 and Digital Element 48 target settings are active and so have their targets displayed. The down arrow below the two elements indicates that there can be other active elements beyond these two.

For more information, see the description of target messages in the next section, and the Introduction to Elements section in the Settings chapter for instructions on TARGET setting.

When no targets are active, the display reads **NO TARGETS**.

7.2.2 TARGET MESSAGES

When there are no active targets, the first target to become active will cause the display to immediately default to that message. If there are active targets and the user is navigating through other messages, and when the default message timer times out (i.e. the keypad has not been used for a determined period of time), the display will again default back to the target message.

The range of variables for the target messages is described below. Phase information will be included if applicable. If a target message status changes, the status with the highest priority will be displayed.

Table 7–1: TARGET MESSAGE PRIORITY STATUS

PRIORITY	ACTIVE STATUS	DESCRIPTION
1	OP	element operated and still picked up
2	PKP	element picked up and timed out
3	LATCHED	element had operated but has dropped out

If a self test error is detected, a message appears indicating the cause of the error. For example **UNIT NOT PROGRAMMED** indicates that the minimal relay settings have not been programmed.

7.2.3 RELAY SELF-TESTS

a) DESCRIPTION

The relay performs a number of self-test diagnostic checks to ensure device integrity. The two types of self-tests (major and minor) are listed in the tables below. When either type of self-test error occurs, the Trouble LED Indicator will turn on and a target message displayed. All errors record an event in the event recorder. Latched errors can be cleared by pressing the RESET key, providing the condition is no longer present.

Major self-test errors also result in the following:

- The critical fail relay on the power supply module is de-energized.
- All other output relays are de-energized and are prevented from further operation.
- The faceplate In Service LED indicator is turned off.

- A RELAY OUT OF SERVICE event is recorded.

b) MAJOR SELF-TEST ERROR MESSAGES

The major self-test errors are outlined in this section.

```
EQUIPMENT MISMATCH:
with 2nd line detail
```

- *Latched target message*: No.
- *Description of problem*: The configuration of modules does not match the order code stored in the G60. For example, "Card F8L Missing" means that hardware module 8L is missing from slot F inside the UR device.
- *How often the test is performed*: On power up. Afterwards, the backplane is checked for missing cards every five seconds.
- *What to do*: Check all modules against the order code, ensure they are inserted properly, and cycle control power. If the problem persists, contact the factory.

```
FLEXLOGIC ERROR:
with 2nd line detail
```

- *Latched target message*: No.
- *Description of problem*: A FlexLogic equation is incorrect.
- *How often the test is performed*: The test is event driven, performed whenever FlexLogic equations are modified.
- *What to do*: Finish all equation editing and use self tests to debug any errors.

```
UNIT NOT PROGRAMMED:
Check Settings
```

- *Latched target message*: No.
- *Description of problem*: The **PRODUCT SETUP** ⇨⇩ **INSTALLATION** ⇨ **RELAY SETTINGS** setting indicates the G60 is not programmed.
- *How often the test is performed*: On power up and whenever the **PRODUCT SETUP** ⇨⇩ **INSTALLATION** ⇨ **RELAY SETTINGS** setting is altered.
- *What to do*: Program all settings and then set **PRODUCT SETUP** ⇨⇩ **INSTALLATION** ⇨ **RELAY SETTINGS** to “Programmed”

```
MODULE FAILURE___:
Contact Factory (xxx)
```

- *Latched target message*: Yes.
- *Description of problem*: Module hardware failure detected. Module Failures 1 to 11 are major. The system can reboot for four of these, as follows.

  MODULE FAILURE 06 — Event message reads SYSTEM INTEGRITRY RECOVERY 06 when a reboot was required and otherwise MODULE FAILURE 06 when a failure was detected

  MODULE FAILURE 07 — Event message reads SYSTEM INTEGRITRY RECOVERY 07 when a reboot was required and otherwise MODULE FAILURE 07 when a failure was detected

  MODULE FAILURE 08 — Event message reads SYSTEM INTEGRITRY RECOVERY 08 when a reboot was required and otherwise MODULE FAILURE 08 when a failure was detected

  MODULE FAILURE 11 — Event message reads SYSTEM INTEGRITRY RECOVERY 11 when a reboot was required and otherwise MODULE FAILURE 11 when a failure was detected
- *How often the test is performed*: Module dependent.

- *What to do*: Generate the Service Report and provide it to GE customer service. The “xxx” text identifies the failed module (for example, F8L).

```
UNIT NOT CALIBRATED:
with 2nd line DSP slot
```

- *Latched target message*: Yes.
- *Description of problem*: DSP module is not calibrated or calibration data is out of range.
- *How often the test is performed*: On relay startup.
- *What to do*: The respective DSP module has to be replaced, contact factory service.

c) MINOR SELF-TEST ERROR MESSAGES

Most of the minor self-test errors can be disabled. See the settings in the User-Programmable Self-Tests section in chapter 5.

```
MODULE FAILURE___:
Contact Factory (xxx)
```

- *Latched target message*: Yes.
- *Description of problem*: Module hardware failure detected. Module Failures 12 and 31 to 33 are minor.
- *How often the test is performed*: Module dependent.
- *What to do*: Contact the factory and supply the failure code noted in the display. The “xxx” text identifies the failed module (for example, F8L).

  For Module Failure 31, a new process card hardware is available. The process card hardware has been enhanced to support new features, such as fast distance protection, Synchrophasors Frequency, and Rate of Change of Frequency calculations to conform to C37.118 - 2005 standard. The new functionality leveraging the hardware is supported with firmware revision 7.25 and above. When using an older revision of the process card with a new firmware revision (7.25), Module Failure 31 indicates the limited functionality. If your application requires the new functionality, then new process card hardware is required and otherwise you can continue using the existing hardware. To know the revision of your hardware, contact the factory.

```
IEC 61850 DATA SET:
LLN0 GOOSE# Error
```

- *Latched target message*: No.
- *Description of problem*: A data item in a configurable GOOSE data set is not supported by the G60 order code.
- *How often the test is performed*: On power up.
- *What to do*: Verify that all the items in the GOOSE data set are supported by the G60. The EnerVista UR Setup software will list the valid items. An IEC61850 client will also show which nodes are available for the G60.

```
IEC 61850 DATA SET:
LLN0 BR# Error
```

- *Latched target message*: No.
- *Description of problem*: A data item in a configurable report data set is not supported by the G60 order code.
- *How often the test is performed*: On power up.
- *What to do*: Verify that all the items in the configurable report data set are supported by the G60. The EnerVista UR Setup software will list the valid items. An IEC 61850 client will also show which nodes are available for the G60.

```
MAINTENANCE ALERT:
Replace Battery
```

- *Latched target message*: Yes.
- *Description of problem*: The battery is not functioning.
- *How often the test is performed*: The battery is monitored every five seconds. The error message displays after 60 seconds if the problem persists.
- *What to do*: Replace the battery as outlined in the Maintenance chapter.

DIRECT RING BREAK:
MAINTENANCE ALERT

- *Latched target message*: No.
- *Description of problem*: Direct input and output settings are configured for a ring, but the connection is not in a ring.
- *How often the test is performed*: Every second.
- *What to do*: Check direct input and output configuration and wiring.

MAINTENANCE ALERT:
Bad IRIG-B Signal

- *Latched target message*: No.
- *Description of problem*: A bad IRIG-B input signal has been detected.
- *How often the test is performed*: Monitored whenever an IRIG-B signal is received.
- *What to do*: Ensure the following:
  - The IRIG-B cable is properly connected.
  - Proper cable functionality (that is, check for physical damage or perform a continuity test).
  - The IRIG-B receiver is functioning.
  - Check the input signal level (it may be less than specification).

  If none of these apply, then contact the factory.

MAINTENANCE ALERT:
Bad PTP Signal

- *Latched target message*: No.
- *Description of problem*: No PTP enabled port has good PTP signal input.
- *How often the test is performed*: Activated when no acceptable signal is being received.
- *What to do*: Ensure the following:
  - The Ethernet cable(s) are properly connected.
  - At least one PTP grandmaster-capable clock is functioning.
  - If a strict power profile (PP) is enabled, that entire network is PP compliant.
  - The network is delivering PTP messages to the relay.

MAINTENANCE ALERT:
SNTP Failure

- *Latched target message*: No.
- *Description of problem*: The SNTP server is not responding.
- *How often the test is performed*: Every 10 to 60 seconds.
- *What to do*: Check that Ethernet cable(s) are properly connected. Check that configuration for the SNTP server corresponds to the actual server settings. Check connectivity to the server (ping the server IP address).

```
MAINTENANCE ALERT:
4L Discrepancy
```

- *Latched target message*: No.
- *Description of problem*: A discrepancy has been detected between the actual and desired state of a latching contact output of an installed type “4L” module.
- *How often the test is performed*: Upon initiation of a contact output state change.
- *What to do*: Verify the state of the output contact and contact the factory if the problem persists.

```
MAINTENANCE ALERT:
Oscillatory GOOSE
```

- *Latched target message*: No.
- *Description of problem*: A data item in a configurable GOOSE data set is oscillating.
- *How often the test is performed*: Upon scanning of each configurable GOOSE data set.
- *What to do*: Evaluate all logic pertaining to this item.

```
DIRECT DEVICE OFF:
COMM Path Incomplete
```

- *Latched target message*: No.
- *Description of problem*: A direct device is configured but not connected.
- *How often the test is performed*: Every second.
- *What to do*: Check direct input and output configuration and wiring.

```
RXGOOSE OFFLINE:
COMM Path Incomplete
```

- *Latched target message*: No.
- *Description of problem*: One or more GOOSE devices are not responding.
- *How often the test is performed*: Event driven. The test is performed when a device programmed to receive GOOSE messages stops receiving. This can be from 1 to 60 seconds, depending on GOOSE packets.
- *What to do*: Check GOOSE setup.

```
AGGREGATOR ERROR:
```

- *Latched target message: No.*
- *Description of problem: The second line of this self-test error indicates the problem with the PMU Aggregator.*
- *How often the test is performed: Each time a PMU’s related settings is changed.*
- *What to do: Correct the problem indicated in the second line or contact the factory.*

```
TEMP MONITOR:
OVER TEMPERATURE
```

- *Latched target message*: Yes.
- *Description of problem*: The ambient temperature is greater than the maximum operating temperature (+80°C).
- *How often the test is performed*: Every hour.
- *What to do*: Remove the G60 from service and install in a location that meets operating temperature standards.

```
SYSTEM EXCEPTION:
Press RESET Key
```

- *Latched target message*: Yes.
- *Description of problem*: Abnormal restart from modules being removed or inserted while the G60 is powered-up, when there is an abnormal DC supply, or as a result of internal relay failure.
- *How often the test is performed*: Event driven.
- *What to do*: Contact the factory.

```
MAINTENANCE ALERT:
FIRST ETHERNET FAIL
```

```
MAINTENANCE ALERT:
SECOND ETHERNET FAIL
```

```
MAINTENANCE ALERT:
THIRD ETHERNET FAIL
```

- *Latched target message*: Yes.
- *Description of problem*: A link loss detection on an Ethernet port. The link loss is due to unplugging the cable or the switch port being down.
- *How often the test is performed*:
- *What to do*: Check the connection.

```
PROTOTYPE FIRMWARE:
Self Test Error
```

- *Description of problem*: Seen until the builds is tagged as being 'release candidate' or 'gold' builds.
- *What to do*: Update firmware to either of these builds.


```
STORAGE MEDIA ALARM:
Self Test Error
```

- *Latched target message*: No.
- *Description of problem*: The CPU module fails to read from or write to the Compact Flash (CF) card inside the module. The CF card stores certain non-volatile data, such as event records, oscillography and datalogger records, fault report values, and non-volatile actual values. Settings are not stored in CF and hence are unaffected by this self-test.
- *How often the test is performed*: On power up. Afterwards, every time the CPU accesses the CF card for reading or writing.
- *What to do*: Contact the factory.

```
RRTD COMM FAIL:
Self Test Error
```

- *Description of problem*: Communications with remote RTD unit (RRTD) or GPM-F failed for longer than 10 seconds.
- *Latched target message*: No.
- *How often the test is performed*: Runs only if "Com2 Usage" is set to RRTD or RRTD&GPM-F. Checked every five seconds.
- *What to do*: Check COM2 port settings, check RS485 cables.

VOLTAGE MONITOR:
with 2nd line detail

- *Description of problem*: The relay detected a problem with the internal voltage rails for longer than 25 seconds.
- *Latched target message*: Yes.
- *How often the test is performed*: Every five seconds.
- *What to do*: Contact GE customer service.

SETTINGS SAVE ERROR:
Contact Factory

- *Description of problem*: The relay failed to store the settings to the flash memory.
- *Latched target message*: Yes.
- *How often the test is performed*: When a setting is changed.
- *What to do*: Contact the factory.

LOW ON MEMORY:
with 2nd line detail

- *Description of problem*: The relay periodically checks the amount of free RAM memory available and the amount of free stack available for each task against pre-defined thresholds. The second line of the self-test indicates which of the tests failed. It asserts this self-test if those tests fail.
- *Latched target message*: Yes.
- *How often the test is performed*: Every five seconds.
- *What to do*: Contact the factory.

FGM FAILURE:
GPM-F TROUBLE 01 to 06

- *Latched target message*: No.

WRONG TRANSCEIVER:
Self Test Error

- *Latched target message*: Yes.
- *Description of problem*: The type of SFP does not match the CPU type.

  T-type CPU = All ports support fiber SFPs only

  U-type CPU = Maintenance port needs RJ45 SFP and the other two ports fiber SFPs

  V-type CPU = All ports support RJ45 SFPs only
- *What to do*: A web page "SFP Transceiver Information" is provided. This page displays the type of the SFP in it. This data is to be used with the CPU type to know the cause of the problem.

MAINTENANCE ALERT:
SFP MODULE x FAIL

- *Latched target message*: No.
- *Description of problem*: A faulty SFP or unplugging the SFP would generate this self test.

- *What to do*: The web page "SFP Transceiver Information" described in the previous section applies for this self test as well. The "SFP Module Fail" has higher priority and it suppresses the "Ethernet Fail" target message. The "SFP MODULE FAIL FUNCTION" setting enables/disables this self test. The target for this self test is priority-based, with the third one being the highest priority. For example, if all three SFP modules fail, then the third SFP target is activated. If the third SFP module failure resolves, then the second SFP target is activated.

d) EXTERNAL DEVICE SELF-TEST ERROR MESSAGES

The major self-test errors are listed and described below.

```
GPM-F FAILURE:
TROUBLE 01
```

- *Latched target message*: No.
- *Description of problem*: The G60 detects loss of communication with the field ground module on the RS485 link.
- *How often the test is performed*: Every five seconds.
- *What to do*: Check the field ground module and its RS485 connection to G60.

```
GPM-F FAILURE:
TROUBLE 02
```

- *Latched target message*: No.
- *Description of problem*: The field ground module reports trouble with injected low frequency signal voltage level or frequency.
- *How often the test is performed*: Every second.
- *What to do*: Verify that the injection voltage actual value in the G60 is around 15 V. If the message remains, cycle power to the field ground module. If the problem persists, contact the factory.

```
GPM-F FAILURE:
TROUBLE 03
```

- *Latched target message*: No.
- *Description of problem*: Field ground module reports trouble with its circuitry.
- *How often the test is performed*: Every second.
- *What to do*: Verify that the actual values in the G60 are within accepted values. Cycle power to the field ground module. If the problem remains, contact the factory.

```
GPM-F FAILURE:
TROUBLE 04
```

- *Latched target message*: No.
- *Description of problem*: The setting for field ground module injection frequency does not match the injection frequency reported by the module.
- *How often the test is performed*: Every second.
- *What to do*: The field ground module is possibly connected to another G60 through its alternate RS485 port and possibly receiving another frequency setting. Please ensure both G60 devices connected to the same field ground module have the same injection frequency setting.

```
GPM-F FAILURE:
TROUBLE 05
```

- *Latched target message*: No.

- *Description of problem*: The hardware revision of the field ground module is not supported by the present revision of the G60.
- *How often the test is performed*: Every second.
- *What to do*: Check the hardware revision of the field ground module in the G60 actual values and contact the factory.

```
GPM-F FAILURE:
TROUBLE 06
```

- *Latched target message*: No.
- *Description of problem*: The firmware revision of the field ground module is not supported by the present revision of the G60.
- *How often the test is performed*: Every second.
- *What to do*: Check the firmware revision of the field ground module in the G60 actual values and contact the factory.

e) INSTANTANEOUS PROTECTION ELEMENTS TRIP SECURITY

Some self-tests are not fast enough to detect erroneous data and block protection elements, requiring additional measures. To secure instantaneous elements, in addition to the self-tests described, there are supervising elements that validate "fault" conditions and release IOC and differential elements operation.

These trip security elements use currents samples and phasors from the same sources as supervised protection elements to detect independently true "fault" conditions from IOC or differential. Trip security elements do not have any user settings and are enabled as soon as corresponding instantaneous elements are enabled. During laboratory testing, these elements can be disabled by activating any IED test mode via the **SETTINGS ⇨⇩ TESTING ⇨ TEST MODE FUNCTION**.

Trip security elements do not affect protection performance in any way.

Instantaneous Overcurrent

All enabled Phase IOC, Negative-Sequence, and Neutral IOCs in the active setting group are supervised by the trip security element. The goals of the IOC trip security are as follows:

- Detect erroneous operate current due to wiring or data acquisition problem resulting in one phase current dropping to zero, resulting in erroneous negative-sequence and neutral currents
- Justify current phasor magnitude increase with simultaneous current changes from samples

This is achieved by comparing current values of the current phasors and samples change with the values taken two cycles before. Additionally, trip security elements monitor "pre-fault" current to detect if operate condition is happening as a result of current decrease instead of increase.

The element is armed when there are no disturbances in currents for five cycles.

Differential elements (bus, transformer, stator)

Differential trip security runs for each differential zone. It monitors if differential current increase above the pickup setting is confirmed by the disturbance detectors for each differential zone input. When a differential zone fault occurs and at least two zone inputs carry some load, at least two disturbance detectors have to be activated. Or when there is no load at any zone inputs (zone is energized but does not carry any load), at least one disturbance detector has to be activated.

Consequently:

- If there is not any disturbance detector activation in at least one zone input — Differential trip is inhibited
- If there is just one zone input disturbance detector activation but load is present in at least two zone inputs prior to the "fault" — Differential trip is inhibited
- If there is more than one disturbance detector zone input activation — Differential trip is allowed (normal scenario)

When differential trip is inhibited by the trip security element, no setting group change is allowed.

HARDFIBER SELF-TEST ERROR MESSAGES

In addition to those provided by the standard UR-series devices, the UR devices implement HardFiber self-tests. These are listed below. Any abnormal diagnostic condition indicated by the LEDs or the critical failure relay also results in a self-test message, so troubleshooting is described here. For other relays, such at the B95^{Plus}, see that product's instruction manual.

Equipment Mismatch Major Self-Test

Description: The number or type of installed hardware modules does not match the order code stored in the CPU. The standard UR-series Equipment Mismatch self-test is extended to cover the possible presence of a Process Card.

Severity: Protection is not available and all contact outputs and shared outputs are de-asserted.

If this message appears, check all modules against the order code. Ensure they are inserted properly, and cycle the control power. If a module has intentionally been added or removed use the **Update Order Code** command to notify the relay that the current module configuration is correct.

Module Failure Major Self-Test

Description: UR-series device module hardware failure detected.

Severity: Protection is not available and all contact outputs and shared outputs are de-asserted.

If this message appears, contact the factory and supply the failure code noted in the display. Text in the message identifies the failed module (for example, H81). If operated on a Process Card failure, the Module Fail self-test seals-in (latches) till the UR-series device is restarted.

Process Bus Failure Major Self-test

Description: Mission critical data is not available via the process bus. An AC quantity is considered critical if both AC bank origins and the crosschecking settings are other than none. This self-test is also initiated by an AC input discrepancy being detected. See the description of the crosschecking setting in this manual for further information. In addition, this self-test can be initiated by user logic responding to loss of critical contact input/output or other data using the **Process Bus Failure Operand** user-programmable self-test setting. This setting is located in the **Settings > Product Setup > User-Programmable Self Test** menu.

Severity: Protection is not available and all contact outputs and shared outputs are de-asserted.

If this message appears, first rectify any Process Bus Trouble and Brick Trouble self-test errors. Check the actual value of the operand referenced by the **Process Bus Failure Operand** setting, and if "On", determine the cause and rectify.

Should the problem persist with the foregoing all clear, the cause must be an AC input discrepancy, which is typically the result of problems in the input signals to the Bricks, or faults in the Brick input conditioning hardware. If the error was annunciated the first time significant signal was encountered, suspect the former cause and check the copper connections external to the Brick. Where multiple UR-series devices have self-test errors, look for common causes.

To further isolate AC input discrepancy errors, put the relay in test-isolated mode, then one by one, temporally change an AC bank crosschecking setting to none, until the Process Bus Failure clears. Once the problem AC bank has been identified, the values from each of the two Bricks can be examined individually by temporarily mapping each to an AC bank with a single origin.

Process Bus Trouble Minor Self-Test

Description: Communications problems with one or more Bricks. The text of the message identifies the affected field units. This self-test is initiated by low received signal levels at either the Brick or Process Card end, and by the sustained failure to receive poll responses from the proper Brick.

Severity: This self-test error does not directly inhibit protection. However, the affected Brick inputs/outputs may not be available to the UR-series device.

If this message appears, check the field unit actual values. An indication of equipment mismatch means that messages are being received from a Brick, but there is a discrepancy between the settings and the actual Brick serial number, order code, and/or core number. Check that the correct core on the correct Brick is patched through to the correct Process Card port, and that the field unit settings are correct. An indication of communications loss means that no messages are being received. Check that the patching is correct, and that the Brick has power. If that is not the problem, use a professional optical fiber connector cleaning kit to clean both sides of all optical fiber connections from the Process Card through to the affected Brick. If the problem continues after cleaning, consult the factory.

Brick Trouble Minor Self-Test

Description: Brick internal self-testing has detected a trouble internal to the Brick.

Severity: This self-test error does not directly inhibit protection. However, some or all of the affected Brick inputs/outputs may not be available to the UR-series device.

If this message appears, check the Brick environment for over/under temperatures and the voltage of its power source. If the ambient temperature and supply voltage are within Brick specifications, consult the factory. Troubles resulting from a Brick output failing to respond to an output command can only be detected while the command is active, and so in this case the target is latched. A latched target can be unlatched by pressing the faceplate reset key if the command has ended, however the output may still be non-functional.

RTD Trouble Minor Self-Test

Description: The Brick is reporting that the sensed RTD field connection does not match that of an RTD or the reported DC input value is outside of the RTD temperature range, greater than 250°C (likely open sensor circuit fault) or less than -50°C (likely shorted sensor fault).

Latched: No.

If this message appears, check field RTD settings and connections.

TDR Trouble Minor Self-Test

Description: The Brick is reporting that the sensed transducer field connection does not match that of a transducer, or the reported DC input value is outside of the set transducer input range, or the minimum value setting is equal to the maximum value setting.

Latched: No.

If this message appears, check field transducer settings and connections.

8.1.1 DESCRIPTION

As a Wye-Delta transformer introduces discontinuity for the zero-sequence circuit, the ground distance protection cannot be applied, except special circumstances, to respond to faults behind the transformer.

The phase distance elements, however, could be developed so that both accurate reach and correct fault phase identification is retained for faults behind the power transformer as seen from the relaying point. Without appropriate compensation, the relay's reach would depend on a type of fault, creating considerable difficulties in applying the relay.

The G60 provides for any location of the VTs and CTs with respect to the involved power transformer and the direction of any given zone.

In the following equations, the VT and CT locations are referenced as “None” if the transformer is not present between the CT/VT and the intended reach point. Otherwise, the location is to be selected as a type of a transformer as seen from the VT/CT position towards the intended reach point. The following figure explains the adopted rules.

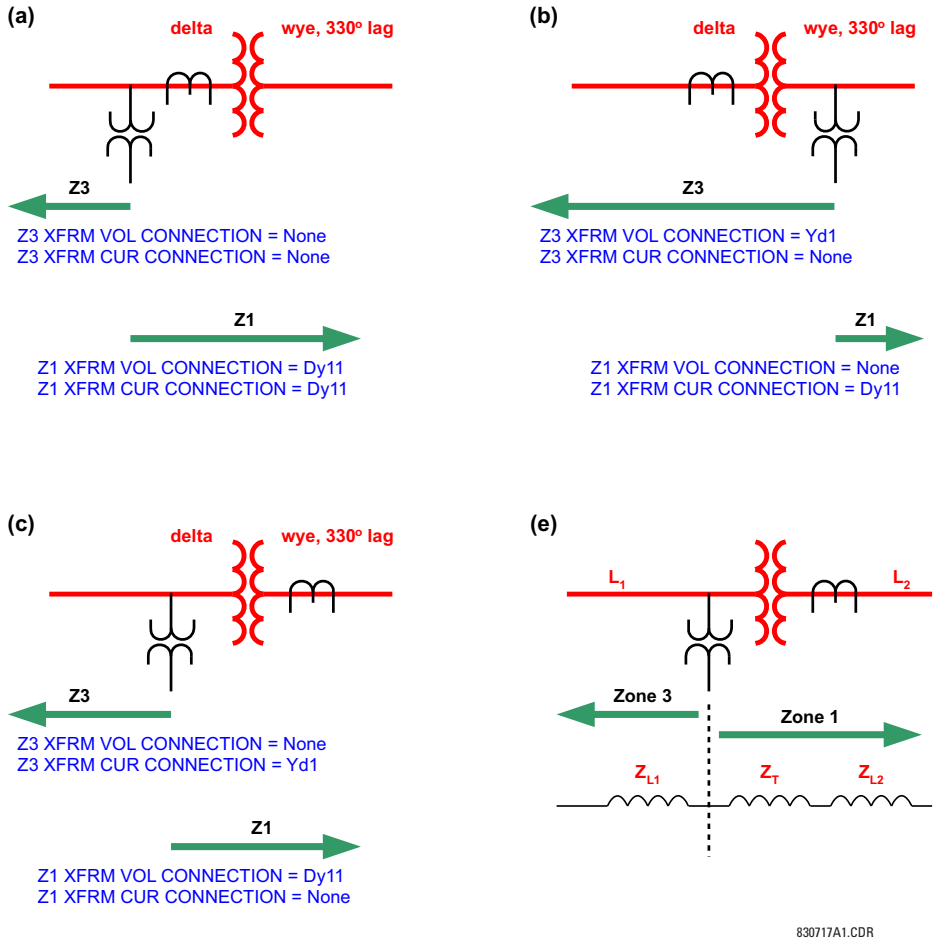

Figure 8–1: APPLICATIONS OF THE “PHS DIST XFMR VOL/CUR CONNECTION” SETTINGS

Table 8–1: PHASE DISTANCE INPUT SIGNALS FOR DELTA-WYE TRANSFORMERS

TRANSFORMER CONNECTION	LOOP	CURRENT TRANSFORMATION	VOLTAGE TRANSFORMATION
None	AB	$I_A - I_B$	V_{AB}
	BC	$I_B - I_C$	V_{BC}
	CA	$I_C - I_A$	V_{CA}
Dy1	AB	$\sqrt{3} I_A$	$\frac{1}{\sqrt{3}}(V_{AB} - V_{CA})$
	BC	$\sqrt{3} I_B$	$\frac{1}{\sqrt{3}}(V_{BC} - V_{AB})$
	CA	$\sqrt{3} I_C$	$\frac{1}{\sqrt{3}}(V_{CA} - V_{BC})$
Dy3	AB	$I_{AB\_21P} = -\sqrt{3} I_C$	$V_{AB\_21P} = \frac{1}{\sqrt{3}}(V_{BC} - V_{CA})$
	BC	$I_{BC\_21P} = -\sqrt{3} I_A$	$V_{BC\_21P} = \frac{1}{\sqrt{3}}(V_{CA} - V_{AB})$
	CA	$I_{CA\_21P} = -\sqrt{3} I_B$	$V_{CA\_21P} = \frac{1}{\sqrt{3}}(V_{AB} - V_{BC})$
Dy5	AB	$I_{AB\_21P} = \sqrt{3} I_B$	$V_{AB\_21P} = \frac{1}{\sqrt{3}}(V_{BC} - V_{AB})$
	BC	$I_{BC\_21P} = \sqrt{3} I_C$	$V_{BC\_21P} = \frac{1}{\sqrt{3}}(V_{CA} - V_{BC})$
	CA	$I_{CA\_21P} = \sqrt{3} I_A$	$V_{CA\_21P} = \frac{1}{\sqrt{3}}(V_{AB} - V_{CA})$
Dy7	AB	$I_{AB\_21P} = -\sqrt{3} I_A$	$V_{AB\_21P} = \frac{1}{\sqrt{3}}(V_{CA} - V_{AB})$
	BC	$I_{BC\_21P} = -\sqrt{3} I_B$	$V_{BC\_21P} = \frac{1}{\sqrt{3}}(V_{AB} - V_{BC})$
	CA	$I_{CA\_21P} = -\sqrt{3} I_C$	$V_{CA\_21P} = \frac{1}{\sqrt{3}}(V_{BC} - V_{CA})$
Dy9	AB	$I_{AB\_21P} = \sqrt{3} I_C$	$V_{AB\_21P} = \frac{1}{\sqrt{3}}(V_{CA} - V_{BC})$
	BC	$I_{BC\_21P} = \sqrt{3} I_A$	$V_{BC\_21P} = \frac{1}{\sqrt{3}}(V_{AB} - V_{CA})$
	CA	$I_{CA\_21P} = \sqrt{3} I_B$	$V_{CA\_21P} = \frac{1}{\sqrt{3}}(V_{BC} - V_{AB})$
Dy11	AB	$I_{AB\_21P} = -\sqrt{3} I_B$	$V_{AB\_21P} = \frac{1}{\sqrt{3}}(V_{AB} - V_{BC})$
	BC	$I_{BC\_21P} = -\sqrt{3} I_C$	$V_{BC\_21P} = \frac{1}{\sqrt{3}}(V_{BC} - V_{CA})$
	CA	$I_{CA\_21P} = -\sqrt{3} I_A$	$V_{CA\_21P} = \frac{1}{\sqrt{3}}(V_{CA} - V_{AB})$

Table 8–2: PHASE DISTANCE INPUT SIGNALS FOR WYE-DELTA TRANSFORMERS

TRANSFORMER CONNECTION	LOOP	CURRENT TRANSFORMATION	VOLTAGE TRANSFORMATION
Yd1	AB	$I_{AB\_21P} = \frac{1}{\sqrt{3}}(2I_A - I_B - I_C)$	$V_{AB\_21P} = \sqrt{3}V_A$
	BC	$I_{BC\_21P} = \frac{1}{\sqrt{3}}(2I_B - I_A - I_C)$	$V_{BC\_21P} = \sqrt{3}V_B$
	CA	$I_{CA\_21P} = \frac{1}{\sqrt{3}}(2I_C - I_A - I_B)$	$V_{CA\_21P} = \sqrt{3}V_C$
Yd3	AB	$I_{AB\_21P} = \frac{1}{\sqrt{3}}(I_A + I_B - 2I_C)$	$V_{AB\_21P} = -\sqrt{3}V_C$
	BC	$I_{BC\_21P} = \frac{1}{\sqrt{3}}(I_B + I_C - 2I_A)$	$V_{BC\_21P} = -\sqrt{3}V_A$
	CA	$I_{CA\_21P} = \frac{1}{\sqrt{3}}(I_A + I_C - 2I_B)$	$V_{CA\_21P} = -\sqrt{3}V_B$
Yd5	AB	$I_{AB\_21P} = \frac{1}{\sqrt{3}}(2I_B - I_A - I_C)$	$V_{AB\_21P} = \sqrt{3}V_B$
	BC	$I_{BC\_21P} = \frac{1}{\sqrt{3}}(2I_C - I_A - I_B)$	$V_{BC\_21P} = \sqrt{3}V_C$
	CA	$I_{CA\_21P} = \frac{1}{\sqrt{3}}(2I_A - I_B - I_C)$	$V_{CA\_21P} = \sqrt{3}V_A$
Yd7	AB	$I_{AB\_21P} = \frac{1}{\sqrt{3}}(I_B + I_C - 2I_A)$	$V_{AB\_21P} = -\sqrt{3}V_A$
	BC	$I_{BC\_21P} = \frac{1}{\sqrt{3}}(I_A + I_C - 2I_B)$	$V_{BC\_21P} = -\sqrt{3}V_B$
	CA	$I_{CA\_21P} = \frac{1}{\sqrt{3}}(I_A + I_B - 2I_C)$	$V_{CA\_21P} = -\sqrt{3}V_C$
Yd9	AB	$I_{AB\_21P} = \frac{1}{\sqrt{3}}(2I_C - I_A - I_B)$	$V_{AB\_21P} = \sqrt{3}V_C$
	BC	$I_{BC\_21P} = \frac{1}{\sqrt{3}}(2I_A - I_B - I_C)$	$V_{BC\_21P} = \sqrt{3}V_A$
	CA	$I_{CA\_21P} = \frac{1}{\sqrt{3}}(2I_B - I_A - I_C)$	$V_{CA\_21P} = \sqrt{3}V_B$
Yd11	AB	$I_{AB\_21P} = \frac{1}{\sqrt{3}}(I_A + I_C - 2I_B)$	$V_{AB\_21P} = -\sqrt{3}V_B$
	BC	$I_{BC\_21P} = \frac{1}{\sqrt{3}}(I_A + I_B - 2I_C)$	$V_{BC\_21P} = -\sqrt{3}V_C$
	CA	$I_{CA\_21P} = \frac{1}{\sqrt{3}}(I_B + I_C - 2I_A)$	$V_{CA\_21P} = -\sqrt{3}V_A$

Equations from the “Current Transformation” and “Voltage Transformation” columns are used to derive inputs to the three (AB, BC, and CA) phase distance elements. For example, if the CTs are located at the delta side of the Delta-Wye 11 transformer, and a given zone is set to look through the transformer into the system connected to the Wye winding, the CT location setting for that zone shall be set to Dy11 and the relay would use $-\sqrt{3}I_B$ instead of a traditional $I_A - I_B$ for the AB phase distance element.

The current supervision pickup setting applies to the currents specified in the “Current Transformation” columns.

A distance zone originates at the location of the VTs (regardless of the location of the CTs). For more information on settings, see Application of Settings chapter.

8.1.2 EXAMPLE

Consider the system shown below:

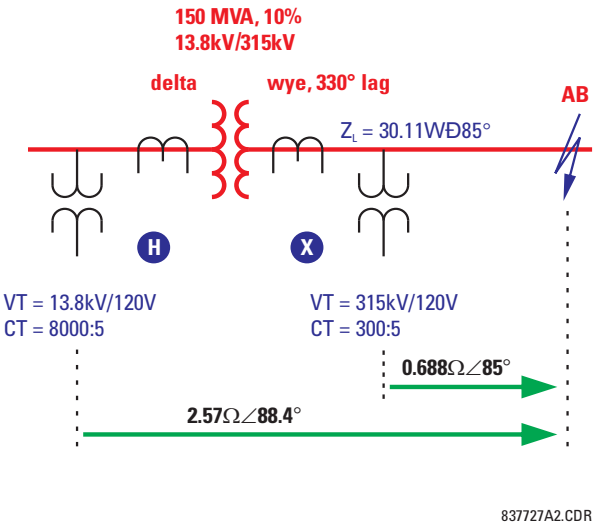

Figure 8–2: SAMPLE SYSTEM CONFIGURATION

Normally, in order to respond to the fault shown in the figure, a distance relay shall be applied at the relaying point X. The relay input signals at this location are shown in the following table.

INPUT	PRIMARY	SECONDARY
VA	100.4 kV ∠–7.32°	38.25 V ∠–7.32°
VB	97.23 kV ∠–53.4°	37.04 V ∠–53.4°
VC	181.8 kV ∠–150.0°	69.26 V ∠–150.0°
IA	1.288 kA ∠–27.6°	21.47 A ∠–27.6°
IB	1.288 kA ∠152.4°	21.47 A ∠152.4°
IC	0	0

If installed at the location X, the relay would use the following input signals for its phase AB distance element:

$V = V_{AB}$ = 77.402 kV ∠57.5° primary or 29.49 V ∠57.5° secondary
$I = I_A - I_B$ = 2.576 kA ∠–27.6° primary or 42.93 A ∠–27.6° secondary

And consequently it would see an apparent impedance of:

$Z_{app} = V / I$ = 30.05 Ω ∠85° primary or 0.687 Ω ∠85° secondary

If applied at location H, the relay sees the following input signals:

INPUT	PRIMARY	SECONDARY
VA	7.584 kV ∠–5.59°	69.95 V ∠–5.59°
VB	6.269 kV ∠–120.1°	54.52 V ∠–120.1°
VC	7.751 kV ∠125.5°	65.84 V ∠125.5°
IA	16.976 kA ∠–27.6°	10.61 A ∠–27.6°
IB	33.952 kA ∠152.4°	21.22 A ∠152.4°
IC	16.976 kA ∠–27.6°	10.61 A ∠–27.6°

The relay is set as follows:

XFMR VOL CONNECTION = “Dy11”
XFMR CUR CONNECTION = “Dy11”

Consequently, the following signals are applied to the phase AB distance element:

$$V = \frac{1}{\sqrt{3}} V_{AB} - V_{BC} = 10.861\ \text{kV}\angle 59.9^\circ \text{ primary or } 94.45\ \text{V}\angle 59.9^\circ \text{ secondary} \quad \textbf{(EQ 8.1)}$$

$$I = -\sqrt{3} I_B = 58.860\ \text{kA}\angle -27.6^\circ \text{ primary or } 36.75\ \text{A}\angle -27.6^\circ \text{ secondary} \quad \textbf{(EQ 8.2)}$$

This results in the following apparent impedance:

$$Z_{app} = \frac{V}{I} = \frac{94.45\ \text{kV}\angle 59.9^\circ}{36.75\ \text{kA}\angle -27.6^\circ} = 2.570\ \Omega\angle 87.5^\circ \text{ secondary} \quad \textbf{(EQ 8.3)}$$

The above value is a correct measure of the distance from the VT location to the fault. For relay location 2, this certainly includes the positive-sequence impedance of the transformer:

$$Z_T(\text{at } 13.8\ \text{kV}) = \frac{10}{100} \times \frac{(13.8\ \text{kV})^2}{150\ \text{MVA}} = 0.127\Omega\angle 90^\circ$$
$$Z_L(\text{at } 13.8\ \text{kV}) = 30.11 \times \left(\frac{13.8}{315}\right)^2 = 0.05779\Omega\angle 85^\circ \quad \textbf{(EQ 8.4)}$$

Thus, 0.127 Ω ∠90° + 0.05779 Ω ∠85° = 0.1847 Ω ∠88.4° primary side or 2.569 Ω ∠88.4° on the secondary side.

The above example illustrates how the relay maintains correct reach for fault behind power transformers. When installed at X, the relay shall be set to 0.687 Ω ∠85° secondary in order to reach to the fault shown in the figure. When installed at H, the relay shall be set to 2.569 Ω ∠88.4° to ensure exactly same coverage.

See the Application of Settings chapter for more information on setting calculations.

8.2.1 CT SATURATION DETECTION

The saturation detector of the G60 takes advantage of the fact that any CT operates correctly for a short period of time even under very large primary currents that would subsequently cause a very deep saturation. As a result of that, in the case of an external fault, the differential current stays very low during the initial period of linear operation of the CTs while the restraining signal develops rapidly. Once one or more CTs saturate, the differential current will increase. The restraining signal, however, yields by at least a few milliseconds. During internal faults, both the differential and restraining currents develop simultaneously. This creates characteristic patterns for the differential - restraining trajectory as depicted below.

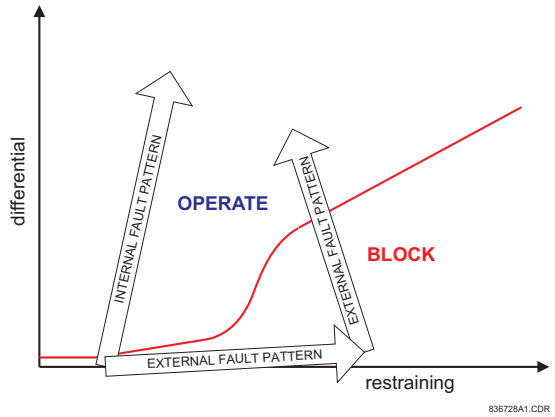

Figure 8–3: CT SATURATION DETECTION: INTERNAL & EXTERNAL FAULT PATTERNS

The CT saturation condition is declared by the saturation detector when the magnitude of the restraining signal becomes larger than the higher breakpoint (HIGH BPNT) and at the same time the differential current is below the first slope (LOW SLOPE). The said condition is of a transient nature and requires a seal-in. A special logic in the form of a “state machine” is used for this purpose as depicted in the following figure.

As the phasor estimator introduces a delay into the measurement process, the aforementioned saturation test would fail to detect CT saturation occurring very fast. In order to cope with very fast CT saturation, another condition is checked that uses relations between the signals at the waveform level. The basic principle is similar to that described above. Additionally, the sample-based stage of the saturation detector uses the time derivative of the restraining signal (di/dt) to better trace the saturation pattern shown in the following figure.

The saturation detector is capable of detecting saturation occurring in approximately 3 ms from fault inception. It is worth emphasizing that the saturation detector, although having no dedicated settings, uses the main differential characteristic for proper operation. This must be kept in mind when setting the characteristic as its parameters must retain their original meaning.

The operation of the saturation detector is available as the FlexLogic operand STATOR DIFF SAT A/B/C.

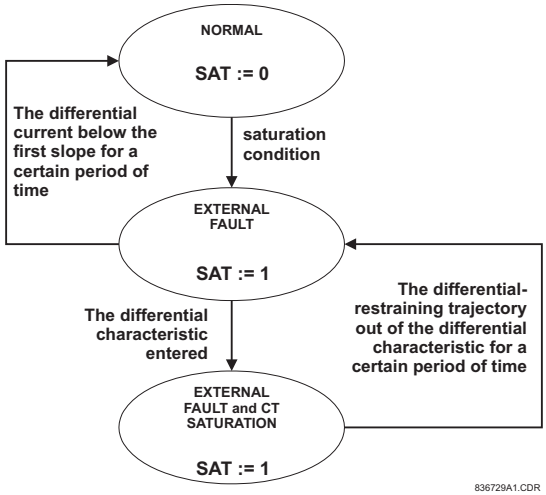

Figure 8–4: SATURATION DETECTOR STATE MACHINE

9.1.1 DESCRIPTION

This section provides an example of the settings required for an example system configuration. Consider the generator protection system shown below:

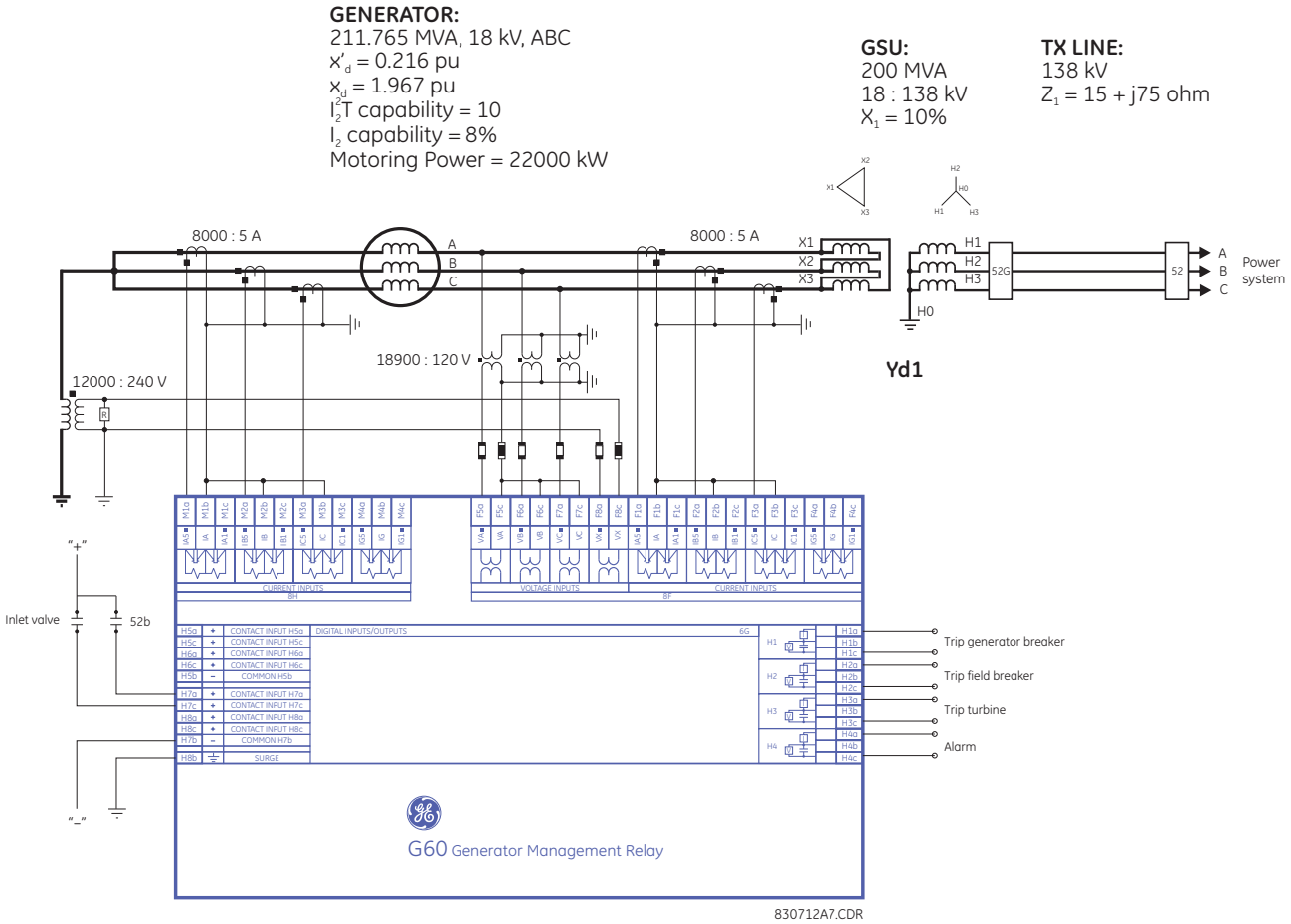

Figure 9–1: G60 SAMPLE SYSTEM

9.1.2 SYSTEM SETUP

Ideally, the CTs should be selected so the generator nominal current is 80 to 85% of CT primary. The following settings are entered for the example system. The M5 bank and the ground CT input on each of the groups are unused in this example.

The nominal current is given by:

$$I_{nom} = \frac{S_{nom}}{\sqrt{3}V_{nom}} = \frac{212 \times 10^6 \text{ VA}}{\sqrt{3} \times 18 \times 10^3 \text{ V}} = 6800 \text{ A} \quad \textbf{(EQ 9.1)}$$

Make the following settings changes in EnerVista UR Setup (or alternately, via the front panel through the **SYSTEM SETUP** ⇨ **AC INPUTS** ⇨ **CURRENT BANK F1** and the **SYSTEM SETUP** ⇨ **AC INPUTS** ⇨⇩ **CURRENT BANK M1** menus).

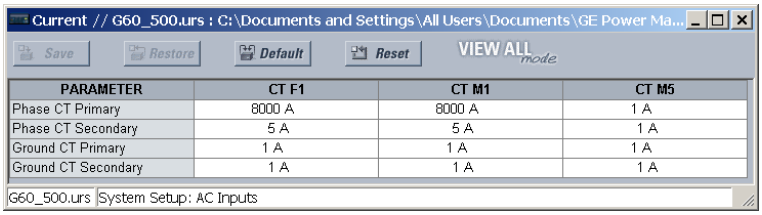

For the example system, the voltage settings are calculated as follows:

$$\text{PHASE VT SECONDARY} = \frac{18000\ \text{V}}{\sqrt{3}} \times \frac{120\ \text{V}}{18900\ \text{V}} = 66\ \text{V} \quad \text{(EQ 9.2)}$$

$$\text{PHASE VT RATIO} = \frac{18900\ \text{V}}{120\ \text{V}} = 157.5 \quad \text{(EQ 9.3)}$$

$$\text{NEUTRAL VT RATIO} = \frac{12000\ \text{V}}{240\ \text{V}} = 50 \quad \text{(EQ 9.4)}$$

Enter the following values through EnerVista UR Setup (or alternately, through the front panel **SETTINGS** ⇨⇩ **SYSTEM SETUP** ⇨ **AC INPUTS** ⇨⇩ **VOLTAGE BANK F5** ⇨ menu):

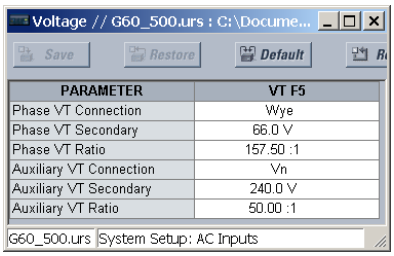

In the case of delta connected VTs, the base 3-phase power on primary side is calculated as $\sqrt{3}$ x Phase CT Primary x Phase VT Ratio x Phase VT Secondary (that is, instead of 3, use $\sqrt{3}$ due to line-to-line voltage base).

9.1.3 POWER SYSTEM

Frequency tracking should always be enabled for generator applications. Make the following power system parameters changes via EnerVista UR Setup or through the **SETTINGS** ⇨⇩ **SYSTEM SETUP** ⇨⇩ **POWER SYSTEM** ⇨⇩ **VOLTAGE BANK F5** ⇨ menu:

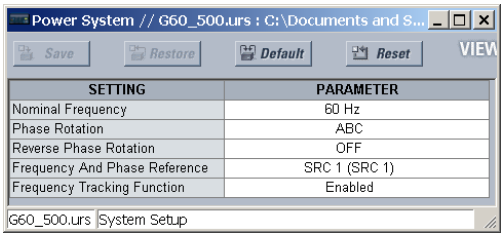

9.1.4 SIGNAL SOURCES

Two sources are required for this application example. The “LINE” source uses the phase and auxiliary VT inputs and the CT input wired to the generator output CT. The “NEUTRL” source uses the phase VT inputs and the CT input wired to the generator neutral CT. Including the phase VT inputs for both sources allows the user to choose the location of elements that use both voltage and current. Elements using the auxiliary VT input are assigned to the “NEUTRL” source.

Make the following changes through EnerVista UR Setup or through the **SETTINGS** ⇨⇩ **SYSTEM SETUP** ⇨⇩ **SOURCE 1** and the **SETTINGS** ⇨⇩ **SYSTEM SETUP** ⇨⇩ **SOURCE 2** menus:

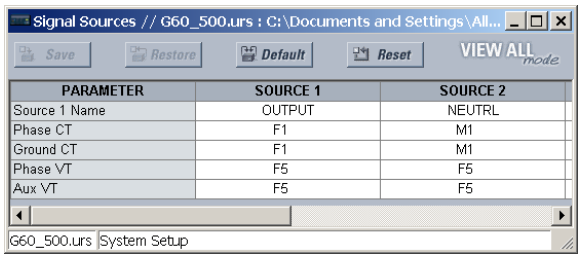

9.1.5 STATOR DIFFERENTIAL

The "LINE" and "NEUTRL" sources are both required for the stator differential element. The minimum pickup can usually be set as low as 0.05 pu (corresponding to 0.25 A secondary or 400 A primary in this example). Set the **STATOR DIFF SLOPE 1** setting to accommodate for CT errors; a setting of 10% is adequate in most instances. Set the **STATOR DIFF SLOPE 2** setting to accommodate for errors due to CT saturation; a setting of 80% is recommended for most applications. The **STATOR DIFF BREAK 1** setting must be greater than the maximum load expected for the machine. The **STATOR DIFF BREAK 2** setting should be set at the level where CT saturation is expected to occur.

Make the following parameter changes in EnerVista UR Setup or through the **SETTINGS** ⇨⇩ **GROUPED ELEMENTS** ⇨⇩ **SETTING GROUP 1** ⇨⇩ **STATOR DIFFERENTIAL** ⇨ menu:

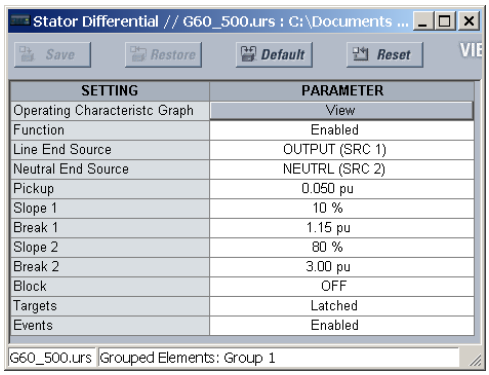

9.1.6 GENERATOR UNBALANCE

Stage 1 of the generator unbalance element is typically used to trip the generator. In this example, the I_2 capability of the machine is 8% and the I_2^2T capability is 10. The generator nominal current is:

$$I_{nom(\text{pu})} = \frac{I_{nom}\ \text{primary}}{\text{CT primary}} = \frac{6800\ \text{A}}{8000\ \text{A}} = 0.85\ \text{pu} \quad \textbf{(EQ 9.5)}$$

The minimum operate time of stage 1 will be set to 0.25 seconds, the maximum operating time will be 10 minutes, and the reset time will be set to 4 minutes.

Stage 2 is typically set lower than stage 1 with a time delay to prevent nuisance alarms for external faults that are normally cleared by system protection. For the application example, the pickup setting is:

$$\text{Pickup} = 70\% \times I_2\ \text{capability} = 0.70 \times 8\% = 5.6\% \quad \textbf{(EQ 9.6)}$$

Source 2 will be chosen for this element. The settings are as follows:

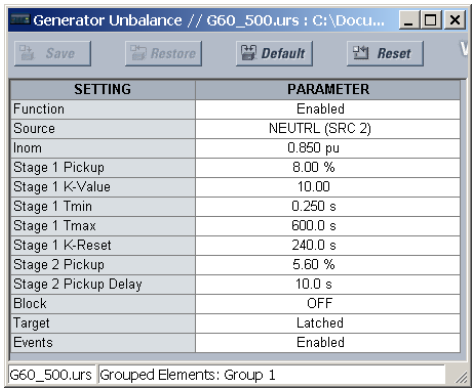

SETTING	PARAMETER
Function	Enabled
Source	NEUTRL (SRC 2)
Inom	0.850 pu
Stage 1 Pickup	8.00 %
Stage 1 K-Value	10.00
Stage 1 Tmin	0.250 s
Stage 1 Tmax	600.0 s
Stage 1 K-Reset	240.0 s
Stage 2 Pickup	5.60 %
Stage 2 Pickup Delay	10.0 s
Block	OFF
Target	Latched
Events	Enabled

9.1.7 LOSS OF EXCITATION

For the example system, we have the following values:

$$Z_{b(\text{sec})} = \frac{\text{base kV}^2}{\text{base MVA}} \times \frac{\text{CT ratio}}{\text{VT ratio}} = \frac{(18\ \text{kV})^2}{211.765\ \text{MVA}} \times \frac{1600}{157.5} = 15.54\ \Omega \quad \textbf{(EQ 9.7)}$$

$$X_d'(\text{sec}) = X_d' \times Z_b(\text{sec}) = 0.216 \times 15.54\ \Omega = 3.36\ \Omega \quad \textbf{(EQ 9.8)}$$

$$X_d(\text{sec}) = X_d \times Z_b(\text{sec}) = 1.967 \times 15.54\ \Omega = 30.57\ \Omega \quad \textbf{(EQ 9.9)}$$

$$\text{CENTER 1} = \frac{Z_b(\text{sec}) + X_d'(\text{sec})}{2} = \frac{15.54\Omega + 3.36\Omega}{2} = 9.45\ \Omega \quad \textbf{(EQ 9.10)}$$

$$\text{RADIUS 1} = \frac{Z_b(\text{sec})}{2} = \frac{15.54\ \Omega}{2} = 7.77\ \Omega \quad \textbf{(EQ 9.11)}$$

$$\text{PICKUP DELAY 1} = 0.06\ \text{seconds} \quad \textbf{(EQ 9.12)}$$

$$\text{CENTER 2} = \frac{X_d(\text{sec}) + X_d'(\text{sec})}{2} = \frac{30.57\Omega + 3.36\Omega}{2} = 16.97\ \Omega \quad \textbf{(EQ 9.13)}$$

$$\text{RADIUS 2} = \frac{X_d(\text{sec})}{2} = \frac{30.57\ \Omega}{2} = 15.28\ \Omega \quad \textbf{(EQ 9.14)}$$

The voltage supervision setting will be determined by a system study and may be disabled on either element if required. VT fuse failure should supervise this element.

The choice of source is not critical for this application. The NEUTRL source is chosen for the following setting changes. Make the following changes in EnerVista UR Setup or through the **SETTINGS ⇨⇩ GROUPED ELEMENTS ⇨⇩ SETTING GROUP 1 ⇨⇩ LOSS OF EXCITATION** menu:

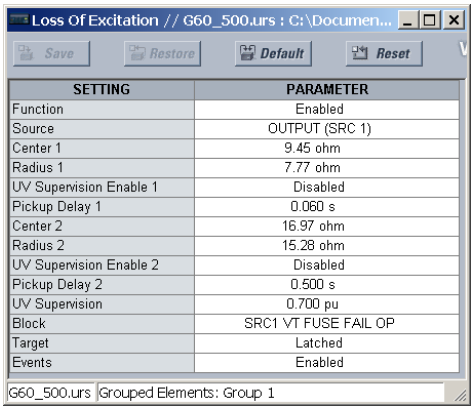

SETTING	PARAMETER
Function	Enabled
Source	OUTPUT (SRC 1)
Center 1	9.45 ohm
Radius 1	7.77 ohm
UV Supervision Enable 1	Disabled
Pickup Delay 1	0.060 s
Center 2	16.97 ohm
Radius 2	15.28 ohm
UV Supervision Enable 2	Disabled
Pickup Delay 2	0.500 s
UV Supervision	0.700 pu
Block	SRC1 VT FUSE FAIL OP
Target	Latched
Events	Enabled

9.1.8 REVERSE POWER

The reverse power element should be set at ½ the rated motoring power. The pickup is calculated as follows:

$$S_{min} = \frac{1}{2} \times \frac{\text{Rated Motoring Power (primary watts)}}{3 \times \text{Phase CT Primary} \times \text{Phase VT Ratio} \times \text{Phase VT Secondary}} \quad \textbf{(EQ 9.15)}$$

For the example system: $S_{min} = \frac{1}{2} \times \frac{22 \times 10^6 \text{ W}}{3 \times 8000 \text{ A} \times 157.5 \times 66 \text{ V}} = 0.044 \text{ pu}$

To prevent maloperation for power swings the element is typically time delayed by 20 to 30 seconds. For sequential tripping applications the time delay will be 2 to 3 seconds. The element may be blocked when the generator is offline. The line source will be used for this application. Make the following changes in EnerVista UR Setup or through the **SETTINGS ⇨⇩ GROUPED ELEMENTS ⇨⇩ SETTING GROUP 1 ⇨⇩ SENSITIVE DIRECTIONAL POWER ⇨ DIRECTIONAL POWER 1** menu:

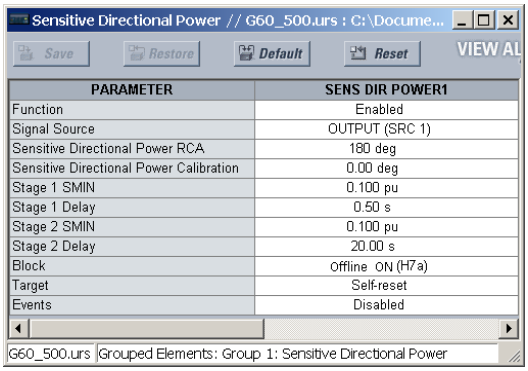

PARAMETER	SENS DIR POWER1
Function	Enabled
Signal Source	OUTPUT (SRC 1)
Sensitive Directional Power RCA	180 deg
Sensitive Directional Power Calibration	0.00 deg
Stage 1 SMIN	0.100 pu
Stage 1 Delay	0.50 s
Stage 2 SMIN	0.100 pu
Stage 2 Delay	20.00 s
Block	Offline ON (H7a)
Target	Self-reset
Events	Disabled

Sequential tripping logic can be implemented in FlexLogic as follows:

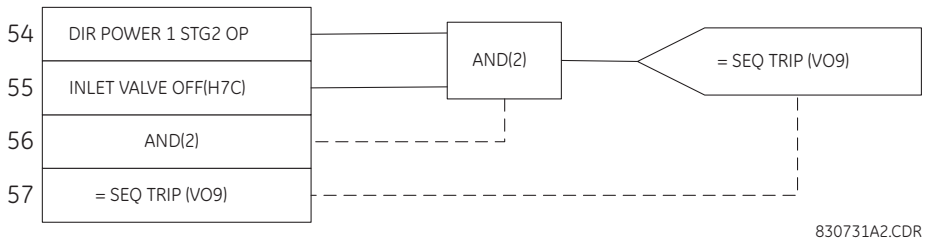

Figure 9–2: SEQUENTIAL TRIPPING FLEXLOGIC

9.1.9 SYSTEM BACKUP OVERCURRENT

System backup protection is implemented using a phase time overcurrent element with voltage restraint enabled. The NEUTRL source will be chosen for this element. The pickup of this element should be set at a safe margin above the maximum load expected on the machine.

$$\text{PICKUP} = 1.5 \times \frac{\text{Generator Nominal Current}}{\text{CT Primary}} = 1.5 \times \frac{6800}{8000} = 1.275 \text{ pu} \quad \textbf{(EQ 9.16)}$$

The selection of all standard curves (and FlexCurves™) is allowed for easy coordination with system relaying. For the example system, an IEEE extremely inverse curve will be used and a setting will be chosen such that the operate time for a three phase fault on the high side of the transformer is 0.75 seconds. For simplicity, the power system contribution is not considered.

$$\text{Transformer Impedance} = 0.10 \times \frac{211.765}{200} = 0.106 \text{ pu on machine base} \quad \textbf{(EQ 9.17)}$$

$$\text{Impedance to Fault} = 0.216 + 0.106 = 0.322 \text{ pu} \quad \textbf{(EQ 9.18)}$$

$$\text{Fault Current} = \frac{V}{X} = \frac{1}{0.322} \times \frac{6800}{8000} = 2.64 \text{ pu} \quad \textbf{(EQ 9.19)}$$

$$\text{Fault Voltage} = \text{Nominal Voltage} \times \frac{\text{Transformer Impedance}}{\text{Total Impedance}} = 18 \text{ kV} \times \frac{10.6}{32.2} = 5.93 \text{ kV} \quad \textbf{(EQ 9.20)}$$

$$\text{Pickup Reduction} = \frac{\text{Fault Voltage}}{\text{Generator Nominal Voltage}} = \frac{5.93 \text{ kV}}{18 \text{ kV}} = 0.329 \quad \textbf{(EQ 9.21)}$$

The equation for an IEEE extremely inverse curve is as follows:

$$T = \text{TDM} \times \left[\frac{A}{\left(\frac{I}{I_{pickup} \times \text{Pickup Reduction}} \right)^{p} - 1} + B \right] \quad \textbf{(EQ 9.22)}$$

where $A = 28.2$, $B = 0.1217$, and $p = 2$. Solving for TDM, we have:

$$\text{TDM} = \frac{0.75}{\frac{28.2}{\left(\frac{2.64}{1.275 \times 0.329} \right)^{2} - 1} + 0.1217} = 0.88 \quad \textbf{(EQ 9.23)}$$

Since this element will coordinate with system protections a timed reset is chosen. The element must be blocked for a VT fuse failure. The neutral source will be chosen. Make the following changes in EnerVista UR Setup or through the **SETTINGS** ⇨⇩ **GROUPED ELEMENTS** ⇨⇩ **SETTING GROUP 1** ⇨⇩ **PHASE CURRENT** ⇨ **PHASE TOC1** menu:

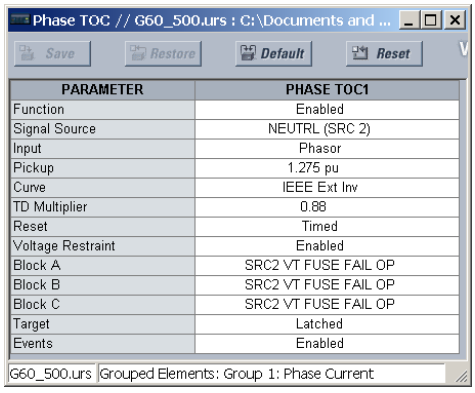

PARAMETER	PHASE TOC1
Function	Enabled
Signal Source	NEUTRL (SRC 2)
Input	Phasor
Pickup	1.275 pu
Curve	IEEE Ext Inv
TD Multiplier	0.88
Reset	Timed
Voltage Restraint	Enabled
Block A	SRC2 VT FUSE FAIL OP
Block B	SRC2 VT FUSE FAIL OP
Block C	SRC2 VT FUSE FAIL OP
Target	Latched
Events	Enabled

9.1.10 BACKUP DISTANCE

This function provides time-delayed protection for system faults that have not been cleared by system protections and to provide backup protection for stator faults.

The “Line” source will be used in this example to permit the application of a forward and reverse zone. The memory duration will be left at the default setting (10 cycles).

Zone 1 will look forward and cover the GSU and the transmission line leaving the station. Zone 3 will look in the reverse direction and cover the stator winding. Zone 2 will not be used in this example. Both the VTs and the CTs are located on the low voltage side of the GSU. The transformer vector diagram (see figure 9-1) shows this transformer to be Yd1. Consequently, due to the location of instrument transformers, Dy11 is chosen for both the **XFMR VOL CONNECTION** and **XFMR CUR CONNECTION** settings. There are no transformers in the reverse direction. Therefore “None” is chosen for both of the zone 3 transformer connection settings. The reach of the zone 1 element will be set at 120% of impedance of the GSU and the transmission line. In the instance that there are multiple lines and/or multiple generators, the zone 1 reach must be increased to compensate for the infeed effect.

$$\text{Transformer impedance} = X_T \times \frac{V_L^2}{\text{MVA}_T} = j0.1 \times \frac{(18)^2}{200} = j0.162 \text{ primary ohms} \quad \textbf{(EQ 9.24)}$$

$$\text{Line impedance} = X_L \times \frac{V_L^2}{V_H^2} = (15 + j75) \times \frac{(18)^2}{(138)^2} = 0.255 + j1.276 \text{ primary ohms} \quad \textbf{(EQ 9.25)}$$

$$\begin{aligned} \text{Zone 1 reach} &= 1.2 \times (\text{Transformer impedance} + \text{Line impedance}) \times \frac{\text{CT ratio}}{\text{VT ratio}} \\ &= 1.2 \times (j0.162 + 0.255 + j1.276) \times \frac{1600}{157.5} = 17.8\angle 80° \text{ secondary ohms} \end{aligned} \quad \textbf{(EQ 9.26)}$$

The zone 3 reach will be set at 120% of the generator transient reactance. The time delay of this element should be compared to the generator decrement curve to verify the adequacy of this setting.

$$\text{Generator impedance} = X'_d \times \frac{V_L^2}{\text{MVA}_G} = j1.967 \times \frac{(18)^2}{211} = j3.01 \text{ primary ohms} \quad \textbf{(EQ 9.27)}$$

$$\begin{aligned} \text{Zone 3 reach} &= 1.2 \times \text{Generator impedance} \times \frac{\text{CT ratio}}{\text{VT ratio}} \\ &= 1.2 \times j3.01 \times \frac{1600}{157.5} = j36.68 \text{ secondary ohms} \end{aligned} \quad \textbf{(EQ 9.28)}$$

An mho shape has been chosen for this example. Therefore, the quadrilateral settings are left at their default values. Make the following changes in EnerVista UR Setup or through the **SETTINGS ⇨⇩ GROUPED ELEMENTS ⇨⇩ SETTING GROUP 1 ⇨⇩ DISTANCE ⇨ PHASE DISTANCE Z1(3)** menus:

Phase Distance // G60.urs : D:\Users\Public\Documents\GE Power Management\URPC\Offline\g60\: Grouped Elements: Group 1: Distance

Save | Restore | Default | Reset | VIEW ALL mode

PARAMETER	PHASE DISTANCE Z1	PHASE DISTANCE Z2	PHASE DISTANCE Z3
Distance Shape Graph	View	View	View
Function	Enabled	Disabled	Enabled
Direction	Forward	Forward	Reverse
Shape	Mho	Mho	Mho
Xfmr Vol Connection	Dy11	None	None
Xfmr Curr Connection	Dy11	None	None
Reach	17.80 ohms	2.00 ohms	36.68 ohms
RCA	80 deg	85 deg	90 deg
Rev Reach	2.00 ohms	2.00 ohms	2.00 ohms
Rev Reach RCA	90 deg	85 deg	85 deg
Comp Limit	90 deg	90 deg	90 deg
DIR RCA	80 deg	85 deg	90 deg
DIR Comp Limit	90 deg	90 deg	90 deg
Quad Right Blinder	10.00 ohms	10.00 ohms	10.00 ohms
Quad Right Blinder RCA	85 deg	85 deg	85 deg
Quad Left Blinder	10.00 ohms	10.00 ohms	10.00 ohms
Quad Left Blinder RCA	85 deg	85 deg	85 deg
Supervision	0.200 pu	0.200 pu	0.200 pu
Volt Level	0.000 pu	0.000 pu	0.000 pu
Delay	0.600 s	0.000 s	0.600 s
Block	SRC1 VT FUSE FAIL OP	OFF	SRC1 VT FUSE FAIL OP
Target	Latched	Self-reset	Self-reset
Events	Enabled	Disabled	Disabled

G60.urs | Grouped Elements: Group 1: Distance | Screen ID: 13

9.1.11 STATOR GROUND FAULT

a) AUXILIARY OVERVOLTAGE

Stator ground fault protection is implemented with an overvoltage element connected at the generator neutral resistor. The auxiliary overvoltage element will be used in this example. The auxiliary voltage input has previously been assigned to the NEUTRL source. In this example the element will be set to protect 97% of the stator against ground faults.

$$\text{PICKUP} = 0.03 \times \frac{\text{Nominal Phase} - \text{Ground Voltage}}{\text{Ground VT Primary}} = 0.03 \times \frac{18000/\sqrt{3}}{12000} = 0.026 \text{ pu} \quad \textbf{(EQ 9.29)}$$

The time delay should be longer than the longest normal clearing time for faults outside the generator zone. If the phase VTs are wye-connected then this element should also be coordinated with VT secondary fuses to prevent false operations for VT secondary ground faults. For the sample system a time delay of 1 second will be used. Make the following changes in EnerVista UR Setup or through the **SETTINGS ⇨⇩ GROUPED ELEMENTS ⇨ SETTING GROUP 1 ⇨⇩ VOLTAGE ELEMENTS ⇨⇩ AUXILIARY OV1** menu:

Auxiliary OV // G60_500.urs : C:\Documents and...

Save | Restore | Default | Reset

PARAMETER	AUXILIARY OV 1
Function	Enabled
Source	NEUTRL (SRC 2)
Pickup	0.026 pu
Pickup Delay	1.00 s
Reset Delay	1.00 s
Block	OFF
Target	Latched
Events	Enabled

G60_500.urs | Grouped Elements: Group 1: Voltage Elements

b) 100% STATOR GROUND

The auxiliary voltage input is required for both the 100% stator ground and the third harmonic neutral undervoltage elements. Therefore the NEUTRL source will be assigned for these elements. Make the following changes in the **SETTINGS ⇨⇩ GROUPED ELEMENTS ⇨⇩ SETTING GROUP 1 ⇨⇩ STATOR GROUND** menu

STATOR GROUND SOURCE: "SRC 2" (the "NEUTRL" source)

This 100% stator ground element provides ground fault protection for the neutral end of the stator winding. The element has two stages. In this application, stage 1 is used to trip the machine and stage 2 is used for alarm purposes. Set the pickup to 0.15 for both stages to provide adequate overlap with the auxiliary overvoltage element. Set stage 1 to 0.375 V secondary (this value may be increased for security in particularly noisy environments). Stage 2 is typically set at 0.3 V secondary. The supervision settings are expressed in per unit of the **NOMINAL PHASE VT SECONDARY** setting. The time delay settings are 5 seconds and 1 second for the Stage 1 and Stage 2 elements respectively.

$$\text{STG1 SUPV} = \frac{0.375\ \text{V}}{66\ \text{V}} = 0.0057\ \text{pu}, \quad \text{STG2 SUPV} = \frac{0.300\ \text{V}}{66\ \text{V}} = 0.0045\ \text{pu} \qquad \textbf{(EQ 9.30)}$$

Make the following changes in EnerVista UR Setup or through the **SETTINGS ⇨⇩ GROUPED ELEMENTS ⇨⇩ SETTING GROUP 1 ⇨⇩ STATOR GROUND ⇨ 100% STATOR GROUND** menu:

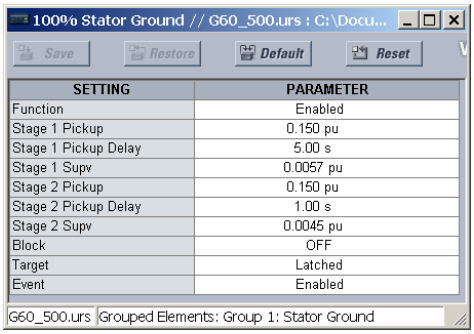

c) THIRD HARMONIC NEUTRAL UNDERVOLTAGE

If the phase VTs are delta connected then third harmonic voltage cannot be measured and the 100% stator ground element cannot be used. In this case the third harmonic neutral undervoltage element can be used. Field measurements should be taken over the entire operating range of the machine to determine the variation of the third harmonic voltage as shown below:

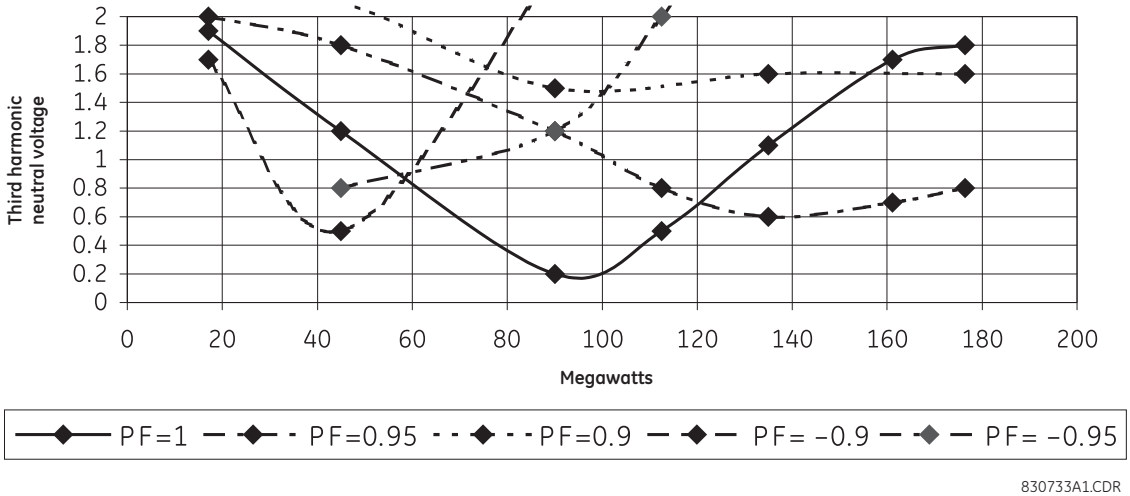

Figure 9–3: THIRD HARMONIC NEUTRAL UNDERVOLTAGE FIELD MEASUREMENTS

The element is accurate for levels as low as 0.25 volts, secondary. In this case, the pickup setting will be:

$$\text{PICKUP} = \frac{0.25\ \text{V}}{240\ \text{V}} = 0.001\ \text{pu} \qquad \textbf{(EQ 9.31)}$$

The third harmonic will dip below the pickup setting between 95 and 105 megawatts. The element should be blocked over this range. A margin of 5% should be added to the relay settings. The values for maximum and minimum power will be:

$$\text{Max Power} = 1.05 \times \frac{105 \times 10^6}{3 \times 8000 \times 157.5 \times 66} = 0.441 \text{ pu} \quad \textbf{(EQ 9.32)}$$

$$\text{Min Power} = 0.95 \times \frac{85 \times 10^6}{3 \times 8000 \times 157.5 \times 66} = 0.323 \text{ pu} \quad \textbf{(EQ 9.33)}$$

Voltage supervision will be given a setting of 0.8 pu in order to prevent maloperation during a sustained undervoltage condition. A time delay of 5 seconds will be applied. If required, the element may be blocked when the machine is offline. Make the following changes in EnerVista UR Setup or through the **SETTINGS ⇨⇩ GROUPED ELEMENTS ⇨⇩ SETTING GROUP 1 ⇨⇩ STATOR GROUND ⇨ 3RD HARM NTRL UNDERVOLTAGE** menu:

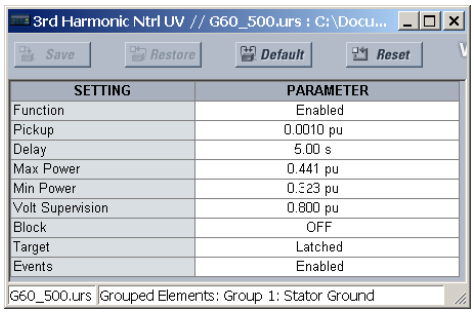

9.1.12 OVEREXCITATION

This protection should be set to coordinate with the manufacturers excitation capability curves. For example system, the combined generator/GSU limit curve is shown below:

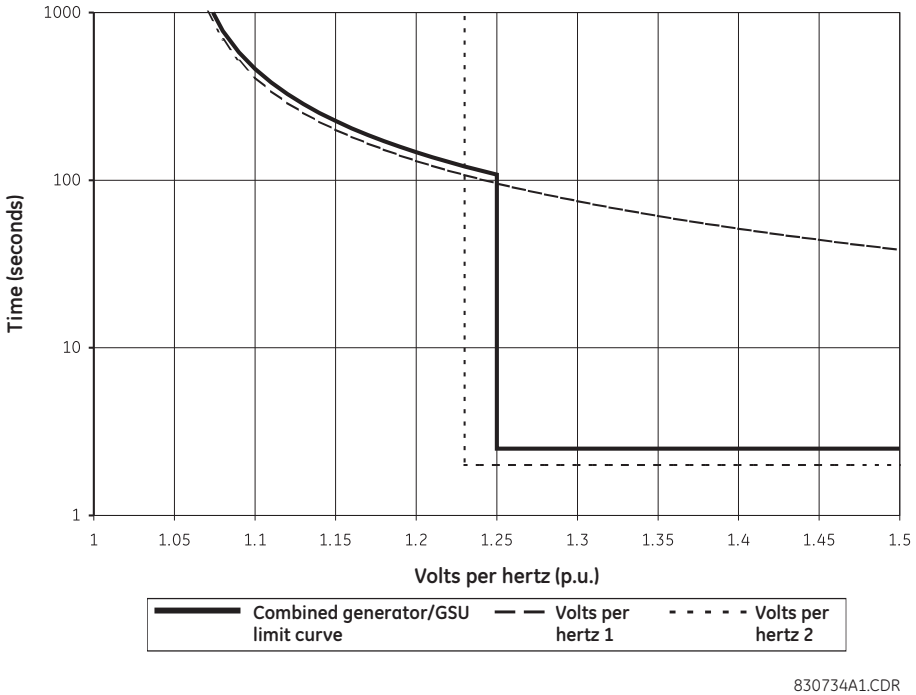

Figure 9–4: GENERATOR/GSU LIMIT CURVE

Program the volts per hertz 1 element with an inverse characteristic (curve A), a pickup of 1.05, and a TDM of 40. Program the volts per hertz 2 element with a definite time characteristic, a pickup of 1.23, and a time delay of 2 seconds. Both elements will issue a trip. The volts per hertz 1 pickup will be used to generate an alarm. Either source may be assigned in this example. Make the following changes in EnerVista UR Setup or through the **SETTINGS ⇨⇩ GROUPED ELEMENTS ⇨⇩ SETTING GROUP 1 ⇨⇩ VOLTAGE ELEMENTS ⇨ VOLTS/HZ 1(2)** menus:

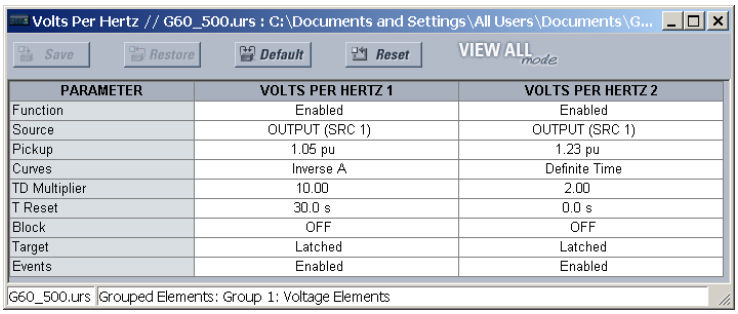

9.1.13 INPUTS/OUTPUTS

The following inputs and outputs will be used in this example. Make the following changes in EnerVista UR Setup or through the **SETTINGS ⇨⇩ INPUTS/OUTPUTS ⇨ CONTACT INPUTS ⇨ CONTACT INPUT H7a(H7c)** menus:

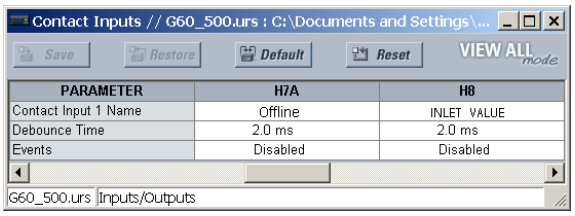

Make the following changes in EnerVista UR Setup or through the **SETTINGS ⇨⇩ INPUTS/OUTPUTS ⇨⇩ VIRTUAL OUTPUTS ⇨ VIRTUAL OUTPUT 1(4)** menus:

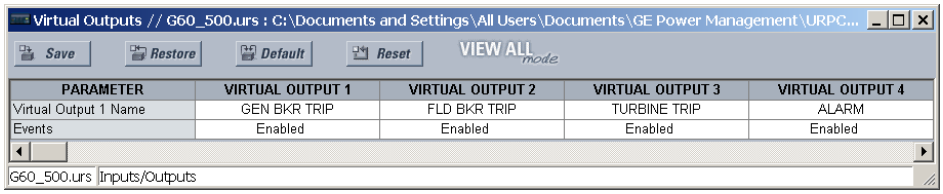

Make the following changes in EnerVista UR Setup or through the **SETTINGS** ⇨⇩ **INPUTS/OUTPUTS** ⇨⇩ **CONTACT OUTPUTS** ⇨ **CONTACT OUTPUT H1(H4)** menus:

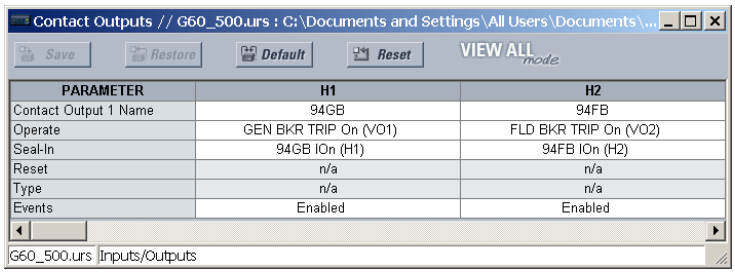

PARAMETER	H1	H2
Contact Output 1 Name	94GB	94FB
Operate	GEN BKR TRIP On (VO1)	FLD BKR TRIP On (VO2)
Seal-In	94GB IOn (H1)	94FB IOn (H2)
Reset	n/a	n/a
Type	n/a	n/a
Events	Enabled	Enabled

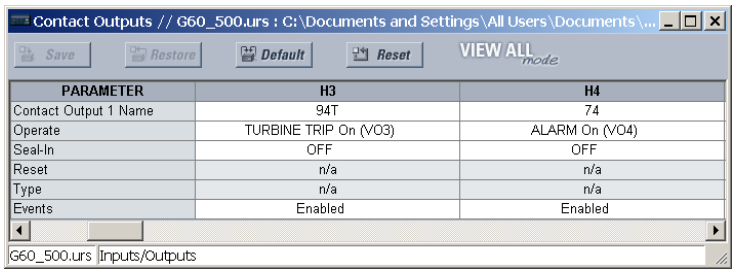

PARAMETER	H3	H4
Contact Output 1 Name	94T	74
Operate	TURBINE TRIP On (VO3)	ALARM On (VO4)
Seal-In	OFF	OFF
Reset	n/a	n/a
Type	n/a	n/a
Events	Enabled	Enabled

9.1.14 FREQUENCY

The pickup and delay settings are dependent on operating practices and system characteristics. In this example, two overfrequency and two underfrequency elements will be used. The elements will be blocked when offline. Underfrequency will initiate a trip. Overfrequency will alarm only. Either source may be assigned.

Make the following changes in EnerVista UR Setup or through the **SETTINGS ⇨⇩ CONTROL ELEMENTS ⇨⇩ UNDERFREQUENCY ⇨ UNDERFREQUENCY 1(2)** and the **SETTINGS ⇨⇩ CONTROL ELEMENTS ⇨⇩ OVERFREQUENCY ⇨ OVERFREQUENCY 1(2)** menus:

Underfrequency // G60_500.urs : C:\Documents and Settings\All Users\Documents\GE Power Management\URPC\Data\: Control Elements

Save | Restore | Default | Reset | VIEW ALL mode

PARAMETER	UNDERFREQUENCY 1	UNDERFREQUENCY 2	UNDERFREQUENCY 3	UNDERFREQUENCY 4
Function	Enabled	Enabled	Enabled	Enabled
Block	Offline On(H7a)	Offline On(H7a)	Offline On(H7a)	Offline ON(H7a)
Source	OUTPUT (SRC 1)	OUTPUT (SRC 1)	OUTPUT (SRC 1)	OUTPUT (SRC 1)
Min Volt/Amp	0.10 pu	0.10 pu	0.10 pu	0.10 pu
Pickup	59.00 Hz	58.00 Hz	57.00 Hz	56.00 Hz
Pickup Delay	65.000 s	30.000 s	10.000 s	1.000 s
Reset Delay	0.000 s	0.000 s	0.000 s	0.000 s
Target	Latched	Latched	Latched	Latched
Events	Enabled	Enabled	Enabled	Enabled

G60_500.urs | Control Elements

Overfrequency // G60_500.urs : C:\Documents and Settings\All Users\Documents\G...

Save | Restore | Default | Reset | VIEW ALL mode

PARAMETER	OVERFREQUENCY 1	OVERFREQUENCY 2
Function	Enabled	Enabled
Block	52B On(H7a)	52B On(H7a)
Source	OUTPUT (SRC 1)	OUTPUT (SRC 1)
Pickup	61.00 Hz	62.00 Hz
Pickup Delay	60.000 s	30.000 s
Reset Delay	0.000 s	0.000 s
Target	Latched	Latched
Events	Enabled	Enabled

G60_500.urs | Control Elements

9.1.15 ACCIDENTAL ENERGIZATION

In this example, the **ACCDNT ENRG ARMING MODE** is selected as “UV and Offline”. The **ACCDNT ENRG OC PICKUP** setting should be set at ½ the minimum expected fault current. In this case, 1.0 pu (8000 A primary) is selected. In cases where it is possible to re-energize the machine through its auxiliary transformer, a lower setting may be required. The undervoltage pickup setting must be set above the maximum expected fault voltage.

Make the following changes in EnerVista UR Setup or through the **SETTINGS ⇨⇩ GROUPED ELEMENTS ⇨⇩ SETTING GROUP 1 ⇨⇩ ACCIDENTAL ENERGIZATION** menu:

Accidental Energization // G60_500.urs : C:\Documents ...

Save | Restore | Default | Reset | VIEW AL

SETTING	PARAMETER
Function	Enabled
Source	OUTPUT (SRC 1)
Accidental Energization Arming Mode	UV AND OFFLINE
Accidental Energization OC Pickup	1.000
Accidental Energization UV Pickup	0.700
Accidental Energization Offline	Offline On(H7a)
Block	OFF
Target	Latched
Events	Enabled

G60_500.urs | Grouped Elements: Group 1

9.1.16 FLEXLOGIC

The following logic as given as an example only. The logic for each specific application will be dependent on system design, protection philosophies, and operating practices.

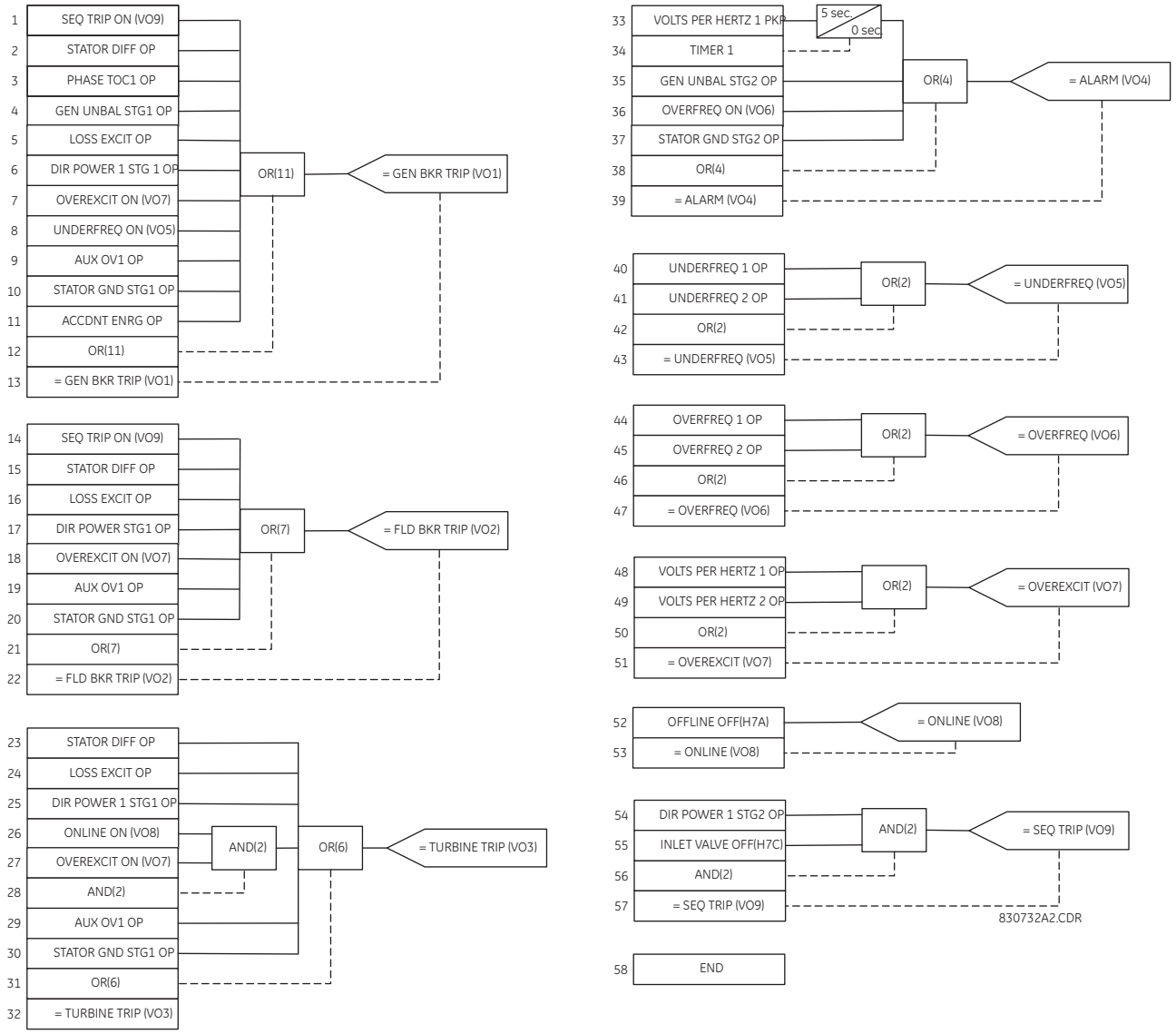

Figure 9–5: APPLICATION EXAMPLE FLEXLOGIC

a) APPLICATION DESCRIPTION

Phase distance elements of the G60 could be set to respond to faults beyond any three-phase power transformer. The relay guarantees accurate reach and targeting for any phase fault. Moreover, the current and voltage transformers may be located independently on different sides of the transformer.

The following setting rules apply to this feature:

1. A given distance zone is terminated by location of the VTs, not the CTs.
2. Consequently, the positive-sequence impedance of a transformer must be included in the reach setting only if the transformer is located between the potential source and the intended reach point.
3. The current signals require compensation if the transformer is located between the CTs and the intended reach point. If this is the case the CT connection setting shall be set to transformer connection and vector group as seen from the CTs toward the reach point. Otherwise, the CT connection setting shall be set to "None".
4. The voltage signals require compensation if the transformer is located between the VTs and the intended reach point. If this is the case the VT connection setting shall be set to transformer connection and vector group as seen from the VTs toward the reach point. Otherwise, the VT connection setting shall be set to "None".
5. The reach setting is entered in secondary ohms and as such must take into account location and ratios of VTs and CTs as well as voltage ratio of the involved power transformer.

The following equations explain the setting rules. Consider two applications as shown in the figure below:

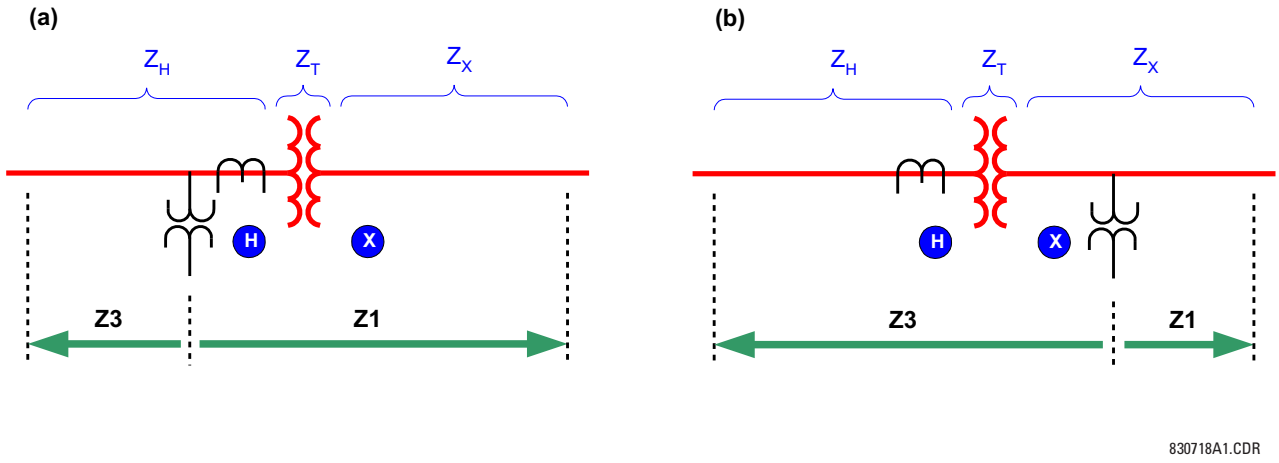

Figure 9–6: PHASE DISTANCE PROTECTION LOOKING THROUGH A POWER TRANSFORMER

where: Z_X = intended reach impedance for Zone 1 (primary ohms)
Z_H = intended reach impedance for Zone 3 (primary ohms)
Z_T = positive-sequence impedance of the transformer
V_X, V_H = transformer rated voltages
n_{CT} = transformation ratio of the CTs
n_{VT} = transformation ratio of the VTs
Z1: Z1 reach setting (secondary ohms)
Z3: Zone 3 reach setting (secondary ohms)

b) ZONE 1 SETTING IN APPLICATION (A)

As the transformer is located between the potential source and the reach point for Zone 1, the reach impedance must include the positive-sequence impedance of the transformer. In addition, the primary impedance must be re-calculated for the voltage level of the VTs and CTs, and eventually, re-calculated to secondary quantities:

$$Z_1 = (Z_T(\text{at X}) + Z_x) \times \left(\frac{V_H}{V_X}\right)^2 \times \frac{n_{CT}}{n_{VT}} \quad \textbf{(EQ 9.34)}$$

c) ZONE 3 SETTING IN APPLICATION (A)

As the transformer is not located between the potential source and the reach point for Zone 3, the reach impedance must not include the positive-sequence impedance of the transformer. Because both VTs and CTs are located on the same side as the intended reach point, no correction for the transformer ratio is required. The primary impedance must be only re-calculated to secondary quantities:

$$Z_3 = Z_H \times \frac{n_{CT}}{n_{VT}} \quad \textbf{(EQ 9.35)}$$

d) ZONE 1 SETTING IN APPLICATION (B)

As the transformer is not located between the potential source and the reach point for Z1, the reach impedance must not include the positive-sequence impedance of the transformer. The CTs are located on the other side of the transformer, thus transformer ratio must be included:

$$Z_1 = Z_X \times \left(\frac{V_H}{V_X}\right) \times \frac{n_{CT}}{n_{VT}} \quad \textbf{(EQ 9.36)}$$

e) ZONE 3 SETTING IN APPLICATION (B)

As the transformer is located between the potential source and the reach point for Zone 3, the reach impedance must include the positive-sequence impedance of the transformer. The VTs are located on the other side of the transformer, thus transformer ratio must be included:

$$Z_3 = (Z_T(\text{at H}) + Z_H) \times \left(\frac{V_X}{V_H}\right) \times \frac{n_{CT}}{n_{VT}} \quad \textbf{(EQ 9.37)}$$

9.2.2 EXAMPLE

Given the following for the system shown in the previous section:

Z_X = 30 Ω ∠85° (intended reach of Zone 1)
Z_H = 0.06 Ω ∠88° (intended reach of Zone 3)
n_{CT} = 8000:5 = 1600 (located at H)
n_{VT} = 315000:120 = 2625 (located at X)
Transformer: 13.8/315 kV, 150 MVA, 10%, delta/wye, 315 kV side lagging 30°

Transformer impedance:

$$Z_T(\text{at H}) = \frac{10}{100} \times \frac{(13.8)^2}{150} = 0.127\Omega\angle 90° \quad \textbf{(EQ 9.38)}$$

The Zone 1 settings are:

$$Z_1 = 30 \times \frac{13.8}{315} \times \frac{1600}{2625} = 0.8011\Omega\angle 85° \quad \textbf{(EQ 9.39)}$$

PHS DIST Z1 REACH: "0.80"
PHS DIST Z1 RCA: "85"
PHS DIST Z1 XMFR VOL CONNECTION: "None"
PHS DIST Z1 XMFR CUR CONNECTION: "Dy1"

The Zone 3 settings are:

$$Z_3 = (0.127\angle 90° + 0.006\angle 88°) \times \frac{315}{13.8} \times \frac{1600}{2625} = 2.601\Omega\angle 89.4° \quad \textbf{(EQ 9.40)}$$

PHS DIST Z3 REACH: "2.60"
PHS DIST Z3 RCA: "89"
PHS DIST Z3 XMFR VOL CONNECTION: "Yd11"
PHS DIST Z3 XMFR CUR CONNECTION: "None"

10.1.1 TESTING UNDERFREQUENCY AND OVERFREQUENCY ELEMENTS

Underfrequency and overfrequency protection requires techniques with subtle testing implications. Whereas most protection is designed to detect changes from normal to fault conditions that occur virtually instantaneously, power system inertia requires frequency protection to pickup while the frequency is changing slowly. Frequency measurement is inherently sensitive to noise, making high precision in combination with high speed challenging for both relays and test equipment.

Injection to a particular G60 frequency element must be to its configured source and to the channels the source uses for frequency measurement. For frequency measurement, a source will use the first quantity configured in the following order:

1. Phase voltages
2. Auxiliary voltage
3. Phase currents
4. Ground current

For example, if only auxiliary voltage and phase currents are configured, the source will use the auxiliary voltage, not the phase voltages or any of the currents.

When phase voltages or phase currents are used, the source applies a filter that rejects the zero-sequence component. As such, the same signal must not be injected to all three phases, or the injected signal will be completely filtered out. For an underfrequency element using phase quantities, the phase A signal must be above the **MIN VOLT/AMP** setting value. Therefore, either inject into phase A only, or inject a balanced three-phase signal.

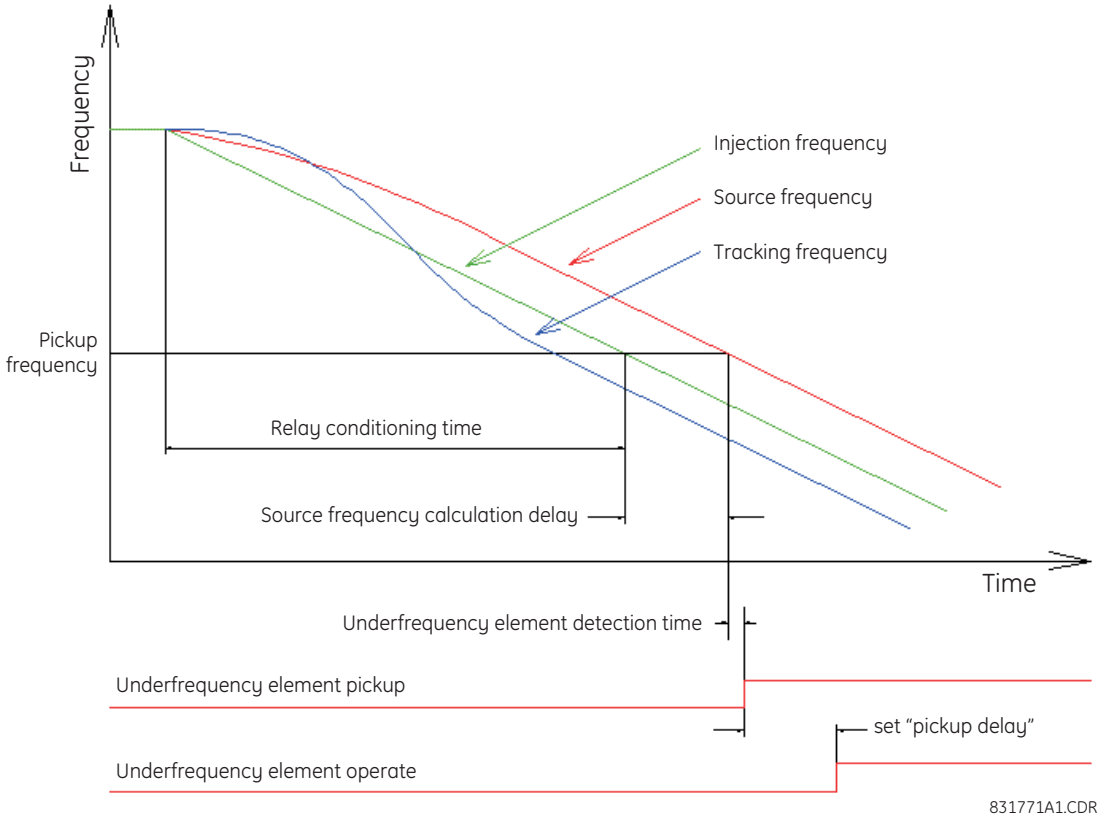

Figure 10–1: TYPICAL UNDERFREQUENCY ELEMENT TEST TIMING

The static accuracy of the frequency threshold may be determined by slowly adjusting the frequency of the injected signal about the set pickup. If the G60 frequency metering feature is used to determine the injected frequency, the metering accuracy should be verified by checking it against a known standard (for example, the power system).

To accurately measure the time delay of a frequency element, a test emulating realistic power system dynamics is required. The injected frequency should smoothly ramp through the set threshold, with the ramp starting frequency sufficiently outside the threshold so the relay becomes conditioned to the trend before operation. For typical interconnected power systems, the recommended testing ramp rate is 0.20 Hz/s.

The desired delay time is the interval from the point the frequency crosses the set threshold to the point the element operates. Some test sets can measure only the time from the ramp start to element operation, necessitating the subtraction of the pre-threshold ramp time from the reading. For example, with a ramp rate of 0.20 Hz/s, start the ramp 0.20 Hz before the threshold and subtract 1 second from test set time reading of ramp start to relay operation.

Note that the G60 event records only show the “pickup delay” component, a definite time timer. This is exclusive of the time taken by the frequency responding component to pickup.

The G60 oscillography can be used to measure the time between the calculated source frequency crossing the threshold and element operation; however, this method omits the delay in the calculated source frequency. The security features of the source frequency measurement algorithm result in the calculated frequency being delayed by 2 to 4 cycles (or longer with noise on the input). In addition, oscillography resolution is 0.004 Hz, which at 0.20 Hz/s corresponds to a delay of 20 ms. The tracking frequency should not be used in timing measurements, as its algorithm involves phase locking, which purposely sets its frequency high or low to allow the G60 sample clock to catch-up or wait as necessary to reach synchronism with the power system.

WARNING **Withdraw or insert a module only when control power has been removed from the unit, and be sure to insert only the correct module type into a slot, else personal injury, damage to the unit or connected equipment, or undesired operation can result.**

NOTICE To avoid damage to the equipment, use proper electrostatic discharge protection (for example, a static strap) when coming in contact with modules while the relay is energized.

The relay, being modular in design, allows for the withdrawal and insertion of modules. Modules must only be replaced with like modules in their original factory configured slots.

The enhanced faceplate can be opened to the left, once the thumb screw has been removed, as shown below. This allows for easy accessibility of the modules for withdrawal. The new wide-angle hinge assembly in the enhanced front panel opens completely and allows easy access to all modules in the G60.

842812A1.CDR

Figure 11–1: UR MODULE WITHDRAWAL AND INSERTION (ENHANCED FACEPLATE)

The basic faceplate can be opened to the left, once the sliding latch on the right side has been pushed up, as shown below. This allows for easy accessibility of the modules for withdrawal.

842760A1.CDR

Figure 11–2: UR MODULE WITHDRAWAL AND INSERTION (BASIC FACEPLATE)

To properly remove a module, the ejector/inserter clips, located at the top and bottom of each module, must be pulled simultaneously. Before performing this action, **control power must be removed from the relay**. Record the original location of the module to ensure that the same or replacement module is inserted into the correct slot. While modules with current input provide automatic shorting of external CT circuits, for CT/VT modules it is recommended to short/isolate external circuits accordingly for maximum safety.

To properly insert a module, ensure that the **correct** module type is inserted into the **correct** slot position. The ejector/inserter clips located at the top and at the bottom of each module must be in the disengaged position as the module is smoothly inserted into the slot. Once the clips have cleared the raised edge of the chassis, engage the clips simultaneously. When the clips have locked into position, the module will be fully inserted.

NOTE

CPU connections must be individually disconnected from the module before the module can be removed from the chassis.

NOTE

The new CT/VT modules can only be used with new CPUs; similarly, old CT/VT modules can only be used with old CPUs. In the event that there is a mismatch between the CPU and CT/VT module, the relay does not function and a **DSP ERROR** or **HARDWARE MISMATCH** error displays.

A battery powers the real time clock on startup of the device.

When required, the battery can be replaced. The power supply modules were upgraded in 2014 to SH/SL from RH/RL, but the order code when purchasing a UR with redundant power supply remained as RH/RL so that customers can continue to use the same order codes. The order code can read RH or RL, while the module inside the unit reads SH or SL. The order code for replacement redundant power supply modules was changed to SH/SL. To determine which procedure to use, see the power supply module or use the photographs here.

a) REPLACE BATTERY FOR RH/RL POWER SUPPLY

The power supply module contains the battery.

⚠CAUTION **To avoid injury, ensure that the unit has been powered off for a minimum of three minutes before replacing the battery.**

Risk of fire if battery is replaced with incorrect type or polarity.

To replace the battery:

1. Turn off the power to the unit.
2. Wait a minimum of three minutes to ensure that there is no power to the battery.
3. As outlined in the previous section, open the unit by sliding up the plastic latch on the right side of the front panel (basic front panel) or unscrewing the panel (enhanced front panel).
4. For the basic front panel, it needs to be removed in order to access the power supply module, which is typically in the first slot on the left side and blocked by the hinge of the front panel. To remove the front panel, unscrew the bracket on the front left side of the unit.
5. Simultaneously pull the ejector clips at the top and bottom of the power supply module and remove the module.
6. Unscrew the screw that attaches the metal cover to the module.
7. Slide the metal cover away from the clips about 1 cm (1/4 inch) and remove the cover.
8. Unclip the black plastic holder that keeps the battery in place. The plastic clips into the socket at the bottom on both sides. Use a flat-head screwdriver if you cannot unclip the plastic with your fingers.
9. Observe the + and - polarity of the battery and replace it with the same polarity as marked on the battery holder. Replace the battery with the identical make and model. For example, do not use a rechargeable battery.

Figure 11–3: BATTERY LOCATION ON RH/RL POWER SUPPLY MODULE

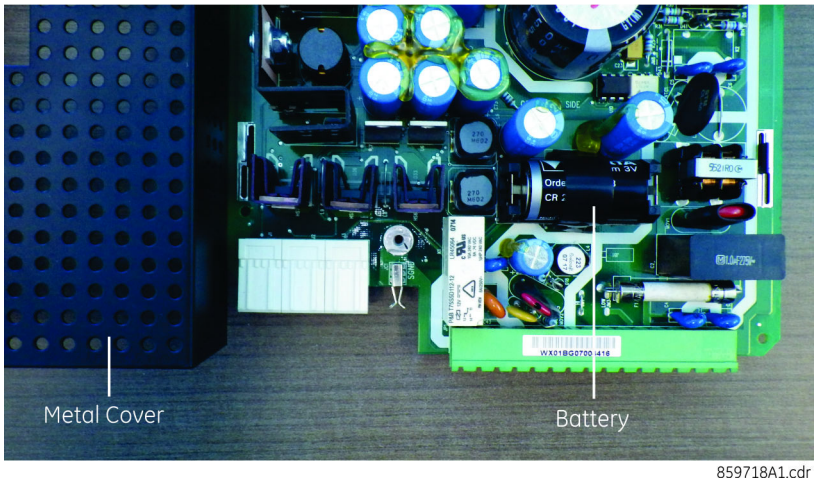

859718A1.cdr

10. Reinstall the battery clip and the metal cover, and reinsert the power supply module into the unit.
11. Power on the unit.
12. Dispose of the old battery as outlined in the next section.

b) REPLACE BATTERY FOR SH/SL POWER SUPPLY

The power supply module contains the battery.

⚠CAUTION **To avoid injury, ensure that the unit has been powered off for a minimum of three minutes before replacing the battery.**

Risk of fire if battery is replaced with incorrect type or polarity.

To replace the battery:

13. Turn off the power to the unit.
14. Wait a minimum of three minutes to ensure that there is no power to the battery.
15. As outlined in the previous section, open the unit by sliding up the plastic latch on the right side of the front panel (basic front panel) or unscrewing the panel (enhanced front panel).
16. For the basic front panel, it needs to be removed in order to access the power supply module, which is typically in the first slot on the left side and blocked by the hinge of the front panel. To remove the front panel, unscrew the bracket on the left side of the unit.
17. Remove the power supply module by simultaneously pulling the ejector clips at the top and bottom of the module and sliding it out.
18. Unscrew all four screws (not three) that attach the metal cover to the module. The fourth screw is at the back end of the module, on the opposite side from the clips, beside the white electronics part (see figure).
19. Slide the metal cover away from the clips about 0.5 cm (1/8 inch) and remove the cover.
20. Unclip the black plastic holder that keeps the battery in place. The plastic clips into the socket at the bottom on both sides—pull the plastic away from the battery. Use a flat-head screwdriver if you cannot unclip the plastic with your fingers.
21. Replace the battery with the identical make and model. For example, do not use a rechargeable battery. Observe the + and - polarity of the battery and replace it with the same polarity as marked on the battery holder.

Figure 11–4: BATTERY LOCATION ON SH/SL POWER SUPPLY MODULE

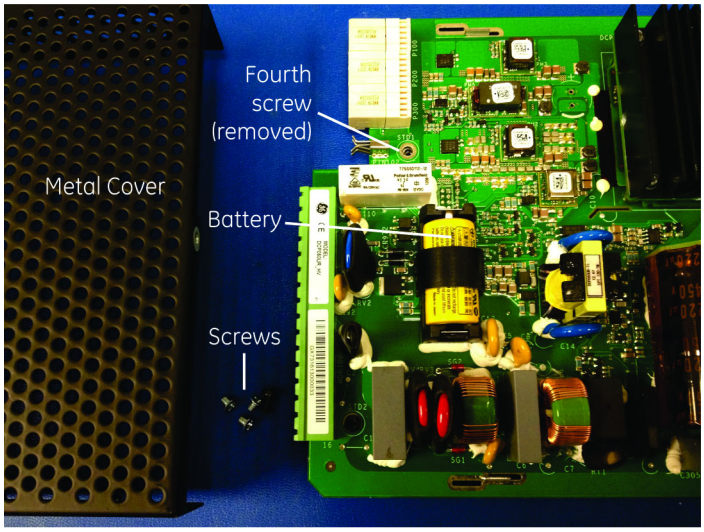

859717A1.cdr

22. Reinstall the battery holder and the metal cover, and reinsert the power supply module into the unit.
23. Power on the unit.
24. Dispose of the old battery as outlined in the next section.

EN Battery Disposal
This product contains a battery that cannot be disposed of as unsorted municipal waste in the European Union. See the product documentation for specific battery information. The battery is marked with this symbol, which may include lettering to indicate cadmium (Cd), lead (Pb), or mercury (Hg). For proper recycling return the battery to your supplier or to a designated collection point. For more information see: www.recyclethis.info.

CS Nakládání s bateriemi
Tento produkt obsahuje baterie, které nemohou být zneškodněny v Evropské unii jako netříděný komunální odpadu. Viz dokumentace k produktu pro informace pro konkrétní baterie. Baterie je označena tímto symbolem, který může zahrnovat i uvedena písmena, kadmium (Cd), olovo (Pb), nebo rtuť (Hg). Pro správnou recyklaci baterií vraťte svémudodavateli nebo na určeném sběrném místě. Pro více informací viz: www.recyclethis.info.

DA Batteri affald
Dette produkt indeholder et batteri som ikke kan bortskaffes sammen med almindeligt husholdningsaffald i Europa. Se produktinformation for specifikke informationer om batteriet. Batteriet er forsynet med indgraveret symboler for hvad batteriet indeholder: kadmium (Cd), bly (Pb) og kviksølv (Hg). Europæiske brugere af elektrisk udstyr skal aflevere kasserede produkter til genbrug eller til leverandøren. Yderligere oplysninger findes på webstedet www.recyclethis.info.

DE Entsorgung von Batterien
Dieses Produkt beinhaltet eine Batterie, die nicht als unsortierter städtischer Abfall in der europäischen Union entsorgt werden darf. Beachten Sie die spezifischen Batterie-informationen in der Produktdokumentation. Die Batterie ist mit diesem Symbol gekennzeichnet, welches auch Hinweise auf möglicherweise enthaltene Stoffe wie Kadmium (Cd), Blei (Pb) oder Quecksilber (Hektogramm) darstellt. Für die korrekte Wiederverwertung bringen Sie diese Batterie zu Ihrem lokalen Lieferanten zurück oder entsorgen Sie das Produkt an den gekennzeichneten Sammelstellen. Weitere Informationen hierzu finden Sie auf der folgenden Website: www.recyclethis.info.

EL Απόρριψη μπαταριών
Αυτό το προϊόν περιέχει μια μπαταρία που δεν πρέπει να απορρίπτεται σε δημόσια συστήματα απόρριψης στην Ευρωπαϊκή Κοινότητα. Δείτε την τεκμηρίωση του προϊόντος για συγκεκριμένες πληροφορίες που αφορούν τη μπαταρία. Η μπαταρία είναι φέρει σήμανση με αυτό το σύμβολο, το οποίο μπορεί να περιλαμβάνει γράμματα για να δηλώσουν το κάδμιο (Cd), τον μόλυβδο (Pb), ή τον υδράργυρο (Hg). Για την κατάλληλη ανακύκλωση επιστρέψτε την μπαταρία στον προμηθευτή σας ή σε καθορισμένο σημείο συλλογής. Για περισσότερες πληροφορίες δείτε: www.recyclethis.info.

ES Eliminacion de baterias
Este producto contiene una batería que no se pueda eliminar como basura normal sin clasificar en la Unión Europea. Examine la documentación del producto para la información específica de la batería. La batería se marca con este símbolo, que puede incluir siglas para indicar el cadmio (Cd), el plomo (Pb), o el mercurio (Hg). Para el reciclaje apropiado, devuelva este producto a su distribuidor ó deshágase de él en los puntos de reciclaje designados. Para mas información : wwwrecyclethis.info.

ET Patareide kõrvaldamine
Käesolev toode sisaldab patareisid, mida Euroopa Liidus ei tohi kõrvaldada sorteerimata olmejäätmetena. Andmeid patareide kohta vaadake toote dokumentatsioonist. Patareid on märgistatud käesoleva sümboliga, millel võib olla kaadmiumi (Cd), pliid (Pb) või elavhõbedat (Hg) tähistavad tähed. Nõuetekohaseks ringlusse võtmiseks tagastage patarei tarnijale või kindlaksmääratud vastuvõtupunkti. Lisainformatsiooni saab Internetist aadressil: www.recyclethis.info.

FI Paristoje ja akkujen hävittäminen
Tuote sisältää pariston, jota ei saa hävittää Euroopan Unionin alueella talousjätteen mukana. Tarkista tuoteselosteesta tuotteen tiedot. Paristo on merkitty tällä symbolilla ja saattaa sisältää cadmiumia (Cd), lyijyä (Pb) tai elohopeaa (Hg). Oikean kierrätystavan varmistamiseksi palauta tuote paikalliselle jälleenmyyjälle tai palauta se paristojen keräyspisteeseen. Lisätietoja sivuilla www.recyclethis.info.

FR Élimination des piles
Ce produit contient une batterie qui ne peuvent être éliminés comme déchets municipaux non triés dans l'Union européenne. Voir la documentation du produit au niveau des renseignements sur la pile. La batterie est marqué de ce symbole, qui comprennent les indications cadmium (Cd), plomb (Pb), ou mercure (Hg). Pour le recyclage, retourner la batterie à votre fournisseur ou à un point de collecte. Pour plus d'informations, voir: www.recyclethis.info.

HU Akkumulátor hulladék kezelése
Ezen termék akkumulátort tartalmaz, amely az Európai Unión belül csak a kijelölt módon és helyen dobható ki. A terméken illetve a mellékelt ismertetőn olvasható a kadmium (Cd), ólom (Pb) vagy higany (Hg) tartalomra utaló betűjelzés. A hulladék akkumulátor leadható a termék forgalmazójánál új akkumulátor vásárlásakor, vagy a kijelölt elektronikai hulladékudvarokban. További információ a www.recyclethis.info oldalon.

IT Smaltimento batterie
Questo prodotto contiene una batteria che non può essere smaltita nei comuni contenitori per lo smaltimento rifiuti, nell' Unione Europea. Controllate la documentazione del prodotto per le informazioni specifiche sulla batteria. La batteria è contrassegnata con questo simbolo e può includere alcuni caratteri ad indicare la presenza di cadmio (Cd), piombo (Pb) oppure mercurio (Hg). Per il corretto smaltimento, potete restituirli al vostro fornitore locale, oppure rivolgervi e consegnarli presso i centri di raccolta preposti. Per maggiori informazioni vedere: ww.recyclethis.info.

LT Baterijų šalinimas
Šios įrangos sudėtyje yra baterijų, kurias draudžiama šalinti Europos Sąjungos viešose nerūšiuotų atliekų šalinimo sistemose. Informaciją apie baterijas galite rasti įrangos techninėje dokumentacijoje. Baterijos žymimos šiuo simboliu, papildomai gali būti nurodoma kad baterijų sudėtyje yra kadmio (Cd), švino (Pb) ar gyvsidabrio (Hg). Eksploatavimui nebetinkamas baterijas pristatykite į tam skirtas surinkimo vietas arba grąžinkite jas tiesioginiam tiekėjui, kad jos būtų tinkamai utilizuotos. Daugiau informacijos rasite šioje interneto svetainėje: www.recyclethis.info.

LV Bateriju likvidēšana
Šis produkts satur bateriju vai akumulatoru, kuru nedrīkst izmest Eiropas Savienībā esošajās sadzīves atkritumu sistēmās. Sk. produkta dokumentācijā, kur ir norādīta konkrēta informācija par bateriju vai akumulatoru. Baterijas vai akumulatora marķējumā ir šis simbols, kas var ietvert burtus, kuri norāda kadmiju (Cd), svinu (Pb) vai dzīvsudrabu (Hg). Pēc ekspluatācijas laika beigām baterijas vai akumulatori jānodod piegādātājam vai specializētā bateriju savākšanas vietā. Sīkāku informāciju var iegūt vietnē: www.recyclethis.info.

NL Verwijderen van baterijen
Dit product bevat een batterij welke niet kan verwijdert worden via de gemeentelijke huisvuilscheiding in de Europese Gemeenschap. Gelieve de product documentatie te controleren voor specifieke batterij informatie. De batterijen met deze label kunnen volgende indictaies bevatten cadium (Cd), lood (Pb) of kwik (Hg). Voor correcte vorm van kringloop, geef je de producten terug aan jou locale leverancier of geef het af aan een gespecialiseerde verzamelpunt. Meer informatie vindt u op de volgende website: www.recyclethis.info.

NO Retur av batteri
Dette produkt inneholder et batteri som ikke kan kastes med usortert kommunalt søppel i den Europeiske Unionen. Se produktdokumentasjonen for spesifikk batteriinformasjon. Batteriet er merket med dette symbolet som kan inkludere symboler for å indikere at kadmium (Cd), bly (Pb), eller kvikksølv (Hg) forekommer. Returner batteriet til leverandøren din eller til et dedikert oppsamlingspunkt for korrekt gjenvinning. For mer informasjon se: www.recyclethis.info.

PL Pozbywanie się zużytych baterii
Ten produkt zawiera baterie, które w Unii Europejskiej mogą być usuwane tylko jako posegregowane odpady komunalne. Dokładne informacje dotyczące użytych baterii znajdują się w dokumentacji produktu. Baterie oznaczone tym symbolem mogą zawierać dodatkowe oznaczenia literowe wskazujące na zawartość kadmu (Cd), ołowiu (Pb) lub rtęci (Hg). Dla zapewnienia właściwej utylizacji, należy zwrócić baterie do dostawcy albo do wyznaczonego punktu zbiórki. Więcej informacji można znaleźć na stronie internetowej www.recyclethis.info.

PT Eliminação de Baterias
Este produto contêm uma bateria que não pode ser considerado lixo municipal na União Europeia. Consulte a documentação do produto para obter informação específica da bateria. A bateria é identificada por meio de este símbolo, que pode incluir a rotulação para indicar o cádmio (Cd), chumbo (Pb), ou o mercúrio (hg). Para uma reciclagem apropriada envie a bateria para o seu fornecedor ou para um ponto de recolha designado. Para mais informação veja: www.recyclethis.info.

RU Утилизация батарей
Согласно европейской директиве об отходах электрического и электронного оборудования, продукты, содержащие батареи, нельзя утилизировать как обычные отходы на территории ЕС. Более подробную информацию вы найдете в документации к продукту. На этом символе могут присутствовать буквы, которые означают, что батарея собержит кадмий (Cd), свинец (Pb) или ртуть (Hg). Для надлежащей утилизации по окончании срока эксплуатации пользователь должен возвратить батареи локальному поставщику или сдать в специальный пункт приема. Подробности можно найти на веб-сайте: www.recyclethis.info.

SK Zaobchádzanie s batériami
Tento produkt obsahuje batériu, s ktorou sa v Európskej únii nesmie nakladať ako s netriedeným komunálnym odpadom. Dokumentácia k produktu obsahuje špecifické informácie o batérii. Batéria je označená týmto symbolom, ktorý môže obsahovať písmená na označenie kadmia (Cd), olova (Pb), alebo ortuti (Hg). Na správnu recykláciu vráťte batériu vášmu lokálnemu dodávateľovi alebo na určené zberné miesto. Pre viac informácii pozrite: www.recyclethis.info.

SL Odlaganje baterij
Ta izdelek vsebuje baterijo, ki je v Evropski uniji ni dovoljeno odstranjevati kot nesortiran komunalni odpadek. Za posebne informacije o bateriji glejte dokumentacijo izdelka. Baterija je označena s tem simbolom, ki lahko vključuje napise, ki označujejo kadmij (Cd), svinec (Pb) ali živo srebro (Hg). Za ustrezno recikliranje baterijo vrnite dobavitelju ali jo odstranite na določenem zbirališču. Za več informacij obiščite spletno stran: www.recyclethis.info.

SV Kassering av batteri

Denna produkt innehåller ett batteri som inte får kastas i allmänna sophanteringssytem inom den europeiska unionen. Se produktdokumentationen för specifik batteriinformation. Batteriet är märkt med denna symbol, vilket kan innebära att det innehåller kadmium (Cd), bly (Pb) eller kvicksilver (Hg). För korrekt återvinning skall batteriet returneras till leverantören eller till en därför avsedd deponering. För mer information, se: www.recyclethis.info.

TR Pil Geri Dönüşümü

Bu ürün Avrupa Birliği genel atık sistemlerine atılmaması gereken pil içermektedir. Daha detaylı pil bilgisi için ürünün kataloğunu inceleyiniz. Bu sembolle işaretlenmiş piller Kadmiyum(Cd), Kurşun(Pb) ya da Civa(Hg) içerebilir. Doğru geri dönüşüm için ürünü yerel tedarikçinize geri veriniz ya da özel işaretlenmiş toplama noktlarına atınız. Daha fazla bilgi için: www.recyclethis.info.

Global Contacts

North America	905-294-6222
Latin America	+55 11 3614 1700
Europe, Middle East, Africa	+(34) 94 485 88 00
Asia	+86-21-2401-3208
India	+91 80 41314617

From GE Part Number 1604-0021-A1, GE Publication Number GEK-113574

11.3.1 UNINSTALL AND CLEAR FILES AND DATA

The unit can be decommissioned by turning off power to the unit and disconnecting the wires to it.

To clear files and settings in the UR:

1. On the UR front panel, navigate to **COMMANDS** ⇨⇩ **RELAY MAINTENANCE** ⇨⇩ **SERVICE COMMAND**, enter the value 20511, and press the **ENTER** key. The relay restarts and clears the UR.
2. Clear the flash memory using the **SETTINGS** ⇨ **PRODUCT SETUP** ⇨⇩ **CLEAR RELAY RECORDS** command.

To clear files and settings on the computer:

1. Uninstall the EnerVista UR Setup software.
2. Find and delete the following UR files:
   - .URS, .CID, and .ICD settings
   - .EVT event records
   - .CFG and .DAT COMTRADE

11.4.1 REPAIRS

The battery and modules inside the case can be replaced without return of the device to the factory. The firmware and software can be upgraded without return of the device to the factory.

Fuses in the power supply module are not field-replaceable.

For issues not solved by troubleshooting, the process to return the device to the factory for repair is as follows:

- Contact a GE Grid Solutions Technical Support Center. Contact information is found in the first chapter.
- Obtain a Return Materials Authorization (RMA) number from the Technical Support Center.
- Verify that the RMA and Commercial Invoice received have the correct information.
- Tightly pack the unit in a box with bubble wrap, foam material, or styrofoam inserts or packaging peanuts to cushion the item(s). You may also use double boxing whereby you place the box in a larger box that contains at least 5 cm of cushioning material.
- Ship the unit by courier or freight forwarder, along with the Commercial Invoice and RMA, to the factory.

  GE GRID SOLUTIONS
  650 MARKLAND STREET
  MARKHAM, ONTARIO
  CANADA L6C 0M1

  ATTN: SERVICE DEPT.

  RMA# : _____

  Customers are responsible for shipping costs to the factory, regardless of whether the unit is under warranty.
- Fax a copy of the shipping information to the GE Grid Solutions service department in Canada at +1 905 927 5098.

Use the detailed return procedure outlined at

https://www.gegridsolutions.com/multilin/support/ret_proc.htm

The current warranty and return information are outlined at

https://www.gegridsolutions.com/multilin/warranty.htm

11.5.1 STORAGE

Store the unit indoors in a cool, dry place. If possible, store in the original packaging. Follow the storage temperature range outlined in the Specifications.

NOTICE To avoid deterioration of electrolytic capacitors, power up units that are stored in a de-energized state once per year, for one hour continuously.

11.6.1 DISPOSAL

Other than the battery, there are no special requirements for disposal of the unit at the end its service life. For customers located in the European Union, dispose of the battery as outlined earlier. To prevent non-intended use of the unit, remove the modules as outlined earlier, dismantle the unit, and recycle the metal when possible. See the UR Family Recycling and Disposal Instructions (GET-20096).

A FlexAnalog parameter is an analog parameter.

FlexAnalog items are also viewable in a web browser. Enter the IP address of the UR, access the **Device Information Menu** option, then the **FlexAnalog Parameter Listing** option. Entries displayed online depend on order code.

Table A–1: FLEXANALOG DATA ITEMS (Sheet 1 of 28)

DECIMAL ADDRESS	FLEXANALOG NAME	UNITS	DESCRIPTION
5728	Stator Diff Iad	Amps	Stator differential phase A current (Iad)
5730	Stator Rest Iar	Amps	Stator restraint phase A current (Iar)
5732	Stator Diff Ibd	Amps	Stator differential phase B current (Ibd)
5734	Stator Rest Ibr	Amps	Stator restraint phase B current (Ibr)
5736	Stator Diff Icd	Amps	Stator differential phase C current (Icd)
5738	Stator Rest Icr	Amps	Stator restraint phase C current (Icr)
5740	Stator Diff CT Prim.	Volts	Stator differential CT primary
5744	Stator Gnd Vn 3rd	Volts	Stator ground Vn third harmonic voltage
5746	Stator Gnd Vn+V0 3rd	Volts	Stator ground Vn+V0 third harmonic voltage
5748	Stator Gnd V0 3rd	Volts	Stator ground V0 third harmonic voltage
5752	Sh Injection Voltage	Volts	Subharmonic injection voltage
5754	Sh Injection Current	Amps	Subharmonic injection current
5756	Stat Gnd Resistance	kOhms	Stator ground resistance
5759	SH Current Angle	Degrees	Subharmonic injection current angle
5760	Sns Dir Power 1	Watts	Sensitive directional power 1 actual value
5762	Sns Dir Power 2	Watts	Sensitive directional power 2 actual value
5792	RGF 1 Igd Mag	Amps	Restricted ground fault 1 differential ground current magnitude
5794	RGF 1 Igr Mag	Amps	Restricted ground fault 1 restricted ground current magnitude
5796	RGF 2 Igd Mag	Amps	Restricted ground fault 2 differential ground current magnitude
5798	RGF 2 Igr Mag	Amps	Restricted ground fault 2 restricted ground current magnitude
5800	RGF 3 Igd Mag	Amps	Restricted ground fault 3 differential ground current magnitude
5802	RGF 3 Igr Mag	Amps	Restricted ground fault 3 restricted ground current magnitude
5804	RGF 4 Igd Mag	Amps	Restricted ground fault 4 differential ground current magnitude
5806	RGF 4 Igr Mag	Amps	Restricted ground fault 4 restricted ground current magnitude
5808	RGF 5 Igd Mag	Amps	Restricted ground fault 5 differential ground current magnitude
5810	RGF 5 Igr Mag	Amps	Restricted ground fault 5 restricted ground current magnitude
5812	RGF 6 Igd Mag	Amps	Restricted ground fault 6 differential ground current magnitude
5814	RGF 6 Igr Mag	Amps	Restricted ground fault 6 restricted ground current magnitude
5856	Freq Rate 1 Value	Hz/s	Frequency rate of change 1 actual value
5860	Freq Rate 2 Value	Hz/s	Frequency rate of change 2 actual value
5864	Freq Rate 3 Value	Hz/s	Frequency rate of change 3 actual value
5868	Freq Rate 4 Value	Hz/s	Frequency rate of change 4 actual value
6144	SRC 1 Ia RMS	Amps	Source 1 phase A current RMS
6146	SRC 1 Ib RMS	Amps	Source 1 phase B current RMS
6148	SRC 1 Ic RMS	Amps	Source 1 phase C current RMS
6150	SRC 1 In RMS	Amps	Source 1 neutral current RMS
6152	SRC 1 Ia Mag	Amps	Source 1 phase A current magnitude
6154	SRC 1 Ia Angle	Degrees	Source 1 phase A current angle
6155	SRC 1 Ib Mag	Amps	Source 1 phase B current magnitude
6157	SRC 1 Ib Angle	Degrees	Source 1 phase B current angle

Table A–1: FLEXANALOG DATA ITEMS (Sheet 2 of 28)

DECIMAL ADDRESS	FLEXANALOG NAME	UNITS	DESCRIPTION
6158	SRC 1 Ic Mag	Amps	Source 1 phase C current magnitude
6160	SRC 1 Ic Angle	Degrees	Source 1 phase C current angle
6161	SRC 1 In Mag	Amps	Source 1 neutral current magnitude
6163	SRC 1 In Angle	Degrees	Source 1 neutral current angle
6164	SRC 1 Ig RMS	Amps	Source 1 ground current RMS
6166	SRC 1 Ig Mag	Amps	Source 1 ground current magnitude
6168	SRC 1 Ig Angle	Degrees	Source 1 ground current angle
6169	SRC 1 I_0 Mag	Amps	Source 1 zero-sequence current magnitude
6171	SRC 1 I_0 Angle	Degrees	Source 1 zero-sequence current angle
6172	SRC 1 I_1 Mag	Amps	Source 1 positive-sequence current magnitude
6174	SRC 1 I_1 Angle	Degrees	Source 1 positive-sequence current angle
6175	SRC 1 I_2 Mag	Amps	Source 1 negative-sequence current magnitude
6177	SRC 1 I_2 Angle	Degrees	Source 1 negative-sequence current angle
6178	SRC 1 Igd Mag	Amps	Source 1 differential ground current magnitude
6180	SRC 1 Igd Angle	Degrees	Source 1 differential ground current angle
6208	SRC 2 Ia RMS	Amps	Source 2 phase A current RMS
6210	SRC 2 Ib RMS	Amps	Source 2 phase B current RMS
6212	SRC 2 Ic RMS	Amps	Source 2 phase C current RMS
6214	SRC 2 In RMS	Amps	Source 2 neutral current RMS
6216	SRC 2 Ia Mag	Amps	Source 2 phase A current magnitude
6218	SRC 2 Ia Angle	Degrees	Source 2 phase A current angle
6219	SRC 2 Ib Mag	Amps	Source 2 phase B current magnitude
6221	SRC 2 Ib Angle	Degrees	Source 2 phase B current angle
6222	SRC 2 Ic Mag	Amps	Source 2 phase C current magnitude
6224	SRC 2 Ic Angle	Degrees	Source 2 phase C current angle
6225	SRC 2 In Mag	Amps	Source 2 neutral current magnitude
6227	SRC 2 In Angle	Degrees	Source 2 neutral current angle
6228	SRC 2 Ig RMS	Amps	Source 2 ground current RMS
6230	SRC 2 Ig Mag	Amps	Source 2 ground current magnitude
6232	SRC 2 Ig Angle	Degrees	Source 2 ground current angle
6233	SRC 2 I_0 Mag	Amps	Source 2 zero-sequence current magnitude
6235	SRC 2 I_0 Angle	Degrees	Source 2 zero-sequence current angle
6236	SRC 2 I_1 Mag	Amps	Source 2 positive-sequence current magnitude
6238	SRC 2 I_1 Angle	Degrees	Source 2 positive-sequence current angle
6239	SRC 2 I_2 Mag	Amps	Source 2 negative-sequence current magnitude
6241	SRC 2 I_2 Angle	Degrees	Source 2 negative-sequence current angle
6242	SRC 2 Igd Mag	Amps	Source 2 differential ground current magnitude
6244	SRC 2 Igd Angle	Degrees	Source 2 differential ground current angle
6272	SRC 3 Ia RMS	Amps	Source 3 phase A current RMS
6274	SRC 3 Ib RMS	Amps	Source 3 phase B current RMS
6276	SRC 3 Ic RMS	Amps	Source 3 phase C current RMS
6278	SRC 3 In RMS	Amps	Source 3 neutral current RMS
6280	SRC 3 Ia Mag	Amps	Source 3 phase A current magnitude
6282	SRC 3 Ia Angle	Degrees	Source 3 phase A current angle
6283	SRC 3 Ib Mag	Amps	Source 3 phase B current magnitude
6285	SRC 3 Ib Angle	Degrees	Source 3 phase B current angle
6286	SRC 3 Ic Mag	Amps	Source 3 phase C current magnitude

Table A–1: FLEXANALOG DATA ITEMS (Sheet 3 of 28)

DECIMAL ADDRESS	FLEXANALOG NAME	UNITS	DESCRIPTION
6288	SRC 3 Ic Angle	Degrees	Source 3 phase C current angle
6289	SRC 3 In Mag	Amps	Source 3 neutral current magnitude
6291	SRC 3 In Angle	Degrees	Source 3 neutral current angle
6292	SRC 3 Ig RMS	Amps	Source 3 ground current RMS
6294	SRC 3 Ig Mag	Amps	Source 3 ground current magnitude
6296	SRC 3 Ig Angle	Degrees	Source 3 ground current angle
6297	SRC 3 I_0 Mag	Amps	Source 3 zero-sequence current magnitude
6299	SRC 3 I_0 Angle	Degrees	Source 3 zero-sequence current angle
6300	SRC 3 I_1 Mag	Amps	Source 3 positive-sequence current magnitude
6302	SRC 3 I_1 Angle	Degrees	Source 3 positive-sequence current angle
6303	SRC 3 I_2 Mag	Amps	Source 3 negative-sequence current magnitude
6305	SRC 3 I_2 Angle	Degrees	Source 3 negative-sequence current angle
6306	SRC 3 Igd Mag	Amps	Source 3 differential ground current magnitude
6308	SRC 3 Igd Angle	Degrees	Source 3 differential ground current angle
6336	SRC 4 Ia RMS	Amps	Source 4 phase A current RMS
6338	SRC 4 Ib RMS	Amps	Source 4 phase B current RMS
6340	SRC 4 Ic RMS	Amps	Source 4 phase C current RMS
6342	SRC 4 In RMS	Amps	Source 4 neutral current RMS
6344	SRC 4 Ia Mag	Amps	Source 4 phase A current magnitude
6346	SRC 4 Ia Angle	Degrees	Source 4 phase A current angle
6347	SRC 4 Ib Mag	Amps	Source 4 phase B current magnitude
6349	SRC 4 Ib Angle	Degrees	Source 4 phase B current angle
6350	SRC 4 Ic Mag	Amps	Source 4 phase C current magnitude
6352	SRC 4 Ic Angle	Degrees	Source 4 phase C current angle
6353	SRC 4 In Mag	Amps	Source 4 neutral current magnitude
6355	SRC 4 In Angle	Degrees	Source 4 neutral current angle
6356	SRC 4 Ig RMS	Amps	Source 4 ground current RMS
6358	SRC 4 Ig Mag	Amps	Source 4 ground current magnitude
6360	SRC 4 Ig Angle	Degrees	Source 4 ground current angle
6361	SRC 4 I_0 Mag	Amps	Source 4 zero-sequence current magnitude
6363	SRC 4 I_0 Angle	Degrees	Source 4 zero-sequence current angle
6364	SRC 4 I_1 Mag	Amps	Source 4 positive-sequence current magnitude
6366	SRC 4 I_1 Angle	Degrees	Source 4 positive-sequence current angle
6367	SRC 4 I_2 Mag	Amps	Source 4 negative-sequence current magnitude
6369	SRC 4 I_2 Angle	Degrees	Source 4 negative-sequence current angle
6370	SRC 4 Igd Mag	Amps	Source 4 differential ground current magnitude
6372	SRC 4 Igd Angle	Degrees	Source 4 differential ground current angle
6656	SRC 1 Vag RMS	Volts	Source 1 phase AG voltage RMS
6658	SRC 1 Vbg RMS	Volts	Source 1 phase BG voltage RMS
6660	SRC 1 Vcg RMS	Volts	Source 1 phase CG voltage RMS
6662	SRC 1 Vag Mag	Volts	Source 1 phase AG voltage magnitude
6664	SRC 1 Vag Angle	Degrees	Source 1 phase AG voltage angle
6665	SRC 1 Vbg Mag	Volts	Source 1 phase BG voltage magnitude
6667	SRC 1 Vbg Angle	Degrees	Source 1 phase BG voltage angle
6668	SRC 1 Vcg Mag	Volts	Source 1 phase CG voltage magnitude
6670	SRC 1 Vcg Angle	Degrees	Source 1 phase CG voltage angle
6671	SRC 1 Vab RMS	Volts	Source 1 phase AB voltage RMS

Table A–1: FLEXANALOG DATA ITEMS (Sheet 4 of 28)

DECIMAL ADDRESS	FLEXANALOG NAME	UNITS	DESCRIPTION
6673	SRC 1 Vbc RMS	Volts	Source 1 phase BC voltage RMS
6675	SRC 1 Vca RMS	Volts	Source 1 phase CA voltage RMS
6677	SRC 1 Vab Mag	Volts	Source 1 phase AB voltage magnitude
6679	SRC 1 Vab Angle	Degrees	Source 1 phase AB voltage angle
6680	SRC 1 Vbc Mag	Volts	Source 1 phase BC voltage magnitude
6682	SRC 1 Vbc Angle	Degrees	Source 1 phase BC voltage angle
6683	SRC 1 Vca Mag	Volts	Source 1 phase CA voltage magnitude
6685	SRC 1 Vca Angle	Degrees	Source 1 phase CA voltage angle
6686	SRC 1 Vx RMS	Volts	Source 1 auxiliary voltage RMS
6688	SRC 1 Vx Mag	Volts	Source 1 auxiliary voltage magnitude
6690	SRC 1 Vx Angle	Degrees	Source 1 auxiliary voltage angle
6691	SRC 1 V_0 Mag	Volts	Source 1 zero-sequence voltage magnitude
6693	SRC 1 V_0 Angle	Degrees	Source 1 zero-sequence voltage angle
6694	SRC 1 V_1 Mag	Volts	Source 1 positive-sequence voltage magnitude
6696	SRC 1 V_1 Angle	Degrees	Source 1 positive-sequence voltage angle
6697	SRC 1 V_2 Mag	Volts	Source 1 negative-sequence voltage magnitude
6699	SRC 1 V_2 Angle	Degrees	Source 1 negative-sequence voltage angle
6720	SRC 2 Vag RMS	Volts	Source 2 phase AG voltage RMS
6722	SRC 2 Vbg RMS	Volts	Source 2 phase BG voltage RMS
6724	SRC 2 Vcg RMS	Volts	Source 2 phase CG voltage RMS
6726	SRC 2 Vag Mag	Volts	Source 2 phase AG voltage magnitude
6728	SRC 2 Vag Angle	Degrees	Source 2 phase AG voltage angle
6729	SRC 2 Vbg Mag	Volts	Source 2 phase BG voltage magnitude
6731	SRC 2 Vbg Angle	Degrees	Source 2 phase BG voltage angle
6732	SRC 2 Vcg Mag	Volts	Source 2 phase CG voltage magnitude
6734	SRC 2 Vcg Angle	Degrees	Source 2 phase CG voltage angle
6735	SRC 2 Vab RMS	Volts	Source 2 phase AB voltage RMS
6737	SRC 2 Vbc RMS	Volts	Source 2 phase BC voltage RMS
6739	SRC 2 Vca RMS	Volts	Source 2 phase CA voltage RMS
6741	SRC 2 Vab Mag	Volts	Source 2 phase AB voltage magnitude
6743	SRC 2 Vab Angle	Degrees	Source 2 phase AB voltage angle
6744	SRC 2 Vbc Mag	Volts	Source 2 phase BC voltage magnitude
6746	SRC 2 Vbc Angle	Degrees	Source 2 phase BC voltage angle
6747	SRC 2 Vca Mag	Volts	Source 2 phase CA voltage magnitude
6749	SRC 2 Vca Angle	Degrees	Source 2 phase CA voltage angle
6750	SRC 2 Vx RMS	Volts	Source 2 auxiliary voltage RMS
6752	SRC 2 Vx Mag	Volts	Source 2 auxiliary voltage magnitude
6754	SRC 2 Vx Angle	Degrees	Source 2 auxiliary voltage angle
6755	SRC 2 V_0 Mag	Volts	Source 2 zero-sequence voltage magnitude
6757	SRC 2 V_0 Angle	Degrees	Source 2 zero-sequence voltage angle
6758	SRC 2 V_1 Mag	Volts	Source 2 positive-sequence voltage magnitude
6760	SRC 2 V_1 Angle	Degrees	Source 2 positive-sequence voltage angle
6761	SRC 2 V_2 Mag	Volts	Source 2 negative-sequence voltage magnitude
6763	SRC 2 V_2 Angle	Degrees	Source 2 negative-sequence voltage angle
6784	SRC 3 Vag RMS	Volts	Source 3 phase AG voltage RMS
6786	SRC 3 Vbg RMS	Volts	Source 3 phase BG voltage RMS
6788	SRC 3 Vcg RMS	Volts	Source 3 phase CG voltage RMS

Table A–1: FLEXANALOG DATA ITEMS (Sheet 5 of 28)

DECIMAL ADDRESS	FLEXANALOG NAME	UNITS	DESCRIPTION
6790	SRC 3 Vag Mag	Volts	Source 3 phase AG voltage magnitude
6792	SRC 3 Vag Angle	Degrees	Source 3 phase AG voltage angle
6793	SRC 3 Vbg Mag	Volts	Source 3 phase BG voltage magnitude
6795	SRC 3 Vbg Angle	Degrees	Source 3 phase BG voltage angle
6796	SRC 3 Vcg Mag	Volts	Source 3 phase CG voltage magnitude
6798	SRC 3 Vcg Angle	Degrees	Source 3 phase CG voltage angle
6799	SRC 3 Vab RMS	Volts	Source 3 phase AB voltage RMS
6801	SRC 3 Vbc RMS	Volts	Source 3 phase BC voltage RMS
6803	SRC 3 Vca RMS	Volts	Source 3 phase CA voltage RMS
6805	SRC 3 Vab Mag	Volts	Source 3 phase AB voltage magnitude
6807	SRC 3 Vab Angle	Degrees	Source 3 phase AB voltage angle
6808	SRC 3 Vbc Mag	Volts	Source 3 phase BC voltage magnitude
6810	SRC 3 Vbc Angle	Degrees	Source 3 phase BC voltage angle
6811	SRC 3 Vca Mag	Volts	Source 3 phase CA voltage magnitude
6813	SRC 3 Vca Angle	Degrees	Source 3 phase CA voltage angle
6814	SRC 3 Vx RMS	Volts	Source 3 auxiliary voltage RMS
6816	SRC 3 Vx Mag	Volts	Source 3 auxiliary voltage magnitude
6818	SRC 3 Vx Angle	Degrees	Source 3 auxiliary voltage angle
6819	SRC 3 V_0 Mag	Volts	Source 3 zero-sequence voltage magnitude
6821	SRC 3 V_0 Angle	Degrees	Source 3 zero-sequence voltage angle
6822	SRC 3 V_1 Mag	Volts	Source 3 positive-sequence voltage magnitude
6824	SRC 3 V_1 Angle	Degrees	Source 3 positive-sequence voltage angle
6825	SRC 3 V_2 Mag	Volts	Source 3 negative-sequence voltage magnitude
6827	SRC 3 V_2 Angle	Degrees	Source 3 negative-sequence voltage angle
6848	SRC 4 Vag RMS	Volts	Source 4 phase AG voltage RMS
6850	SRC 4 Vbg RMS	Volts	Source 4 phase BG voltage RMS
6852	SRC 4 Vcg RMS	Volts	Source 4 phase CG voltage RMS
6854	SRC 4 Vag Mag	Volts	Source 4 phase AG voltage magnitude
6856	SRC 4 Vag Angle	Degrees	Source 4 phase AG voltage angle
6857	SRC 4 Vbg Mag	Volts	Source 4 phase BG voltage magnitude
6859	SRC 4 Vbg Angle	Degrees	Source 4 phase BG voltage angle
6860	SRC 4 Vcg Mag	Volts	Source 4 phase CG voltage magnitude
6862	SRC 4 Vcg Angle	Degrees	Source 4 phase CG voltage angle
6863	SRC 4 Vab RMS	Volts	Source 4 phase AB voltage RMS
6865	SRC 4 Vbc RMS	Volts	Source 4 phase BC voltage RMS
6867	SRC 4 Vca RMS	Volts	Source 4 phase CA voltage RMS
6869	SRC 4 Vab Mag	Volts	Source 4 phase AB voltage magnitude
6871	SRC 4 Vab Angle	Degrees	Source 4 phase AB voltage angle
6872	SRC 4 Vbc Mag	Volts	Source 4 phase BC voltage magnitude
6874	SRC 4 Vbc Angle	Degrees	Source 4 phase BC voltage angle
6875	SRC 4 Vca Mag	Volts	Source 4 phase CA voltage magnitude
6877	SRC 4 Vca Angle	Degrees	Source 4 phase CA voltage angle
6878	SRC 4 Vx RMS	Volts	Source 4 auxiliary voltage RMS
6880	SRC 4 Vx Mag	Volts	Source 4 auxiliary voltage magnitude
6882	SRC 4 Vx Angle	Degrees	Source 4 auxiliary voltage angle
6883	SRC 4 V_0 Mag	Volts	Source 4 zero-sequence voltage magnitude
6885	SRC 4 V_0 Angle	Degrees	Source 4 zero-sequence voltage angle

Table A–1: FLEXANALOG DATA ITEMS (Sheet 6 of 28)

DECIMAL ADDRESS	FLEXANALOG NAME	UNITS	DESCRIPTION
6886	SRC 4 V_1 Mag	Volts	Source 4 positive-sequence voltage magnitude
6888	SRC 4 V_1 Angle	Degrees	Source 4 positive-sequence voltage angle
6889	SRC 4 V_2 Mag	Volts	Source 4 negative-sequence voltage magnitude
6891	SRC 4 V_2 Angle	Degrees	Source 4 negative-sequence voltage angle
7168	SRC 1 P	Watts	Source 1 three-phase real power
7170	SRC 1 Pa	Watts	Source 1 phase A real power
7172	SRC 1 Pb	Watts	Source 1 phase B real power
7174	SRC 1 Pc	Watts	Source 1 phase C real power
7176	SRC 1 Q	Vars	Source 1 three-phase reactive power
7178	SRC 1 Qa	Vars	Source 1 phase A reactive power
7180	SRC 1 Qb	Vars	Source 1 phase B reactive power
7182	SRC 1 Qc	Vars	Source 1 phase C reactive power
7184	SRC 1 S	VA	Source 1 three-phase apparent power
7186	SRC 1 Sa	VA	Source 1 phase A apparent power
7188	SRC 1 Sb	VA	Source 1 phase B apparent power
7190	SRC 1 Sc	VA	Source 1 phase C apparent power
7192	SRC 1 PF	---	Source 1 three-phase power factor
7193	SRC 1 Phase A PF	---	Source 1 phase A power factor
7194	SRC 1 Phase B PF	---	Source 1 phase B power factor
7195	SRC 1 Phase C PF	---	Source 1 phase C power factor
7200	SRC 2 P	Watts	Source 2 three-phase real power
7202	SRC 2 Pa	Watts	Source 2 phase A real power
7204	SRC 2 Pb	Watts	Source 2 phase B real power
7206	SRC 2 Pc	Watts	Source 2 phase C real power
7208	SRC 2 Q	Vars	Source 2 three-phase reactive power
7210	SRC 2 Qa	Vars	Source 2 phase A reactive power
7212	SRC 2 Qb	Vars	Source 2 phase B reactive power
7214	SRC 2 Qc	Vars	Source 2 phase C reactive power
7216	SRC 2 S	VA	Source 2 three-phase apparent power
7218	SRC 2 Sa	VA	Source 2 phase A apparent power
7220	SRC 2 Sb	VA	Source 2 phase B apparent power
7222	SRC 2 Sc	VA	Source 2 phase C apparent power
7224	SRC 2 PF	---	Source 2 three-phase power factor
7225	SRC 2 Phase A PF	---	Source 2 phase A power factor
7226	SRC 2 Phase B PF	---	Source 2 phase B power factor
7227	SRC 2 Phase C PF	---	Source 2 phase C power factor
7232	SRC 3 P	Watts	Source 3 three-phase real power
7234	SRC 3 Pa	Watts	Source 3 phase A real power
7236	SRC 3 Pb	Watts	Source 3 phase B real power
7238	SRC 3 Pc	Watts	Source 3 phase C real power
7240	SRC 3 Q	Vars	Source 3 three-phase reactive power
7242	SRC 3 Qa	Vars	Source 3 phase A reactive power
7244	SRC 3 Qb	Vars	Source 3 phase B reactive power
7246	SRC 3 Qc	Vars	Source 3 phase C reactive power
7248	SRC 3 S	VA	Source 3 three-phase apparent power
7250	SRC 3 Sa	VA	Source 3 phase A apparent power
7252	SRC 3 Sb	VA	Source 3 phase B apparent power

Table A–1: FLEXANALOG DATA ITEMS (Sheet 7 of 28)

DECIMAL ADDRESS	FLEXANALOG NAME	UNITS	DESCRIPTION
7254	SRC 3 Sc	VA	Source 3 phase C apparent power
7256	SRC 3 PF	---	Source 3 three-phase power factor
7257	SRC 3 Phase A PF	---	Source 3 phase A power factor
7258	SRC 3 Phase B PF	---	Source 3 phase B power factor
7259	SRC 3 Phase C PF	---	Source 3 phase C power factor
7264	SRC 4 P	Watts	Source 4 three-phase real power
7266	SRC 4 Pa	Watts	Source 4 phase A real power
7268	SRC 4 Pb	Watts	Source 4 phase B real power
7270	SRC 4 Pc	Watts	Source 4 phase C real power
7272	SRC 4 Q	Vars	Source 4 three-phase reactive power
7274	SRC 4 Qa	Vars	Source 4 phase A reactive power
7276	SRC 4 Qb	Vars	Source 4 phase B reactive power
7278	SRC 4 Qc	Vars	Source 4 phase C reactive power
7280	SRC 4 S	VA	Source 4 three-phase apparent power
7282	SRC 4 Sa	VA	Source 4 phase A apparent power
7284	SRC 4 Sb	VA	Source 4 phase B apparent power
7286	SRC 4 Sc	VA	Source 4 phase C apparent power
7288	SRC 4 PF	---	Source 4 three-phase power factor
7289	SRC 4 Phase A PF	---	Source 4 phase A power factor
7290	SRC 4 Phase B PF	---	Source 4 phase B power factor
7291	SRC 4 Phase C PF	---	Source 4 phase C power factor
7424	SRC 1 Pos Watthour	kWh	Source 1 positive Watthour
7426	SRC 1 Neg Watthour	Wh	Source 1 negative Watthour
7428	SRC 1 Pos varh	varh	Source 1 positive varhour
7430	SRC 1 Neg varh	varh	Source 1 negative varhour
7440	SRC 2 Pos Watthour	kWh	Source 2 positive Watthour
7442	SRC 2 Neg Watthour	Wh	Source 2 negative Watthour
7444	SRC 2 Pos varh	varh	Source 2 positive varhour
7446	SRC 2 Neg varh	varh	Source 2 negative varhour
7456	SRC 3 Pos Watthour	kWh	Source 3 positive Watthour
7458	SRC 3 Neg Watthour	kWh	Source 3 negative Watthour
7460	SRC 3 Pos varh	varh	Source 3 positive varhour
7462	SRC 3 Neg varh	varh	Source 3 negative varhour
7472	SRC 4 Pos Watthour	Wh	Source 4 positive Watthour
7474	SRC 4 Neg Watthour	Wh	Source 4 negative Watthour
7476	SRC 4 Pos varh	varh	Source 4 positive varhour
7478	SRC 4 Neg varh	varh	Source 4 negative varhour
7552	SRC 1 Frequency	Hz	Source 1 frequency
7554	SRC 2 Frequency	Hz	Source 2 frequency
7556	SRC 3 Frequency	Hz	Source 3 frequency
7558	SRC 4 Frequency	Hz	Source 4 frequency
8064	SRC 1 Va THD	%	Source 1 phase A voltage total harmonic distortion (THD)
8065	SRC 1 Va Harm[2]	%	Source 1 phase A voltage second harmonic
8066	SRC 1 Va Harm[3]	%	Source 1 phase A voltage third harmonic
8067	SRC 1 Va Harm[4]	%	Source 1 phase A voltage fourth harmonic
8068	SRC 1 Va Harm[5]	%	Source 1 phase A voltage fifth harmonic
8069	SRC 1 Va Harm[6]	%	Source 1 phase A voltage sixth harmonic

A

Table A–1: FLEXANALOG DATA ITEMS (Sheet 8 of 28)

DECIMAL ADDRESS	FLEXANALOG NAME	UNITS	DESCRIPTION
8070	SRC 1 Va Harm[7]	%	Source 1 phase A voltage seventh harmonic
8071	SRC 1 Va Harm[8]	%	Source 1 phase A voltage eighth harmonic
8072	SRC 1 Va Harm[9]	%	Source 1 phase A voltage ninth harmonic
8073	SRC 1 Va Harm[10]	%	Source 1 phase A voltage tenth harmonic
8074	SRC 1 Va Harm[11]	%	Source 1 phase A voltage eleventh harmonic
8075	SRC 1 Va Harm[12]	%	Source 1 phase A voltage twelfth harmonic
8076	SRC 1 Va Harm[13]	%	Source 1 phase A voltage thirteenth harmonic
8077	SRC 1 Va Harm[14]	%	Source 1 phase A voltage fourteenth harmonic
8078	SRC 1 Va Harm[15]	%	Source 1 phase A voltage fifteenth harmonic
8079	SRC 1 Va Harm[16]	%	Source 1 phase A voltage sixteenth harmonic
8080	SRC 1 Va Harm[17]	%	Source 1 phase A voltage seventeenth harmonic
8081	SRC 1 Va Harm[18]	%	Source 1 phase A voltage eighteenth harmonic
8082	SRC 1 Va Harm[19]	%	Source 1 phase A voltage nineteenth harmonic
8083	SRC 1 Va Harm[20]	%	Source 1 phase A voltage twentieth harmonic
8084	SRC 1 Va Harm[21]	%	Source 1 phase A voltage twenty-first harmonic
8085	SRC 1 Va Harm[22]	%	Source 1 phase A voltage twenty-second harmonic
8086	SRC 1 Va Harm[23]	%	Source 1 phase A voltage twenty-third harmonic
8087	SRC 1 Va Harm[24]	%	Source 1 phase A voltage twenty-fourth harmonic
8088	SRC 1 Va Harm[25]	%	Source 1 phase A voltage twenty-fifth harmonic
8089	SRC 1 Vb THD	%	Source 1 phase B voltage total harmonic distortion (THD)
8090	SRC 1 Vb Harm[2]	%	Source 1 phase B voltage second harmonic
8091	SRC 1 Vb Harm[3]	%	Source 1 phase B voltage third harmonic
8092	SRC 1 Vb Harm[4]	%	Source 1 phase B voltage fourth harmonic
8093	SRC 1 Vb Harm[5]	%	Source 1 phase B voltage fifth harmonic
8094	SRC 1 Vb Harm[6]	%	Source 1 phase B voltage sixth harmonic
8095	SRC 1 Vb Harm[7]	%	Source 1 phase B voltage seventh harmonic
8096	SRC 1 Vb Harm[8]	%	Source 1 phase B voltage eighth harmonic
8097	SRC 1 Vb Harm[9]	%	Source 1 phase B voltage ninth harmonic
8098	SRC 1 Vb Harm[10]	%	Source 1 phase B voltage tenth harmonic
8099	SRC 1 Vb Harm[11]	%	Source 1 phase B voltage eleventh harmonic
8100	SRC 1 Vb Harm[12]	%	Source 1 phase B voltage twelfth harmonic
8101	SRC 1 Vb Harm[13]	%	Source 1 phase B voltage thirteenth harmonic
8102	SRC 1 Vb Harm[14]	%	Source 1 phase B voltage fourteenth harmonic
8103	SRC 1 Vb Harm[15]	%	Source 1 phase B voltage fifteenth harmonic
8104	SRC 1 Vb Harm[16]	%	Source 1 phase B voltage sixteenth harmonic
8105	SRC 1 Vb Harm[17]	%	Source 1 phase B voltage seventeenth harmonic
8106	SRC 1 Vb Harm[18]	%	Source 1 phase B voltage eighteenth harmonic
8107	SRC 1 Vb Harm[19]	%	Source 1 phase B voltage nineteenth harmonic
8108	SRC 1 Vb Harm[20]	%	Source 1 phase B voltage twentieth harmonic
8109	SRC 1 Vb Harm[21]	%	Source 1 phase B voltage twenty-first harmonic
8110	SRC 1 Vb Harm[22]	%	Source 1 phase B voltage twenty-second harmonic
8111	SRC 1 Vb Harm[23]	%	Source 1 phase B voltage twenty-third harmonic
8112	SRC 1 Vb Harm[24]	%	Source 1 phase B voltage twenty-fourth harmonic
8113	SRC 1 Vb Harm[25]	%	Source 1 phase B voltage twenty-fifth harmonic
8114	SRC 1 Vc THD	%	Source 1 phase C voltage total harmonic distortion (THD)
8115	SRC 1 Vc Harm[2]	%	Source 1 phase C voltage second harmonic
8116	SRC 1 Vc Harm[3]	%	Source 1 phase C voltage third harmonic

Table A–1: FLEXANALOG DATA ITEMS (Sheet 9 of 28)

DECIMAL ADDRESS	FLEXANALOG NAME	UNITS	DESCRIPTION
8117	SRC 1 Vc Harm[4]	%	Source 1 phase C voltage fourth harmonic
8118	SRC 1 Vc Harm[5]	%	Source 1 phase C voltage fifth harmonic
8119	SRC 1 Vc Harm[6]	%	Source 1 phase C voltage sixth harmonic
8120	SRC 1 Vc Harm[7]	%	Source 1 phase C voltage seventh harmonic
8121	SRC 1 Vc Harm[8]	%	Source 1 phase C voltage eighth harmonic
8122	SRC 1 Vc Harm[9]	%	Source 1 phase C voltage ninth harmonic
8123	SRC 1 Vc Harm[10]	%	Source 1 phase C voltage tenth harmonic
8124	SRC 1 Vc Harm[11]	%	Source 1 phase C voltage eleventh harmonic
8125	SRC 1 Vc Harm[12]	%	Source 1 phase C voltage twelfth harmonic
8126	SRC 1 Vc Harm[13]	%	Source 1 phase C voltage thirteenth harmonic
8127	SRC 1 Vc Harm[14]	%	Source 1 phase C voltage fourteenth harmonic
8128	SRC 1 Vc Harm[15]	%	Source 1 phase C voltage fifteenth harmonic
8129	SRC 1 Vc Harm[16]	%	Source 1 phase C voltage sixteenth harmonic
8130	SRC 1 Vc Harm[17]	%	Source 1 phase C voltage seventeenth harmonic
8131	SRC 1 Vc Harm[18]	%	Source 1 phase C voltage eighteenth harmonic
8132	SRC 1 Vc Harm[19]	%	Source 1 phase C voltage nineteenth harmonic
8133	SRC 1 Vc Harm[20]	%	Source 1 phase C voltage twentieth harmonic
8134	SRC 1 Vc Harm[21]	%	Source 1 phase C voltage twenty-first harmonic
8135	SRC 1 Vc Harm[22]	%	Source 1 phase C voltage twenty-second harmonic
8136	SRC 1 Vc Harm[23]	%	Source 1 phase C voltage twenty-third harmonic
8137	SRC 1 Vc Harm[24]	%	Source 1 phase C voltage twenty-fourth harmonic
8138	SRC 1 Vc Harm[25]	%	Source 1 phase C voltage twenty-fifth harmonic
8139	SRC 2 Va THD	%	Source 2 phase A voltage total harmonic distortion (THD)
8140	SRC 2 Va Harm[2]	%	Source 2 phase A voltage second harmonic
8141	SRC 2 Va Harm[3]	%	Source 2 phase A voltage third harmonic
8142	SRC 2 Va Harm[4]	%	Source 2 phase A voltage fourth harmonic
8143	SRC 2 Va Harm[5]	%	Source 2 phase A voltage fifth harmonic
8144	SRC 2 Va Harm[6]	%	Source 2 phase A voltage sixth harmonic
8145	SRC 2 Va Harm[7]	%	Source 2 phase A voltage seventh harmonic
8146	SRC 2 Va Harm[8]	%	Source 2 phase A voltage eighth harmonic
8147	SRC 2 Va Harm[9]	%	Source 2 phase A voltage ninth harmonic
8148	SRC 2 Va Harm[10]	%	Source 2 phase A voltage tenth harmonic
8149	SRC 2 Va Harm[11]	%	Source 2 phase A voltage eleventh harmonic
8150	SRC 2 Va Harm[12]	%	Source 2 phase A voltage twelfth harmonic
8151	SRC 2 Va Harm[13]	%	Source 2 phase A voltage thirteenth harmonic
8152	SRC 2 Va Harm[14]	%	Source 2 phase A voltage fourteenth harmonic
8153	SRC 2 Va Harm[15]	%	Source 2 phase A voltage fifteenth harmonic
8154	SRC 2 Va Harm[16]	%	Source 2 phase A voltage sixteenth harmonic
8155	SRC 2 Va Harm[17]	%	Source 2 phase A voltage seventeenth harmonic
8156	SRC 2 Va Harm[18]	%	Source 2 phase A voltage eighteenth harmonic
8157	SRC 2 Va Harm[19]	%	Source 2 phase A voltage nineteenth harmonic
8158	SRC 2 Va Harm[20]	%	Source 2 phase A voltage twentieth harmonic
8159	SRC 2 Va Harm[21]	%	Source 2 phase A voltage twenty-first harmonic
8160	SRC 2 Va Harm[22]	%	Source 2 phase A voltage twenty-second harmonic
8161	SRC 2 Va Harm[23]	%	Source 2 phase A voltage twenty-third harmonic
8162	SRC 2 Va Harm[24]	%	Source 2 phase A voltage twenty-fourth harmonic
8163	SRC 2 Va Harm[25]	%	Source 2 phase A voltage twenty-fifth harmonic

A

Table A–1: FLEXANALOG DATA ITEMS (Sheet 10 of 28)

DECIMAL ADDRESS	FLEXANALOG NAME	UNITS	DESCRIPTION
8164	SRC 2 Vb THD	%	Source 2 phase B voltage total harmonic distortion (THD)
8165	SRC 2 Vb Harm2]	%	Source 2 phase B voltage second harmonic
8166	SRC 2 Vb Harm[3]	%	Source 2 phase B voltage third harmonic
8167	SRC 2 Vb Harm[4]	%	Source 2 phase B voltage fourth harmonic
8168	SRC 2 Vb Harm[5]	%	Source 2 phase B voltage fifth harmonic
8169	SRC 2 Vb Harm[6]	%	Source 2 phase B voltage sixth harmonic
8170	SRC 2 Vb Harm[7]	%	Source 2 phase B voltage seventh harmonic
8171	SRC 2 Vb Harm[8]	%	Source 2 phase B voltage eighth harmonic
8172	SRC 2 Vb Harm[9]	%	Source 2 phase B voltage ninth harmonic
8173	SRC 2 Vb Harm[10]	%	Source 2 phase B voltage tenth harmonic
8174	SRC 2 Vb Harm[11]	%	Source 2 phase B voltage eleventh harmonic
8175	SRC 2 Vb Harm[12]	%	Source 2 phase B voltage twelfth harmonic
8176	SRC 2 Vb Harm[13]	%	Source 2 phase B voltage thirteenth harmonic
8177	SRC 2 Vb Harm[14]	%	Source 2 phase B voltage fourteenth harmonic
8178	SRC 2 Vb Harm[15]	%	Source 2 phase B voltage fifteenth harmonic
8179	SRC 2 Vb Harm[16]	%	Source 2 phase B voltage sixteenth harmonic
8180	SRC 2 Vb Harm[17]	%	Source 2 phase B voltage seventeenth harmonic
8181	SRC 2 Vb Harm[18]	%	Source 2 phase B voltage eighteenth harmonic
8182	SRC 2 Vb Harm[19]	%	Source 2 phase B voltage nineteenth harmonic
8183	SRC 2 Vb Harm[20]	%	Source 2 phase B voltage twentieth harmonic
8184	SRC 2 Vb Harm[21]	%	Source 2 phase B voltage twenty-first harmonic
8185	SRC 2 Vb Harm[22]	%	Source 2 phase B voltage twenty-second harmonic
8186	SRC 2 Vb Harm[23]	%	Source 2 phase B voltage twenty-third harmonic
8187	SRC 2 Vb Harm[24]	%	Source 2 phase B voltage twenty-fourth harmonic
8188	SRC 2 Vb Harm[25]	%	Source 2 phase B voltage twenty-fifth harmonic
8189	SRC 2 Vc THD	%	Source 2 phase C voltage total harmonic distortion (THD)
8190	SRC 2 Vc Harm[2]	%	Source 2 phase C voltage second harmonic
8191	SRC 2 Vc Harm[3]	%	Source 2 phase C voltage third harmonic
8192	SRC 2 Vc Harm[4]	%	Source 2 phase C voltage fourth harmonic
8193	SRC 2 Vc Harm[5]	%	Source 2 phase C voltage fifth harmonic
8194	SRC 2 Vc Harm[6]	%	Source 2 phase C voltage sixth harmonic
8195	SRC 2 Vc Harm[7]	%	Source 2 phase C voltage seventh harmonic
8196	SRC 2 Vc Harm[8]	%	Source 2 phase C voltage eighth harmonic
8197	SRC 2 Vc Harm[9]	%	Source 2 phase C voltage ninth harmonic
8198	SRC 2 Vc Harm[10]	%	Source 2 phase C voltage tenth harmonic
8199	SRC 2 Vc Harm[11]	%	Source 2 phase C voltage eleventh harmonic
8200	SRC 2 Vc Harm[12	%	Source 2 phase C voltage twelfth harmonic
8201	SRC 2 Vc Harm[13]	%	Source 2 phase C voltage thirteenth harmonic
8202	SRC 2 Vc Harm[14]	%	Source 2 phase C voltage fourteenth harmonic
8203	SRC 2 Vc Harm[15]	%	Source 2 phase C voltage fifteenth harmonic
8204	SRC 2 Vc Harm[16]	%	Source 2 phase C voltage sixteenth harmonic
8205	SRC 2 Vc Harm[17]	%	Source 2 phase C voltage seventeenth harmonic
8206	SRC 2 Vc Harm[18]	%	Source 2 phase C voltage eighteenth harmonic
8207	SRC 2 Vc Harm[19]	%	Source 2 phase C voltage nineteenth harmonic
8208	SRC 2 Vc Harm[20]	%	Source 2 phase C voltage twentieth harmonic
8209	SRC 2 Vc Harm[21]	%	Source 2 phase C voltage twenty-first harmonic
8210	SRC 2 Vc Harm[22]	%	Source 2 phase C voltage twenty-second harmonic

Table A–1: FLEXANALOG DATA ITEMS (Sheet 11 of 28)

DECIMAL ADDRESS	FLEXANALOG NAME	UNITS	DESCRIPTION
8211	SRC 2 Vc Harm[23]	%	Source 2 phase C voltage twenty-third harmonic
8212	SRC 2 Vc Harm[24]	%	Source 2 phase C voltage twenty-fourth harmonic
8213	SRC 2 Vc Harm[25]	%	Source 2 phase C voltage twenty-fifth harmonic
8214	SRC 3 Va THD	%	Source 3 phase A voltage total harmonic distortion (THD)
8215	SRC 3 Va Harm[2]	%	Source 3 phase A voltage second harmonic
8216	SRC 3 Va Harm[3]	%	Source 3 phase A voltage third harmonic
8217	SRC 3 Va Harm[4]	%	Source 3 phase A voltage fourth harmonic
8218	SRC 3 Va Harm[5]	%	Source 3 phase A voltage fifth harmonic
8219	SRC 3 Va Harm[6]	%	Source 3 phase A voltage sixth harmonic
8220	SRC 3 Va Harm[7]	%	Source 3 phase A voltage seventh harmonic
8221	SRC 3 Va Harm[8]	%	Source 3 phase A voltage eighth harmonic
8222	SRC 3 Va Harm[9]	%	Source 3 phase A voltage ninth harmonic
8223	SRC 3 Va Harm[10]	%	Source 3 phase A voltage tenth harmonic
8224	SRC 3 Va Harm[11]	%	Source 3 phase A voltage eleventh harmonic
8225	SRC 3 Va Harm[12]	%	Source 3 phase A voltage twelfth harmonic
8226	SRC 3 Va Harm[13]	%	Source 3 phase A voltage thirteenth harmonic
8227	SRC 3 Va Harm[14]	%	Source 3 phase A voltage fourteenth harmonic
8228	SRC 3 Va Harm[15]	%	Source 3 phase A voltage fifteenth harmonic
8229	SRC 3 Va Harm[16]	%	Source 3 phase A voltage sixteenth harmonic
8230	SRC 3 Va Harm[17]	%	Source 3 phase A voltage seventeenth harmonic
8231	SRC 3 Va Harm[18]	%	Source 3 phase A voltage eighteenth harmonic
8232	SRC 3 Va Harm[19]	%	Source 3 phase A voltage nineteenth harmonic
8233	SRC 3 Va Harm[20]	%	Source 3 phase A voltage twentieth harmonic
8234	SRC 3 Va Harm[21]	%	Source 3 phase A voltage twenty-first harmonic
8235	SRC 3 Va Harm[22]	%	Source 3 phase A voltage twenty-second harmonic
8236	SRC 3 Va Harm[23]	%	Source 3 phase A voltage twenty-third harmonic
8237	SRC 3 Va Harm[24]	%	Source 3 phase A voltage twenty-fourth harmonic
8238	SRC 3 Va Harm[25]	%	Source 3 phase A voltage twenty-fifth harmonic
8239	SRC 3 Vb THD	%	Source 3 phase B voltage total harmonic distortion (THD)
8240	SRC 3 Vb Harm[2]	%	Source 3 phase B voltage second harmonic
8241	SRC 3 Vb Harm[3]	%	Source 3 phase B voltage third harmonic
8242	SRC 3 Vb Harm[4]	%	Source 3 phase B voltage fourth harmonic
8243	SRC 3 Vb Harm[5]	%	Source 3 phase B voltage fifth harmonic
8244	SRC 3 Vb Harm[6]	%	Source 3 phase B voltage sixth harmonic
8245	SRC 3 Vb Harm[7]	%	Source 3 phase B voltage seventh harmonic
8246	SRC 3 Vb Harm[8]	%	Source 3 phase B voltage eighth harmonic
8247	SRC 3 Vb Harm[9]	%	Source 3 phase B voltage ninth harmonic
8248	SRC 3 Vb Harm[10]	%	Source 3 phase B voltage tenth harmonic
8249	SRC 3 Vb Harm[11]	%	Source 3 phase B voltage eleventh harmonic
8250	SRC 3 Vb Harm[12]	%	Source 3 phase B voltage twelfth harmonic
8251	SRC 3 Vb Harm[13]	%	Source 3 phase B voltage thirteenth harmonic
8252	SRC 3 Vb Harm[14]	%	Source 3 phase B voltage fourteenth harmonic
8253	SRC 3 Vb Harm[15]	%	Source 3 phase B voltage fifteenth harmonic
8254	SRC 3 Vb Harm[16]	%	Source 3 phase B voltage sixteenth harmonic
8255	SRC 3 Vb Harm[17]	%	Source 3 phase B voltage seventeenth harmonic
8256	SRC 3 Vb Harm[18]	%	Source 3 phase B voltage eighteenth harmonic
8257	SRC 3 Vb Harm[19]	%	Source 3 phase B voltage nineteenth harmonic

A

Table A–1: FLEXANALOG DATA ITEMS (Sheet 12 of 28)

DECIMAL ADDRESS	FLEXANALOG NAME	UNITS	DESCRIPTION
8258	SRC 3 Vb Harm[20]	%	Source 3 phase B voltage twentieth harmonic
8259	SRC 3 Vb Harm[21]	%	Source 3 phase B voltage twenty-first harmonic
8260	SRC 3 Vb Harm[22]	%	Source 3 phase B voltage twenty-second harmonic
8261	SRC 3 Vb Harm[23]	%	Source 3 phase B voltage twenty-third harmonic
8262	SRC 3 Vb Harm[24]	%	Source 3 phase B voltage twenty-fourth harmonic
8263	SRC 3 Vb Harm[25]	%	Source 3 phase B voltage twenty-fifth harmonic
8264	SRC 3 Vc THD	%	Source 3 phase C voltage total harmonic distortion (THD)
8265	SRC 3 Vc Harm[2]	%	Source 3 phase C voltage second harmonic
8266	SRC 3 Vc Harm[3]	%	Source 3 phase C voltage third harmonic
8267	SRC 3 Vc Harm[4]	%	Source 3 phase C voltage fourth harmonic
8268	SRC 3 Vc Harm[5]	%	Source 3 phase C voltage fifth harmonic
8269	SRC 3 Vc Harm[6]	%	Source 3 phase C voltage sixth harmonic
8270	SRC 3 Vc Harm[7]	%	Source 3 phase C voltage seventh harmonic
8271	SRC 3 Vc Harm[8]	%	Source 3 phase C voltage eighth harmonic
8272	SRC 3 Vc Harm[9]	%	Source 3 phase C voltage ninth harmonic
8273	SRC 3 Vc Harm[10]	%	Source 3 phase C voltage tenth harmonic
8274	SRC 3 Vc Harm[11]	%	Source 3 phase C voltage eleventh harmonic
8275	SRC 3 Vc Harm[12]	%	Source 3 phase C voltage twelfth harmonic
8276	SRC 3 Vc Harm[13]	%	Source 3 phase C voltage thirteenth harmonic
8277	SRC 3 Vc Harm[14]	%	Source 3 phase C voltage fourteenth harmonic
8278	SRC 3 Vc Harm[15]	%	Source 3 phase C voltage fifteenth harmonic
8279	SRC 3 Vc Harm[16]	%	Source 3 phase C voltage sixteenth harmonic
8280	SRC 3 Vc Harm[17]	%	Source 3 phase C voltage seventeenth harmonic
8281	SRC 3 Vc Harm[18]	%	Source 3 phase C voltage eighteenth harmonic
8282	SRC 3 Vc Harm[19]	%	Source 3 phase C voltage nineteenth harmonic
8283	SRC 3 Vc Harm[20]	%	Source 3 phase C voltage twentieth harmonic
8284	SRC 3 Vc Harm[21]	%	Source 3 phase C voltage twenty-first harmonic
8285	SRC 3 Vc Harm[22]	%	Source 3 phase C voltage twenty-second harmonic
8286	SRC 3 Vc Harm[23]	%	Source 3 phase C voltage twenty-third harmonic
8287	SRC 3 Vc Harm[24]	%	Source 3 phase C voltage twenty-fourth harmonic
8288	SRC 3 Vc Harm[25]	%	Source 3 phase C voltage twenty-fifth harmonic
8289	SRC 4 Va THD	%	Source 4 phase A voltage total harmonic distortion (THD)
8290	SRC 4 Va Harm[2]	%	Source 4 phase A voltage second harmonic
8291	SRC 4 Va Harm[3]	%	Source 4 phase A voltage third harmonic
8292	SRC 4 Va Harm[4]	%	Source 4 phase A voltage fourth harmonic
8293	SRC 4 Va Harm[5]	%	Source 4 phase A voltage fifth harmonic
8294	SRC 4 Va Harm[6]	%	Source 4 phase A voltage sixth harmonic
8295	SRC 4 Va Harm[7]	%	Source 4 phase A voltage seventh harmonic
8296	SRC 4 Va Harm[8]	%	Source 4 phase A voltage eighth harmonic
8297	SRC 4 Va Harm[9]	%	Source 4 phase A voltage ninth harmonic
8298	SRC 4 Va Harm[10]	%	Source 4 phase A voltage tenth harmonic
8299	SRC 4 Va Harm[11]	%	Source 4 phase A voltage eleventh harmonic
8300	SRC 4 Va Harm[12]	%	Source 4 phase A voltage twelfth harmonic
8301	SRC 4 Va Harm[13]	%	Source 4 phase A voltage thirteenth harmonic
8302	SRC 4 Va Harm[14]	%	Source 4 phase A voltage fourteenth harmonic
8303	SRC 4 Va Harm[15]	%	Source 4 phase A voltage fifteenth harmonic
8304	SRC 4 Va Harm[16]	%	Source 4 phase A voltage sixteenth harmonic

Table A–1: FLEXANALOG DATA ITEMS (Sheet 13 of 28)

DECIMAL ADDRESS	FLEXANALOG NAME	UNITS	DESCRIPTION
8305	SRC 4 Va Harm[17]	%	Source 4 phase A voltage seventeenth harmonic
8306	SRC 4 Va Harm[18]	%	Source 4 phase A voltage eighteenth harmonic
8307	SRC 4 Va Harm[19]	%	Source 4 phase A voltage nineteenth harmonic
8308	SRC 4 Va Harm[20]	%	Source 4 phase A voltage twentieth harmonic
8309	SRC 4 Va Harm[21]	%	Source 4 phase A voltage twenty-first harmonic
8310	SRC 4 Va Harm[22]	%	Source 4 phase A voltage twenty-second harmonic
8311	SRC 4 Va Harm[23]	%	Source 4 phase A voltage twenty-third harmonic
8312	SRC 4 Va Harm[24]	%	Source 4 phase A voltage twenty-fourth harmonic
8313	SRC 4 Va Harm[25]	%	Source 4 phase A voltage twenty-fifth harmonic
8314	SRC 4 Vb THD	%	Source 4 phase B voltage total harmonic distortion (THD)
8315	SRC 4 Vb Harm[2]	%	Source 4 phase B voltage second harmonic
8316	SRC 4 Vb Harm[3]	%	Source 4 phase B voltage third harmonic
8317	SRC 4 Vb Harm[4]	%	Source 4 phase B voltage fourth harmonic
8318	SRC 4 Vb Harm[5]	%	Source 4 phase B voltage fifth harmonic
8319	SRC 4 Vb Harm[6]	%	Source 4 phase B voltage sixth harmonic
8320	SRC 4 Vb Harm[7]	%	Source 4 phase B voltage seventh harmonic
8321	SRC 4 Vb Harm[8]	%	Source 4 phase B voltage eighth harmonic
8322	SRC 4 Vb Harm[9]	%	Source 4 phase B voltage ninth harmonic
8323	SRC 4 Vb Harm[10]	%	Source 4 phase B voltage tenth harmonic
8324	SRC 4 Vb Harm[11]	%	Source 4 phase B voltage eleventh harmonic
8325	SRC 4 Vb Harm[12]	%	Source 4 phase B voltage twelfth harmonic
8326	SRC 4 Vb Harm[13]	%	Source 4 phase B voltage thirteenth harmonic
8327	SRC 4 Vb Harm[14]	%	Source 4 phase B voltage fourteenth harmonic
8328	SRC 4 Vb Harm[15]	%	Source 4 phase B voltage fifteenth harmonic
8329	SRC 4 Vb Harm[16]	%	Source 4 phase B voltage sixteenth harmonic
8330	SRC 4 Vb Harm[17]	%	Source 4 phase B voltage seventeenth harmonic
8331	SRC 4 Vb Harm[18]	%	Source 4 phase B voltage eighteenth harmonic
8332	SRC 4 Vb Harm[19]	%	Source 4 phase B voltage nineteenth harmonic
8333	SRC 4 Vb Harm[20]	%	Source 4 phase B voltage twentieth harmonic
8334	SRC 4 Vb Harm[21]	%	Source 4 phase B voltage twenty-first harmonic
8335	SRC 4 Vb Harm[22]	%	Source 4 phase B voltage twenty-second harmonic
8336	SRC 4 Vb Harm[23]	%	Source 4 phase B voltage twenty-third harmonic
8337	SRC 4 Vb Harm[24]	%	Source 4 phase B voltage twenty-fourth harmonic
8338	SRC 4 Vb Harm[25]	%	Source 4 phase B voltage twenty-fifth harmonic
8339	SRC 4 Vc THD	%	Source 4 phase C voltage total harmonic distortion (THD)
8340	SRC 4 Vc Harm[2]	%	Source 4 phase C voltage second harmonic
8341	SRC 4 Vc Harm[3	%	Source 4 phase C voltage third harmonic
8342	SRC 4 Vc Harm[4]	%	Source 4 phase C voltage fourth harmonic
8343	SRC 4 Vc Harm[5]	%	Source 4 phase C voltage fifth harmonic
8344	SRC 4 Vc Harm[6]	%	Source 4 phase C voltage sixth harmonic
8345	SRC 4 Vc Harm[7]	%	Source 4 phase C voltage seventh harmonic
8346	SRC 4 Vc Harm[8]	%	Source 4 phase C voltage eighth harmonic
8347	SRC 4 Vc Harm[9]	%	Source 4 phase C voltage ninth harmonic
8348	SRC 4 Vc Harm[10]	%	Source 4 phase C voltage tenth harmonic
8349	SRC 4 Vc Harm[11]	%	Source 4 phase C voltage eleventh harmonic
8350	SRC 4 Vc Harm[12]	%	Source 4 phase C voltage twelfth harmonic
8351	SRC 4 Vc Harm[13]	%	Source 4 phase C voltage thirteenth harmonic

A

Table A–1: FLEXANALOG DATA ITEMS (Sheet 14 of 28)

DECIMAL ADDRESS	FLEXANALOG NAME	UNITS	DESCRIPTION
8352	SRC 4 Vc Harm[14]	%	Source 4 phase C voltage fourteenth harmonic
8353	SRC 4 Vc Harm[15]	%	Source 4 phase C voltage fifteenth harmonic
8354	SRC 4 Vc Harm[16]	%	Source 4 phase C voltage sixteenth harmonic
8355	SRC 4 Vc Harm[17]	%	Source 4 phase C voltage seventeenth harmonic
8356	SRC 4 Vc Harm[18]	%	Source 4 phase C voltage eighteenth harmonic
8357	SRC 4 Vc Harm[19]	%	Source 4 phase C voltage nineteenth harmonic
8358	SRC 4 Vc Harm[20]	%	Source 4 phase C voltage twentieth harmonic
8359	SRC 4 Vc Harm[21]	%	Source 4 phase C voltage twenty-first harmonic
8360	SRC 4 Vc Harm[22]	%	Source 4 phase C voltage twenty-second harmonic
8361	SRC 4 Vc Harm[23]	%	Source 4 phase C voltage twenty-third harmonic
8362	SRC 4 Vc Harm[24]	%	Source 4 phase C voltage twenty-fourth harmonic
8363	SRC 4 Vc Harm[25]	%	Source 4 phase C voltage twenty-fifth harmonic
9216	Synchchk 1 Delta V	Volts	Synchrocheck 1 delta voltage
9218	Synchchk 1 Delta F	Hz	Synchrocheck 1 delta frequency
9219	Synchchk 1 Delta Phs	Degrees	Synchrocheck 1 delta phase
9220	Synchchk 2 Delta V	Volts	Synchrocheck 2 delta voltage
9222	Synchchk 2 Delta F	Hz	Synchrocheck 2 delta frequency
9223	Synchchk 2 Delta Phs	Degrees	Synchrocheck 2 delta phase
9224	Synchchk 3 Delta V	Volts	Synchrocheck 3 delta voltage
9226	Synchchk 3 Delta F	Hz	Synchrocheck 3 delta frequency
9227	Synchchk 3 Delta Phs	Degrees	Synchrocheck 3 delta phase
9228	Synchchk 4 Delta V	Volts	Synchrocheck 4 delta voltage
9230	Synchchk 4 Delta F	Hz	Synchrocheck 4 delta frequency
9231	Synchchk 4 Delta Phs	Degrees	Synchrocheck 4 delta phase
9581	PMU 1 Va Mag	Volts	Phasor measurement unit 1 phase A voltage magnitude
9583	PMU 1 Va Angle	Degrees	Phasor measurement unit 1 phase A voltage angle
9584	PMU 1 Vb Mag	Volts	Phasor measurement unit 1 phase B voltage magnitude
9586	PMU 1 Vb Angle	Degrees	Phasor measurement unit 1 phase B voltage angle
9587	PMU 1 Vc Mag	Volts	Phasor measurement unit 1 phase C voltage magnitude
9589	PMU 1 Vc Angle	Degrees	Phasor measurement unit 1 phase C voltage angle
9590	PMU 1 Vx Mag	Volts	Phasor measurement unit 1 auxiliary voltage magnitude
9592	PMU 1 Vx Angle	Degrees	Phasor measurement unit 1 auxiliary voltage angle
9593	PMU 1 V1 Mag	Volts	Phasor measurement unit 1 positive-sequence voltage magnitude
9595	PMU 1 V1 Angle	Degrees	Phasor measurement unit 1 positive-sequence voltage angle
9596	PMU 1 V2 Mag	Volts	Phasor measurement unit 1 negative-sequence voltage magnitude
9598	PMU 1 V2 Angle	Degrees	Phasor measurement unit 1 negative-sequence voltage angle
9599	PMU 1 V0 Mag	Volts	Phasor measurement unit 1 zero-sequence voltage magnitude
9601	PMU 1 V0 Angle	Degrees	Phasor measurement unit 1 zero-sequence voltage angle
9602	PMU 1 Ia Mag	Amps	Phasor measurement unit 1 phase A current magnitude
9604	PMU 1 Ia Angle	Degrees	Phasor measurement unit 1 phase A current angle
9605	PMU 1 Ib Mag	Amps	Phasor measurement unit 1 phase B current magnitude
9607	PMU 1 Ib Angle	Degrees	Phasor measurement unit 1 phase B current angle
9608	PMU 1 Ic Mag	Amps	Phasor measurement unit 1 phase C current magnitude
9610	PMU 1 Ic Angle	Degrees	Phasor measurement unit 1 phase C current angle
9611	PMU 1 Ig Mag	Amps	Phasor measurement unit 1 ground current magnitude
9613	PMU 1 Ig Angle	Degrees	Phasor measurement unit 1 ground current angle
9614	PMU 1 I1 Mag	Amps	Phasor measurement unit 1 positive-sequence current magnitude

Table A–1: FLEXANALOG DATA ITEMS (Sheet 15 of 28)

DECIMAL ADDRESS	FLEXANALOG NAME	UNITS	DESCRIPTION
9616	PMU 1 I1 Angle	Degrees	Phasor measurement unit 1 positive-sequence current angle
9617	PMU 1 I2 Mag	Amps	Phasor measurement unit 1 negative-sequence current magnitude
9619	PMU 1 I2 Angle	Degrees	Phasor measurement unit 1 negative-sequence current angle
9620	PMU 1 I0 Mag	Amps	Phasor measurement unit 1 zero-sequence current magnitude
9622	PMU 1 I0 Angle	Degrees	Phasor measurement unit 1 zero-sequence current angle
9623	PMU 1 Freq	Hz	Phasor measurement unit 1 frequency
9625	PMU 1 df dt	Hz/s	Phasor measurement unit 1 rate of change of frequency
9626	PMU 1 Conf Ch	---	Phasor measurement unit 1 configuration change counter
10240	SRC 1 Ia THD	%	Source 1 phase A current total harmonic distortion
10241	SRC 1 Ia Harm[2]	%	Source 1 phase A current second harmonic
10242	SRC 1 Ia Harm[3]	%	Source 1 phase A current third harmonic
10243	SRC 1 Ia Harm[4]	%	Source 1 phase A current fourth harmonic
10244	SRC 1 Ia Harm[5]	%	Source 1 phase A current fifth harmonic
10245	SRC 1 Ia Harm[6]	%	Source 1 phase A current sixth harmonic
10246	SRC 1 Ia Harm[7]	%	Source 1 phase A current seventh harmonic
10247	SRC 1 Ia Harm[8]	%	Source 1 phase A current eighth harmonic
10248	SRC 1 Ia Harm[9]	%	Source 1 phase A current ninth harmonic
10249	SRC 1 Ia Harm[10]	%	Source 1 phase A current tenth harmonic
10250	SRC 1 Ia Harm[11]	%	Source 1 phase A current eleventh harmonic
10251	SRC 1 Ia Harm[12]	%	Source 1 phase A current twelfth harmonic
10252	SRC 1 Ia Harm[13]	%	Source 1 phase A current thirteenth harmonic
10253	SRC 1 Ia Harm[14]	%	Source 1 phase A current fourteenth harmonic
10254	SRC 1 Ia Harm[15]	%	Source 1 phase A current fifteenth harmonic
10255	SRC 1 Ia Harm[16]	%	Source 1 phase A current sixteenth harmonic
10256	SRC 1 Ia Harm[17]	%	Source 1 phase A current seventeenth harmonic
10257	SRC 1 Ia Harm[18]	%	Source 1 phase A current eighteenth harmonic
10258	SRC 1 Ia Harm[19]	%	Source 1 phase A current nineteenth harmonic
10259	SRC 1 Ia Harm[20]	%	Source 1 phase A current twentieth harmonic
10260	SRC 1 Ia Harm[21]	%	Source 1 phase A current twenty-first harmonic
10261	SRC 1 Ia Harm[22]	%	Source 1 phase A current twenty-second harmonic
10262	SRC 1 Ia Harm[23]	%	Source 1 phase A current twenty-third harmonic
10263	SRC 1 Ia Harm[24]	%	Source 1 phase A current twenty-fourth harmonic
10264	SRC 1 Ia Harm[25]	%	Source 1 phase A current twenty-fifth harmonic
10273	SRC 1 Ib THD	%	Source 1 phase B current total harmonic distortion
10274	SRC 1 Ib Harm[2]	%	Source 1 phase B current second harmonic
10275	SRC 1 Ib Harm[3]	%	Source 1 phase B current third harmonic
10276	SRC 1 Ib Harm[4]	%	Source 1 phase B current fourth harmonic
10277	SRC 1 Ib Harm[5]	%	Source 1 phase B current fifth harmonic
10278	SRC 1 Ib Harm[6]	%	Source 1 phase B current sixth harmonic
10279	SRC 1 Ib Harm[7]	%	Source 1 phase B current seventh harmonic
10280	SRC 1 Ib Harm[8]	%	Source 1 phase B current eighth harmonic
10281	SRC 1 Ib Harm[9]	%	Source 1 phase B current ninth harmonic
10282	SRC 1 Ib Harm[10]	%	Source 1 phase B current tenth harmonic
10283	SRC 1 Ib Harm[11]	%	Source 1 phase B current eleventh harmonic
10284	SRC 1 Ib Harm[12]	%	Source 1 phase B current twelfth harmonic
10285	SRC 1 Ib Harm[13]	%	Source 1 phase B current thirteenth harmonic
10286	SRC 1 Ib Harm[14]	%	Source 1 phase B current fourteenth harmonic

A

Table A–1: FLEXANALOG DATA ITEMS (Sheet 16 of 28)

DECIMAL ADDRESS	FLEXANALOG NAME	UNITS	DESCRIPTION
10287	SRC 1 Ib Harm[15]	%	Source 1 phase B current fifteenth harmonic
10288	SRC 1 Ib Harm[16]	%	Source 1 phase B current sixteenth harmonic
10289	SRC 1 Ib Harm[17]	%	Source 1 phase B current seventeenth harmonic
10290	SRC 1 Ib Harm[18]	%	Source 1 phase B current eighteenth harmonic
10291	SRC 1 Ib Harm[19]	%	Source 1 phase B current nineteenth harmonic
10292	SRC 1 Ib Harm[20]	%	Source 1 phase B current twentieth harmonic
10293	SRC 1 Ib Harm[21]	%	Source 1 phase B current twenty-first harmonic
10294	SRC 1 Ib Harm[22]	%	Source 1 phase B current twenty-second harmonic
10295	SRC 1 Ib Harm[23]	%	Source 1 phase B current twenty-third harmonic
10296	SRC 1 Ib Harm[24]	%	Source 1 phase B current twenty-fourth harmonic
10297	SRC 1 Ib Harm[25]	%	Source 1 phase B current twenty-fifth harmonic
10306	SRC 1 Ic THD	%	Source 1 phase C current total harmonic distortion
10307	SRC 1 Ic Harm[2]	%	Source 1 phase C current second harmonic
10308	SRC 1 Ic Harm[3]	%	Source 1 phase C current third harmonic
10309	SRC 1 Ic Harm[4]	%	Source 1 phase C current fourth harmonic
10310	SRC 1 Ic Harm[5]	%	Source 1 phase C current fifth harmonic
10311	SRC 1 Ic Harm[6]	%	Source 1 phase C current sixth harmonic
10312	SRC 1 Ic Harm[7]	%	Source 1 phase C current seventh harmonic
10313	SRC 1 Ic Harm[8]	%	Source 1 phase C current eighth harmonic
10314	SRC 1 Ic Harm[9]	%	Source 1 phase C current ninth harmonic
10315	SRC 1 Ic Harm[10]	%	Source 1 phase C current tenth harmonic
10316	SRC 1 Ic Harm[11]	%	Source 1 phase C current eleventh harmonic
10317	SRC 1 Ic Harm[12]	%	Source 1 phase C current twelfth harmonic
10318	SRC 1 Ic Harm[13]	%	Source 1 phase C current thirteenth harmonic
10319	SRC 1 Ic Harm[14]	%	Source 1 phase C current fourteenth harmonic
10320	SRC 1 Ic Harm[15]	%	Source 1 phase C current fifteenth harmonic
10321	SRC 1 Ic Harm[16]	%	Source 1 phase C current sixteenth harmonic
10322	SRC 1 Ic Harm[17]	%	Source 1 phase C current seventeenth harmonic
10323	SRC 1 Ic Harm[18]	%	Source 1 phase C current eighteenth harmonic
10324	SRC 1 Ic Harm[19]	%	Source 1 phase C current nineteenth harmonic
10325	SRC 1 Ic Harm[20]	%	Source 1 phase C current twentieth harmonic
10326	SRC 1 Ic Harm[21]	%	Source 1 phase C current twenty-first harmonic
10327	SRC 1 Ic Harm[22]	%	Source 1 phase C current twenty-second harmonic
10328	SRC 1 Ic Harm[23]	%	Source 1 phase C current twenty-third harmonic
10329	SRC 1 Ic Harm[24]	%	Source 1 phase C current twenty-fourth harmonic
10330	SRC 1 Ic Harm[25]	%	Source 1 phase C current twenty-fifth harmonic
10339	SRC 2 Ia THD	%	Source 2 phase A current total harmonic distortion
10340	SRC 2 Ia Harm[2]	%	Source 2 phase A current second harmonic
10341	SRC 2 Ia Harm[3]	%	Source 2 phase A current third harmonic
10342	SRC 2 Ia Harm[4]	%	Source 2 phase A current fourth harmonic
10343	SRC 2 Ia Harm[5]	%	Source 2 phase A current fifth harmonic
10344	SRC 2 Ia Harm[6]	%	Source 2 phase A current sixth harmonic
10345	SRC 2 Ia Harm[7]	%	Source 2 phase A current seventh harmonic
10346	SRC 2 Ia Harm[8]	%	Source 2 phase A current eighth harmonic
10347	SRC 2 Ia Harm[9]	%	Source 2 phase A current ninth harmonic
10348	SRC 2 Ia Harm[10]	%	Source 2 phase A current tenth harmonic
10349	SRC 2 Ia Harm[11]	%	Source 2 phase A current eleventh harmonic

Table A–1: FLEXANALOG DATA ITEMS (Sheet 17 of 28)

DECIMAL ADDRESS	FLEXANALOG NAME	UNITS	DESCRIPTION
10350	SRC 2 Ia Harm[12]	%	Source 2 phase A current twelfth harmonic
10351	SRC 2 Ia Harm[13]	%	Source 2 phase A current thirteenth harmonic
10352	SRC 2 Ia Harm[14]	%	Source 2 phase A current fourteenth harmonic
10353	SRC 2 Ia Harm[15]	%	Source 2 phase A current fifteenth harmonic
10354	SRC 2 Ia Harm[16]	%	Source 2 phase A current sixteenth harmonic
10355	SRC 2 Ia Harm[17]	%	Source 2 phase A current seventeenth harmonic
10356	SRC 2 Ia Harm[18]	%	Source 2 phase A current eighteenth harmonic
10357	SRC 2 Ia Harm[19]	%	Source 2 phase A current nineteenth harmonic
10358	SRC 2 Ia Harm[20]	%	Source 2 phase A current twentieth harmonic
10359	SRC 2 Ia Harm[21]	%	Source 2 phase A current twenty-first harmonic
10360	SRC 2 Ia Harm[22]	%	Source 2 phase A current twenty-second harmonic
10361	SRC 2 Ia Harm[23]	%	Source 2 phase A current twenty-third harmonic
10362	SRC 2 Ia Harm[24]	%	Source 2 phase A current twenty-fourth harmonic
10363	SRC 2 Ia Harm[25]	%	Source 2 phase A current twenty-fifth harmonic
10372	SRC 2 Ib THD	%	Source 2 phase B current total harmonic distortion
10373	SRC 2 Ib Harm[2]	%	Source 2 phase B current second harmonic
10374	SRC 2 Ib Harm[3]	%	Source 2 phase B current third harmonic
10375	SRC 2 Ib Harm[4]	%	Source 2 phase B current fourth harmonic
10376	SRC 2 Ib Harm[5]	%	Source 2 phase B current fifth harmonic
10377	SRC 2 Ib Harm[6]	%	Source 2 phase B current sixth harmonic
10378	SRC 2 Ib Harm[7]	%	Source 2 phase B current seventh harmonic
10379	SRC 2 Ib Harm[8]	%	Source 2 phase B current eighth harmonic
10380	SRC 2 Ib Harm[9]	%	Source 2 phase B current ninth harmonic
10381	SRC 2 Ib Harm[10]	%	Source 2 phase B current tenth harmonic
10382	SRC 2 Ib Harm[11]	%	Source 2 phase B current eleventh harmonic
10383	SRC 2 Ib Harm[12]	%	Source 2 phase B current twelfth harmonic
10384	SRC 2 Ib Harm[13]	%	Source 2 phase B current thirteenth harmonic
10385	SRC 2 Ib Harm[14]	%	Source 2 phase B current fourteenth harmonic
10386	SRC 2 Ib Harm[15]	%	Source 2 phase B current fifteenth harmonic
10387	SRC 2 Ib Harm[16]	%	Source 2 phase B current sixteenth harmonic
10388	SRC 2 Ib Harm[17]	%	Source 2 phase B current seventeenth harmonic
10389	SRC 2 Ib Harm[18]	%	Source 2 phase B current eighteenth harmonic
10390	SRC 2 Ib Harm[19]	%	Source 2 phase B current nineteenth harmonic
10391	SRC 2 Ib Harm[20]	%	Source 2 phase B current twentieth harmonic
10392	SRC 2 Ib Harm[21]	%	Source 2 phase B current twenty-first harmonic
10393	SRC 2 Ib Harm[22]	%	Source 2 phase B current twenty-second harmonic
10394	SRC 2 Ib Harm[23]	%	Source 2 phase B current twenty-third harmonic
10395	SRC 2 Ib Harm[24]	%	Source 2 phase B current twenty-fourth harmonic
10396	SRC 2 Ib Harm[25]	%	Source 2 phase B current twenty-fifth harmonic
10405	SRC 2 Ic THD	%	Source 2 phase C current total harmonic distortion
10406	SRC 2 Ic Harm[2]	%	Source 2 phase C current second harmonic
10407	SRC 2 Ic Harm[3]	%	Source 2 phase C current third harmonic
10408	SRC 2 Ic Harm[4]	%	Source 2 phase C current fourth harmonic
10409	SRC 2 Ic Harm[5]	%	Source 2 phase C current fifth harmonic
10410	SRC 2 Ic Harm[6]	%	Source 2 phase C current sixth harmonic
10411	SRC 2 Ic Harm[7]	%	Source 2 phase C current seventh harmonic
10412	SRC 2 Ic Harm[8]	%	Source 2 phase C current eighth harmonic

A

Table A–1: FLEXANALOG DATA ITEMS (Sheet 18 of 28)

DECIMAL ADDRESS	FLEXANALOG NAME	UNITS	DESCRIPTION
10413	SRC 2 Ic Harm[9]	%	Source 2 phase C current ninth harmonic
10414	SRC 2 Ic Harm[10]	%	Source 2 phase C current tenth harmonic
10415	SRC 2 Ic Harm[11]	%	Source 2 phase C current eleventh harmonic
10416	SRC 2 Ic Harm[12]	%	Source 2 phase C current twelfth harmonic
10417	SRC 2 Ic Harm[13]	%	Source 2 phase C current thirteenth harmonic
10418	SRC 2 Ic Harm[14]	%	Source 2 phase C current fourteenth harmonic
10419	SRC 2 Ic Harm[15]	%	Source 2 phase C current fifteenth harmonic
10420	SRC 2 Ic Harm[16]	%	Source 2 phase C current sixteenth harmonic
10421	SRC 2 Ic Harm[17]	%	Source 2 phase C current seventeenth harmonic
10422	SRC 2 Ic Harm[18]	%	Source 2 phase C current eighteenth harmonic
10423	SRC 2 Ic Harm[19]	%	Source 2 phase C current nineteenth harmonic
10424	SRC 2 Ic Harm[20]	%	Source 2 phase C current twentieth harmonic
10425	SRC 2 Ic Harm[21]	%	Source 2 phase C current twenty-first harmonic
10426	SRC 2 Ic Harm[22]	%	Source 2 phase C current twenty-second harmonic
10427	SRC 2 Ic Harm[23]	%	Source 2 phase C current twenty-third harmonic
10428	SRC 2 Ic Harm[24]	%	Source 2 phase C current twenty-fourth harmonic
10429	SRC 2 Ic Harm[25]	%	Source 2 phase C current twenty-fifth harmonic
10438	SRC 3 Ia THD	%	Source 3 phase A current total harmonic distortion
10439	SRC 3 Ia Harm[2]	%	Source 3 phase A current second harmonic
10440	SRC 3 Ia Harm[3]	%	Source 3 phase A current third harmonic
10441	SRC 3 Ia Harm[4]	%	Source 3 phase A current fourth harmonic
10442	SRC 3 Ia Harm[5]	%	Source 3 phase A current fifth harmonic
10443	SRC 3 Ia Harm[6]	%	Source 3 phase A current sixth harmonic
10444	SRC 3 Ia Harm[7]	%	Source 3 phase A current seventh harmonic
10445	SRC 3 Ia Harm[8]	%	Source 3 phase A current eighth harmonic
10446	SRC 3 Ia Harm[9]	%	Source 3 phase A current ninth harmonic
10447	SRC 3 Ia Harm[10]	%	Source 3 phase A current tenth harmonic
10448	SRC 3 Ia Harm[11]	%	Source 3 phase A current eleventh harmonic
10449	SRC 3 Ia Harm[12]	%	Source 3 phase A current twelfth harmonic
10450	SRC 3 Ia Harm[13]	%	Source 3 phase A current thirteenth harmonic
10451	SRC 3 Ia Harm[14]	%	Source 3 phase A current fourteenth harmonic
10452	SRC 3 Ia Harm[15]	%	Source 3 phase A current fifteenth harmonic
10453	SRC 3 Ia Harm[16]	%	Source 3 phase A current sixteenth harmonic
10454	SRC 3 Ia Harm[17]	%	Source 3 phase A current seventeenth harmonic
10455	SRC 3 Ia Harm[18]	%	Source 3 phase A current eighteenth harmonic
10456	SRC 3 Ia Harm[19]	%	Source 3 phase A current nineteenth harmonic
10457	SRC 3 Ia Harm[20]	%	Source 3 phase A current twentieth harmonic
10458	SRC 3 Ia Harm[21]	%	Source 3 phase A current twenty-first harmonic
10459	SRC 3 Ia Harm[22]	%	Source 3 phase A current twenty-second harmonic
10460	SRC 3 Ia Harm[23]	%	Source 3 phase A current twenty-third harmonic
10461	SRC 3 Ia Harm[24]	%	Source 3 phase A current twenty-fourth harmonic
10462	SRC 3 Ia Harm[25]	%	Source 3 phase A current twenty-fifth harmonic
10471	SRC 3 Ib THD	%	Source 3 phase B current total harmonic distortion
10472	SRC 3 Ib Harm[2]	%	Source 3 phase B current second harmonic
10473	SRC 3 Ib Harm[3]	%	Source 3 phase B current third harmonic
10474	SRC 3 Ib Harm[4]	%	Source 3 phase B current fourth harmonic
10475	SRC 3 Ib Harm[5]	%	Source 3 phase B current fifth harmonic

Table A–1: FLEXANALOG DATA ITEMS (Sheet 19 of 28)

DECIMAL ADDRESS	FLEXANALOG NAME	UNITS	DESCRIPTION
10476	SRC 3 Ib Harm[6]	%	Source 3 phase B current sixth harmonic
10477	SRC 3 Ib Harm[7]	%	Source 3 phase B current seventh harmonic
10478	SRC 3 Ib Harm[8]	%	Source 3 phase B current eighth harmonic
10479	SRC 3 Ib Harm[9]	%	Source 3 phase B current ninth harmonic
10480	SRC 3 Ib Harm[10]	%	Source 3 phase B current tenth harmonic
10481	SRC 3 Ib Harm[11]	%	Source 3 phase B current eleventh harmonic
10482	SRC 3 Ib Harm[12]	%	Source 3 phase B current twelfth harmonic
10483	SRC 3 Ib Harm[13]	%	Source 3 phase B current thirteenth harmonic
10484	SRC 3 Ib Harm[14]	%	Source 3 phase B current fourteenth harmonic
10485	SRC 3 Ib Harm[15]	%	Source 3 phase B current fifteenth harmonic
10486	SRC 3 Ib Harm[16]	%	Source 3 phase B current sixteenth harmonic
10487	SRC 3 Ib Harm[17]	%	Source 3 phase B current seventeenth harmonic
10488	SRC 3 Ib Harm[18]	%	Source 3 phase B current eighteenth harmonic
10489	SRC 3 Ib Harm[19]	%	Source 3 phase B current nineteenth harmonic
10490	SRC 3 Ib Harm[20]	%	Source 3 phase B current twentieth harmonic
10491	SRC 3 Ib Harm[21]	%	Source 3 phase B current twenty-first harmonic
10492	SRC 3 Ib Harm[22]	%	Source 3 phase B current twenty-second harmonic
10493	SRC 3 Ib Harm[23]	%	Source 3 phase B current twenty-third harmonic
10494	SRC 3 Ib Harm[24]	%	Source 3 phase B current twenty-fourth harmonic
10495	SRC 3 Ib Harm[25]	%	Source 3 phase B current twenty-fifth harmonic
10504	SRC 3 Ic THD	%	Source 3 phase C current total harmonic distortion
10505	SRC 3 Ic Harm[2]	%	Source 3 phase C current second harmonic
10506	SRC 3 Ic Harm[3]	%	Source 3 phase C current third harmonic
10507	SRC 3 Ic Harm[4]	%	Source 3 phase C current fourth harmonic
10508	SRC 3 Ic Harm[5]	%	Source 3 phase C current fifth harmonic
10509	SRC 3 Ic Harm[6]	%	Source 3 phase C current sixth harmonic
10510	SRC 3 Ic Harm[7]	%	Source 3 phase C current seventh harmonic
10511	SRC 3 Ic Harm[8]	%	Source 3 phase C current eighth harmonic
10512	SRC 3 Ic Harm[9]	%	Source 3 phase C current ninth harmonic
10513	SRC 3 Ic Harm[10]	%	Source 3 phase C current tenth harmonic
10514	SRC 3 Ic Harm[11]	%	Source 3 phase C current eleventh harmonic
10515	SRC 3 Ic Harm[12]	%	Source 3 phase C current twelfth harmonic
10516	SRC 3 Ic Harm[13]	%	Source 3 phase C current thirteenth harmonic
10517	SRC 3 Ic Harm[14]	%	Source 3 phase C current fourteenth harmonic
10518	SRC 3 Ic Harm[15]	%	Source 3 phase C current fifteenth harmonic
10519	SRC 3 Ic Harm[16]	%	Source 3 phase C current sixteenth harmonic
10520	SRC 3 Ic Harm[17]	%	Source 3 phase C current seventeenth harmonic
10521	SRC 3 Ic Harm[18]	%	Source 3 phase C current eighteenth harmonic
10522	SRC 3 Ic Harm[19]	%	Source 3 phase C current nineteenth harmonic
10523	SRC 3 Ic Harm[20]	%	Source 3 phase C current twentieth harmonic
10524	SRC 3 Ic Harm[21]	%	Source 3 phase C current twenty-first harmonic
10525	SRC 3 Ic Harm[22]	%	Source 3 phase C current twenty-second harmonic
10526	SRC 3 Ic Harm[23]	%	Source 3 phase C current twenty-third harmonic
10527	SRC 3 Ic Harm[24]	%	Source 3 phase C current twenty-fourth harmonic
10528	SRC 3 Ic Harm[25]	%	Source 3 phase C current twenty-fifth harmonic
10537	SRC 4 Ia THD	%	Source 4 phase A current total harmonic distortion
10538	SRC 4 Ia Harm[2]	%	Source 4 phase A current second harmonic

A

Table A–1: FLEXANALOG DATA ITEMS (Sheet 20 of 28)

DECIMAL ADDRESS	FLEXANALOG NAME	UNITS	DESCRIPTION
10539	SRC 4 Ia Harm[3]	%	Source 4 phase A current third harmonic
10540	SRC 4 Ia Harm[4]	%	Source 4 phase A current fourth harmonic
10541	SRC 4 Ia Harm[5]	%	Source 4 phase A current fifth harmonic
10542	SRC 4 Ia Harm[6]	%	Source 4 phase A current sixth harmonic
10543	SRC 4 Ia Harm[7]	%	Source 4 phase A current seventh harmonic
10544	SRC 4 Ia Harm[8]	%	Source 4 phase A current eighth harmonic
10545	SRC 4 Ia Harm[9]	%	Source 4 phase A current ninth harmonic
10546	SRC 4 Ia Harm[10]	%	Source 4 phase A current tenth harmonic
10547	SRC 4 Ia Harm[11]	%	Source 4 phase A current eleventh harmonic
10548	SRC 4 Ia Harm[12]	%	Source 4 phase A current twelfth harmonic
10549	SRC 4 Ia Harm[13]	%	Source 4 phase A current thirteenth harmonic
10550	SRC 4 Ia Harm[14]	%	Source 4 phase A current fourteenth harmonic
10551	SRC 4 Ia Harm[15]	%	Source 4 phase A current fifteenth harmonic
10552	SRC 4 Ia Harm[16]	%	Source 4 phase A current sixteenth harmonic
10553	SRC 4 Ia Harm[17]	%	Source 4 phase A current seventeenth harmonic
10554	SRC 4 Ia Harm[18]	%	Source 4 phase A current eighteenth harmonic
10555	SRC 4 Ia Harm[19]	%	Source 4 phase A current nineteenth harmonic
10556	SRC 4 Ia Harm[20]	%	Source 4 phase A current twentieth harmonic
10557	SRC 4 Ia Harm[21]	%	Source 4 phase A current twenty-first harmonic
10558	SRC 4 Ia Harm[22]	%	Source 4 phase A current twenty-second harmonic
10559	SRC 4 Ia Harm[23]	%	Source 4 phase A current twenty-third harmonic
10560	SRC 4 Ia Harm[24]	%	Source 4 phase A current twenty-fourth harmonic
10561	SRC 4 Ia Harm[25]	%	Source 4 phase A current twenty-fifth harmonic
10570	SRC 4 Ib THD	%	Source 4 phase B current total harmonic distortion
10571	SRC 4 Ib Harm[2]	%	Source 4 phase B current second harmonic
10572	SRC 4 Ib Harm[3]	%	Source 4 phase B current third harmonic
10573	SRC 4 Ib Harm[4]	%	Source 4 phase B current fourth harmonic
10574	SRC 4 Ib Harm[5]	%	Source 4 phase B current fifth harmonic
10575	SRC 4 Ib Harm[6]	%	Source 4 phase B current sixth harmonic
10576	SRC 4 Ib Harm[7]	%	Source 4 phase B current seventh harmonic
10577	SRC 4 Ib Harm[8]	%	Source 4 phase B current eighth harmonic
10578	SRC 4 Ib Harm[9]	%	Source 4 phase B current ninth harmonic
10579	SRC 4 Ib Harm[10]	%	Source 4 phase B current tenth harmonic
10580	SRC 4 Ib Harm[11	%	Source 4 phase B current eleventh harmonic
10581	SRC 4 Ib Harm[12]	%	Source 4 phase B current twelfth harmonic
10582	SRC 4 Ib Harm[13]	%	Source 4 phase B current thirteenth harmonic
10583	SRC 4 Ib Harm[14]	%	Source 4 phase B current fourteenth harmonic
10584	SRC 4 Ib Harm[15]	%	Source 4 phase B current fifteenth harmonic
10585	SRC 4 Ib Harm[16]	%	Source 4 phase B current sixteenth harmonic
10586	SRC 4 Ib Harm[17]	%	Source 4 phase B current seventeenth harmonic
10587	SRC 4 Ib Harm[18]	%	Source 4 phase B current eighteenth harmonic
10588	SRC 4 Ib Harm[19]	%	Source 4 phase B current nineteenth harmonic
10589	SRC 4 Ib Harm[20]	%	Source 4 phase B current twentieth harmonic
10590	SRC 4 Ib Harm[21]	%	Source 4 phase B current twenty-first harmonic
10591	SRC 4 Ib Harm[22]	%	Source 4 phase B current twenty-second harmonic
10592	SRC 4 Ib Harm[23]	%	Source 4 phase B current twenty-third harmonic
10593	SRC 4 Ib Harm[24]	%	Source 4 phase B current twenty-fourth harmonic

Table A–1: FLEXANALOG DATA ITEMS (Sheet 21 of 28)

DECIMAL ADDRESS	FLEXANALOG NAME	UNITS	DESCRIPTION
10594	SRC 4 Ib Harm[25]	%	Source 4 phase B current twenty-fifth harmonic
10603	SRC 4 Ic THD	%	Source 4 phase C current total harmonic distortion
10604	SRC 4 Ic Harm[2]	%	Source 4 phase C current second harmonic
10605	SRC 4 Ic Harm[3]	%	Source 4 phase C current third harmonic
10606	SRC 4 Ic Harm[4]	%	Source 4 phase C current fourth harmonic
10607	SRC 4 Ic Harm[5]	%	Source 4 phase C current fifth harmonic
10608	SRC 4 Ic Harm[6]	%	Source 4 phase C current sixth harmonic
10609	SRC 4 Ic Harm[7]	%	Source 4 phase C current seventh harmonic
10610	SRC 4 Ic Harm[8]	%	Source 4 phase C current eighth harmonic
10611	SRC 4 Ic Harm[9]	%	Source 4 phase C current ninth harmonic
10612	SRC 4 Ic Harm[10]	%	Source 4 phase C current tenth harmonic
10613	SRC 4 Ic Harm[11]	%	Source 4 phase C current eleventh harmonic
10614	SRC 4 Ic Harm[12]	%	Source 4 phase C current twelfth harmonic
10615	SRC 4 Ic Harm[13]	%	Source 4 phase C current thirteenth harmonic
10616	SRC 4 Ic Harm[14]	%	Source 4 phase C current fourteenth harmonic
10617	SRC 4 Ic Harm[15]	%	Source 4 phase C current fifteenth harmonic
10618	SRC 4 Ic Harm[16]	%	Source 4 phase C current sixteenth harmonic
10619	SRC 4 Ic Harm[17]	%	Source 4 phase C current seventeenth harmonic
10620	SRC 4 Ic Harm[18]	%	Source 4 phase C current eighteenth harmonic
10621	SRC 4 Ic Harm[19]	%	Source 4 phase C current nineteenth harmonic
10622	SRC 4 Ic Harm[20]	%	Source 4 phase C current twentieth harmonic
10623	SRC 4 Ic Harm[21]	%	Source 4 phase C current twenty-first harmonic
10624	SRC 4 Ic Harm[22]	%	Source 4 phase C current twenty-second harmonic
10625	SRC 4 Ic Harm[23]	%	Source 4 phase C current twenty-third harmonic
10626	SRC 4 Ic Harm[24]	%	Source 4 phase C current twenty-fourth harmonic
10627	SRC 4 Ic Harm[25]	%	Source 4 phase C current twenty-fifth harmonic
10636	SRC 5 Ia THD	%	Source 5 phase A current total harmonic distortion
10637	SRC 5 Ia Harm[2]	%	Source 5 phase A current second harmonic
10638	SRC 5 Ia Harm[3]	%	Source 5 phase A current third harmonic
10639	SRC 5 Ia Harm[4]	%	Source 5 phase A current fourth harmonic
10640	SRC 5 Ia Harm[5]	%	Source 5 phase A current fifth harmonic
10641	SRC 5 Ia Harm[6]	%	Source 5 phase A current sixth harmonic
10642	SRC 5 Ia Harm[7]	%	Source 5 phase A current seventh harmonic
10643	SRC 5 Ia Harm[8]	%	Source 5 phase A current eighth harmonic
10644	SRC 5 Ia Harm[9]	%	Source 5 phase A current ninth harmonic
10645	SRC 5 Ia Harm[10]	%	Source 5 phase A current tenth harmonic
10646	SRC 5 Ia Harm[11]	%	Source 5 phase A current eleventh harmonic
10647	SRC 5 Ia Harm[12]	%	Source 5 phase A current twelfth harmonic
10648	SRC 5 Ia Harm[13]	%	Source 5 phase A current thirteenth harmonic
10649	SRC 5 Ia Harm[14]	%	Source 5 phase A current fourteenth harmonic
10650	SRC 5 Ia Harm[15]	%	Source 5 phase A current fifteenth harmonic
10651	SRC 5 Ia Harm[16]	%	Source 5 phase A current sixteenth harmonic
10652	SRC 5 Ia Harm[17]	%	Source 5 phase A current seventeenth harmonic
10653	SRC 5 Ia Harm[18]	%	Source 5 phase A current eighteenth harmonic
10654	SRC 5 Ia Harm[19]	%	Source 5 phase A current nineteenth harmonic
10655	SRC 5 Ia Harm[20]	%	Source 5 phase A current twentieth harmonic
10656	SRC 5 Ia Harm[21]	%	Source 5 phase A current twenty-first harmonic

A

Table A–1: FLEXANALOG DATA ITEMS (Sheet 22 of 28)

DECIMAL ADDRESS	FLEXANALOG NAME	UNITS	DESCRIPTION
10657	SRC 5 Ia Harm[22]	%	Source 5 phase A current twenty-second harmonic
10658	SRC 5 Ia Harm[23]	%	Source 5 phase A current twenty-third harmonic
10659	SRC 5 Ia Harm[24]	%	Source 5 phase A current twenty-fourth harmonic
10660	SRC 5 Ia Harm[25]	%	Source 5 phase A current twenty-fifth harmonic
10669	SRC 5 Ib THD	%	Source 5 phase B current total harmonic distortion
10670	SRC 5 Ib Harm[2]	%	Source 5 phase B current second harmonic
10671	SRC 5 Ib Harm[3]	%	Source 5 phase B current third harmonic
10672	SRC 5 Ib Harm[4]	%	Source 5 phase B current fourth harmonic
10673	SRC 5 Ib Harm[5]	%	Source 5 phase B current fifth harmonic
10674	SRC 5 Ib Harm[6]	%	Source 5 phase B current sixth harmonic
10675	SRC 5 Ib Harm[7]	%	Source 5 phase B current seventh harmonic
10676	SRC 5 Ib Harm[8]	%	Source 5 phase B current eighth harmonic
10677	SRC 5 Ib Harm[9]	%	Source 5 phase B current ninth harmonic
10678	SRC 5 Ib Harm[10]	%	Source 5 phase B current tenth harmonic
10679	SRC 5 Ib Harm[11]	%	Source 5 phase B current eleventh harmonic
10680	SRC 5 Ib Harm[12]	%	Source 5 phase B current twelfth harmonic
10681	SRC 5 Ib Harm[13]	%	Source 5 phase B current thirteenth harmonic
10682	SRC 5 Ib Harm[14]	%	Source 5 phase B current fourteenth harmonic
10683	SRC 5 Ib Harm[15]	%	Source 5 phase B current fifteenth harmonic
10684	SRC 5 Ib Harm[16]	%	Source 5 phase B current sixteenth harmonic
10685	SRC 5 Ib Harm[17]	%	Source 5 phase B current seventeenth harmonic
10686	SRC 5 Ib Harm[18]	%	Source 5 phase B current eighteenth harmonic
10687	SRC 5 Ib Harm[19]	%	Source 5 phase B current nineteenth harmonic
10688	SRC 5 Ib Harm[20]	%	Source 5 phase B current twentieth harmonic
10689	SRC 5 Ib Harm[21]	%	Source 5 phase B current twenty-first harmonic
10690	SRC 5 Ib Harm[22]	%	Source 5 phase B current twenty-second harmonic
10691	SRC 5 Ib Harm[23]	%	Source 5 phase B current twenty-third harmonic
10692	SRC 5 Ib Harm[24]	%	Source 5 phase B current twenty-fourth harmonic
10693	SRC 5 Ib Harm[25]	%	Source 5 phase B current twenty-fifth harmonic
10702	SRC 5 Ic THD	%	Source 5 phase C current total harmonic distortion
10703	SRC 5 Ic Harm[2]	%	Source 5 phase C current second harmonic
10704	SRC 5 Ic Harm[3]	%	Source 5 phase C current third harmonic
10705	SRC 5 Ic Harm[4]	%	Source 5 phase C current fourth harmonic
10706	SRC 5 Ic Harm[5]	%	Source 5 phase C current fifth harmonic
10707	SRC 5 Ic Harm[6]	%	Source 5 phase C current sixth harmonic
10708	SRC 5 Ic Harm[7]	%	Source 5 phase C current seventh harmonic
10709	SRC 5 Ic Harm[8]	%	Source 5 phase C current eighth harmonic
10710	SRC 5 Ic Harm[9]	%	Source 5 phase C current ninth harmonic
10711	SRC 5 Ic Harm[10]	%	Source 5 phase C current tenth harmonic
10712	SRC 5 Ic Harm[11]	%	Source 5 phase C current eleventh harmonic
10713	SRC 5 Ic Harm[12]	%	Source 5 phase C current twelfth harmonic
10714	SRC 5 Ic Harm[13]	%	Source 5 phase C current thirteenth harmonic
10715	SRC 5 Ic Harm[14]	%	Source 5 phase C current fourteenth harmonic
10716	SRC 5 Ic Harm[15]	%	Source 5 phase C current fifteenth harmonic
10717	SRC 5 Ic Harm[16]	%	Source 5 phase C current sixteenth harmonic
10718	SRC 5 Ic Harm[17]	%	Source 5 phase C current seventeenth harmonic
10719	SRC 5 Ic Harm[18]	%	Source 5 phase C current eighteenth harmonic

Table A–1: FLEXANALOG DATA ITEMS (Sheet 23 of 28)

DECIMAL ADDRESS	FLEXANALOG NAME	UNITS	DESCRIPTION
10720	SRC 5 Ic Harm[19]	%	Source 5 phase C current nineteenth harmonic
10721	SRC 5 Ic Harm[20]	%	Source 5 phase C current twentieth harmonic
10722	SRC 5 Ic Harm[21]	%	Source 5 phase C current twenty-first harmonic
10723	SRC 5 Ic Harm[22]	%	Source 5 phase C current twenty-second harmonic
10724	SRC 5 Ic Harm[23]	%	Source 5 phase C current twenty-third harmonic
10725	SRC 5 Ic Harm[24]	%	Source 5 phase C current twenty-fourth harmonic
10726	SRC 5 Ic Harm[25]	%	Source 5 phase C current twenty-fifth harmonic
10735	SRC 6 Ia THD	%	Source 6 phase A current total harmonic distortion
10736	SRC 6 Ia Harm[2]	%	Source 6 phase A current second harmonic
10737	SRC 6 Ia Harm[3]	%	Source 6 phase A current third harmonic
10738	SRC 6 Ia Harm[4]	%	Source 6 phase A current fourth harmonic
10739	SRC 6 Ia Harm[5]	%	Source 6 phase A current fifth harmonic
10740	SRC 6 Ia Harm[6]	%	Source 6 phase A current sixth harmonic
10741	SRC 6 Ia Harm[7]	%	Source 6 phase A current seventh harmonic
10742	SRC 6 Ia Harm[8]	%	Source 6 phase A current eighth harmonic
10743	SRC 6 Ia Harm[9]	%	Source 6 phase A current ninth harmonic
10744	SRC 6 Ia Harm[10]	%	Source 6 phase A current tenth harmonic
10745	SRC 6 Ia Harm[11]	%	Source 6 phase A current eleventh harmonic
10746	SRC 6 Ia Harm[12]	%	Source 6 phase A current twelfth harmonic
10747	SRC 6 Ia Harm[13]	%	Source 6 phase A current thirteenth harmonic
10748	SRC 6 Ia Harm[14]	%	Source 6 phase A current fourteenth harmonic
10749	SRC 6 Ia Harm[15]	%	Source 6 phase A current fifteenth harmonic
10750	SRC 6 Ia Harm[16]	%	Source 6 phase A current sixteenth harmonic
10751	SRC 6 Ia Harm[17]	%	Source 6 phase A current seventeenth harmonic
10752	SRC 6 Ia Harm[18]	%	Source 6 phase A current eighteenth harmonic
10753	SRC 6 Ia Harm[19]	%	Source 6 phase A current nineteenth harmonic
10754	SRC 6 Ia Harm[20]	%	Source 6 phase A current twentieth harmonic
10755	SRC 6 Ia Harm[21]	%	Source 6 phase A current twenty-first harmonic
10756	SRC 6 Ia Harm[22]	%	Source 6 phase A current twenty-second harmonic
10757	SRC 6 Ia Harm[23]	%	Source 6 phase A current twenty-third harmonic
10758	SRC 6 Ia Harm[24]	%	Source 6 phase A current twenty-fourth harmonic
10759	SRC 6 Ia Harm[25]	%	Source 6 phase A current twenty-fifth harmonic
10768	SRC 6 Ib THD	%	Source 6 phase B current total harmonic distortion
10769	SRC 6 Ib Harm[2]	%	Source 6 phase B current second harmonic
10770	SRC 6 Ib Harm[3]	%	Source 6 phase B current third harmonic
10771	SRC 6 Ib Harm[4]	%	Source 6 phase B current fourth harmonic
10772	SRC 6 Ib Harm[5]	%	Source 6 phase B current fifth harmonic
10773	SRC 6 Ib Harm[6]	%	Source 6 phase B current sixth harmonic
10774	SRC 6 Ib Harm[7]	%	Source 6 phase B current seventh harmonic
10775	SRC 6 Ib Harm[8]	%	Source 6 phase B current eighth harmonic
10776	SRC 6 Ib Harm[9]	%	Source 6 phase B current ninth harmonic
10777	SRC 6 Ib Harm[10]	%	Source 6 phase B current tenth harmonic
10778	SRC 6 Ib Harm[11]	%	Source 6 phase B current eleventh harmonic
10779	SRC 6 Ib Harm[12]	%	Source 6 phase B current twelfth harmonic
10780	SRC 6 Ib Harm[13]	%	Source 6 phase B current thirteenth harmonic
10781	SRC 6 Ib Harm[14]	%	Source 6 phase B current fourteenth harmonic
10782	SRC 6 Ib Harm[15]	%	Source 6 phase B current fifteenth harmonic

Table A–1: FLEXANALOG DATA ITEMS (Sheet 24 of 28)

DECIMAL ADDRESS	FLEXANALOG NAME	UNITS	DESCRIPTION
10783	SRC 6 Ib Harm[16]	%	Source 6 phase B current sixteenth harmonic
10784	SRC 6 Ib Harm[17]	%	Source 6 phase B current seventeenth harmonic
10785	SRC 6 Ib Harm[18]	%	Source 6 phase B current eighteenth harmonic
10786	SRC 6 Ib Harm[19]	%	Source 6 phase B current nineteenth harmonic
10787	SRC 6 Ib Harm[20]	%	Source 6 phase B current twentieth harmonic
10788	SRC 6 Ib Harm[21]	%	Source 6 phase B current twenty-first harmonic
10789	SRC 6 Ib Harm[22]	%	Source 6 phase B current twenty-second harmonic
10790	SRC 6 Ib Harm[23]	%	Source 6 phase B current twenty-third harmonic
10791	SRC 6 Ib Harm[24]	%	Source 6 phase B current twenty-fourth harmonic
10792	SRC 6 Ib Harm[25]	%	Source 6 phase B current twenty-fifth harmonic
10801	SRC 6 Ic THD	%	Source 6 phase C current total harmonic distortion
10802	SRC 6 Ic Harm[2]	%	Source 6 phase C current second harmonic
10803	SRC 6 Ic Harm[3]	%	Source 6 phase C current third harmonic
10804	SRC 6 Ic Harm[4]	%	Source 6 phase C current fourth harmonic
10805	SRC 6 Ic Harm[5]	%	Source 6 phase C current fifth harmonic
10806	SRC 6 Ic Harm[6]	%	Source 6 phase C current sixth harmonic
10807	SRC 6 Ic Harm[7]	%	Source 6 phase C current seventh harmonic
10808	SRC 6 Ic Harm[8]	%	Source 6 phase C current eighth harmonic
10809	SRC 6 Ic Harm[9]	%	Source 6 phase C current ninth harmonic
10810	SRC 6 Ic Harm[10]	%	Source 6 phase C current tenth harmonic
10811	SRC 6 Ic Harm[11]	%	Source 6 phase C current eleventh harmonic
10812	SRC 6 Ic Harm[12]	%	Source 6 phase C current twelfth harmonic
10813	SRC 6 Ic Harm[13]	%	Source 6 phase C current thirteenth harmonic
10814	SRC 6 Ic Harm[14]	%	Source 6 phase C current fourteenth harmonic
10815	SRC 6 Ic Harm[15]	%	Source 6 phase C current fifteenth harmonic
10816	SRC 6 Ic Harm[16]	%	Source 6 phase C current sixteenth harmonic
10817	SRC 6 Ic Harm[17]	%	Source 6 phase C current seventeenth harmonic
10818	SRC 6 Ic Harm[18]	%	Source 6 phase C current eighteenth harmonic
10819	SRC 6 Ic Harm[19]	%	Source 6 phase C current nineteenth harmonic
10820	SRC 6 Ic Harm[20]	%	Source 6 phase C current twentieth harmonic
10821	SRC 6 Ic Harm[21]	%	Source 6 phase C current twenty-first harmonic
10822	SRC 6 Ic Harm[22]	%	Source 6 phase C current twenty-second harmonic
10823	SRC 6 Ic Harm[23]	%	Source 6 phase C current twenty-third harmonic
10824	SRC 6 Ic Harm[24]	%	Source 6 phase C current twenty-fourth harmonic
10825	SRC 6 Ic Harm[25]	%	Source 6 phase C current twenty-fifth harmonic
12306	Oscill Num Triggers	---	Oscillography number of triggers
13504	DCmA Ip 1	mA	DCmA input 1 actual value
13506	DCmA Ip 2	mA	DCmA input 2 actual value
13508	DCmA Ip 3	mA	DCmA input 3 actual value
13510	DCmA Ip 4	mA	DCmA input 4 actual value
13512	DCmA Ip 5	mA	DCmA input 5 actual value
13514	DCmA Ip 6	mA	DCmA input 6 actual value
13516	DCmA Ip 7	mA	DCmA input 7 actual value
13518	DCmA Ip 8	mA	DCmA input 8 actual value
13520	DCmA Ip 9	mA	DCmA input 9 actual value
13522	DCmA Ip 10	mA	DCmA input 10 actual value
13524	DCmA Ip 11	mA	DCmA input 11 actual value

Table A–1: FLEXANALOG DATA ITEMS (Sheet 25 of 28)

DECIMAL ADDRESS	FLEXANALOG NAME	UNITS	DESCRIPTION
13526	DCmA Ip 12	mA	DCmA input 12 actual value
13528	DCmA Ip 13	mA	DCmA input 13 actual value
13530	DCmA Ip 14	mA	DCmA input 14 actual value
13532	DCmA Ip 15	mA	DCmA input 15 actual value
13534	DCmA Ip 16	mA	DCmA input 16 actual value
13536	DCmA Ip 17	mA	DCmA input 17 actual value
13538	DCmA Ip 18	mA	DCmA input 18 actual value
13540	DCmA Ip 19	mA	DCmA input 19 actual value
13542	DCmA Ip 20	mA	DCmA input 20 actual value
13544	DCmA Ip 21	mA	DCmA input 21 actual value
13546	DCmA Ip 22	mA	DCmA input 22 actual value
13548	DCmA Ip 23	mA	DCmA input 23 actual value
13550	DCmA Ip 24	mA	DCmA input 24 actual value
13552	RTD Ip 1	---	RTD input 1 actual value
13553	RTD Ip 2	---	RTD input 2 actual value
13554	RTD Ip 3	---	RTD input 3 actual value
13555	RTD Ip 4	---	RTD input 4 actual value
13556	RTD Ip 5	---	RTD input 5 actual value
13557	RTD Ip 6	---	RTD input 6 actual value
13558	RTD Ip 7	---	RTD input 7 actual value
13559	RTD Ip 8	---	RTD input 8 actual value
13560	RTD Ip 9	---	RTD input 9 actual value
13561	RTD Ip 10	---	RTD input 10 actual value
13562	RTD Ip 11	---	RTD input 11 actual value
13563	RTD Ip 12	---	RTD input 12 actual value
13564	RTD Ip 13	---	RTD input 13 actual value
13565	RTD Ip 14	---	RTD input 14 actual value
13566	RTD Ip 15	---	RTD input 15 actual value
13567	RTD Ip 16	---	RTD input 16 actual value
13568	RTD Ip 17	---	RTD input 17 actual value
13569	RTD Ip 18	---	RTD input 18 actual value
13570	RTD Ip 19	---	RTD input 19 actual value
13571	RTD Ip 20	---	RTD input 20 actual value
13572	RTD Ip 21	---	RTD input 21 actual value
13573	RTD Ip 22	---	RTD input 22 actual value
13574	RTD Ip 23	---	RTD input 23 actual value
13575	RTD Ip 24	---	RTD input 24 actual value
13576	RTD Ip 25	---	RTD input 25 actual value
13577	RTD Ip 26	---	RTD input 26 actual value
13578	RTD Ip 27	---	RTD input 27 actual value
13579	RTD Ip 28	---	RTD input 28 actual value
13580	RTD Ip 29	---	RTD input 29 actual value
13581	RTD Ip 30	---	RTD input 30 actual value
13582	RTD Ip 31	---	RTD input 31 actual value
13583	RTD Ip 32	---	RTD input 32 actual value
13584	RTD Ip 33	---	RTD input 33 actual value
13585	RTD Ip 34	---	RTD input 34 actual value

A

Table A–1: FLEXANALOG DATA ITEMS (Sheet 26 of 28)

DECIMAL ADDRESS	FLEXANALOG NAME	UNITS	DESCRIPTION
13586	RTD Ip 35	---	RTD input 35 actual value
13587	RTD Ip 36	---	RTD input 36 actual value
13588	RTD Ip 37	---	RTD input 37 actual value
13589	RTD Ip 38	---	RTD input 38 actual value
13590	RTD Ip 39	---	RTD input 39 actual value
13591	RTD Ip 40	---	RTD input 40 actual value
13592	RTD Ip 41	---	RTD input 41 actual value
13593	RTD Ip 42	---	RTD input 42 actual value
13594	RTD Ip 43	---	RTD input 43 actual value
13595	RTD Ip 44	---	RTD input 44 actual value
13596	RTD Ip 45	---	RTD input 45 actual value
13597	RTD Ip 46	---	RTD input 46 actual value
13598	RTD Ip 47	---	RTD input 47 actual value
13599	RTD Ip 48	---	RTD input 48 actual value
13600	Ohm Inputs 1 Value	Ohms	Ohm inputs 1 value
13601	Ohm Inputs 2 Value	Ohms	Ohm inputs 2 value
14189	PTP–IRIG-B Delta	ns	PTP time minus IRIG-B time
24432	Communications Group	---	Groups communications group
24447	Active Setting Group	---	Current setting group
26176	Field Ground Resist	Ohms	Field ground resistance
26178	Field Ground Current	Volts	Field ground current
26179	Injected Voltage	Volts	Field ground injected voltage
26180	Fault Location	---	Field ground fault location
26181	Field Voltage	Volts	Field ground field voltage
26182	Field Current	Volts	Field ground field current
32448	Dist Zab Mag	Ohms	Distance Zab magnitude
32449	Dist Zab Angle	Degrees	Distance Zab angle
32450	Dist Zbc Mag	Ohms	Distance Zbc magnitude
32451	Dist Zbc Angle	Degrees	Distance Zbc angle
32452	Dist Zca Mag	Ohms	Distance Zca magnitude
32453	Dist Zca Angle	Degrees	Distance Zca angle
32454	Dist Zag Mag	Ohms	Distance Zag magnitude
32455	Dist Zag Angle	Degrees	Distance Zag angle
32456	Dist Zbg Mag	Ohms	Distance Zbg magnitude
32457	Dist Zbg Angle	Degrees	Distance Zbg angle
32458	Dist Zcg Mag	Ohms	Distance Zcg magnitude
32459	Dist Zcg Angle	Degrees	Distance Zcg angle
32768	Tracking Frequency	Hz	Tracking frequency
34752	RRTD 1 Value	°C	Remote RTD input 1 actual value
34753	RRTD 2 Value	°C	Remote RTD input 2 actual value
34754	RRTD 3 Value	°C	Remote RTD input 3 actual value
34755	RRTD 4 Value	°C	Remote RTD input 4 actual value
34756	RRTD 5 Value	°C	Remote RTD input 5 actual value
34757	RRTD 6 Value	°C	Remote RTD input 6 actual value
34758	RRTD 7 Value	°C	Remote RTD input 7 actual value
34759	RRTD 8 Value	°C	Remote RTD input 8 actual value
34760	RRTD 9 Value	°C	Remote RTD input 9 actual value

Table A–1: FLEXANALOG DATA ITEMS (Sheet 27 of 28)

DECIMAL ADDRESS	FLEXANALOG NAME	UNITS	DESCRIPTION
34761	RRTD 10 Value	°C	Remote RTD input 10 actual value
34762	RRTD 11 Value	°C	Remote RTD input 11 actual value
34763	RRTD 12 Value	°C	Remote RTD input 12 actual value
39168	FlexElement 1 Value	---	FlexElement 1 actual value
39170	FlexElement 2 Value	---	FlexElement 2 actual value
39172	FlexElement 3 Value	---	FlexElement 3 actual value
39174	FlexElement 4 Value	---	FlexElement 4 actual value
39176	FlexElement 5 Value	---	FlexElement 5 actual value
39178	FlexElement 6 Value	---	FlexElement 6 actual value
39180	FlexElement 7 Value	---	FlexElement 7 actual value
39182	FlexElement 8 Value	---	FlexElement 8 actual value
39184	FlexElement 9 Value	---	FlexElement 9 actual value
39186	FlexElement 10 Value	---	FlexElement 10 actual value
39188	FlexElement 11 Value	---	FlexElemen 11 actual value
39190	FlexElement 12 Value	---	FlexElement 12 actual value
39192	FlexElement 13 Value	---	FlexElement 13 actual value
39194	FlexElement 14 Value	---	FlexElement 14 actual value
39196	FlexElement 15 Value	---	FlexElement 15 actual value
39198	FlexElement 16 Value	---	FlexElement 16 actual value
41132	V0 3rd Harmonic 1	Volts	VTFF 1 V0 3rd Harmonic
41134	V0 3rd Harmonic 2	Volts	VTFF 2 V0 3rd Harmonic
41136	V0 3rd Harmonic 3	Volts	VTFF 3 V0 3rd Harmonic
41138	V0 3rd Harmonic 4	Volts	VTFF 4 V0 3rd Harmonic
42400	Volts Per Hertz 1	pu	Volts per hertz 1 actual value
42401	Volts Per Hertz 2	pu	Volts per hertz 2 actual value
45584	GOOSE Analog In 1	---	IEC 61850 GOOSE analog input 1
45586	GOOSE Analog In 2	---	IEC 61850 GOOSE analog input 2
45588	GOOSE Analog In 3	---	IEC 61850 GOOSE analog input 3
45590	GOOSE Analog In 4	---	IEC 61850 GOOSE analog input 4
45592	GOOSE Analog In 5	---	IEC 61850 GOOSE analog input 5
45594	GOOSE Analog In 6	---	IEC 61850 GOOSE analog input 6
45596	GOOSE Analog In 7	---	IEC 61850 GOOSE analog input 7
45598	GOOSE Analog In 8	---	IEC 61850 GOOSE analog input 8
45600	GOOSE Analog In 9	---	IEC 61850 GOOSE analog input 9
45602	GOOSE Analog In 10	---	IEC 61850 GOOSE analog input 10
45604	GOOSE Analog In 11	---	IEC 61850 GOOSE analog input 11
45606	GOOSE Analog In 12	---	IEC 61850 GOOSE analog input 12
45608	GOOSE Analog In 13	---	IEC 61850 GOOSE analog input 13
45610	GOOSE Analog In 14	---	IEC 61850 GOOSE analog input 14
45612	GOOSE Analog In 15	---	IEC 61850 GOOSE analog input 15
45614	GOOSE Analog In 16	---	IEC 61850 GOOSE analog input 16
45616	GOOSE Analog In 17	---	IEC 61850 GOOSE analog input 17
45618	GOOSE Analog In 18	---	IEC 61850 GOOSE analog input 18
45620	GOOSE Analog In 19	---	IEC 61850 GOOSE analog input 19
45622	GOOSE Analog In 20	---	IEC 61850 GOOSE analog input 20
45624	GOOSE Analog In 21	---	IEC 61850 GOOSE analog input 21
45626	GOOSE Analog In 22	---	IEC 61850 GOOSE analog input 22

Table A–1: FLEXANALOG DATA ITEMS (Sheet 28 of 28)

DECIMAL ADDRESS	FLEXANALOG NAME	UNITS	DESCRIPTION
45628	GOOSE Analog In 23	---	IEC 61850 GOOSE analog input 23
45630	GOOSE Analog In 24	---	IEC 61850 GOOSE analog input 24
45632	GOOSE Analog In 25	---	IEC 61850 GOOSE analog input 25
45634	GOOSE Analog In 26	---	IEC 61850 GOOSE analog input 26
45636	GOOSE Analog In 27	---	IEC 61850 GOOSE analog input 27
45638	GOOSE Analog In 28	---	IEC 61850 GOOSE analog input 28
45640	GOOSE Analog In 29	---	IEC 61850 GOOSE analog input 29
45642	GOOSE Analog In 30	---	IEC 61850 GOOSE analog input 30
45644	GOOSE Analog In 31	---	IEC 61850 GOOSE analog input 31
45646	GOOSE Analog In 32	---	IEC 61850 GOOSE analog input 32
61439	PMU Num Triggers	---	Phasor measurement unit recording number of triggers

FlexInteger items are also viewable in a web browser. In the browser, enter the IP address of the UR, access the **Device Information Menu** option, then the **FlexInteger Parameter Listing** option.

Table A–2: FLEXINTEGER DATA ITEMS

ADDRESS	FLEXINTEGER NAME	UNITS	DESCRIPTION
9881	PMU 1 SOC	seconds	PMU 1 SOC timestamps
9883	PMU 1 FRACSEC	seconds	PMU 1 FRACSEC timestamps
9885	PMU 1 STAT	---	PMU 1 STAT flags
9968	GOOSE UInt Input 1	---	IEC61850 GOOSE UInteger input 1
9970	GOOSE UInt Input 2	---	IEC61850 GOOSE UInteger input 2
9972	GOOSE UInt Input 3	---	IEC61850 GOOSE UInteger input 3
9974	GOOSE UInt Input 4	---	IEC61850 GOOSE UInteger input 4
9976	GOOSE UInt Input 5	---	IEC61850 GOOSE UInteger input 5
9978	GOOSE UInt Input 6	---	IEC61850 GOOSE UInteger input 6
9980	GOOSE UInt Input 7	---	IEC61850 GOOSE UInteger input 7
9982	GOOSE UInt Input 8	---	IEC61850 GOOSE UInteger input 8
9984	GOOSE UInt Input 9	---	IEC61850 GOOSE UInteger input 9
9986	GOOSE UInt Input 10	---	IEC61850 GOOSE UInteger input 10
9988	GOOSE UInt Input 11	---	IEC61850 GOOSE UInteger input 11
9990	GOOSE UInt Input 12	---	IEC61850 GOOSE UInteger input 12
9992	GOOSE UInt Input 13	---	IEC61850 GOOSE UInteger input 13
9994	GOOSE UInt Input 14	---	IEC61850 GOOSE UInteger input 14
9996	GOOSE UInt Input 15	---	IEC61850 GOOSE UInteger input 15
9998	GOOSE UInt Input 16	---	IEC61850 GOOSE UInteger input 16

A

B.1.1 INTRODUCTION

The UR series supports several communications protocols to allow connection to equipment such as personal computers, remote terminal units (RTUs), supervisory control and data acquisition (SCADA) masters, and programmable logic controllers. The Modicon Modbus protocol is the most basic protocol supported by the UR. Modbus RTU is available via the RS232 and RS485 serial links, and Modbus TCP/IP is available over Ethernet. The following description is intended primarily for users who want to develop their own master communication drivers. Note that:

- The UR always acts as a slave device, meaning that it never initiates communications. It listens and responds to requests issued by a master computer.
- A subset of Modbus RTU and Modbus TCP/IP protocol format is supported that allows extensive monitoring, programming, and control functions using read and write register commands.

B.1.2 PHYSICAL LAYER

Each data byte is transmitted in an asynchronous format consisting of 1 start bit, 8 data bits, 1 stop bit, and possibly 1 parity bit. This produces a 10 or 11 bit data frame. This can be important for transmission through modems at high bit rates (11 bit data frames are not supported by many modems at baud rates greater than 300).

The faceplate RS232 port is intended for local use and is fixed at 19200 bit/s baud and even parity. The rear terminal RS485 port can be set for baud rates of 300, 1200, 2400, 4800, 9600, 14400, 19200, 28800, 33600, 38400, 57600, or 115200 bps, and even, odd, and no parity options are available. See the Communications section of chapter 5 for details.

The Modbus TCP/IP protocol is available on each of the rear Ethernet ports. These ports are 100Base-FX.

B.1.3 DATA LINK LAYER

Modbus RTU communications takes place in packets that are groups of asynchronously framed byte data. The master transmits a packet to the slave and the slave responds with a packet. The following information describes the general format for both transmit and receive packets. For details on packet formatting, see subsequent sections describing each function code.

Table B–1: MODBUS RTU PACKET FORMAT

DESCRIPTION	SIZE
SLAVE ADDRESS	1 byte
FUNCTION CODE	1 byte
DATA	N bytes
CRC	2 bytes
DEAD TIME	3.5 bytes transmission time

- **SLAVE ADDRESS:** This is the address of the slave device that is intended to receive the packet sent by the master and to perform the desired action. Each slave device on a communications bus must have a unique address to prevent bus contention. All of the relay's ports have the same address which is programmable from 1 to 254; see chapter 5 for details. Only the addressed slave will respond to a packet that starts with its address. Note that the faceplate port is an exception to this rule; it will act on a message containing any slave address.

  A master transmit packet with slave address 0 indicates a broadcast command. All slaves on the communication link take action based on the packet, but none respond to the master.
- **FUNCTION CODE:** This is one of the supported functions codes of the unit which tells the slave what action to perform. See the Supported Function Codes section for details. An exception response from the slave is indicated by setting the high order bit of the function code in the response packet. See the Exception Responses section for details.
- **DATA:** This will be a variable number of bytes depending on the function code. This may include actual values, settings, or addresses sent by the master to the slave or by the slave to the master.
- **CRC:** This is a two byte error checking code. The RTU version of Modbus includes a 16-bit cyclic redundancy check (CRC-16) with every packet which is an industry standard method used for error detection. If a Modbus slave device receives a packet in which an error is indicated by the CRC, the slave device does not act upon or respond to the

packet thus preventing any erroneous operations. See the CRC-16 Algorithm section for details on calculating the CRC.

- **DEAD TIME:** A packet is terminated when no data is received for a period of 3.5 byte transmission times (about 15 ms at 2400 bps, 2 ms at 19200 bps, and 300 µs at 115200 bps). Consequently, the transmitting device must not allow gaps between bytes longer than this interval. Once the dead time has expired without a new byte transmission, all slaves start listening for a new packet from the master except for the addressed slave.

Modbus-TCP/IP communications takes place in application data units (ADUs), which are wrapped in the TCP/IP/Ethernet protocols. Ethernet provides Layer 2 addressing and CRC-32 error checking. IP provides Layer 3 addressing. TCP provides communication establishment and ending and manages data flow. The Parallel Redundancy Protocol (PRP) can also be used to provide seamless data flow in case of a single failure in the network, by using a combination of LAN duplication and frame duplication. See chapter 5 in the instruction manual for information on setting up TCP for Modbus (in the Modbus section), IP and PRP (Network section).

The ADU is described as follows.

Table B–2: MODBUS TCP/IP FORMAT

DESCRIPTION		SIZE
MBAP header	Transaction identifier	2 bytes
	Protocol identifier	2 bytes
	Length	2 bytes
	Unit identifier	1 byte
FUNCTION CODE		1 byte
DATA		N bytes

MBAP header: This Modbus Application Protocol header contains the following fields:

- Transaction Identifier: Used for transaction pairing. The Modbus server copies in the response the transaction identifier of the request.
- Protocol Identifier: Used for intra-system multiplexing. The Modbus protocol is identified by the value 0.
- Length: The length field is a byte count of the following fields, including the Unit Identifier and data fields.
  - Unit Identifier: For the purposes of the UR, this field is equivalent to the Modbus RTU SLAVE ADDRESS field. The client must use the same value here as programmed in the UR setting **MODBUS SLAVE ADDRESS**.

FUNCTION CODE: This is the same as the Modbus RTU function code field described above.

DATA: This is the same as the Modbus RTU data field described above.

B.1.4 MODBUS RTU CRC-16 ALGORITHM

The Modbus TPC/IP CRC-32 algorithm is universally executed in hardware, so there is no need to describe it here.

The Modbus RTU CRC-16 algorithm essentially treats the entire data stream (data bits only; start, stop and parity ignored) as one continuous binary number. This number is first shifted left 16 bits and then divided by a characteristic polynomial (1100000000000101b). The 16-bit remainder of the division is appended to the end of the packet, MSByte first. The resulting packet including CRC, when divided by the same polynomial at the receiver will give a zero remainder if no transmission errors have occurred. This algorithm requires the characteristic polynomial to be reverse bit ordered. The most significant bit of the characteristic polynomial is dropped, since it does not affect the value of the remainder.

A C programming language implementation of the CRC algorithm will be provided upon request.

Table B–3: MODBUS RTU CRC-16 ALGORITHM

SYMBOLS:	-->	data transfer
	A	16 bit working register
	Alow	low order byte of A
	Ahigh	high order byte of A
	CRC	16 bit CRC-16 result
	i,j	loop counters
	(+)	logical EXCLUSIVE-OR operator
	N	total number of data bytes
	Di	i-th data byte (i = 0 to N-1)
	G	16 bit characteristic polynomial = 1010000000000001 (binary) with MSbit dropped and bit order reversed
	shr (x)	right shift operator (th LSbit of x is shifted into a carry flag, a '0' is shifted into the MSbit of x, all other bits are shifted right one location)

ALGORITHM:	1.	FFFF (hex) --> A	
	2.	0 --> i	
	3.	0 --> j	
	4.	Di (+) Alow --> Alow	
	5.	j + 1 --> j	
	6.	shr (A)	
	7.	Is there a carry?	No: go to 8; Yes: G (+) A --> A and continue.
	8.	Is j = 8?	No: go to 5; Yes: continue
	9.	i + 1 --> i	
	10.	Is i = N?	No: go to 3; Yes: continue
	11.	A --> CRC	

B.2.1 SUPPORTED FUNCTION CODES

Modbus officially defines function codes from 1 to 127 though only a small subset is generally needed. The relay supports some of these functions, as summarized in the following table. Subsequent sections describe each function code in detail.

FUNCTION CODE		MODBUS DEFINITION	GE MULTILIN DEFINITION
HEX	DEC		
03	3	Read holding registers	Read actual values or settings
04	4	Read holding registers	Read actual values or settings
05	5	Force single coil	Execute operation
06	6	Preset single register	Store single setting
10	16	Preset multiple registers	Store multiple settings

B.2.2 READ ACTUAL VALUES OR SETTINGS (FUNCTION CODE 03/04H)

This function code allows the master to read one or more consecutive data registers (actual values or settings) from a relay. The maximum number of registers that can be read in a single packet is 125. See the Modbus Memory Map table for exact details on the data registers.

Since some PLC implementations of Modbus only support one of function codes 03h and 04h. The UR interpretation allows either function code to be used for reading one or more consecutive data registers. The data starting address will determine the type of data being read. Function codes 03h and 04h are therefore identical.

The following table shows the format of the master and slave packets in Modbus RTU. Modbus TCP/IP ADUs have a MBAP instead of slave address, and CRC is in another stack layer. The example shows a master device requesting three register values starting at address 4050h from slave device 11h (17 decimal); the slave device responds with the values 40, 300, and 0 from registers 4050h, 4051h, and 4052h, respectively.

Table B–4: MASTER AND SLAVE DEVICE PACKET TRANSMISSION EXAMPLE

MASTER TRANSMISSION	
PACKET FORMAT	EXAMPLE (HEX)
SLAVE ADDRESS	11
FUNCTION CODE	04
DATA STARTING ADDRESS - high	40
DATA STARTING ADDRESS - low	50
NUMBER OF REGISTERS - high	00
NUMBER OF REGISTERS - low	03
CRC - low	A7
CRC - high	4A

SLAVE RESPONSE	
PACKET FORMAT	EXAMPLE (HEX)
SLAVE ADDRESS	11
FUNCTION CODE	04
BYTE COUNT	06
DATA #1 - high	00
DATA #1 - low	28
DATA #2 - high	01
DATA #2 - low	2C
DATA #3 - high	00
DATA #3 - low	00
CRC - low	0D
CRC - high	60

B.2.3 EXECUTE OPERATION (FUNCTION CODE 05H)

This function code allows the master to perform various operations in the relay. Available operations are shown in the Summary of Operation Codes table below.

The following table shows the format of the master and slave packets in Modbus RTU. Modbus TCP/IP ADUs have a MBAP instead of slave address, and CRC is in another stack layer. The example shows a master device requesting the slave device 11h (17 decimal) to perform a reset. The high and low code value bytes always have the values "FF" and "00" respectively and are a remnant of the original Modbus definition of this function code.

Table B–5: MASTER AND SLAVE DEVICE PACKET TRANSMISSION EXAMPLE

MASTER TRANSMISSION	
PACKET FORMAT	**EXAMPLE (HEX)**
SLAVE ADDRESS	11
FUNCTION CODE	05
OPERATION CODE - high	00
OPERATION CODE - low	01
CODE VALUE - high	FF
CODE VALUE - low	00
CRC - low	DF
CRC - high	6A

SLAVE RESPONSE	
PACKET FORMAT	**EXAMPLE (HEX)**
SLAVE ADDRESS	11
FUNCTION CODE	05
OPERATION CODE - high	00
OPERATION CODE - low	01
CODE VALUE - high	FF
CODE VALUE - low	00
CRC - low	DF
CRC - high	6A

Table B–6: SUMMARY OF OPERATION CODES FOR FUNCTION 05H

OPERATION CODE (HEX)	DEFINITION	DESCRIPTION
0000	NO OPERATION	Does not do anything.
0001	RESET	Performs the same function as the faceplate RESET key.
0005	CLEAR EVENT RECORDS	Performs the same function as the faceplate **CLEAR EVENT RECORDS** menu command.
0006	CLEAR OSCILLOGRAPHY	Clears all oscillography records.
1000 to 103F	VIRTUAL IN 1 to 64 ON/OFF	Sets the states of Virtual Inputs 1 to 64 either "ON" or "OFF".

B.2.4 STORE SINGLE SETTING (FUNCTION CODE 06H)

This function code allows the master to modify the contents of a single setting register in an relay. Setting registers are always 16 bit (two byte) values transmitted high order byte first. The following table shows the format of the master and slave packets in Modbus RTU. Modbus TCP/IP ADUs have a MBAP instead of slave address, and CRC is in another stack layer. The example shows a master device storing the value 200 at memory map address 4051h to slave device 11h (17 dec).

Table B–7: MASTER AND SLAVE DEVICE PACKET TRANSMISSION EXAMPLE

MASTER TRANSMISSION	
PACKET FORMAT	**EXAMPLE (HEX)**
SLAVE ADDRESS	11
FUNCTION CODE	06
DATA STARTING ADDRESS - high	40
DATA STARTING ADDRESS - low	51
DATA - high	00
DATA - low	C8
CRC - low	CE
CRC - high	DD

SLAVE RESPONSE	
PACKET FORMAT	**EXAMPLE (HEX)**
SLAVE ADDRESS	11
FUNCTION CODE	06
DATA STARTING ADDRESS - high	40
DATA STARTING ADDRESS - low	51
DATA - high	00
DATA - low	C8
CRC - low	CE
CRC - high	DD

B.2.5 STORE MULTIPLE SETTINGS (FUNCTION CODE 10H)

This function code allows the master to modify the contents of a one or more consecutive setting registers in a relay. Setting registers are 16-bit (two byte) values transmitted high order byte first. The maximum number of setting registers that can be stored in a single packet is 123. The following table shows the format of the master and slave packets in Modbus RTU. Modbus TCP/IP ADUs have a MBAP instead of slave address, and CRC is in another stack layer. The example shows a master device storing the value 200 at memory map address 4051h, and the value 1 at memory map address 4052h to slave device 11h (17 decimal).

Table B–8: MASTER AND SLAVE DEVICE PACKET TRANSMISSION EXAMPLE

MASTER TRANSMISSION	
PACKET FORMAT	**EXAMPLE (HEX)**
SLAVE ADDRESS	11
FUNCTION CODE	10
DATA STARTING ADDRESS - hi	40
DATA STARTING ADDRESS - lo	51
NUMBER OF SETTINGS - hi	00
NUMBER OF SETTINGS - lo	02
BYTE COUNT	04
DATA #1 - high order byte	00
DATA #1 - low order byte	C8
DATA #2 - high order byte	00
DATA #2 - low order byte	01
CRC - low order byte	12
CRC - high order byte	62

SLAVE RESPONSE	
PACKET FORMAT	**EXAMPLE (HEX)**
SLAVE ADDRESS	11
FUNCTION CODE	10
DATA STARTING ADDRESS - hi	40
DATA STARTING ADDRESS - lo	51
NUMBER OF SETTINGS - hi	00
NUMBER OF SETTINGS - lo	02
CRC - lo	07
CRC - hi	64

B.2.6 EXCEPTION RESPONSES

Programming or operation errors usually happen because of illegal data in a packet. These errors result in an exception response from the slave. The slave detecting one of these errors sends a response packet to the master with the high order bit of the function code set to 1.

The following table shows the format of the master and slave packets in Modbus RTU. Modbus TCP/IP ADUs have a MBAP instead of slave address, and CRC is in another stack layer. The example shows a master device sending the unsupported function code 39h to slave device 11h.

Table B–9: MASTER AND SLAVE DEVICE PACKET TRANSMISSION EXAMPLE

MASTER TRANSMISSION	
PACKET FORMAT	**EXAMPLE (HEX)**
SLAVE ADDRESS	11
FUNCTION CODE	39
CRC - low order byte	CD
CRC - high order byte	F2

SLAVE RESPONSE	
PACKET FORMAT	**EXAMPLE (HEX)**
SLAVE ADDRESS	11
FUNCTION CODE	B9
ERROR CODE	01
CRC - low order byte	93
CRC - high order byte	95

a) DESCRIPTION

The UR relay has a generic file transfer facility, meaning that you use the same method to obtain all of the different types of files from the unit. The Modbus registers that implement file transfer are found in the "Modbus File Transfer (Read/Write)" and "Modbus File Transfer (Read Only)" modules, starting at address 3100h in the Modbus Memory Map. To read a file from the UR relay, use the following steps:

1. Write the filename to the "Name of file to read" register using a write multiple registers command. If the name is shorter than 80 characters, you may write only enough registers to include all the text of the filename. Filenames are not case sensitive.
2. Repeatedly read all the registers in "Modbus File Transfer (Read Only)" using a read multiple registers command. It is not necessary to read the entire data block, since the UR relay will remember which was the last register you read. The "position" register is initially zero and thereafter indicates how many bytes (2 times the number of registers) you have read so far. The "size of..." register indicates the number of bytes of data remaining to read, to a maximum of 244.
3. Keep reading until the "size of..." register is smaller than the number of bytes you are transferring. This condition indicates end of file. Discard any bytes you have read beyond the indicated block size.
4. If you need to re-try a block, read only the "size of.." and "block of data", without reading the position. The file pointer is only incremented when you read the position register, so the same data block will be returned as was read in the previous operation. On the next read, check to see if the position is where you expect it to be, and discard the previous block if it is not (this condition would indicate that the UR relay did not process your original read request).

The UR relay retains connection-specific file transfer information, so files may be read simultaneously on multiple Modbus connections.

b) OTHER PROTOCOLS

All the files available via Modbus may also be retrieved using the standard file transfer mechanisms in other protocols (for example, TFTP or MMS).

c) COMTRADE, OSCILLOGRAPHY, AND DATA LOGGER FILES

Oscillography and data logger files are formatted using the COMTRADE file format per IEEE C37.111-1999 Standard Common Format for Transient Data Exchange (COMTRADE) for Power Systems. The files can be obtained in either text or binary COMTRADE format.

d) READING OSCILLOGRAPHY FILES

Familiarity with the oscillography feature is required to understand the following description. See the *Oscillography* section in chapter 5 for details.

The "Oscillography Number of Triggers" register increments by one every time a new oscillography file is triggered (captured) and cleared to zero when oscillography data is cleared. When a new trigger occurs, the associated oscillography file is assigned a file identifier number equal to the incremented value of this register; the newest file number is equal to the "Oscillography Number of Triggers" register. This register can be used to determine if any new data has been captured by periodically reading it to see if the value has changed; if the number has increased then new data is available.

The "Oscillography Number of Records" register specifies the maximum number of files (and the number of cycles of data per file) that can be stored in memory of the relay. The "Oscillography Available Records" register specifies the actual number of files that are stored and still available to be read out of the relay.

Writing “Yes” (that is, the value 1) to the "Oscillography Clear Data" register clears oscillography data files, clears both the "Oscillography Number of Triggers" and "Oscillography Available Records" registers to zero, and sets the "Oscillography Last Cleared Date" to the present date and time.

To read binary COMTRADE oscillography files, read the following filenames:

`OSCnnnn.CFG` and `OSCnnn.DAT`

Replace “nnn” with the desired oscillography trigger number. For ASCII format, use the following file names

`OSCAnnnn.CFG` and `OSCAnnn.DAT`

e) READING DATA LOGGER FILES

Familiarity with the data logger feature is required to understand this description. Refer to the Data Logger section of Chapter 5 for details. To read the entire data logger in binary COMTRADE format, read the following files.

`datalog.cfg` and `datalog.dat`

To read the entire data logger in ASCII COMTRADE format, read the following files.

`dataloga.cfg` and `dataloga.dat`

To limit the range of records to be returned in the COMTRADE files, append the following to the filename before writing it:

- To read from a specific time to the end of the log: <space> startTime
- To read a specific range of records: <space> startTime <space> endTime
- Replace <startTime> and <endTime> with the number of seconds since Jan. 1 1970 as numeric text

f) READING EVENT RECORDER FILES

To read the entire event recorder contents in ASCII format (the only available format), use the following filename:

`EVT.TXT`

To read from a specific record to the end of the log, use the following filename:

`EVTnnn.TXT` (replace `nnn` with the desired starting record number)

To read from a specific record to another specific record, use the following filename:

`EVT.TXT xxxxx yyyyy` (replace `xxxxx` with the starting record number and `yyyyy` with the ending record number)

The table provides the Modbus memory map. The addresses in the table are expressed in hexadecimal. The particular registers actually present depend on the UR product and on the order codes software and module options.

The map is also viewable in a web browser. In the browser, enter the IP address of the UR and click the option.

In the table, "Grouped Setting" refers to content in the **Settings > Grouped Elements > Group** menus.

The data format tables that follow the memory map provide more information for some entries.

Table B–10: MODBUS MEMORY MAP (Sheet 1 of 72)

ADDR	REGISTER NAME	RANGE	UNITS	STEP	FORMAT	DEFAULT
Product Information (Read Only)						
0000	UR Product Type	0 to 65535	---	1	F001	0
0002	Product Version	0 to 655.35	---	0.01	F001	1
0003	Boot Configuration Register	0 to 65535	---	1	F001	0
Product Information (Read Only -- Written by Factory)						
0010	Serial Number	---	---	---	F203	“0”
0020	Manufacturing Date	0 to 4294967295	---	1	F050	0
0022	Modification Number	0 to 65535	---	1	F001	0
0040	Order Code	---	---	---	F204	“Order Code x”
0090	Ethernet MAC Address	---	---	---	F072	0
0093	Reserved (13 items)	---	---	---	F001	0
00A0	CPU Module Serial Number	---	---	---	F203	(none)
00B0	CPU Supplier Serial Number	---	---	---	F203	(none)
00C0	Ethernet Sub Module Serial Number (8 items)	---	---	---	F203	(none)
Product Information (Read Only)						
0100	GPM-F Version	0 to 655.35	---	0.01	F001	0
0101	GPM-F Compile Date	0 to 4294967295	---	1	F050	0
0103	GPM-F Order Code	---	---	---	F205	(none)
0109	GPM-F Serial Number	---	---	---	F205	(none)
010F	GPM-F Hardware Revision	0 to 65535	---	1	F001	0
Product Information (Read Only -- Written by Factory)						
0110	FPGA Version	---	---	---	F206	(none)
0113	FPGA Date	0 to 4294967295	--	1	F050	0
Product Information (Read/Write)						
0120	Undefined	0 to 1	---	1	F102	0
Self Test Targets (Read Only)						
0200	Self Test States (4 items)	0 to 4294967295	0	1	F143	0
Front Panel (Read Only)						
0208	LED Column *n* State, *n* = 1 to 10 (10 items)	0 to 65535	---	1	F501	0
0220	Display Message	---	---	---	F204	(none)
0248	Last Key Pressed	0 to 47	---	1	F530	0 (None)
Keypress Emulation (Read/Write)						
0280	Simulated keypress -- write zero before each keystroke	0 to 46	---	1	F190	0 (No key -- use between real keys)
Virtual Input Commands (Read/Write Command) (64 modules)						
0400	Virtual Input 1 State	0 to 1	---	1	F108	0 (Off)
0401	Virtual Input 2 State	0 to 1	---	1	F108	0 (Off)
0402	Virtual Input 3 State	0 to 1	---	1	F108	0 (Off)
0403	Virtual Input 4 State	0 to 1	---	1	F108	0 (Off)
0404	Virtual Input 5 State	0 to 1	---	1	F108	0 (Off)
0405	Virtual Input 6 State	0 to 1	---	1	F108	0 (Off)
0406	Virtual Input 7 State	0 to 1	---	1	F108	0 (Off)
0407	Virtual Input 8 State	0 to 1	---	1	F108	0 (Off)
0408	Virtual Input 9 State	0 to 1	---	1	F108	0 (Off)

Table B–10: MODBUS MEMORY MAP (Sheet 2 of 72)

ADDR	REGISTER NAME	RANGE	UNITS	STEP	FORMAT	DEFAULT
0409	Virtual Input 10 State	0 to 1	---	1	F108	0 (Off)
040A	Virtual Input 11 State	0 to 1	---	1	F108	0 (Off)
040B	Virtual Input 12 State	0 to 1	---	1	F108	0 (Off)
040C	Virtual Input 13 State	0 to 1	---	1	F108	0 (Off)
040D	Virtual Input 14 State	0 to 1	---	1	F108	0 (Off)
040E	Virtual Input 15 State	0 to 1	---	1	F108	0 (Off)
040F	Virtual Input 16 State	0 to 1	---	1	F108	0 (Off)
0410	Virtual Input 17 State	0 to 1	---	1	F108	0 (Off)
0411	Virtual Input 18 State	0 to 1	---	1	F108	0 (Off)
0412	Virtual Input 19 State	0 to 1	---	1	F108	0 (Off)
0413	Virtual Input 20 State	0 to 1	---	1	F108	0 (Off)
0414	Virtual Input 21 State	0 to 1	---	1	F108	0 (Off)
0415	Virtual Input 22 State	0 to 1	---	1	F108	0 (Off)
0416	Virtual Input 23 State	0 to 1	---	1	F108	0 (Off)
0417	Virtual Input 24 State	0 to 1	---	1	F108	0 (Off)
0418	Virtual Input 25 State	0 to 1	---	1	F108	0 (Off)
0419	Virtual Input 26 State	0 to 1	---	1	F108	0 (Off)
041A	Virtual Input 27 State	0 to 1	---	1	F108	0 (Off)
041B	Virtual Input 28 State	0 to 1	---	1	F108	0 (Off)
041C	Virtual Input 29 State	0 to 1	---	1	F108	0 (Off)
041D	Virtual Input 30 State	0 to 1	---	1	F108	0 (Off)
041E	Virtual Input 31 State	0 to 1	---	1	F108	0 (Off)
041F	Virtual Input 32 State	0 to 1	---	1	F108	0 (Off)
0420	Virtual Input 33 State	0 to 1	---	1	F108	0 (Off)
0421	Virtual Input 34 State	0 to 1	---	1	F108	0 (Off)
0422	Virtual Input 35 State	0 to 1	---	1	F108	0 (Off)
0423	Virtual Input 36 State	0 to 1	---	1	F108	0 (Off)
0424	Virtual Input 37 State	0 to 1	---	1	F108	0 (Off)
0425	Virtual Input 38 State	0 to 1	---	1	F108	0 (Off)
0426	Virtual Input 39 State	0 to 1	---	1	F108	0 (Off)
0427	Virtual Input 40 State	0 to 1	---	1	F108	0 (Off)
0428	Virtual Input 41 State	0 to 1	---	1	F108	0 (Off)
0429	Virtual Input 42 State	0 to 1	---	1	F108	0 (Off)
042A	Virtual Input 43 State	0 to 1	---	1	F108	0 (Off)
042B	Virtual Input 44 State	0 to 1	---	1	F108	0 (Off)
042C	Virtual Input 45 State	0 to 1	---	1	F108	0 (Off)
042D	Virtual Input 46 State	0 to 1	---	1	F108	0 (Off)
042E	Virtual Input 47 State	0 to 1	---	1	F108	0 (Off)
042F	Virtual Input 48 State	0 to 1	---	1	F108	0 (Off)
0430	Virtual Input 49 State	0 to 1	---	1	F108	0 (Off)
0431	Virtual Input 50 State	0 to 1	---	1	F108	0 (Off)
0432	Virtual Input 51 State	0 to 1	---	1	F108	0 (Off)
0433	Virtual Input 52 State	0 to 1	---	1	F108	0 (Off)
0434	Virtual Input 53 State	0 to 1	---	1	F108	0 (Off)
0435	Virtual Input 54 State	0 to 1	---	1	F108	0 (Off)
0436	Virtual Input 55 State	0 to 1	---	1	F108	0 (Off)
0437	Virtual Input 56 State	0 to 1	---	1	F108	0 (Off)
0438	Virtual Input 57 State	0 to 1	---	1	F108	0 (Off)
0439	Virtual Input 58 State	0 to 1	---	1	F108	0 (Off)
043A	Virtual Input 59 State	0 to 1	---	1	F108	0 (Off)
043B	Virtual Input 60 State	0 to 1	---	1	F108	0 (Off)
043C	Virtual Input 61 State	0 to 1	---	1	F108	0 (Off)
043D	Virtual Input 62 State	0 to 1	---	1	F108	0 (Off)
043E	Virtual Input 63 State	0 to 1	---	1	F108	0 (Off)

Table B–10: MODBUS MEMORY MAP (Sheet 3 of 72)

ADDR	REGISTER NAME	RANGE	UNITS	STEP	FORMAT	DEFAULT
043F	Virtual Input 64 State	0 to 1	---	1	F108	0 (Off)
IEC103 Protocol Settings (Read/Write Setting)						
0582	IEC103 Common ASDU Address	0 to 254	---	1	F001	0
0583	IEC103 Sync Timeout	1 to 1440	min	1	F001	1
IEC 103 Binary Inputs (Read/Write Setting) (96 modules)						
0584	IEC103 Binary Input 1 FUN	0 to 255	---	1	F001	0
0585	IEC103 Binary Input 1 INF	0 to 255	---	1	F001	0
0586	IEC103 Binary Input 1 Operand	0 to 4294967295	---	1	F300	0
0588	...Repeated for Binary Input 2					
058C	...Repeated for Binary Input 3					
0590	...Repeated for Binary Input 4					
0594	...Repeated for Binary Input 5					
0598	...Repeated for Binary Input 6					
059C	...Repeated for Binary Input 7					
05A0	...Repeated for Binary Input 8					
05A4	...Repeated for Binary Input 9					
05A8	...Repeated for Binary Input 10					
05AC	...Repeated for Binary Input 11					
05B0	...Repeated for Binary Input 12					
05B4	...Repeated for Binary Input 13					
05B8	...Repeated for Binary Input 14					
05BC	...Repeated for Binary Input 15					
05C0	...Repeated for Binary Input 16					
05C4	...Repeated for Binary Input 17					
05C8	...Repeated for Binary Input 18					
05CC	...Repeated for Binary Input 19					
05D0	...Repeated for Binary Input 20					
05D4	...Repeated for Binary Input 21					
05D8	...Repeated for Binary Input 22					
05DC	...Repeated for Binary Input 23					
05E0	...Repeated for Binary Input 24					
05E4	...Repeated for Binary Input 25					
05E8	...Repeated for Binary Input 26					
05EC	...Repeated for Binary Input 27					
05F0	...Repeated for Binary Input 28					
05F4	...Repeated for Binary Input 29					
05F8	...Repeated for Binary Input 30					
05FC	...Repeated for Binary Input 31					
0600	...Repeated for Binary Input 32					
0604	...Repeated for Binary Input 33					
0608	...Repeated for Binary Input 34					
060C	...Repeated for Binary Input 35					
0610	...Repeated for Binary Input 36					
0614	...Repeated for Binary Input 37					
0618	...Repeated for Binary Input 38					
061C	...Repeated for Binary Input 39					
0620	...Repeated for Binary Input 40					
0624	...Repeated for Binary Input 41					
0628	...Repeated for Binary Input 42					
062C	...Repeated for Binary Input 43					
0630	...Repeated for Binary Input 44					
0634	...Repeated for Binary Input 45					
0638	...Repeated for Binary Input 46					
063C	...Repeated for Binary Input 47					

Table B–10: MODBUS MEMORY MAP (Sheet 4 of 72)

ADDR	REGISTER NAME	RANGE	UNITS	STEP	FORMAT	DEFAULT
0640	...Repeated for Binary Input 48					
0644	...Repeated for Binary Input 49					
0648	...Repeated for Binary Input 50					
064C	...Repeated for Binary Input 51					
0650	...Repeated for Binary Input 52					
0654	...Repeated for Binary Input 53					
0658	...Repeated for Binary Input 54					
065C	...Repeated for Binary Input 55					
0660	...Repeated for Binary Input 56					
0664	...Repeated for Binary Input 57					
0668	...Repeated for Binary Input 58					
066C	...Repeated for Binary Input 59					
0670	...Repeated for Binary Input 60					
0674	...Repeated for Binary Input 61					
0678	...Repeated for Binary Input 62					
067C	...Repeated for Binary Input 63					
0680	...Repeated for Binary Input 64					
0684	...Repeated for Binary Input 65					
0688	...Repeated for Binary Input 66					
068C	...Repeated for Binary Input 67					
0690	...Repeated for Binary Input 68					
0694	...Repeated for Binary Input 69					
0698	...Repeated for Binary Input 70					
069C	...Repeated for Binary Input 71					
06A0	...Repeated for Binary Input 72					
06A4	...Repeated for Binary Input 73					
06A8	...Repeated for Binary Input 74					
06AC	...Repeated for Binary Input 75					
06B0	...Repeated for Binary Input 76					
06B4	...Repeated for Binary Input 77					
06B8	...Repeated for Binary Input 78					
06BC	...Repeated for Binary Input 79					
06C0	...Repeated for Binary Input 80					
06C4	...Repeated for Binary Input 81					
06C8	...Repeated for Binary Input 82					
06CC	...Repeated for Binary Input 83					
06D0	...Repeated for Binary Input 84					
06D4	...Repeated for Binary Input 85					
06D8	...Repeated for Binary Input 86					
06DC	...Repeated for Binary Input 87					
06E0	...Repeated for Binary Input 88					
06E4	...Repeated for Binary Input 89					
06E8	...Repeated for Binary Input 90					
06EC	...Repeated for Binary Input 91					
06F0	...Repeated for Binary Input 92					
06F4	...Repeated for Binary Input 93					
06F8	...Repeated for Binary Input 94					
06FC	...Repeated for Binary Input 95					
0700	...Repeated for Binary Input 96					
IEC 103 ASDU Settings (Read/Write Setting) (4 modules)						
0704	IEC103 ASDU1 TYP	0 to 1	---	1	F630	1(9)
0705	IEC103 ASDU 1 FUN	0 to 255	---	1	F001	0
0706	IEC103 ASDU 1 INF	0 to 255	---	1	F001	0
0707	IEC103 ASDU 1 Scan Timeout	0 to 1000	---	1	F001	0

Table B–10: MODBUS MEMORY MAP (Sheet 5 of 72)

ADDR	REGISTER NAME	RANGE	UNITS	STEP	FORMAT	DEFAULT
0708	IEC103 ASDU 1 Analog Param 1	0 to 65535	---	1	F600	0
0709	IEC103 ASDU 1 Analog Factor 1	0 to 65.535	---	0.001	F001	1000
070A	IEC103 ASDU 1 Analog Offset 1	-32768 to 32767	---	1	F002	0
070B	IEC103 ASDU 1 Analog Param 2	0 to 65535	---	1	F600	0
070C	IEC103 ASDU 1 Analog Factor 2	0 to 65.535	---	0.001	F001	1000
070D	IEC103 ASDU 1 Analog Offset 2	-32768 to 32767	---	1	F002	0
070E	IEC103 ASDU 1 Analog Param 3	0 to 65535	---	1	F600	0
070F	IEC103 ASDU 1 Analog Factor 3	0 to 65.535	---	0.001	F001	1000
0710	IEC103 ASDU 1 Analog Offset 3	-32768 to 32767	---	1	F002	0
0711	IEC103 ASDU 1 Analog Param 4	0 to 65535	---	1	F600	0
0712	IEC103 ASDU 1 Analog Factor 4	0 to 65.535	---	0.001	F001	1000
0713	IEC103 ASDU 1 Analog Offset 4	-32768 to 32767	---	1	F002	0
0714	IEC103 ASDU 1 Analog Param 5	0 to 65535	---	1	F600	0
0715	IEC103 ASDU 1 Analog Factor 5	0 to 65.535	---	0.001	F001	1000
0716	IEC103 ASDU 1 Analog Offset 5	-32768 to 32767	---	1	F002	0
0717	IEC103 ASDU 1 Analog Param 6	0 to 65535	---	1	F600	0
0718	IEC103 ASDU 1 Analog Factor 6	0 to 65.535	---	0.001	F001	1000
0719	IEC103 ASDU 1 Analog Offset 6	-32768 to 32767	---	1	F002	0
071A	IEC103 ASDU 1 Analog Param 7	0 to 65535	---	1	F600	0
071B	IEC103 ASDU 1 Analog Factor 7	0 to 65.535	---	0.001	F001	1000
071C	IEC103 ASDU 1 Analog Offset 7	-32768 to 32767	---	1	F002	0
071D	IEC103 ASDU 1 Analog Param 8	0 to 65535	---	1	F600	0
071E	IEC103 ASDU 1 Analog Factor 8	0 to 65.535	---	0.001	F001	1000
071F	IEC103 ASDU 1 Analog Offset 8	-32768 to 32767	---	1	F002	0
0720	IEC103 ASDU 1 Analog Param 9	0 to 65535	---	1	F600	0
0721	IEC103 ASDU 1 Analog Factor 9	0 to 65.535	---	0.001	F001	1000
0722	IEC103 ASDU 1 Analog Offset 9	-32768 to 32767	---	1	F002	0
0723	...Repeated for IEC103 ASDU 2					
0742	...Repeated for IEC103 ASDU 3					
0761	...Repeated for IEC103 ASDU 4					
IEC 103 Commands (Read/Write Setting) (32 modules)						
0780	IEC103 Command 1 FUN	0 to 255	---	1	F001	0
0781	IEC103 Command 1 INF	0 to 255	---	1	F001	0
0782	IEC103 Command 1 Param ON	0 to 64	---	1	F631	0 (OFF)
0783	IEC103 Command 1 Param OFF	0 to 64	---	1	F631	0 (OFF)
0784	...Repeated for IEC103 Command 2					
0788	...Repeated for IEC103 Command 3					
078C	...Repeated for IEC103 Command 4					
0790	...Repeated for IEC103 Command 5					
0794	...Repeated for IEC103 Command 6					
0798	...Repeated for IEC103 Command 7					
079C	...Repeated for IEC103 Command 8					
07A0	...Repeated for IEC103 Command 9					
07A4	...Repeated for IEC103 Command 10					
07A8	...Repeated for IEC103 Command 11					
07AC	...Repeated for IEC103 Command 12					
07B0	...Repeated for IEC103 Command 13					
07B4	...Repeated for IEC103 Command 14					
07B8	...Repeated for IEC103 Command 15					
07BC	...Repeated for IEC103 Command 16					
07C0	...Repeated for IEC103 Command 17					
07C4	...Repeated for IEC103 Command 18					
07C8	...Repeated for IEC103 Command 19					
07CC	...Repeated for IEC103 Command 20					

Table B–10: MODBUS MEMORY MAP (Sheet 6 of 72)

ADDR	REGISTER NAME	RANGE	UNITS	STEP	FORMAT	DEFAULT
07D0	...Repeated for IEC103 Command 21					
07D4	...Repeated for IEC103 Command 22					
07D8	...Repeated for IEC103 Command 23					
07DC	...Repeated for IEC103 Command 24					
07E0	...Repeated for IEC103 Command 25					
07E4	...Repeated for IEC103 Command 26					
07E8	...Repeated for IEC103 Command 27					
07EC	...Repeated for IEC103 Command 28					
07F0	...Repeated for IEC103 Command 29					
07F4	...Repeated for IEC103 Command 30					
07F8	...Repeated for IEC103 Command 31					
07FC	...Repeated for IEC103 Command 32					
Digital Counter States Actual Values (Read Only Non-Volatile) (8 modules)						
0800	Digital Counter 1 Value	-2147483647 to 2147483647	---	1	F004	0
0802	Digital Counter 1 Frozen	-2147483647 to 2147483647	---	1	F004	0
0804	Digital Counter 1 Frozen Time Stamp	0 to 4294967295	---	1	F050	0
0806	Digital Counter 1 Frozen Time Stamp µs (microsecond part of time stamp)	0 to 4294967295	---	1	F003	0
0808	...Repeated for Digital Counter 2					
0810	...Repeated for Digital Counter 3					
0818	...Repeated for Digital Counter 4					
0820	...Repeated for Digital Counter 5					
0828	...Repeated for Digital Counter 6					
0830	...Repeated for Digital Counter 7					
0838	...Repeated for Digital Counter 8					
FlexStates (Read Only)						
0900	FlexState Bits (16 items)	0 to 65535	---	1	F001	0
Element States (Read Only)						
1000	Element Operate States (64 items)	0 to 65535	---	1	F502	0
User Displays Actuals (Read Only)						
1080	Formatted user-definable displays (16 items)	---	---	---	F200	(none)
Modbus User Map Actuals (Read Only)						
1200	User Map Values (256 items)	0 to 65535	---	1	F001	0
Element Targets (Read Only)						
14E0	Target Sequence	0 to 65535	---	1	F001	0
14E1	Number of Targets	0 to 65535	---	1	F001	0
Element Targets (Read/Write)						
14E2	Target to Read	0 to 65535	---	1	F001	0
Element Targets (Read Only)						
14E3	Target Message	---	---	---	F200	"."
Contact Input/Output States (Read Only)						
1500	Contact Input States (6 items)	0 to 65535	---	1	F500	0
1508	Virtual Input States (8 items)	0 to 65535	---	1	F500	0
1510	Contact Output States (4 items)	0 to 65535	---	1	F500	0
1518	Contact Output Current States (4 items)	0 to 65535	---	1	F500	0
1520	Contact Output Voltage States (4 items)	0 to 65535	---	1	F500	0
1528	Virtual Output States (6 items)	0 to 65535	---	1	F500	0
1530	Contact Output Detectors (4 items)	0 to 65535	---	1	F500	0
Remote Input/Output States (Read Only)						
1540	Remote Device States (2 items)	0 to 65535	---	1	F500	0
1542	Remote Input States (4 items)	0 to 65535	---	1	F500	0
1550	Remote Devices Online	0 to 1	---	1	F126	0 (No)
1551	Remote Double-Point Status Input 1 State	0 to 3	---	1	F605	3 (Bad)

Table B–10: MODBUS MEMORY MAP (Sheet 7 of 72)

ADDR	REGISTER NAME	RANGE	UNITS	STEP	FORMAT	DEFAULT
1552	Remote Double-Point Status Input 2 State	0 to 3	---	1	F605	3 (Bad)
1553	Remote Double-Point Status Input 3 State	0 to 3	---	1	F605	3 (Bad)
1554	Remote Double-Point Status Input 4 State	0 to 3	---	1	F605	3 (Bad)
1555	Remote Double-Point Status Input 5 State	0 to 3	---	1	F605	3 (Bad)
Platform Direct Input/Output States (Read Only)						
15C0	Direct Input States (6 items)	0 to 65535	---	1	F500	0
15C8	Direct Outputs Average Message Return Time 1	0 to 65535	ms	1	F001	0
15C9	Direct Outputs Average Message Return Time 2	0 to 65535	ms	1	F001	0
15CA	Direct Inputs/Outputs Unreturned Message Count - Ch. 1	0 to 65535	---	1	F001	0
15CB	Direct Inputs/Outputs Unreturned Message Count - Ch. 2	0 to 65535	---	1	F001	0
15D0	Direct Device States	0 to 65535	---	1	F500	0
15D1	Reserved	0 to 65535	---	1	F001	0
15D2	Direct Inputs/Outputs CRC Fail Count 1	0 to 65535	---	1	F001	0
15D3	Direct Inputs/Outputs CRC Fail Count 2	0 to 65535	---	1	F001	0
Field Unit Input/Output States (Read Only)						
15E0	Field Unit Contact Input States (3 items)	0 to 65535	---	1	F500	0
15E3	Field Unit Contact Input Output Operand States (8 items)	0 to 65535	---	1	F500	0
15EB	Field Contact Output Physical States (8 items)	0 to 65535	---	1	F500	0
15F3	Field Contact Output Current States (8 items)	0 to 65535	---	1	F500	0
15FB	Field Contact Output Physical States (8 items)	0 to 65535	---	1	F500	0
1603	Field Shared Input States	0 to 65535	---	1	F500	0
1604	Field Shared Input Channel States	0 to 65535	---	1	F500	0
1605	Field Shared Input Test States	0 to 65535	---	1	F500	0
1606	Field Shared Output Operand States	0 to 65535	---	1	F500	0
1607	Field Latching Output Open Operand States	0 to 65535	---	1	F500	0
1608	Field Latching Output Close Operand States	0 to 65535	---	1	F500	0
1609	Field Latching Output Open Driver States	0 to 65535	---	1	F500	0
160A	Field Latching Output Close Driver States	0 to 65535	---	1	F500	0
160B	Field Latching Output Physical States	0 to 65535	---	1	F500	0
160C	Field Unit Online/Offline States	0 to 65535	---	1	F500	0
160D	Field RTD Input Trouble States	0 to 65535	---	1	F500	0
160E	Field Transducer Input Trouble States	0 to 65535	---	1	F500	0
Ethernet Fibre Channel Status (Read Only)						
1610	Ethernet Primary Fibre Channel Status	0 to 2	---	1	F134	0 (Fail)
1611	Ethernet Secondary Fibre Channel Status	0 to 2	---	1	F134	0 (Fail)
1612	Ethernet Tertiary Fibre Channel Status	0 to 2	---	1	F134	0 (Fail)
Data Logger Actual Values (Read Only)						
1618	Data Logger Channel Count	0 to 16	channel	1	F001	0
1619	Time of Oldest Available Samples	0 to 4294967295	seconds	1	F050	0
161B	Time of Newest Available Samples	0 to 4294967295	seconds	1	F050	0
161D	Data Logger Duration	0 to 999.9	days	0.1	F001	0
Stator Differential Actual Values (Read Only)						
1660	Generator Differential Iad	0 to 999999.999	A	0.001	F060	0
1662	Generator Restraint Iar	0 to 999999.999	A	0.001	F060	0
1664	Generator Differential Ibd	0 to 999999.999	A	0.001	F060	0
1666	Generator Restraint Ibr	0 to 999999.999	A	0.001	F060	0
1668	Generator Differential Icd	0 to 999999.999	A	0.001	F060	0
166A	Generator Restraint Icr	0 to 999999.999	A	0.001	F060	0
166C	Stator Differential CT Primary	0 to 50000	---	1	F060	1
Stator Ground Actual Values (Read Only)						
1670	Stator Ground Vn 3rd	0 to 999999.999	V	0.001	F060	0
1672	Stator Ground Vn V0 3rd	0 to 999999.999	V	0.001	F060	0
1674	Stator Ground V0 3rd	0 to 999999.999	V	0.001	F060	0

Table B–10: MODBUS MEMORY MAP (Sheet 8 of 72)

ADDR	REGISTER NAME	RANGE	UNITS	STEP	FORMAT	DEFAULT
Subharmonic Stator Ground Actual Values (Read Only)						
1678	Subharmonic Injection Voltage	0 to 999999.999	V	0.001	F060	0
167A	Subharmonic Injection Current	0 to 999999.999	A	0.001	F060	0
167C	Stator Ground Resistance	0 to 500	kOhm	0.001	F003	500000
167E	Stator Ground Resistance Exceeded	0 to 0.1	---	0.1	F208	(none)
167F	Subharmonic Injection Current Angle	-360 to 360	---	0.1	F002	0
Sensitive Directional Power Actual Values (Read Only) (2 modules)						
1680	Sensitive Directional Power 1 Power	-2147483647 to 2147483647	W	1	F060	0
1682	Sensitive Directional Power 2 Power	-2147483647 to 2147483647	W	1	F060	0
Restricted Ground Fault Currents (Read Only) (6 modules)						
16A0	Differential Ground Current Magnitude	0 to 999999.999	A	0.001	F060	0
16A2	Restricted Ground Current Magnitude	0 to 999999.999	A	0.001	F060	0
16A4	...Repeated for Restricted Ground Fault 2					
16A8	...Repeated for Restricted Ground Fault 3					
16AC	...Repeated for Restricted Ground Fault 4					
16B0	...Repeated for Restricted Ground Fault 5					
16B4	...Repeated for Restricted Ground Fault 6					
Field Unit RTD Actuals (Read Only) (8 modules)						
16C0	Field RTD 1 Value	-32768 to 32767	°C	1	F002	0
16C1	...Repeated for Field RTD 2					
16C2	...Repeated for Field RTD 3					
16C3	...Repeated for Field RTD 4					
16C4	...Repeated for Field RTD 5					
16C5	...Repeated for Field RTD 6					
16C6	...Repeated for Field RTD 7					
16C7	...Repeated for Field RTD 8					
Field Unit Transducer Actuals (Read Only) (8 modules)						
16C8	Field Transducer 1 Value	-32.768 to 32.767	---	0.001	F004	0
16CA	...Repeated for Field Transducer 2					
16CC	...Repeated for Field Transducer 3					
16CE	...Repeated for Field Transducer 4					
16D0	...Repeated for Field Transducer 5					
16D2	...Repeated for Field Transducer 6					
16D4	...Repeated for Field Transducer 7					
16D6	...Repeated for Field Transducer 8					
Frequency Rate of Change Actual Values (Read Only) (4 modules)						
16E0	Frequency Rate of Change 1	-327.67 to 327.67	Hz/s	0.01	F002	0
16E1	Reserved (3 items)	0 to 65535	---	1	F001	0
16E4	...Repeated for Frequency Rate of Change 2					
16E8	...Repeated for Frequency Rate of Change 3					
16EC	...Repeated for Frequency Rate of Change 4					
Source Current (Read Only) (4 modules)						
1800	Source 1 Phase A Current RMS	0 to 999999.999	A	0.001	F060	0
1802	Source 1 Phase B Current RMS	0 to 999999.999	A	0.001	F060	0
1804	Source 1 Phase C Current RMS	0 to 999999.999	A	0.001	F060	0
1806	Source 1 Neutral Current RMS	0 to 999999.999	A	0.001	F060	0
1808	Source 1 Phase A Current Magnitude	0 to 999999.999	A	0.001	F060	0
180A	Source 1 Phase A Current Angle	-359.9 to 0	degrees	0.1	F002	0
180B	Source 1 Phase B Current Magnitude	0 to 999999.999	A	0.001	F060	0
180D	Source 1 Phase B Current Angle	-359.9 to 0	degrees	0.1	F002	0
180E	Source 1 Phase C Current Magnitude	0 to 999999.999	A	0.001	F060	0
1810	Source 1 Phase C Current Angle	-359.9 to 0	degrees	0.1	F002	0
1811	Source 1 Neutral Current Magnitude	0 to 999999.999	A	0.001	F060	0
1813	Source 1 Neutral Current Angle	-359.9 to 0	degrees	0.1	F002	0

Table B–10: MODBUS MEMORY MAP (Sheet 9 of 72)

ADDR	REGISTER NAME	RANGE	UNITS	STEP	FORMAT	DEFAULT
1814	Source 1 Ground Current RMS	0 to 999999.999	A	0.001	F060	0
1816	Source 1 Ground Current Magnitude	0 to 999999.999	A	0.001	F060	0
1818	Source 1 Ground Current Angle	-359.9 to 0	degrees	0.1	F002	0
1819	Source 1 Zero Sequence Current Magnitude	0 to 999999.999	A	0.001	F060	0
181B	Source 1 Zero Sequence Current Angle	-359.9 to 0	degrees	0.1	F002	0
181C	Source 1 Positive Sequence Current Magnitude	0 to 999999.999	A	0.001	F060	0
181E	Source 1 Positive Sequence Current Angle	-359.9 to 0	degrees	0.1	F002	0
181F	Source 1 Negative Sequence Current Magnitude	0 to 999999.999	A	0.001	F060	0
1821	Source 1 Negative Sequence Current Angle	-359.9 to 0	degrees	0.1	F002	0
1822	Source 1 Differential Ground Current Magnitude	0 to 999999.999	A	0.001	F060	0
1824	Source 1 Differential Ground Current Angle	-359.9 to 0	degrees	0.1	F002	0
1825	Reserved (27 items)	---	---	---	F001	0
1840	...Repeated for Source 2					
1880	...Repeated for Source 3					
18C0	...Repeated for Source 4					
Source Voltage (Read Only) (4 modules)						
1A00	Source 1 Phase AG Voltage RMS	0 to 999999.999	V	0.001	F060	0
1A02	Source 1 Phase BG Voltage RMS	0 to 999999.999	V	0.001	F060	0
1A04	Source 1 Phase CG Voltage RMS	0 to 999999.999	V	0.001	F060	0
1A06	Source 1 Phase AG Voltage Magnitude	0 to 999999.999	V	0.001	F060	0
1A08	Source 1 Phase AG Voltage Angle	-359.9 to 0	degrees	0.1	F002	0
1A09	Source 1 Phase BG Voltage Magnitude	0 to 999999.999	V	0.001	F060	0
1A0B	Source 1 Phase BG Voltage Angle	-359.9 to 0	degrees	0.1	F002	0
1A0C	Source 1 Phase CG Voltage Magnitude	0 to 999999.999	V	0.001	F060	0
1A0E	Source 1 Phase CG Voltage Angle	-359.9 to 0	degrees	0.1	F002	0
1A0F	Source 1 Phase AB or AC Voltage RMS	0 to 999999.999	V	0.001	F060	0
1A11	Source 1 Phase BC or BA Voltage RMS	0 to 999999.999	V	0.001	F060	0
1A13	Source 1 Phase CA or CB Voltage RMS	0 to 999999.999	V	0.001	F060	0
1A15	Source 1 Phase AB or AC Voltage Magnitude	0 to 999999.999	V	0.001	F060	0
1A17	Source 1 Phase AB or AC Voltage Angle	-359.9 to 0	degrees	0.1	F002	0
1A18	Source 1 Phase BC or BA Voltage Magnitude	0 to 999999.999	V	0.001	F060	0
1A1A	Source 1 Phase BC or BA Voltage Angle	-359.9 to 0	degrees	0.1	F002	0
1A1B	Source 1 Phase CA or CB Voltage Magnitude	0 to 999999.999	V	0.001	F060	0
1A1D	Source 1 Phase CA or CB Voltage Angle	-359.9 to 0	degrees	0.1	F002	0
1A1E	Source 1 Auxiliary Voltage RMS	0 to 999999.999	V	0.001	F060	0
1A20	Source 1 Auxiliary Voltage Magnitude	0 to 999999.999	V	0.001	F060	0
1A22	Source 1 Auxiliary Voltage Angle	-359.9 to 0	degrees	0.1	F002	0
1A23	Source 1 Zero Sequence Voltage Magnitude	0 to 999999.999	V	0.001	F060	0
1A25	Source 1 Zero Sequence Voltage Angle	-359.9 to 0	degrees	0.1	F002	0
1A26	Source 1 Positive Sequence Voltage Magnitude	0 to 999999.999	V	0.001	F060	0
1A28	Source 1 Positive Sequence Voltage Angle	-359.9 to 0	degrees	0.1	F002	0
1A29	Source 1 Negative Sequence Voltage Magnitude	0 to 999999.999	V	0.001	F060	0
1A2B	Source 1 Negative Sequence Voltage Angle	-359.9 to 0	degrees	0.1	F002	0
1A2C	Reserved (20 items)	---	---	---	F001	0
1A40	...Repeated for Source 2					
1A80	...Repeated for Source 3					
1AC0	...Repeated for Source 4					
Source Power (Read Only) (4 modules)						
1C00	Source 1 Three Phase Real Power	-1000000000000 to 1000000000000	W	0.001	F060	0
1C02	Source 1 Phase A Real Power	-1000000000000 to 1000000000000	W	0.001	F060	0
1C04	Source 1 Phase B Real Power	-1000000000000 to 1000000000000	W	0.001	F060	0

Table B–10: MODBUS MEMORY MAP (Sheet 10 of 72)

ADDR	REGISTER NAME	RANGE	UNITS	STEP	FORMAT	DEFAULT
1C06	Source 1 Phase C Real Power	-1000000000000 to 1000000000000	W	0.001	F060	0
1C08	Source 1 Three Phase Reactive Power	-1000000000000 to 1000000000000	var	0.001	F060	0
1C0A	Source 1 Phase A Reactive Power	-1000000000000 to 1000000000000	var	0.001	F060	0
1C0C	Source 1 Phase B Reactive Power	-1000000000000 to 1000000000000	var	0.001	F060	0
1C0E	Source 1 Phase C Reactive Power	-1000000000000 to 1000000000000	var	0.001	F060	0
1C10	Source 1 Three Phase Apparent Power	-1000000000000 to 1000000000000	VA	0.001	F060	0
1C12	Source 1 Phase A Apparent Power	-1000000000000 to 1000000000000	VA	0.001	F060	0
1C14	Source 1 Phase B Apparent Power	-1000000000000 to 1000000000000	VA	0.001	F060	0
1C16	Source 1 Phase C Apparent Power	-1000000000000 to 1000000000000	VA	0.001	F060	0
1C18	Source 1 Three Phase Power Factor	-0.999 to 1	---	0.001	F013	0
1C19	Source 1 Phase A Power Factor	-0.999 to 1	---	0.001	F013	0
1C1A	Source 1 Phase B Power Factor	-0.999 to 1	---	0.001	F013	0
1C1B	Source 1 Phase C Power Factor	-0.999 to 1	---	0.001	F013	0
1C1C	Reserved (4 items)	---	---	---	F001	0
1C20	...Repeated for Source 2					
1C40	...Repeated for Source 3					
1C60	...Repeated for Source 4					
Source Energy Metering (Read Only Non-Volatile) (4 modules)						
1D00	Source 1 Positive Watthour	0 to 1000000000000	Wh	0.001	F060	0
1D02	Source 1 Negative Watthour	0 to 1000000000000	Wh	0.001	F060	0
1D04	Source 1 Positive Varhour	0 to 1000000000000	varh	0.001	F060	0
1D06	Source 1 Negative Varhour	0 to 1000000000000	varh	0.001	F060	0
1D08	Reserved (8 items)	---	---	---	F001	0
1D10	...Repeated for Source 2					
1D20	...Repeated for Source 3					
1D30	...Repeated for Source 4					
Energy Commands (Read/Write Command)						
1D60	Energy Clear Command	0 to 1	---	1	F126	0 (No)
Source Frequency (Read Only) (4 modules)						
1D80	Frequency for Source 1	2 to 90	Hz	0.001	F003	0
1D82	Frequency for Source 2	2 to 90	Hz	0.001	F003	0
1D84	Frequency for Source 3	2 to 90	Hz	0.001	F003	0
1D86	Frequency for Source 4	2 to 90	Hz	0.001	F003	0
Source Voltage THD and Harmonics (Read Only) (4 modules)						
1F80	Source 1 Va THD	0 to 99.9	---	0.1	F001	0
1F81	Source 1 Va Harmonics - 2nd to 25th (24 items)	0 to 99.9	---	0.1	F001	0
1F99	Source 1 Vb THD	0 to 99.9	---	0.1	F001	0
1F9A	Source 1 Vb Harmonics - 2nd to 25th (24 items)	0 to 99.9	---	0.1	F001	0
1FB2	Source 1 Vc THD	0 to 99.9	---	0.1	F001	0
1FB3	Source 1 Vc Harmonics - 2nd to 25th (24 items)	0 to 99.9	---	0.1	F001	0
1FCB	...Repeated for Source 2					
2016	...Repeated for Source 3					
2061	...Repeated for Source 4					
Breaker Flashover (Read/Write Setting) (2 modules)						
2196	Breaker Flashover 1 Function	0 to 1	---	1	F102	0 (Disabled)
2197	Breaker Flashover 1 Side 1 Source	0 to 5	---	1	F167	0 (SRC 1)
2198	Breaker Flashover 1 Side 2 Source	0 to 6	---	1	F211	0 (None)
2199	Breaker Flashover 1 Status Closed A	0 to 4294967295	---	1	F300	0

Table B–10: MODBUS MEMORY MAP (Sheet 11 of 72)

ADDR	REGISTER NAME	RANGE	UNITS	STEP	FORMAT	DEFAULT
219B	Breaker Flashover 1 Status Closed B	0 to 4294967295	---	1	F300	0
219D	Breaker Flashover 1 Status Closed C	0 to 4294967295	---	1	F300	0
219F	Breaker Flashover 1 Voltage Pickup Level	0 to 1.5	pu	0.001	F001	850
21A0	Breaker Flashover 1 Voltage Difference Pickup Level	0 to 100000	V	1	F060	1000
21A2	Breaker Flashover 1 Current Pickup Level	0 to 1.5	pu	0.001	F001	600
21A3	Breaker Flashover 1 Pickup Delay	0 to 65.535	s	0.001	F001	100
21A4	Breaker Flashover 1 Supervision Phase A	0 to 4294967295	---	1	F300	0
21A6	Breaker Flashover 1 Supervision Phase B	0 to 4294967295	---	1	F300	0
21A8	Breaker Flashover 1 Supervision Phase C	0 to 4294967295	---	1	F300	0
21AA	Breaker Flashover 1 Block	0 to 4294967295	---	1	F300	0
21AC	Breaker Flashover 1 Events	0 to 1	---	1	F102	0 (Disabled)
21AD	Breaker Flashover 1 Target	0 to 2	---	1	F109	0 (Self-Reset)
21AE	Reserved (4 items)	---	---	---	F001	0
21B2	...Repeated for Breaker Flashover 2					
Passwords Unauthorized Access (Read/Write Command)						
2230	Reset Unauthorized Access	0 to 1	---	1	F126	0 (No)
Synchrocheck Actual Values (Read Only) (4 modules)						
2400	Synchrocheck 1 Delta Voltage	-1000000000000 to 1000000000000	V	1	F060	0
2402	Synchrocheck 1 Delta Frequency	0 to 655.35	Hz	0.01	F001	0
2403	Synchrocheck 1 Delta Phase	0 to 180 (not 0 to 359.9)	degrees	0.1	F001	0
2404	...Repeated for Synchrocheck 2					
2408	...Repeated for Synchrocheck 3					
240C	...Repeated for Synchrocheck 4					
Field Unit Raw Data Settings (Read/Write Setting)						
2460	Field Raw Data Port	0 to 7	---	1	F244	6 (H1a)
2461	Field Raw Data Freeze	0 to 1	---	1	F102	0 (Disabled)
Remote Double-Point Status Inputs (Read/Write Setting Registers) (5 modules)						
2540	Remote Double-point Status Input 1 Device	1 to 32	---	1	F001	1
2541	Remote Double-point Status Input 1 Item	0 to 64	---	1	F606	0 (None)
2542	Remote Double-point Status Input 1 Name	1 to 64	---	1	F205	"RemDPS Ip 1"
2548	Remote Double-point Status Input 1 Events	0 to 1	---	1	F102	0 (Disabled)
2549	... Repeated for Remote Double-point Status Input 2					
2552	... Repeated for Remote Double-point Status Input 3					
255B	... Repeated for Remote Double-point Status Input 4					
2564	... Repeated for Remote Double-point Status Input 5					
Phasor Measurement Unit Actual Values (Read Only)						
256D	PMU 1 Phase A Voltage Magnitude	0 to 999999.999	V	0.001	F060	0
256F	PMU Unit 1 Phase A Voltage Angle	-180 to 180	°	0.01	F002	0
2570	PMU 1 Phase B Voltage Magnitude	0 to 999999.999	V	0.001	F060	0
2572	PMU 1 Phase B Voltage Angle	-180 to 180	°	0.01	F002	0
2573	PMU 1 Phase C Voltage Magnitude	0 to 999999.999	V	0.001	F060	0
2575	PMU 1 Phase C Voltage Angle	-180 to 180	°	0.01	F002	0
2576	PMU 1 Auxiliary Voltage Magnitude	0 to 999999.999	V	0.001	F060	0
2578	PMU 1 Auxiliary Voltage Angle	-180 to 180	°	0.01	F002	0
2579	PMU 1 Positive Sequence Voltage Magnitude	0 to 999999.999	V	0.001	F060	0
257B	PMU 1 Positive Sequence Voltage Angle	-180 to 180	°	0.01	F002	0
257C	PMU 1 Negative Sequence Voltage Magnitude	0 to 999999.999	V	0.001	F060	0
257E	PMU 1 Negative Sequence Voltage Angle	-180 to 180	°	0.01	F002	0
257F	PMU 1 Zero Sequence Voltage Magnitude	0 to 999999.999	V	0.001	F060	0
2581	PMU 1 Zero Sequence Voltage Angle	-180 to 180	°	0.01	F002	0
2582	PMU 1 Phase A Current Magnitude	0 to 999999.999	A	0.001	F060	0
2584	PMU 1 Phase A Current Angle	-180 to 180	°	0.01	F002	0
2585	PMU 1 Phase B Current Magnitude	0 to 999999.999	A	0.001	F060	0

Table B–10: MODBUS MEMORY MAP (Sheet 12 of 72)

ADDR	REGISTER NAME	RANGE	UNITS	STEP	FORMAT	DEFAULT
2587	PMU 1 Phase B Current Angle	-180 to 180	°	0.01	F002	0
2588	PMU 1 Phase C Current Magnitude	0 to 999999.999	A	0.001	F060	0
258A	PMU 1 Phase C Current Angle	-180 to 180	°	0.01	F002	0
258B	PMU 1 Ground Current Magnitude	0 to 999999.999	A	0.001	F060	0
258D	PMU 1 Ground Current Angle	-180 to 180	°	0.01	F002	0
258E	PMU 1 Positive Sequence Current Magnitude	0 to 999999.999	A	0.001	F060	0
2590	PMU 1 Positive Sequence Current Angle	-180 to 180	°	0.01	F002	0
2591	PMU 1 Negative Sequence Current Magnitude	0 to 999999.999	A	0.001	F060	0
2593	PMU 1 Negative Sequence Current Angle	-180 to 180	°	0.01	F002	0
2594	PMU 1 Zero Sequence Current Magnitude	0 to 999999.999	A	0.001	F060	0
2596	PMU 1 Zero Sequence Current Angle	-180 to 180	°	0.01	F002	0
2597	PMU 1 Frequency	2 to 90	Hz	0.001	F003	0
2599	PMU 1 df/dt	-327.67 to 327.67	Hz/s	0.01	F002	0
259A	PMU 1 Configuration Change Counter	0 to 65535	---	1	F001	0
259B	Reserved (4 items)	0 to 1	---	1	F001	0
Phasor Measurement Unit Integer (Read Only)						
2699	PMU 1 SOC Timestamp	0 to 4294967295	seconds	1	F003	0
269B	PMU 1 FRAMESEC Timestamp	0 to 4294967295	seconds	1	F003	0
269D	PMU 1 STAT Flags	0 to 4294967295	---	1	F003	0
Phasor Measurement Unit Aggregator Actual Values (Read Only)						
26BD	PMU 1 Aggregator PDU Size	---	---	---	F001	0
IEC 61850 GGIO5 Configuration (Read/Write Setting Registers) (16 modules)						
26D0	IEC 61850 GGIO5 uinteger Input 1 Operand	---	---	---	F612	0
26D1	IEC 61850 GGIO5 uinteger Input 2 Operand	---	---	---	F612	0
26D2	IEC 61850 GGIO5 uinteger Input 3 Operand	---	---	---	F612	0
26D3	IEC 61850 GGIO5 uinteger Input 4 Operand	---	---	---	F612	0
26D4	IEC 61850 GGIO5 uinteger Input 5 Operand	---	---	---	F612	0
26D5	IEC 61850 GGIO5 uinteger Input 6 Operand	---	---	---	F612	0
26D6	IEC 61850 GGIO5 uinteger Input 7 Operand	---	---	---	F612	0
26D7	IEC 61850 GGIO5 uinteger Input 8 Operand	---	---	---	F612	0
26D8	IEC 61850 GGIO5 uinteger Input 9 Operand	---	---	---	F612	0
26D9	IEC 61850 GGIO5 uinteger Input 10 Operand	---	---	---	F612	0
26DA	IEC 61850 GGIO5 uinteger Input 11 Operand	---	---	---	F612	0
26DB	IEC 61850 GGIO5 uinteger Input 12 Operand	---	---	---	F612	0
26DC	IEC 61850 GGIO5 uinteger Input 13 Operand	---	---	---	F612	0
26DD	IEC 61850 GGIO5 uinteger Input 14 Operand	---	---	---	F612	0
26DE	IEC 61850 GGIO5 uinteger Input 15 Operand	---	---	---	F612	0
26DF	IEC 61850 GGIO5 uinteger Input 16 Operand	---	---	---	F612	0
IEC 61850 Received Integers (Read Only Actual Values) (16 modules)						
26F0	IEC 61850 Received uinteger 1	0 to 4294967295	---	1	F003	0
26F2	IEC 61850 Received uinteger 2	0 to 4294967295	---	1	F003	0
26F4	IEC 61850 Received uinteger 3	0 to 4294967295	---	1	F003	0
26F6	IEC 61850 Received uinteger 4	0 to 4294967295	---	1	F003	0
26F8	IEC 61850 Received uinteger 5	0 to 4294967295	---	1	F003	0
26FA	IEC 61850 Received uinteger 6	0 to 4294967295	---	1	F003	0
26FC	IEC 61850 Received uinteger 7	0 to 4294967295	---	1	F003	0
26FE	IEC 61850 Received uinteger 8	0 to 4294967295	---	1	F003	0
2700	IEC 61850 Received uinteger 9	0 to 4294967295	---	1	F003	0
2702	IEC 61850 Received uinteger 10	0 to 4294967295	---	1	F003	0
2704	IEC 61850 Received uinteger 11	0 to 4294967295	---	1	F003	0
2706	IEC 61850 Received uinteger 12	0 to 4294967295	---	1	F003	0
2708	IEC 61850 Received uinteger 13	0 to 4294967295	---	1	F003	0
270A	IEC 61850 Received uinteger 14	0 to 4294967295	---	1	F003	0
270C	IEC 61850 Received uinteger 15	0 to 4294967295	---	1	F003	0

Table B–10: MODBUS MEMORY MAP (Sheet 13 of 72)

ADDR	REGISTER NAME	RANGE	UNITS	STEP	FORMAT	DEFAULT
270E	IEC 61850 Received uinteger 16	0 to 4294967295	---	1	F003	0
Source Current THD and Harmonics (Read Only) (4 modules)						
2800	Ia THD for Source 1	0 to 99.9	---	0.1	F001	0
2801	Ia Harmonics for Source 1 - 2nd to 25th (24 items)	0 to 99.9	---	0.1	F001	0
2821	Ib THD for Source 1	0 to 99.9	---	0.1	F001	0
2822	Ib Harmonics for Source 1 - 2nd to 25th (24 items)	0 to 99.9	---	0.1	F001	0
283A	Reserved (8 items)	0 to 0.1	---	0.1	F001	0
2842	Ic THD for Source 1	0 to 99.9	---	0.1	F001	0
2843	Ic Harmonics for Source 1 - 2nd to 25th (24 items)	0 to 99.9	---	0.1	F001	0
285B	Reserved (8 items)	0 to 0.1	---	0.1	F001	0
2863	...Repeated for Source 2					
28C6	...Repeated for Source 3					
2929	...Repeated for Source 4					
Expanded FlexStates (Read Only)						
2B00	FlexStates, one per register (256 items)	0 to 1	---	1	F108	0 (Off)
Expanded Contact Input/Output States (Read Only)						
2D00	Contact Input States, one per register (96 items)	0 to 1	---	1	F108	0 (Off)
2D80	Contact Output States, one per register (64 items)	0 to 1	---	1	F108	0 (Off)
2E00	Virtual Output States, one per register (96 items)	0 to 1	---	1	F108	0 (Off)
Expanded Remote Input/Output Status (Read Only)						
2F00	Remote Device States, one per register (32 items)	0 to 1	---	1	F155	0 (Offline)
2F80	Remote Input States, one per register (64 items)	0 to 1	---	1	F108	0 (Off)
Oscillography Values (Read Only)						
3000	Oscillography Number of Triggers	0 to 65535	---	1	F001	0
3001	Oscillography Available Records	0 to 65535	---	1	F001	0
3002	Oscillography Last Cleared Date	0 to 400000000	---	1	F050	0
3004	Oscillography Number Of Cycles Per Record	0 to 65535	---	1	F001	0
Oscillography Commands (Read/Write Command)						
3005	Oscillography Force Trigger	0 to 1	---	1	F126	0 (No)
3011	Oscillography Clear Data	0 to 1	---	1	F126	0 (No)
Oscillography Analog Values (Read Only)						
3012	Oscillography Number of Triggers	0 to 32767	---	1	F001	0
User-Programmable Fault Report Commands (Read/Write Command)						
3060	User Fault Report Clear	0 to 1	---	1	F126	0 (No)
User-Programmable Fault Report Actual Values (Read Only)						
3070	Newest Record Number	0 to 65535	---	1	F001	0
3071	Cleared Date	0 to 4294967295	---	1	F050	0
3073	Report Date (10 items)	0 to 4294967295	---	1	F050	0
User-Programmable Fault Report (Read/Write Setting) (2 modules)						
3090	Fault Report 1 Fault Trigger	0 to 4294967295	---	1	F300	0
3092	Fault Report 1 Function	0 to 1	---	1	F102	0 (Disabled)
3093	Fault Report 1 Prefault Trigger	0 to 4294967295	---	1	F300	0
3095	Fault Report Analog Channel 1 (32 items)	0 to 65536	---	1	F600	0
30B5	Reserved (5 items)	---	---	---	F001	0
30BA	...Repeated for Fault Report 2					
Modbus File Transfer (Read/Write)						
3100	Name of file to read	---	---	---	F204	(none)
Modbus File Transfer Values (Read Only)						
3200	Character position of current block within file	0 to 4294967295	---	1	F003	0
3202	Size of currently-available data block	0 to 65535	---	1	F001	0
3203	Block of data from requested file (122 items)	0 to 65535	---	1	F001	0
Security (Read/Write Setting)						
3280	Administrator Alphanumeric Password Setting	---	---	---	F202	(none)

Table B–10: MODBUS MEMORY MAP (Sheet 14 of 72)

ADDR	REGISTER NAME	RANGE	UNITS	STEP	FORMAT	DEFAULT
Security (Read Only)						
328A	Administrator Alphanumeric Password Status	0 to 1	---	1	F102	0 (Disabled)
Security (Read/Write)						
328B	Administrator Alphanumeric Password Entry	---	---	---	F202	(none)
Security (Read/Write Setting)						
3295	Supervisor Alphanumeric Password Setting	---	---	---	F202	(none)
Security (Read Only)						
329F	Supervisor Alphanumeric Password Status	0 to 1	---	1	F102	0 (Disabled)
Security (Read/Write)						
32A0	Supervisor Alphanumeric Password Entry	---	---	---	F202	(none)
Security (Read/Write Setting)						
32AA	Engineer Alphanumeric Password Setting	---	---	---	F202	(none)
Security (Read Only)						
32B4	Engineer Alphanumeric Password Status	0 to 1	---	1	F102	0 (Disabled)
Security (Read/Write)						
32B5	Engineer Alphanumeric Password Entry	---	---	---	F202	(none)
Security (Read/Write Setting)						
32BF	Operator Alphanumeric Password Setting	---	---	---	F202	(none)
Security (Read Only)						
32C9	Operator Alphanumeric Password Status	0 to 1	---	1	F102	0 (Disabled)
Security (Read/Write)						
32CA	Operator Alphanumeric Password Entry	---	---	---	F202	(none)
Security (Read/Write Setting)						
32D4	Observer Alphanumeric Password Setting	---	---	---	F202	(none)
Security (Read Only)						
32DE	Observer Alphanumeric Password Status	0 to 1	---	1	F102	0 (Disabled)
Security (Read/Write)						
32DF	Observer Alphanumeric Password Entry	---	---	1	F202	(none)
Security (Read Only)						
32E9	Reserved for password settings of future roles (63 items)	0 to 65535	---	1	F001	0
3328	Security Status Indicator	0 to 65535	---	1	F618	0
Security (Read/Write Setting)						
3329	Session Lockout	0 to 99	---	1	F001	3
332A	Session Lockout Period	0 to 9999	min	1	F001	3
332B	Load Factory Defaults	0 to 1	---	1	F126	0 (No)
332C	Syslog Server IP Address	0 to 4294967295	---	1	F003	0
332E	Syslog Server Port Number	1 to 65535	---	1	F001	514
Security Supervisory (Read/Write Setting)						
3331	Device Authentication Enable	0 to 1	---	1	F126	1 (Yes)
3332	Supervisor Role Enable	0 to 1	---	1	F102	0 (Disabled)
3333	Lock Relay	0 to 1	---	1	F102	0 (Disabled)
3334	Factory Service Mode Enable	0 to 1	---	1	F102	0 (Disabled)
3335	Failed Authentication Alarm Enable	0 to 1	---	1	F102	1 (Enabled)
3336	Firmware Lock Alarm	0 to 1	---	1	F102	1 (Enabled)
3337	Settings Lock Alarm	0 to 1	---	1	F102	1 (Enabled)
3338	Bypass Access	0 to 3	---	1	F628	0 (Disabled)
333A	Serial Inactivity Timeout	1 to 9999	---	1	F001	1
Security Command (Read/Write Command)						
3350	Operator Logoff	0 to 1	---	1	F126	0 (No)
3351	Engineer Logoff	0 to 1	---	1	F126	0 (No)
3352	Administrator Logoff	0 to 1	---	1	F126	0 (No)
3353	Clear Security Data	0 to 1	---	1	F126	0 (No)
Security Reserved Modbus Registers (Read/Write)						
3360	Address 0x3360 reserved for serial login (20 items)	0 to 9999	---	1	F001	3

Table B–10: MODBUS MEMORY MAP (Sheet 15 of 72)

ADDR	REGISTER NAME	RANGE	UNITS	STEP	FORMAT	DEFAULT
3374	Address 0x3374 reserved for serial logout	0 to 9999	---	1	F001	3
Security Reserved Modbus Registers (Read Only)						
3375	Address 0x3374 reserved for serial logout	0 to 5	---	1	F617	3 (Engineer)
Event Recorder Actual Values (Read Only)						
3400	Events Since Last Clear	0 to 4294967295	---	1	F003	0
3402	Number of Available Events	0 to 4294967295	---	1	F003	0
3404	Event Recorder Last Cleared Date	0 to 4294967295	---	1	F050	0
Event Recorder Commands (Read/Write Command)						
3406	Event Recorder Clear Command	0 to 1	---	1	F126	0 (No)
DCmA Input Values (Read Only) (24 modules)						
34C0	DCmA Inputs 1 Value	-9999.999 to 9999.999	---	0.001	F004	0
34C2	DCmA Inputs 2 Value	-9999.999 to 9999.999	---	0.001	F004	0
34C4	DCmA Inputs 3 Value	-9999.999 to 9999.999	---	0.001	F004	0
34C6	DCmA Inputs 4 Value	-9999.999 to 9999.999	---	0.001	F004	0
34C8	DCmA Inputs 5 Value	-9999.999 to 9999.999	---	0.001	F004	0
34CA	DCmA Inputs 6 Value	-9999.999 to 9999.999	---	0.001	F004	0
34CC	DCmA Inputs 7 Value	-9999.999 to 9999.999	---	0.001	F004	0
34CE	DCmA Inputs 8 Value	-9999.999 to 9999.999	---	0.001	F004	0
34D0	DCmA Inputs 9 Value	-9999.999 to 9999.999	---	0.001	F004	0
34D2	DCmA Inputs 10 Value	-9999.999 to 9999.999	---	0.001	F004	0
34D4	DCmA Inputs 11 Value	-9999.999 to 9999.999	---	0.001	F004	0
34D6	DCmA Inputs 12 Value	-9999.999 to 9999.999	---	0.001	F004	0
34D8	DCmA Inputs 13 Value	-9999.999 to 9999.999	---	0.001	F004	0
34DA	DCmA Inputs 14 Value	-9999.999 to 9999.999	---	0.001	F004	0
34DC	DCmA Inputs 15 Value	-9999.999 to 9999.999	---	0.001	F004	0
34DE	DCmA Inputs 16 Value	-9999.999 to 9999.999	---	0.001	F004	0
34E0	DCmA Inputs 17 Value	-9999.999 to 9999.999	---	0.001	F004	0
34E2	DCmA Inputs 18 Value	-9999.999 to 9999.999	---	0.001	F004	0
34E4	DCmA Inputs 19 Value	-9999.999 to 9999.999	---	0.001	F004	0
34E6	DCmA Inputs 20 Value	-9999.999 to 9999.999	---	0.001	F004	0
34E8	DCmA Inputs 21 Value	-9999.999 to 9999.999	---	0.001	F004	0
34EA	DCmA Inputs 22 Value	-9999.999 to 9999.999	---	0.001	F004	0
34EC	DCmA Inputs 23 Value	-9999.999 to 9999.999	---	0.001	F004	0
34EE	DCmA Inputs 24 Value	-9999.999 to 9999.999	---	0.001	F004	0
RTD Input Values (Read Only) (48 modules)						
34F0	RTD Input 1 Value	-32768 to 32767	°C	1	F002	0
34F1	RTD Input 2 Value	-32768 to 32767	°C	1	F002	0
34F2	RTD Input 3 Value	-32768 to 32767	°C	1	F002	0
34F3	RTD Input 4 Value	-32768 to 32767	°C	1	F002	0
34F4	RTD Input 5 Value	-32768 to 32767	°C	1	F002	0
34F5	RTD Input 6 Value	-32768 to 32767	°C	1	F002	0
34F6	RTD Input 7 Value	-32768 to 32767	°C	1	F002	0
34F7	RTD Input 8 Value	-32768 to 32767	°C	1	F002	0
34F8	RTD Input 9 Value	-32768 to 32767	°C	1	F002	0
34F9	RTD Input 10 Value	-32768 to 32767	°C	1	F002	0
34FA	RTD Input 11 Value	-32768 to 32767	°C	1	F002	0
34FB	RTD Input 12 Value	-32768 to 32767	°C	1	F002	0
34FC	RTD Input 13 Value	-32768 to 32767	°C	1	F002	0
34FD	RTD Input 14 Value	-32768 to 32767	°C	1	F002	0
34FE	RTD Input 15 Value	-32768 to 32767	°C	1	F002	0
34FF	RTD Input 16 Value	-32768 to 32767	°C	1	F002	0
3500	RTD Input 17 Value	-32768 to 32767	°C	1	F002	0
3501	RTD Input 18 Value	-32768 to 32767	°C	1	F002	0
3502	RTD Input 19 Value	-32768 to 32767	°C	1	F002	0

Table B–10: MODBUS MEMORY MAP (Sheet 16 of 72)

ADDR	REGISTER NAME	RANGE	UNITS	STEP	FORMAT	DEFAULT
3503	RTD Input 20 Value	-32768 to 32767	°C	1	F002	0
3504	RTD Input 21 Value	-32768 to 32767	°C	1	F002	0
3505	RTD Input 22 Value	-32768 to 32767	°C	1	F002	0
3506	RTD Input 23 Value	-32768 to 32767	°C	1	F002	0
3507	RTD Input 24 Value	-32768 to 32767	°C	1	F002	0
3508	RTD Input 25 Value	-32768 to 32767	°C	1	F002	0
3509	RTD Input 26 Value	-32768 to 32767	°C	1	F002	0
350A	RTD Input 27 Value	-32768 to 32767	°C	1	F002	0
350B	RTD Input 28 Value	-32768 to 32767	°C	1	F002	0
350C	RTD Input 29 Value	-32768 to 32767	°C	1	F002	0
350D	RTD Input 30 Value	-32768 to 32767	°C	1	F002	0
350E	RTD Input 31 Value	-32768 to 32767	°C	1	F002	0
350F	RTD Input 32 Value	-32768 to 32767	°C	1	F002	0
3510	RTD Input 33 Value	-32768 to 32767	°C	1	F002	0
3511	RTD Input 34 Value	-32768 to 32767	°C	1	F002	0
3512	RTD Input 35 Value	-32768 to 32767	°C	1	F002	0
3513	RTD Input 36 Value	-32768 to 32767	°C	1	F002	0
3514	RTD Input 37 Value	-32768 to 32767	°C	1	F002	0
3515	RTD Input 38 Value	-32768 to 32767	°C	1	F002	0
3516	RTD Input 39 Value	-32768 to 32767	°C	1	F002	0
3517	RTD Input 40 Value	-32768 to 32767	°C	1	F002	0
3518	RTD Input 41 Value	-32768 to 32767	°C	1	F002	0
3519	RTD Input 42 Value	-32768 to 32767	°C	1	F002	0
351A	RTD Input 43 Value	-32768 to 32767	°C	1	F002	0
351B	RTD Input 44 Value	-32768 to 32767	°C	1	F002	0
351C	RTD Input 45 Value	-32768 to 32767	°C	1	F002	0
351D	RTD Input 46 Value	-32768 to 32767	°C	1	F002	0
351E	RTD Input 47 Value	-32768 to 32767	°C	1	F002	0
351F	RTD Input 48 Value	-32768 to 32767	°C	1	F002	0
Ohm Input Values (Read Only) (2 modules)						
3520	Ohm Inputs 1 Value	0 to 65535	Ohm	1	F001	0
3521	Ohm Inputs 2 Value	0 to 65535	Ohm	1	F001	0
Expanded Direct Input/Output Status (Read Only)						
3560	Direct Device States, one per register (16 items)	0 to 1	---	1	F155	0 (Offline)
3570	Direct Input States, one per register (96 items)	0 to 1	---	1	F108	0 (Off)
RADIUS Configuration (Read/Write Setting)						
3735	Primary RADIUS IP Address	0 to 4294967295	---	1	F003	0
3737	Primary Authentication Port	1 to 65535	---	1	F001	1812
3738	Primary Accounting Port	1 to 65535	---	1	F001	1813
3739	Secondary RADIUS IP Address	0 to 4294967295	---	1	F003	0
373B	Secondary Authentication Port	0 to 65535	---	1	F001	1812
373D	Secondary Accounting Port	0 to 65535	---	1	F001	1813
373F	RADIUS Authentication Method	---	---	1	F619	0 (EAP-TTLS)
3740	RADIUS Vendor ID	1 to 65535	---	1	F001	2910
3741	Authentication Timeout	0 to 9999	sec	1	F001	10
3742	Authentication Retries	0 to 9999	---	1	F001	3
3743	RADIUS Authentication Shared Secret	---	---	---	F202	(none)
PTP Basic Configuration (Read/Write Setting)						
3750	PTP Strict Power Profile	0 to 1	---	1	F102	0 (Disabled)
3751	PTP Domain Number	0 to 255	---	1	F001	0
3752	PTP VLAN Priority	0 to 7	---	1	F001	4
3753	PTP VLAN ID	0 to 4095	---	1	F001	0
3754	Undefined (2 items)	0 to 1	---	1	F001	0

Table B–10: MODBUS MEMORY MAP (Sheet 17 of 72)

ADDR	REGISTER NAME	RANGE	UNITS	STEP	FORMAT	DEFAULT
PTP Port Configuration (Read/Write Setting) (3 modules)						
3756	PTP Port 1 Function	0 to 1	---	1	F102	0 (Disabled)
3757	PTP Port 1 Path Delay Adder	0 to 60000	ns	1	F001	0
3758	PTP Port 1 Path Delay Asymmetry	-1000 to 1000	ns	1	F002	0
3759	...Repeated for PTP Port 2					
375C	...Repeated for PTP Port 3					
Real Time Clock Synchronizing Actual Values (Read Only)						
375F	RTC Sync Source	0 to 5	---	1	F624	0 (None)
3760	PTP GrandMaster ID	0 to 100	--	1	F073	0
3764	Real Time Clock Accuracy	0 to 999999999	ns	1	F003	0
3766	PTP Port 1 State (3 items)	0 to 4	--	1	F625	0 (Disabled)
3769	RTC Offset	0 to 999999999	ns	1	F004	0
376B	PTP - IRIG-B Delta	-500000000 to 500000000	ns	1	F004	0
Real Time Clock Synchronizing FlexAnalogs (Read Only)						
376D	PTP - IRIG-B Delta FlexAnalog	-262143 to 262143	---	1	F004	0
Frequency Out-of-Band Accumulation Actual Values (Read Only)						
37A0	Frequency OOB Accumulator Band 1 Accumulation	0 to 999.9	%	0.1	F001	0
37A1	Frequency OOB Accumulator Band 2 Accumulation	0 to 999.9	%	0.1	F001	0
37A2	Frequency OOB Accumulator Band 3 Accumulation	0 to 999.9	%	0.1	F001	0
37A3	Frequency OOB Accumulator Band 4 Accumulation	0 to 999.9	%	0.1	F001	0
37A4	Frequency OOB Accumulator Band 5 Accumulation	0 to 999.9	%	0.1	F001	0
37A5	Frequency OOB Accumulator Band 6 Accumulation	0 to 999.9	%	0.1	F001	0
37A6	Frequency OOB Accumulator Band 7 Accumulation	0 to 999.9	%	0.1	F001	0
Frequency Out-of-Band Accumulation Commands (Read/Write)						
37A7	Reset Frequency Out-Of-Band Accumulators	0 to 1	---	1	F126	0 (No)
37A8	Preset Frequency Out-Of-Band Accumulators	0 to 1	---	1	F126	0 (No)
Field Units (Read/Write Setting) (8 modules)						
3800	Field Unit 1 ID	0 to 1	---	1	F205	"U1"
3806	Field Unit 1 Function	0 to 1	---	1	F102	0 (Disabled)
3807	Field Unit 1 Type	0 to 3	---	1	F243	0 (CC-05)
3808	Field Unit 1 Serial Number	1 to 1	---	1	F205	"000000000000"
380E	Field Unit 1 Port	1 to 4	---	1	F001	1
380F	...Repeated for Field Unit 2					
381E	...Repeated for Field Unit 3					
382D	...Repeated for Field Unit 4					
383C	...Repeated for Field Unit 5					
384B	...Repeated for Field Unit 6					
385A	...Repeated for Field Unit 7					
3869	...Repeated for Field Unit 8					
Field Unit Process Card Ports (Read/Write Setting)						
3878	Field Unit 1 Process Card Port	0 to 7	---	1	F244	6 (H1a)
3879	Field Unit 2 Process Card Port	0 to 7	---	1	F244	4 (H2a)
387A	Field Unit3 Process Card Port	0 to 7	---	1	F244	2 (H3a)
387B	Field Unit 4 Process Card Port	0 to 7	---	1	F244	0 (H4a)
387C	Field Unit 5 Process Card Port	0 to 7	---	1	F244	7 (H1b)
387D	Field Unit 6 Process Card Port	0 to 7	---	1	F244	5 (H2b)
387E	Field Unit 7 Process Card Port	0 to 7	---	1	F244	3 (H3b)
387F	Field Unit 8 Process Card Port	0 to 7	---	1	F244	1 (H4b)
Field Unit CT VT Settings (Read/Write Setting) (6 modules)						
3890	Remote Phase CT x Origin 1	0 to 16	---	1	F247	0 (None)
3891	Remote Phase CT x Origin 2	0 to 16	---	1	F247	0 (None)
3892	Remote Ground CT x Origin 1	0 to 16	---	1	F248	0 (None)
3893	Remote Ground CT x Origin 2	0 to 16	---	1	F248	0 (None)

Table B–10: MODBUS MEMORY MAP (Sheet 18 of 72)

ADDR	REGISTER NAME	RANGE	UNITS	STEP	FORMAT	DEFAULT
3894	AC Bank Redundancy Type	0 to 2	---	1	F261	1 (Dependability Biased)
3895	Remote Phase CT 1 Primary	1 to 65000	---	1	F001	1
3896	Remote Phase CT 1 Secondary	0 to 1	---	1	F123	0 (1 A)
3897	Remote Ground CT 1 Primary	1 to 65000	---	1	F001	1
3898	Remote Ground CT 1 Secondary	0 to 1	---	1	F123	0 (1 A)
3899	Remote Phase VT 1 Connection	0 to 1	---	1	F100	0 (Wye)
389A	Remote Phase VT 1 Secondary	25 to 240	---	0.1	F001	664
389B	Remote Phase VT 1 Ratio	1 to 24000	---	1	F060	1
389D	Remote Auxiliary VT 1 Connection	0 to 6	---	1	F166	1 (Vag)
389E	Remote Auxiliary VT 1 Secondary	25 to 240	---	0.1	F001	664
389F	Remote Auxiliary VT 1 Ratio	1 to 24000	---	1	F060	1
38A1	...Repeated for Field Unit 2					
38B2	...Repeated for Field Unit 3					
38C3	...Repeated for Field Unit 4					
38D4	...Repeated for Field Unit 5					
38E5	...Repeated for Field Unit 6					
Field Unit Contact Inputs (Read/Write Setting) (40 modules)						
3900	Field Contact Input 1 ID	---	---	---	F205	"FCI 1"
3906	Field Contact Input 1 Origin	0 to 8	---	1	F256	0 (None)
3907	Field Contact Input 1 Input	1 to 18	---	1	F001	1
3908	Field Contact Input 1 Failsafe Value	0 to 1	---	1	F108	0 (Off)
3909	Field Contact Input 1 Debounce Time	0 to 16	ms	0.5	F001	20
390A	Field Contact Input 1 Events	0 to 1	---	1	F102	1 (Enabled)
390B	...Repeated for Field Contact Input 2					
3916	...Repeated for Field Contact Input 3					
3921	...Repeated for Field Contact Input 4					
392C	...Repeated for Field Contact Input 5					
3937	...Repeated for Field Contact Input 6					
3942	...Repeated for Field Contact Input 7					
394D	...Repeated for Field Contact Input 8					
3958	...Repeated for Field Contact Input9					
3963	...Repeated for Field Contact Input 10					
396E	...Repeated for Field Contact Input 11					
3979	...Repeated for Field Contact Input 12					
3984	...Repeated for Field Contact Input 13					
398F	...Repeated for Field Contact Input 14					
399A	...Repeated for Field Contact Input 15					
39A5	...Repeated for Field Contact Input 16					
39B0	...Repeated for Field Contact Input 17					
39BB	...Repeated for Field Contact Input 18					
39C6	...Repeated for Field Contact Input 19					
39D1	...Repeated for Field Contact Input 20					
39DC	...Repeated for Field Contact Input 21					
39E7	...Repeated for Field Contact Input 22					
39F2	...Repeated for Field Contact Input 23					
39FD	...Repeated for Field Contact Input 24					
3A08	...Repeated for Field Contact Input 25					
3A13	...Repeated for Field Contact Input 26					
3A1E	...Repeated for Field Contact Input 27					
3A29	...Repeated for Field Contact Input 28					
3A34	...Repeated for Field Contact Input 29					
3A3F	...Repeated for Field Contact Input 30					
3A4A	...Repeated for Field Contact Input 31					

Table B–10: MODBUS MEMORY MAP (Sheet 19 of 72)

ADDR	REGISTER NAME	RANGE	UNITS	STEP	FORMAT	DEFAULT
3A55	...Repeated for Field Contact Input 32					
3A60	...Repeated for Field Contact Input 33					
3A6B	...Repeated for Field Contact Input 34					
3A76	...Repeated for Field Contact Input 35					
3A81	...Repeated for Field Contact Input 36					
3A8C	...Repeated for Field Contact Input 37					
3A97	...Repeated for Field Contact Input 38					
3AA2	...Repeated for Field Contact Input 39					
3AAD	...Repeated for Field Contact Input 40					
Field Unit Shared Inputs (Read/Write Setting) (16 modules)						
3B00	Field Shared Input 1 ID	0 to 65535	---	1	F205	"SI 1"
3B06	Field Shared Input 1 Unit Origin 1	0 to 8	---	1	F256	0 (None)
3B07	Field Shared Input 1 Channel Origin 1	1 to 15	---	1	F001	1
3B08	Field Shared Input 1 Events	0 to 1	---	1	F102	1 (Enabled)
3B09	...Repeated for Field Shared Input 2					
3B12	...Repeated for Field Shared Input 3					
3B1B	...Repeated for Field Shared Input 4					
3B24	...Repeated for Field Shared Input 5					
3B2D	...Repeated for Field Shared Input 6					
3B36	...Repeated for Field Shared Input 7					
3B3F	...Repeated for Field Shared Input 8					
3B48	...Repeated for Field Shared Input 9					
3B51	...Repeated for Field Shared Input 10					
3B5A	...Repeated for Field Shared Input 11					
3B63	...Repeated for Field Shared Input 12					
3B6C	...Repeated for Field Shared Input 13					
3B75	...Repeated for Field Shared Input 14					
3B7E	...Repeated for Field Shared Input 15					
3B87	...Repeated for Field Shared Input 16					
Field Unit Contact Outputs (Read/Write Setting) (8 modules)						
3B90	Field Contact Output 1 ID (6 items)	---	---	---	F205	"FCO U /OUT"
3BB4	Field Output 1 Operate (6 items)	0 to 4294967295	---	1	F300	0
3BC0	Field Output 1 Seal In (6 items)	0 to 4294967295	---	1	F300	0
3BCC	Field Output 1 Events (6 items)	0 to 1	---	1	F102	1 (Enabled)
3BD2	...Repeated for Field Contact Output 2					
3C14	...Repeated for Field Contact Output 3					
3C56	...Repeated for Field Contact Output 4					
3C98	...Repeated for Field Contact Output 5					
3CDA	...Repeated for Field Contact Output 6					
3D1C	...Repeated for Field Contact Output 7					
3D5E	...Repeated for Field Contact Output 8					
Field Unit Latching Outputs (Read/Write Setting) (8 modules)						
3DC7	Field Latching Output 1 ID	0 to 1	---	1	F205	"FLO Ux /LO"
3DCD	Field Latching Output 1 Open	0 to 4294967295	---	1	F300	0
3DCF	Field Latching Output 1 Close	0 to 4294967295	---	1	F300	0
3DD1	Field Latching Output 1 Events	0 to 1	---	1	F102	1 (Enabled)
3DD2	Reserved (2 items)	0 to 1	---	1	F001	0
3DD4	...Repeated for Field Latching Output 2					
3DE1	...Repeated for Field Latching Output 3					
3DEE	...Repeated for Field Latching Output 4					
3DFB	...Repeated for Field Latching Output 5					
3E08	...Repeated for Field Latching Output 6					
3E15	...Repeated for Field Latching Output 7					
3E22	...Repeated for Field Latching Output 8					

Table B–10: MODBUS MEMORY MAP (Sheet 20 of 72)

ADDR	REGISTER NAME	RANGE	UNITS	STEP	FORMAT	DEFAULT
Field Unit Shared Outputs (Read/Write Setting) (16 modules)						
3E30	Field Shared Output 1 ID	0 to 65535	---	1	F205	"SO 1"
3E36	Field Shared Output 1 Operate	0 to 4294967295	---	1	F300	0
3E38	Field Shared Output 1 Unit Dest 1	0 to 8	---	1	F256	0 (None)
3E39	Field Shared Output 1 Channel Dest 1	1 to 15	---	1	F001	1
3E3A	Field Shared Output 1 Unit Dest 2	0 to 8	---	1	F256	0 (None)
3E3B	Field Shared Output 1 Channel Dest 2	1 to 15	---	1	F001	1
3E3C	Field Shared Output 1 Events	0 to 1	---	1	F102	1 (Enabled)
3E3D	...Repeated for Field Shared Output 2					
3E4A	...Repeated for Field Shared Output 3					
3E57	...Repeated for Field Shared Output 4					
3E64	...Repeated for Field Shared Output 5					
3E71	...Repeated for Field Shared Output 6					
3E7E	...Repeated for Field Shared Output 7					
3E8B	...Repeated for Field Shared Output 8					
3E98	...Repeated for Field Shared Output 9					
3EA5	...Repeated for Field Shared Output 10					
3EB2	...Repeated for Field Shared Output 11					
3EBF	...Repeated for Field Shared Output 12					
3ECC	...Repeated for Field Shared Output 13					
3ED9	...Repeated for Field Shared Output 14					
3EE6	...Repeated for Field Shared Output 15					
3EF3	...Repeated for Field Shared Output 16					
Field Unit RTDs (Read/Write Setting) (8 modules)						
3F00	Field Unit RTD 1Name	0 to 1	---	1	F205	"RTD 1"
3F06	Field Unit RTD 1 Origin	0 to 24	---	1	F253	0 (None)
3F07	Field Unit RTD 1 Type	0 to 2	---	1	F259	0 (100 Ohm Nickel)
3F08	...Repeated for Field Unit RTD 2					
3F10	...Repeated for Field Unit RTD 3					
3F18	...Repeated for Field Unit RTD 4					
3F20	...Repeated for Field Unit RTD 5					
3F28	...Repeated for Field Unit RTD 6					
3F30	...Repeated for Field Unit RTD 7					
3F38	...Repeated for Field Unit RTD 8					
Field Unit Transducers (Read/Write Setting) (8 modules)						
3F40	Field Unit Transducer 1 Name	0 to 1	---	1	F205	"TRD 1"
3F46	Field Unit Transducer 1 Origin	0 to 24	---	1	F253	0 (None)
3F47	Field Unit Transducer 1 Range	0 to 9	---	1	F246	6 (0...20mA)
3F48	Field Unit Transducer 1 Min Value	-9999.999 to 9999.999	---	0.001	F004	0
3F4A	Field Unit Transducer 1 Max Value	-9999.999 to 9999.999	---	0.001	F004	100000
3F4C	Field Unit Transducer 1 Units	---	---	---	F206	(none)
3F4F	...Repeated for Field Unit Transducer 2					
3F5E	...Repeated for Field Unit Transducer 3					
3F6D	...Repeated for Field Unit Transducer 4					
3F7C	...Repeated for Field Unit Transducer 5					
3F8B	...Repeated for Field Unit Transducer 6					
3F9A	...Repeated for Field Unit Transducer 7					
3FA9	...Repeated for Field Unit Transducer 8					
Field Unit Identifiers (Read Only) (8 modules)						
3FB8	Attached Field Unit 1 Serial Number	---	---	1	F205	(none)
3FBE	Attached Filed Unit 1 Port Number	---	---	1	F001	0
3FBF	Attached Field Unit 1 Type	0 to 3	---	1	F243	0 (CC-05)
3FC0	Field Unit 1 Status	0 to 4	---	1	F262	0 (Disabled)

Table B–10: MODBUS MEMORY MAP (Sheet 21 of 72)

ADDR	REGISTER NAME	RANGE	UNITS	STEP	FORMAT	DEFAULT
3FC1	...Repeated for Field Unit 2					
3FCA	...Repeated for Field Unit 3					
3FD3	...Repeated for Field Unit 4					
3FDC	...Repeated for Field Unit 5					
3FE5	...Repeated for Field Unit 6					
3FEE	...Repeated for Field Unit 7					
3FF7	...Repeated for Field Unit 8					
Passwords (Read/Write Command)						
4000	Command Password Setting	0 to 4294967295	---	1	F202	(none)
Passwords (Read/Write Setting)						
400A	Setting Password Setting	0 to 4294967295	---	1	F202	(none)
Passwords (Read/Write)						
4014	Command Password Entry	0 to 4294967295	---	1	F202	(none)
401E	Setting Password Entry	0 to 4294967295	---	1	F202	(none)
Passwords (Read Only)						
4028	Command Password Status	0 to 1	---	1	F102	0 (Disabled)
4029	Setting Password Status	0 to 1	---	1	F102	0 (Disabled)
Passwords (Read/Write Setting)						
402A	Command Password Access Timeout	5 to 480	min	1	F001	5
402B	Setting Password Access Timeout	5 to 480	min	1	F001	30
402C	Invalid Password Attempts (before lockout)	2 to 5	---	1	F001	3
402D	Password Lockout Duration	5 to 60	min	1	F001	5
Passwords (Read/Write)						
402E	Password Access Events	0 to 1	---	1	F102	0 (Disabled)
Passwords (Read/Write Setting)						
402F	Local Setting Auth	1 to 4294967295	---	1	F300	1
4031	Remote Setting Auth	0 to 4294967295	---	1	F300	1
4033	Access Auth Timeout	5 to 480	min	1	F001	30
User Display Invoke (Read/Write Setting)						
4040	Invoke and Scroll Through User Display Menu Operand	0 to 4294967295	---	1	F300	0
LED Test (Read/Write Setting)						
4048	LED Test Function	0 to 1	---	1	F102	0 (Disabled)
4049	LED Test Control	0 to 4294967295	---	1	F300	0
Preferences (Read/Write Setting)						
404F	Language	0 to 5	---	1	F531	0 (English)
4050	Flash Message Time	0.5 to 10	s	0.1	F001	10
4051	Default Message Timeout	10 to 900	s	1	F001	300
4052	Default Message Intensity	0 to 3	---	1	F101	0 (25%)
4053	Screen Saver Feature	0 to 1	---	1	F102	0 (Disabled)
4054	Screen Saver Wait Time	1 to 65535	min	1	F001	30
4055	Current Cutoff Level	0.002 to 0.02	pu	0.001	F001	20
4056	Voltage Cutoff Level	0.1 to 1	V	0.1	F001	10
Remote RTD Communications (Read/Write Setting)						
407A	RRTD Slave Address	1 to 254	---	1	F001	254
407B	RRTD Baud Rate	0 to 4	---	1	F602	4 (19200)
Communications (Read/Write Setting)						
407D	COM2 Selection	0 to 3	---	1	F601	0 (RS485)
407E	COM1 Minimum Response Time	0 to 1000	ms	10	F001	0
407F	COM2 Minimum Response Time	0 to 1000	ms	10	F001	0
4080	Modbus Slave Address	1 to 254	---	1	F001	254
4083	RS485 Com1 Baud Rate	0 to 11	---	1	F112	8 (115200)
4084	RS485 Com1 Parity	0 to 2	---	1	F113	0 (None)
4085	RS485 Com2 Baud Rate	0 to 11	---	1	F112	8 (115200)
4086	RS485 Com2 Parity	0 to 2	---	1	F113	2 (Even)

Table B–10: MODBUS MEMORY MAP (Sheet 22 of 72)

ADDR	REGISTER NAME	RANGE	UNITS	STEP	FORMAT	DEFAULT
4087	Port 1 IP Address	0 to 4294967295	---	1	F003	2130706433
4089	Port 1 IP Subnet Mask	0 to 4294967295	---	1	F003	4278190080
408B	Port 1 Gateway IP Address	0 to 4294967295	---	1	F003	56554497
408D	Network Address NSAP	---	---	---	F074	0
4097	Port 1 Link Loss Alert	0 to 1	---	1	F102	0 (Disabled)
4098	Port 2 Link Loss Alert	0 to 1	---	1	F102	0 (Disabled)
4099	Port 3 Link Loss Alert	0 to 1	---	1	F102	0 (Disabled)
409A	DNP Channel 1 Port	0 to 5	---	1	F177	0 (None)
409B	DNP Channel 2 Port	0 to 5	---	1	F177	0 (None)
409C	DNP Address	0 to 65519	---	1	F001	1
409E	DNP Client Addresses (2 items)	0 to 4294967295	---	1	F003	0
40A3	TCP Port Number for the Modbus protocol	0 to 65535	---	1	F001	502
40A4	TCP/UDP Port Number for the DNP Protocol	0 to 65535	---	1	F001	20000
40A5	TCP Port Number for the HTTP (Web Server) Protocol	0 to 65535	---	1	F001	80
40A6	Main UDP Port Number for the TFTP Protocol	0 to 65535	---	1	F001	69
40A7	Data Transfer UDP Port Numbers for the TFTP Protocol (zero means “automatic”) (2 items)	0 to 65535	---	1	F001	0
40A9	DNP Unsolicited Responses Function	0 to 1	---	1	F102	0 (Disabled)
40AA	DNP Unsolicited Responses Timeout	0 to 60	s	1	F001	5
40AB	DNP Unsolicited Responses Maximum Retries	1 to 255	---	1	F001	10
40AC	DNP Unsolicited Responses Destination Address	0 to 65519	---	1	F001	1
40AD	Ethernet Operation Mode	0 to 1	---	1	F192	1 (Full-Duplex)
40AE	DNP Current Scale Factor	0 to 8	---	1	F194	2 (1)
40AF	DNP Voltage Scale Factor	0 to 8	---	1	F194	2 (1)
40B0	DNP Power Scale Factor	0 to 8	---	1	F194	2 (1)
40B1	DNP Energy Scale Factor	0 to 8	---	1	F194	2 (1)
40B2	DNP Power Scale Factor	0 to 8	---	1	F194	2 (1)
40B3	DNP Other Scale Factor	0 to 8	---	1	F194	2 (1)
40B4	DNP Current Default Deadband	0 to 100000000	---	1	F003	30000
40B6	DNP Voltage Default Deadband	0 to 100000000	---	1	F003	30000
40B8	DNP Power Default Deadband	0 to 100000000	---	1	F003	30000
40BA	DNP Energy Default Deadband	0 to 100000000	---	1	F003	30000
40BC	DNP Power Factor Default Deadband	0 to 100000000	--	1	F003	30000
40BE	DNP Other Default Deadband	0 to 100000000	---	1	F003	30000
40C0	DNP IIN Time Synchronization Bit Period	1 to 10080	min	1	F001	1440
40C1	DNP Message Fragment Size	30 to 2048	---	1	F001	240
40C2	DNP Client Address 3	0 to 4294967295	---	1	F003	0
40C4	DNP Client Address 4	0 to 4294967295	---	1	F003	0
40C6	DNP Client Address 5	0 to 4294967295	---	1	F003	0
40C8	DNP Number of Paired Binary Output Control Points	0 to 32	---	1	F001	0
40C9	DNP TCP Connection Timeout	10 to 7200	s	1	F001	120
40CA	DNP Communications Reserved (22 items)	0 to 1	---	1	F001	0
40E0	TCP Port Number for the IEC 60870-5-104 Protocol	0 to 65535	---	1	F001	2404
40E1	IEC 60870-5-104 Protocol Function	0 to 1	---	1	F102	0 (Disabled)
40E2	IEC 60870-5-104 Protocol Common Address of ASDU	0 to 65535	---	1	F001	0
40E3	IEC 60870-5-104 Protocol Cyclic Data Transmit Period	1 to 65535	s	1	F001	60
40E4	IEC 60870-5-104 Current Default Threshold	0 to 100000000	---	1	F003	30000
40E6	IEC 60870-5-104 Voltage Default Threshold	0 to 100000000	---	1	F003	30000
40E8	IEC 60870-5-104 Power Default Threshold	0 to 100000000	---	1	F003	30000
40EA	IEC 60870-5-104 Energy Default Threshold	0 to 100000000	---	1	F003	30000
40EC	IEC 60870-5-104 Power Default Threshold	0 to1	---	0.01	F001	100
40EE	IEC 60870-5-104 Other Default Threshold	0 to 100000000	---	1	F003	30000
40F0	IEC 60870-5-104 Client Address (5 items)	0 to 4294967295	---	1	F003	0
4104	IEC 60870-5-104 Redundancy Port Enabled/Disabled	0 to 1	---	1	F126	0 (No)

Table B–10: MODBUS MEMORY MAP (Sheet 23 of 72)

ADDR	REGISTER NAME	RANGE	UNITS	STEP	FORMAT	DEFAULT
4105	Port 2 IP Address	0 to 4294967295	---	1	F003	2130706433
4107	Port 2 IP Subnet Mask	0 to 4294967295	---	1	F003	4278190080
4109	Port 2 Gateway IP Address	0 to 4294967295	---	1	F003	56554497
410B	PRT2 Ethernet Operation Mode	0 to 1	---	1	F192	1 (Full-Duplex)
410C	PRT2 Redundancy Enabled	0 to 2	---	1	F627	0 (None)
410D	Port 3 IP Address	0 to 4294967295	---	1	F003	2130706433
410F	Port 3 IP Subnet Mask	0 to 4294967295	---	1	F003	4278190080
4111	Port 3 Gateway IP Address	0 to 4294967295	---	1	F003	56554497
4113	Port 3 Ethernet Operation Mode	0 to 1	---	1	F192	1 (Full-Duplex)
4114	PRT1 GOOSE Enabled	0 to 1	---	1	F102	1 (Enabled)
4115	PRT2 GOOSE Enabled	0 to 1	---	1	F102	1 (Enabled)
4116	PRT3 GOOSE Enabled	0 to 1	---	1	F102	1 (Enabled)
4117	Default IPv4 Route	0 to 4294967295	---	1	F003	2130706433
4119	PRT2 PRP Mcst Addr	---	---	---	F072	0
411C	IEC Communications Reserved (33 items)	0 to 1	---	1	F001	0
413E	High Enet Traffic Function	0 to 1	---	1	F102	0 (Disabled)
413F	High Enet Traffic Events	0 to 1	---	1	F102	0 (Disabled)
4140	DNP Object 1 Default Variation	1 to 2	---	1	F001	2
4141	DNP Object 2 Default Variation	1 to 3	---	1	F001	2
4142	DNP Object 20 Default Variation	0 to 3	---	1	F523	0 (1)
4143	DNP Object 21 Default Variation	0 to 3	---	1	F524	0 (1)
4144	DNP Object 22 Default Variation	0 to 3	---	1	F523	0 (1)
4145	DNP Object 23 Default Variation	0 to 3	---	1	F523	0 (1)
4146	DNP Object 30 Default Variation	1 to 5	---	1	F001	1
4147	DNP Object 32 Default Variation	0 to 5	---	1	F525	0 (1)
4148	SCADA Protocol	0 to 2	---	1	F629	0 (DNP 3.0)
Communications Actual Values (Read Only)						
4160	Modbus Available TCP/IP Connections	0 to 4	---	1	F001	4
4161	DNP Available TCP/IP Connections	0 to 2	---	1	F001	2
4162	IEC Available TCP/IP Connections	0 to 2	---	1	F001	2
4163	MMS Available TCP/IP Connections	0 to 5	---	1	F001	5
4164	PMU Available TCP/IP Connections	0 to 4	---	1	F001	4
Simple Network Time Protocol (Read/Write Setting)						
4168	Simple Network Time Protocol (SNTP) Function	0 to 1	---	1	F102	0 (Disabled)
4169	Simple Network Time Protocol (SNTP) Server IP Address	0 to 4294967295	---	1	F003	0
416B	Simple Network Time Protocol (SNTP) UDP Port Number	1 to 65535	---	1	F001	123
Data Logger Commands (Read/Write Command)						
4170	Data Logger Clear	0 to 1	---	1	F126	0 (No)
Data Logger (Read/Write Setting)						
4181	Data Logger Channel Settings (16 items)	---	---	---	F600	0
4191	Data Logger Mode	0 to 1	---	1	F260	0 (Continuous)
4192	Data Logger Trigger	0 to 4294967295	---	1	F300	0
4194	Data Logger Rate	15 to 3600000	ms	1	F003	60000
Clock (Read/Write Setting)						
419F	Synchronizing Source	0 to 3	---	1	F623	0 (None)
Clock (Read/Write Command)						
41A0	Real Time Clock Set Time	0 to 235959	---	1	F050	0
Clock (Read/Write Setting)						
41A2	SR Date Format	0 to 4294967295	---	1	F051	0
41A4	SR Time Format	0 to 4294967295	---	1	F052	0
41A6	IRIG-B Signal Type	0 to 2	---	1	F114	0 (None)
41A7	Clock Events Enable / Disable	0 to 1	---	1	F102	0 (Disabled)
41A8	Time Zone Offset from UTC	–24 to 24	hours	0.5	F002	0
41A9	Daylight Savings Time (DST) Function	0 to 1	---	1	F102	0 (Disabled)

Table B–10: MODBUS MEMORY MAP (Sheet 24 of 72)

ADDR	REGISTER NAME	RANGE	UNITS	STEP	FORMAT	DEFAULT
41AA	Daylight Savings Time (DST) Start Month	0 to 11	---	1	F237	0 (January)
41AB	Daylight Savings Time (DST) Start Day	0 to 6	---	1	F238	0 (Sunday)
41AC	Daylight Savings Time (DST) Start Day Instance	0 to 4	---	1	F239	0 (First)
41AD	Daylight Savings Time (DST) Start Hour	0 to 23	---	1	F001	2
41AE	Daylight Savings Time (DST) Stop Month	0 to 11	---	1	F237	0 (January)
41AF	Daylight Savings Time (DST) Stop Day	0 to 6	---	1	F238	0 (Sunday)
41B0	Daylight Savings Time (DST) Stop Day Instance	0 to 4	---	1	F239	0 (First)
41B1	Daylight Savings Time (DST) Stop Hour	0 to 23	---	1	F001	2
Oscillography (Read/Write Setting)						
41C0	Oscillography Number of Records	3 to 64	---	1	F001	5
41C1	Oscillography Trigger Mode	0 to 1	---	1	F118	0 (Auto. Overwrite)
41C2	Oscillography Trigger Position	0 to 100	%	1	F001	50
41C3	Oscillography Trigger Source	0 to 4294967295	---	1	F300	0
41C5	Oscillography AC Input Waveforms	0 to 4	---	1	F183	2 (16 samples/ cycle)
41D0	Oscillography Analog Channel *n* (16 items)	0 to 65535	---	1	F600	0
4200	Oscillography Digital Channel *n* (63 items)	0 to 4294967295	---	1	F300	0
Trip and Alarm LEDs (Read/Write Setting)						
42B0	Trip LED Input FlexLogic Operand	0 to 4294967295	---	1	F300	0
42B2	Alarm LED Input FlexLogic Operand	0 to 4294967295	---	1	F300	0
User Programmable LEDs (Read/Write Setting) (48 modules)						
42C0	FlexLogic Operand to Activate LED	0 to 4294967295	---	1	F300	0
42C2	User LED type (latched or self-resetting)	0 to 1	---	1	F127	1 (Self-Reset)
42C3	...Repeated for User-Programmable LED 2					
42C6	...Repeated for User-Programmable LED 3					
42C9	...Repeated for User-Programmable LED 4					
42CC	...Repeated for User-Programmable LED 5					
42CF	...Repeated for User-Programmable LED 6					
42D2	...Repeated for User-Programmable LED 7					
42D5	...Repeated for User-Programmable LED 8					
42D8	...Repeated for User-Programmable LED 9					
42DB	...Repeated for User-Programmable LED 10					
42DE	...Repeated for User-Programmable LED 11					
42E1	...Repeated for User-Programmable LED 12					
42E4	...Repeated for User-Programmable LED 13					
42E7	...Repeated for User-Programmable LED 14					
42EA	...Repeated for User-Programmable LED 15					
42ED	...Repeated for User-Programmable LED 16					
42F0	...Repeated for User-Programmable LED 17					
42F3	...Repeated for User-Programmable LED 18					
42F6	...Repeated for User-Programmable LED 19					
42F9	...Repeated for User-Programmable LED 20					
42FC	...Repeated for User-Programmable LED 21					
42FF	...Repeated for User-Programmable LED 22					
4302	...Repeated for User-Programmable LED 23					
4305	...Repeated for User-Programmable LED 24					
4308	...Repeated for User-Programmable LED 25					
430B	...Repeated for User-Programmable LED 26					
430E	...Repeated for User-Programmable LED 27					
4311	...Repeated for User-Programmable LED 28					
4314	...Repeated for User-Programmable LED 29					
4317	...Repeated for User-Programmable LED 30					
431A	...Repeated for User-Programmable LED 31					
431D	...Repeated for User-Programmable LED 32					

Table B–10: MODBUS MEMORY MAP (Sheet 25 of 72)

ADDR	REGISTER NAME	RANGE	UNITS	STEP	FORMAT	DEFAULT
4320	...Repeated for User-Programmable LED 33					
4323	...Repeated for User-Programmable LED 34					
4326	...Repeated for User-Programmable LED 35					
4329	...Repeated for User-Programmable LED 36					
432C	...Repeated for User-Programmable LED 37					
432F	...Repeated for User-Programmable LED 38					
4332	...Repeated for User-Programmable LED 39					
4335	...Repeated for User-Programmable LED 40					
4338	...Repeated for User-Programmable LED 41					
433B	...Repeated for User-Programmable LED 42					
433E	...Repeated for User-Programmable LED 43					
4341	...Repeated for User-Programmable LED 44					
4344	...Repeated for User-Programmable LED 45					
4347	...Repeated for User-Programmable LED 46					
434A	...Repeated for User-Programmable LED 47					
434D	...Repeated for User-Programmable LED 48					
PRP Status (Read Only)						
4363	Total Received Port A	0 to 4294967295	---	1	F003	0
4365	Total Received Port B	0 to 4294967295	---	1	F003	0
4367	Total Mismatches Port A	0 to 4294967295	---	1	F003	0
4369	Total Mismatches Port B	0 to 4294967295	---	1	F003	0
436B	Total Errors	0 to 4294967295	---	1	F003	0
IPv4 Route Table (Read/Write Setting) (6 modules)						
4370	IPv4 Network Route 1 Destination	0 to 4294967295	---	1	F003	2130706433
4372	IPv4 Network Route 1 Netmask	0 to 4294967295	---	1	F003	4278190080
4374	IPv4 Network Route 1 Gateway	0 to 4294967295	---	1	F003	2130706433
4376	...Repeated for Route 2					
437C	...Repeated for Route 3					
4382	...Repeated for Route 4					
4388	...Repeated for Route 5					
438E	...Repeated for Route 6					
Installation (Read/Write Setting)						
43E0	Relay Programmed State	0 to 1	---	1	F133	0 (Not Programmed)
43E1	Relay Name	---	---	---	F202	“Relay-1”
User Programmable Self Tests (Read/Write Setting)						
4441	User Programmable Detect Ring Break Function	0 to 1	---	1	F102	1 (Enabled)
4442	User Programmable Direct Device Off Function	0 to 1	---	1	F102	1 (Enabled)
4443	User Programmable Remote Device Off Function	0 to 1	---	1	F102	1 (Enabled)
4444	User Programmable First Ethernet Fail Function	0 to 1	---	1	F102	0 (Disabled)
4445	User Programmable Secondary Ethernet Fail Function	0 to 1	---	1	F102	0 (Disabled)
4446	User Programmable Battery Fail Function	0 to 1	---	1	F102	1 (Enabled)
4447	User Programmable SNTP Fail Function	0 to 1	---	1	F102	1 (Enabled)
4448	User Programmable IRIG-B Fail Function	0 to 1	---	1	F102	1 (Enabled)
4449	User Programmable Ethernet Switch Fail Function	0 to 1	---	1	F102	1 (Enabled)
444A	Process Bus Failure Operand	0 to 4294967295	---	1	F300	0
444C	PTP Fail Function	0 to 1	---	1	F102	1 (Enabled)
444D	User Programmable Third Ethernet Fail Function	0 to 1	---	1	F102	0 (Disabled)
444E	User Programmable SFP Fail Function	0 to 1	---	1	F102	0 (Disabled)
CT Settings (Read/Write Setting) (6 modules)						
4480	Phase CT 1 Primary	1 to 65000	A	1	F001	1
4481	Phase CT 1 Secondary	0 to 1	---	1	F123	0 (1 A)
4482	Ground CT 1 Primary	1 to 65000	A	1	F001	1
4483	Ground CT 1 Secondary	0 to 1	---	1	F123	0 (1 A)

Table B–10: MODBUS MEMORY MAP (Sheet 26 of 72)

ADDR	REGISTER NAME	RANGE	UNITS	STEP	FORMAT	DEFAULT
4484	...Repeated for CT Bank 2					
4488	...Repeated for CT Bank 3					
448C	...Repeated for CT Bank 4					
4490	...Repeated for CT Bank 5					
4494	...Repeated for CT Bank 6					
VT Settings (Read/Write Setting) (6 modules)						
4500	Phase VT 1 Connection	0 to 1	---	1	F100	0 (Wye)
4501	Phase VT 1 Secondary	25 to 240	V	0.1	F001	664
4502	Phase VT 1 Ratio	1 to 24000	:1	1	F060	1
4504	Auxiliary VT 1 Connection	0 to 6	---	1	F166	1 (Vag)
4505	Auxiliary VT 1 Secondary	25 to 240	V	0.1	F001	664
4506	Auxiliary VT 1 Ratio	1 to 24000	:1	1	F060	1
4508	...Repeated for VT Bank 2					
4510	...Repeated for VT Bank 3					
4518	...Repeated for VT Bank 4					
4520	...Repeated for VT Bank 5					
4528	...Repeated for VT Bank 6					
Source Settings (Read/Write Setting) (4 modules)						
4580	Source 1 Name	0 to 1	---	1	F206	“SRC 1"
4583	Source 1 Phase CT	0 to 63	---	1	F400	0
4584	Source 1 Ground CT	0 to 63	---	1	F400	0
4585	Source 1 Phase VT	0 to 63	---	1	F400	0
4586	Source 1 Auxiliary VT	0 to 63	---	1	F400	0
4587	...Repeated for Source 2					
458E	...Repeated for Source 3					
4595	...Repeated for Source 4					
Power System (Read/Write Setting)						
4600	Nominal Frequency	25 to 60	Hz	1	F001	60
4601	Phase Rotation	0 to 1	---	1	F106	0 (ABC)
4602	Frequency and Phase Reference	0 to 5	---	1	F167	0 (SRC 1)
4603	Frequency Tracking Function	0 to 1	---	1	F102	1 (Enabled)
4604	Reverse Phase Rotation	0 to 4294967295	---	1	F300	0
Breaker Control (Read/Write Settings) (4 modules)						
47D0	Breaker 1 Function	0 to 1	---	1	F102	0 (Disabled)
47D1	Breaker 1 Name	---	---	---	F206	“Bkr 1"
47D4	Breaker 1 Mode	0 to 1	---	1	F157	0 (3-Pole)
47D5	Breaker 1 Open	0 to 4294967295	---	1	F300	0
47D7	Breaker 1 Close	0 to 4294967295	---	1	F300	0
47D9	Breaker 1 Phase A / Three-pole Closed	0 to 4294967295	---	1	F300	0
47DB	Breaker 1 Phase B Closed	0 to 4294967295	---	1	F300	0
47DD	Breaker 1 Phase C Closed	0 to 4294967295	---	1	F300	0
47DF	Breaker 1 External Alarm	0 to 4294967295	---	1	F300	0
47E1	Breaker 1 Alarm Delay	0 to 65.535	s	0.001	F003	0
47E3	Breaker 1 Pushbutton Control	0 to 1	---	1	F102	0 (Disabled)
47E4	Breaker 1 Manual Close Recall Time	0 to 65.535	s	0.001	F003	0
47E6	Breaker 1 Out of Service	0 to 4294967295	---	1	F300	0
47E8	Breaker 1 Block Open	0 to 4294967295	---	1	F300	0
47EA	Breaker 1 Block Close	0 to 4294967295	---	1	F300	0
47EC	Breaker 1 Phase A / Three-pole Opened	0 to 4294967295	---	1	F300	0
47EE	Breaker 1 Phase B Opened	0 to 4294967295	---	1	F300	0
47F0	Breaker 1 Phase C Opened	0 to 4294967295	---	1	F300	0
47F2	Breaker 1 Operate Time	0 to 65.535	s	0.001	F001	70
47F3	Breaker 1 Events	0 to 1	---	1	F102	0 (Disabled)
47F4	Reserved	0 to 65535	s	1	F001	0

Table B–10: MODBUS MEMORY MAP (Sheet 27 of 72)

ADDR	REGISTER NAME	RANGE	UNITS	STEP	FORMAT	DEFAULT
47F5	...Repeated for Breaker 2					
481A	...Repeated for Breaker 3					
483F	...Repeated for Breaker 4					
FlexCurves A and B (Read/Write Settings)						
4910	FlexCurve A (120 items)	0 to 65535	ms	1	F011	0
4988	FlexCurve B (120 items)	0 to 65535	ms	1	F011	0
Modbus User Map (Read/Write Setting)						
4A00	Modbus Address Settings for User Map (256 items)	0 to 65535	---	1	F001	0
User Displays Settings (Read/Write Setting) (16 modules)						
4C00	User-Definable Display 1 Top Line Text	---	---	---	F202	" "
4C0A	User-Definable Display 1 Bottom Line Text	---	---	---	F202	" "
4C14	Modbus Addresses of Display 1 Items (5 items)	0 to 65535	---	1	F001	0
4C19	Reserved (7 items)	---	---	---	F001	0
4C20	...Repeated for User-Definable Display 2					
4C40	...Repeated for User-Definable Display 3					
4C60	...Repeated for User-Definable Display 4					
4C80	...Repeated for User-Definable Display 5					
4CA0	...Repeated for User-Definable Display 6					
4CC0	...Repeated for User-Definable Display 7					
4CE0	...Repeated for User-Definable Display 8					
4D00	...Repeated for User-Definable Display 9					
4D20	...Repeated for User-Definable Display 10					
4D40	...Repeated for User-Definable Display 11					
4D60	...Repeated for User-Definable Display 12					
4D80	...Repeated for User-Definable Display 13					
4DA0	...Repeated for User-Definable Display 14					
4DC0	...Repeated for User-Definable Display 15					
4DE0	...Repeated for User-Definable Display 16					
Field Unit Raw Data Actuals (Read Only) (8 modules)						
4E00	Raw Field Data AC1 Mag	0 to 0.001	A	0.001	F003	0
4E02	Raw Field Data AC1 Angle	0 to 0.1	degree	0.1	F002	0
4E03	Raw Field Data AC2 Mag	0 to 0.001	A	0.001	F003	0
4E05	Raw Field Data AC2 Angle	0 to 0.1	degree	0.1	F002	0
4E06	Raw Field Data AC3 Mag	0 to 0.001	A	0.001	F003	0
4E08	Raw Field Data AC3 Angle	0 to 0.1	degree	0.1	F002	0
4E09	Raw Field Data AC4 Mag	0 to 0.001	A	0.001	F003	0
4E0B	Raw Field Data AC4 Angle	0 to 0.1	degree	0.1	F002	0
4E0C	Raw Field Data AC5 Mag	0 to 0.001	A/V	0.001	F003	0
4E0E	Raw Field Data AC5 Angle	0 to 0.1	degree	0.1	F002	0
4E0F	Raw Field Data AC6 Mag	0 to 0.001	A/V	0.001	F003	0
4E11	Raw Field Data AC6 Angle	0 to 0.1	degree	0.1	F002	0
4E12	Raw Field Data AC7 Mag	0 to 0.001	A/V	0.001	F003	0
4E14	Raw Field Data AC7 Angle	0 to 0.1	degree	0.1	F002	0
4E15	Raw Field Data AC8 Mag	0 to 0.001	A/V	0.001	F003	0
4E17	Raw Field Data AC8 Angle	0 to 0.1	degree	0.1	F002	0
4E18	Raw Field Data DC1	0 to 0.001	V	0.001	F002	0
4E19	Raw Field Data DC2	0 to 0.001	V	0.001	F002	0
4E1A	Raw Field Data DC3	0 to 0.001	V	0.001	F002	0
4E1B	Raw Field Data FCI States (2 items)	0 to 1	---	1	F500	0
4E1D	Raw Field Data SI States	0 to 1	---	1	F500	0
4E1E	Raw Field Data SI Test States	0 to 1	---	1	F500	0
4E1F	Raw Field Data Brick ADC Temperature	0 to 1	degree	1	F002	0
4E20	Raw Field Data Brick Transceiver Temperature	0 to 1	degree	1	F002	0
4E21	Raw Field Data Brick Transceiver Voltage	0 to 0.01	V	0.01	F001	0

Table B–10: MODBUS MEMORY MAP (Sheet 28 of 72)

ADDR	REGISTER NAME	RANGE	UNITS	STEP	FORMAT	DEFAULT
4E22	Raw Field Data Brick Transceiver Current	0 to 1	mA	1	F001	0
4E23	Raw Field Data Brick Tx Power	0 to 0.1	dBm	0.1	F002	0
4E24	Raw Field Data Brick Rx Power	0 to 0.1	dBm	0.1	F002	0
4E25	Raw Field Data Brick Diagnostics (2 items)	0 to 65535	---	1	F500	0
4E27	Raw Field Data Local Transceiver Temperature	0 to 1	degree	1	F002	0
4E28	Raw Field Data Local Transceiver Voltage	0 to 0.01	V	0.01	F001	0
4E29	Raw Field Data Local Transceiver Current	0 to 1	mA	1	F001	0
4E2A	Raw Field Data Local Tx Power	0 to 0.1	dBm	0.1	F002	0
4E2B	Raw Field Data Local Rx Power	0 to 0.1	dBm	0.1	F002	0
4E2C	Repeated for Field Unit 2					
4E58	Repeated for Field Unit 3					
4E84	Repeated for Field Unit 4					
4EB0	Repeated for Field Unit 5					
4EDC	Repeated for Field Unit 6					
4F08	Repeated for Field Unit 7					
4F34	Repeated for Field Unit 8					
FlexLogic (Read/Write Setting)						
5000	FlexLogic Entry (512 items)	0 to 4294967295	---	1	F300	2097152
RTD Inputs (Read/Write Setting) (48 modules)						
5400	RTD Input 1 Function	0 to 1	---	1	F102	0 (Disabled)
5401	RTD Input 1 ID	---	---	---	F205	“RTD Ip 1“
5407	RTD Input 1 Type	0 to 3	---	1	F174	0 (100 ohm Platinum)
5408	RTD Input 1 Application	0 to 5	---	1	F550	0 (None)
5409	RTD Input 1 Alarm Temperature	1 to 249	°C	1	F001	130
540A	RTD Input 1 Alarm Pickup Delay	0 to 600	s	0.01	F001	0
540B	RTD Input 1 Trip Temperature	1 to 249	°C	1	F001	130
540C	RTD Input 1 Trip Pickup Delay	0 to 600	s	0.01	F001	0
540D	RTD Input 1 Trip Reset Delay	0 to 600	s	0.01	F001	0
540E	RTD Input 1 Trip Voting	0 to 48	---	1	F551	0
540F	RTD Input 1 Open	0 to 2	---	1	F552	0 (None)
5410	RTD Input 1 Block	0 to 4294967295	---	1	F300	0
5412	RTD Input 1 Target	0 to 2	---	1	F109	0 (Self-reset)
5413	RTD Input 1 Events	0 to 1	---	1	F102	0 (Disabled)
5414	...Repeated for RTD Input 2					
5428	...Repeated for RTD Input 3					
543C	...Repeated for RTD Input 4					
5450	...Repeated for RTD Input 5					
5464	...Repeated for RTD Input 6					
5478	...Repeated for RTD Input 7					
548C	...Repeated for RTD Input 8					
54A0	...Repeated for RTD Input 9					
54B4	...Repeated for RTD Input 10					
54C8	...Repeated for RTD Input 11					
54DC	...Repeated for RTD Input 12					
54F0	...Repeated for RTD Input 13					
5504	...Repeated for RTD Input 14					
5518	...Repeated for RTD Input 15					
552C	...Repeated for RTD Input 16					
5540	...Repeated for RTD Input 17					
5554	...Repeated for RTD Input 18					
5568	...Repeated for RTD Input 19					
557C	...Repeated for RTD Input 20					
5590	...Repeated for RTD Input 21					

Table B–10: MODBUS MEMORY MAP (Sheet 29 of 72)

ADDR	REGISTER NAME	RANGE	UNITS	STEP	FORMAT	DEFAULT
55A4	...Repeated for RTD Input 22					
55B8	...Repeated for RTD Input 23					
55CC	...Repeated for RTD Input 24					
55E0	...Repeated for RTD Input 25					
55F4	...Repeated for RTD Input 26					
5608	...Repeated for RTD Input 27					
561C	...Repeated for RTD Input 28					
5630	...Repeated for RTD Input 29					
5644	...Repeated for RTD Input 30					
5658	...Repeated for RTD Input 31					
566C	...Repeated for RTD Input 32					
5680	...Repeated for RTD Input 33					
5694	...Repeated for RTD Input 34					
56A8	...Repeated for RTD Input 35					
56BC	...Repeated for RTD Input 36					
56D0	...Repeated for RTD Input 37					
56E4	...Repeated for RTD Input 38					
56F8	...Repeated for RTD Input 39					
570C	...Repeated for RTD Input 40					
5720	...Repeated for RTD Input 41					
5734	...Repeated for RTD Input 42					
5748	...Repeated for RTD Input 43					
575C	...Repeated for RTD Input 44					
5770	...Repeated for RTD Input 45					
5784	...Repeated for RTD Input 46					
5798	...Repeated for RTD Input 47					
57AC	...Repeated for RTD Input 48					
FlexLogic Timers (Read/Write Setting) (32 modules)						
5800	FlexLogic Timer 1 Type	0 to 2	---	1	F129	0 (millisecond)
5801	FlexLogic Timer 1 Pickup Delay	0 to 60000	---	1	F001	0
5802	FlexLogic Timer 1 Dropout Delay	0 to 60000	---	1	F001	0
5803	Reserved (5 items)	0 to 65535	---	1	F001	0
5808	...Repeated for FlexLogic Timer 2					
5810	...Repeated for FlexLogic Timer 3					
5818	...Repeated for FlexLogic Timer 4					
5820	...Repeated for FlexLogic Timer 5					
5828	...Repeated for FlexLogic Timer 6					
5830	...Repeated for FlexLogic Timer 7					
5838	...Repeated for FlexLogic Timer 8					
5840	...Repeated for FlexLogic Timer 9					
5848	...Repeated for FlexLogic Timer 10					
5850	...Repeated for FlexLogic Timer 11					
5858	...Repeated for FlexLogic Timer 12					
5860	...Repeated for FlexLogic Timer 13					
5868	...Repeated for FlexLogic Timer 14					
5870	...Repeated for FlexLogic Timer 15					
5878	...Repeated for FlexLogic Timer 16					
5880	...Repeated for FlexLogic Timer 17					
5888	...Repeated for FlexLogic Timer 18					
5890	...Repeated for FlexLogic Timer 19					
5898	...Repeated for FlexLogic Timer 20					
58A0	...Repeated for FlexLogic Timer 21					
58A8	...Repeated for FlexLogic Timer 22					
58B0	...Repeated for FlexLogic Timer 23					

Table B–10: MODBUS MEMORY MAP (Sheet 30 of 72)

ADDR	REGISTER NAME	RANGE	UNITS	STEP	FORMAT	DEFAULT
58B8	...Repeated for FlexLogic Timer 24					
58C0	...Repeated for FlexLogic Timer 25					
58C8	...Repeated for FlexLogic Timer 26					
58D0	...Repeated for FlexLogic Timer 27					
58D8	...Repeated for FlexLogic Timer 28					
58E0	...Repeated for FlexLogic Timer 29					
58E8	...Repeated for FlexLogic Timer 30					
58F0	...Repeated for FlexLogic Timer 31					
58F8	...Repeated for FlexLogic Timer 32					
Phase Time Overcurrent (Read/Write Grouped Setting						
5900	Phase Time Overcurrent 1 Function	0 to 1	---	1	F102	0 (Disabled)
5901	Phase Time Overcurrent 1 Signal Source	0 to 5	---	1	F167	0 (SRC 1)
5902	Phase Time Overcurrent 1 Input	0 to 1	---	1	F122	0 (Phasor)
5903	Phase Time Overcurrent 1 Pickup	0 to 30	pu	0.001	F001	1000
5904	Phase Time Overcurrent 1 Curve	0 to 16	---	1	F103	0 (IEEE Mod Inv)
5905	Phase Time Overcurrent 1 Multiplier	0 to 600	---	0.01	F001	100
5906	Phase Time Overcurrent 1 Reset	0 to 1	---	1	F104	0 (Instantaneous)
5907	Phase Time Overcurrent 1 Voltage Restraint	0 to 1	---	1	F102	0 (Disabled)
5908	Phase TOC 1 Block For Each Phase (3 items)	0 to 4294967295	---	1	F300	0
590F	Phase Time Overcurrent 1 Target	0 to 2	---	1	F109	0 (Self-reset)
5910	Phase Time Overcurrent 1 Events	0 to 1	---	1	F102	0 (Disabled)
5911	Reserved (3 items)	0 to 1	---	1	F001	0
Phase Instantaneous Overcurrent (Read/Write Grouped Setting) (2 modules)						
5A00	Phase Instantaneous Overcurrent 1 Function	0 to 1	---	1	F102	0 (Disabled)
5A01	Phase Instantaneous Overcurrent 1 Signal Source	0 to 5	---	1	F167	0 (SRC 1)
5A02	Phase Instantaneous Overcurrent 1 Pickup	0 to 30	pu	0.001	F001	1000
5A03	Phase Instantaneous Overcurrent 1 Delay	0 to 600	s	0.01	F001	0
5A04	Phase Instantaneous Overcurrent 1 Reset Delay	0 to 600	s	0.01	F001	0
5A05	Phase IOC1 Block For Each Phase (3 items)	0 to 4294967295	---	1	F300	0
5A0B	Phase Instantaneous Overcurrent 1 Target	0 to 2	---	1	F109	0 (Self-reset)
5A0C	Phase Instantaneous Overcurrent 1 Events	0 to 1	---	1	F102	0 (Disabled)
5A0D	Reserved (6 items)	0 to 1	---	1	F001	0
5A13	...Repeated for Phase Instantaneous Overcurrent 2					
Neutral Time Overcurrent (Read/Write Grouped Setting)						
5B00	Neutral Time Overcurrent 1 Function	0 to 1	---	1	F102	0 (Disabled)
5B01	Neutral Time Overcurrent 1 Signal Source	0 to 5	---	1	F167	0 (SRC 1)
5B02	Neutral Time Overcurrent 1 Input	0 to 1	---	1	F122	0 (Phasor)
5B03	Neutral Time Overcurrent 1 Pickup	0 to 30	pu	0.001	F001	1000
5B04	Neutral Time Overcurrent 1 Curve	0 to 16	---	1	F103	0 (IEEE Mod Inv)
5B05	Neutral Time Overcurrent 1 Multiplier	0 to 600	---	0.01	F001	100
5B06	Neutral Time Overcurrent 1 Reset	0 to 1	---	1	F104	0 (Instantaneous)
5B07	Neutral Time Overcurrent 1 Block	0 to 4294967295	---	1	F300	0
5B09	Neutral Time Overcurrent 1 Target	0 to 2	---	1	F109	0 (Self-reset)
5B0A	Neutral Time Overcurrent 1 Events	0 to 1	---	1	F102	0 (Disabled)
5B0B	Reserved (6 items)	0 to 1	---	1	F001	0
Neutral Instantaneous Overcurrent (Read/Write Grouped Setting)						
5C00	Neutral Instantaneous Overcurrent 1 Function	0 to 1	---	1	F102	0 (Disabled)
5C01	Neutral Instantaneous Overcurrent 1 Signal Source	0 to 5	---	1	F167	0 (SRC 1)
5C02	Neutral Instantaneous Overcurrent 1 Pickup	0 to 30	pu	0.001	F001	1000
5C03	Neutral Instantaneous Overcurrent 1 Delay	0 to 600	s	0.01	F001	0
5C04	Neutral Instantaneous Overcurrent 1 Reset Delay	0 to 600	s	0.01	F001	0
5C05	Neutral Instantaneous Overcurrent 1 Block	0 to 4294967295	---	1	F300	0
5C07	Neutral Instantaneous Overcurrent 1 Target	0 to 2	---	1	F109	0 (Self-reset)
5C08	Neutral Instantaneous Overcurrent 1 Events	0 to 1	---	1	F102	0 (Disabled)

Table B–10: MODBUS MEMORY MAP (Sheet 31 of 72)

ADDR	REGISTER NAME	RANGE	UNITS	STEP	FORMAT	DEFAULT
5C09	Reserved (8 items)	0 to 1	---	1	F001	0
Ground Time Overcurrent (Read/Write Grouped Setting) (1 module)						
5D00	Ground Time Overcurrent 1 Function	0 to 1	---	1	F102	0 (Disabled)
5D01	Ground Time Overcurrent 1 Signal Source	0 to 5	---	1	F167	0 (SRC 1)
5D02	Ground Time Overcurrent 1 Input	0 to 1	---	1	F122	0 (Phasor)
5D03	Ground Time Overcurrent 1 Pickup	0 to 30	pu	0.001	F001	1000
5D04	Ground Time Overcurrent 1 Curve	0 to 16	---	1	F103	0 (IEEE Mod Inv)
5D05	Ground Time Overcurrent 1 Multiplier	0 to 600	---	0.01	F001	100
5D06	Ground Time Overcurrent 1 Reset	0 to 1	---	1	F104	0 (Instantaneous)
5D07	Ground Time Overcurrent 1 Block	0 to 4294967295	---	1	F300	0
5D09	Ground Time Overcurrent 1 Target	0 to 2	---	1	F109	0 (Self-reset)
5D0A	Ground Time Overcurrent 1 Events	0 to 1	---	1	F102	0 (Disabled)
5D0B	Reserved (6 items)	0 to 1	---	1	F001	0
Ground Instantaneous Overcurrent (Read/Write Grouped Setting) (1 module)						
5DA0	Ground Instantaneous Overcurrent 1 Function	0 to 1	---	1	F102	0 (Disabled)
5DA1	Ground Instantaneous Overcurrent 1 Signal Source	0 to 5	---	1	F167	0 (SRC 1)
5DA2	Ground Instantaneous Overcurrent 1 Pickup	0 to 30	pu	0.001	F001	1000
5DA3	Ground Instantaneous Overcurrent 1 Delay	0 to 600	s	0.01	F001	0
5DA4	Ground Instantaneous Overcurrent 1 Reset Delay	0 to 600	s	0.01	F001	0
5DA5	Ground Instantaneous Overcurrent 1 Block	0 to 4294967295	---	1	F300	0
5DA7	Ground Instantaneous Overcurrent 1 Target	0 to 2	---	1	F109	0 (Self-reset)
5DA8	Ground Instantaneous Overcurrent 1 Events	0 to 1	---	1	F102	0 (Disabled)
5DA9	Reserved (8 items)	0 to 1	---	1	F001	0
CT Fail (Read/Write Setting) (4 modules)						
5E6C	CT Fail 1 Function	0 to 1	---	1	F102	0 (Disabled)
5E6D	CT Fail 1 Block	0 to 4294967295	---	1	F300	0
5E6F	CT Fail 1 Current Source 1	0 to 5	---	1	F167	0 (SRC 1)
5E70	CT Fail 1 Current Pickup 1	0 to 2	pu	0.1	F001	2
5E71	CT Fail 1 Current Source 2	0 to 5	---	1	F167	1 (SRC 2)
5E72	CT Fail 1 Current Pickup 2	0 to 2	pu	0.1	F001	2
5E73	CT Fail 1 Voltage Source	0 to 5	---	1	F167	0 (SRC 1)
5E74	CT Fail 1 Voltage Pickup	0 to 2	pu	0.01	F001	20
5E75	CT Fail 1 Pickup Delay	0 to 65.535	s	0.001	F001	1000
5E76	CT Fail 1 Target	0 to 2	---	1	F109	0 (Self-reset)
5E77	CT Fail 1 Events	0 to 1	---	1	F102	0 (Disabled)
5E78	...Repeated for CT Fail 2					
5E84	...Repeated for CT Fail 3					
5E90	...Repeated for CT Fail 4					
Frequency Out-Of-Band Accumulation (Read/Write Setting)						
5F40	Frequency Out-Of-Band Accumulation Block	0 to 4294967295	---	1	F300	0
5F42	Frequency Out-Of-Band Accumulation Events Enable	0 to 1	---	1	F102	0 (Disabled)
5F43	Frequency Out-Of-Band Accumulator Function Enable Array (7 items)	0 to 1	---	1	F102	0 (Disabled)
5F4A	Frequency Out-Of-Band Accumulator Lower Frequency Array (7 items)	20 to 70	Hz	0.01	F001	6000
5F51	Frequency Out-Of-Band Accumulator Min Value V A	0.1 to 1.25	pu	0.01	F001	10
5F52	Frequency Out-Of-Band Accumulator Source	0 to 5	---	1	F167	0 (SRC 1)
5F53	Frequency Out-Of-Band Accumulator Target Messages Enable	0 to 2	---	1	F109	0 (Self-reset)
5F54	Frequency Out-Of-Band Accumulator Time Limit Array (7 items)	1 to 65535	sec	1	F001	200
5F5B	Frequency Out-Of-Band Accumulator Time Preset Array (7 items)	0 to 65535	sec	1	F001	0
5F62	Frequency Out-Of-Band Accumulator Upper Frequency Array (7 items)	20 to 70	Hz	0.01	F001	6000

Table B–10: MODBUS MEMORY MAP (Sheet 32 of 72)

ADDR	REGISTER NAME	RANGE	UNITS	STEP	FORMAT	DEFAULT
Setting Groups (Read/Write Setting)						
5F70	Setting Group for Modbus Comms (0 means group 1)	0 to 5	---	1	F001	0
5F71	Setting Groups Block	0 to 4294967295	---	1	F300	0
5F73	FlexLogic Operands to Activate Groups 2 through 6 (5 items)	0 to 4294967295	---	1	F300	0
5F7D	Setting Group Function	0 to 1	---	1	F102	0 (Disabled)
5F7E	Setting Group Events	0 to 1	---	1	F102	0 (Disabled)
Setting Groups (Read Only)						
5F7F	Current Setting Group	0 to 5	---	1	F001	0
Setting Group Names (Read/Write Setting)						
5F8C	Setting Group 1 Name	---	---	---	F203	(none)
5F94	Setting Group 2 Name	---	---	---	F203	(none)
5F9C	Setting Group 3 Name	---	---	---	F203	(none)
5FA4	Setting Group 4 Name	---	---	---	F203	(none)
5FAC	Setting Group 5 Name	---	---	---	F203	(none)
5FB4	Setting Group 6 Name	---	---	---	F203	(none)
Stator Differential (Read/Write Grouped Setting)						
6420	Stator Differential Function	0 to 1	---	1	F102	0 (Disabled)
6421	Stator Differential Pickup	0.05 to 1	pu	0.001	F001	100
6422	Stator Differential Slope 1	1 to 100	%	1	F001	10
6423	Stator Differential Slope 2	1 to 100	%	1	F001	80
6424	Stator Differential Break 1	1 to 1.5	pu	0.01	F001	115
6425	Stator Differential Break 2	1.5 to 30	pu	0.01	F001	800
6426	Stator Differential Block	0 to 4294967295	---	1	F300	0
6428	Stator Differential Targets	0 to 2	---	1	F109	0 (Self-reset)
6429	Stator Differential Events	0 to 1	---	1	F102	0 (Disabled)
642A	Stator Differential Line End Source	0 to 5	---	1	F167	0 (SRC 1)
642B	Stator Differential Neutral End Source	0 to 5	---	1	F167	0 (SRC 1)
Negative Sequence Overvoltage (Read/Write Grouped Setting) (3 modules)						
6440	Negative Sequence Overvoltage 1 Function	0 to 1	---	1	F102	0 (Disabled)
6441	Negative Sequence Overvoltage 1 Source	0 to 5	---	1	F167	0 (SRC 1)
6442	Negative Sequence Overvoltage 1 Pickup	0 to 1.25	pu	0.001	F001	300
6443	Negative Sequence Overvoltage 1 Pickup Delay	0 to 600	s	0.01	F001	50
6444	Negative Sequence Overvoltage 1 Reset Delay	0 to 600	s	0.01	F001	50
6445	Negative Sequence Overvoltage 1 Block	0 to 4294967295	---	1	F300	0
6447	Negative Sequence Overvoltage 1 Target	0 to 2	---	1	F109	0 (Self-reset)
6448	Negative Sequence Overvoltage 1 Events	0 to 1	---	1	F102	0 (Disabled)
6449	...Repeated for Negative Sequence Overvoltage 2					
6452	...Repeated for Negative Sequence Overvoltage 3					
Overfrequency (Read/Write Setting) (4 modules)						
6470	Overfrequency 1 Function	0 to 1	---	1	F102	0 (Disabled)
6471	Overfrequency 1 Block	0 to 4294967295	---	1	F300	0
6473	Overfrequency 1 Source	0 to 5	---	1	F167	0 (SRC 1)
6474	Overfrequency 1 Pickup	20 to 65	Hz	0.01	F001	6050
6475	Overfrequency 1 Pickup Delay	0 to 65.535	s	0.001	F001	500
6476	Overfrequency 1 Reset Delay	0 to 65.535	s	0.001	F001	500
6477	Overfrequency 1 Target	0 to 2	---	1	F109	0 (Self-reset)
6478	Overfrequency 1 Events	0 to 1	---	1	F102	0 (Disabled)
6479	Reserved (4 items)	0 to 1	---	1	F001	0
647D	...Repeated for Overfrequency 2					
648A	...Repeated for Overfrequency 3					
6497	...Repeated for Overfrequency 4					
Power Swing Detect (Read/Write Grouped Setting)						
65C0	Power Swing Detect Function	0 to 1	---	1	F102	0 (Disabled)

Table B–10: MODBUS MEMORY MAP (Sheet 33 of 72)

ADDR	REGISTER NAME	RANGE	UNITS	STEP	FORMAT	DEFAULT
65C1	Power Swing Detect Source	0 to 5	---	1	F167	0 (SRC 1)
65C2	Power Swing Detect Mode	0 to 1	---	1	F513	0 (Two Step)
65C3	Power Swing Detect Supervision	0.05 to 30	pu	0.001	F001	600
65C4	Power Swing Detect Forward Reach	0.1 to 500	ohms	0.01	F001	5000
65C5	Power Swing Detect Forward RCA	40 to 90	degrees	1	F001	75
65C6	Power Swing Detect Reverse Reach	0.1 to 500	ohms	0.01	F001	5000
65C7	Power Swing Detect Reverse RCA	40 to 90	degrees	1	F001	75
65C8	Power Swing Detect Outer Limit Angle	40 to 140	degrees	1	F001	120
65C9	Power Swing Detect Middle Limit Angle	40 to 140	degrees	1	F001	90
65CA	Power Swing Detect Inner Limit Angle	40 to 140	degrees	1	F001	60
65CB	Power Swing Detect Delay 1 Pickup	0 to 65.535	s	0.001	F001	30
65CC	Power Swing Detect Delay 1 Reset	0 to 65.535	s	0.001	F001	50
65CD	Power Swing Detect Delay 2 Pickup	0 to 65.535	s	0.001	F001	17
65CE	Power Swing Detect Delay 3 Pickup	0 to 65.535	s	0.001	F001	9
65CF	Power Swing Detect Delay 4 Pickup	0 to 65.535	s	0.001	F001	17
65D0	Power Swing Detect Seal In Delay	0 to 65.535	s	0.001	F001	400
65D1	Power Swing Detect Trip Mode	0 to 1	---	1	F514	0 (Delayed)
65D2	Power Swing Detect Block	0 to 4294967295	---	1	F300	0
65D4	Power Swing Detect Target	0 to 2	---	1	F109	0 (Self-reset)
65D5	Power Swing Detect Event	0 to 1	---	1	F102	0 (Disabled)
65D6	Power Swing Detect Shape	0 to 1	---	1	F085	0 (Mho Shape)
65D7	Power Swing Detect Quad Forward Middle	0.1 to 500	ohms	0.01	F001	6000
65D8	Power Swing Detect Quad Forward Outer	0.1 to 500	ohms	0.01	F001	7000
65D9	Power Swing Detect Quad Reverse Middle	0.1 to 500	ohms	0.01	F001	6000
65DA	Power Swing Detect Quad Reverse Outer	0.1 to 500	ohms	0.01	F001	7000
65DB	Power Swing Detect Outer Right Blinder	0.1 to 500	ohms	0.01	F001	10000
65DC	Power Swing Detect Outer Left Blinder	0.1 to 500	ohms	0.01	F001	10000
65DD	Power Swing Detect Middle Right Blinder	0.1 to 500	ohms	0.01	F001	10000
65DE	Power Swing Detect Middle Left Blinder	0.1 to 500	ohms	0.01	F001	10000
65DF	Power Swing Detect Inner Right Blinder	0.1 to 500	ohms	0.01	F001	10000
65E0	Power Swing Detect Inner Left Blinder	0.1 to 500	ohms	0.01	F001	10000
65E1	Power Swing I2 Supervision Enable	0 to 4294967295	---	1	F300	0
65E3	Power Swing I2 Supervision	0.05 to 30	pu	0.001	F001	200
Field Ground Actual Values (Read Only)						
6640	Field Ground Resistance	0 to 20000	KOhm	0.001	F003	20000000
6642	Field Ground Current	0 to 655.35	mA	0.01	F001	0
6643	Field Ground Injected Voltage	-32.767 to 32.767	V	0.001	F002	0
6644	Field Ground Fault Location	-30000 to 30000	%	1	F002	-10
6645	Field Ground Field Voltage	-3276.8 to 3276.7	V	0.1	F002	0
6646	Field Current	-9999.999 to 9999.999	---	0.001	F004	0
6648	Field Current Units	---	---	---	F206	"A"
Accidental Energization (Read/Write Grouped Setting)						
6650	Accidental Energization Function	0 to 1	---	1	F102	0 (Disabled)
6651	Accidental Energization Source	0 to 5	---	1	F167	0 (SRC 1)
6652	Accidental Energization Arming Mode	0 to 1	---	1	F193	0 (UV AND OFFLINE)
6653	Accidental Energization OC Pickup	0 to 3	pu	0.001	F003	300
6655	Accidental Energization UV Pickup	0 to 3	pu	0.001	F003	500
6657	Accidental Energization Offline	0 to 4294967295	---	1	F300	0
6659	Accidental Energization Block	0 to 4294967295	---	1	F300	0
665B	Accidental Energization Target	0 to 2	---	1	F109	0 (Self-reset)
665C	Accidental Energization Events	0 to 1	---	1	F102	0 (Disabled)
665D	Reserved (5 items)	0 to 65535	---	1	F001	0

Table B–10: MODBUS MEMORY MAP (Sheet 34 of 72)

ADDR	REGISTER NAME	RANGE	UNITS	STEP	FORMAT	DEFAULT
Loss of Excitation (Read/Write Grouped Setting)						
666A	Loss Of Excitation Function	0 to 1	---	1	F102	0 (Disabled)
666B	Loss Of Excitation Signal Source	0 to 5	---	1	F167	0 (SRC 1)
666C	Loss Of Excitation Center 1	0.1 to 300	ohm	0.01	F001	1000
666D	Loss Of Excitation Radius 1	0.1 to 300	ohm	0.01	F001	800
666E	Loss Of Excitation UV Supervision Enable 1	0 to 1	---	1	F102	1 (Enabled)
666F	Loss Of Excitation Pickup Delay 1	0 to 65.535	s	0.001	F001	50
6670	Loss Of Excitation Center 2	0.1 to 300	ohm	0.01	F001	1200
6671	Loss Of Excitation Radius 2	0.1 to 300	ohm	0.01	F001	1000
6672	Loss Of Excitation UV Supervision Enable 2	0 to 1	---	1	F102	1 (Enabled)
6673	Loss Of Excitation Pickup Delay 2	0 to 65.535	s	0.001	F001	500
6674	Loss Of Excitation UV Supervision	0 to 1.25	pu	0.001	F001	700
6675	Loss Of Excitation Block	0 to 4294967295	---	1	F300	0
6677	Loss Of Excitation Target	0 to 2	---	1	F109	0 (Self-reset)
6678	Loss Of Excitation Events	0 to 1	---	1	F102	0 (Disabled)
6679	Reserved (5 items)	0 to 65535	---	1	F001	0
Sensitive Directional Power (Read/Write Grouped Setting) (2 modules)						
6680	Sensitive Directional Power 1 Function	0 to 1	---	1	F102	0 (Disabled)
6681	Sensitive Directional Power 1 Signal Source	0 to 5	---	1	F167	0 (SRC 1)
6682	Sensitive Directional Power 1 RCA	0 to 359	degrees	1	F001	0
6683	Sensitive Directional Power 1 Calibration	0 to 0.95	degrees	0.05	F001	0
6684	Sensitive Directional Power 1 STG1 SMIN	-1.2 to 1.2	pu	0.001	F002	100
6685	Sensitive Directional Power 1 STG1 Delay	0 to 600	s	0.01	F001	50
6686	Sensitive Directional Power 1 STG2 SMIN	-1.2 to 1.2	pu	0.001	F002	100
6687	Sensitive Directional Power 1 STG2 Delay	0 to 600	s	0.01	F001	2000
6688	Sensitive Directional Power 1 Block	0 to 4294967295	---	1	F300	0
668A	Sensitive Directional Power 1 Target	0 to 2	---	1	F109	0 (Self-reset)
668B	Sensitive Directional Power 1 Events	0 to 1	---	1	F102	0 (Disabled)
668C	Reserved (5 items)	0 to 65535	---	1	F001	0
6691	...Repeated for Sensitive Directional Power 2					
Third Harmonic Neutral Undervoltage (Read/Write Grouped Setting)						
66DA	Third Harmonic Neutral Undervoltage Function	0 to 1	---	1	F102	0 (Disabled)
66DB	Third Harmonic Neutral Undervoltage Pickup	0 to 3	pu	0.0001	F003	3000
66DD	Third Harmonic Neutral Undervoltage Delay	0 to 600	s	0.01	F001	0
66DE	Third Harmonic Neutral Undervoltage Max Power	0 to 1.25	pu	0.001	F003	200
66E0	Third Harmonic Neutral Undervoltage Min Power	0 to 1.25	pu	0.001	F003	200
66E2	Third Harmonic Neutral Undervoltage Volt Supervision	0 to 1.25	pu	0.001	F001	500
66E3	Third Harmonic Neutral Undervoltage Block	0 to 4294967295	---	1	F300	0
66E5	Third Harmonic Neutral Undervoltage Target	0 to 2	---	1	F109	0 (Self-reset)
66E6	Third Harmonic Neutral Undervoltage Events	0 to 1	---	1	F102	0 (Disabled)
66E7	Reserved (4 items)	0 to 65535	---	1	F001	0
Generator Unbalance (Read/Write Grouped Setting)						
66F0	Generator Unbalance Function	0 to 1	---	1	F102	0 (Disabled)
66F1	Generator Unbalance Source	0 to 5	---	1	F167	0 (SRC 1)
66F2	Generator Unbalance Inom (rated full load current of the machine)	0 to 1.25	pu	0.001	F001	800
66F3	Generator Unbalance Stage 1 Pickup	0 to 100	%	0.01	F001	800
66F4	Generator Unbalance Stage 1 K value	0 to 100	---	0.01	F001	100
66F5	Generator Unbalance Stage 1 Tmin	0 to 50	s	0.001	F001	250
66F6	Generator Unbalance Stage 1 Tmax	0 to 1000	s	0.1	F001	6000
66F7	Generator Unbalance Stage 1 K Reset	0 to 1000	s	0.1	F001	2400
66F8	Generator Unbalance Stage 2 Pickup	0 to 100	%	0.01	F001	300
66F9	Generator Unbalance Stage 2 Pickup Delay	0 to 1000	s	0.1	F001	50
66FA	Generator Unbalance Block	0 to 4294967295	---	1	F300	0

Table B–10: MODBUS MEMORY MAP (Sheet 35 of 72)

ADDR	REGISTER NAME	RANGE	UNITS	STEP	FORMAT	DEFAULT
66FC	Generator Unbalance Target	0 to 2	---	1	F109	0 (Self-reset)
66FD	Generator Unbalance Events	0 to 1	---	1	F102	0 (Disabled)
66FE	Reserved (3 items)	0 to 65535	---	1	F001	0
Stator Ground Source (Read/Write Grouped Setting)						
670A	Stator Ground Source	0 to 5	---	1	F167	0 (SRC 1)
Subharmonic Stator Ground (Read/Write Grouped Setting)						
6710	Stator Ground Function	0 to 1	---	1	F102	0 (Disabled)
6711	Stator Ground Stage 1 Pickup	1 to 20	kOhm	1	F001	10
6712	Stator Ground Stage 1 Pickup Delay	0.1 to 600	s	0.1	F001	100
6713	Stator Ground Stage 2 Pickup	1 to 20	kOhm	1	F001	3
6714	Stator Ground Stage 2 Pickup Delay	0.1 to 600	s	0.1	F001	10
6715	CT Angle Compensation	-30 to 30	degrees	0.1	F002	0
6718	Stator Ground OC Pickup	0.001 to 1	pu	0.001	F001	10
6719	Stator Ground OC Delay	0.1 to 600	s	0.01	F001	100
671A	Stator Ground Volt Supv	0 to 0.1	pu	0.001	F001	0
671B	Stator Ground Curr Supv	0 to 0.1	pu	0.001	F001	0
671C	Stator Ground Block	0 to 4294967295	---	---	F300	0
671E	Stator Ground Events	0 to 1	---	1	F102	0 (Disabled)
671F	Stator Ground Target	0 to 2	---	1	F109	0 (Self-reset)
Stator Ground (Read/Write Grouped Setting						
6720	Stator Ground Function	0 to 1	---	1	F102	0 (Disabled)
6721	Stator Ground Stage 1 Pickup	0 to 0.9	pu	0.001	F001	150
6722	Stator Ground Stage 1 Pickup Delay	0 to 600	s	0.01	F001	100
6723	Stator Ground Stage 1 Supv	0.001 to 0.1	pu	0.0001	F001	57
6724	Stator Ground Stage 2 Pickup	0 to 0.9	pu	0.001	F001	150
6725	Stator Ground Stage 2 Pickup Delay	0 to 600	s	0.01	F001	0
6726	Stator Ground Stage 2 Supv	0.001 to 0.1	pu	0.0001	F001	45
6727	Stator Ground Block	0 to 4294967295	---	---	F300	0
6729	Stator Ground Target	0 to 2	---	1	F109	0 (Self-reset)
672A	Stator Ground Event	0 to 1	---	1	F102	0 (Disabled)
672B	Reserved (5 items)	0 to 65535	---	1	F001	0
Split Phase Protection (Read/Write Grouped Setting)						
6730	Split Phase Protection Function	0 to 1	---	1	F102	0 (Disabled)
6731	Split Phase Protection Source	0 to 5	---	1	F167	0 (SRC1)
6732	Split Phase Protection Load Source	0 to 5	---	1	F167	0 (SRC1)
6733	Split Phase Protection Phase A Pickup	0.02 to 1.5	pu	0.001	F001	200
6734	Split Phase Protection Phase A Offset	0 to 1	pu	0.001	F001	0
6735	Split Phase Protection Phase A Slope	0 to 100	%	0.1	F001	0
6736	Split Phase Protection Phase B Pickup	0.02 to 1.5	pu	0.001	F001	200
6737	Split Phase Protection Phase B Offset	0 to 1	pu	0.001	F001	0
6738	Split Phase Protection Phase B Slope	0 to 100	%	0.1	F001	0
6739	Split Phase Protection Phase C Pickup	0.02 to 1.5	pu	0.001	F001	200
673A	Split Phase Protection Phase C Offset	0 to 1	pu	0.001	F001	0
673B	Split Phase Protection Phase C Slope	0 to 100	%	0.1	F001	0
673C	Split Phase Protection Minimum Load	0 to 1	pu	0.01	F001	0
673D	Split Phase Protection Mode	0 to 1	---	1	F225	0 (Over)
673E	Split Phase Protection Delay	0 to 65.535	s	0.001	F001	0
673F	Split Phase Protection Block	0 to 4294967295	---	1	F300	0
6741	Split Phase Protection Target	0 to 2	---	1	F109	0 (Self-Reset)
6742	Split Phase Protection Events	0 to 1	---	1	F102	0 (Disabled)
6743	Reserved (6 items)	0 to 65535	---	1	F001	0
Phase Undervoltage (Read/Write Grouped Setting) (3 modules)						
7000	Phase Undervoltage 1 Function	0 to 1	---	1	F102	0 (Disabled)
7001	Phase Undervoltage 1 Signal Source	0 to 5	---	1	F167	0 (SRC 1)

Table B–10: MODBUS MEMORY MAP (Sheet 36 of 72)

ADDR	REGISTER NAME	RANGE	UNITS	STEP	FORMAT	DEFAULT
7002	Phase Undervoltage 1 Pickup	0 to 3	pu	0.001	F001	1000
7003	Phase Undervoltage 1 Curve	0 to 1	---	1	F111	0 (Definite Time)
7004	Phase Undervoltage 1 Delay	0 to 600	s	0.01	F001	100
7005	Phase Undervoltage 1 Minimum Voltage	0 to 3	pu	0.001	F001	100
7006	Phase Undervoltage 1 Block	0 to 4294967295	---	1	F300	0
7008	Phase Undervoltage 1 Target	0 to 2	---	1	F109	0 (Self-reset)
7009	Phase Undervoltage 1 Events	0 to 1	---	1	F102	0 (Disabled)
700A	Phase Undervoltage 1 Measurement Mode	0 to 1	---	1	F186	0 (Phase to Ground)
700B	Reserved (6 items)	0 to 1	---	1	F001	0
7013	...Repeated for Phase Undervoltage 2					
7022	...Repeated for Phase Undervoltage 3					
Phase Overvoltage (Read/Write Grouped Setting) (3 modules)						
7040	Phase Overvoltage 1 Function	0 to 1	---	1	F102	0 (Disabled)
7041	Phase Overvoltage 1 Source	0 to 5	---	1	F167	0 (SRC 1)
7042	Phase Overvoltage 1 Pickup	0 to 3	pu	0.001	F001	1000
7043	Phase Overvoltage 1 Delay	0 to 600	s	0.01	F001	100
7044	Phase Overvoltage 1 Reset Delay	0 to 600	s	0.01	F001	100
7045	Phase Overvoltage 1 Block	0 to 4294967295	---	1	F300	0
7047	Phase Overvoltage 1 Target	0 to 2	---	1	F109	0 (Self-reset)
7048	Phase Overvoltage 1 Events	0 to 1	---	1	F102	0 (Disabled)
7049	...Repeated for Phase Overvoltage 2					
7052	...Repeated for Phase Overvoltage 3					
Phase Distance (Read/Write Grouped Setting) (3 modules)						
7070	Phase Distance Zone 1 Function	0 to 1	---	1	F102	0 (Disabled)
7071	Phase Distance Zone 1 Current Supervision	0.05 to 30	pu	0.001	F001	200
7072	Phase Distance Zone 1 Reach	0.02 to 500	ohms	0.01	F001	200
7073	Phase Distance Zone 1 Direction	0 to 2	---	1	F154	0 (Forward)
7074	Phase Distance Zone 1 Comparator Limit	30 to 90	degrees	1	F001	90
7075	Phase Distance Zone 1 Delay	0 to 65.535	s	0.001	F001	0
7076	Phase Distance Zone 1 Block	0 to 4294967295	---	1	F300	0
7078	Phase Distance Zone 1 Target	0 to 2	---	1	F109	0 (Self-reset)
7079	Phase Distance Zone 1 Events	0 to 1	---	1	F102	0 (Disabled)
707A	Phase Distance Zone 1 Shape	0 to 1	---	1	F120	0 (Mho) Fixed in G60
707B	Phase Distance Zone 1 RCA	30 to 90	degrees	1	F001	85
707C	Phase Distance Zone 1 DIR RCA	30 to 90	degrees	1	F001	85
707D	Phase Distance Zone 1 DIR Comp Limit	30 to 90	degrees	1	F001	90
7082	Phase Distance Zone 1 Volt Limit	0 to 5	pu	0.001	F001	0
7083	Phase Distance Zone 1 Transformer Voltage Connection	0 to 12	---	1	F153	0 (None)
7084	Phase Distance Zone 1 Transformer Current Connection	0 to 12	---	1	F153	0 (None)
7085	Phase Distance Zone 1 Rev Reach	0.02 to 500	ohms	0.01	F001	200
7086	Phase Distance Zone 1 Rev Reach RCA	30 to 90	degrees	1	F001	85
7087	Reserved (10 items)	---	---	---	F001	0
7091	...Repeated for Phase Distance Zone 2					
70B2	...Repeated for Phase Distance Zone 3					
Phase Directional Overcurrent (Read/Write Grouped Setting)						
7200	Phase Directional Overcurrent 1 Function	0 to 1	---	1	F102	0 (Disabled)
7201	Phase Directional Overcurrent 1 Source	0 to 5	---	1	F167	0 (SRC 1)
7202	Phase Directional Overcurrent 1 Block	0 to 4294967295	---	1	F300	0
7204	Phase Directional Overcurrent 1 ECA	0 to 359	---	1	F001	30
7205	Phase Directional Overcurrent 1 Pol V Threshold	0 to 3	pu	0.001	F001	700
7206	Phase Directional Overcurrent 1 Block Overcurrent	0 to 1	---	1	F126	0 (No)

Table B–10: MODBUS MEMORY MAP (Sheet 37 of 72)

ADDR	REGISTER NAME	RANGE	UNITS	STEP	FORMAT	DEFAULT
7207	Phase Directional Overcurrent 1 Target	0 to 2	---	1	F109	0 (Self-reset)
7208	Phase Directional Overcurrent 1 Events	0 to 1	---	1	F102	0 (Disabled)
7209	Reserved (8 items)	0 to 1	---	1	F001	0
Neutral Directional Overcurrent (Read/Write Grouped Setting) (2 modules)						
7230	Neutral Directional Overcurrent 1 Function	0 to 1	---	1	F102	0 (Disabled)
7231	Neutral Directional Overcurrent 1 Source	0 to 5	---	1	F167	0 (SRC 1)
7232	Neutral Directional Overcurrent 1 Polarizing	0 to 4	---	1	F230	0 (Voltage)
7233	Neutral Directional Overcurrent 1 Forward ECA	-90 to 90	° Lag	1	F002	75
7234	Neutral Directional Overcurrent 1 Forward Limit Angle	40 to 90	degrees	1	F001	90
7235	Neutral Directional Overcurrent 1 Forward Pickup	0.006 to 30	pu	0.001	F001	50
7236	Neutral Directional Overcurrent 1 Reverse Limit Angle	40 to 90	degrees	1	F001	90
7237	Neutral Directional Overcurrent 1 Reverse Pickup	0.006 to 30	pu	0.001	F001	50
7238	Neutral Directional Overcurrent 1 Target	0 to 2	---	1	F109	0 (Self-reset)
7239	Neutral Directional Overcurrent 1 Block	0 to 4294967295	---	1	F300	0
723B	Neutral Directional Overcurrent 1 Events	0 to 1	---	1	F102	0 (Disabled)
723C	Neutral Directional Overcurrent 1 Polarizing Voltage	0 to 1	---	1	F231	0 (Calculated V0)
723D	Neutral Directional Overcurrent 1 Op Current	0 to 1	---	1	F196	0 (Calculated 3I0)
723E	Neutral Directional Overcurrent 1 Offset	0 to 250	ohms	0.01	F001	0
723F	Neutral Directional Overcurrent 1 Pos Seq Restraint	0 to 0.5	---	0.001	F001	63
7240	Reserved	0 to 1	---	1	F001	0
7241	...Repeated for Neutral Directional Overcurrent 2					
Negative-Sequence Directional Overcurrent (Read/Write Grouped Settings) (2 modules)						
7260	Negative Sequence Directional Overcurrent 1 Function	0 to 1	---	1	F102	0 (Disabled)
7261	Negative Sequence Directional Overcurrent 1 Source	0 to 5	---	1	F167	0 (SRC 1)
7262	Negative Sequence Directional Overcurrent 1 Type	0 to 1	---	1	F179	0 (Neg Sequence)
7263	Neg Sequence Directional Overcurrent 1 Forward ECA	0 to 90	° Lag	1	F002	75
7264	Neg Seq Directional Overcurrent 1 Forward Limit Angle	40 to 90	degrees	1	F001	90
7265	Neg Sequence Directional Overcurrent 1 Forward Pickup	0.015 to 30	pu	0.005	F001	50
7266	Neg Seq Directional Overcurrent 1 Reverse Limit Angle	40 to 90	degrees	1	F001	90
7267	Neg Sequence Directional Overcurrent 1 Reverse Pickup	0.015 to 30	pu	0.005	F001	50
7268	Negative Sequence Directional Overcurrent 1 Target	0 to 2	---	1	F109	0 (Self-reset)
7269	Negative Sequence Directional Overcurrent 1 Block	0 to 4294967295	---	1	F300	0
726B	Negative Sequence Directional Overcurrent 1 Events	0 to 1	---	1	F102	0 (Disabled)
726C	Negative Sequence Directional Overcurrent 1 Offset	0 to 250	ohms	0.01	F001	0
726D	Negative Sequence Directional Overcurrent 1 Pos Seq Restraint	0 to 0.5	---	0.001	F001	63
726E	Reserved (3 items)	0 to 1	---	1	F001	0
7271	...Repeated for Neg Seq Directional Overcurrent 2					
Disconnect (Breaker) Switch (Read/Write Setting) (16 modules)						
74A0	Disconnect Switch 1 Function	0 to 1	---	1	F102	0 (Disabled)
74A1	Disconnect Switch 1 Name	---	---	---	F206	“SW 1"
74A4	Disconnect Switch 1 Mode	0 to 1	---	1	F157	0 (3-Pole)
74A5	Disconnect Switch 1 Open	0 to 4294967295	---	1	F300	0
74A7	Disconnect Switch 1 Block Open	0 to 4294967295	---	1	F300	0
74A9	Disconnect Switch 1 Close	0 to 4294967295	---	1	F300	0
74AB	Disconnect Switch 1 Block Close	0 to 4294967295	---	1	F300	0
74AD	Disconnect Switch 1 Phase A / Three-pole Closed	0 to 4294967295	---	1	F300	0
74AF	Disconnect Switch 1 Phase A / Three-pole Opened	0 to 4294967295	---	1	F300	0
74B1	Disconnect Switch 1 Phase B Closed	0 to 4294967295	---	1	F300	0
74B3	Disconnect Switch 1 Phase B Opened	0 to 4294967295	---	1	F300	0
74B5	Disconnect Switch 1 Phase C Closed	0 to 4294967295	---	1	F300	0
74B7	Disconnect Switch 1 Phase C Opened	0 to 4294967295	---	1	F300	0
74B9	Disconnect Switch 1 Operate Time	0 to 65.535	s	0.001	F001	70
74BA	Disconnect Switch 1 Alarm Delay	0 to 65.535	s	0.001	F003	0

Table B–10: MODBUS MEMORY MAP (Sheet 38 of 72)

ADDR	REGISTER NAME	RANGE	UNITS	STEP	FORMAT	DEFAULT
74BC	Disconnect Switch 1 Events	0 to 1	---	1	F102	0 (Disabled)
74BD	Reserved (2 items)	---	---	---	F001	0
74BF	...Repeated for Disconnect Switch 2					
74DE	...Repeated for Disconnect Switch 3					
74FD	...Repeated for Disconnect Switch 4					
751C	...Repeated for Disconnect Switch 5					
753B	...Repeated for Disconnect Switch 6					
755A	...Repeated for Disconnect Switch 7					
7579	...Repeated for Disconnect Switch 8					
7598	...Repeated for Disconnect Switch 9					
75B7	...Repeated for Disconnect Switch 10					
75D6	...Repeated for Disconnect Switch 11					
75F5	...Repeated for Disconnect Switch 12					
7614	...Repeated for Disconnect Switch 13					
7633	...Repeated for Disconnect Switch 14					
7652	...Repeated for Disconnect Switch 15					
Thermal Overload Protection (Read/Write Settings) (2 modules)						
7788	Thermal Protection 1 Function	0 to 1	---	1	F102	0 (Disabled)
7789	Thermal Protection 1 Source	0 to 5	---	1	F167	0 (SRC 1)
778A	Thermal Protection 1 Base Current	0.2 to 3	pu	0.01	F001	80
778B	Thermal Protection 1 K Factor	1 to 1.2	---	0.05	F001	110
778C	Thermal Protection 1 Trip Time Constant	0 to 1000	min.	1	F001	45
778D	Thermal Protection 1 Reset Time Constant	0 to 1000	min.	1	F001	45
778E	Thermal Protection 1 Minimum Reset Time	0 to 1000	min.	1	F001	20
778F	Thermal Protection 1 Reset	0 to 4294967295	---	1	F300	0
7791	Thermal Protection 1 Block	0 to 4294967295	---	1	F300	0
7793	Thermal Protection 1 Target	0 to 2	---	1	F109	0 (Self-reset)
7794	Thermal Protection 1 Events	0 to 1	---	1	F102	0 (Disabled)
7795	Reserved (2 items)	---	---	---	F001	0
7797	Repeated for Thermal Protection 2					
Ohm Inputs (Read/Write Setting) (2 modules)						
77F8	Ohm Inputs 1 Function	0 to 1	---	1	F102	0 (Disabled)
77F9	Ohm Inputs 1 ID	---	---	---	F205	"Ohm Ip 1 "
77FF	Reserved (9 items)	0 to 65535	---	1	F001	0
7808	...Repeated for Ohm Inputs 2					
Phasor Measurement Unit Recorder Config Counter Command (Read/Write Command)						
781A	PMU 1 Recorder Clear Config Counter	0 to 1	---	1	F126	0 (No)
Phasor Measurement Unit One-shot Command (Read/Write Setting)						
788C	PMU One-shot Function	0 to 1	---	1	F102	0 (Disabled)
788D	PMU One-shot Sequence Number	0 to 99	---	1	F001	1
788E	PMU One-shot Time	0 to 235959	---	1	F050	0
Phasor Measurement Unit Recording Values (Read Only)						
7890	PMU 1 Available Records	0 to 65535	---	1	F001	0
7891	PMU 1 Second Per Record	0 to 6553.5	---	0.1	F003	0
7893	PMU 1 Last Cleared Date	0 to 400000000	---	1	F050	0
Phasor Measurement Unit Test Values (Read/Write Setting)						
78AE	PMU 1 Test Function	0 to 1	---	1	F102	0 (Disabled)
78AF	PMU 1 Phase A Voltage Test Magnitude	0 to 700	kV	0.01	F003	50000
78B1	PMU 1 Page A Voltage Test Angle	-180 to 180	°	0.05	F002	0
78B2	PMU 1 Phase B Voltage Test Magnitude	0 to 700	kV	0.01	F003	50000
78B4	PMU 1 Phase B Voltage Test Angle	-180 to 180	°	0.05	F002	-12000
78B5	PMU 1 Phase C Voltage Test Magnitude	0 to 700	kV	0.01	F003	50000
78B7	PMU 1 Phase C Voltage Test Angle	-180 to 180	°	0.05	F002	12000
78B8	PMU 1 Auxiliary Voltage Test Magnitude	0 to 700	kV	0.01	F003	50000

Table B–10: MODBUS MEMORY MAP (Sheet 39 of 72)

ADDR	REGISTER NAME	RANGE	UNITS	STEP	FORMAT	DEFAULT
78BA	PMU 1 Auxiliary Voltage Test Angle	-180 to 180	°	0.05	F002	0
78BB	PMU 1 Phase A Current Test Magnitude	0 to 9.999	kA	0.001	F004	1000
78BD	PMU 1 Phase A Current Test Angle	-180 to 180	°	0.05	F002	-1000
78BE	PMU 1 Phase B Current Test Magnitude	0 to 9.999	kA	0.001	F004	1000
78C0	PMU 1 Phase B Current Test Angle	-180 to 180	°	0.05	F002	-13000
78C1	PMU 1 Phase C Current Test Magnitude	0 to 9.999	kA	0.001	F003	1000
78C3	PMU 1 Phase C Current Test Angle	-180 to 180	°	0.05	F002	11000
78C4	PMU 1 Ground Current Test Magnitude	0 to 9.999	kA	0.001	F004	0
78C6	PMU 1 Ground Current Test Angle	-180 to 180	°	0.05	F002	0
78C7	PMU 1 Test Frequency	20 to 70	Hz	0.001	F003	60000
78C9	PMU 1 Test df/dt	-10 to 10	Hz/s	0.01	F002	0
Underfrequency (Read/Write Setting) (6 modules)						
7A80	Underfrequency 1 Function	0 to 1	---	1	F102	0 (Disabled)
7A81	Underfrequency 1 Block	0 to 4294967295	---	1	F300	0
7A83	Underfrequency 1 Min Current	0.1 to 1.25	pu	0.01	F001	10
7A84	Underfrequency 1 Pickup	20 to 65	Hz	0.01	F001	5950
7A85	Underfrequency 1 Pickup Delay	0 to 65.535	s	0.001	F001	2000
7A86	Underfrequency 1 Reset Delay	0 to 65.535	s	0.001	F001	2000
7A87	Underfrequency 1 Source	0 to 5	---	1	F167	0 (SRC 1)
7A88	Underfrequency 1 Events	0 to 1	---	1	F102	0 (Disabled)
7A89	Underfrequency 1 Target	0 to 2	---	1	F109	0 (Self-reset)
7A8A	Reserved (5 items)	0 to 1	---	1	F001	0
7A8F	...Repeated for Underfrequency 2					
7A9E	...Repeated for Underfrequency 3					
7AAD	...Repeated for Underfrequency 4					
7ABC	...Repeated for Underfrequency 5					
7ACB	...Repeated for Underfrequency 6					
User Programmable Pushbuttons (Read/Write Setting) (16 modules)						
7B60	User Programmable Pushbutton 1 Function	0 to 2	---	1	F137	0 (Disabled)
7B61	User Programmable Pushbutton 1 Top Line	---	---	---	F202	(none)
7B6B	User Programmable Pushbutton 1 On Text	---	---	---	F202	(none)
7B75	User Programmable Pushbutton 1 Off Text	---	---	---	F202	(none)
7B7F	User Programmable Pushbutton 1 Drop-Out Time	0 to 60	s	0.05	F001	0
7B80	User Programmable Pushbutton 1 Target	0 to 2	---	1	F109	0 (Self-reset)
7B81	User Programmable Pushbutton 1 Events	0 to 1	---	1	F102	0 (Disabled)
7B82	User Programmable Pushbutton 1 LED Operand	0 to 4294967295	---	1	F300	0
7B84	User Programmable Pushbutton 1 Autoreset Delay	0.2 to 600	s	0.1	F001	10
7B85	User Programmable Pushbutton 1 Autoreset Function	0 to 1	---	1	F102	0 (Disabled)
7B86	User Programmable Pushbutton 1 Local Lock Operand	0 to 4294967295	---	1	F300	0
7B88	User Programmable Pushbutton 1 Message Priority	0 to 2	---	1	F220	0 (Disabled)
7B89	User Programmable Pushbutton 1 Remote Lock Operand	0 to 4294967295	---	1	F300	0
7B8B	User Programmable Pushbutton 1 Reset Operand	0 to 4294967295	---	1	F300	0
7B8D	User Programmable Pushbutton 1 Set Operand	0 to 4294967295	---	1	F300	0
7B8F	User Programmable Pushbutton 1 Hold	0 to 10	s	0.1	F001	1
7B90	...Repeated for User Programmable Pushbutton 2					
7BC0	...Repeated for User Programmable Pushbutton 3					
7BF0	...Repeated for User Programmable Pushbutton 4					
7C20	...Repeated for User Programmable Pushbutton 5					
7C50	...Repeated for User Programmable Pushbutton 6					
7C80	...Repeated for User Programmable Pushbutton 7					
7CB0	...Repeated for User Programmable Pushbutton 8					
7DE0	...Repeated for User Programmable Pushbutton 9					
7D10	...Repeated for User Programmable Pushbutton 10					
7D40	...Repeated for User Programmable Pushbutton 11					

Table B–10: MODBUS MEMORY MAP (Sheet 40 of 72)

ADDR	REGISTER NAME	RANGE	UNITS	STEP	FORMAT	DEFAULT
7D70	...Repeated for User Programmable Pushbutton 12					
7DA0	...Repeated for User Programmable Pushbutton 13					
7DD0	...Repeated for User Programmable Pushbutton 14					
7E00	...Repeated for User Programmable Pushbutton 15					
7E30	...Repeated for User Programmable Pushbutton 16					
Field Current (Read/Write Grouped Setting)						
7E74	Field Current Function	0 to 1	---	1	F102	0 (Disabled)
7E75	Field Current Origin	0 to 48	---	1	F151	0 (NONE)
7E76	Field Current OC Pickup	0.05 to 1	pu	0.01	F001	80
7E77	Field Current OC Delay	0 to 600	seconds	0.01	F001	100
7E78	Field Current UC Pickup	0.05 to 1	pu	0.01	F001	20
7E79	Field Current UC Delay	0 to 600	seconds	0.01	F001	100
7E7A	Field Current Block	0 to 4294967295	---	1	F300	0
7E7C	Field Current Target	0 to 2	---	1	F109	0 (Self-reset)
7E7D	Field Current Events	0 to 1	---	1	F102	0 (Disabled)
Field Ground (Read/Write Grouped Setting)						
7E7E	Field Ground Function	0 to 1	---	1	F102	0 (Disabled)
7E7F	Field Ground Injection Frequency	0.1 to 3	Hz	0.01	F001	100
7E80	Field Ground Inj Connection Type	0 to 1	---	1	F613	0 (Single Point)
7E81	Field Ground STG1 Pickup	1 to 500	kOhm	1	F001	20
7E82	Field Ground STG1 Delay	0.1 to 600	seconds	0.1	F001	100
7E83	Field Ground STG2 Pickup	1 to 500	kOhm	1	F001	5
7E84	Field Ground STG2 Delay	0.1 to 600	seconds	0.1	F001	30
7E85	Field Ground UC Pickup	0.05 to 100	mA	0.01	F001	100
7E86	Field Ground UC Delay	0.1 to 600	seconds	0.01	F001	100
7E87	Field Ground Block	0 to 4294967295	---	1	F300	0
7E89	Field Ground Target	0 to 2	---	1	F109	0 (Self-reset)
7E8A	Field Ground Events	0 to 1	---	1	F102	0 (Disabled)
Distance (Read/Write Grouped Setting)						
7E8C	Distance Signal Source	0 to 5	---	1	F167	0 (SRC 1)
7E8D	Memory Duration	5 to 25	cycles	1	F001	10
7E8E	Force Self-Polarization	0 to 4294967295	---	1	F300	0
7E90	Force Memory Polarization	0 to 4294967295	---	1	F300	0
Distance Actual Values (Read Only)						
7E94	AB Loop Resistance	-2147483647 to 2147483647	ohm	1	F060	0
7E96	AB Loop Reactance	-2147483647 to 2147483647	ohm	1	F060	0
7E98	AB Loop Impedance Magnitude	0 to 2147483647	ohm	1	F060	0
7E9A	AB Loop Impedance Angle	-359.9 to 0	degrees	0.1	F002	0
7E9B	BC Loop Resistance	-2147483647 to 2147483647	ohm	1	F060	0
7E9D	BC Loop Reactance	-2147483647 to 2147483647	ohm	1	F060	0
7E9F	BC Loop Impedance Magnitude	0 to 2147483647	ohm	1	F060	0
7EA1	BC Loop Impedance Angle	-359.9 to 0	degrees	0.1	F002	0
7EA2	CA Loop Resistance	-2147483647 to 2147483647	ohm	1	F060	0
7EA4	CA Loop Reactance	-2147483647 to 2147483647	ohm	1	F060	0
7EA6	CA Loop Impedance Magnitude	0 to 2147483647	ohm	1	F060	0
7EA8	CA Loop Impedance Angle	-359.9 to 0	degrees	0.1	F002	0
7EA9	AG Loop Resistance	-2147483647 to 2147483647	ohm	1	F060	0
7EAB	AG Loop Reactance	-2147483647 to 2147483647	ohm	1	F060	0

Table B–10: MODBUS MEMORY MAP (Sheet 41 of 72)

ADDR	REGISTER NAME	RANGE	UNITS	STEP	FORMAT	DEFAULT
7EAD	AG Loop Impedance Magnitude	0 to 2147483647	ohm	1	F060	0
7EAF	AG Loop Impedance Angle	-359.9 to 0	degrees	0.1	F002	0
7EB0	BG Loop Resistance	-2147483647 to 2147483647	ohm	1	F060	0
7EB2	BG Loop Reactance	-2147483647 to 2147483647	ohm	1	F060	0
7EB4	BG Loop Impedance Magnitude	0 to 2147483647	ohm	1	F060	0
7EB6	BG Loop Impedance Angle	-359.9 to 0	degrees	0.1	F002	0
7EB7	CG Loop Resistance	-2147483647 to 2147483647	ohm	1	F060	0
7EB9	CG Loop Reactance	-2147483647 to 2147483647	ohm	1	F060	0
7EBB	CG Loop Impedance Magnitude	0 to 2147483647	ohm	1	F060	0
7EBD	CG Loop Impedance Angle	-359.9 to 0	degrees	0.1	F002	0
Distance Loop Impedance (Read Only)						
7EC0	Dist Zab Mag	0 to 655.35	ohm	0.01	F001	0
7EC1	Dist Zab Ang	-359.9 to 0	degrees	0.1	F002	0
7EC2	Dist Zbc Mag	0 to 655.35	ohm	---	F001	0
7EC3	Dist Zbc Ang	-359.9 to 0	degrees	0.1	F002	0
7EC4	Dist Zca Mag	0 to 655.35	ohm	0.01	F001	0
7EC5	Dist Zca Ang	-359.9 to 0	degree	0.1	F002	0
7EC6	Dist Zag Mag	0 to 655.35	ohm	0.01	F001	0
7EC7	Dist Zag Ang	-359.9 to 0	degree	0.1	F002	0
7EC8	Dist Zbg Mag	0 to 655.35	ohm	0.01	F001	0
7EC9	Dist Zbg Ang	-359.9 to 0	degree	0.1	F002	0
7ECA	Dist Zcg Mag	0 to 655.35	ohm	0.01	F001	0
7ECB	Dist Zcg Ang	-359.9 to 0	degree	0.1	F002	0
Neutral Overvoltage (Read/Write Grouped Setting) (3 modules)						
7F00	Neutral Overvoltage 1 Function	0 to 1	---	1	F102	0 (Disabled)
7F01	Neutral Overvoltage 1 Signal Source	0 to 5	---	1	F167	0 (SRC 1)
7F02	Neutral Overvoltage 1 Pickup	0 to 3	pu	0.001	F001	300
7F03	Neutral Overvoltage 1 Pickup Delay	0 to 600	s	0.01	F001	100
7F04	Neutral Overvoltage 1 Reset Delay	0 to 600	s	0.01	F001	100
7F05	Neutral Overvoltage 1 Block	0 to 4294967295	---	1	F300	0
7F07	Neutral Overvoltage 1 Target	0 to 2	---	1	F109	0 (Self-reset)
7F08	Neutral Overvoltage 1 Events	0 to 1	---	1	F102	0 (Disabled)
7F09	Neutral Overvoltage 1 Curves	0 to 3	---	1	F116	0 (Definite Time)
7F0A	Reserved (7 items)	0 to 65535	---	1	F001	0
7F11	...Repeated for Neutral Overvoltage 2					
7F22	...Repeated for Neutral Overvoltage 3					
Auxiliary Undervoltage (Read/Write Grouped Setting (2 modules)						
7F60	Auxiliary Undervoltage 1 Function	0 to 1	---	1	F102	0 (Disabled)
7F61	Auxiliary Undervoltage 1 Signal Source	0 to 5	---	1	F167	0 (SRC 1)
7F62	Auxiliary Undervoltage 1 Pickup	0 to 3	pu	0.001	F001	700
7F63	Auxiliary Undervoltage 1 Delay	0 to 600	s	0.01	F001	100
7F64	Auxiliary Undervoltage 1 Curve	0 to 1	---	1	F111	0 (Definite Time)
7F65	Auxiliary Undervoltage 1 Minimum Voltage	0 to 3	pu	0.001	F001	100
7F66	Auxiliary Undervoltage 1 Block	0 to 4294967295	---	1	F300	0
7F68	Auxiliary Undervoltage 1 Target	0 to 2	---	1	F109	0 (Self-reset)
7F69	Auxiliary Undervoltage 1 Events	0 to 1	---	1	F102	0 (Disabled)
7F6A	Reserved (7 items)	0 to 65535	---	1	F001	0
7F71	...Repeated for Auxiliary Undervoltage 2					

Table B–10: MODBUS MEMORY MAP (Sheet 42 of 72)

ADDR	REGISTER NAME	RANGE	UNITS	STEP	FORMAT	DEFAULT
Auxiliary Overvoltage (Read/Write Grouped Setting) (2 modules)						
7FA0	Auxiliary Overvoltage 1 Function	0 to 1	---	1	F102	0 (Disabled)
7FA1	Auxiliary Overvoltage 1 Signal Source	0 to 5	---	1	F167	0 (SRC 1)
7FA2	Auxiliary Overvoltage 1 Pickup	0 to 3	pu	0.001	F001	300
7FA3	Auxiliary Overvoltage 1 Pickup Delay	0 to 600	s	0.01	F001	100
7FA4	Auxiliary Overvoltage 1 Reset Delay	0 to 600	s	0.01	F001	100
7FA5	Auxiliary Overvoltage 1 Block	0 to 4294967295	---	1	F300	0
7FA7	Auxiliary Overvoltage 1 Target	0 to 2	---	1	F109	0 (Self-reset)
7FA8	Auxiliary Overvoltage 1 Events	0 to 1	---	1	F102	0 (Disabled)
7FA9	Reserved (8 items)	0 to 65535	---	1	F001	0
7FB1	...Repeated for Auxiliary Overvoltage 2					
Frequency (Read Only)						
8000	Tracking Frequency	2 to 90	Hz	0.01	F001	0
Temp Monitor Actual Values (Read Only Non-Volatile)						
81C0	Reserved Register T1	-55 to 125	C	1	F002	-55
81C1	Reserved Register T2	-55 to 125	C	1	F002	125
81C2	Reserved Register T3	-2147483647 to 2147483647	---	1	F004	0
81C4	Reserved Register T4	0 to 4294967295	---	1	F003	0
81C6	Reserved Register T5	0 to 4294967295	---	1	F003	0
81C8	Reserved Register T6	0 to 4294967295	---	1	F003	0
81CA	Reserved Register T7	0 to 4294967295	---	1	F003	0
81CC	Reserved Register T8	0 to 4294967295	---	1	F003	0
EGD Fast Production Status (Read Only Non-Volatile and Read Only)						
83E0	EGD Fast Producer Exchange 1 Signature	0 to 65535	---	1	F001	0
83E1	EGD Fast Producer Exchange 1 Configuration Time	0 to 4294967295	---	---	F003	0
83E3	EGD Fast Producer Exchange 1 Size	0 to 65535	---	1	F001	0
EGD Slow Production Status (Read Only Non-Volatile and Read Only) (2 modules)						
83F0	EGD Slow Producer Exchange 1 Signature	0 to 65535	---	1	F001	0
83F1	EGD Slow Producer Exchange 1 Configuration Time	0 to 4294967295	---	---	F003	0
83F3	EGD Slow Producer Exchange 1 Size	0 to 65535	---	1	F001	0
83F4	...Repeated for EGD Slow Producer Exchange 2					
EGD Fast Production (Read/Write Setting)						
8400	EGD Fast Producer Exchange 1 Function	0 to 1	---	1	F102	0 (Disabled)
8401	EGD Fast Producer Exchange 1 Destination	0 to 4294967295	---	1	F003	0
8403	EGD Fast Producer Exchange 1 Data Rate	50 to 1000	ms	50	F001	1000
8404	EGD Fast Producer Exchange 1 Data Item 1 (20 items)	0 to 65535	---	1	F001	0
8418	Reserved (80 items)	---	---	---	F001	0
EGD Slow Production (Read/Write Setting) (2 modules)						
8468	EGD Slow Producer Exchange 1 Function	0 to 1	---	1	F102	0 (Disabled)
8469	EGD Fast Producer Exchange 1 Destination	0 to 4294967295	---	1	F003	0
846B	EGD Slow Producer Exchange 1 Data Rate	500 to 1000	ms	50	F001	1000
846C	EGD Slow Producer Exchange 1 Data Item 1 (50 items)	0 to 65535	---	1	F001	0
849E	Reserved (50 items)	---	---	---	F001	0
84D0	...Repeated for EGD Exchange 2					
Breaker Failure (Read/Write Grouped Setting) (4 modules)						
8600	Breaker Failure 1 Function	0 to 1	---	1	F102	0 (Disabled)
8601	Breaker Failure 1 Mode	0 to 1	---	1	F157	0 (3-Pole)
8602	Breaker Failure 1 Source	0 to 5	---	1	F167	0 (SRC 1)
8603	Breaker Failure 1 Amp Supervision	0 to 1	---	1	F126	1 (Yes)
8604	Breaker Failure 1 Use Seal-In	0 to 1	---	1	F126	1 (Yes)
8605	Breaker Failure 1 Three Pole Initiate	0 to 4294967295	---	1	F300	0
8607	Breaker Failure 1 Block	0 to 4294967295	---	1	F300	0
8609	Breaker Failure 1 Phase Amp Supv Pickup	0.001 to 30	pu	0.001	F001	1050

Table B–10: MODBUS MEMORY MAP (Sheet 43 of 72)

ADDR	REGISTER NAME	RANGE	UNITS	STEP	FORMAT	DEFAULT
860A	Breaker Failure 1 Neutral Amp Supv Pickup	0.001 to 30	pu	0.001	F001	1050
860B	Breaker Failure 1 Use Timer 1	0 to 1	---	1	F126	1 (Yes)
860C	Breaker Failure 1 Timer 1 Pickup	0 to 65.535	s	0.001	F001	0
860D	Breaker Failure 1 Use Timer 2	0 to 1	---	1	F126	1 (Yes)
860E	Breaker Failure 1 Timer 2 Pickup	0 to 65.535	s	0.001	F001	0
860F	Breaker Failure 1 Use Timer 3	0 to 1	---	1	F126	1 (Yes)
8610	Breaker Failure 1 Timer 3 Pickup	0 to 65.535	s	0.001	F001	0
8611	Breaker Failure 1 Breaker Status 1 Phase A/3P	0 to 4294967295	---	1	F300	0
8613	Breaker Failure 1 Breaker Status 2 Phase A/3P	0 to 4294967295	---	1	F300	0
8615	Breaker Failure 1 Breaker Test On	0 to 4294967295	---	1	F300	0
8617	Breaker Failure 1 Phase Amp Hiset Pickup	0.001 to 30	pu	0.001	F001	1050
8618	Breaker Failure 1 Neutral Amp Hiset Pickup	0.001 to 30	pu	0.001	F001	1050
8619	Breaker Failure 1 Phase Amp Loset Pickup	0.001 to 30	pu	0.001	F001	1050
861A	Breaker Failure 1 Neutral Amp Loset Pickup	0.001 to 30	pu	0.001	F001	1050
861B	Breaker Failure 1 Loset Time	0 to 65.535	s	0.001	F001	0
861C	Breaker Failure 1 Trip Dropout Delay	0 to 65.535	s	0.001	F001	0
861D	Breaker Failure 1 Target	0 to 2	---	1	F109	0 (Self-reset)
861E	Breaker Failure 1 Events	0 to 1	---	1	F102	0 (Disabled)
861F	Breaker Failure 1 Phase A Initiate	0 to 4294967295	---	1	F300	0
8621	Breaker Failure 1 Phase B Initiate	0 to 4294967295	---	1	F300	0
8623	Breaker Failure 1 Phase C Initiate	0 to 4294967295	---	1	F300	0
8625	Breaker Failure 1 Breaker Status 1 Phase B	0 to 4294967295	---	1	F300	0
8627	Breaker Failure 1 Breaker Status 1 Phase C	0 to 4294967295	---	1	F300	0
8629	Breaker Failure 1 Breaker Status 2 Phase B	0 to 4294967295	---	1	F300	0
862B	Breaker Failure 1 Breaker Status 2 Phase C	0 to 4294967295	---	1	F300	0
862D	...Repeated for Breaker Failure 2					
865A	...Repeated for Breaker Failure 3					
8687	...Repeated for Breaker Failure 4					
Remote RTD Inputs (Read Only Actual Values) (12 modules)						
87C0	Remote RTD 1 Value	0 to 200	°C	1	F002	0
87C1	Remote RTD 2 Value	0 to 200	°C	1	F002	0
87C2	Remote RTD 3 Value	0 to 200	°C	1	F002	0
87C3	Remote RTD 4 Value	0 to 200	°C	1	F002	0
87C4	Remote RTD 5 Value	0 to 200	°C	1	F002	0
87C5	Remote RTD 6 Value	0 to 200	°C	1	F002	0
87C6	Remote RTD 7 Value	0 to 200	°C	1	F002	0
87C7	Remote RTD 8 Value	0 to 200	°C	1	F002	0
87C8	Remote RTD 9 Value	0 to 200	°C	1	F002	0
87C9	Remote RTD 10 Value	0 to 200	°C	1	F002	0
87CA	Remote RTD 11 Value	0 to 200	°C	1	F002	0
87CB	Remote RTD 12 Value	0 to 200	°C	1	F002	0
FlexState Settings (Read/Write Setting)						
8800	FlexState Parameters (256 items)	0 to 4294967295	---	1	F300	0
Digital Elements (Read/Write Setting) (48 modules)						
8A00	Digital Element 1 Function	0 to 1	---	1	F102	0 (Disabled)
8A01	Digital Element 1 Name	---	---	---	F203	“Dig Element 1“
8A09	Digital Element 1 Input	0 to 4294967295	---	1	F300	0
8A0B	Digital Element 1 Pickup Delay	0 to 999999.999	s	0.001	F003	0
8A0D	Digital Element 1 Reset Delay	0 to 999999.999	s	0.001	F003	0
8A0F	Digital Element 1 Block	0 to 4294967295	---	1	F300	0
8A11	Digital Element 1 Target	0 to 2	---	1	F109	0 (Self-reset)
8A12	Digital Element 1 Events	0 to 1	---	1	F102	0 (Disabled)
8A13	Digital Element 1 Pickup LED	0 to 1	---	1	F102	1 (Enabled)
8A14	Reserved (2 items)	---	---	---	F001	0

Table B–10: MODBUS MEMORY MAP (Sheet 44 of 72)

ADDR	REGISTER NAME	RANGE	UNITS	STEP	FORMAT	DEFAULT
8A16	...Repeated for Digital Element 2					
8A2C	...Repeated for Digital Element 3					
8A42	...Repeated for Digital Element 4					
8A58	...Repeated for Digital Element 5					
8A6E	...Repeated for Digital Element 6					
8A84	...Repeated for Digital Element 7					
8A9A	...Repeated for Digital Element 8					
8AB0	...Repeated for Digital Element 9					
8AC6	...Repeated for Digital Element 10					
8ADC	...Repeated for Digital Element 11					
8AF2	...Repeated for Digital Element 12					
8B08	...Repeated for Digital Element 13					
8B1E	...Repeated for Digital Element 14					
8B34	...Repeated for Digital Element 15					
8B4A	...Repeated for Digital Element 16					
8B60	...Repeated for Digital Element 17					
8B76	...Repeated for Digital Element 18					
8B8C	...Repeated for Digital Element 19					
8BA2	...Repeated for Digital Element 20					
8BB8	...Repeated for Digital Element 21					
8BCE	...Repeated for Digital Element 22					
8BE4	...Repeated for Digital Element 23					
8BFA	...Repeated for Digital Element 24					
8C10	...Repeated for Digital Element 25					
8C26	...Repeated for Digital Element 26					
8C3C	...Repeated for Digital Element 27					
8C52	...Repeated for Digital Element 28					
8C68	...Repeated for Digital Element 29					
8C7E	...Repeated for Digital Element 30					
8C94	...Repeated for Digital Element 31					
8CAA	...Repeated for Digital Element 32					
8CC0	...Repeated for Digital Element 33					
8CD6	...Repeated for Digital Element 34					
8CEC	...Repeated for Digital Element 35					
8D02	...Repeated for Digital Element 36					
8D18	...Repeated for Digital Element 37					
8D2E	...Repeated for Digital Element 38					
8D44	...Repeated for Digital Element 39					
8D5A	...Repeated for Digital Element 40					
8D70	...Repeated for Digital Element 41					
8D86	...Repeated for Digital Element 42					
8D9C	...Repeated for Digital Element 43					
8DB2	...Repeated for Digital Element 44					
8DC8	...Repeated for Digital Element 45					
8DDE	...Repeated for Digital Element 46					
8DF4	...Repeated for Digital Element 47					
8E0A	...Repeated for Digital Element 48					
Trip Bus (Read/Write Setting) (6 modules)						
8ED0	Trip Bus 1 Function	0 to 1	---	1	F102	0 (Disabled)
8ED1	Trip Bus 1 Block	0 to 4294967295	---	1	F300	0
8ED3	Trip Bus 1 Pickup Delay	0 to 600	s	0.01	F001	0
8ED4	Trip Bus 1 Reset Delay	0 to 600	s	0.01	F001	0
8ED5	Trip Bus 1 Input (16 items)	0 to 4294967295	---	1	F300	0
8EF5	Trip Bus 1 Latching	0 to 1	---	1	F102	0 (Disabled)

Table B–10: MODBUS MEMORY MAP (Sheet 45 of 72)

ADDR	REGISTER NAME	RANGE	UNITS	STEP	FORMAT	DEFAULT
8EF6	Trip Bus 1 Reset	0 to 4294967295	---	1	F300	0
8EF8	Trip Bus 1 Target	0 to 2	---	1	F109	0 (Self-reset)
8EF9	Trip Bus 1 Events	0 to 1	---	1	F102	0 (Disabled)
8EFA	Reserved (8 items)	0 to 1	---	1	F001	0
8F02	...Repeated for Trip Bus 2					
8F34	...Repeated for Trip Bus 3					
8F66	...Repeated for Trip Bus 4					
8F98	...Repeated for Trip Bus 5					
8FCA	...Repeated for Trip Bus 6					
FlexElement (Read/Write Setting) (16 modules)						
9000	FlexElement 1 Function	0 to 1	---	1	F102	0 (Disabled)
9001	FlexElement 1 Name	---	---	---	F206	“FxE 1”
9004	FlexElement 1 InputP	0 to 65535	---	1	F600	0
9005	FlexElement 1 InputM	0 to 65535	---	1	F600	0
9006	FlexElement 1 Compare	0 to 1	---	1	F516	0 (LEVEL)
9007	FlexElement 1 Input	0 to 1	---	1	F515	0 (SIGNED)
9008	FlexElement 1 Direction	0 to 1	---	1	F517	0 (OVER)
9009	FlexElement 1 Hysteresis	0.1 to 50	%	0.1	F001	30
900A	FlexElement 1 Pickup	-90 to 90	pu	0.001	F004	1000
900C	FlexElement 1 DeltaT Units	0 to 2	---	1	F518	0 (Milliseconds)
900D	FlexElement 1 DeltaT	20 to 86400	---	1	F003	20
900F	FlexElement 1 Pickup Delay	0 to 65.535	s	0.001	F001	0
9010	FlexElement 1 Reset Delay	0 to 65.535	s	0.001	F001	0
9011	FlexElement 1 Block	0 to 4294967295	---	1	F300	0
9013	FlexElement 1 Target	0 to 2	---	1	F109	0 (Self-reset)
9014	FlexElement 1 Events	0 to 1	---	1	F102	0 (Disabled)
9015	...Repeated for FlexElement 2					
902A	...Repeated for FlexElement 3					
903F	...Repeated for FlexElement 4					
9054	...Repeated for FlexElement 5					
9069	...Repeated for FlexElement 6					
907E	...Repeated for FlexElement 7					
9093	...Repeated for FlexElement 8					
90A8	...Repeated for FlexElement 9					
90BD	...Repeated for FlexElement 10					
90D2	...Repeated for FlexElement 11					
90E7	...Repeated for FlexElement 12					
90FC	...Repeated for FlexElement 13					
9111	...Repeated for FlexElement 14					
9126	...Repeated for FlexElement 15					
913B	...Repeated for FlexElement 16					
RRTD Inputs (Read/Write Setting) (12 modules)						
9260	RRTD RTD 1 Function	0 to 1	---	1	F102	0 (Disabled)
9261	RRTD RTD 1 ID	---	---	---	F205	"RRTD 1 "
9267	RRTD RTD 1 Type	0 to 3	---	1	F174	0 (100 Ohm Platinum)
9268	RRTD RTD 1 Application	0 to 5	---	1	F550	0 (None)
9269	RRTD RTD 1 Alarm Temp	1 to 200	°C	1	F001	130
926A	RRTD RTD 1 Alarm Pickup Delay	5 to 600	s	5	F001	5
926B	RRTD RTD 1 Trip Temp	1 to 200	°C	1	F001	130
926C	RRTD RTD 1 Trip Pickup Delay	5 to 600	s	5	F001	5
926D	RRTD RTD 1 Trip Reset Delay	5 to 600	s	5	F001	5
926E	RRTD RTD 1 Trip Voting	0 to 13	---	1	F603	0 (None)
926F	RRTD RTD 1 Block	0 to 4294967295	---	1	F300	0

Table B–10: MODBUS MEMORY MAP (Sheet 46 of 72)

ADDR	REGISTER NAME	RANGE	UNITS	STEP	FORMAT	DEFAULT
9271	RRTD RTD 1 Open	0 to 2	---	1	F552	0 (None)
9272	RRTD RTD 1 Target	0 to 2	---	1	F109	0 (Self-reset)
9273	RRTD RTD 1 Events	0 to 1	---	1	F102	0 (Disabled)
9274	...Repeated for module number 2		---			
9288	...Repeated for module number 3		---			
929C	...Repeated for module number 4		---			
92B0	...Repeated for module number 5		---			
92C4	...Repeated for module number 6		---			
92D8	...Repeated for module number 7		---			
92EC	...Repeated for module number 8		---			
9300	...Repeated for module number 9		---			
9314	...Repeated for module number 10		---			
9328	...Repeated for module number 11		---			
933C	...Repeated for module number 12		---			
DCmA Outputs (Read/Write Setting) (24 modules)						
9360	DCmA Output 1 Source	0 to 65535	---	1	F600	0
9361	DCmA Output 1 Range	0 to 2	---	1	F522	0 (–1 to 1 mA)
9362	DCmA Output 1 Minimum	–90 to 90	pu	0.001	F004	0
9364	DCmA Output 1 Maximum	–90 to 90	pu	0.001	F004	1000
9366	...Repeated for DCmA Output 2					
936C	...Repeated for DCmA Output 3					
9372	...Repeated for DCmA Output 4					
9378	...Repeated for DCmA Output 5					
937E	...Repeated for DCmA Output 6					
9384	...Repeated for DCmA Output 7					
938A	...Repeated for DCmA Output 8					
9390	...Repeated for DCmA Output 9					
9396	...Repeated for DCmA Output 10					
939C	...Repeated for DCmA Output 11					
93A2	...Repeated for DCmA Output 12					
93A8	...Repeated for DCmA Output 13					
93AE	...Repeated for DCmA Output 14					
93B4	...Repeated for DCmA Output 15					
93BA	...Repeated for DCmA Output 16					
93C0	...Repeated for DCmA Output 17					
93C6	...Repeated for DCmA Output 18					
93CC	...Repeated for DCmA Output 19					
93D2	...Repeated for DCmA Output 20					
93D8	...Repeated for DCmA Output 21					
93DE	...Repeated for DCmA Output 22					
93E4	...Repeated for DCmA Output 23					
93EA	...Repeated for DCmA Output 24					
Direct Input/Output Names (Read/Write Setting) (32 modules)						
9400	Direct Input 1 Name	0 to 96	---	1	F205	“Dir Ip 1”
9406	Direct Output 1 Name	1 to 96	---	1	F205	“Dir Out 1”
940C	...Repeated for Direct Input/Output 2					
9418	...Repeated for Direct Input/Output 3					
9424	...Repeated for Direct Input/Output 4					
9430	...Repeated for Direct Input/Output 5					
943C	...Repeated for Direct Input/Output 6					
9448	...Repeated for Direct Input/Output 7					
9454	...Repeated for Direct Input/Output 8					
9460	...Repeated for Direct Input/Output 9					
946C	...Repeated for Direct Input/Output 10					

Table B–10: MODBUS MEMORY MAP (Sheet 47 of 72)

ADDR	REGISTER NAME	RANGE	UNITS	STEP	FORMAT	DEFAULT
9478	...Repeated for Direct Input/Output 11					
9484	...Repeated for Direct Input/Output 12					
9490	...Repeated for Direct Input/Output 13					
949C	...Repeated for Direct Input/Output 14					
94A8	...Repeated for Direct Input/Output 15					
94B4	...Repeated for Direct Input/Output 16					
94C0	...Repeated for Direct Input/Output 17					
94CC	...Repeated for Direct Input/Output 18					
94D8	...Repeated for Direct Input/Output 19					
94E4	...Repeated for Direct Input/Output 20					
94F0	...Repeated for Direct Input/Output 21					
94FC	...Repeated for Direct Input/Output 22					
9508	...Repeated for Direct Input/Output 23					
9514	...Repeated for Direct Input/Output 24					
9520	...Repeated for Direct Input/Output 25					
952C	...Repeated for Direct Input/Output 26					
9538	...Repeated for Direct Input/Output 27					
9544	...Repeated for Direct Input/Output 28					
9550	...Repeated for Direct Input/Output 29					
955C	...Repeated for Direct Input/Output 30					
9568	...Repeated for Direct Input/Output 31					
9574	...Repeated for Direct Input/Output 32					
IEC 61850 Received Integers (Read/Write Setting) (16 modules)						
98A0	IEC 61850 GOOSE uinteger 1 Default Value	0 to 429496295	---	1	F003	1000
98A2	IEC 61850 GOOSE uinteger Input 1 Mode	0 to 1	---	1	F491	0 (Default Value)
98A3	...Repeated for IEC61850 GOOSE uinteger 2					
98A6	...Repeated for IEC61850 GOOSE uinteger 3					
98A9	...Repeated for IEC61850 GOOSE uinteger 4					
98AC	...Repeated for IEC61850 GOOSE uinteger 5					
98AF	...Repeated for IEC61850 GOOSE uinteger 6					
98B2	...Repeated for IEC61850 GOOSE uinteger 7					
98B5	...Repeated for IEC61850 GOOSE uinteger 8					
98B8	...Repeated for IEC61850 GOOSE uinteger 9					
98BB	...Repeated for IEC61850 GOOSE uinteger 10					
98BE	...Repeated for IEC61850 GOOSE uinteger 11					
98C1	...Repeated for IEC61850 GOOSE uinteger 12					
98C4	...Repeated for IEC61850 GOOSE uinteger 13					
98C7	...Repeated for IEC61850 GOOSE uinteger 14					
98CA	...Repeated for IEC61850 GOOSE uinteger 15					
98CD	...Repeated for IEC61850 GOOSE uinteger 16					
FlexElement Actual Values (Read Only) (16 modules)						
9900	FlexElement 1 Actual	-2147483.647 to 2147483.647	---	0.001	F004	0
9902	FlexElement 2 Actual	-2147483.647 to 2147483.647	---	0.001	F004	0
9904	FlexElement 3 Actual	-2147483.647 to 2147483.647	---	0.001	F004	0
9906	FlexElement 4 Actual	-2147483.647 to 2147483.647	---	0.001	F004	0
9908	FlexElement 5 Actual	-2147483.647 to 2147483.647	---	0.001	F004	0
990A	FlexElement 6 Actual	-2147483.647 to 2147483.647	---	0.001	F004	0
990C	FlexElement 7 Actual	-2147483.647 to 2147483.647	---	0.001	F004	0
990E	FlexElement 8 Actual	-2147483.647 to 2147483.647	---	0.001	F004	0
9910	FlexElement 9 Actual	-2147483.647 to 2147483.647	---	0.001	F004	0
9912	FlexElement 10 Actual	-2147483.647 to 2147483.647	---	0.001	F004	0
9914	FlexElement 11 Actual	-2147483.647 to 2147483.647	---	0.001	F004	0
9916	FlexElement 12 Actual	-2147483.647 to 2147483.647	---	0.001	F004	0

Table B–10: MODBUS MEMORY MAP (Sheet 48 of 72)

ADDR	REGISTER NAME	RANGE	UNITS	STEP	FORMAT	DEFAULT
9918	FlexElement 13 Actual	-2147483.647 to 2147483.647	---	0.001	F004	0
991A	FlexElement 14 Actual	-2147483.647 to 2147483.647	---	0.001	F004	0
991C	FlexElement 15 Actual	-2147483.647 to 2147483.647	---	0.001	F004	0
991E	FlexElement 16 Actual	-2147483.647 to 2147483.647	---	0.001	F004	0
Teleprotection Inputs/Outputs Commands (Read/Write Command)						
9980	Teleprotection Clear Lost Packets	0 to 1	---	1	F126	0 (No)
Teleprotection Inputs/Outputs (Read/Write Settings)						
9990	Teleprotection Function	0 to 1	---	1	F102	0 (Disabled)
9991	Teleprotection Number of Terminals	2 to 3	---	1	F001	2
9992	Teleprotection Number of Channels	1 to 2	---	1	F001	1
9993	Teleprotection Local Relay ID	0 to 255	---	1	F001	0
9994	Teleprotection Terminal 1 ID	0 to 255	---	1	F001	0
9995	Teleprotection Terminal 2 ID	0 to 255	---	1	F001	0
9996	Reserved (10 items)	0 to 1	---	1	F001	0
9A00	Teleprotection Input 1-n Default States (16 items)	0 to 3	---	1	F086	0 (Off)
9A10	Teleprotection Input 2-n Default States (16 items)	0 to 3	---	1	F086	0 (Off)
9A20	Teleprotection Output 1-n Operand (16 items)	0 to 4294967295	---	1	F300	0
9A40	Teleprotection Output 2-n Operand (16 items)	0 to 4294967295	---	1	F300	0
Teleprotection Channel Tests (Read Only)						
9AA0	Teleprotection Channel 1 Status	0 to 2	---	1	F134	1 (OK)
9AA1	Teleprotection Channel 1 Number of Lost Packets	0 to 65535	---	1	F001	0
9AA2	Teleprotection Channel 2 Status	0 to 2	---	1	F134	2 (n/a)
9AA3	Teleprotection Channel 2 Number of Lost Packets	0 to 65535	---	1	F001	0
9AA4	Teleprotection Network Status	0 to 2	---	1	F134	2 (n/a)
9AAF	Teleprotection Channel 1 Input States	0 to 1	---	1	F500	0
9AB0	Teleprotection Channel 2 Input States	0 to 1	---	1	F500	0
9AC0	Teleprotection Input 1 States, one per register (16 items)	0 to 1	---	1	F108	0 (Off)
9AD0	Teleprotection Input 2 States, one per register (16 items)	0 to 1	---	1	F108	0 (Off)
VT Fuse Failure (Read/Write Setting) (4 modules)						
A09A	VT Fuse Failure1 Function	0 to 1	---	1	F102	0 (Disabled)
A09B	VT Fuse Failure Neutral Wire Open1 Function	0 to 1	---	1	F102	0 (Disabled)
A09C	VT Fuse Failure Neutral Wire Open 1 3rd Harmonic Pickup	0 to 3	pu	0.001	F001	100
A09D	...Repeated for module number 2					
A0A0	...Repeated for module number 3					
A0A3	...Repeated for module number 4					
VT Fuse Failure Actuals (Read Only) (4 modules)						
A0AC	VT Fuse Failure 1 V0 3rd Harmonic	0 to 999999.999	V	0.001	F060	0
A0AE	...Repeated for module number 2					
A0B0	...Repeated for module number 3					
A0B2	...Repeated for module number 4					
Selector Switch Actual Values (Read Only)						
A210	Selector Switch 1 Position	1 to 7	---	1	F001	0
A211	Selector Switch 2 Position	1 to 7	---	1	F001	1
Selector Switch Settings (Read/Write) (2 modules)						
A280	Selector 1 Function	0 to 1	---	1	F102	0 (Disabled)
A281	Selector 1 Range	1 to 7	---	1	F001	7
A282	Selector 1 Timeout	3 to 60	s	0.1	F001	50
A283	Selector 1 Step Up	0 to 4294967295	---	1	F300	0
A285	Selector 1 Step Mode	0 to 1	---	1	F083	0 (Time-out)
A286	Selector 1 Acknowledge	0 to 4294967295	---	1	F300	0
A288	Selector 1 Bit0	0 to 4294967295	---	1	F300	0
A28A	Selector 1 Bit1	0 to 4294967295	---	1	F300	0
A28C	Selector 1 Bit2	0 to 4294967295	---	1	F300	0
A28E	Selector 1 Bit Mode	0 to 1	---	1	F083	0 (Time-out)

Table B–10: MODBUS MEMORY MAP (Sheet 49 of 72)

ADDR	REGISTER NAME	RANGE	UNITS	STEP	FORMAT	DEFAULT
A28F	Selector 1 Bit Acknowledge	0 to 4294967295	---	1	F300	0
A291	Selector 1 Power Up Mode	0 to 2	---	1	F084	0 (Restore)
A292	Selector 1 Target	0 to 2	---	1	F109	0 (Self-reset)
A293	Selector 1 Events	0 to 1	---	1	F102	0 (Disabled)
A294	Reserved (10 items)	---	---	1	F001	0
A29E	...Repeated for Selector 2					
Digital Counter (Read/Write Setting) (8 modules)						
A300	Digital Counter 1 Function	0 to 1	---	1	F102	0 (Disabled)
A301	Digital Counter 1 Name	---	---	---	F205	“Counter 1"
A307	Digital Counter 1 Units	---	---	---	F206	(none)
A30A	Digital Counter 1 Block	0 to 4294967295	---	1	F300	0
A30C	Digital Counter 1 Up	0 to 4294967295	---	1	F300	0
A30E	Digital Counter 1 Down	0 to 4294967295	---	1	F300	0
A311	Digital Counter 1 Preset	–2147483647 to 2147483647	---	1	F004	0
A313	Digital Counter 1 Compare	–2147483647 to 2147483647	---	1	F004	0
A315	Digital Counter 1 Reset	0 to 4294967295	---	1	F300	0
A317	Digital Counter 1 Freeze/Reset	0 to 4294967295	---	1	F300	0
A319	Digital Counter 1 Freeze/Count	0 to 4294967295	---	1	F300	0
A31B	Digital Counter 1 Set To Preset	0 to 4294967295	---	1	F300	0
A31D	Reserved (11 items)	---	---	---	F001	0
A328	...Repeated for Digital Counter 2					
A350	...Repeated for Digital Counter 3					
A378	...Repeated for Digital Counter 4					
A3A0	...Repeated for Digital Counter 5					
A3C8	...Repeated for Digital Counter 6					
A3F0	...Repeated for Digital Counter 7					
A418	...Repeated for Digital Counter 8					
Volts Per Hertz (Read/Write Grouped Setting) (2 modules)						
A580	Volts Per Hertz 1 Function	0 to 1	---	1	F102	0 (Disabled)
A581	Volts Per Hertz 1 Source	0 to 5	---	1	F167	0 (SRC 1)
A582	Volts Per Hertz 1 Pickup	0.8 to 4	pu	0.01	F001	80
A583	Volts Per Hertz 1 Curves	0 to 7	---	1	F240	0 (Definite Time)
A584	Volts Per Hertz 1 TD Multiplier	0.05 to 600	---	0.01	F001	100
A585	Volts Per Hertz 1 Block	0 to 4294967295	---	1	F300	0
A587	Volts Per Hertz 1 Events	0 to 1	---	1	F102	0 (Disabled)
A588	Volts Per Hertz 1 Target	0 to 2	---	1	F109	0 (Self-reset)
A589	Volts Per Hertz 1 T Reset	0 to 1000	s	0.1	F001	10
A58A	Volts Per Hertz 1 Voltage Mode	0 to 1	---	1	F186	0 (Phase to Ground)
A58B	...Repeated for Volts Per Hertz 2					
Volts Per Hertz Actual Values (Read Only) (2 modules)						
A5A0	Volts Per Hertz 1	0 to 65.535	pu	0.001	F001	0
A5A1	Volts Per Hertz 2	0 to 65.535	pu	0.001	F001	0
FlexCurves C and D (Read/Write Setting)						
A600	FlexCurve C (120 items)	0 to 65535	ms	1	F011	0
A680	FlexCurve D (120 items)	0 to 65535	ms	1	F011	0
Non Volatile Latches (Read/Write Setting) (16 modules)						
A700	Non-Volatile Latch 1 Function	0 to 1	---	1	F102	0 (Disabled)
A701	Non-Volatile Latch 1 Type	0 to 1	---	1	F519	0 (Reset Dominant)
A702	Non-Volatile Latch 1 Set	0 to 4294967295	---	1	F300	0
A704	Non-Volatile Latch 1 Reset	0 to 4294967295	---	1	F300	0
A706	Non-Volatile Latch 1 Target	0 to 2	---	1	F109	0 (Self-reset)

Table B–10: MODBUS MEMORY MAP (Sheet 50 of 72)

ADDR	REGISTER NAME	RANGE	UNITS	STEP	FORMAT	DEFAULT
A707	Non-Volatile Latch 1 Events	0 to 1	---	1	F102	0 (Disabled)
A708	Reserved (4 items)	---	---	---	F001	0
A70C	...Repeated for Non-Volatile Latch 2					
A718	...Repeated for Non-Volatile Latch 3					
A724	...Repeated for Non-Volatile Latch 4					
A730	...Repeated for Non-Volatile Latch 5					
A73C	...Repeated for Non-Volatile Latch 6					
A748	...Repeated for Non-Volatile Latch 7					
A754	...Repeated for Non-Volatile Latch 8					
A760	...Repeated for Non-Volatile Latch 9					
A76C	...Repeated for Non-Volatile Latch 10					
A778	...Repeated for Non-Volatile Latch 11					
A784	...Repeated for Non-Volatile Latch 12					
A790	...Repeated for Non-Volatile Latch 13					
A79C	...Repeated for Non-Volatile Latch 14					
A7A8	...Repeated for Non-Volatile Latch 15					
A7B4	...Repeated for Non-Volatile Latch 16					
Frequency Rate of Change (Read/Write Setting) (4 modules)						
A900	Frequency Rate of Change 1 Function	0 to 1	---	1	F102	0 (Disabled)
A901	Frequency Rate of Change 1 OC Supervision	0 to 30	pu	0.001	F001	200
A902	Frequency Rate of Change 1 Min	20 to 80	Hz	0.01	F001	4500
A903	Frequency Rate of Change 1 Max	20 to 80	Hz	0.01	F001	6500
A904	Frequency Rate of Change 1 Pickup Delay	0 to 65.535	s	0.001	F001	0
A905	Frequency Rate of Change 1 Reset Delay	0 to 65.535	s	0.001	F001	0
A906	Frequency Rate of Change 1 Block	0 to 4294967295	---	1	F300	0
A908	Frequency Rate of Change 1 Target	0 to 2	---	1	F109	0 (Self-reset)
A909	Frequency Rate of Change 1 Events	0 to 1	---	1	F102	0 (Disabled)
A90A	Frequency Rate of Change 1 Source	0 to 5	---	1	F167	0 (SRC 1)
A90B	Frequency Rate of Change 1 Trend	0 to 2	---	1	F224	0 (Increasing)
A90C	Frequency Rate of Change 1 Pickup	0.1 to 15	Hz/s	0.01	F001	50
A90D	Frequency Rate of Change 1 OV Supervision	0.1 to 3	pu	0.001	F001	700
A90E	Reserved (3 items)	0 to 1	---	1	F001	0
A911	...Repeated for Frequency Rate of Change 2					
A922	...Repeated for Frequency Rate of Change 3					
A933	...Repeated for Frequency Rate of Change 4					
Restricted Ground Fault (Read/Write Grouped Setting) (6 modules)						
A960	Restricted Ground Fault 1 Function	0 to 1	---	1	F102	0 (Disabled)
A961	Restricted Ground Fault 1 Source	0 to 5	---	1	F167	0 (SRC 1)
A962	Restricted Ground Fault 1 Pickup	0.005 to 30	pu	0.001	F001	80
A963	Restricted Ground Fault 1 Slope	0 to 100	%	1	F001	40
A964	Restricted Ground Fault 1 Delay	0 to 600	s	0.01	F001	0
A965	Restricted Ground Fault 1 Reset Delay	0 to 600	s	0.01	F001	0
A966	Restricted Ground Fault 1 Block	0 to 4294967295	---	1	F300	0
A968	Restricted Ground Fault 1 Target	0 to 2	---	1	F109	0 (Self-reset)
A969	Restricted Ground Fault 1 Events	0 to 1	---	1	F102	0 (Disabled)
A96A	...Repeated for Restricted Ground Fault 2					
A974	...Repeated for Restricted Ground Fault 3					
A97E	...Repeated for Restricted Ground Fault 4					
A988	...Repeated for Restricted Ground Fault 5					
A992	...Repeated for Restricted Ground Fault 6					
IEC 61850 Received Analog Settings (Read/Write Setting) (32 modules)						
AA00	IEC 61850 GOOSE Analog 1 Default Value	–1000000 to 1000000	---	0.001	F060	1000
AA02	IEC 61850 GOOSE Analog Input 1 Mode	0 to 1	---	1	F491	0 (Default Value)
AA03	IEC 61850 GOOSE Analog Input 1 Units	---	---	---	F207	(none)

Table B–10: MODBUS MEMORY MAP (Sheet 51 of 72)

ADDR	REGISTER NAME	RANGE	UNITS	STEP	FORMAT	DEFAULT
AA05	IEC 61850 GOOSE Analog Input 1 Per-Unit Base	0 to 999999999.999	---	0.001	F060	1
AA07	...Repeated for IEC 61850 GOOSE Analog Input 2					
AA0E	...Repeated for IEC 61850 GOOSE Analog Input 3					
AA15	...Repeated for IEC 61850 GOOSE Analog Input 4					
AA1C	...Repeated for IEC 61850 GOOSE Analog Input 5					
AA23	...Repeated for IEC 61850 GOOSE Analog Input 6					
AA2A	...Repeated for IEC 61850 GOOSE Analog Input 7					
AA31	...Repeated for IEC 61850 GOOSE Analog Input 8					
AA38	...Repeated for IEC 61850 GOOSE Analog Input 9					
AA3F	...Repeated for IEC 61850 GOOSE Analog Input 10					
AA46	...Repeated for IEC 61850 GOOSE Analog Input 11					
AA4D	...Repeated for IEC 61850 GOOSE Analog Input 12					
AA54	...Repeated for IEC 61850 GOOSE Analog Input 13					
AA5B	...Repeated for IEC 61850 GOOSE Analog Input 14					
AA62	...Repeated for IEC 61850 GOOSE Analog Input 15					
AA69	...Repeated for IEC 61850 GOOSE Analog Input 16					
AA70	...Repeated for IEC 61850 GOOSE Analog Input 17					
AA77	...Repeated for IEC 61850 GOOSE Analog Input 18					
AA7E	...Repeated for IEC 61850 GOOSE Analog Input 19					
AA85	...Repeated for IEC 61850 GOOSE Analog Input 20					
AA8C	...Repeated for IEC 61850 GOOSE Analog Input 21					
AA93	...Repeated for IEC 61850 GOOSE Analog Input 22					
AA9A	...Repeated for IEC 61850 GOOSE Analog Input 23					
AAA1	...Repeated for IEC 61850 GOOSE Analog Input 24					
AAA8	...Repeated for IEC 61850 GOOSE Analog Input 25					
AAAF	...Repeated for IEC 61850 GOOSE Analog Input 26					
AAB6	...Repeated for IEC 61850 GOOSE Analog Input 27					
AABD	...Repeated for IEC 61850 GOOSE Analog Input 28					
AAC4	...Repeated for IEC 61850 GOOSE Analog Input 29					
AACB	...Repeated for IEC 61850 GOOSE Analog Input 30					
AAD2	...Repeated for IEC 61850 GOOSE Analog Input 31					
AAD9	...Repeated for IEC 61850 GOOSE Analog Input 32					
IEC 61850 XCBR Configuration (Read/Write Settings and Commands) (6 modules)						
AB00	FlexLogic Operand for IEC 61850 XCBR1.ST.Loc status	0 to 4294967295	---	1	F300	0
AB02	Command to Clear XCBR1 OpCnt (Operation Counter	0 to 1	---	1	F126	0 (No)
AB03	FlexLogic Operand for IEC 61850 XCBR Check Sync Release	0 to 4294967295	---	1	F300	0
AB05	FlexLogic Operand for IEC 61850 XCBR Open Interlock	0 to 4294967295	---	1	F300	0
AB07	FlexLogic Operand for IEC 61850 XCBR Close Interlock	0 to 4294967295	---	1	F300	0
AB09	FlexLogic Operand for IEC 61850 XCBR Pos ct1Model	0 to 4	---	1	F001	2
AB0A	FlexLogic Operand for IEC 61850 XCBR Pos sboTimeout	2 to 60	s	1	F001	30
AB0B	...Repeated for Module 2					
AB16	...Repeated for Module 3					
AB21	...Repeated for Module 4					
AB2C	...Repeated for Module 5					
AB37	...Repeated for Module 6					
IEC 61850 LN Name Prefixes (Read/Write Settings)						
AB48	IEC 61850 Logical Node LPHD1 Name Prefix	0 to 65534	---	1	F206	(none)
AB4B	IEC 61850 Logical Node PIOCx Name Prefix (72 items)	0 to 65534	---	1	F206	(none)
AC23	IEC 61850 Logical Node PTOCx Name Prefix (24 items)	0 to 65534	---	1	F206	(none)
AC6B	IEC 61850 Logical Node PTUVx Name Prefix (13 items)	0 to 65534	---	1	F206	(none)
AC92	IEC 61850 Logical Node PTOVx Name Prefix (10 items)	0 to 65534	---	1	F206	(none)
ACB6	IEC 61850 Logical Node PDISx Name Prefix (10 items)	0 to 65534	---	1	F206	(none)
ACD4	IEC 61850 Logical Node RBRFx Name Prefix (24 items)	0 to 65534	---	1	F206	(none)

Table B–10: MODBUS MEMORY MAP (Sheet 52 of 72)

ADDR	REGISTER NAME	RANGE	UNITS	STEP	FORMAT	DEFAULT
AD1C	IEC 61850 Logical Node RPSBx Name Prefix	0 to 65534	---	1	F206	(none)
AD1F	IEC 61850 Logical Node RRECx Name Prefix (6 items)	0 to 65534	---	1	F206	(none)
AD31	IEC 61850 Logical Node MMXUx Name Prefix (6 items)	0 to 65534	---	1	F206	(none)
AD43	IEC 61850 Logical Node GGIOx Name Prefix (5 items)	0 to 65534	---	1	F206	(none)
AD52	IEC 61850 Logical Node RFLOx Name Prefix (5 items)	0 to 65534	---	1	F206	(none)
AD61	IEC 61850 Logical Node XCBRx Name Prefix (6 items)	0 to 65534	---	1	F206	(none)
AD73	IEC 61850 Logical Node PTRCx Name Prefix (6 items)	0 to 65534	---	1	F206	(none)
AD85	IEC 61850 Logical Node PDIFx Name Prefix (4 items)	0 to 65534	---	1	F206	(none)
AD91	IEC 61850 Logical Node MMXNx Name Prefix (37 items)	0 to 65534	---	1	F206	(none)
AE00	IEC 61850 Logical Node CSWIx Name Prefix (30 items)	0 to 65534	---	1	F206	(none)
AE5A	IEC 61850 Logical Node XSWIx Name Prefix (24 items)	0 to 65534	---	1	F206	(none)
IEC 61850 GGIO4 General Analog Configuration Settings (Read/Write)						
AF00	Number of Analog Input Points in GGIO4	4 to 32	---	4	F001	4
IEC 61850 GGIO4 Analog Input Points Configuration Settings (Read/Write Setting) (32 modules)						
AF10	IEC 61850 GGIO4 Analog Input 1 Value	---	---	---	F600	0
AF11	IEC 61850 GGIO4 Analog Input 1 Deadband	0.001 to 100	%	0.001	F003	100000
AF13	IEC 61850 GGIO4 Analog Input 1 Minimum	–1000000000000 to 1000000000000	---	0.001	F060	0
AF15	IEC 61850 GGIO4 Analog Input 1 Maximum	–1000000000000 to 1000000000000	---	0.001	F060	1000000
AF17	...Repeated for IEC 61850 GGIO4 Analog Input 2					
AF1E	...Repeated for IEC 61850 GGIO4 Analog Input 3					
AF25	...Repeated for IEC 61850 GGIO4 Analog Input 4					
AF2C	...Repeated for IEC 61850 GGIO4 Analog Input 5					
AF33	...Repeated for IEC 61850 GGIO4 Analog Input 6					
AF3A	...Repeated for IEC 61850 GGIO4 Analog Input 7					
AF41	...Repeated for IEC 61850 GGIO4 Analog Input 8					
AF48	...Repeated for IEC 61850 GGIO4 Analog Input 9					
AF4F	...Repeated for IEC 61850 GGIO4 Analog Input 10					
AF56	...Repeated for IEC 61850 GGIO4 Analog Input 11					
AF5D	...Repeated for IEC 61850 GGIO4 Analog Input 12					
AF64	...Repeated for IEC 61850 GGIO4 Analog Input 13					
AF6B	...Repeated for IEC 61850 GGIO4 Analog Input 14					
AF72	...Repeated for IEC 61850 GGIO4 Analog Input 15					
AF79	...Repeated for IEC 61850 GGIO4 Analog Input 16					
AF80	...Repeated for IEC 61850 GGIO4 Analog Input 17					
AF87	...Repeated for IEC 61850 GGIO4 Analog Input 18					
AF8E	...Repeated for IEC 61850 GGIO4 Analog Input 19					
AF95	...Repeated for IEC 61850 GGIO4 Analog Input 20					
AF9C	...Repeated for IEC 61850 GGIO4 Analog Input 21					
AFA3	...Repeated for IEC 61850 GGIO4 Analog Input 22					
AFAA	...Repeated for IEC 61850 GGIO4 Analog Input 23					
AFB1	...Repeated for IEC 61850 GGIO4 Analog Input 24					
AFB8	...Repeated for IEC 61850 GGIO4 Analog Input 25					
AFBF	...Repeated for IEC 61850 GGIO4 Analog Input 26					
AFC6	...Repeated for IEC 61850 GGIO4 Analog Input 27					
AFCD	...Repeated for IEC 61850 GGIO4 Analog Input 28					
AFD4	...Repeated for IEC 61850 GGIO4 Analog Input 29					
AFDB	...Repeated for IEC 61850 GGIO4 Analog Input 30					
AFE2	...Repeated for IEC 61850 GGIO4 Analog Input 31					
AFE9	...Repeated for IEC 61850 GGIO4 Analog Input 32					
IEC 61850 GOOSE/GSSE Configuration (Read/Write Setting)						
B01C	Default GOOSE/GSSE Update Time	1 to 60	s	1	F001	60
B01D	IEC 61850 GSSE Function (GsEna)	0 to 1	---	1	F102	1 (Enabled)
B01E	IEC 61850 GSSE ID	---	---	---	F209	“GSSEOut”

Table B–10: MODBUS MEMORY MAP (Sheet 53 of 72)

ADDR	REGISTER NAME	RANGE	UNITS	STEP	FORMAT	DEFAULT
B03F	IEC 61850 GOOSE Function (GoEna)	0 to 1	---	1	F102	0 (Disabled)
B040	IEC 61850 GSSE Destination MAC Address	---	---	---	F072	0
B043	IEC 61850 Standard GOOSE ID	---	---	---	F209	"GOOSEOut"
B064	IEC 61850 Standard GOOSE Destination MAC Address	---	---	---	F072	0
B067	IEC 61850 GOOSE VLAN Transmit Priority	0 to 7	---	1	F001	4
B068	IEC 61850 GOOSE VLAN ID	0 to 4095	---	1	F001	0
B069	IEC 61850 GOOSE ETYPE APPID	0 to 16383	---	1	F001	0
B06A	Reserved (2 items)	0 to 1	---	1	F001	0
IEC 61850 Server Configuration (Read/Write Settings/Commands)						
B06C	TCP Port Number for the IEC 61850 / MMS Protocol	0 to 65535	---	1	F001	102
B06D	IEC 61850 Logical Device Name	---	---	---	F213	"IEDName"
B07D	IEC 61850 Logical Device Instance	---	---	---	F213	"LDInst"
B08D	IEC 61850 LPHD Location	0 to 65534	---	1	F204	"Location"
B0B5	Include non-IEC 61850 Data	0 to 1	---	1	F102	0 (Disabled)
B0B6	IEC 61850 Server Data Scanning Function	0 to 1	---	1	F102	0 (Disabled)
B0B7	IEC 61850 LPHD Latitude	-90 to 90	degrees	0.001	F004	0
B0B9	IEC 61850 LPHD DC PhyNam Longitude	-180 to 180	degrees	0.001	F004	0
B9BB	IEC 61850 LPHD DC PhyNam Altitude	0 to 10000	m	1	F003	0
B0BD	Reserved (3 items)	0 to 1	---	1	F001	0
IEC 61850 MMXU Deadbands (Read/Write Setting) (6 modules)						
B0C0	IEC 61850 MMXU TotW Deadband 1	0.001 to 100	%	0.001	F003	10000
B0C2	IEC 61850 MMXU TotVAr Deadband 1	0.001 to 100	%	0.001	F003	10000
B0C4	IEC 61850 MMXU TotVA Deadband 1	0.001 to 100	%	0.001	F003	10000
B0C6	IEC 61850 MMXU TotPF Deadband 1	0.001 to 100	%	0.001	F003	10000
B0C8	IEC 61850 MMXU Hz Deadband 1	0.001 to 100	%	0.001	F003	10000
B0CA	IEC 61850 MMXU PPV.phsAB Deadband 1	0.001 to 100	%	0.001	F003	10000
B0CC	IEC 61850 MMXU PPV.phsBC Deadband 1	0.001 to 100	%	0.001	F003	10000
B0CE	IEC 61850 MMXU PPV.phsCA Deadband 1	0.001 to 100	%	0.001	F003	10000
B0D0	IEC 61850 MMXU PhV.phsA Deadband 1	0.001 to 100	%	0.001	F003	10000
B0D2	IEC 61850 MMXU PhV.phsB Deadband 1	0.001 to 100	%	0.001	F003	10000
B0D4	IEC 61850 MMXU PhV.phsC Deadband 1	0.001 to 100	%	0.001	F003	10000
B0D6	IEC 61850 MMXU A.phsA Deadband 1	0.001 to 100	%	0.001	F003	10000
B0D8	IEC 61850 MMXU A.phsB Deadband 1	0.001 to 100	%	0.001	F003	10000
B0DA	IEC 61850 MMXU A.phsC Deadband 1	0.001 to 100	%	0.001	F003	10000
B0DC	IEC 61850 MMXU A.neut Deadband 1	0.001 to 100	%	0.001	F003	10000
B0DE	IEC 61850 MMXU W.phsA Deadband 1	0.001 to 100	%	0.001	F003	10000
B0E0	IEC 61850 MMXU W.phsB Deadband 1	0.001 to 100	%	0.001	F003	10000
B0E2	IEC 61850 MMXU W.phsC Deadband 1	0.001 to 100	%	0.001	F003	10000
B0E4	IEC 61850 MMXU VAr.phsA Deadband 1	0.001 to 100	%	0.001	F003	10000
B0E6	IEC 61850 MMXU VAr.phsB Deadband 1	0.001 to 100	%	0.001	F003	10000
B0E8	IEC 61850 MMXU VAr.phsC Deadband 1	0.001 to 100	%	0.001	F003	10000
B0EA	IEC 61850 MMXU VA.phsA Deadband 1	0.001 to 100	%	0.001	F003	10000
B0EC	IEC 61850 MMXU VA.phsB Deadband 1	0.001 to 100	%	0.001	F003	10000
B0EE	IEC 61850 MMXU VA.phsC Deadband 1	0.001 to 100	%	0.001	F003	10000
B0F0	IEC 61850 MMXU PF.phsA Deadband 1	0.001 to 100	%	0.001	F003	10000
B0F2	IEC 61850 MMXU PF.phsB Deadband 1	0.001 to 100	%	0.001	F003	10000
B0F4	IEC 61850 MMXU PF.phsC Deadband 1	0.001 to 100	%	0.001	F003	10000
B0F6	...Repeated for Deadband 2					
B12C	...Repeated for Deadband 3					
B162	...Repeated for Deadband 4					
B198	...Repeated for Deadband 5					
B1CE	...Repeated for Deadband 6					

Table B–10: MODBUS MEMORY MAP (Sheet 54 of 72)

ADDR	REGISTER NAME	RANGE	UNITS	STEP	FORMAT	DEFAULT
IEC 61850 Received Analogs (Read Only) (32 modules)						
B210	IEC 61850 Received Analog 1	-1000000000000 to 1000000000000	---	0.001	F060	0
B212	...Repeated for Received Analog 2					
B214	...Repeated for Received Analog 3					
B216	...Repeated for Received Analog 4					
B218	...Repeated for Received Analog 5					
B21A	...Repeated for Received Analog 6					
B21C	...Repeated for Received Analog 7					
B21E	...Repeated for Received Analog 8					
B220	...Repeated for Received Analog 9					
B222	...Repeated for Received Analog 10					
B224	...Repeated for Received Analog 11					
B226	...Repeated for Received Analog 12					
B228	...Repeated for Received Analog 13					
B22A	...Repeated for Received Analog 14					
B22C	...Repeated for Received Analog 15					
B22E	...Repeated for Received Analog 16					
B230	...Repeated for Received Analog 17					
B232	...Repeated for Received Analog 18					
B234	...Repeated for Received Analog 19					
B236	...Repeated for Received Analog 20					
B238	...Repeated for Received Analog 21					
B23A	...Repeated for Received Analog 22					
B23C	...Repeated for Received Analog 23					
B23E	...Repeated for Received Analog 24					
B240	...Repeated for Received Analog 25					
B242	...Repeated for Received Analog 26					
B244	...Repeated for Received Analog 27					
B246	...Repeated for Received Analog 28					
B248	...Repeated for Received Analog 29					
B24A	...Repeated for Received Analog 30					
B24C	...Repeated for Received Analog 31					
B24E	...Repeated for Received Analog 32					
IEC 61850 Configurable Report Settings (Read/Write Setting)						
B290	IEC 61850 Configurable Reports Dataset Items (64 items)	0 to 848	---	1	F615	0 (None)
IEC 61850 XSWI Configuration (Read/Write Setting) (24 modules)						
B370	FlexLogic Operand for IEC 61850 XSWI.ST.Loc Status	0 to 4294967295	---	1	F300	0
B373	...Repeated for module number 2					
B376	...Repeated for module number 3					
B379	...Repeated for module number 4					
B37C	...Repeated for module number 5					
B37F	...Repeated for module number 6					
B382	...Repeated for module number 7					
B385	...Repeated for module number 8					
B388	...Repeated for module number 9					
B38B	...Repeated for module number 10					
B38E	...Repeated for module number 11					
B391	...Repeated for module number 12					
B394	...Repeated for module number 13					
B397	...Repeated for module number 14					
B39A	...Repeated for module number 15					
B39D	...Repeated for module number 16					
B3A0	...Repeated for module number 17					

Table B–10: MODBUS MEMORY MAP (Sheet 55 of 72)

ADDR	REGISTER NAME	RANGE	UNITS	STEP	FORMAT	DEFAULT
B3A3	...Repeated for module number 18					
B3A6	...Repeated for module number 19					
B3A9	...Repeated for module number 20					
B3AC	...Repeated for module number 21					
B3AF	...Repeated for module number 22					
B3B2	...Repeated for module number 23					
B3B5	...Repeated for module number 24					
IEC 61850 XSWI Configuration (Read/Write Command) (24 modules)						
B372	Command to Clear XSWI OpCnt (Operation Counter)	0 to 1	---	1	F126	0 (No)
IEC 61850 GGIO1 Configuration Settings (Read/Write Setting)						
B400	Number of Status Indications in GGIO1	8 to 128	---	8	F001	8
B402	IEC 61850 GGIO1 Indication FlexLogic operands (128 items)	0 to 4294967295	---	1	F300	0
IEC 61850 Configurable GOOSE Transmission (Read/Write Setting) (8 modules)						
B5A0	IEC 61850 Configurable GOOSE Function (GoEna)	0 to 1	---	1	F102	1 (Enabled)
B5A1	IEC 61850 Configurable GOOSE ID	---	---	---	F209	“GOOSEOut_x_”
B5C2	Configurable GOOSE Destination MAC Address	---	---	---	F072	0
B5C5	IEC 61850 Configurable GOOSE VLAN Transmit Priority	0 to 7	---	1	F001	4
B5C6	IEC 61850 Configurable GOOSE VLAN ID	0 to 4095	---	1	F001	0
B5C7	IEC 61850 Configurable GOOSE ETYPE APPID	0 to 16383	---	1	F001	0
B5C8	IEC 61850 Configurable GOOSE ConfRev (Configuration Revision)	1 to 4294967295	---	1	F003	1
B5CA	IEC 61850 Configurable GOOSE Retransmission Curve	0 to 3	---	1	F611	3 (Relaxed)
B5CB	Configurable GOOSE Dataset Items for Transmission (64 items)	0 to 1008	---	1	F616	0 (None)
B60B	...Repeated for module number 2					
B676	...Repeated for module number 3					
B6E1	...Repeated for module number 4					
B74C	...Repeated for module number 5					
B7B7	...Repeated for module number 6					
B822	...Repeated for module number 7					
B88D	...Repeated for module number 8					
IEC 61850 Configurable GOOSE Reception (Read/Write Setting) (16 modules)						
B900	Configurable GOOSE Dataset Items for Reception (32 items)	0 to 197	---	1	F233	0 (None)
B920	...Repeated for module number 2					
B940	...Repeated for module number 3					
B960	...Repeated for module number 4					
B980	...Repeated for module number 5					
B9A0	...Repeated for module number 6					
B9C0	...Repeated for module number 7					
B9E0	...Repeated for module number 8					
BA00	...Repeated for module number 9					
BA20	...Repeated for module number 10					
BA40	...Repeated for module number 11					
BA60	...Repeated for module number 12					
BA80	...Repeated for module number 13					
BAA0	...Repeated for module number 14					
BAC0	...Repeated for module number 15					
BAE0	...Repeated for module number 16					
Contact Inputs (Read/Write Setting) (96 modules)						
BB00	Contact Input 1 Name	---	---	---	F205	“Cont Ip 1“
BB06	Contact Input 1 Events	0 to 1	---	1	F102	0 (Disabled)
BB07	Contact Input 1 Debounce Time	0 to 16	ms	0.5	F001	20
BB08	...Repeated for Contact Input 2					

Table B–10: MODBUS MEMORY MAP (Sheet 56 of 72)

ADDR	REGISTER NAME	RANGE	UNITS	STEP	FORMAT	DEFAULT
BB10	...Repeated for Contact Input 3					
BB18	...Repeated for Contact Input 4					
BB20	...Repeated for Contact Input 5					
BB28	...Repeated for Contact Input 6					
BB30	...Repeated for Contact Input 7					
BB38	...Repeated for Contact Input 8					
BB40	...Repeated for Contact Input 9					
BB48	...Repeated for Contact Input 10					
BB50	...Repeated for Contact Input 11					
BB58	...Repeated for Contact Input 12					
BB60	...Repeated for Contact Input 13					
BB68	...Repeated for Contact Input 14					
BB70	...Repeated for Contact Input 15					
BB78	...Repeated for Contact Input 16					
BB80	...Repeated for Contact Input 17					
BB88	...Repeated for Contact Input 18					
BB90	...Repeated for Contact Input 19					
BB98	...Repeated for Contact Input 20					
BBA0	...Repeated for Contact Input 21					
BBA8	...Repeated for Contact Input 22					
BBB0	...Repeated for Contact Input 23					
BBB8	...Repeated for Contact Input 24					
BBC0	...Repeated for Contact Input 25					
BBC8	...Repeated for Contact Input 26					
BBD0	...Repeated for Contact Input 27					
BBD8	...Repeated for Contact Input 28					
BBE0	...Repeated for Contact Input 29					
BBE8	...Repeated for Contact Input 30					
BBF0	...Repeated for Contact Input 31					
BBF8	...Repeated for Contact Input 32					
BC00	...Repeated for Contact Input 33					
BC08	...Repeated for Contact Input 34					
BC10	...Repeated for Contact Input 35					
BC18	...Repeated for Contact Input 36					
BC20	...Repeated for Contact Input 37					
BC28	...Repeated for Contact Input 38					
BC30	...Repeated for Contact Input 39					
BC38	...Repeated for Contact Input 40					
BC40	...Repeated for Contact Input 41					
BC48	...Repeated for Contact Input 42					
BC50	...Repeated for Contact Input 43					
BC58	...Repeated for Contact Input 44					
BC60	...Repeated for Contact Input 45					
BC68	...Repeated for Contact Input 46					
BC70	...Repeated for Contact Input 47					
BC78	...Repeated for Contact Input 48					
BC80	...Repeated for Contact Input 49					
BC88	...Repeated for Contact Input 50					
BC90	...Repeated for Contact Input 51					
BC98	...Repeated for Contact Input 52					
BCA0	...Repeated for Contact Input 53					
BCA8	...Repeated for Contact Input 54					
BCB0	...Repeated for Contact Input 55					
BCB8	...Repeated for Contact Input 56					

Table B–10: MODBUS MEMORY MAP (Sheet 57 of 72)

ADDR	REGISTER NAME	RANGE	UNITS	STEP	FORMAT	DEFAULT
BCC0	...Repeated for Contact Input 57					
BCC8	...Repeated for Contact Input 58					
BCD0	...Repeated for Contact Input 59					
BCD8	...Repeated for Contact Input 60					
BCE0	...Repeated for Contact Input 61					
BCE8	...Repeated for Contact Input 62					
BCF0	...Repeated for Contact Input 63					
BCF8	...Repeated for Contact Input 64					
BD00	...Repeated for Contact Input 65					
BD08	...Repeated for Contact Input 66					
BD10	...Repeated for Contact Input 67					
BD18	...Repeated for Contact Input 68					
BD20	...Repeated for Contact Input 69					
BD28	...Repeated for Contact Input 70					
BD30	...Repeated for Contact Input 71					
BD38	...Repeated for Contact Input 72					
BD40	...Repeated for Contact Input 73					
BD48	...Repeated for Contact Input 74					
BD50	...Repeated for Contact Input 75					
BD58	...Repeated for Contact Input 76					
BD60	...Repeated for Contact Input 77					
BD68	...Repeated for Contact Input 78					
BD70	...Repeated for Contact Input 79					
BD78	...Repeated for Contact Input 80					
BD80	...Repeated for Contact Input 81					
BD88	...Repeated for Contact Input 82					
BD90	...Repeated for Contact Input 83					
BD98	...Repeated for Contact Input 84					
BDA0	...Repeated for Contact Input 85					
BDA8	...Repeated for Contact Input 86					
BDB0	...Repeated for Contact Input 87					
BDB8	...Repeated for Contact Input 88					
BDC0	...Repeated for Contact Input 89					
BDC8	...Repeated for Contact Input 90					
BDD0	...Repeated for Contact Input 91					
BDD8	...Repeated for Contact Input 92					
BDE0	...Repeated for Contact Input 93					
BDE8	...Repeated for Contact Input 94					
BDF0	...Repeated for Contact Input 95					
BDF8	...Repeated for Contact Input 96					
Contact Input Thresholds (Read/Write Setting)						
BE00	Contact Input *n* Threshold, *n* = 1 to 48 (48 items)	0 to 3	---	1	F128	1 (33 Vdc)
Virtual Inputs (Read/Write Setting) (64 modules)						
BE30	Virtual Input 1 Function	0 to 1	---	1	F102	0 (Disabled)
BE31	Virtual Input 1 Name	---	---	---	F205	“Virt Ip 1“
BE37	Virtual Input 1 Programmed Type	0 to 1	---	1	F127	0 (Latched)
BE38	Virtual Input 1 Events	0 to 1	---	1	F102	0 (Disabled)
BE39	Reserved (3 items)	---	---	---	F001	0
BE3C	...Repeated for Virtual Input 2					
BE48	...Repeated for Virtual Input 3					
BE54	...Repeated for Virtual Input 4					
BE60	...Repeated for Virtual Input 5					
BE6C	...Repeated for Virtual Input 6					
BE78	...Repeated for Virtual Input 7					

Table B–10: MODBUS MEMORY MAP (Sheet 58 of 72)

ADDR	REGISTER NAME	RANGE	UNITS	STEP	FORMAT	DEFAULT
BE84	...Repeated for Virtual Input 8					
BE90	...Repeated for Virtual Input 9					
BE9C	...Repeated for Virtual Input 10					
BEA8	...Repeated for Virtual Input 11					
BEB4	...Repeated for Virtual Input 12					
BEC0	...Repeated for Virtual Input 13					
BECC	...Repeated for Virtual Input 14					
BED8	...Repeated for Virtual Input 15					
BEE4	...Repeated for Virtual Input 16					
BEF0	...Repeated for Virtual Input 17					
BEFC	...Repeated for Virtual Input 18					
BF08	...Repeated for Virtual Input 19					
BF14	...Repeated for Virtual Input 20					
BF20	...Repeated for Virtual Input 21					
BF2C	...Repeated for Virtual Input 22					
BF38	...Repeated for Virtual Input 23					
BF44	...Repeated for Virtual Input 24					
BF50	...Repeated for Virtual Input 25					
BF5C	...Repeated for Virtual Input 26					
BF68	...Repeated for Virtual Input 27					
BF74	...Repeated for Virtual Input 28					
BF80	...Repeated for Virtual Input 29					
BF8C	...Repeated for Virtual Input 30					
BF98	...Repeated for Virtual Input 31					
BFA4	...Repeated for Virtual Input 32					
BFB0	...Repeated for Virtual Input 33					
BFBC	...Repeated for Virtual Input 34					
BFC8	...Repeated for Virtual Input 35					
BFD4	...Repeated for Virtual Input 36					
BFE0	...Repeated for Virtual Input 37					
BFEC	...Repeated for Virtual Input 38					
BFF8	...Repeated for Virtual Input 39					
C004	...Repeated for Virtual Input 40					
C010	...Repeated for Virtual Input 41					
C01C	...Repeated for Virtual Input 42					
C028	...Repeated for Virtual Input 43					
C034	...Repeated for Virtual Input 44					
C040	...Repeated for Virtual Input 45					
C04C	...Repeated for Virtual Input 46					
C058	...Repeated for Virtual Input 47					
C064	...Repeated for Virtual Input 48					
C070	...Repeated for Virtual Input 49					
C07C	...Repeated for Virtual Input 50					
C088	...Repeated for Virtual Input 51					
C094	...Repeated for Virtual Input 52					
C0A0	...Repeated for Virtual Input 53					
C0AC	...Repeated for Virtual Input 54					
C0B8	...Repeated for Virtual Input 55					
C0C4	...Repeated for Virtual Input 56					
C0D0	...Repeated for Virtual Input 57					
C0DC	...Repeated for Virtual Input 58					
C0E8	...Repeated for Virtual Input 59					
C0F4	...Repeated for Virtual Input 60					
C100	...Repeated for Virtual Input 61					

Table B–10: MODBUS MEMORY MAP (Sheet 59 of 72)

ADDR	REGISTER NAME	RANGE	UNITS	STEP	FORMAT	DEFAULT
C10C	...Repeated for Virtual Input 62					
C118	...Repeated for Virtual Input 63					
C124	...Repeated for Virtual Input 64					
Virtual Outputs (Read/Write Setting) (96 modules)						
C130	Virtual Output 1 Name	---	---	---	F205	"Virt Op 1 "
C136	Virtual Output 1 Events	0 to 1	---	1	F102	0 (Disabled)
C137	Reserved	---	---	---	F001	0
C138	...Repeated for Virtual Output 2					
C140	...Repeated for Virtual Output 3					
C148	...Repeated for Virtual Output 4					
C150	...Repeated for Virtual Output 5					
C158	...Repeated for Virtual Output 6					
C160	...Repeated for Virtual Output 7					
C168	...Repeated for Virtual Output 8					
C170	...Repeated for Virtual Output 9					
C178	...Repeated for Virtual Output 10					
C180	...Repeated for Virtual Output 11					
C188	...Repeated for Virtual Output 12					
C190	...Repeated for Virtual Output 13					
C198	...Repeated for Virtual Output 14					
C1A0	...Repeated for Virtual Output 15					
C1A8	...Repeated for Virtual Output 16					
C1B0	...Repeated for Virtual Output 17					
C1B8	...Repeated for Virtual Output 18					
C1C0	...Repeated for Virtual Output 19					
C1C8	...Repeated for Virtual Output 20					
C1D0	...Repeated for Virtual Output 21					
C1D8	...Repeated for Virtual Output 22					
C1E0	...Repeated for Virtual Output 23					
C1E8	...Repeated for Virtual Output 24					
C1F0	...Repeated for Virtual Output 25					
C1F8	...Repeated for Virtual Output 26					
C200	...Repeated for Virtual Output 27					
C208	...Repeated for Virtual Output 28					
C210	...Repeated for Virtual Output 29					
C218	...Repeated for Virtual Output 30					
C220	...Repeated for Virtual Output 31					
C228	...Repeated for Virtual Output 32					
C230	...Repeated for Virtual Output 33					
C238	...Repeated for Virtual Output 34					
C240	...Repeated for Virtual Output 35					
C248	...Repeated for Virtual Output 36					
C250	...Repeated for Virtual Output 37					
C258	...Repeated for Virtual Output 38					
C260	...Repeated for Virtual Output 39					
C268	...Repeated for Virtual Output 40					
C270	...Repeated for Virtual Output 41					
C278	...Repeated for Virtual Output 42					
C280	...Repeated for Virtual Output 43					
C288	...Repeated for Virtual Output 44					
C290	...Repeated for Virtual Output 45					
C298	...Repeated for Virtual Output 46					
C2A0	...Repeated for Virtual Output 47					
C2A8	...Repeated for Virtual Output 48					

Table B–10: MODBUS MEMORY MAP (Sheet 60 of 72)

ADDR	REGISTER NAME	RANGE	UNITS	STEP	FORMAT	DEFAULT
C2B0	...Repeated for Virtual Output 49					
C2B8	...Repeated for Virtual Output 50					
C2C0	...Repeated for Virtual Output 51					
C2C8	...Repeated for Virtual Output 52					
C2D0	...Repeated for Virtual Output 53					
C2D8	...Repeated for Virtual Output 54					
C2E0	...Repeated for Virtual Output 55					
C2E8	...Repeated for Virtual Output 56					
C2F0	...Repeated for Virtual Output 57					
C2F8	...Repeated for Virtual Output 58					
C300	...Repeated for Virtual Output 59					
C308	...Repeated for Virtual Output 60					
C310	...Repeated for Virtual Output 61					
C318	...Repeated for Virtual Output 62					
C320	...Repeated for Virtual Output 63					
C328	...Repeated for Virtual Output 64					
C330	...Repeated for Virtual Output 65					
C338	...Repeated for Virtual Output 66					
C340	...Repeated for Virtual Output 67					
C348	...Repeated for Virtual Output 68					
C350	...Repeated for Virtual Output 69					
C358	...Repeated for Virtual Output 70					
C360	...Repeated for Virtual Output 71					
C368	...Repeated for Virtual Output 72					
C370	...Repeated for Virtual Output 73					
C378	...Repeated for Virtual Output 74					
C380	...Repeated for Virtual Output 75					
C388	...Repeated for Virtual Output 76					
C390	...Repeated for Virtual Output 77					
C398	...Repeated for Virtual Output 78					
C3A0	...Repeated for Virtual Output 79					
C3A8	...Repeated for Virtual Output 80					
C3B0	...Repeated for Virtual Output 81					
C3B8	...Repeated for Virtual Output 82					
C3C0	...Repeated for Virtual Output 83					
C3C8	...Repeated for Virtual Output 84					
C3D0	...Repeated for Virtual Output 85					
C3D8	...Repeated for Virtual Output 86					
C3E0	...Repeated for Virtual Output 87					
C3E8	...Repeated for Virtual Output 88					
C3F0	...Repeated for Virtual Output 89					
C3F8	...Repeated for Virtual Output 90					
C400	...Repeated for Virtual Output 91					
C408	...Repeated for Virtual Output 92					
C410	...Repeated for Virtual Output 93					
C418	...Repeated for Virtual Output 94					
C420	...Repeated for Virtual Output 95					
C428	...Repeated for Virtual Output 96					
Mandatory (Read/Write Setting or Command)						
C430	Test Mode Function	0 to 2	---	1	F245	0 (Disabled)
C431	Force VFD and LED	0 to 1	---	1	F126	0 (No)
C432	Test Mode Initiate (Forcing)	0 to 4294967295	---	1	F300	1
Clear Commands (Read/Write)						
C434	Clear All Relay Records Command	0 to 1	---	1	F126	0 (No)

Table B–10: MODBUS MEMORY MAP (Sheet 61 of 72)

ADDR	REGISTER NAME	RANGE	UNITS	STEP	FORMAT	DEFAULT
Mandatory (Read Only)						
C435	DSP Advanced Diagnostics Active	0 to 1	--	1	F126	0 (No)
C436	Synchrophasor Feature Active	0 to 1	--	1	F126	0 (No)
Mandatory (Read/Write Command)						
C437	Relay Reboot Command	0 to 1	---	1	F126	0 (No)
C438	Save Volatile Data	0 to 1	---	1	F126	0 (No)
Clear Records (Read/Write Setting)						
C452	Clear User Fault Reports Operand	0 to 4294967295	---	1	F300	0
C454	Clear Event Records Operand	0 to 4294967295	---	1	F300	0
C456	Clear Oscillography Operand	0 to 4294967295	---	1	F300	0
C458	Clear Data Logger Operand	0 to 4294967295	---	1	F300	0
C468	Clear Energy Operand	0 to 4294967295	---	1	F300	0
C46C	Clear Unauthorized Access Operand	0 to 4294967295	---	1	F300	0
C470	Clear Platform Direct Input/Output Statistics Operand	0 to 4294967295	---	1	F300	0
C472	Reserved (13 items)	---	---	---	F001	0
Platform Direct Outputs (Read/Write Setting) (32 modules)						
C600	Direct Output 1 Operand	0 to 4294967295	---	1	F300	0
C602	Direct Output 1 Events	0 to 1	---	1	F102	0 (Disabled)
C603	...Repeated for Direct Output 2					
C606	...Repeated for Direct Output 3					
C609	...Repeated for Direct Output 4					
C60C	...Repeated for Direct Output 5					
C60F	...Repeated for Direct Output 6					
C612	...Repeated for Direct Output 7					
C615	...Repeated for Direct Output 8					
C618	...Repeated for Direct Output 9					
C61B	...Repeated for Direct Output 10					
C61E	...Repeated for Direct Output 11					
C621	...Repeated for Direct Output 12					
C624	...Repeated for Direct Output 13					
C627	...Repeated for Direct Output 14					
C62A	...Repeated for Direct Output 15					
C62D	...Repeated for Direct Output 16					
C630	...Repeated for Direct Output 17					
C633	...Repeated for Direct Output 18					
C636	...Repeated for Direct Output 19					
C639	...Repeated for Direct Output 20					
C63C	...Repeated for Direct Output 21					
C63F	...Repeated for Direct Output 22					
C642	...Repeated for Direct Output 23					
C645	...Repeated for Direct Output 24					
C648	...Repeated for Direct Output 25					
C64B	...Repeated for Direct Output 26					
C64E	...Repeated for Direct Output 27					
C651	...Repeated for Direct Output 28					
C654	...Repeated for Direct Output 29					
C657	...Repeated for Direct Output 30					
C65A	...Repeated for Direct Output 31					
C65D	...Repeated for Direct Output 32					
Reset (Read/Write Setting)						
C750	FlexLogic operand which initiates a reset	0 to 4294967295	---	1	F300	0
Control Pushbuttons (Read/Write Setting) (7 modules)						
C760	Control Pushbutton 1 Function	0 to 1	---	1	F102	0 (Disabled)
C761	Control Pushbutton 1 Events	0 to 1	---	1	F102	0 (Disabled)

Table B–10: MODBUS MEMORY MAP (Sheet 62 of 72)

ADDR	REGISTER NAME	RANGE	UNITS	STEP	FORMAT	DEFAULT
C762	...Repeated for Control Pushbutton 2					
C764	...Repeated for Control Pushbutton 3					
C766	...Repeated for Control Pushbutton 4					
C768	...Repeated for Control Pushbutton 5					
C76A	...Repeated for Control Pushbutton 6					
C76C	...Repeated for Control Pushbutton 7					
Force Contact Inputs/Outputs (Read/Write Settings)						
C7A0	Force Contact Input *x* State (96 items)	0 to 2	---	1	F144	0 (Disabled)
C800	Force Contact Output *x* State (64 items)	0 to 3	---	1	F131	0 (Disabled)
Direct Inputs/Outputs (Read/Write Setting)						
C880	Direct Device ID	1 to 16	---	1	F001	1
C881	Direct I/O Channel 1 Ring Configuration Function	0 to 1	---	1	F126	0 (No)
C882	Platform Direct I/O Data Rate	64 to 128	kbps	64	F001	64
C883	Direct I/O Channel 2 Ring Configuration Function	0 to 1	---	1	F126	0 (No)
C884	Platform Direct I/O Crossover Function	0 to 1	---	1	F102	0 (Disabled)
Direct Input/Output Commands (Read/Write Command)						
C888	Direct Input/Output Clear Counters Command	0 to 1	---	1	F126	0 (No)
Direct inputs (Read/Write Setting) (32 modules)						
C890	Direct Input 1 Device Number	0 to 16	---	1	F001	0
C891	Direct Input 1 Number	0 to 96	---	1	F001	0
C892	Direct Input 1 Default State	0 to 3	---	1	F086	0 (Off)
C893	Direct Input 1 Events	0 to 1	---	1	F102	0 (Disabled)
C894	...Repeated for Direct Input 2					
C898	...Repeated for Direct Input 3					
C89C	...Repeated for Direct Input 4					
C8A0	...Repeated for Direct Input 5					
C8A4	...Repeated for Direct Input 6					
C8A8	...Repeated for Direct Input 7					
C8AC	...Repeated for Direct Input 8					
C8B0	...Repeated for Direct Input 9					
C8B4	...Repeated for Direct Input 10					
C8B8	...Repeated for Direct Input 11					
C8BC	...Repeated for Direct Input 12					
C8C0	...Repeated for Direct Input 13					
C8C4	...Repeated for Direct Input 14					
C8C8	...Repeated for Direct Input 15					
C8CC	...Repeated for Direct Input 16					
C8D0	...Repeated for Direct Input 17					
C8D4	...Repeated for Direct Input 18					
C8D8	...Repeated for Direct Input 19					
C8DC	...Repeated for Direct Input 20					
C8E0	...Repeated for Direct Input 21					
C8E4	...Repeated for Direct Input 22					
C8E8	...Repeated for Direct Input 23					
C8EC	...Repeated for Direct Input 24					
C8F0	...Repeated for Direct Input 25					
C8F4	...Repeated for Direct Input 26					
C8F8	...Repeated for Direct Input 27					
C8FC	...Repeated for Direct Input 28					
C900	...Repeated for Direct Input 29					
C904	...Repeated for Direct Input 30					
C908	...Repeated for Direct Input 31					
C90C	...Repeated for Direct Input 32					

Table B–10: MODBUS MEMORY MAP (Sheet 63 of 72)

ADDR	REGISTER NAME	RANGE	UNITS	STEP	FORMAT	DEFAULT
Direct Input/Output Alarms (Read/Write Setting)						
CAD0	Direct Input/Output Channel 1 CRC Alarm Function	0 to 1	---	1	F102	0 (Disabled)
CAD1	Direct Input/Output Channel 1 CRC Alarm Message Count	100 to 10000	---	1	F001	600
CAD2	Direct Input/Output Channel 1 CRC Alarm Threshold	1 to 1000	---	1	F001	10
CAD3	Direct Input/Output Channel 1 CRC Alarm Events	0 to 1	---	1	F102	0 (Disabled)
CAD4	Reserved (4 items)	1 to 1000	---	1	F001	10
CAD8	Direct Input/Output Channel 2 CRC Alarm Function	0 to 1	---	1	F102	0 (Disabled)
CAD9	Direct Input/Output Channel 2 CRC Alarm Message Count	100 to 10000	---	1	F001	600
CADA	Direct Input/Output Channel 2 CRC Alarm Threshold	1 to 1000	---	1	F001	10
CADB	Direct Input/Output Channel 2 CRC Alarm Events	0 to 1	---	1	F102	0 (Disabled)
CADC	Reserved (4 items)	1 to 1000	---	1	F001	10
CAE0	Direct Input/Output Ch 1 Unreturned Messages Alarm Function	0 to 1	---	1	F102	0 (Disabled)
CAE1	Direct Input/Output Ch 1 Unreturned Messages Alarm Msg Count	100 to 10000	---	1	F001	600
CAE2	Direct Input/Output Ch 1 Unreturned Messages Alarm Threshold	1 to 1000	---	1	F001	10
CAE3	Direct Input/Output Ch 1 Unreturned Messages Alarm Events	0 to 1	---	1	F102	0 (Disabled)
CAE4	Reserved (4 items)	1 to 1000	---	1	F001	10
CAE8	Direct Input/Output Ch 2 Unreturned Messages Alarm Function	0 to 1	---	1	F102	0 (Disabled)
CAE9	Direct Input/Output Ch 2 Unreturned Messages Alarm Msg Count	100 to 10000	---	1	F001	600
CAEA	Direct Input/Output Ch 2 Unreturned Messages Alarm Threshold	1 to 1000	---	1	F001	10
CAEB	Direct Input/Output Channel 2 Unreturned Messages Alarm Events	0 to 1	---	1	F102	0 (Disabled)
CAEC	Reserved (4 items)	1 to 1000	---	1	F001	10
Remote Devices (Read/Write Setting) (16 modules)						
CB00	Remote Device 1 GSSE/GOOSE Application ID (GOID)	---	---	---	F209	“Remote Device 1“
CB21	Remote Device 1 GOOSE Ethernet APPID	0 to 16383	---	1	F001	0
CB22	Remote Device 1 GOOSE Dataset	0 to 16	---	1	F184	0 (Fixed)
CB23	Remote Device 1 in PMU Scheme	0 to 1	---	1	F126	0 (No)
CB24	Reserved	0 to 3	---	1	F626	0 (None)
CB25	...Repeated for Device 2					
CB4A	...Repeated for Device 3					
CB6F	...Repeated for Device 4					
CB94	...Repeated for Device 5					
CBB9	...Repeated for Device 6					
CBDE	...Repeated for Device 7					
CC03	...Repeated for Device 8					
CC28	...Repeated for Device 9					
CC4D	...Repeated for Device 10					
CC72	...Repeated for Device 11					
CC97	...Repeated for Device 12					
CCBC	...Repeated for Device 13					
CCE1	...Repeated for Device 14					
CD06	...Repeated for Device 15					
CD2B	...Repeated for Device 16					
Remote Inputs (Read/Write Setting) (32 modules)						
CFA0	Remote Input 1 Device	1 to 32	---	1	F001	1
CFA1	Remote Input 1 Bit Pair	0 to 96	---	1	F156	0 (None)
CFA2	Remote Input 1 Default State	0 to 3	---	1	F086	0 (Off)
CFA3	Remote Input 1 Events	0 to 1	---	1	F102	0 (Disabled)
CFA4	Remote Input 1 Name	1 to 64	---	1	F205	“Rem Ip 1”

Table B–10: MODBUS MEMORY MAP (Sheet 64 of 72)

ADDR	REGISTER NAME	RANGE	UNITS	STEP	FORMAT	DEFAULT
CFAA	...Repeated for Remote Input 2					
CFB4	...Repeated for Remote Input 3					
CFBE	...Repeated for Remote Input 4					
CFC8	...Repeated for Remote Input 5					
CFD2	...Repeated for Remote Input 6					
CFDC	...Repeated for Remote Input 7					
CFE6	...Repeated for Remote Input 8					
CFF0	...Repeated for Remote Input 9					
CFFA	...Repeated for Remote Input 10					
D004	...Repeated for Remote Input 11					
D00E	...Repeated for Remote Input 12					
D018	...Repeated for Remote Input 13					
D022	...Repeated for Remote Input 14					
D02C	...Repeated for Remote Input 15					
D036	...Repeated for Remote Input 16					
D040	...Repeated for Remote Input 17					
D04A	...Repeated for Remote Input 18					
D054	...Repeated for Remote Input 19					
D05E	...Repeated for Remote Input 20					
D068	...Repeated for Remote Input 21					
D072	...Repeated for Remote Input 22					
D07C	...Repeated for Remote Input 23					
D086	...Repeated for Remote Input 24					
D090	...Repeated for Remote Input 25					
D09A	...Repeated for Remote Input 26					
D0A4	...Repeated for Remote Input 27					
D0AE	...Repeated for Remote Input 28					
D0B8	...Repeated for Remote Input 29					
D0C2	...Repeated for Remote Input 30					
D0CC	...Repeated for Remote Input 31					
D0D6	...Repeated for Remote Input 32					
Remote Output DNA Pairs (Read/Write Setting) (32 modules)						
D220	Remote Output DNA 1 Operand	0 to 4294967295	---	1	F300	0
D222	Remote Output DNA 1 Events	0 to 1	---	1	F102	0 (Disabled)
D223	Reserved	0 to 1	---	1	F001	0
D224	...Repeated for Remote Output 2					
D228	...Repeated for Remote Output 3					
D22C	...Repeated for Remote Output 4					
D230	...Repeated for Remote Output 5					
D234	...Repeated for Remote Output 6					
D238	...Repeated for Remote Output 7					
D23C	...Repeated for Remote Output 8					
D240	...Repeated for Remote Output 9					
D244	...Repeated for Remote Output 10					
D248	...Repeated for Remote Output 11					
D24C	...Repeated for Remote Output 12					
D250	...Repeated for Remote Output 13					
D254	...Repeated for Remote Output 14					
D258	...Repeated for Remote Output 15					
D25C	...Repeated for Remote Output 16					
D260	...Repeated for Remote Output 17					
D264	...Repeated for Remote Output 18					
D268	...Repeated for Remote Output 19					
D26C	...Repeated for Remote Output 20					

Table B–10: MODBUS MEMORY MAP (Sheet 65 of 72)

ADDR	REGISTER NAME	RANGE	UNITS	STEP	FORMAT	DEFAULT
D270	...Repeated for Remote Output 21					
D274	...Repeated for Remote Output 22					
D278	...Repeated for Remote Output 23					
D27C	...Repeated for Remote Output 24					
D280	...Repeated for Remote Output 25					
D284	...Repeated for Remote Output 26					
D288	...Repeated for Remote Output 27					
D28C	...Repeated for Remote Output 28					
D290	...Repeated for Remote Output 29					
D294	...Repeated for Remote Output 30					
D298	...Repeated for Remote Output 31					
D29C	...Repeated for Remote Output 32					
Remote Output UserSt Pairs (Read/Write Setting) (32 modules)						
D2A0	Remote Output UserSt 1 Operand	0 to 4294967295	---	1	F300	0
D2A2	Remote Output UserSt 1 Events	0 to 1	---	1	F102	0 (Disabled)
D2A3	Reserved	0 to 1	---	1	F001	0
D2A4	...Repeated for Remote Output 2					
D2A8	...Repeated for Remote Output 3					
D2AC	...Repeated for Remote Output 4					
D2B0	...Repeated for Remote Output 5					
D2B4	...Repeated for Remote Output 6					
D2B8	...Repeated for Remote Output 7					
D2BC	...Repeated for Remote Output 8					
D2C0	...Repeated for Remote Output 9					
D2C4	...Repeated for Remote Output 10					
D2C8	...Repeated for Remote Output 11					
D2CC	...Repeated for Remote Output 12					
D2D0	...Repeated for Remote Output 13					
D2D4	...Repeated for Remote Output 14					
D2D8	...Repeated for Remote Output 15					
D2DC	...Repeated for Remote Output 16					
D2E0	...Repeated for Remote Output 17					
D2E4	...Repeated for Remote Output 18					
D2E8	...Repeated for Remote Output 19					
D2EC	...Repeated for Remote Output 20					
D2F0	...Repeated for Remote Output 21					
D2F4	...Repeated for Remote Output 22					
D2F8	...Repeated for Remote Output 23					
D2FC	...Repeated for Remote Output 24					
D300	...Repeated for Remote Output 25					
D304	...Repeated for Remote Output 26					
D308	...Repeated for Remote Output 27					
D30C	...Repeated for Remote Output 28					
D310	...Repeated for Remote Output 29					
D314	...Repeated for Remote Output 30					
D318	...Repeated for Remote Output 31					
D31C	...Repeated for Remote Output 32					
IEC 61850 GGIO2 Control Configuration (Read/Write Setting) (64 modules)						
D320	IEC 61850 GGIO2.CF.SPCSO1.ctlModel Value	0 to 2	---	1	F001	1
D321	IEC 61850 GGIO2.CF.SPCSO2.ctlModel Value	0 to 2	---	1	F001	1
D322	IEC 61850 GGIO2.CF.SPCSO3.ctlModel Value	0 to 2	---	1	F001	1
D323	IEC 61850 GGIO2.CF.SPCSO4.ctlModel Value	0 to 2	---	1	F001	1
D324	IEC 61850 GGIO2.CF.SPCSO5.ctlModel Value	0 to 2	---	1	F001	1
D325	IEC 61850 GGIO2.CF.SPCSO6.ctlModel Value	0 to 2	---	1	F001	1

Table B–10: MODBUS MEMORY MAP (Sheet 66 of 72)

ADDR	REGISTER NAME	RANGE	UNITS	STEP	FORMAT	DEFAULT
D326	IEC 61850 GGIO2.CF.SPCSO7.ctlModel Value	0 to 2	---	1	F001	1
D327	IEC 61850 GGIO2.CF.SPCSO8.ctlModel Value	0 to 2	---	1	F001	1
D328	IEC 61850 GGIO2.CF.SPCSO9.ctlModel Value	0 to 2	---	1	F001	1
D329	IEC 61850 GGIO2.CF.SPCSO10.ctlModel Value	0 to 2	---	1	F001	1
D32A	IEC 61850 GGIO2.CF.SPCSO11.ctlModel Value	0 to 2	---	1	F001	1
D32B	IEC 61850 GGIO2.CF.SPCSO12.ctlModel Value	0 to 2	---	1	F001	1
D32C	IEC 61850 GGIO2.CF.SPCSO13.ctlModel Value	0 to 2	---	1	F001	1
D32D	IEC 61850 GGIO2.CF.SPCSO14.ctlModel Value	0 to 2	---	1	F001	1
D32E	IEC 61850 GGIO2.CF.SPCSO15.ctlModel Value	0 to 2	---	1	F001	1
D32F	IEC 61850 GGIO2.CF.SPCSO16.ctlModel Value	0 to 2	---	1	F001	1
D330	IEC 61850 GGIO2.CF.SPCSO17.ctlModel Value	0 to 2	---	1	F001	1
D331	IEC 61850 GGIO2.CF.SPCSO18.ctlModel Value	0 to 2	---	1	F001	1
D332	IEC 61850 GGIO2.CF.SPCSO19.ctlModel Value	0 to 2	---	1	F001	1
D333	IEC 61850 GGIO2.CF.SPCSO20.ctlModel Value	0 to 2	---	1	F001	1
D334	IEC 61850 GGIO2.CF.SPCSO21.ctlModel Value	0 to 2	---	1	F001	1
D335	IEC 61850 GGIO2.CF.SPCSO22.ctlModel Value	0 to 2	---	1	F001	1
D336	IEC 61850 GGIO2.CF.SPCSO23.ctlModel Value	0 to 2	---	1	F001	1
D337	IEC 61850 GGIO2.CF.SPCSO24.ctlModel Value	0 to 2	---	1	F001	1
D338	IEC 61850 GGIO2.CF.SPCSO25.ctlModel Value	0 to 2	---	1	F001	1
D339	IEC 61850 GGIO2.CF.SPCSO26.ctlModel Value	0 to 2	---	1	F001	1
D33A	IEC 61850 GGIO2.CF.SPCSO27.ctlModel Value	0 to 2	---	1	F001	1
D33B	IEC 61850 GGIO2.CF.SPCSO28.ctlModel Value	0 to 2	---	1	F001	1
D33C	IEC 61850 GGIO2.CF.SPCSO29.ctlModel Value	0 to 2	---	1	F001	1
D33D	IEC 61850 GGIO2.CF.SPCSO30.ctlModel Value	0 to 2	---	1	F001	1
D33E	IEC 61850 GGIO2.CF.SPCSO31.ctlModel Value	0 to 2	---	1	F001	1
D33F	IEC 61850 GGIO2.CF.SPCSO32.ctlModel Value	0 to 2	---	1	F001	1
D340	IEC 61850 GGIO2.CF.SPCSO33.ctlModel Value	0 to 2	---	1	F001	1
D341	IEC 61850 GGIO2.CF.SPCSO34.ctlModel Value	0 to 2	---	1	F001	1
D342	IEC 61850 GGIO2.CF.SPCSO35.ctlModel Value	0 to 2	---	1	F001	1
D343	IEC 61850 GGIO2.CF.SPCSO36.ctlModel Value	0 to 2	---	1	F001	1
D344	IEC 61850 GGIO2.CF.SPCSO37.ctlModel Value	0 to 2	---	1	F001	1
D345	IEC 61850 GGIO2.CF.SPCSO38.ctlModel Value	0 to 2	---	1	F001	1
D346	IEC 61850 GGIO2.CF.SPCSO39.ctlModel Value	0 to 2	---	1	F001	1
D347	IEC 61850 GGIO2.CF.SPCSO40.ctlModel Value	0 to 2	---	1	F001	1
D348	IEC 61850 GGIO2.CF.SPCSO41.ctlModel Value	0 to 2	---	1	F001	1
D349	IEC 61850 GGIO2.CF.SPCSO42.ctlModel Value	0 to 2	---	1	F001	1
D34A	IEC 61850 GGIO2.CF.SPCSO43.ctlModel Value	0 to 2	---	1	F001	1
D34B	IEC 61850 GGIO2.CF.SPCSO44.ctlModel Value	0 to 2	---	1	F001	1
D34C	IEC 61850 GGIO2.CF.SPCSO45.ctlModel Value	0 to 2	---	1	F001	1
D34D	IEC 61850 GGIO2.CF.SPCSO46.ctlModel Value	0 to 2	---	1	F001	1
D34E	IEC 61850 GGIO2.CF.SPCSO47.ctlModel Value	0 to 2	---	1	F001	1
D34F	IEC 61850 GGIO2.CF.SPCSO48.ctlModel Value	0 to 2	---	1	F001	1
D350	IEC 61850 GGIO2.CF.SPCSO49.ctlModel Value	0 to 2	---	1	F001	1
D351	IEC 61850 GGIO2.CF.SPCSO50.ctlModel Value	0 to 2	---	1	F001	1
D352	IEC 61850 GGIO2.CF.SPCSO51.ctlModel Value	0 to 2	---	1	F001	1
D353	IEC 61850 GGIO2.CF.SPCSO52.ctlModel Value	0 to 2	---	1	F001	1
D354	IEC 61850 GGIO2.CF.SPCSO53.ctlModel Value	0 to 2	---	1	F001	1
D355	IEC 61850 GGIO2.CF.SPCSO54.ctlModel Value	0 to 2	---	1	F001	1
D356	IEC 61850 GGIO2.CF.SPCSO55.ctlModel Value	0 to 2	---	1	F001	1
D357	IEC 61850 GGIO2.CF.SPCSO56.ctlModel Value	0 to 2	---	1	F001	1
D358	IEC 61850 GGIO2.CF.SPCSO57.ctlModel Value	0 to 2	---	1	F001	1
D359	IEC 61850 GGIO2.CF.SPCSO58.ctlModel Value	0 to 2	---	1	F001	1
D35A	IEC 61850 GGIO2.CF.SPCSO59.ctlModel Value	0 to 2	---	1	F001	1
D35B	IEC 61850 GGIO2.CF.SPCSO60.ctlModel Value	0 to 2	---	1	F001	1

Table B–10: MODBUS MEMORY MAP (Sheet 67 of 72)

ADDR	REGISTER NAME	RANGE	UNITS	STEP	FORMAT	DEFAULT
D35C	IEC 61850 GGIO2.CF.SPCSO61.ctlModel Value	0 to 2	---	1	F001	1
D35D	IEC 61850 GGIO2.CF.SPCSO62.ctlModel Value	0 to 2	---	1	F001	1
D35E	IEC 61850 GGIO2.CF.SPCSO63.ctlModel Value	0 to 2	---	1	F001	1
D35F	IEC 61850 GGIO2.CF.SPCSO64.ctlModel Value	0 to 2	---	1	F001	1
Remote Device Status (Read Only) (16 modules)						
D360	Remote Device 1 StNum	0 to 4294967295	---	1	F003	0
D362	Remote Device 1 SqNum	0 to 4294967295	---	1	F003	0
D364	...Repeated for Remote Device 2					
D368	...Repeated for Remote Device 3					
D36C	...Repeated for Remote Device 4					
D370	...Repeated for Remote Device 5					
D374	...Repeated for Remote Device 6					
D378	...Repeated for Remote Device 7					
D37C	...Repeated for Remote Device 8					
D380	...Repeated for Remote Device 9					
D384	...Repeated for Remote Device 10					
D388	...Repeated for Remote Device 11					
D38C	...Repeated for Remote Device 12					
D390	...Repeated for Remote Device 13					
D394	...Repeated for Remote Device 14					
D398	...Repeated for Remote Device 15					
D39C	...Repeated for Remote Device 16					
Contact Outputs (Read/Write Setting) (64 modules)						
D3E0	Contact Output 1 Name	---	---	---	F205	“Cont Op 1"
D3E6	Contact Output 1 Operation	0 to 4294967295	---	1	F300	0
D3E8	Contact Output 1 Seal In	0 to 4294967295	---	1	F300	0
D3EA	Latching Output 1 Reset	0 to 4294967295	---	1	F300	0
D3EC	Contact Output 1 Events	0 to 1	---	1	F102	1 (Enabled)
D3ED	Latching Output 1 Type	0 to 1	---	1	F090	0 (Operate-dominant)
D3EE	Reserved	---	---	---	F001	0
D3EF	...Repeated for Contact Output 2					
D3FE	...Repeated for Contact Output 3					
D40D	...Repeated for Contact Output 4					
D41C	...Repeated for Contact Output 5					
D42B	...Repeated for Contact Output 6					
D43A	...Repeated for Contact Output 7					
D449	...Repeated for Contact Output 8					
D458	...Repeated for Contact Output 9					
D467	...Repeated for Contact Output 10					
D476	...Repeated for Contact Output 11					
D485	...Repeated for Contact Output 12					
D494	...Repeated for Contact Output 13					
D4A3	...Repeated for Contact Output 14					
D4B2	...Repeated for Contact Output 15					
D4C1	...Repeated for Contact Output 16					
D4D0	...Repeated for Contact Output 17					
D4DF	...Repeated for Contact Output 18					
D4EE	...Repeated for Contact Output 19					
D4FD	...Repeated for Contact Output 20					
D50C	...Repeated for Contact Output 21					
D51B	...Repeated for Contact Output 22					
D52A	...Repeated for Contact Output 23					
D539	...Repeated for Contact Output 24					

Table B–10: MODBUS MEMORY MAP (Sheet 68 of 72)

ADDR	REGISTER NAME	RANGE	UNITS	STEP	FORMAT	DEFAULT
D548	...Repeated for Contact Output 25					
D557	...Repeated for Contact Output 26					
D566	...Repeated for Contact Output 27					
D575	...Repeated for Contact Output 28					
D584	...Repeated for Contact Output 29					
D593	...Repeated for Contact Output 30					
D5A2	...Repeated for Contact Output 31					
D5B1	...Repeated for Contact Output 32					
D5C0	...Repeated for Contact Output 33					
D5CF	...Repeated for Contact Output 34					
D5DE	...Repeated for Contact Output 35					
D5ED	...Repeated for Contact Output 36					
D5FC	...Repeated for Contact Output 37					
D60B	...Repeated for Contact Output 38					
D61A	...Repeated for Contact Output 39					
D629	...Repeated for Contact Output 40					
D638	...Repeated for Contact Output 41					
D647	...Repeated for Contact Output 42					
D656	...Repeated for Contact Output 43					
D665	...Repeated for Contact Output 44					
D674	...Repeated for Contact Output 45					
D683	...Repeated for Contact Output 46					
D692	...Repeated for Contact Output 47					
D6A1	...Repeated for Contact Output 48					
D6B0	...Repeated for Contact Output 49					
D6BF	...Repeated for Contact Output 50					
D6CE	...Repeated for Contact Output 51					
D6DD	...Repeated for Contact Output 52					
D6EC	...Repeated for Contact Output 53					
D6FB	...Repeated for Contact Output 54					
D70A	...Repeated for Contact Output 55					
D719	...Repeated for Contact Output 56					
D728	...Repeated for Contact Output 57					
D737	...Repeated for Contact Output 58					
D746	...Repeated for Contact Output 59					
D755	...Repeated for Contact Output 60					
D764	...Repeated for Contact Output 61					
D773	...Repeated for Contact Output 62					
D782	...Repeated for Contact Output 63					
D791	...Repeated for Contact Output 64					
DCmA Inputs (Read/Write Setting) (24 modules)						
D7A0	DCmA Inputs 1 Function	0 to 1	---	1	F102	0 (Disabled)
D7A1	DCmA Inputs 1 ID	---	---	---	F205	“DCMA Ip 1"
D7A7	Reserved 1 (4 items)	0 to 65535	---	1	F001	0
D7AB	DCmA Inputs 1 Units	---	---	---	F206	“mA”
D7AE	DCmA Inputs 1 Range	0 to 6	---	1	F173	6 (4 to 20 mA)
D7AF	DCmA Inputs 1 Minimum Value	-9999.999 to 9999.999	---	0.001	F004	4000
D7B1	DCmA Inputs 1 Maximum Value	-9999.999 to 9999.999	---	0.001	F004	20000
D7B3	...Repeated for DCmA Inputs 2					
D7C6	...Repeated for DCmA Inputs 3					
D7D9	...Repeated for DCmA Inputs 4					
D7EC	...Repeated for DCmA Inputs 5					
D7FF	...Repeated for DCmA Inputs 6					
D812	...Repeated for DCmA Inputs 7					

Table B–10: MODBUS MEMORY MAP (Sheet 69 of 72)

ADDR	REGISTER NAME	RANGE	UNITS	STEP	FORMAT	DEFAULT
D825	...Repeated for DCmA Inputs 8					
D838	...Repeated for DCmA Inputs 9					
D84B	...Repeated for DCmA Inputs 10					
D85E	...Repeated for DCmA Inputs 11					
D871	...Repeated for DCmA Inputs 12					
D884	...Repeated for DCmA Inputs 13					
D897	...Repeated for DCmA Inputs 14					
D8AA	...Repeated for DCmA Inputs 15					
D8BD	...Repeated for DCmA Inputs 16					
D8D0	...Repeated for DCmA Inputs 17					
D8E3	...Repeated for DCmA Inputs 18					
D8F6	...Repeated for DCmA Inputs 19					
D909	...Repeated for DCmA Inputs 20					
D91C	...Repeated for DCmA Inputs 21					
D92F	...Repeated for DCmA Inputs 22					
D942	...Repeated for DCmA Inputs 23					
D955	...Repeated for DCmA Inputs 24					
DNP/IEC Points (Read/Write Setting)						
D968	DNP/IEC 60870-5-104 Binary Input Points (256 items)	0 to 4294967295	---	1	F300	0
DB68	DNP/IEC 60870-5-104 Analog Input Points (256 items)	0 to 65535	---	1	F600	0
Synchrocheck (Read/Write Setting) (4 modules)						
DC70	Synchrocheck 1 Function	0 to 1	---	1	F102	0 (Disabled)
DC71	Synchrocheck 1 V1 Source	0 to 5	---	1	F167	0 (SRC 1)
DC72	Synchrocheck 1 V2 Source	0 to 5	---	1	F167	1 (SRC 2)
DC73	Synchrocheck 1 Maximum Voltage Difference	0 to 400000	V	1	F060	10000
DC75	Synchrocheck 1 Maximum Angle Difference	0 to 100	degrees	1	F001	30
DC76	Synchrocheck 1 Maximum Frequency Difference	0 to 2	Hz	0.01	F001	100
DC77	Synchrocheck 1 Dead Source Select	0 to 5	---	1	F176	1 (LV1 and DV2)
DC78	Synchrocheck 1 Dead V1 Maximum Voltage	0 to 1.25	pu	0.01	F001	30
DC79	Synchrocheck 1 Dead V2 Maximum Voltage	0 to 1.25	pu	0.01	F001	30
DC7A	Synchrocheck 1 Live V1 Minimum Voltage	0 to 1.25	pu	0.01	F001	70
DC7B	Synchrocheck 1 Live V2 Minimum Voltage	0 to 1.25	pu	0.01	F001	70
DC7C	Synchrocheck 1 Target	0 to 2	---	1	F109	0 (Self-reset)
DC7D	Synchrocheck 1 Events	0 to 1	---	1	F102	0 (Disabled)
DC7E	Synchrocheck 1 Block	0 to 4294967295	---	1	F300	0
DC80	Synchrocheck 1 Frequency Hysteresis	0 to 0.1	Hz	0.01	F001	6
DC81	...Repeated for Synchrocheck 2					
DC92	...Repeated for Synchrocheck 3					
DCA3	...Repeated for Synchrocheck 4					
Phasor Measurement Unit Basic Configuration (Read/Write Setting)						
DCB4	PMU 1 Function	0 to 1	---	1	F102	0 (Disabled)
DCB5	PMU 1 LDInst	---	---	---	F214	"PMUx"
DCD6	PMU 1 IDCode	1 to 65534	---	1	F001	1
DCD7	PMU 1 STN	---	---	---	F203	"GE-UR-PMU"
DCDF	PMU 1 Source	0 to 5	---	1	F167	0 (SRC 1)
DCE0	PMU 1 Class	0 to 2	---	1	F549	1 (M-CLASS)
DCE1	PMU 1 Format	0 to 1	---	1	F547	0 (Integer)
DCE2	PMU 1 Style	0 to 1	---	1	F546	0 (Polar)
DCE3	PMU 1 Rate	0 to 13	---	1	F544	4 (10/sec)
DCE4	PMU 1 PHS-x (14 items)	0 to 14	---	1	F543	1 (Va)
DCF2	PMU 1 PHS-x Name (14 items)	---	---	---	F203	"GE-UR-PMU-PHS 1 "
DD62	PMU 1 A-CH-x (16 items)	0 to 65535	---	1	F600	0
DD72	PMU 1 A-CH-x (16 items)	---	---	---	F203	"AnalogChannel 1 "

Table B–10: MODBUS MEMORY MAP (Sheet 70 of 72)

ADDR	REGISTER NAME	RANGE	UNITS	STEP	FORMAT	DEFAULT
DDF2	PMU 1 D-CH-x (16 items)	0 to 4294967295	---	1	F300	0
DE12	PMU 1 D-CH-x Name (16 items)	---	---	---	F203	"Dig Channel 1 "
DE92	PMU 1 D-CH-x Normal State (16 items)	0 to 1	---	1	F108	0 (Off)
DEA2	Reserved (16 items)	0 to 1	---	1	F001	0
Phasor Measurement Unit Aggregator (Read/Write Setting)						
E8A8	PMU Aggregator 1 Name	---	---	1	F209	"MSVID 1 "
E8C9	Aggregator 1 IDcode	1 to 65534	---	1	F001	1
E8CA	Aggregator 1 Protocol	0 to 2	---	1	F548	0 (NONE)
E8CB	Aggregator 1 TCP Port	0 to 65534	---	1	F001	4712
E8CC	Aggregator 1 UDP Port	0 to 65534	---	1	F001	4713
E8CD	PMU Aggregator 1 90-5 UDP Port	0 to 65534	---	1	F001	102
E8CE	PMU Aggregator 1 PDC Network Control	0 to 1	---	1	F102	0 (Disabled)
E8CF	Aggregator 1 Include PMU1	0 to 1	---	1	F126	0 (No)
E8D0	Aggregator 1 Include PMU2	0 to 1	---	1	F126	0 (No)
E8D1	Aggregator 1 Include PMU3	0 to 1	---	1	F126	0 (No)
E8D2	Aggregator 1 Include PMU4	0 to 1	---	1	F126	0 (No)
E8D3	Aggregator 1 Include PMU5	0 to 1	---	1	F126	0 (No)
E8D4	Aggregator 1 Include PMU6	0 to 1	---	1	F126	0 (No)
E8D5	PMU Aggregator 1 ASDUS	1 to 4	---	1	F001	1
E8D6	PMU Aggregator 1 Port	1 to 3	---	1	F001	1
E8D7	Reserved (3 items)	0 to 1	---	1	F001	0
Phasor Measurement Unit Aggregator Control Block (Read/Write Setting)						
E9C8	PMU Aggregator 1 Control Block SvEna	0 to 4294967295	---	1	F300	0
E9CA	PMU Aggregator 1 Control Block Client Control	0 to 4294967295	---	1	F300	0
E9CC	PMU Aggregator 1 CB SvEna Default	0 to 4294967295	---	1	F300	0
E9CE	PMU Aggregator 1 Control Block ConfRev	1 to 4294967295	---	1	F003	1
E9D0	PMU Aggregator 1 Control Block Priority	0 to 7	---	1	F001	4
E9D1	PMU Aggregator 1 Control Block IPClass	0 to 1	---	1	F563	1 (Expedited Forwarding)
E9D2	PMU Aggregator 1 Control Block VID	0 to 4095	---	1	F001	0
E9D3	PMU Aggregator 1 Control Block APPID	0 to 16383	---	1	F001	0
E9D4	PMU Aggregator 1 Control Block IP Address	0 to 4294967295	---	1	F003	0
E9D6	PMU Aggregator 1 Control Block Security	0 to 2	---	1	F001	0
Phasor Measurement Unit Recording Command (Read/Write Command)						
EA22	PMU 1 Recording Clear Command	0 to 1	---	1	F126	0 (No)
EA23	PMU 1 Recording Force Trigger	0 to 1	---	1	F126	0 (No)
Phasor Measurement Unit Recording (Read/Write Setting)						
EA2E	PMU 1 Record Function	0 to 1	---	1	F102	0 (Disabled)
EA2F	PMU 1 No of Timed Records	2 to 128	---	1	F001	10
EA30	PMU 1 Trigger Mode	0 to 1	---	1	F542	0 (Auto Overwrite)
EA31	.PMU 1 Timed Trigger Position	1 to 50	%	1	F001	10
Phasor Measurement Unit Recording Ex (Read/Write Setting)						
Phasor Measurement Unit Triggering (Read/Write Setting)						
EA4A	PMU 1 User Trigger	0 to 4294967295	---	1	F300	0
Phasor Measurement Unit Voltage Trigger (Read/Write Setting)						
EA56	PMU 1 Volt Trigger Function	0 to 1	---	1	F102	0 (Disabled)
EA57	PMU 1 Voltage Trigger Low Volt	0.25 to 1.25	pu	0.001	F001	800
EA58	PMU 1 Voltage Trigger High Volt	0.75 to 1.75	pu	0.001	F001	1200
EA59	PMU 1 Voltage Trigger Pkp Time	0 to 600	s	0.01	F001	10
EA5A	PMU 1 Voltage Trigger Dpo Time	0 to 600	s	0.01	F001	100
EA5B	PMU 1 Voltage Trigger Block (3 items)	0 to 4294967295	---	1	F300	0
EA61	PMU 1 Voltage Trigger Target	0 to 2	---	1	F109	0 (Self-reset)
EA62	PMU 1 Voltage Trigger Events	0 to 1	---	1	F102	0 (Disabled)

Table B–10: MODBUS MEMORY MAP (Sheet 71 of 72)

ADDR	REGISTER NAME	RANGE	UNITS	STEP	FORMAT	DEFAULT
Phasor Measurement Unit Current Trigger (Read/Write Setting						
EAA4	PMU 1 Current Trigger Function	0 to 1	---	1	F102	0 (Disabled)
EAA5	PMU 1 Current Trigger Pickup	0.1 to 30	pu	0.001	F001	1800
EAA6	PMU 1 Current Trigger Pkp Time	0 to 600	s	0.01	F001	10
EAA7	PMU 1 Current Trigger Dpo Time	0 to 600	s	0.01	F001	100
EAA8	PMU 1 Current Trigger Block (3 items)	0 to 4294967295	---	1	F300	0
EAAE	PMU 1 Current Trigger Target	0 to 2	---	1	F109	0 (Self-reset)
EAAF	PMU 1 Current Trigger Events	0 to 1	---	1	F102	0 (Disabled)
Phasor Measurement Unit Frequency Trigger (Read/Write Setting)						
EAEC	PMU 1 Frequency Trigger Function	0 to 1	---	1	F102	0 (Disabled)
EAED	PMU 1 Frequency Trigger Low Frequency	20 to 70	Hz	0.01	F001	4900
EAEE	PMU 1 Frequency Trigger High Frequency	20 to 70	Hz	0.01	F001	6100
EAEF	PMU 1 Frequency Trigger Pickup Time	0 to 600	s	0.01	F001	10
EAF0	PMU 1 Frequency Trigger Dropout Time	0 to 600	s	0.01	F001	100
EAF1	PMU 1 Frequency Trigger Block (3 items)	0 to 4294967295	---	1	F300	0
EAF7	PMU 1 Frequency Trigger Target	0 to 2	---	1	F109	0 (Self-reset)
EAF8	PMU 1 Frequency Trigger Events	0 to 1	---	1	F102	0 (Disabled)
Phasor Measurement Unit df/dt Trigger (Read/Write Setting)						
EB3A	PMU 1 df/dt Trigger Function	0 to 1	---	1	F102	0 (Disabled)
EB3B	PMU 1 df/dt Trigger Raise	0.1 to 15	Hz/s	0.01	F001	25
EB3C	PMU 1 df/dt Trigger Fall	0.1 to 15	Hz/s	0.01	F001	25
EB3D	PMU 1 df/dt Trigger Pkp Time	0 to 600	s	0.01	F001	10
EB3E	PMU 1 df/dt Trigger Dpo Time	0 to 600	s	0.01	F001	100
EB3F	PMU 1 df/dt Trigger Block (3 items)	0 to 4294967295	---	1	F300	0
EB45	PMU 1 df/dt Trigger Target	0 to 2	---	1	F109	0 (Self-reset)
EB46	PMU 1 df/dt Trigger Events	0 to 1	---	1	F102	0 (Disabled)
Phasor Measurement Unit Power Trigger (Read/Write Setting)						
EB88	PMU 1 Power Trigger Function	0 to 1	---	1	F102	0 (Disabled)
EB89	PMU 1 Power Trigger Active	0.25 to 3	pu	0.001	F001	1250
EB8A	PMU 1 Power Trigger Reactive	0.25 to 3	pu	0.001	F001	1250
EB8B	PMU 1 Power Trigger Apparent	0.25 to 3	pu	0.001	F001	1250
EB8C	PMU 1 Power Trigger Pkp Time	0 to 600	s	0.01	F001	10
EB8D	PMU 1 Power Trigger Dpo Time	0 to 600	s	0.01	F001	100
EB8E	PMU 1 Power Trigger Block (3 items)	0 to 4294967295	---	1	F300	0
EB94	PMU 1 Power Trigger Target	0 to 2	---	1	F109	0 (Self-reset)
EB95	PMU 1 Power Trigger Events	0 to 1	---	1	F102	0 (Disabled)
Phasor Measurement Unit Calibration (Read/Write Setting)						
EBDC	PMU 1 Va Calibration Angle	-5 to 5	°	0.05	F002	0
EBDD	PMU 1 Va Calibration Magnitude	95 to 105	%	0.1	F002	1000
EBDE	PMU 1 Vb Calibration Angle	-5 to 5	°	0.05	F002	0
EBDF	PMU 1 Vb Calibration Magnitude	95 to 105	%	0.1	F002	1000
EBE0	PMU 1 Vc Calibration Angle	-5 to 5	°	0.05	F002	0
EBE1	PMU 1 Vc Calibration Magnitude	95 to 105	%	0.1	F002	1000
EBE2	PMU 1 Vx Calibration Angle	-5 to 5	°	0.05	F002	0
EBE3	PMU 1 Vx Calibration Magnitude	95 to 105	%	0.1	F002	1000
EBE4	PMU 1 Ia Calibration Angle	-5 to 5	°	0.05	F002	0
EBE5	PMU 1 Ia Calibration Magnitude	95 to 105	%	0.1	F002	1000
EBE6	PMU 1 Ib Calibration Angle	-5 to 5	°	0.05	F002	0
EBE7	PMU 1 Ib Calibration Magnitude	95 to 105	%	0.1	F002	1000
EBE8	PMU 1 Ic Calibration Angle	-5 to 5	°	0.05	F002	0
EBE9	PMU 1 Ic Calibration Magnitude	95 to 105	%	0.1	F002	1000
EBEA	PMU 1 Ig Calibration Angle	-5 to 5	°	0.05	F002	0
EBEB	PMU 1 Ig Calibration Magnitude	95 to 105	%	0.1	F002	1000
EBEC	PMU 1 Sequence Voltage Shift Angle	-180 to 180	°	30	F002	0

Table B–10: MODBUS MEMORY MAP (Sheet 72 of 72)

ADDR	REGISTER NAME	RANGE	UNITS	STEP	FORMAT	DEFAULT
EBED	PMU 1 Sequence Current Shift Angle	-180 to 180	°	30	F002	0
Phasor Measurement Unit Network Reporting Configuration (Read/Write Setting)						
EC48	PMU Network Reporting Function	0 to 1	---	1	F102	0 (Disabled)
EC49	PMU Network Reporting ID Code	1 to 65534	---	1	F001	1
EC4A	PMU TCP Port Number	1 to 65535	---	1	F001	4712
EC4B	PMU UDP Port Number 1	1 to 65535	---	1	F001	4713
EC4C	PMU UDP Port Number 2	1 to 65535	---	1	F001	4714
Settings File Template (Read/Write Setting)						
ED00	FlexLogic Displays Active	0 to 1	---	1	F102	1 (Enabled)
ED01	Template Access	---	---	---	F205	(none)
Setting File Template (Read Only Non-Volatile)						
ED07	Last Settings Change Date	0 to 4294967295	---	1	F050	0
Settings File Template (Read/Write Setting)						
ED09	Template Bitmask (750 items)	0 to 65535	---	1	F001	0
Phasor Measurement Unit Records (Read Only)						
EFFF	PMU Recording Number of Triggers	0 to 65535	---	1	F001	0

F001
UR_UINT16 UNSIGNED 16 BIT INTEGER

F002
UR_SINT16 SIGNED 16 BIT INTEGER

F003
UR_UINT32 UNSIGNED 32 BIT INTEGER (2 registers)

High order word is stored in the first register.
Low order word is stored in the second register.

F004
UR_SINT32 SIGNED 32 BIT INTEGER (2 registers)

High order word is stored in the first register.
Low order word is stored in the second register.

F011
UR_UINT16 FLEXCURVE DATA (120 points)

A FlexCurve is an array of 120 consecutive data points (x, y) that are interpolated to generate a smooth curve. The y-axis is the user-defined trip or operation time setting; the x-axis is the pickup ratio and is pre-defined. See format F119 for a listing of the pickup ratios; the enumeration value for the pickup ratio indicates the offset into the FlexCurve base address where the corresponding time value is stored.

F013
POWER_FACTOR (SIGNED 16 BIT INTEGER)

Positive values indicate lagging power factor; negative values indicate leading.

F050
UR_UINT32 TIME and DATE (UNSIGNED 32 BIT INTEGER)

Gives the current time in seconds elapsed since 00:00:00 January 1, 1970.

F051
UR_UINT32 DATE in SR format (alternate format for F050)

First 16 bits are Month/Day (MM/DD/xxxx).
Month: 1=January, 2=February,...,12=December.
Day: 1 to 31 in steps of 1.
Last 16 bits are Year (xx/xx/YYYY): 1970 to 2106 in steps of 1.

F052
UR_UINT32 TIME in SR format (alternate format for F050)

First 16 bits are Hours/Minutes (HH:MM:xx.xxx).
Hours: 0=12am, 1=1am,...,12=12pm,...23=11pm.
Minutes: 0 to 59 in steps of 1.
Last 16 bits are Seconds (xx:xx:.SS.SSS): (0=00.000s, 1=00.001,...,59999=59.999s).

F060
FLOATING_POINT IEEE FLOATING POINT (32 bits)

F072
HEX6 6 BYTES - 12 ASCII DIGITS

F073
HEX8 8 BYTES - 16 ASCII DIGITS

F074
HEX20 20 BYTES - 40 ASCII DIGITS

F083
ENUMERATION: SELECTOR MODES

0 = Time-Out, 1 = Acknowledge

F084
ENUMERATION: SELECTOR POWER UP

0 = Restore, 1 = Synchronize, 2 = Sync/Restore

F085
ENUMERATION: POWER SWING SHAPE

0 = Mho Shape, 1 = Quad Shape

F086
ENUMERATION: CONTACT INPUT DEFAULT STATE

0 = Off, 1 = On, 2= Latest/Off, 3 = Latest/On

F090
ENUMERATION: LATCHING OUTPUT TYPE

0 = Operate-dominant, 1 = Reset-dominant

F100
ENUMERATION: VT CONNECTION TYPE

0 = Wye, 1 = Delta

F101
ENUMERATION: MESSAGE DISPLAY INTENSITY

0 = 25%, 1 = 50%, 2 = 75%, 3 = 100%

B

F102
ENUMERATION: DISABLED/ENABLED

0 = Disabled, 1 = Enabled

F103
ENUMERATION: CURVE SHAPES

Bitmask	Curve shape
0	IEEE Mod Inv
1	IEEE Very Inv
2	IEEE Ext Inv
3	IEC Curve A
4	IEC Curve B
5	IEC Curve C
6	IEC Short Inv
7	IAC Ext Inv
8	IAC Very Inv

Bitmask	Curve shape
9	IAC Inverse
10	IAC Short Inv
11	I2t
12	Definite Time
13	FlexCurve A
14	FlexCurve B
15	FlexCurve C
16	FlexCurve D

F104
ENUMERATION: RESET TYPE

0 = Instantaneous, 1 = Timed

F106
ENUMERATION: PHASE ROTATION

0 = ABC, 1 = ACB

F108
ENUMERATION: OFF/ON

0 = Off, 1 = On

F109
ENUMERATION: CONTACT OUTPUT OPERATION

0 = Self-reset, 1 = Latched, 2 = Disabled

F111
ENUMERATION: UNDERVOLTAGE CURVE SHAPES

0 = Definite Time, 1 = Inverse Time

F112
ENUMERATION: RS485 BAUD RATES

Bitmask	Value
0	300
1	1200
2	2400
3	4800

Bitmask	Value
4	9600
5	19200
6	38400
7	57600

Bitmask	Value
8	115200
9	14400
10	28800
11	33600

F113
ENUMERATION: PARITY

0 = None, 1 = Odd, 2 = Even

F114
ENUMERATION: IRIG-B SIGNAL TYPE

0 = None, 1 = DC Shift, 2 = Amplitude Modulated

F116
ENUMERATION: NEUTRAL OVERVOLTAGE CURVES

0 = Definite Time, 1 = FlexCurve A, 2 = FlexCurve B,
3 = FlexCurve C

F118
ENUMERATION: OSCILLOGRAPHY MODE

0 = Automatic Overwrite, 1 = Protected

F120
ENUMERATION: DISTANCE SHAPE

0 = Mho, 1 = Quad

Fixed at Mho in G60.

F122
ENUMERATION: ELEMENT INPUT SIGNAL TYPE

0 = Phasor, 1 = RMS

F123
ENUMERATION: CT SECONDARY

0 = 1 A, 1 = 5 A

F124
ENUMERATION: LIST OF ELEMENTS

Bitmask	Element
0	Phase Instantaneous Overcurrent 1
1	Phase Instantaneous Overcurrent 2
16	Phase Time Overcurrent 1
24	Phase Directional Overcurrent 1
32	Neutral Instantaneous Overcurrent 1
48	Neutral Time Overcurrent 1
56	Neutral Directional Overcurrent 1
57	Neutral Directional Overcurrent 2
60	Negative Sequence Directional Overcurrent 1
61	Negative Sequence Directional Overcurrent 2
64	Ground Instantaneous Overcurrent 1
80	Ground Time Overcurrent 1
86	Restricted Ground Fault 1
87	Restricted Ground Fault 2
88	Restricted Ground Fault 3

Bitmask	Element
89	Restricted Ground Fault 4
90	Restricted Ground Fault 5
91	Restricted Ground Fault 6
101	Change Phase Rotation
120	Negative Sequence Overvoltage 1
121	Negative Sequence Overvoltage 2
122	Negative Sequence Overvoltage 3
125	Generator Unbalance
140	Auxiliary Undervoltage 1
141	Auxiliary Undervoltage 2
144	Phase Undervoltage 1
145	Phase Undervoltage 2
146	Phase Undervoltage 3
148	Auxiliary Overvoltage 1
149	Auxiliary Overvoltage 2
151	Phase Overvoltage 1
152	Phase Overvoltage 2
153	Phase Overvoltage 3
156	Neutral Overvoltage 1
157	Neutral Overvoltage 2
158	Neutral Overvoltage 3
160	Phase Distance Zone 1
161	Phase Distance Zone 2
162	Phase Distance Zone 3
190	Power Swing Detect
210	Volt per Hertz 1
211	Volt per Hertz 2
214	Sensitive Directional Power 1
215	Sensitive Directional Power 2
221	100% Stator Ground
222	Split Phase Protection
224	SRC1 VT Fuse Failure
225	SRC2 VT Fuse Failure
226	SRC3 VT Fuse Failure
227	SRC4 VT Fuse Failure
232	SRC1 50DD (Disturbance Detection)
233	SRC2 50DD (Disturbance Detection)
234	SRC3 50DD (Disturbance Detection)
235	SRC4 50DD (Disturbance Detection)
265	Stator Differential
272	CT Fail 1
273	CT Fail 2
274	CT Fail 3
275	CT Fail 4
280	Breaker Failure 1
281	Breaker Failure 2
282	Breaker Failure 3
283	Breaker Failure 4
294	Breaker 1 Flashover
295	Breaker 2 Flashover
296	Accidental Energization
300	Loss Of Excitation
311	Phasor measurement unit one-shot

Bitmask	Element
312	Synchrocheck 1
313	Synchrocheck 2
314	Synchrocheck 3
315	Synchrocheck 4
330	Third harmonic neutral undervoltage
336	Setting Group
337	Reset
344	Overfrequency 1
345	Overfrequency 2
346	Overfrequency 3
347	Overfrequency 4
352	Underfrequency 1
353	Underfrequency 2
354	Underfrequency 3
355	Underfrequency 4
356	Underfrequency 5
357	Underfrequency 6
388	Selector switch 1
389	Selector switch 2
390	Control pushbutton 1
391	Control pushbutton 2
392	Control pushbutton 3
393	Control pushbutton 4
394	Control pushbutton 5
395	Control pushbutton 6
396	Control pushbutton 7
400	FlexElement 1
401	FlexElement 2
402	FlexElement 3
403	FlexElement 4
404	FlexElement 5
405	FlexElement 6
406	FlexElement 7
407	FlexElement 8
408	FlexElement 9
409	FlexElement 10
410	FlexElement 11
411	FlexElement 12
412	FlexElement 13
413	FlexElement 14
414	FlexElement 15
415	FlexElement 16
420	Non-volatile Latch 1
421	Non-volatile Latch 2
422	Non-volatile Latch 3
423	Non-volatile Latch 4
424	Non-volatile Latch 5
425	Non-volatile Latch 6
426	Non-volatile Latch 7
427	Non-volatile Latch 8
428	Non-volatile Latch 9
429	Non-volatile Latch 10
430	Non-volatile Latch 11

Bitmask	Element
431	Non-volatile Latch 12
432	Non-volatile Latch 13
433	Non-volatile Latch 14
434	Non-volatile Latch 15
435	Non-volatile Latch 16
530	Frequency Rate of Change 1
531	Frequency Rate of Change 2
532	Frequency Rate of Change 3
533	Frequency Rate of Change 4
544	Digital Counter 1
545	Digital Counter 2
546	Digital Counter 3
547	Digital Counter 4
548	Digital Counter 5
549	Digital Counter 6
550	Digital Counter 7
551	Digital Counter 8
692	Digital Element 1
693	Digital Element 2
694	Digital Element 3
695	Digital Element 4
696	Digital Element 5
697	Digital Element 6
698	Digital Element 7
699	Digital Element 8
700	Digital Element 9
701	Digital Element 10
702	Digital Element 11
703	Digital Element 12
704	Digital Element 13
705	Digital Element 14
706	Digital Element 15
707	Digital Element 16
708	Digital Element 17
709	Digital Element 18
710	Digital Element 19
711	Digital Element 20
712	Digital Element 21
713	Digital Element 22
714	Digital Element 23
715	Digital Element 24
716	Digital Element 25
717	Digital Element 26
718	Digital Element 27
719	Digital Element 28
720	Digital Element 29
721	Digital Element 30
722	Digital Element 31
723	Digital Element 32
724	Digital Element 33
725	Digital Element 34
726	Digital Element 35
727	Digital Element 36

Bitmask	Element
728	Digital Element 37
729	Digital Element 38
730	Digital Element 39
731	Digital Element 40
732	Digital Element 41
733	Digital Element 42
734	Digital Element 43
735	Digital Element 44
736	Digital Element 45
737	Digital Element 46
738	Digital Element 47
739	Digital Element 48
740	Phasor Measurement Unit 1 Frequency
746	Phasor Measurement Unit 1 Voltage
752	Phasor Measurement Unit 1 Current
758	Phasor Measurement Unit 1 Power
764	PMU 1 Rate of Change of Frequency
823	Phasor Measurement Unit 1
842	Trip Bus 1
843	Trip Bus 2
844	Trip Bus 3
845	Trip Bus 4
846	Trip Bus 5
847	Trip Bus 6
849	RTD Input 1
850	RTD Input 2
851	RTD Input 3
852	RTD Input 4
853	RTD Input 5
854	RTD Input 6
855	RTD Input 7
856	RTD Input 8
857	RTD Input 9
858	RTD Input 10
859	RTD Input 11
860	RTD Input 12
861	RTD Input 13
862	RTD Input 14
863	RTD Input 15
864	RTD Input 16
865	RTD Input 17
866	RTD Input 18
867	RTD Input 19
868	RTD Input 20
869	RTD Input 21
870	RTD Input 22
871	RTD Input 23
872	RTD Input 24
873	RTD Input 25
874	RTD Input 26
875	RTD Input 27
876	RTD Input 28
877	RTD Input 29

Bitmask	Element
878	RTD Input 30
879	RTD Input 31
880	RTD Input 32
881	RTD Input 33
882	RTD Input 34
883	RTD Input 35
884	RTD Input 36
885	RTD Input 37
886	RTD Input 38
887	RTD Input 39
888	RTD Input 40
889	RTD Input 41
890	RTD Input 42
891	RTD Input 43
892	RTD Input 44
893	RTD Input 45
894	RTD Input 46
895	RTD Input 47
896	RTD Input 48
900	User-Programmable Pushbutton 1
901	User-Programmable Pushbutton 2
902	User-Programmable Pushbutton 3
903	User-Programmable Pushbutton 4
904	User-Programmable Pushbutton 5
905	User-Programmable Pushbutton 6
906	User-Programmable Pushbutton 7
907	User-Programmable Pushbutton 8
908	User-Programmable Pushbutton 9
909	User-Programmable Pushbutton 10
910	User-Programmable Pushbutton 11
911	User-Programmable Pushbutton 12
912	User-Programmable Pushbutton 13
913	User-Programmable Pushbutton 14
914	User-Programmable Pushbutton 15
915	User-Programmable Pushbutton 16
916	Frequency out-of-band accumulation 1
917	Frequency out-of-band accumulation 2
920	Disconnect switch 1
921	Disconnect switch 2
922	Disconnect switch 3
923	Disconnect switch 4
924	Disconnect switch 5
925	Disconnect switch 6
926	Disconnect switch 7
927	Disconnect switch 8
928	Disconnect switch 9
929	Disconnect switch 10
930	Disconnect switch 11
931	Disconnect switch 12
932	Disconnect switch 13
933	Disconnect switch 14
934	Disconnect switch 15
935	Disconnect switch 16

Bitmask	Element
968	Breaker 1
969	Breaker 2
970	Breaker 3
971	Breaker 4
974	Breaker 1
975	Breaker 2
976	Breaker 3
977	Breaker 4
991	Remote RTD Input 1
992	Remote RTD Input 2
993	Remote RTD Input 3
994	Remote RTD Input 4
995	Remote RTD Input 5
996	Remote RTD Input 6
997	Remote RTD Input 7
998	Remote RTD Input 8
999	Remote RTD Input 9
1000	Remote RTD Input 10
1001	Remote RTD Input 11
1002	Remote RTD Input 12
1009	Sh Stat Ground
1010	Field Ground
1011	Field Current
1012	Thermal overload protection 1
1013	Thermal overload protection 2

F126
ENUMERATION: NO/YES CHOICE

0 = No, 1 = Yes

F127
ENUMERATION: LATCHED OR SELF-RESETTING

0 = Latched, 1 = Self-Reset

F128
ENUMERATION: CONTACT INPUT THRESHOLD

0 = 17 V DC, 1 = 33 V DC, 2 = 84 V DC, 3 = 166 V DC

F129
ENUMERATION: FLEXLOGIC TIMER TYPE

0 = millisecond, 1 = second, 2 = minute

F131
ENUMERATION: FORCED CONTACT OUTPUT STATE

0 = Disabled, 1 = Energized, 2 = De-energized, 3 = Freeze

F133
ENUMERATION: PROGRAM STATE

0 = Not Programmed, 1 = Programmed

F134
ENUMERATION: PASS/FAIL

0 = Fail, 1 = OK, 2 = n/a

F137
ENUMERATION: USER-PROGRAMMABLE PUSHBUTTON FUNCTION

0 = Disabled, 1 = Self-Reset, 2 = Latched

F141
ENUMERATION: SELF TEST ERRORS

Bitmask	Error
0	Any Self Tests
1	IRIG-B Failure
2	Port 1 Offline
3	Port 2 Offline
4	Port 3 Offline
5	Port 4 Offline
6	Port 5 Offline
7	Port 6 Offline
8	RRTD Communications Failure
9	Voltage Monitor
10	FlexLogic Error Token
11	Equipment Mismatch
12	Process Bus Failure
13	Unit Not Programmed
14	System Exception
15	Latching Output Discrepancy
17	Maintenance Alert 01
18	SNTP Failure
19	Maintenance Alert
20	Maintenance Alert
21	Maintenance Alert
22	Temperature Monitor
23	Process Bus Trouble
24	Brick Trouble
25	Field RTD Trouble
26	Field TDR Trouble
27	Remote Device Offline
28	Direct Device Offline
29	Maintenance Alert
30	Any Minor Error
31	Any Major Error
33	Maintenance Alert
64	Maintenance Alert
65	IEC 61850 Data Set
66	Aggregator Error
67	Unit Not Calibrated
68	Settings Save Error
69	SRAM Data Error
70	Program Memory
71	Watchdog Error
72	Low On Memory
73	Prototype Firmware
74	Module Failure 01
75	Module Failure 02
76	Module Failure 03
77	Module Failure 04
78	Module Failure 05
79	Module Failure 06
80	Module Failure 07
81	Module Failure 08
82	Module Failure 09
83	Incompatible H/W
84	Module Failure 10
85	Module Failure 11
86	Module Failure 12
87	High ENET Traffic
89	Relay Restart
90	FGM Failure
91	FGM Failure
92	FGM Failure
93	FGM Failure
94	FGM Failure
95	FGM Error
96	Maintenance Alert
97	PHY Monitor
98	Storage Media Alarm
99	Wrong Transceiver
100	Power Supply Warning

F143
UR_UINT32: 32 BIT ERROR CODE (F141 specifies bit number)

A bit value of 0 = no error, 1 = error

F144
ENUMERATION: FORCED CONTACT INPUT STATE

0 = Disabled, 1 = Open, 2 = Closed

F146
ENUMERATION: MISCELLANEOUS EVENT CAUSES

Bitmask	Definition
0	Events Cleared
1	Oscillography Triggered
2	Date/time Changed
3	Default Settings Loaded
4	Test Mode Forcing On
5	Test Mode Forcing Off
6	Power On
7	Power Off
8	Relay In Service
9	Relay Out Of Service
10	Watchdog Reset
11	Oscillography Clear
12	Reboot Command
13	LED Test Initiated
14	Flash Programming
15	Fault Report Trigger
16	User Programmable Fault Report Trigger
17	---
18	Reload CT/VT module Settings
19	---
20	Ethernet Port 1 Offline
21	Ethernet Port 2 Offline
22	Ethernet Port 3 Offline
23	Ethernet Port 4 Offline
24	Ethernet Port 5 Offline
25	Ethernet Port 6 Offline
26	Test-Blocked Mode
27	Test Mode Test
28	Test Mode Disabled
29	Temperature Warning On
30	Temperature Warning Off
31	Unauthorized Access
32	System Integrity Recovery
33	System Integrity Recovery 06
34	System Integrity Recovery 07

F151
ENUMERATION: RTD SELECTION

Bitmask	RTD#	Bitmask	RTD#	Bitmask	RTD#
0	NONE	17	RTD 17	33	RTD 33
1	RTD 1	18	RTD 18	34	RTD 34
2	RTD 2	19	RTD 19	35	RTD 35
3	RTD 3	20	RTD 20	36	RTD 36
4	RTD 4	21	RTD 21	37	RTD 37
5	RTD 5	22	RTD 22	38	RTD 38
6	RTD 6	23	RTD 23	39	RTD 39
7	RTD 7	24	RTD 24	40	RTD 40
8	RTD 8	25	RTD 25	41	RTD 41
9	RTD 9	26	RTD 26	42	RTD 42
10	RTD 10	27	RTD 27	43	RTD 43
11	RTD 11	28	RTD 28	44	RTD 44
12	RTD 12	29	RTD 29	45	RTD 45
13	RTD 13	30	RTD 30	46	RTD 46
14	RTD 14	31	RTD 31	47	RTD 47
15	RTD 15	32	RTD 32	48	RTD 48
16	RTD 16				

F152
ENUMERATION: SETTING GROUP

0 = Active Group, 1 = Group 1, 2 = Group 2, 3 = Group 3
4 = Group 4, 5 = Group 5, 6 = Group 6

F153
ENUMERATION: DISTANCE TRANSFORMER CONNECTION

Bitmask	Type	Bitmask	Type	Bitmask	Type
0	None	5	Dy9	10	Yd7
1	Dy1	6	Dy11	11	Yd9
2	Dy3	7	Yd1	12	Yd11
3	Dy5	8	Yd3		
4	Dy7	9	Yd5		

F154
ENUMERATION: DISTANCE DIRECTION

0 = Forward, 1 = Reverse, 2 = Non-Directional

F155
ENUMERATION: REMOTE DEVICE STATE

0 = Offline, 1 = Online

B

F156
ENUMERATION: REMOTE INPUT BIT PAIRS

Bitmask	Value	Bitmask	Value
0	None	35	UserSt-3
1	DNA-1	36	UserSt-4
2	DNA-2	37	UserSt-5
3	DNA-3	38	UserSt-6
4	DNA-4	39	UserSt-7
5	DNA-5	40	UserSt-8
6	DNA-6	41	UserSt-9
7	DNA-7	42	UserSt-10
8	DNA-8	43	UserSt-11
9	DNA-9	44	UserSt-12
10	DNA-10	45	UserSt-13
11	DNA-11	46	UserSt-14
12	DNA-12	47	UserSt-15
13	DNA-13	48	UserSt-16
14	DNA-14	49	UserSt-17
15	DNA-15	50	UserSt-18
16	DNA-16	51	UserSt-19
17	DNA-17	52	UserSt-20
18	DNA-18	53	UserSt-21
19	DNA-19	54	UserSt-22
20	DNA-20	55	UserSt-23
21	DNA-21	56	UserSt-24
22	DNA-22	57	UserSt-25
23	DNA-23	58	UserSt-26
24	DNA-24	59	UserSt-27
25	DNA-25	60	UserSt-28
26	DNA-26	61	UserSt-29
27	DNA-27	62	UserSt-30
28	DNA-28	63	UserSt-31
29	DNA-29	64	UserSt-32
30	DNA-30	65	Dataset Item 1
31	DNA-31	66	Dataset Item 2
32	DNA-32	67	Dataset Item 3
33	UserSt-1	↓	↓
34	UserSt-2	96	Dataset Item 32

F157
ENUMERATION: BREAKER MODE

0 = 3-Pole, 1 = 1-Pole

F166
ENUMERATION: AUXILIARY VT CONNECTION TYPE

0 = Vn, 1 = Vag, 2 = Vbg, 3 = Vcg, 4 = Vab, 5 = Vbc, 6 = Vca

F167
ENUMERATION: SIGNAL SOURCE

0 = SRC 1, 1 = SRC 2, 2 = SRC 3, 3 = SRC 4,
4 = SRC 5, 5 = SRC 6

F172
ENUMERATION: SLOT LETTERS

Bitmask	Slot	Bitmask	Slot	Bitmask	Slot	Bitmask	Slot
0	F	4	K	8	P	12	U
1	G	5	L	9	R	13	V
2	H	6	M	10	S	14	W
3	J	7	N	11	T	15	X

F173
ENUMERATION: DCmA INPUT/OUTPUT RANGE

Bitmask	DCmA input/output range
0	0 to –1 mA
1	0 to 1 mA
2	–1 to 1 mA
3	0 to 5 mA
4	0 to 10 mA
5	0 to 20 mA
6	4 to 20 mA

F174
ENUMERATION: TRANSDUCER RTD INPUT TYPE

0 = 100 Ohm Platinum, 1 = 120 Ohm Nickel,
2 = 100 Ohm Nickel, 3 = 10 Ohm Copper

F176
ENUMERATION: SYNCHROCHECK DEAD SOURCE SELECT

Bitmask	Synchrocheck dead source
0	None
1	LV1 and DV2
2	DV1 and LV2
3	DV1 or DV2
4	DV1 Xor DV2
5	DV1 and DV2

F177
ENUMERATION: COMMUNICATION PORT

0 = None, 1 = COM1-RS485 (not applicable to UR firmware 7.00),
2 = COM2-RS485, 3 = Front Panel-RS232, 4 = Network - TCP,
5 = Network - UDP

F179
ENUMERATION: NEGATIVE SEQUENCE DIRECTIONAL OVERCURRENT TYPE

0 = Neg Sequence, 1 = Zero Sequence

F183
ENUMERATION: AC INPUT WAVEFORMS

Bitmask	Definition
0	Off
1	8 samples/cycle
2	16 samples/cycle
3	32 samples/cycle
4	64 samples/cycle

F184
ENUMERATION: IEC GOOSE DATASET

Value	IEC 61850 dataset
0	Fixed
1	GooseIn 1
2	GooseIn 2
3	GooseIn 3
4	GooseIn 4
5	GooseIn 5
6	GooseIn 6
7	GooseIn 7
8	GooseIn 8
9	GooseIn 9
10	GooseIn 10
11	GooseIn 11
12	GooseIn 12
13	GooseIn 13
14	GooseIn 14
15	GooseIn 15
16	GooseIn 16

F186
ENUMERATION: MEASUREMENT MODE

0 = Phase to Ground, 1 = Phase to Phase

F190
ENUMERATION: SIMULATED KEYPRESS

Bitmask	Keypress	Bitmask	Keypress
0	No key --- use between real keys	23	Reset
1	1	24	User 1
2	2	25	User 2
3	3	26	User 3
4	4	27	User-programmable key 1
5	5	28	User-programmable key 2
6	6	29	User-programmable key 3
7	7	30	User-programmable key 4
8	8	31	User-programmable key 5
9	9	32	User-programmable key 6
10	0	33	User-programmable key 7
11	Decimal Point	34	User-programmable key 8
12	Plus/Minus	35	User-programmable key 9
13	Value Up	36	User-programmable key 10
14	Value Down	37	User-programmable key 11
15	Message Up	38	User-programmable key 12
16	Message Down	39	User 4 (control pushbutton)
17	Message Left	40	User 5 (control pushbutton)
18	Message Right	41	User 6 (control pushbutton)
19	Menu	42	User 7 (control pushbutton)
20	Help	43	User-programmable key 13
21	Escape	44	User-programmable key 14
22	Enter	45	User-programmable key 15
		46	User-programmable key 16

F192
ENUMERATION: ETHERNET OPERATION MODE

0 = Half-Duplex, 1 = Full-Duplex

F193
ENUMERATION: ACCIDENTAL ENERG. ARMING MODE

0 = UV and Offline, 1 = UV or Offline

F194
ENUMERATION: DNP SCALE

0 = 0.01, 1 = 0.1, 2 = 1, 3 = 10, 4 = 100, 5 = 1000, 6 = 10000, 7 = 100000, 8 = 0.001

F196
ENUMERATION: NEUTRAL DIRECTIONAL OVERCURRENT OPERATING CURRENT

0 = Calculated 3I0, 1 = Measured IG

F200
TEXT40: 40-CHARACTER ASCII TEXT

20 registers, 16 Bits: 1st Char MSB, 2nd Char LSB

B

F202
TEXT20: 20-CHARACTER ASCII TEXT

10 registers, 16 Bits: 1st Char MSB, 2nd Char LSB

F203
TEXT16: 16-CHARACTER ASCII TEXT

F204
TEXT80: 80-CHARACTER ASCII TEXT

F205
TEXT12: 12-CHARACTER ASCII TEXT

F206
TEXT6: 6-CHARACTER ASCII TEXT

F207
TEXT4: 4-CHARACTER ASCII TEXT

F208
TEXT2: 2-CHARACTER ASCII TEXT

F209
TEXT65: 65-CHARACTER ASCII TEXT

F211
ENUMERATION: SOURCE SELECTION

0 = None, 1 = SRC 1, 2 = SRC 2, 3 = SRC 3, 4 = SRC 4, 5 = SRC 5, 6 = SRC 6

F213
TEXT32: 32-CHARACTER ASCII TEXT

F214
TEXT64: 64-CHARACTER ASCII TEXTF220
ENUMERATION: PUSHBUTTON MESSAGE PRIORITY

Value	Priority
0	Disabled
1	Normal
2	High Priority

F224
ENUMERATION: RATE TREND FOR FREQ RATE OF CHANGE

0 = Increasing, 1 = Decreasing, 2 = Bidirectional

F225
ENUMERATION: SPLIT PHASE PROTECTION MODE

0 = Over, 1 = Over-Under

F230
ENUMERATION: DIRECTIONAL POLARIZING

0 = Voltage, 1 = Current, 2 = Dual, 3 = Dual-V, 4 = Dual-I

F231
ENUMERATION: POLARIZING VOLTAGE

0 = Calculated V0, 1 = Measured VX

F232
ENUMERATION: CONFIGURABLE GOOSE Tx DATASET ITEMS

Value	IEC 61850 Tx dataset item
0	None
1	GGIO1.ST.Ind1.q
2	GGIO1.ST.Ind1.stVal
3	GGIO1.ST.Ind2.q
4	GGIO1.ST.Ind2.stVal
↓	↓
255	GGIO1.ST.Ind128.q
256	GGIO1.ST.Ind128.stVal
257	MMXU1.MX.TotW.mag.f
258	MMXU1.MX.TotVAr.mag.f
259	MMXU1.MX.TotVA.mag.f
260	MMXU1.MX.TotPF.mag.f
261	MMXU1.MX.Hz.mag.f
262	MMXU1.MX.PPV.phsAB.cVal.mag.f
263	MMXU1.MX.PPV.phsAB.cVal.ang.f
264	MMXU1.MX.PPV.phsBC.cVal.mag.f
265	MMXU1.MX.PPV.phsBC.cVal.ang.f
266	MMXU1.MX.PPV.phsCA.cVal.mag.f
267	MMXU1.MX.PPV.phsCA.cVal.ang.f
268	MMXU1.MX.PhV.phsA.cVal.mag.f
269	MMXU1.MX.PhV.phsA.cVal.ang.f
270	MMXU1.MX.PhV.phsB.cVal.mag.f
271	MMXU1.MX.PhV.phsB.cVal.ang.f
272	MMXU1.MX.PhV.phsC.cVal.mag.f
273	MMXU1.MX.PhV.phsC.cVal.ang.f
274	MMXU1.MX.A.phsA.cVal.mag.f
275	MMXU1.MX.A.phsA.cVal.ang.f
276	MMXU1.MX.A.phsB.cVal.mag.f
277	MMXU1.MX.A.phsB.cVal.ang.f
278	MMXU1.MX.A.phsC.cVal.mag.f
279	MMXU1.MX.A.phsC.cVal.ang.f
280	MMXU1.MX.A.neut.cVal.mag.f
281	MMXU1.MX.A.neut.cVal.ang.f
282	MMXU1.MX.W.phsA.cVal.mag.f
283	MMXU1.MX.W.phsB.cVal.mag.f
284	MMXU1.MX.W.phsC.cVal.mag.f
285	MMXU1.MX.VAr.phsA.cVal.mag.f
286	MMXU1.MX.VAr.phsB.cVal.mag.f
287	MMXU1.MX.VAr.phsC.cVal.mag.f

Value	IEC 61850 Tx dataset item
288	MMXU1.MX.VA.phsA.cVal.mag.f
289	MMXU1.MX.VA.phsB.cVal.mag.f
290	MMXU1.MX.VA.phsC.cVal.mag.f
291	MMXU1.MX.PF.phsA.cVal.mag.f
292	MMXU1.MX.PF.phsB.cVal.mag.f
293	MMXU1.MX.PF.phsC.cVal.mag.f
294	MMXU2.MX.TotW.mag.f
295	MMXU2.MX.TotVAr.mag.f
296	MMXU2.MX.TotVA.mag.f
297	MMXU2.MX.TotPF.mag.f
298	MMXU2.MX.Hz.mag.f
299	MMXU2.MX.PPV.phsAB.cVal.mag.f
300	MMXU2.MX.PPV.phsAB.cVal.ang.f
301	MMXU2.MX.PPV.phsBC.cVal.mag.f
302	MMXU2.MX.PPV.phsBC.cVal.ang.f
303	MMXU2.MX.PPV.phsCA.cVal.mag.f
304	MMXU2.MX.PPV.phsCA.cVal.ang.f
305	MMXU2.MX.PhV.phsA.cVal.mag.f
306	MMXU2.MX.PhV.phsA.cVal.ang.f
307	MMXU2.MX.PhV.phsB.cVal.mag.f
308	MMXU2.MX.PhV.phsB.cVal.ang.f
309	MMXU2.MX.PhV.phsC.cVal.mag.f
310	MMXU2.MX.PhV.phsC.cVal.ang.f
311	MMXU2.MX.A.phsA.cVal.mag.f
312	MMXU2.MX.A.phsA.cVal.ang.f
313	MMXU2.MX.A.phsB.cVal.mag.f
314	MMXU2.MX.A.phsB.cVal.ang.f
315	MMXU2.MX.A.phsC.cVal.mag.f
316	MMXU2.MX.A.phsC.cVal.ang.f
317	MMXU2.MX.A.neut.cVal.mag.f
318	MMXU2.MX.A.neut.cVal.ang.f
319	MMXU2.MX.W.phsA.cVal.mag.f
320	MMXU2.MX.W.phsB.cVal.mag.f
321	MMXU2.MX.W.phsC.cVal.mag.f
322	MMXU2.MX.VAr.phsA.cVal.mag.f
323	MMXU2.MX.VAr.phsB.cVal.mag.f
324	MMXU2.MX.VAr.phsC.cVal.mag.f
325	MMXU2.MX.VA.phsA.cVal.mag.f
326	MMXU2.MX.VA.phsB.cVal.mag.f
327	MMXU2.MX.VA.phsC.cVal.mag.f
328	MMXU2.MX.PF.phsA.cVal.mag.f
329	MMXU2.MX.PF.phsB.cVal.mag.f
330	MMXU2.MX.PF.phsC.cVal.mag.f
331	MMXU3.MX.TotW.mag.f
332	MMXU3.MX.TotVAr.mag.f
333	MMXU3.MX.TotVA.mag.f
334	MMXU3.MX.TotPF.mag.f
335	MMXU3.MX.Hz.mag.f
336	MMXU3.MX.PPV.phsAB.cVal.mag.f
337	MMXU3.MX.PPV.phsAB.cVal.ang.f
338	MMXU3.MX.PPV.phsBC.cVal.mag.f
339	MMXU3.MX.PPV.phsBC.cVal.ang.f
340	MMXU3.MX.PPV.phsCA.cVal.mag.f

Value	IEC 61850 Tx dataset item
341	MMXU3.MX.PPV.phsCA.cVal.ang.f
342	MMXU3.MX.PhV.phsA.cVal.mag.f
343	MMXU3.MX.PhV.phsA.cVal.ang.f
344	MMXU3.MX.PhV.phsB.cVal.mag.f
345	MMXU3.MX.PhV.phsB.cVal.ang.f
346	MMXU3.MX.PhV.phsC.cVal.mag.f
347	MMXU3.MX.PhV.phsC.cVal.ang.f
348	MMXU3.MX.A.phsA.cVal.mag.f
349	MMXU3.MX.A.phsA.cVal.ang.f
350	MMXU3.MX.A.phsB.cVal.mag.f
351	MMXU3.MX.A.phsB.cVal.ang.f
352	MMXU3.MX.A.phsC.cVal.mag.f
353	MMXU3.MX.A.phsC.cVal.ang.f
354	MMXU3.MX.A.neut.cVal.mag.f
355	MMXU3.MX.A.neut.cVal.ang.f
356	MMXU3.MX.W.phsA.cVal.mag.f
357	MMXU3.MX.W.phsB.cVal.mag.f
358	MMXU3.MX.W.phsC.cVal.mag.f
359	MMXU3.MX.VAr.phsA.cVal.mag.f
360	MMXU3.MX.VAr.phsB.cVal.mag.f
361	MMXU3.MX.VAr.phsC.cVal.mag.f
362	MMXU3.MX.VA.phsA.cVal.mag.f
363	MMXU3.MX.VA.phsB.cVal.mag.f
364	MMXU3.MX.VA.phsC.cVal.mag.f
365	MMXU3.MX.PF.phsA.cVal.mag.f
366	MMXU3.MX.PF.phsB.cVal.mag.f
367	MMXU3.MX.PF.phsC.cVal.mag.f
368	MMXU4.MX.TotW.mag.f
369	MMXU4.MX.TotVAr.mag.f
370	MMXU4.MX.TotVA.mag.f
371	MMXU4.MX.TotPF.mag.f
372	MMXU4.MX.Hz.mag.f
373	MMXU4.MX.PPV.phsAB.cVal.mag.f
374	MMXU4.MX.PPV.phsAB.cVal.ang.f
375	MMXU4.MX.PPV.phsBC.cVal.mag.f
376	MMXU4.MX.PPV.phsBC.cVal.ang.f
377	MMXU4.MX.PPV.phsCA.cVal.mag.f
378	MMXU4.MX.PPV.phsCA.cVal.ang.f
379	MMXU4.MX.PhV.phsA.cVal.mag.f
380	MMXU4.MX.PhV.phsA.cVal.ang.f
381	MMXU4.MX.PhV.phsB.cVal.mag.f
382	MMXU4.MX.PhV.phsB.cVal.ang.f
383	MMXU4.MX.PhV.phsC.cVal.mag.f
384	MMXU4.MX.PhV.phsC.cVal.ang.f
385	MMXU4.MX.A.phsA.cVal.mag.f
386	MMXU4.MX.A.phsA.cVal.ang.f
387	MMXU4.MX.A.phsB.cVal.mag.f
388	MMXU4.MX.A.phsB.cVal.ang.f
389	MMXU4.MX.A.phsC.cVal.mag.f
390	MMXU4.MX.A.phsC.cVal.ang.f
391	MMXU4.MX.A.neut.cVal.mag.f
392	MMXU4.MX.A.neut.cVal.ang.f
393	MMXU4.MX.W.phsA.cVal.mag.f

Value	IEC 61850 Tx dataset item
394	MMXU4.MX.W.phsB.cVal.mag.f
395	MMXU4.MX.W.phsC.cVal.mag.f
396	MMXU4.MX.VAr.phsA.cVal.mag.f
397	MMXU4.MX.VAr.phsB.cVal.mag.f
398	MMXU4.MX.VAr.phsC.cVal.mag.f
399	MMXU4.MX.VA.phsA.cVal.mag.f
400	MMXU4.MX.VA.phsB.cVal.mag.f
401	MMXU4.MX.VA.phsC.cVal.mag.f
402	MMXU4.MX.PF.phsA.cVal.mag.f
403	MMXU4.MX.PF.phsB.cVal.mag.f
404	MMXU4.MX.PF.phsC.cVal.mag.f
405	MMXU5.MX.TotW.mag.f
406	MMXU5.MX.TotVAr.mag.f
407	MMXU5.MX.TotVA.mag.f
408	MMXU5.MX.TotPF.mag.f
409	MMXU5.MX.Hz.mag.f
410	MMXU5.MX.PPV.phsAB.cVal.mag.f
411	MMXU5.MX.PPV.phsAB.cVal.ang.f
412	MMXU5.MX.PPV.phsBC.cVal.mag.f
413	MMXU5.MX.PPV.phsBC.cVal.ang.f
414	MMXU5.MX.PPV.phsCA.cVal.mag.f
415	MMXU5.MX.PPV.phsCA.cVal.ang.f
416	MMXU5.MX.PhV.phsA.cVal.mag.f
417	MMXU5.MX.PhV.phsA.cVal.ang.f
418	MMXU5.MX.PhV.phsB.cVal.mag.f
419	MMXU5.MX.PhV.phsB.cVal.ang.f
420	MMXU5.MX.PhV.phsC.cVal.mag.f
421	MMXU5.MX.PhV.phsC.cVal.ang.f
422	MMXU5.MX.A.phsA.cVal.mag.f
423	MMXU5.MX.A.phsA.cVal.ang.f
424	MMXU5.MX.A.phsB.cVal.mag.f
425	MMXU5.MX.A.phsB.cVal.ang.f
426	MMXU5.MX.A.phsC.cVal.mag.f
427	MMXU5.MX.A.phsC.cVal.ang.f
428	MMXU5.MX.A.neut.cVal.mag.f
429	MMXU5.MX.A.neut.cVal.ang.f
430	MMXU5.MX.W.phsA.cVal.mag.f
431	MMXU5.MX.W.phsB.cVal.mag.f
432	MMXU5.MX.W.phsC.cVal.mag.f
433	MMXU5.MX.VAr.phsA.cVal.mag.f
434	MMXU5.MX.VAr.phsB.cVal.mag.f
435	MMXU5.MX.VAr.phsC.cVal.mag.f
436	MMXU5.MX.VA.phsA.cVal.mag.f
437	MMXU5.MX.VA.phsB.cVal.mag.f
438	MMXU5.MX.VA.phsC.cVal.mag.f
439	MMXU5.MX.PF.phsA.cVal.mag.f
440	MMXU5.MX.PF.phsB.cVal.mag.f
441	MMXU5.MX.PF.phsC.cVal.mag.f
442	MMXU6.MX.TotW.mag.f
443	MMXU6.MX.TotVAr.mag.f
444	MMXU6.MX.TotVA.mag.f
445	MMXU6.MX.TotPF.mag.f
446	MMXU6.MX.Hz.mag.f

Value	IEC 61850 Tx dataset item
447	MMXU6.MX.PPV.phsAB.cVal.mag.f
448	MMXU6.MX.PPV.phsAB.cVal.ang.f
449	MMXU6.MX.PPV.phsBC.cVal.mag.f
450	MMXU6.MX.PPV.phsBC.cVal.ang.f
451	MMXU6.MX.PPV.phsCA.cVal.mag.f
452	MMXU6.MX.PPV.phsCA.cVal.ang.f
453	MMXU6.MX.PhV.phsA.cVal.mag.f
454	MMXU6.MX.PhV.phsA.cVal.ang.f
455	MMXU6.MX.PhV.phsB.cVal.mag.f
456	MMXU6.MX.PhV.phsB.cVal.ang.f
457	MMXU6.MX.PhV.phsC.cVal.mag.f
458	MMXU6.MX.PhV.phsC.cVal.ang.f
459	MMXU6.MX.A.phsA.cVal.mag.f
460	MMXU6.MX.A.phsA.cVal.ang.f
461	MMXU6.MX.A.phsB.cVal.mag.f
462	MMXU6.MX.A.phsB.cVal.ang.f
463	MMXU6.MX.A.phsC.cVal.mag.f
464	MMXU6.MX.A.phsC.cVal.ang.f
465	MMXU6.MX.A.neut.cVal.mag.f
466	MMXU6.MX.A.neut.cVal.ang.f
467	MMXU6.MX.W.phsA.cVal.mag.f
468	MMXU6.MX.W.phsB.cVal.mag.f
469	MMXU6.MX.W.phsC.cVal.mag.f
470	MMXU6.MX.VAr.phsA.cVal.mag.f
471	MMXU6.MX.VAr.phsB.cVal.mag.f
472	MMXU6.MX.VAr.phsC.cVal.mag.f
473	MMXU6.MX.VA.phsA.cVal.mag.f
474	MMXU6.MX.VA.phsB.cVal.mag.f
475	MMXU6.MX.VA.phsC.cVal.mag.f
476	MMXU6.MX.PF.phsA.cVal.mag.f
477	MMXU6.MX.PF.phsB.cVal.mag.f
478	MMXU6.MX.PF.phsC.cVal.mag.f
479	GGIO4.MX.AnIn1.mag.f
480	GGIO4.MX.AnIn2.mag.f
481	GGIO4.MX.AnIn3.mag.f
482	GGIO4.MX.AnIn4.mag.f
483	GGIO4.MX.AnIn5.mag.f
484	GGIO4.MX.AnIn6.mag.f
485	GGIO4.MX.AnIn7.mag.f
486	GGIO4.MX.AnIn8.mag.f
487	GGIO4.MX.AnIn9.mag.f
488	GGIO4.MX.AnIn10.mag.f
489	GGIO4.MX.AnIn11.mag.f
490	GGIO4.MX.AnIn12.mag.f
491	GGIO4.MX.AnIn13.mag.f
492	GGIO4.MX.AnIn14.mag.f
493	GGIO4.MX.AnIn15.mag.f
494	GGIO4.MX.AnIn16.mag.f
495	GGIO4.MX.AnIn17.mag.f
496	GGIO4.MX.AnIn18.mag.f
497	GGIO4.MX.AnIn19.mag.f
498	GGIO4.MX.AnIn20.mag.f
499	GGIO4.MX.AnIn21.mag.f

Value	IEC 61850 Tx dataset item
500	GGIO4.MX.AnIn22.mag.f
501	GGIO4.MX.AnIn23.mag.f
502	GGIO4.MX.AnIn24.mag.f
503	GGIO4.MX.AnIn25.mag.f
504	GGIO4.MX.AnIn26.mag.f
505	GGIO4.MX.AnIn27.mag.f
506	GGIO4.MX.AnIn28.mag.f
507	GGIO4.MX.AnIn29.mag.f
508	GGIO4.MX.AnIn30.mag.f
509	GGIO4.MX.AnIn31.mag.f
510	GGIO4.MX.AnIn32.mag.f
511	GGIO5.ST.UIntIn1.q
512	GGIO5.ST.UIntIn1.stVal
513	GGIO5.ST.UIntIn2.q
514	GGIO5.ST.UIntIn2.stVal
515	GGIO5.ST.UIntIn3.q
516	GGIO5.ST.UIntIn3.stVal
517	GGIO5.ST.UIntIn4.q
518	GGIO5.ST.UIntIn4.stVal
519	GGIO5.ST.UIntIn5.q
520	GGIO5.ST.UIntIn5.stVal
521	GGIO5.ST.UIntIn6.q
522	GGIO5.ST.UIntIn6.stVal
523	GGIO5.ST.UIntIn7.q
524	GGIO5.ST.UIntIn7.stVal
525	GGIO5.ST.UIntIn8.q
526	GGIO5.ST.UIntIn8.stVal
527	GGIO5.ST.UIntIn9.q
528	GGIO5.ST.UIntIn9.stVal
529	GGIO5.ST.UIntIn10.q
530	GGIO5.ST.UIntIn10.stVal
531	GGIO5.ST.UIntIn11.q
532	GGIO5.ST.UIntIn11.stVal
533	GGIO5.ST.UIntIn12.q
534	GGIO5.ST.UIntIn12.stVal
535	GGIO5.ST.UIntIn13.q
536	GGIO5.ST.UIntIn13.stVal
537	GGIO5.ST.UIntIn14.q
538	GGIO5.ST.UIntIn14.stVal
539	GGIO5.ST.UIntIn15.q
540	GGIO5.ST.UIntIn15.stVal
541	GGIO5.ST.UIntIn16.q
542	GGIO5.ST.UIntIn16.stVal

F233
ENUMERATION: CONFIGURABLE GOOSE Rx DATASET ITEMS

Value	IEC 61850 GOOSE Rx dataset item
0	None
1	GGIO3.ST.Ind1.q
2	GGIO3.ST.Ind1.stVal
3	GGIO3.ST.Ind2.q
4	GGIO3.ST.Ind2.stVal
↓	↓
127	GGIO3.ST.Ind64q
128	GGIO3.ST.Ind64.stVal
129	GGIO3.MX.AnIn1.mag.f
130	GGIO3.MX.AnIn2.mag.f
131	GGIO3.MX.AnIn3.mag.f
132	GGIO3.MX.AnIn4.mag.f
133	GGIO3.MX.AnIn5.mag.f
134	GGIO3.MX.AnIn6.mag.f
135	GGIO3.MX.AnIn7.mag.f
136	GGIO3.MX.AnIn8.mag.f
137	GGIO3.MX.AnIn9.mag.f
138	GGIO3.MX.AnIn10.mag.f
139	GGIO3.MX.AnIn11.mag.f
140	GGIO3.MX.AnIn12.mag.f
141	GGIO3.MX.AnIn13.mag.f
142	GGIO3.MX.AnIn14.mag.f
143	GGIO3.MX.AnIn15.mag.f
144	GGIO3.MX.AnIn16.mag.f
145	GGIO3.MX.AnIn17.mag.f
146	GGIO3.MX.AnIn18.mag.f
147	GGIO3.MX.AnIn19.mag.f
148	GGIO3.MX.AnIn20.mag.f
149	GGIO3.MX.AnIn21.mag.f
150	GGIO3.MX.AnIn22.mag.f
151	GGIO3.MX.AnIn23.mag.f
152	GGIO3.MX.AnIn24.mag.f
153	GGIO3.MX.AnIn25.mag.f
154	GGIO3.MX.AnIn26.mag.f
155	GGIO3.MX.AnIn27.mag.f
156	GGIO3.MX.AnIn28.mag.f
157	GGIO3.MX.AnIn29.mag.f
158	GGIO3.MX.AnIn30.mag.f
159	GGIO3.MX.AnIn31.mag.f
160	GGIO3.MX.AnIn32.mag.f
161	GGIO3.ST.IndPos1.stVal
162	GGIO3.ST.IndPos2.stVal
163	GGIO3.ST.IndPos3.stVal
164	GGIO3.ST.IndPos4.stVal
165	GGIO3.ST.IndPos5.stVal
166	GGIO3.ST.UIntIn1.q
167	GGIO3.ST.UIntIn1.stVal
168	GGIO3.ST.UIntIn2.q
169	GGIO3.ST.UIntIn2.stVal
170	GGIO3.ST.UIntIn3.q
171	GGIO3.ST.UIntIn3.stVal
172	GGIO3.ST.UIntIn4.q
173	GGIO3.ST.UIntIn4.stVal
174	GGIO3.ST.UIntIn5.q
175	GGIO3.ST.UIntIn5.stVal

Value	IEC 61850 GOOSE Rx dataset item
176	GGIO3.ST.UIntIn6.q
177	GGIO3.ST.UIntIn6.stVal
178	GGIO3.ST.UIntIn7.q
179	GGIO3.ST.UIntIn7.stVal
180	GGIO3.ST.UIntIn8.q
181	GGIO3.ST.UIntIn8.stVal
182	GGIO3.ST.UIntIn9.q
183	GGIO3.ST.UIntIn9.stVal
184	GGIO3.ST.UIntIn10.q
185	GGIO3.ST.UIntIn10.stVal
186	GGIO3.ST.UIntIn11.q
187	GGIO3.ST.UIntIn11.stVal
188	GGIO3.ST.UIntIn12.q
189	GGIO3.ST.UIntIn12.stVal
190	GGIO3.ST.UIntIn13.q
191	GGIO3.ST.UIntIn13.stVal
192	GGIO3.ST.UIntIn14.q
193	GGIO3.ST.UIntIn14.stVal
194	GGIO3.ST.UIntIn15.q
195	GGIO3.ST.UIntIn15.stVal
196	GGIO3.ST.UIntIn16.q
197	GGIO3.ST.UIntIn16.stVal

F237
ENUMERATION: REAL TIME CLOCK MONTH (FOR EXAMPLE, DAYLIGHT SAVINGS TIME)

Value	Month
0	January
1	February
2	March
3	April
4	May
5	June
6	July
7	August
8	September
9	October
10	November
11	December

F238
ENUMERATION: REAL TIME CLOCK DAY (FOR EXAMPLE, DAYLIGHT SAVINGS TIME)

Value	Day
0	Sunday
1	Monday
2	Tuesday
3	Wednesday
4	Thursday
5	Friday
6	Saturday

F239
ENUMERATION: REAL TIME CLOCK DAYLIGHT SAVINGS TIME START DAY INSTANCE

Value	Instance
0	First
1	Second
2	Third
3	Fourth
4	Last

F240
ENUMERATION: V/Hz CURVES

0 = Definite Time, 1 = Inverse A, 2 = Inverse B, 3 = Inverse C, 4 = FlexCurve A, 5 = FlexCurve B, 6 = FlexCurve C, 7 = FlexCurve D

F243
ENUMERATION: FIELD UNIT TYPE

0 = CC-05, 1 = CV-05, 2 = CC-01, 3 = CV-01

F244
ENUMERATION: FIELD UNIT PROCESS CARD PORT

0 = H4a, 1 = H4b, 2 = H3a, 3 = H3b, 4 = H2a, 5 = H2b, 6 = H1a, 7 = H1b

F245
ENUMERATION: TEST MODE FUNCTION

Value	Instance
0	Disabled
1	Isolated
2	Forcible

F246
ENUMERATION: BRICK TRANSDUCER RANGE

Value	Description
0	-5...5V
1	-1...1mA
2	0...1mA
3	0...-1mA
4	0...5mA
5	0...10mA
6	0...20mA
7	4...20mA
8	potentiometer
9	tap position

F247
ENUMERATION: BRICK AC BANK ORIGIN

Value	Description
0	None
1	U1/AC1..3
2	U1/AC5..7
3	U2/AC1..3
4	U2/AC5..7
5	U3/AC1..3
6	U3/AC5..7
7	U4/AC1..3
8	U4/AC5..7
9	U5/AC1..3
10	U5/AC5..7
11	U6/AC1..3
12	U6/AC5..7
13	U7/AC1..3
14	U7/AC5..7
15	U8/AC1..3
16	U8/AC5..7

F248
ENUMERATION: BRICK AUX BANK ORIGIN

Value	Description
0	None
1	U1/AC4
2	U1/AC8
3	U2/AC4
4	U2/AC8
5	U3/AC4
6	U3/AC8
7	U4/AC4
8	U4/AC8
9	U5/AC4
10	U5/AC8
11	U6/AC4
12	U6/AC8
13	U7/AC5
14	U7/AC8
15	U8/AC5
16	U8/AC8

F253
ENUMERATION: BRICK TRANSDUCER ORIGIN

Value	Description
0	None
1	U1/DC1
2	U1/DC2
3	U1/DC3
4	U2/DC1
5	U2/DC2
6	U2/DC3
...	...
24	U8/DC3

F256
ENUMERATION: BRICK ORIGIN/DESTINATION

Value	Description
0	None
1	U1
2	U2
3	U3
4	U4
5	U5
6	U6
7	U7
8	U8

F259
ENUMERATION: BRICK RTD TYPE

0 = 100 Ohm Nickel, 1 = 120 Ohm Nickel, 2 = 100 Ohm Platinum

F260
ENUMERATION: DATA LOGGER MODE

0 = Continuous, 1 = Trigger

F261
ENUMERATION: BANK REDUNDANCY TYPE

0 = None, 1 = Dependability Biased, 2 = Security Biased

F262
ENUMERATION: BRICK STATUS

0 = Disabled, 1 = OK, 2 = Communications Trouble, 3 = Equipment Mismatch, 4 = Brick Trouble

F300
UR_UINT32: FLEXLOGIC BASE TYPE (15-bit type)

The FlexLogic BASE type is 7 bits and is combined with a 8-bit descriptor and 1 bit for the protection element to form a 16-bit value. The combined bits are of the form: PTTTTTTTDDDDDDDD, where P bit if set indicates that the FlexLogic type is associated with a protection element state and D represents bits for the type in F124 format. If P bit is not set, then the T represents bits for the type and D represents range.

The values in square brackets indicate the base type with P prefix [PTTTTTTT] and the values in round brackets indicate the descriptor range. The left-most D bit indicates whether the type is an ON or OFF type. There can be a total 64 type elements. There can be a total of 256 descriptors of each type.

[0] Off (0) – This is boolean FALSE value

[1] On (1) – This is boolean TRUE value
[2] CONTACT INPUTS (1 to 96)
[3] CONTACT INPUTS OFF (1 to 96)
[4] VIRTUAL INPUTS (1 to 32)
[6] VIRTUAL OUTPUTS (1 to 64)
[8] CONTACT OUTPUTS
[10] CONTACT OUTPUTS VOLTAGE DETECTED (1 to 64)
[11] CONTACT OUTPUTS VOLTAGE OFF DETECTED (1 to 64)
[12] CONTACT OUTPUTS CURRENT DETECTED (1 to 64)
[13] CONTACT OUTPUTS CURRENT OFF DETECTED (1 to 64)
[14] REMOTE INPUTS (1 to 32)
[16] DIRECT INPUTS (1 to 96
[18] REMOTE OUTPUT DNA BIT PAIRS (1 to 32)
[20] REMOTE OUTPUT UserSt BIT PAIRS (1 to 32)
[22] REMOTE DEVICE ONLINE (1 to 16)
[24] MISCELLANEOUS EQUATION
[26] TELEPROTECTION INPUTS
[28] INSERT (via keypad only)
[30] DELETE (via keypad only)
[32] END
[34] NOT (1 INPUT)
[36] 2 INPUT XOR (0)
[38] LATCH SET/RESET (2 inputs)
[40] OR (2 to 16 inputs)
[42] AND (2 to 16 inputs)
[44] NOR (2 to 16 inputs)
[46] NAND (2 to 16 inputs)
[48] TIMER (1 to 32)
[50] ASSIGN VIRTUAL OUTPUT (1 to 64)
[52] ONE SHOT
[54] SELF-TEST ERROR (see F141 for range)
[56] PLATFORM DIRECT INPUT (1 to 96)
[58] PLATFORM DIRECT OUTPUT (1 to 96)
[60] PLATFORM DIRECT DEVICE (1 to 8)
[62] MISCELLANEOUS EVENTS (see F146 for range)
[64] PDC NETWORK CONTROL
[66] PMU RECORDER OUT OF MEMORY
[68] PMU RECORDER STOPPED
[128 to 255] ELEMENT STATES (see the Element States section in the Modbus memory map)

F400
UR_UINT16: CT/VT BANK SELECTION

Bitmask	Bank selection
0	Card 1 Contact 1 to 4
1	Card 1 Contact 5 to 8
2	Card 2 Contact 1 to 4
3	Card 2 Contact 5 to 8
4	Card 3 Contact 1 to 4
5	Card 3 Contact 5 to 8

F491
ENUMERATION: ANALOG INPUT MODE

0 = Default Value, 1 = Last Known

F500
UR_UINT16: PACKED BITFIELD

First register indicates input/output state with bits 0 (MSB) to 15 (LSB) corresponding to input/output state 1 to 16. The second register indicates input/output state with bits 0 to 15 corresponding to input/output state 17 to 32 (if required). The third register indicates input/output state with bits 0 to 15 corresponding to input/output state 33 to 48 (if required). The fourth register indicates input/output state with bits 0 to 15 corresponding to input/output state 49 to 64 (if required).

The number of registers required is determined by the specific data item. A bit value of 0 = Off and 1 = On.

F501
UR_UINT16: LED STATUS

Low byte of register indicates LED status with bit 0 representing the top LED and bit 7 the bottom LED. A bit value of 1 indicates the LED is on, 0 indicates the LED is off.

0 = Off, 1 = On

F502
BITFIELD: ELEMENT OPERATE STATES

Each bit contains the operate state for an element. See the F124 format code for a list of element IDs. The operate bit for element ID X is bit [X mod 16] in register [X/16].

F513
ENUMERATION: POWER SWING MODE

0 = Two Step, 1 = Three Step

F514
ENUMERATION: POWER SWING TRIP MODE

0 = Delayed, 1 = Early

F515
ENUMERATION ELEMENT INPUT MODE

0 = Signed, 1 = Absolute

F516
ENUMERATION ELEMENT COMPARE MODE

0 = Level, 1 = Delta

F517
ENUMERATION: ELEMENT DIRECTION OPERATION

0 = Over, 1 = Under

F518
ENUMERATION: FLEXELEMENT UNITS

0 = Milliseconds, 1 = Seconds, 2 = Minutes

F519
ENUMERATION: NON-VOLATILE LATCH

0 = Reset-Dominant, 1 = Set-Dominant

F522
ENUMERATION: TRANSDUCER DCmA OUTPUT RANGE

0 = –1 to 1 mA, 1 = 0 to 1 mA, 2 = 4 to 20 mA

F523
ENUMERATION: DNP OBJECTS 20, 22, AND 23 DEFAULT VARIATION

Bitmask	Default variation
0	1
1	2
2	5
3	6

F524
ENUMERATION: DNP OBJECT 21 DEFAULT VARIATION

Bitmask	Default variation
0	1
1	2
2	9
3	10

F525
ENUMERATION: DNP OBJECT 32 DEFAULT VARIATION

Bitmask	Default variation
0	1
1	2
2	3
3	4
4	5
5	7

F530
ENUMERATION: FRONT PANEL INTERFACE KEYPRESS

Value	Keypress
0	None
1	Menu
2	Message Up
3	7
4	8
5	9
6	Help
7	Message Left
8	4
9	5
10	6
11	Escape
12	Message Right
13	1
14	2

Value	Keypress
15	3
16	Enter
17	Message Down
18	0
19	Decimal
20	+/–
21	Value Up
22	Value Down
23	Reset
24	User 1
25	User 2
26	User 3
31	User PB 1
32	User PB 2

Value	Keypress
33	User PB 3
34	User PB 4
35	User PB 5
36	User PB 6
37	User PB 7
38	User PB 8
39	User PB 9
40	User PB 10
41	User PB 11
42	User PB 12
44	User 4
45	User 5
46	User 6
47	User 7

F531
ENUMERATION: LANGUAGE

0 = English, 1 = French, 2 = Chinese, 3 = Russian, 4 = Turkish, 5 = German

F542
ENUMERATION: PMU TRIGGERING MODE

0 = Automatic Overwrite, 1 = Protected

F543
ENUMERATION: PMU PHASORS

Value	Phasor
0	Off
1	Va
2	Vb
3	Vc
4	Vx
5	Ia
6	Ib
7	Ic

Value	Phasor
8	Ig
9	V1
10	V2
11	V0
12	I1
13	I2
14	I0

F544
ENUMERATION: PMU RECORDING/REPORTING RATE

Value	Rate
0	1/second
1	2/second
2	4/second
3	5/second
4	10/second
5	12/second

Value	Rate
7	20second
8	25/second
9	30/second
10	50/second
11	60/second
12	100/second

Value	Rate
6	15/second

Value	Rate
13	120/second

F546
ENUMERATION: PMU REPORTING STYLE

0 = Polar, 1 = Rectangular

F547
ENUMERATION: PMU REPORTING FORMAT

0 = Integer, 1 = Floating

F548
ENUMERATION: PMU COM PROTOCOL

0 = NONE, 1 = 37.118, 2 = 61850-90-5

F549
ENUMERATION: PMU PERFORMANCE CLASS

0 = None, 1 = M-CLASS, 2 = P-CLASS

F550
ENUMERATION: RTD INPUT APPLICATION

Enumeration	RTD input application
0	None
1	Stator
2	Bearing
3	Ambient
4	Group 1
5	Group 2

F551
ENUMERATION: RTD TRIP VOTING

Enumeration	RTD trip voting
0	None
1	Group
2	RTD Input 1
3	RTD Input 2
4	RTD Input 3
5	RTD Input 4
6	RTD Input 5
7	RTD Input 6
8	RTD Input 7
9	RTD Input 8
10	RTD Input 9
11	RTD Input 10
12	RTD Input 11
13	RTD Input 12

F552
ENUMERATION: RTD INPUT OPEN

Enumeration	RTD open
0	None
1	Alarm
2	Block

F563
ENUMERATION: DSCP TYPE

Enumeration	DSCP type
0	None
1	Expedited Forwarding

F600
UR_UINT16: FLEXANALOG PARAMETER

Corresponds to the Modbus address of the value used when this parameter is selected. Only certain values can be used as FlexAnalogs (basically all metering quantities used in protection).

F601
ENUMERATION: COM2 PORT USAGE

Enumeration	COM2 port usage
0	RS485
1	RRTD
2	GPM-F
3	RRTD and GPM-F

F602
ENUMERATION: RRTD BAUD RATE

Enumeration	RRTD baud rate
0	1200 bps
1	2400 bps
2	4800 bps
3	9600 bps
4	19200 bps

F603
ENUMERATION: RRTD TRIP VOTING

Enumeration	RRTD trip voting
0	None
1	Group
2	Remote RTD 1
3	Remote RTD 2
4	Remote RTD 3
5	Remote RTD 4
6	Remote RTD 5
7	Remote RTD 6
8	Remote RTD 7
9	Remote RTD 8

Enumeration	RRTD trip voting
10	Remote RTD 9
11	Remote RTD 10
12	Remote RTD 11
13	Remote RTD 12

F605
ENUMERATION: REMOTE DOUBLE-POINT STATUS INPUT STATUS

Enumeration	Remote DPS input status
0	Intermediate
1	Off
2	On
3	Bad

F606
ENUMERATION: REMOTE DOUBLE-POINT STATUS INPUT

Enumeration	Remote double-point status input
0	None
1	Remote input 1
2	Remote input 2
3	Remote input 3
↓	↓
64	Remote input 64

F611
ENUMERATION: GOOSE RETRANSMISSION CURVE

Enumeration	Configurable GOOSE retransmission scheme
0	Heartbeat
1	Aggressive
2	Medium
3	Relaxed

F612
UR_UINT16: FLEXINTEGER PARAMETER

This 16-bit value corresponds to the Modbus address of the selected FlexInteger parameter. Only certain values can be used as FlexIntegers. There is no operation executed even though they are called FlexIntegers.

F613
ENUMERATION: FIELD GROUND MODULE INJECTION CONNECTION TYPE

Enumeration	Connection type
0	Single point
1	Double point

F615
ENUMERATION: IEC 61850 REPORT DATASET ITEMS

Enumeration	IEC 61850 report dataset items
0	None
1	PDIF1.ST.Str.general
2	PDIF1.ST.Op.general
3	PDIF2.ST.Str.general
4	PDIF2.ST.Op.general
5	PDIF3.ST.Str.general
6	PDIF3.ST.Op.general
7	PDIF4.ST.Str.general
8	PDIF4.ST.Op.general
9	PDIS1.ST.Str.general
10	PDIS1.ST.Op.general
11	PDIS2.ST.Str.general
12	PDIS2.ST.Op.general
13	PDIS3.ST.Str.general
14	PDIS3.ST.Op.general
15	PDIS4.ST.Str.general
16	PDIS4.ST.Op.general
17	PDIS5.ST.Str.general
18	PDIS5.ST.Op.general
19	PDIS6.ST.Str.general
20	PDIS6.ST.Op.general
21	PDIS7.ST.Str.general
22	PDIS7.ST.Op.general
23	PDIS8.ST.Str.general
24	PDIS8.ST.Op.general
25	PDIS9.ST.Str.general
26	PDIS9.ST.Op.general
27	PDIS10.ST.Str.general
28	PDIS10.ST.Op.general
29	PIOC1.ST.Str.general
30	PIOC1.ST.Op.general
31	PIOC2.ST.Str.general
32	PIOC2.ST.Op.general
33	PIOC3.ST.Str.general
34	PIOC3.ST.Op.general
35	PIOC4.ST.Str.general
36	PIOC4.ST.Op.general
37	PIOC5.ST.Str.general
38	PIOC5.ST.Op.general
39	PIOC6.ST.Str.general
40	PIOC6.ST.Op.general
41	PIOC7.ST.Str.general
42	PIOC7.ST.Op.general
43	PIOC8.ST.Str.general
44	PIOC8.ST.Op.general
45	PIOC9.ST.Str.general
46	PIOC9.ST.Op.general
47	PIOC10.ST.Str.general
48	PIOC10.ST.Op.general

Enumeration	IEC 61850 report dataset items
49	PIOC11.ST.Str.general
50	PIOC11.ST.Op.general
51	PIOC12.ST.Str.general
52	PIOC12.ST.Op.general
53	PIOC13.ST.Str.general
54	PIOC13.ST.Op.general
55	PIOC14.ST.Str.general
56	PIOC14.ST.Op.general
57	PIOC15.ST.Str.general
58	PIOC15.ST.Op.general
59	PIOC16.ST.Str.general
60	PIOC16.ST.Op.general
61	PIOC17.ST.Str.general
62	PIOC17.ST.Op.general
63	PIOC18.ST.Str.general
64	PIOC18.ST.Op.general
65	PIOC19.ST.Str.general
66	PIOC19.ST.Op.general
67	PIOC20.ST.Str.general
68	PIOC20.ST.Op.general
69	PIOC21.ST.Str.general
70	PIOC21.ST.Op.general
71	PIOC22.ST.Str.general
72	PIOC22.ST.Op.general
73	PIOC23.ST.Str.general
74	PIOC23.ST.Op.general
75	PIOC24.ST.Str.general
76	PIOC24.ST.Op.general
77	PIOC25.ST.Str.general
78	PIOC25.ST.Op.general
79	PIOC26.ST.Str.general
80	PIOC26.ST.Op.general
81	PIOC27.ST.Str.general
82	PIOC27.ST.Op.general
83	PIOC28.ST.Str.general
84	PIOC28.ST.Op.general
85	PIOC29.ST.Str.general
86	PIOC29.ST.Op.general
87	PIOC30.ST.Str.general
88	PIOC30.ST.Op.general
89	PIOC31.ST.Str.general
90	PIOC31.ST.Op.general
91	PIOC32.ST.Str.general
92	PIOC32.ST.Op.general
93	PIOC33.ST.Str.general
94	PIOC33.ST.Op.general
95	PIOC34.ST.Str.general
96	PIOC34.ST.Op.general
97	PIOC35.ST.Str.general
98	PIOC35.ST.Op.general
99	PIOC36.ST.Str.general
100	PIOC36.ST.Op.general
101	PIOC37.ST.Str.general

Enumeration	IEC 61850 report dataset items
102	PIOC37.ST.Op.general
103	PIOC38.ST.Str.general
104	PIOC38.ST.Op.general
105	PIOC39.ST.Str.general
106	PIOC39.ST.Op.general
107	PIOC40.ST.Str.general
108	PIOC40.ST.Op.general
109	PIOC41.ST.Str.general
110	PIOC41.ST.Op.general
111	PIOC42.ST.Str.general
112	PIOC42.ST.Op.general
113	PIOC43.ST.Str.general
114	PIOC43.ST.Op.general
115	PIOC44.ST.Str.general
116	PIOC44.ST.Op.general
117	PIOC45.ST.Str.general
118	PIOC45.ST.Op.general
119	PIOC46.ST.Str.general
120	PIOC46.ST.Op.general
121	PIOC47.ST.Str.general
122	PIOC47.ST.Op.general
123	PIOC48.ST.Str.general
124	PIOC48.ST.Op.general
125	PIOC49.ST.Str.general
126	PIOC49.ST.Op.general
127	PIOC50.ST.Str.general
128	PIOC50.ST.Op.general
129	PIOC51.ST.Str.general
130	PIOC51.ST.Op.general
131	PIOC52.ST.Str.general
132	PIOC52.ST.Op.general
133	PIOC53.ST.Str.general
134	PIOC53.ST.Op.general
135	PIOC54.ST.Str.general
136	PIOC54.ST.Op.general
137	PIOC55.ST.Str.general
138	PIOC55.ST.Op.general
139	PIOC56.ST.Str.general
140	PIOC56.ST.Op.general
141	PIOC57.ST.Str.general
142	PIOC57.ST.Op.general
143	PIOC58.ST.Str.general
144	PIOC58.ST.Op.general
145	PIOC59.ST.Str.general
146	PIOC59.ST.Op.general
147	PIOC60.ST.Str.general
148	PIOC60.ST.Op.general
149	PIOC61.ST.Str.general
150	PIOC61.ST.Op.general
151	PIOC62.ST.Str.general
152	PIOC62.ST.Op.general
153	PIOC63.ST.Str.general
154	PIOC63.ST.Op.general

Enumeration	IEC 61850 report dataset items
155	PIOC64.ST.Str.general
156	PIOC64.ST.Op.general
157	PIOC65.ST.Str.general
158	PIOC65.ST.Op.general
159	PIOC66.ST.Str.general
160	PIOC66.ST.Op.general
161	PIOC67.ST.Str.general
162	PIOC67.ST.Op.general
163	PIOC68.ST.Str.general
164	PIOC68.ST.Op.general
165	PIOC69.ST.Str.general
166	PIOC69.ST.Op.general
167	PIOC70.ST.Str.general
168	PIOC70.ST.Op.general
169	PIOC71.ST.Str.general
170	PIOC71.ST.Op.general
171	PIOC72.ST.Str.general
172	PIOC72.ST.Op.general
173	PTOC1.ST.Str.general
174	PTOC1.ST.Op.general
175	PTOC2.ST.Str.general
176	PTOC2.ST.Op.general
177	PTOC3.ST.Str.general
178	PTOC3.ST.Op.general
179	PTOC4.ST.Str.general
180	PTOC4.ST.Op.general
181	PTOC5.ST.Str.general
182	PTOC5.ST.Op.general
183	PTOC6.ST.Str.general
184	PTOC6.ST.Op.general
185	PTOC7.ST.Str.general
186	PTOC7.ST.Op.general
187	PTOC8.ST.Str.general
188	PTOC8.ST.Op.general
189	PTOC9.ST.Str.general
190	PTOC9.ST.Op.general
191	PTOC10.ST.Str.general
192	PTOC10.ST.Op.general
193	PTOC11.ST.Str.general
194	PTOC11.ST.Op.general
195	PTOC12.ST.Str.general
196	PTOC12.ST.Op.general
197	PTOC13.ST.Str.general
198	PTOC13.ST.Op.general
199	PTOC14.ST.Str.general
200	PTOC14.ST.Op.general
201	PTOC15.ST.Str.general
202	PTOC15.ST.Op.general
203	PTOC16.ST.Str.general
204	PTOC16.ST.Op.general
205	PTOC17.ST.Str.general
206	PTOC17.ST.Op.general
207	PTOC18.ST.Str.general

Enumeration	IEC 61850 report dataset items
208	PTOC18.ST.Op.general
209	PTOC19.ST.Str.general
210	PTOC19.ST.Op.general
211	PTOC20.ST.Str.general
212	PTOC20.ST.Op.general
213	PTOC21.ST.Str.general
214	PTOC21.ST.Op.general
215	PTOC22.ST.Str.general
216	PTOC22.ST.Op.general
217	PTOC23.ST.Str.general
218	PTOC23.ST.Op.general
219	PTOC24.ST.Str.general
220	PTOC24.ST.Op.general
221	PTOV1.ST.Str.general
222	PTOV1.ST.Op.general
223	PTOV2.ST.Str.general
224	PTOV2.ST.Op.general
225	PTOV3.ST.Str.general
226	PTOV3.ST.Op.general
227	PTOV4.ST.Str.general
228	PTOV4.ST.Op.general
229	PTOV5.ST.Str.general
230	PTOV5.ST.Op.general
231	PTOV6.ST.Str.general
232	PTOV6.ST.Op.general
233	PTOV7.ST.Str.general
234	PTOV7.ST.Op.general
235	PTOV8.ST.Str.general
236	PTOV8.ST.Op.general
237	PTOV9.ST.Str.general
238	PTOV9.ST.Op.general
239	PTOV10.ST.Str.general
240	PTOV10.ST.Op.general
241	PTRC1.ST.Tr.general
242	PTRC1.ST.Op.general
243	PTRC2.ST.Tr.general
244	PTRC2.ST.Op.general
245	PTRC3.ST.Tr.general
246	PTRC3.ST.Op.general
247	PTRC4.ST.Tr.general
248	PTRC4.ST.Op.general
249	PTRC5.ST.Tr.general
250	PTRC5.ST.Op.general
251	PTRC6.ST.Tr.general
252	PTRC6.ST.Op.general
253	PTUV1.ST.Str.general
254	PTUV1.ST.Op.general
255	PTUV2.ST.Str.general
256	PTUV2.ST.Op.general
257	PTUV3.ST.Str.general
258	PTUV3.ST.Op.general
259	PTUV4.ST.Str.general
260	PTUV4.ST.Op.general

Enumeration	IEC 61850 report dataset items
261	PTUV5.ST.Str.general
262	PTUV5.ST.Op.general
263	PTUV6.ST.Str.general
264	PTUV6.ST.Op.general
265	PTUV7.ST.Str.general
266	PTUV7.ST.Op.general
267	PTUV8.ST.Str.general
268	PTUV8.ST.Op.general
269	PTUV9.ST.Str.general
270	PTUV9.ST.Op.general
271	PTUV10.ST.Str.general
272	PTUV10.ST.Op.general
273	PTUV11.ST.Str.general
274	PTUV11.ST.Op.general
275	PTUV12.ST.Str.general
276	PTUV12.ST.Op.general
277	PTUV13.ST.Str.general
278	PTUV13.ST.Op.general
279	RBRF1.ST.OpEx.general
280	RBRF1.ST.OpIn.general
281	RBRF2.ST.OpEx.general
282	RBRF2.ST.OpIn.general
283	RBRF3.ST.OpEx.general
284	RBRF3.ST.OpIn.general
285	RBRF4.ST.OpEx.general
286	RBRF4.ST.OpIn.general
287	RBRF5.ST.OpEx.general
288	RBRF5.ST.OpIn.general
289	RBRF6.ST.OpEx.general
290	RBRF6.ST.OpIn.general
291	RBRF7.ST.OpEx.general
292	RBRF7.ST.OpIn.general
293	RBRF8.ST.OpEx.general
294	RBRF8.ST.OpIn.general
295	RBRF9.ST.OpEx.general
296	RBRF9.ST.OpIn.general
297	RBRF10.ST.OpEx.general
298	RBRF10.ST.OpIn.general
299	RBRF11.ST.OpEx.general
300	RBRF11.ST.OpIn.general
301	RBRF12.ST.OpEx.general
302	RBRF12.ST.OpIn.general
303	RBRF13.ST.OpEx.general
304	RBRF13.ST.OpIn.general
305	RBRF14.ST.OpEx.general
306	RBRF14.ST.OpIn.general
307	RBRF15.ST.OpEx.general
308	RBRF15.ST.OpIn.general
309	RBRF16.ST.OpEx.general
310	RBRF16.ST.OpIn.general
311	RBRF17.ST.OpEx.general
312	RBRF17.ST.OpIn.general
313	RBRF18.ST.OpEx.general

Enumeration	IEC 61850 report dataset items
314	RBRF18.ST.OpIn.general
315	RBRF19.ST.OpEx.general
316	RBRF19.ST.OpIn.general
317	RBRF20.ST.OpEx.general
318	RBRF20.ST.OpIn.general
319	RBRF21.ST.OpEx.general
320	RBRF21.ST.OpIn.general
321	RBRF22.ST.OpEx.general
322	RBRF22.ST.OpIn.general
323	RBRF23.ST.OpEx.general
324	RBRF23.ST.OpIn.general
325	RBRF24.ST.OpEx.general
326	RBRF24.ST.OpIn.general
327	RFLO1.MX.FltDiskm.mag.f
328	RFLO2.MX.FltDiskm.mag.f
329	RFLO3.MX.FltDiskm.mag.f
330	RFLO4.MX.FltDiskm.mag.f
331	RFLO5.MX.FltDiskm.mag.f
332	RPSB1.ST.Str.general
333	RPSB1.ST.Op.general
334	RPSB1.ST.BlkZn.stVal
335	RREC1.ST.Op.general
336	RREC1.ST.AutoRecSt.stVal
337	RREC2.ST.Op.general
338	RREC2.ST.AutoRecSt.stVal
339	RREC3.ST.Op.general
340	RREC3.ST.AutoRecSt.stVal
341	RREC4.ST.Op.general
342	RREC4.ST.AutoRecSt.stVal
343	RREC5.ST.Op.general
344	RREC5.ST.AutoRecSt.stVal
345	RREC6.ST.Op.general
346	RREC6.ST.AutoRecSt.stVal
347	CSWI1.ST.Loc.stVal
348	CSWI1.ST.Pos.stVal
349	CSWI2.ST.Loc.stVal
350	CSWI2.ST.Pos.stVal
351	CSWI3.ST.Loc.stVal
352	CSWI3.ST.Pos.stVal
353	CSWI4.ST.Loc.stVal
354	CSWI4.ST.Pos.stVal
355	CSWI5.ST.Loc.stVal
356	CSWI5.ST.Pos.stVal
357	CSWI6.ST.Loc.stVal
358	CSWI6.ST.Pos.stVal
359	CSWI7.ST.Loc.stVal
360	CSWI7.ST.Pos.stVal
361	CSWI8.ST.Loc.stVal
362	CSWI8.ST.Pos.stVal
363	CSWI9.ST.Loc.stVal
364	CSWI9.ST.Pos.stVal
365	CSWI10.ST.Loc.stVal
366	CSWI10.ST.Pos.stVal

Enumeration	IEC 61850 report dataset items
367	CSWI11.ST.Loc.stVal
368	CSWI11.ST.Pos.stVal
369	CSWI12.ST.Loc.stVal
370	CSWI12.ST.Pos.stVal
371	CSWI13.ST.Loc.stVal
372	CSWI13.ST.Pos.stVal
373	CSWI14.ST.Loc.stVal
374	CSWI14.ST.Pos.stVal
375	CSWI15.ST.Loc.stVal
376	CSWI15.ST.Pos.stVal
377	CSWI16.ST.Loc.stVal
378	CSWI16.ST.Pos.stVal
379	CSWI17.ST.Loc.stVal
380	CSWI17.ST.Pos.stVal
381	CSWI18.ST.Loc.stVal
382	CSWI18.ST.Pos.stVal
383	CSWI19.ST.Loc.stVal
384	CSWI19.ST.Pos.stVal
385	CSWI20.ST.Loc.stVal
386	CSWI20.ST.Pos.stVal
387	CSWI21.ST.Loc.stVal
388	CSWI21.ST.Pos.stVal
389	CSWI22.ST.Loc.stVal
390	CSWI22.ST.Pos.stVal
391	CSWI23.ST.Loc.stVal
392	CSWI23.ST.Pos.stVal
393	CSWI24.ST.Loc.stVal
394	CSWI24.ST.Pos.stVal
395	CSWI25.ST.Loc.stVal
396	CSWI25.ST.Pos.stVal
397	CSWI26.ST.Loc.stVal
398	CSWI26.ST.Pos.stVal
399	CSWI27.ST.Loc.stVal
400	CSWI27.ST.Pos.stVal
401	CSWI28.ST.Loc.stVal
402	CSWI28.ST.Pos.stVal
403	CSWI29.ST.Loc.stVal
404	CSWI29.ST.Pos.stVal
405	CSWI30.ST.Loc.stVal
406	CSWI30.ST.Pos.stVal
407	GGIO1.ST.Ind1.stVal
408	GGIO1.ST.Ind2.stVal
409	GGIO1.ST.Ind3.stVal
410	GGIO1.ST.Ind4.stVal
411	GGIO1.ST.Ind5.stVal
412	GGIO1.ST.Ind6.stVal
413	GGIO1.ST.Ind7.stVal
414	GGIO1.ST.Ind8.stVal
415	GGIO1.ST.Ind9.stVal
416	GGIO1.ST.Ind10.stVal
417	GGIO1.ST.Ind11.stVal
418	GGIO1.ST.Ind12.stVal
419	GGIO1.ST.Ind13.stVal

Enumeration	IEC 61850 report dataset items
420	GGIO1.ST.Ind14.stVal
421	GGIO1.ST.Ind15.stVal
422	GGIO1.ST.Ind16.stVal
423	GGIO1.ST.Ind17.stVal
424	GGIO1.ST.Ind18.stVal
425	GGIO1.ST.Ind19.stVal
426	GGIO1.ST.Ind20.stVal
427	GGIO1.ST.Ind21.stVal
428	GGIO1.ST.Ind22.stVal
429	GGIO1.ST.Ind23.stVal
430	GGIO1.ST.Ind24.stVal
431	GGIO1.ST.Ind25.stVal
432	GGIO1.ST.Ind26.stVal
433	GGIO1.ST.Ind27.stVal
434	GGIO1.ST.Ind28.stVal
435	GGIO1.ST.Ind29.stVal
436	GGIO1.ST.Ind30.stVal
437	GGIO1.ST.Ind31.stVal
438	GGIO1.ST.Ind32.stVal
439	GGIO1.ST.Ind33.stVal
440	GGIO1.ST.Ind34.stVal
441	GGIO1.ST.Ind35.stVal
442	GGIO1.ST.Ind36.stVal
443	GGIO1.ST.Ind37.stVal
444	GGIO1.ST.Ind38.stVal
445	GGIO1.ST.Ind39.stVal
446	GGIO1.ST.Ind40.stVal
447	GGIO1.ST.Ind41.stVal
448	GGIO1.ST.Ind42.stVal
449	GGIO1.ST.Ind43.stVal
450	GGIO1.ST.Ind44.stVal
451	GGIO1.ST.Ind45.stVal
452	GGIO1.ST.Ind46.stVal
453	GGIO1.ST.Ind47.stVal
454	GGIO1.ST.Ind48.stVal
455	GGIO1.ST.Ind49.stVal
456	GGIO1.ST.Ind50.stVal
457	GGIO1.ST.Ind51.stVal
458	GGIO1.ST.Ind52.stVal
459	GGIO1.ST.Ind53.stVal
460	GGIO1.ST.Ind54.stVal
461	GGIO1.ST.Ind55.stVal
462	GGIO1.ST.Ind56.stVal
463	GGIO1.ST.Ind57.stVal
464	GGIO1.ST.Ind58.stVal
465	GGIO1.ST.Ind59.stVal
466	GGIO1.ST.Ind60.stVal
467	GGIO1.ST.Ind61.stVal
468	GGIO1.ST.Ind62.stVal
469	GGIO1.ST.Ind63.stVal
470	GGIO1.ST.Ind64.stVal
471	GGIO1.ST.Ind65.stVal
472	GGIO1.ST.Ind66.stVal

Enumeration	IEC 61850 report dataset items
473	GGIO1.ST.Ind67.stVal
474	GGIO1.ST.Ind68.stVal
475	GGIO1.ST.Ind69.stVal
476	GGIO1.ST.Ind70.stVal
477	GGIO1.ST.Ind71.stVal
478	GGIO1.ST.Ind72.stVal
479	GGIO1.ST.Ind73.stVal
480	GGIO1.ST.Ind74.stVal
481	GGIO1.ST.Ind75.stVal
482	GGIO1.ST.Ind76.stVal
483	GGIO1.ST.Ind77.stVal
484	GGIO1.ST.Ind78.stVal
485	GGIO1.ST.Ind79.stVal
486	GGIO1.ST.Ind80.stVal
487	GGIO1.ST.Ind81.stVal
488	GGIO1.ST.Ind82.stVal
489	GGIO1.ST.Ind83.stVal
490	GGIO1.ST.Ind84.stVal
491	GGIO1.ST.Ind85.stVal
492	GGIO1.ST.Ind86.stVal
493	GGIO1.ST.Ind87.stVal
494	GGIO1.ST.Ind88.stVal
495	GGIO1.ST.Ind89.stVal
496	GGIO1.ST.Ind90.stVal
497	GGIO1.ST.Ind91.stVal
498	GGIO1.ST.Ind92.stVal
499	GGIO1.ST.Ind93.stVal
500	GGIO1.ST.Ind94.stVal
501	GGIO1.ST.Ind95.stVal
502	GGIO1.ST.Ind96.stVal
503	GGIO1.ST.Ind97.stVal
504	GGIO1.ST.Ind98.stVal
505	GGIO1.ST.Ind99.stVal
506	GGIO1.ST.Ind100.stVal
507	GGIO1.ST.Ind101.stVal
508	GGIO1.ST.Ind102.stVal
509	GGIO1.ST.Ind103.stVal
510	GGIO1.ST.Ind104.stVal
511	GGIO1.ST.Ind105.stVal
512	GGIO1.ST.Ind106.stVal
513	GGIO1.ST.Ind107.stVal
514	GGIO1.ST.Ind108.stVal
515	GGIO1.ST.Ind109.stVal
516	GGIO1.ST.Ind110.stVal
517	GGIO1.ST.Ind111.stVal
518	GGIO1.ST.Ind112.stVal
519	GGIO1.ST.Ind113.stVal
520	GGIO1.ST.Ind114.stVal
521	GGIO1.ST.Ind115.stVal
522	GGIO1.ST.Ind116.stVal
523	GGIO1.ST.Ind117.stVal
524	GGIO1.ST.Ind118.stVal
525	GGIO1.ST.Ind119.stVal

Enumeration	IEC 61850 report dataset items
526	GGIO1.ST.Ind120.stVal
527	GGIO1.ST.Ind121.stVal
528	GGIO1.ST.Ind122.stVal
529	GGIO1.ST.Ind123.stVal
530	GGIO1.ST.Ind124.stVal
531	GGIO1.ST.Ind125.stVal
532	GGIO1.ST.Ind126.stVal
533	GGIO1.ST.Ind127.stVal
534	GGIO1.ST.Ind128.stVal
535	MMXU1.MX.TotW.mag.f
536	MMXU1.MX.TotVAr.mag.f
537	MMXU1.MX.TotVA.mag.f
538	MMXU1.MX.TotPF.mag.f
539	MMXU1.MX.Hz.mag.f
540	MMXU1.MX.PPV.phsAB.cVal.mag.f
541	MMXU1.MX.PPV.phsAB.cVal.ang.f
542	MMXU1.MX.PPV.phsBC.cVal.mag.f
543	MMXU1.MX.PPV.phsBC.cVal.ang.f
544	MMXU1.MX.PPV.phsCA.cVal.mag.f
545	MMXU1.MX.PPV.phsCA.cVal.ang.f
546	MMXU1.MX.PhV.phsA.cVal.mag.f
547	MMXU1.MX.PhV.phsA.cVal.ang.f
548	MMXU1.MX.PhV.phsB.cVal.mag.f
549	MMXU1.MX.PhV.phsB.cVal.ang.f
550	MMXU1.MX.PhV.phsC.cVal.mag.f
551	MMXU1.MX.PhV.phsC.cVal.ang.f
552	MMXU1.MX.A.phsA.cVal.mag.f
553	MMXU1.MX.A.phsA.cVal.ang.f
554	MMXU1.MX.A.phsB.cVal.mag.f
555	MMXU1.MX.A.phsB.cVal.ang.f
556	MMXU1.MX.A.phsC.cVal.mag.f
557	MMXU1.MX.A.phsC.cVal.ang.f
558	MMXU1.MX.A.neut.cVal.mag.f
559	MMXU1.MX.A.neut.cVal.ang.f
560	MMXU1.MX.W.phsA.cVal.mag.f
561	MMXU1.MX.W.phsB.cVal.mag.f
562	MMXU1.MX.W.phsC.cVal.mag.f
563	MMXU1.MX.VAr.phsA.cVal.mag.f
564	MMXU1.MX.VAr.phsB.cVal.mag.f
565	MMXU1.MX.VAr.phsC.cVal.mag.f
566	MMXU1.MX.VA.phsA.cVal.mag.f
567	MMXU1.MX.VA.phsB.cVal.mag.f
568	MMXU1.MX.VA.phsC.cVal.mag.f
569	MMXU1.MX.PF.phsA.cVal.mag.f
570	MMXU1.MX.PF.phsB.cVal.mag.f
571	MMXU1.MX.PF.phsC.cVal.mag.f
572	MMXU2.MX.TotW.mag.f
573	MMXU2.MX.TotVAr.mag.f
574	MMXU2.MX.TotVA.mag.f
575	MMXU2.MX.TotPF.mag.f
576	MMXU2.MX.Hz.mag.f
577	MMXU2.MX.PPV.phsAB.cVal.mag.f
578	MMXU2.MX.PPV.phsAB.cVal.ang.f

Enumeration	IEC 61850 report dataset items
579	MMXU2.MX.PPV.phsBC.cVal.mag.f
580	MMXU2.MX.PPV.phsBC.cVal.ang.f
581	MMXU2.MX.PPV.phsCA.cVal.mag.f
582	MMXU2.MX.PPV.phsCA.cVal.ang.f
583	MMXU2.MX.PhV.phsA.cVal.mag.f
584	MMXU2.MX.PhV.phsA.cVal.ang.f
585	MMXU2.MX.PhV.phsB.cVal.mag.f
586	MMXU2.MX.PhV.phsB.cVal.ang.f
587	MMXU2.MX.PhV.phsC.cVal.mag.f
588	MMXU2.MX.PhV.phsC.cVal.ang.f
589	MMXU2.MX.A.phsA.cVal.mag.f
590	MMXU2.MX.A.phsA.cVal.ang.f
591	MMXU2.MX.A.phsB.cVal.mag.f
592	MMXU2.MX.A.phsB.cVal.ang.f
593	MMXU2.MX.A.phsC.cVal.mag.f
594	MMXU2.MX.A.phsC.cVal.ang.f
595	MMXU2.MX.A.neut.cVal.mag.f
596	MMXU2.MX.A.neut.cVal.ang.f
597	MMXU2.MX.W.phsA.cVal.mag.f
598	MMXU2.MX.W.phsB.cVal.mag.f
599	MMXU2.MX.W.phsC.cVal.mag.f
600	MMXU2.MX.VAr.phsA.cVal.mag.f
601	MMXU2.MX.VAr.phsB.cVal.mag.f
602	MMXU2.MX.VAr.phsC.cVal.mag.f
603	MMXU2.MX.VA.phsA.cVal.mag.f
604	MMXU2.MX.VA.phsB.cVal.mag.f
605	MMXU2.MX.VA.phsC.cVal.mag.f
606	MMXU2.MX.PF.phsA.cVal.mag.f
607	MMXU2.MX.PF.phsB.cVal.mag.f
608	MMXU2.MX.PF.phsC.cVal.mag.f
609	MMXU3.MX.TotW.mag.f
610	MMXU3.MX.TotVAr.mag.f
611	MMXU3.MX.TotVA.mag.f
612	MMXU3.MX.TotPF.mag.f
613	MMXU3.MX.Hz.mag.f
614	MMXU3.MX.PPV.phsAB.cVal.mag.f
615	MMXU3.MX.PPV.phsAB.cVal.ang.f
616	MMXU3.MX.PPV.phsBC.cVal.mag.f
617	MMXU3.MX.PPV.phsBC.cVal.ang.f
618	MMXU3.MX.PPV.phsCA.cVal.mag.f
619	MMXU3.MX.PPV.phsCA.cVal.ang.f
620	MMXU3.MX.PhV.phsA.cVal.mag.f
621	MMXU3.MX.PhV.phsA.cVal.ang.f
622	MMXU3.MX.PhV.phsB.cVal.mag.f
623	MMXU3.MX.PhV.phsB.cVal.ang.f
624	MMXU3.MX.PhV.phsC.cVal.mag.f
625	MMXU3.MX.PhV.phsC.cVal.ang.f
626	MMXU3.MX.A.phsA.cVal.mag.f
627	MMXU3.MX.A.phsA.cVal.ang.f
628	MMXU3.MX.A.phsB.cVal.mag.f
629	MMXU3.MX.A.phsB.cVal.ang.f
630	MMXU3.MX.A.phsC.cVal.mag.f
631	MMXU3.MX.A.phsC.cVal.ang.f

Enumeration	IEC 61850 report dataset items
632	MMXU3.MX.A.neut.cVal.mag.f
633	MMXU3.MX.A.neut.cVal.ang.f
634	MMXU3.MX.W.phsA.cVal.mag.f
635	MMXU3.MX.W.phsB.cVal.mag.f
636	MMXU3.MX.W.phsC.cVal.mag.f
637	MMXU3.MX.VAr.phsA.cVal.mag.f
638	MMXU3.MX.VAr.phsB.cVal.mag.f
639	MMXU3.MX.VAr.phsC.cVal.mag.f
640	MMXU3.MX.VA.phsA.cVal.mag.f
641	MMXU3.MX.VA.phsB.cVal.mag.f
642	MMXU3.MX.VA.phsC.cVal.mag.f
643	MMXU3.MX.PF.phsA.cVal.mag.f
644	MMXU3.MX.PF.phsB.cVal.mag.f
645	MMXU3.MX.PF.phsC.cVal.mag.f
646	MMXU4.MX.TotW.mag.f
647	MMXU4.MX.TotVAr.mag.f
648	MMXU4.MX.TotVA.mag.f
649	MMXU4.MX.TotPF.mag.f
650	MMXU4.MX.Hz.mag.f
651	MMXU4.MX.PPV.phsAB.cVal.mag.f
652	MMXU4.MX.PPV.phsAB.cVal.ang.f
653	MMXU4.MX.PPV.phsBC.cVal.mag.f
654	MMXU4.MX.PPV.phsBC.cVal.ang.f
655	MMXU4.MX.PPV.phsCA.cVal.mag.f
656	MMXU4.MX.PPV.phsCA.cVal.ang.f
657	MMXU4.MX.PhV.phsA.cVal.mag.f
658	MMXU4.MX.PhV.phsA.cVal.ang.f
659	MMXU4.MX.PhV.phsB.cVal.mag.f
660	MMXU4.MX.PhV.phsB.cVal.ang.f
661	MMXU4.MX.PhV.phsC.cVal.mag.f
662	MMXU4.MX.PhV.phsC.cVal.ang.f
663	MMXU4.MX.A.phsA.cVal.mag.f
664	MMXU4.MX.A.phsA.cVal.ang.f
665	MMXU4.MX.A.phsB.cVal.mag.f
666	MMXU4.MX.A.phsB.cVal.ang.f
667	MMXU4.MX.A.phsC.cVal.mag.f
668	MMXU4.MX.A.phsC.cVal.ang.f
669	MMXU4.MX.A.neut.cVal.mag.f
670	MMXU4.MX.A.neut.cVal.ang.f
671	MMXU4.MX.W.phsA.cVal.mag.f
672	MMXU4.MX.W.phsB.cVal.mag.f
673	MMXU4.MX.W.phsC.cVal.mag.f
674	MMXU4.MX.VAr.phsA.cVal.mag.f
675	MMXU4.MX.VAr.phsB.cVal.mag.f
676	MMXU4.MX.VAr.phsC.cVal.mag.f
677	MMXU4.MX.VA.phsA.cVal.mag.f
678	MMXU4.MX.VA.phsB.cVal.mag.f
679	MMXU4.MX.VA.phsC.cVal.mag.f
680	MMXU4.MX.PF.phsA.cVal.mag.f
681	MMXU4.MX.PF.phsB.cVal.mag.f
682	MMXU4.MX.PF.phsC.cVal.mag.f
683	MMXU5.MX.TotW.mag.f
684	MMXU5.MX.TotVAr.mag.f

Enumeration	IEC 61850 report dataset items
685	MMXU5.MX.TotVA.mag.f
686	MMXU5.MX.TotPF.mag.f
687	MMXU5.MX.Hz.mag.f
688	MMXU5.MX.PPV.phsAB.cVal.mag.f
689	MMXU5.MX.PPV.phsAB.cVal.ang.f
690	MMXU5.MX.PPV.phsBC.cVal.mag.f
691	MMXU5.MX.PPV.phsBC.cVal.ang.f
692	MMXU5.MX.PPV.phsCA.cVal.mag.f
693	MMXU5.MX.PPV.phsCA.cVal.ang.f
694	MMXU5.MX.PhV.phsA.cVal.mag.f
695	MMXU5.MX.PhV.phsA.cVal.ang.f
696	MMXU5.MX.PhV.phsB.cVal.mag.f
697	MMXU5.MX.PhV.phsB.cVal.ang.f
698	MMXU5.MX.PhV.phsC.cVal.mag.f
699	MMXU5.MX.PhV.phsC.cVal.ang.f
700	MMXU5.MX.A.phsA.cVal.mag.f
701	MMXU5.MX.A.phsA.cVal.ang.f
702	MMXU5.MX.A.phsB.cVal.mag.f
703	MMXU5.MX.A.phsB.cVal.ang.f
704	MMXU5.MX.A.phsC.cVal.mag.f
705	MMXU5.MX.A.phsC.cVal.ang.f
706	MMXU5.MX.A.neut.cVal.mag.f
707	MMXU5.MX.A.neut.cVal.ang.f
708	MMXU5.MX.W.phsA.cVal.mag.f
709	MMXU5.MX.W.phsB.cVal.mag.f
710	MMXU5.MX.W.phsC.cVal.mag.f
711	MMXU5.MX.VAr.phsA.cVal.mag.f
712	MMXU5.MX.VAr.phsB.cVal.mag.f
713	MMXU5.MX.VAr.phsC.cVal.mag.f
714	MMXU5.MX.VA.phsA.cVal.mag.f
715	MMXU5.MX.VA.phsB.cVal.mag.f
716	MMXU5.MX.VA.phsC.cVal.mag.f
717	MMXU5.MX.PF.phsA.cVal.mag.f
718	MMXU5.MX.PF.phsB.cVal.mag.f
719	MMXU5.MX.PF.phsC.cVal.mag.f
720	MMXU6.MX.TotW.mag.f
721	MMXU6.MX.TotVAr.mag.f
722	MMXU6.MX.TotVA.mag.f
723	MMXU6.MX.TotPF.mag.f
724	MMXU6.MX.Hz.mag.f
725	MMXU6.MX.PPV.phsAB.cVal.mag.f
726	MMXU6.MX.PPV.phsAB.cVal.ang.f
727	MMXU6.MX.PPV.phsBC.cVal.mag.f
728	MMXU6.MX.PPV.phsBC.cVal.ang.f
729	MMXU6.MX.PPV.phsCA.cVal.mag.f
730	MMXU6.MX.PPV.phsCA.cVal.ang.f
731	MMXU6.MX.PhV.phsA.cVal.mag.f
732	MMXU6.MX.PhV.phsA.cVal.ang.f
733	MMXU6.MX.PhV.phsB.cVal.mag.f
734	MMXU6.MX.PhV.phsB.cVal.ang.f
735	MMXU6.MX.PhV.phsC.cVal.mag.f
736	MMXU6.MX.PhV.phsC.cVal.ang.f
737	MMXU6.MX.A.phsA.cVal.mag.f

Enumeration	IEC 61850 report dataset items
738	MMXU6.MX.A.phsA.cVal.ang.f
739	MMXU6.MX.A.phsB.cVal.mag.f
740	MMXU6.MX.A.phsB.cVal.ang.f
741	MMXU6.MX.A.phsC.cVal.mag.f
742	MMXU6.MX.A.phsC.cVal.ang.f
743	MMXU6.MX.A.neut.cVal.mag.f
744	MMXU6.MX.A.neut.cVal.ang.f
745	MMXU6.MX.W.phsA.cVal.mag.f
746	MMXU6.MX.W.phsB.cVal.mag.f
747	MMXU6.MX.W.phsC.cVal.mag.f
748	MMXU6.MX.VAr.phsA.cVal.mag.f
749	MMXU6.MX.VAr.phsB.cVal.mag.f
750	MMXU6.MX.VAr.phsC.cVal.mag.f
751	MMXU6.MX.VA.phsA.cVal.mag.f
752	MMXU6.MX.VA.phsB.cVal.mag.f
753	MMXU6.MX.VA.phsC.cVal.mag.f
754	MMXU6.MX.PF.phsA.cVal.mag.f
755	MMXU6.MX.PF.phsB.cVal.mag.f
756	MMXU6.MX.PF.phsC.cVal.mag.f
757	GGIO4.MX.AnIn1.mag.f
758	GGIO4.MX.AnIn2.mag.f
759	GGIO4.MX.AnIn3.mag.f
760	GGIO4.MX.AnIn4.mag.f
761	GGIO4.MX.AnIn5.mag.f
762	GGIO4.MX.AnIn6.mag.f
763	GGIO4.MX.AnIn7.mag.f
764	GGIO4.MX.AnIn8.mag.f
765	GGIO4.MX.AnIn9.mag.f
766	GGIO4.MX.AnIn10.mag.f
767	GGIO4.MX.AnIn11.mag.f
768	GGIO4.MX.AnIn12.mag.f
769	GGIO4.MX.AnIn13.mag.f
770	GGIO4.MX.AnIn14.mag.f
771	GGIO4.MX.AnIn15.mag.f
772	GGIO4.MX.AnIn16.mag.f
773	GGIO4.MX.AnIn17.mag.f
774	GGIO4.MX.AnIn18.mag.f
775	GGIO4.MX.AnIn19.mag.f
776	GGIO4.MX.AnIn20.mag.f
777	GGIO4.MX.AnIn21.mag.f
778	GGIO4.MX.AnIn22.mag.f
779	GGIO4.MX.AnIn23.mag.f
780	GGIO4.MX.AnIn24.mag.f
781	GGIO4.MX.AnIn25.mag.f
782	GGIO4.MX.AnIn26.mag.f
783	GGIO4.MX.AnIn27.mag.f
784	GGIO4.MX.AnIn28.mag.f
785	GGIO4.MX.AnIn29.mag.f
786	GGIO4.MX.AnIn30.mag.f
787	GGIO4.MX.AnIn31.mag.f
788	GGIO4.MX.AnIn32.mag.f
789	XSWI1.ST.Loc.stVal
790	XSWI1.ST.Pos.stVal

Enumeration	IEC 61850 report dataset items
791	XSWI2.ST.Loc.stVal
792	XSWI2.ST.Pos.stVal
793	XSWI3.ST.Loc.stVal
794	XSWI3.ST.Pos.stVal
795	XSWI4.ST.Loc.stVal
796	XSWI4.ST.Pos.stVal
797	XSWI5.ST.Loc.stVal
798	XSWI5.ST.Pos.stVal
799	XSWI6.ST.Loc.stVal
800	XSWI6.ST.Pos.stVal
801	XSWI7.ST.Loc.stVal
802	XSWI7.ST.Pos.stVal
803	XSWI8.ST.Loc.stVal
804	XSWI8.ST.Pos.stVal
805	XSWI9.ST.Loc.stVal
806	XSWI9.ST.Pos.stVal
807	XSWI10.ST.Loc.stVal
808	XSWI10.ST.Pos.stVal
809	XSWI11.ST.Loc.stVal
810	XSWI11.ST.Pos.stVal
811	XSWI12.ST.Loc.stVal
812	XSWI12.ST.Pos.stVal
813	XSWI13.ST.Loc.stVal
814	XSWI13.ST.Pos.stVal
815	XSWI14.ST.Loc.stVal
816	XSWI14.ST.Pos.stVal
817	XSWI15.ST.Loc.stVal
818	XSWI15.ST.Pos.stVal
819	XSWI16.ST.Loc.stVal
820	XSWI16.ST.Pos.stVal
821	XSWI17.ST.Loc.stVal
822	XSWI17.ST.Pos.stVal
823	XSWI18.ST.Loc.stVal
824	XSWI18.ST.Pos.stVal
825	XSWI19.ST.Loc.stVal
826	XSWI19.ST.Pos.stVal
827	XSWI20.ST.Loc.stVal
828	XSWI20.ST.Pos.stVal
829	XSWI21.ST.Loc.stVal
830	XSWI21.ST.Pos.stVal
831	XSWI22.ST.Loc.stVal
832	XSWI22.ST.Pos.stVal
833	XSWI23.ST.Loc.stVal
834	XSWI23.ST.Pos.stVal
835	XSWI24.ST.Loc.stVal
836	XSWI24.ST.Pos.stVal
837	XCBR1.ST.Loc.stVal
838	XCBR1.ST.Pos.stVal
839	XCBR2.ST.Loc.stVal
840	XCBR2.ST.Pos.stVal
841	XCBR3.ST.Loc.stVal
842	XCBR3.ST.Pos.stVal
843	XCBR4.ST.Loc.stVal
844	XCBR4.ST.Pos.stVal
845	XCBR5.ST.Loc.stVal
846	XCBR5.ST.Pos.stVal
847	XCBR6.ST.Loc.stVal
848	XCBR6.ST.Pos.stVal

B

F616
ENUMERATION: IEC 61850 GOOSE DATASET ITEMS

Enumeration	GOOSE dataset items
0	None
1	GGIO1.ST.Ind1.q
2	GGIO1.ST.Ind1.stVal
3	GGIO1.ST.Ind2.q
4	GGIO1.ST.Ind2.stVal
5	GGIO1.ST.Ind3.q
6	GGIO1.ST.Ind3.stVal
7	GGIO1.ST.Ind4.q
8	GGIO1.ST.Ind4.stVal
9	GGIO1.ST.Ind5.q
10	GGIO1.ST.Ind5.stVal
11	GGIO1.ST.Ind6.q
12	GGIO1.ST.Ind6.stVal
13	GGIO1.ST.Ind7.q
14	GGIO1.ST.Ind7.stVal
15	GGIO1.ST.Ind8.q
16	GGIO1.ST.Ind8.stVal
17	GGIO1.ST.Ind9.q
18	GGIO1.ST.Ind9.stVal
19	GGIO1.ST.Ind10.q
20	GGIO1.ST.Ind10.stVal
21	GGIO1.ST.Ind11.q
22	GGIO1.ST.Ind11.stVal
23	GGIO1.ST.Ind12.q
24	GGIO1.ST.Ind12.stVal
25	GGIO1.ST.Ind13.q
26	GGIO1.ST.Ind13.stVal
27	GGIO1.ST.Ind14.q
28	GGIO1.ST.Ind14.stVal
29	GGIO1.ST.Ind15.q
30	GGIO1.ST.Ind15.stVal
31	GGIO1.ST.Ind16.q
32	GGIO1.ST.Ind16.stVal
33	GGIO1.ST.Ind17.q
34	GGIO1.ST.Ind17.stVal
35	GGIO1.ST.Ind18.q
36	GGIO1.ST.Ind18.stVal
37	GGIO1.ST.Ind19.q
38	GGIO1.ST.Ind19.stVal
39	GGIO1.ST.Ind20.q
40	GGIO1.ST.Ind20.stVal
41	GGIO1.ST.Ind21.q
42	GGIO1.ST.Ind21.stVal

Enumeration	GOOSE dataset items
43	GGIO1.ST.Ind22.q
44	GGIO1.ST.Ind22.stVal
45	GGIO1.ST.Ind23.q
46	GGIO1.ST.Ind23.stVal
47	GGIO1.ST.Ind24.q
48	GGIO1.ST.Ind24.stVal
49	GGIO1.ST.Ind25.q
50	GGIO1.ST.Ind25.stVal
51	GGIO1.ST.Ind26.q
52	GGIO1.ST.Ind26.stVal
53	GGIO1.ST.Ind27.q
54	GGIO1.ST.Ind27.stVal
55	GGIO1.ST.Ind28.q
56	GGIO1.ST.Ind28.stVal
57	GGIO1.ST.Ind29.q
58	GGIO1.ST.Ind29.stVal
59	GGIO1.ST.Ind30.q
60	GGIO1.ST.Ind30.stVal
61	GGIO1.ST.Ind31.q
62	GGIO1.ST.Ind31.stVal
63	GGIO1.ST.Ind32.q
64	GGIO1.ST.Ind32.stVal
65	GGIO1.ST.Ind33.q
66	GGIO1.ST.Ind33.stVal
67	GGIO1.ST.Ind34.q
68	GGIO1.ST.Ind34.stVal
69	GGIO1.ST.Ind35.q
70	GGIO1.ST.Ind35.stVal
71	GGIO1.ST.Ind36.q
72	GGIO1.ST.Ind36.stVal
73	GGIO1.ST.Ind37.q
74	GGIO1.ST.Ind37.stVal
75	GGIO1.ST.Ind38.q
76	GGIO1.ST.Ind38.stVal
77	GGIO1.ST.Ind39.q
78	GGIO1.ST.Ind39.stVal
79	GGIO1.ST.Ind40.q
80	GGIO1.ST.Ind40.stVal
81	GGIO1.ST.Ind41.q
82	GGIO1.ST.Ind41.stVal
83	GGIO1.ST.Ind42.q
84	GGIO1.ST.Ind42.stVal
85	GGIO1.ST.Ind43.q
86	GGIO1.ST.Ind43.stVal
87	GGIO1.ST.Ind44.q
88	GGIO1.ST.Ind44.stVal
89	GGIO1.ST.Ind45.q
90	GGIO1.ST.Ind45.stVal
91	GGIO1.ST.Ind46.q
92	GGIO1.ST.Ind46.stVal
93	GGIO1.ST.Ind47.q
94	GGIO1.ST.Ind47.stVal
95	GGIO1.ST.Ind48.q

Enumeration	GOOSE dataset items
96	GGIO1.ST.Ind48.stVal
97	GGIO1.ST.Ind49.q
98	GGIO1.ST.Ind49.stVal
99	GGIO1.ST.Ind50.q
100	GGIO1.ST.Ind50.stVal
101	GGIO1.ST.Ind51.q
102	GGIO1.ST.Ind51.stVal
103	GGIO1.ST.Ind52.q
104	GGIO1.ST.Ind52.stVal
105	GGIO1.ST.Ind53.q
106	GGIO1.ST.Ind53.stVal
107	GGIO1.ST.Ind54.q
108	GGIO1.ST.Ind54.stVal
109	GGIO1.ST.Ind55.q
110	GGIO1.ST.Ind55.stVal
111	GGIO1.ST.Ind56.q
112	GGIO1.ST.Ind56.stVal
113	GGIO1.ST.Ind57.q
114	GGIO1.ST.Ind57.stVal
115	GGIO1.ST.Ind58.q
116	GGIO1.ST.Ind58.stVal
117	GGIO1.ST.Ind59.q
118	GGIO1.ST.Ind59.stVal
119	GGIO1.ST.Ind60.q
120	GGIO1.ST.Ind60.stVal
121	GGIO1.ST.Ind61.q
122	GGIO1.ST.Ind61.stVal
123	GGIO1.ST.Ind62.q
124	GGIO1.ST.Ind62.stVal
125	GGIO1.ST.Ind63.q
126	GGIO1.ST.Ind63.stVal
127	GGIO1.ST.Ind64.q
128	GGIO1.ST.Ind64.stVal
129	GGIO1.ST.Ind65.q
130	GGIO1.ST.Ind65.stVal
131	GGIO1.ST.Ind66.q
132	GGIO1.ST.Ind66.stVal
133	GGIO1.ST.Ind67.q
134	GGIO1.ST.Ind67.stVal
135	GGIO1.ST.Ind68.q
136	GGIO1.ST.Ind68.stVal
137	GGIO1.ST.Ind69.q
138	GGIO1.ST.Ind69.stVal
139	GGIO1.ST.Ind70.q
140	GGIO1.ST.Ind70.stVal
141	GGIO1.ST.Ind71.q
142	GGIO1.ST.Ind71.stVal
143	GGIO1.ST.Ind72.q
144	GGIO1.ST.Ind72.stVal
145	GGIO1.ST.Ind73.q
146	GGIO1.ST.Ind73.stVal
147	GGIO1.ST.Ind74.q
148	GGIO1.ST.Ind74.stVal

Enumeration	GOOSE dataset items
149	GGIO1.ST.Ind75.q
150	GGIO1.ST.Ind75.stVal
151	GGIO1.ST.Ind76.q
152	GGIO1.ST.Ind76.stVal
153	GGIO1.ST.Ind77.q
154	GGIO1.ST.Ind77.stVal
155	GGIO1.ST.Ind78.q
156	GGIO1.ST.Ind78.stVal
157	GGIO1.ST.Ind79.q
158	GGIO1.ST.Ind79.stVal
159	GGIO1.ST.Ind80.q
160	GGIO1.ST.Ind80.stVal
161	GGIO1.ST.Ind81.q
162	GGIO1.ST.Ind81.stVal
163	GGIO1.ST.Ind82.q
164	GGIO1.ST.Ind82.stVal
165	GGIO1.ST.Ind83.q
166	GGIO1.ST.Ind83.stVal
167	GGIO1.ST.Ind84.q
168	GGIO1.ST.Ind84.stVal
169	GGIO1.ST.Ind85.q
170	GGIO1.ST.Ind85.stVal
171	GGIO1.ST.Ind86.q
172	GGIO1.ST.Ind86.stVal
173	GGIO1.ST.Ind87.q
174	GGIO1.ST.Ind87.stVal
175	GGIO1.ST.Ind88.q
176	GGIO1.ST.Ind88.stVal
177	GGIO1.ST.Ind89.q
178	GGIO1.ST.Ind89.stVal
179	GGIO1.ST.Ind90.q
180	GGIO1.ST.Ind90.stVal
181	GGIO1.ST.Ind91.q
182	GGIO1.ST.Ind91.stVal
183	GGIO1.ST.Ind92.q
184	GGIO1.ST.Ind92.stVal
185	GGIO1.ST.Ind93.q
186	GGIO1.ST.Ind93.stVal
187	GGIO1.ST.Ind94.q
188	GGIO1.ST.Ind94.stVal
189	GGIO1.ST.Ind95.q
190	GGIO1.ST.Ind95.stVal
191	GGIO1.ST.Ind96.q
192	GGIO1.ST.Ind96.stVal
193	GGIO1.ST.Ind97.q
194	GGIO1.ST.Ind97.stVal
195	GGIO1.ST.Ind98.q
196	GGIO1.ST.Ind98.stVal
197	GGIO1.ST.Ind99.q
198	GGIO1.ST.Ind99.stVal
199	GGIO1.ST.Ind100.q
200	GGIO1.ST.Ind100.stVal
201	GGIO1.ST.Ind101.q

Enumeration	GOOSE dataset items
202	GGIO1.ST.Ind101.stVal
203	GGIO1.ST.Ind102.q
204	GGIO1.ST.Ind102.stVal
205	GGIO1.ST.Ind103.q
206	GGIO1.ST.Ind103.stVal
207	GGIO1.ST.Ind104.q
208	GGIO1.ST.Ind104.stVal
209	GGIO1.ST.Ind105.q
210	GGIO1.ST.Ind105.stVal
211	GGIO1.ST.Ind106.q
212	GGIO1.ST.Ind106.stVal
213	GGIO1.ST.Ind107.q
214	GGIO1.ST.Ind107.stVal
215	GGIO1.ST.Ind108.q
216	GGIO1.ST.Ind108.stVal
217	GGIO1.ST.Ind109.q
218	GGIO1.ST.Ind109.stVal
219	GGIO1.ST.Ind110.q
220	GGIO1.ST.Ind110.stVal
221	GGIO1.ST.Ind111.q
222	GGIO1.ST.Ind111.stVal
223	GGIO1.ST.Ind112.q
224	GGIO1.ST.Ind112.stVal
225	GGIO1.ST.Ind113.q
226	GGIO1.ST.Ind113.stVal
227	GGIO1.ST.Ind114.q
228	GGIO1.ST.Ind114.stVal
229	GGIO1.ST.Ind115.q
230	GGIO1.ST.Ind115.stVal
231	GGIO1.ST.Ind116.q
232	GGIO1.ST.Ind116.stVal
233	GGIO1.ST.Ind117.q
234	GGIO1.ST.Ind117.stVal
235	GGIO1.ST.Ind118.q
236	GGIO1.ST.Ind118.stVal
237	GGIO1.ST.Ind119.q
238	GGIO1.ST.Ind119.stVal
239	GGIO1.ST.Ind120.q
240	GGIO1.ST.Ind120.stVal
241	GGIO1.ST.Ind121.q
242	GGIO1.ST.Ind121.stVal
243	GGIO1.ST.Ind122.q
244	GGIO1.ST.Ind122.stVal
245	GGIO1.ST.Ind123.q
246	GGIO1.ST.Ind123.stVal
247	GGIO1.ST.Ind124.q
248	GGIO1.ST.Ind124.stVal
249	GGIO1.ST.Ind125.q
250	GGIO1.ST.Ind125.stVal
251	GGIO1.ST.Ind126.q
252	GGIO1.ST.Ind126.stVal
253	GGIO1.ST.Ind127.q
254	GGIO1.ST.Ind127.stVal

Enumeration	GOOSE dataset items
255	GGIO1.ST.Ind128.q
256	GGIO1.ST.Ind128.stVal
257	MMXU1.MX.TotW.mag.f
258	MMXU1.MX.TotVAr.mag.f
259	MMXU1.MX.TotVA.mag.f
260	MMXU1.MX.TotPF.mag.f
261	MMXU1.MX.Hz.mag.f
262	MMXU1.MX.PPV.phsAB.cVal.mag.f
263	MMXU1.MX.PPV.phsAB.cVal.ang.f
264	MMXU1.MX.PPV.phsBC.cVal.mag.f
265	MMXU1.MX.PPV.phsBC.cVal.ang.f
266	MMXU1.MX.PPV.phsCA.cVal.mag.f
267	MMXU1.MX.PPV.phsCA.cVal.ang.f
268	MMXU1.MX.PhV.phsA.cVal.mag.f
269	MMXU1.MX.PhV.phsA.cVal.ang.f
270	MMXU1.MX.PhV.phsB.cVal.mag.f
271	MMXU1.MX.PhV.phsB.cVal.ang.f
272	MMXU1.MX.PhV.phsC.cVal.mag.f
273	MMXU1.MX.PhV.phsC.cVal.ang.f
274	MMXU1.MX.A.phsA.cVal.mag.f
275	MMXU1.MX.A.phsA.cVal.ang.f
276	MMXU1.MX.A.phsB.cVal.mag.f
277	MMXU1.MX.A.phsB.cVal.ang.f
278	MMXU1.MX.A.phsC.cVal.mag.f
279	MMXU1.MX.A.phsC.cVal.ang.f
280	MMXU1.MX.A.neut.cVal.mag.f
281	MMXU1.MX.A.neut.cVal.ang.f
282	MMXU1.MX.W.phsA.cVal.mag.f
283	MMXU1.MX.W.phsB.cVal.mag.f
284	MMXU1.MX.W.phsC.cVal.mag.f
285	MMXU1.MX.VAr.phsA.cVal.mag.f
286	MMXU1.MX.VAr.phsB.cVal.mag.f
287	MMXU1.MX.VAr.phsC.cVal.mag.f
288	MMXU1.MX.VA.phsA.cVal.mag.f
289	MMXU1.MX.VA.phsB.cVal.mag.f
290	MMXU1.MX.VA.phsC.cVal.mag.f
291	MMXU1.MX.PF.phsA.cVal.mag.f
292	MMXU1.MX.PF.phsB.cVal.mag.f
293	MMXU1.MX.PF.phsC.cVal.mag.f
294	MMXU2.MX.TotW.mag.f
295	MMXU2.MX.TotVAr.mag.f
296	MMXU2.MX.TotVA.mag.f
297	MMXU2.MX.TotPF.mag.f
298	MMXU2.MX.Hz.mag.f
299	MMXU2.MX.PPV.phsAB.cVal.mag.f
300	MMXU2.MX.PPV.phsAB.cVal.ang.f
301	MMXU2.MX.PPV.phsBC.cVal.mag.f
302	MMXU2.MX.PPV.phsBC.cVal.ang.f
303	MMXU2.MX.PPV.phsCA.cVal.mag.f
304	MMXU2.MX.PPV.phsCA.cVal.ang.f
305	MMXU2.MX.PhV.phsA.cVal.mag.f
306	MMXU2.MX.PhV.phsA.cVal.ang.f
307	MMXU2.MX.PhV.phsB.cVal.mag.f

Enumeration	GOOSE dataset items
308	MMXU2.MX.PhV.phsB.cVal.ang.f
309	MMXU2.MX.PhV.phsC.cVal.mag.f
310	MMXU2.MX.PhV.phsC.cVal.ang.f
311	MMXU2.MX.A.phsA.cVal.mag.f
312	MMXU2.MX.A.phsA.cVal.ang.f
313	MMXU2.MX.A.phsB.cVal.mag.f
314	MMXU2.MX.A.phsB.cVal.ang.f
315	MMXU2.MX.A.phsC.cVal.mag.f
316	MMXU2.MX.A.phsC.cVal.ang.f
317	MMXU2.MX.A.neut.cVal.mag.f
318	MMXU2.MX.A.neut.cVal.ang.f
319	MMXU2.MX.W.phsA.cVal.mag.f
320	MMXU2.MX.W.phsB.cVal.mag.f
321	MMXU2.MX.W.phsC.cVal.mag.f
322	MMXU2.MX.VAr.phsA.cVal.mag.f
323	MMXU2.MX.VAr.phsB.cVal.mag.f
324	MMXU2.MX.VAr.phsC.cVal.mag.f
325	MMXU2.MX.VA.phsA.cVal.mag.f
326	MMXU2.MX.VA.phsB.cVal.mag.f
327	MMXU2.MX.VA.phsC.cVal.mag.f
328	MMXU2.MX.PF.phsA.cVal.mag.f
329	MMXU2.MX.PF.phsB.cVal.mag.f
330	MMXU2.MX.PF.phsC.cVal.mag.f
331	MMXU3.MX.TotW.mag.f
332	MMXU3.MX.TotVAr.mag.f
333	MMXU3.MX.TotVA.mag.f
334	MMXU3.MX.TotPF.mag.f
335	MMXU3.MX.Hz.mag.f
336	MMXU3.MX.PPV.phsAB.cVal.mag.f
337	MMXU3.MX.PPV.phsAB.cVal.ang.f
338	MMXU3.MX.PPV.phsBC.cVal.mag.f
339	MMXU3.MX.PPV.phsBC.cVal.ang.f
340	MMXU3.MX.PPV.phsCA.cVal.mag.f
341	MMXU3.MX.PPV.phsCA.cVal.ang.f
342	MMXU3.MX.PhV.phsA.cVal.mag.f
343	MMXU3.MX.PhV.phsA.cVal.ang.f
344	MMXU3.MX.PhV.phsB.cVal.mag.f
345	MMXU3.MX.PhV.phsB.cVal.ang.f
346	MMXU3.MX.PhV.phsC.cVal.mag.f
347	MMXU3.MX.PhV.phsC.cVal.ang.f
348	MMXU3.MX.A.phsA.cVal.mag.f
349	MMXU3.MX.A.phsA.cVal.ang.f
350	MMXU3.MX.A.phsB.cVal.mag.f
351	MMXU3.MX.A.phsB.cVal.ang.f
352	MMXU3.MX.A.phsC.cVal.mag.f
353	MMXU3.MX.A.phsC.cVal.ang.f
354	MMXU3.MX.A.neut.cVal.mag.f
355	MMXU3.MX.A.neut.cVal.ang.f
356	MMXU3.MX.W.phsA.cVal.mag.f
357	MMXU3.MX.W.phsB.cVal.mag.f
358	MMXU3.MX.W.phsC.cVal.mag.f
359	MMXU3.MX.VAr.phsA.cVal.mag.f
360	MMXU3.MX.VAr.phsB.cVal.mag.f

Enumeration	GOOSE dataset items
361	MMXU3.MX.VAr.phsC.cVal.mag.f
362	MMXU3.MX.VA.phsA.cVal.mag.f
363	MMXU3.MX.VA.phsB.cVal.mag.f
364	MMXU3.MX.VA.phsC.cVal.mag.f
365	MMXU3.MX.PF.phsA.cVal.mag.f
366	MMXU3.MX.PF.phsB.cVal.mag.f
367	MMXU3.MX.PF.phsC.cVal.mag.f
368	MMXU4.MX.TotW.mag.f
369	MMXU4.MX.TotVAr.mag.f
370	MMXU4.MX.TotVA.mag.f
371	MMXU4.MX.TotPF.mag.f
372	MMXU4.MX.Hz.mag.f
373	MMXU4.MX.PPV.phsAB.cVal.mag.f
374	MMXU4.MX.PPV.phsAB.cVal.ang.f
375	MMXU4.MX.PPV.phsBC.cVal.mag.f
376	MMXU4.MX.PPV.phsBC.cVal.ang.f
377	MMXU4.MX.PPV.phsCA.cVal.mag.f
378	MMXU4.MX.PPV.phsCA.cVal.ang.f
379	MMXU4.MX.PhV.phsA.cVal.mag.f
380	MMXU4.MX.PhV.phsA.cVal.ang.f
381	MMXU4.MX.PhV.phsB.cVal.mag.f
382	MMXU4.MX.PhV.phsB.cVal.ang.f
383	MMXU4.MX.PhV.phsC.cVal.mag.f
384	MMXU4.MX.PhV.phsC.cVal.ang.f
385	MMXU4.MX.A.phsA.cVal.mag.f
386	MMXU4.MX.A.phsA.cVal.ang.f
387	MMXU4.MX.A.phsB.cVal.mag.f
388	MMXU4.MX.A.phsB.cVal.ang.f
389	MMXU4.MX.A.phsC.cVal.mag.f
390	MMXU4.MX.A.phsC.cVal.ang.f
391	MMXU4.MX.A.neut.cVal.mag.f
392	MMXU4.MX.A.neut.cVal.ang.f
393	MMXU4.MX.W.phsA.cVal.mag.f
394	MMXU4.MX.W.phsB.cVal.mag.f
395	MMXU4.MX.W.phsC.cVal.mag.f
396	MMXU4.MX.VAr.phsA.cVal.mag.f
397	MMXU4.MX.VAr.phsB.cVal.mag.f
398	MMXU4.MX.VAr.phsC.cVal.mag.f
399	MMXU4.MX.VA.phsA.cVal.mag.f
400	MMXU4.MX.VA.phsB.cVal.mag.f
401	MMXU4.MX.VA.phsC.cVal.mag.f
402	MMXU4.MX.PF.phsA.cVal.mag.f
403	MMXU4.MX.PF.phsB.cVal.mag.f
404	MMXU4.MX.PF.phsC.cVal.mag.f
405	MMXU5.MX.TotW.mag.f
406	MMXU5.MX.TotVAr.mag.f
407	MMXU5.MX.TotVA.mag.f
408	MMXU5.MX.TotPF.mag.f
409	MMXU5.MX.Hz.mag.f
410	MMXU5.MX.PPV.phsAB.cVal.mag.f
411	MMXU5.MX.PPV.phsAB.cVal.ang.f
412	MMXU5.MX.PPV.phsBC.cVal.mag.f
413	MMXU5.MX.PPV.phsBC.cVal.ang.f

Enumeration	GOOSE dataset items
414	MMXU5.MX.PPV.phsCA.cVal.mag.f
415	MMXU5.MX.PPV.phsCA.cVal.ang.f
416	MMXU5.MX.PhV.phsA.cVal.mag.f
417	MMXU5.MX.PhV.phsA.cVal.ang.f
418	MMXU5.MX.PhV.phsB.cVal.mag.f
419	MMXU5.MX.PhV.phsB.cVal.ang.f
420	MMXU5.MX.PhV.phsC.cVal.mag.f
421	MMXU5.MX.PhV.phsC.cVal.ang.f
422	MMXU5.MX.A.phsA.cVal.mag.f
423	MMXU5.MX.A.phsA.cVal.ang.f
424	MMXU5.MX.A.phsB.cVal.mag.f
425	MMXU5.MX.A.phsB.cVal.ang.f
426	MMXU5.MX.A.phsC.cVal.mag.f
427	MMXU5.MX.A.phsC.cVal.ang.f
428	MMXU5.MX.A.neut.cVal.mag.f
429	MMXU5.MX.A.neut.cVal.ang.f
430	MMXU5.MX.W.phsA.cVal.mag.f
431	MMXU5.MX.W.phsB.cVal.mag.f
432	MMXU5.MX.W.phsC.cVal.mag.f
433	MMXU5.MX.VAr.phsA.cVal.mag.f
434	MMXU5.MX.VAr.phsB.cVal.mag.f
435	MMXU5.MX.VAr.phsC.cVal.mag.f
436	MMXU5.MX.VA.phsA.cVal.mag.f
437	MMXU5.MX.VA.phsB.cVal.mag.f
438	MMXU5.MX.VA.phsC.cVal.mag.f
439	MMXU5.MX.PF.phsA.cVal.mag.f
440	MMXU5.MX.PF.phsB.cVal.mag.f
441	MMXU5.MX.PF.phsC.cVal.mag.f
442	MMXU6.MX.TotW.mag.f
443	MMXU6.MX.TotVAr.mag.f
444	MMXU6.MX.TotVA.mag.f
445	MMXU6.MX.TotPF.mag.f
446	MMXU6.MX.Hz.mag.f
447	MMXU6.MX.PPV.phsAB.cVal.mag.f
448	MMXU6.MX.PPV.phsAB.cVal.ang.f
449	MMXU6.MX.PPV.phsBC.cVal.mag.f
450	MMXU6.MX.PPV.phsBC.cVal.ang.f
451	MMXU6.MX.PPV.phsCA.cVal.mag.f
452	MMXU6.MX.PPV.phsCA.cVal.ang.f
453	MMXU6.MX.PhV.phsA.cVal.mag.f
454	MMXU6.MX.PhV.phsA.cVal.ang.f
455	MMXU6.MX.PhV.phsB.cVal.mag.f
456	MMXU6.MX.PhV.phsB.cVal.ang.f
457	MMXU6.MX.PhV.phsC.cVal.mag.f
458	MMXU6.MX.PhV.phsC.cVal.ang.f
459	MMXU6.MX.A.phsA.cVal.mag.f
460	MMXU6.MX.A.phsA.cVal.ang.f
461	MMXU6.MX.A.phsB.cVal.mag.f
462	MMXU6.MX.A.phsB.cVal.ang.f
463	MMXU6.MX.A.phsC.cVal.mag.f
464	MMXU6.MX.A.phsC.cVal.ang.f
465	MMXU6.MX.A.neut.cVal.mag.f
466	MMXU6.MX.A.neut.cVal.ang.f

Enumeration	GOOSE dataset items
467	MMXU6.MX.W.phsA.cVal.mag.f
468	MMXU6.MX.W.phsB.cVal.mag.f
469	MMXU6.MX.W.phsC.cVal.mag.f
470	MMXU6.MX.VAr.phsA.cVal.mag.f
471	MMXU6.MX.VAr.phsB.cVal.mag.f
472	MMXU6.MX.VAr.phsC.cVal.mag.f
473	MMXU6.MX.VA.phsA.cVal.mag.f
474	MMXU6.MX.VA.phsB.cVal.mag.f
475	MMXU6.MX.VA.phsC.cVal.mag.f
476	MMXU6.MX.PF.phsA.cVal.mag.f
477	MMXU6.MX.PF.phsB.cVal.mag.f
478	MMXU6.MX.PF.phsC.cVal.mag.f
479	GGIO4.MX.AnIn1.mag.f
480	GGIO4.MX.AnIn2.mag.f
481	GGIO4.MX.AnIn3.mag.f
482	GGIO4.MX.AnIn4.mag.f
483	GGIO4.MX.AnIn5.mag.f
484	GGIO4.MX.AnIn6.mag.f
485	GGIO4.MX.AnIn7.mag.f
486	GGIO4.MX.AnIn8.mag.f
487	GGIO4.MX.AnIn9.mag.f
488	GGIO4.MX.AnIn10.mag.f
489	GGIO4.MX.AnIn11.mag.f
490	GGIO4.MX.AnIn12.mag.f
491	GGIO4.MX.AnIn13.mag.f
492	GGIO4.MX.AnIn14.mag.f
493	GGIO4.MX.AnIn15.mag.f
494	GGIO4.MX.AnIn16.mag.f
495	GGIO4.MX.AnIn17.mag.f
496	GGIO4.MX.AnIn18.mag.f
497	GGIO4.MX.AnIn19.mag.f
498	GGIO4.MX.AnIn20.mag.f
499	GGIO4.MX.AnIn21.mag.f
500	GGIO4.MX.AnIn22.mag.f
501	GGIO4.MX.AnIn23.mag.f
502	GGIO4.MX.AnIn24.mag.f
503	GGIO4.MX.AnIn25.mag.f
504	GGIO4.MX.AnIn26.mag.f
505	GGIO4.MX.AnIn27.mag.f
506	GGIO4.MX.AnIn28.mag.f
507	GGIO4.MX.AnIn29.mag.f
508	GGIO4.MX.AnIn30.mag.f
509	GGIO4.MX.AnIn31.mag.f
510	GGIO4.MX.AnIn32.mag.f
511	GGIO5.ST.UIntIn1.q
512	GGIO5.ST.UIntIn1.stVal
513	GGIO5.ST.UIntIn2.q
514	GGIO5.ST.UIntIn2.stVal
515	GGIO5.ST.UIntIn3.q
516	GGIO5.ST.UIntIn3.stVal
517	GGIO5.ST.UIntIn4.q
518	GGIO5.ST.UIntIn4.stVal
519	GGIO5.ST.UIntIn5.q

Enumeration	GOOSE dataset items
520	GGIO5.ST.UIntIn5.stVal
521	GGIO5.ST.UIntIn6.q
522	GGIO5.ST.UIntIn6.stVal
523	GGIO5.ST.UIntIn7.q
524	GGIO5.ST.UIntIn7.stVal
525	GGIO5.ST.UIntIn8.q
526	GGIO5.ST.UIntIn8.stVal
527	GGIO5.ST.UIntIn9.q
528	GGIO5.ST.UIntIn9.stVal
529	GGIO5.ST.UIntIn10.q
530	GGIO5.ST.UIntIn10.stVal
531	GGIO5.ST.UIntIn11.q
532	GGIO5.ST.UIntIn11.stVal
533	GGIO5.ST.UIntIn12.q
534	GGIO5.ST.UIntIn12.stVal
535	GGIO5.ST.UIntIn13.q
536	GGIO5.ST.UIntIn13.stVal
537	GGIO5.ST.UIntIn14.q
538	GGIO5.ST.UIntIn14.stVal
539	GGIO5.ST.UIntIn15.q
540	GGIO5.ST.UIntIn15.stVal
541	GGIO5.ST.UIntIn16.q
542	GGIO5.ST.UIntIn16.stVal
543	PDIF1.ST.Str.general
544	PDIF1.ST.Op.general
545	PDIF2.ST.Str.general
546	PDIF2.ST.Op.general
547	PDIF3.ST.Str.general
548	PDIF3.ST.Op.general
549	PDIF4.ST.Str.general
550	PDIF4.ST.Op.general
551	PDIS1.ST.Str.general
552	PDIS1.ST.Op.general
553	PDIS2.ST.Str.general
554	PDIS2.ST.Op.general
555	PDIS3.ST.Str.general
556	PDIS3.ST.Op.general
557	PDIS4.ST.Str.general
558	PDIS4.ST.Op.general
559	PDIS5.ST.Str.general
560	PDIS5.ST.Op.general
561	PDIS6.ST.Str.general
562	PDIS6.ST.Op.general
563	PDIS7.ST.Str.general
564	PDIS7.ST.Op.general
565	PDIS8.ST.Str.general
566	PDIS8.ST.Op.general
567	PDIS9.ST.Str.general
568	PDIS9.ST.Op.general
569	PDIS10.ST.Str.general
570	PDIS10.ST.Op.general
571	PIOC1.ST.Str.general
572	PIOC1.ST.Op.general

Enumeration	GOOSE dataset items
573	PIOC2.ST.Str.general
574	PIOC2.ST.Op.general
575	PIOC3.ST.Str.general
576	PIOC3.ST.Op.general
577	PIOC4.ST.Str.general
578	PIOC4.ST.Op.general
579	PIOC5.ST.Str.general
580	PIOC5.ST.Op.general
581	PIOC6.ST.Str.general
582	PIOC6.ST.Op.general
583	PIOC7.ST.Str.general
584	PIOC7.ST.Op.general
585	PIOC8.ST.Str.general
586	PIOC8.ST.Op.general
587	PIOC9.ST.Str.general
588	PIOC9.ST.Op.general
589	PIOC10.ST.Str.general
590	PIOC10.ST.Op.general
591	PIOC11.ST.Str.general
592	PIOC11.ST.Op.general
593	PIOC12.ST.Str.general
594	PIOC12.ST.Op.general
595	PIOC13.ST.Str.general
596	PIOC13.ST.Op.general
597	PIOC14.ST.Str.general
598	PIOC14.ST.Op.general
599	PIOC15.ST.Str.general
600	PIOC15.ST.Op.general
601	PIOC16.ST.Str.general
602	PIOC16.ST.Op.general
603	PIOC17.ST.Str.general
604	PIOC17.ST.Op.general
605	PIOC18.ST.Str.general
606	PIOC18.ST.Op.general
607	PIOC19.ST.Str.general
608	PIOC19.ST.Op.general
609	PIOC20.ST.Str.general
610	PIOC20.ST.Op.general
611	PIOC21.ST.Str.general
612	PIOC21.ST.Op.general
613	PIOC22.ST.Str.general
614	PIOC22.ST.Op.general
615	PIOC23.ST.Str.general
616	PIOC23.ST.Op.general
617	PIOC24.ST.Str.general
618	PIOC24.ST.Op.general
619	PIOC25.ST.Str.general
620	PIOC25.ST.Op.general
621	PIOC26.ST.Str.general
622	PIOC26.ST.Op.general
623	PIOC27.ST.Str.general
624	PIOC27.ST.Op.general
625	PIOC28.ST.Str.general
626	PIOC28.ST.Op.general
627	PIOC29.ST.Str.general
628	PIOC29.ST.Op.general
629	PIOC30.ST.Str.general
630	PIOC30.ST.Op.general
631	PIOC31.ST.Str.general
632	PIOC31.ST.Op.general
633	PIOC32.ST.Str.general
634	PIOC32.ST.Op.general
635	PIOC33.ST.Str.general
636	PIOC33.ST.Op.general
637	PIOC34.ST.Str.general
638	PIOC34.ST.Op.general
639	PIOC35.ST.Str.general
640	PIOC35.ST.Op.general
641	PIOC36.ST.Str.general
642	PIOC36.ST.Op.general
643	PIOC37.ST.Str.general
644	PIOC37.ST.Op.general
645	PIOC38.ST.Str.general
646	PIOC38.ST.Op.general
647	PIOC39.ST.Str.general
648	PIOC39.ST.Op.general
649	PIOC40.ST.Str.general
650	PIOC40.ST.Op.general
651	PIOC41.ST.Str.general
652	PIOC41.ST.Op.general
653	PIOC42.ST.Str.general
654	PIOC42.ST.Op.general
655	PIOC43.ST.Str.general
656	PIOC43.ST.Op.general
657	PIOC44.ST.Str.general
658	PIOC44.ST.Op.general
659	PIOC45.ST.Str.general
660	PIOC45.ST.Op.general
661	PIOC46.ST.Str.general
662	PIOC46.ST.Op.general
663	PIOC47.ST.Str.general
664	PIOC47.ST.Op.general
665	PIOC48.ST.Str.general
666	PIOC48.ST.Op.general
667	PIOC49.ST.Str.general
668	PIOC49.ST.Op.general
669	PIOC50.ST.Str.general
670	PIOC50.ST.Op.general
671	PIOC51.ST.Str.general
672	PIOC51.ST.Op.general
673	PIOC52.ST.Str.general
674	PIOC52.ST.Op.general
675	PIOC53.ST.Str.general
676	PIOC53.ST.Op.general
677	PIOC54.ST.Str.general
678	PIOC54.ST.Op.general

Enumeration	GOOSE dataset items
679	PIOC55.ST.Str.general
680	PIOC55.ST.Op.general
681	PIOC56.ST.Str.general
682	PIOC56.ST.Op.general
683	PIOC57.ST.Str.general
684	PIOC57.ST.Op.general
685	PIOC58.ST.Str.general
686	PIOC58.ST.Op.general
687	PIOC59.ST.Str.general
688	PIOC59.ST.Op.general
689	PIOC60.ST.Str.general
690	PIOC60.ST.Op.general
691	PIOC61.ST.Str.general
692	PIOC61.ST.Op.general
693	PIOC62.ST.Str.general
694	PIOC62.ST.Op.general
695	PIOC63.ST.Str.general
696	PIOC63.ST.Op.general
697	PIOC64.ST.Str.general
698	PIOC64.ST.Op.general
699	PIOC65.ST.Str.general
700	PIOC65.ST.Op.general
701	PIOC66.ST.Str.general
702	PIOC66.ST.Op.general
703	PIOC67.ST.Str.general
704	PIOC67.ST.Op.general
705	PIOC68.ST.Str.general
706	PIOC68.ST.Op.general
707	PIOC69.ST.Str.general
708	PIOC69.ST.Op.general
709	PIOC70.ST.Str.general
710	PIOC70.ST.Op.general
711	PIOC71.ST.Str.general
712	PIOC71.ST.Op.general
713	PIOC72.ST.Str.general
714	PIOC72.ST.Op.general
715	PTOC1.ST.Str.general
716	PTOC1.ST.Op.general
717	PTOC2.ST.Str.general
718	PTOC2.ST.Op.general
719	PTOC3.ST.Str.general
720	PTOC3.ST.Op.general
721	PTOC4.ST.Str.general
722	PTOC4.ST.Op.general
723	PTOC5.ST.Str.general
724	PTOC5.ST.Op.general
725	PTOC6.ST.Str.general
726	PTOC6.ST.Op.general
727	PTOC7.ST.Str.general
728	PTOC7.ST.Op.general
729	PTOC8.ST.Str.general
730	PTOC8.ST.Op.general
731	PTOC9.ST.Str.general

Enumeration	GOOSE dataset items
732	PTOC9.ST.Op.general
733	PTOC10.ST.Str.general
734	PTOC10.ST.Op.general
735	PTOC11.ST.Str.general
736	PTOC11.ST.Op.general
737	PTOC12.ST.Str.general
738	PTOC12.ST.Op.general
739	PTOC13.ST.Str.general
740	PTOC13.ST.Op.general
741	PTOC14.ST.Str.general
742	PTOC14.ST.Op.general
743	PTOC15.ST.Str.general
744	PTOC15.ST.Op.general
745	PTOC16.ST.Str.general
746	PTOC16.ST.Op.general
747	PTOC17.ST.Str.general
748	PTOC17.ST.Op.general
749	PTOC18.ST.Str.general
750	PTOC18.ST.Op.general
751	PTOC19.ST.Str.general
752	PTOC19.ST.Op.general
753	PTOC20.ST.Str.general
754	PTOC20.ST.Op.general
755	PTOC21.ST.Str.general
756	PTOC21.ST.Op.general
757	PTOC22.ST.Str.general
758	PTOC22.ST.Op.general
759	PTOC23.ST.Str.general
760	PTOC23.ST.Op.general
761	PTOC24.ST.Str.general
762	PTOC24.ST.Op.general
763	PTOV1.ST.Str.general
764	PTOV1.ST.Op.general
765	PTOV2.ST.Str.general
766	PTOV2.ST.Op.general
767	PTOV3.ST.Str.general
768	PTOV3.ST.Op.general
769	PTOV4.ST.Str.general
770	PTOV4.ST.Op.general
771	PTOV5.ST.Str.general
772	PTOV5.ST.Op.general
773	PTOV6.ST.Str.general
774	PTOV6.ST.Op.general
775	PTOV7.ST.Str.general
776	PTOV7.ST.Op.general
777	PTOV8.ST.Str.general
778	PTOV8.ST.Op.general
779	PTOV9.ST.Str.general
780	PTOV9.ST.Op.general
781	PTOV10.ST.Str.general
782	PTOV10.ST.Op.general
783	PTRC1.ST.Tr.general
784	PTRC1.ST.Op.general

Enumeration	GOOSE dataset items
785	PTRC2.ST.Tr.general
786	PTRC2.ST.Op.general
787	PTRC3.ST.Tr.general
788	PTRC3.ST.Op.general
789	PTRC4.ST.Tr.general
790	PTRC4.ST.Op.general
791	PTRC5.ST.Tr.general
792	PTRC5.ST.Op.general
793	PTRC6.ST.Tr.general
794	PTRC6.ST.Op.general
795	PTUV1.ST.Str.general
796	PTUV1.ST.Op.general
797	PTUV2.ST.Str.general
798	PTUV2.ST.Op.general
799	PTUV3.ST.Str.general
800	PTUV3.ST.Op.general
801	PTUV4.ST.Str.general
802	PTUV4.ST.Op.general
803	PTUV5.ST.Str.general
804	PTUV5.ST.Op.general
805	PTUV6.ST.Str.general
806	PTUV6.ST.Op.general
807	PTUV7.ST.Str.general
808	PTUV7.ST.Op.general
809	PTUV8.ST.Str.general
810	PTUV8.ST.Op.general
811	PTUV9.ST.Str.general
812	PTUV9.ST.Op.general
813	PTUV10.ST.Str.general
814	PTUV10.ST.Op.general
815	PTUV11.ST.Str.general
816	PTUV11.ST.Op.general
817	PTUV12.ST.Str.general
818	PTUV12.ST.Op.general
819	PTUV13.ST.Str.general
820	PTUV13.ST.Op.general
821	RBRF1.ST.OpEx.general
822	RBRF1.ST.OpIn.general
823	RBRF2.ST.OpEx.general
824	RBRF2.ST.OpIn.general
825	RBRF3.ST.OpEx.general
826	RBRF3.ST.OpIn.general
827	RBRF4.ST.OpEx.general
828	RBRF4.ST.OpIn.general
829	RBRF5.ST.OpEx.general
830	RBRF5.ST.OpIn.general
831	RBRF6.ST.OpEx.general
832	RBRF6.ST.OpIn.general
833	RBRF7.ST.OpEx.general
834	RBRF7.ST.OpIn.general
835	RBRF8.ST.OpEx.general
836	RBRF8.ST.OpIn.general
837	RBRF9.ST.OpEx.general

Enumeration	GOOSE dataset items
838	RBRF9.ST.OpIn.general
839	RBRF10.ST.OpEx.general
840	RBRF10.ST.OpIn.general
841	RBRF11.ST.OpEx.general
842	RBRF11.ST.OpIn.general
843	RBRF12.ST.OpEx.general
844	RBRF12.ST.OpIn.general
845	RBRF13.ST.OpEx.general
846	RBRF13.ST.OpIn.general
847	RBRF14.ST.OpEx.general
848	RBRF14.ST.OpIn.general
849	RBRF15.ST.OpEx.general
850	RBRF15.ST.OpIn.general
851	RBRF16.ST.OpEx.general
852	RBRF16.ST.OpIn.general
853	RBRF17.ST.OpEx.general
854	RBRF17.ST.OpIn.general
855	RBRF18.ST.OpEx.general
856	RBRF18.ST.OpIn.general
857	RBRF19.ST.OpEx.general
858	RBRF19.ST.OpIn.general
859	RBRF20.ST.OpEx.general
860	RBRF20.ST.OpIn.general
861	RBRF21.ST.OpEx.general
862	RBRF21.ST.OpIn.general
863	RBRF22.ST.OpEx.general
864	RBRF22.ST.OpIn.general
865	RBRF23.ST.OpEx.general
866	RBRF23.ST.OpIn.general
867	RBRF24.ST.OpEx.general
868	RBRF24.ST.OpIn.general
869	RFLO1.MX.FltDiskm.mag.f
870	RFLO2.MX.FltDiskm.mag.f
871	RFLO3.MX.FltDiskm.mag.f
872	RFLO4.MX.FltDiskm.mag.f
873	RFLO5.MX.FltDiskm.mag.f
874	RPSB1.ST.Str.general
875	RPSB1.ST.Op.general
876	RPSB1.ST.BlkZn.stVal
877	RREC1.ST.Op.general
878	RREC1.ST.AutoRecSt.stVal
879	RREC2.ST.Op.general
880	RREC2.ST.AutoRecSt.stVal
881	RREC3.ST.Op.general
882	RREC3.ST.AutoRecSt.stVal
883	RREC4.ST.Op.general
884	RREC4.ST.AutoRecSt.stVal
885	RREC5.ST.Op.general
886	RREC5.ST.AutoRecSt.stVal
887	RREC6.ST.Op.general
888	RREC6.ST.AutoRecSt.stVal
889	CSWI1.ST.Loc.stVal
890	CSWI1.ST.Pos.stVal

Enumeration	GOOSE dataset items
891	CSWI2.ST.Loc.stVal
892	CSWI2.ST.Pos.stVal
893	CSWI3.ST.Loc.stVal
894	CSWI3.ST.Pos.stVal
895	CSWI4.ST.Loc.stVal
896	CSWI4.ST.Pos.stVal
897	CSWI5.ST.Loc.stVal
898	CSWI5.ST.Pos.stVal
899	CSWI6.ST.Loc.stVal
900	CSWI6.ST.Pos.stVal
901	CSWI7.ST.Loc.stVal
902	CSWI7.ST.Pos.stVal
903	CSWI8.ST.Loc.stVal
904	CSWI8.ST.Pos.stVal
905	CSWI9.ST.Loc.stVal
906	CSWI9.ST.Pos.stVal
907	CSWI10.ST.Loc.stVal
908	CSWI10.ST.Pos.stVal
909	CSWI11.ST.Loc.stVal
910	CSWI11.ST.Pos.stVal
911	CSWI12.ST.Loc.stVal
912	CSWI12.ST.Pos.stVal
913	CSWI13.ST.Loc.stVal
914	CSWI13.ST.Pos.stVal
915	CSWI14.ST.Loc.stVal
916	CSWI14.ST.Pos.stVal
917	CSWI15.ST.Loc.stVal
918	CSWI15.ST.Pos.stVal
919	CSWI16.ST.Loc.stVal
920	CSWI16.ST.Pos.stVal
921	CSWI17.ST.Loc.stVal
922	CSWI17.ST.Pos.stVal
923	CSWI18.ST.Loc.stVal
924	CSWI18.ST.Pos.stVal
925	CSWI19.ST.Loc.stVal
926	CSWI19.ST.Pos.stVal
927	CSWI20.ST.Loc.stVal
928	CSWI20.ST.Pos.stVal
929	CSWI21.ST.Loc.stVal
930	CSWI21.ST.Pos.stVal
931	CSWI22.ST.Loc.stVal
932	CSWI22.ST.Pos.stVal
933	CSWI23.ST.Loc.stVal
934	CSWI23.ST.Pos.stVal
935	CSWI24.ST.Loc.stVal
936	CSWI24.ST.Pos.stVal
937	CSWI25.ST.Loc.stVal
938	CSWI25.ST.Pos.stVal
939	CSWI26.ST.Loc.stVal
940	CSWI26.ST.Pos.stVal
941	CSWI27.ST.Loc.stVal
942	CSWI27.ST.Pos.stVal
943	CSWI28.ST.Loc.stVal

Enumeration	GOOSE dataset items
944	CSWI28.ST.Pos.stVal
945	CSWI29.ST.Loc.stVal
946	CSWI29.ST.Pos.stVal
947	CSWI30.ST.Loc.stVal
948	CSWI30.ST.Pos.stVal
949	XSWI1.ST.Loc.stVal
950	XSWI1.ST.Pos.stVal
951	XSWI2.ST.Loc.stVal
952	XSWI2.ST.Pos.stVal
953	XSWI3.ST.Loc.stVal
954	XSWI3.ST.Pos.stVal
955	XSWI4.ST.Loc.stVal
956	XSWI4.ST.Pos.stVal
957	XSWI5.ST.Loc.stVal
958	XSWI5.ST.Pos.stVal
959	XSWI6.ST.Loc.stVal
960	XSWI6.ST.Pos.stVal
961	XSWI7.ST.Loc.stVal
962	XSWI7.ST.Pos.stVal
963	XSWI8.ST.Loc.stVal
964	XSWI8.ST.Pos.stVal
965	XSWI9.ST.Loc.stVal
966	XSWI9.ST.Pos.stVal
967	XSWI10.ST.Loc.stVal
968	XSWI10.ST.Pos.stVal
969	XSWI11.ST.Loc.stVal
970	XSWI11.ST.Pos.stVal
971	XSWI12.ST.Loc.stVal
972	XSWI12.ST.Pos.stVal
973	XSWI13.ST.Loc.stVal
974	XSWI13.ST.Pos.stVal
975	XSWI14.ST.Loc.stVal
976	XSWI14.ST.Pos.stVal
977	XSWI15.ST.Loc.stVal
978	XSWI15.ST.Pos.stVal
979	XSWI16.ST.Loc.stVal
980	XSWI16.ST.Pos.stVal
981	XSWI17.ST.Loc.stVal
982	XSWI17.ST.Pos.stVal
983	XSWI18.ST.Loc.stVal
984	XSWI18.ST.Pos.stVal
985	XSWI19.ST.Loc.stVal
986	XSWI19.ST.Pos.stVal
987	XSWI20.ST.Loc.stVal
988	XSWI20.ST.Pos.stVal
989	XSWI21.ST.Loc.stVal
990	XSWI21.ST.Pos.stVal
991	XSWI22.ST.Loc.stVal
992	XSWI22.ST.Pos.stVal
993	XSWI23.ST.Loc.stVal
994	XSWI23.ST.Pos.stVal
995	XSWI24.ST.Loc.stVal
996	XSWI24.ST.Pos.stVal

Enumeration	GOOSE dataset items
997	XCBR1.ST.Loc.stVal
998	XCBR1.ST.Pos.stVal
999	XCBR2.ST.Loc.stVal
1000	XCBR2.ST.Pos.stVal
1001	XCBR3.ST.Loc.stVal
1002	XCBR3.ST.Pos.stVal
1003	XCBR4.ST.Loc.stVal
1004	XCBR4.ST.Pos.stVal
1005	XCBR5.ST.Loc.stVal
1006	XCBR5.ST.Pos.stVal
1007	XCBR6.ST.Loc.stVal
1008	XCBR6.ST.Pos.stVal

F617
ENUMERATION: LOGIN ROLES

Enumeration	Role
0	None
1	Administrator
2	Supervisor
3	Engineer
4	Operator
5	Factory

F618
BITFIED: SECURITY STATUS INDICATOR

Has been activated, whether the password has been set.

1 = Bit#0, Administrator password was set. The list is continued for all other roles (Engineer = bit#2, Operator = bit#3, Observer = bit#3).

F619
ENUMERATION: RADIUS AUTHENTICATION METHOD

0 = EAP-TTLS

F621
ENUMERATION: MODBUS LOGIN ROLES

Enumeration	Role
0	None
1	Administrator
2	Supervisor
3	Engineer
4	Operator
5	Observer

F623
ENUMERATION: REAL-TIME CLOCK SYNCHRONIZING SOURCE CONFIGURATION

Enumeration	Item
0	None
1	PP/IRIG-B/PTP/SNTP
2	IRIG-B/PP/PTP/SNTP
3	PP/PTP/IRIG-B/SNTP

F624
ENUMERATION: REAL-TIME CLOCK SYNCHRONZING SOURCE ACTUALS

Enumeration	Item
0	None
1	Port 1 PTP Clock
2	Port 2 PTP Clock
3	Port 3 PTP Clock
4	IRIG-B
5	SNTP

F625
ENUMERATION: PTP STATE

Enumeration	Item
0	Disabled
1	No Signal
2	Calibrating
3	Synchronized
4	Synchronized (No PDelay)

F626
ENUMERATION: NETWORK PORT FOR REMOTE DEVICE

Enumeration	Item
0	None
1	Network Port 1
2	Network Port 2
3	Network Port 3

F627
ENUMERATION: REDUNDANCY MODE

Enumeration	Item
0	None
1	Failover
2	PRP

F628
ENUMERATION: SECURITY BYPASS ACCESS

Disables security on local access, remote access, or both.

Enumeration	Item
0	Disabled
1	Local and Remote
2	Local
3	Remote

F629
ENUMERATION: SCADA PROTOCOL

0 = DNP 3.0, 1 = IEC 60870-5-104, 2 = IEC 60870-5-103

F630
ENUMERATION: IEC 103 ASDU TYPE

0 = 3, 1 = 9

F631
ENUMERATION: VIRTUAL INPUTS FOR IEC 103

Enumeration	Item
0	OFF
1	Virtual Input 1
2	Virtual Input 2
3	Virtual Input 3
↓	↓
64	Virtual Input 64

C.1.1 INTRODUCTION

The IEC 61850 standard is the result of electric utilities and vendors of electronic equipment to produce standardized communications systems. IEC 61850 is a series of standards describing client/server and peer-to-peer communications, substation design and configuration, testing, environmental and project standards. The complete set includes:

- IEC 61850-1: Introduction and overview
- IEC 61850-2: Glossary
- IEC 61850-3: General requirements
- IEC 61850-4: System and project management
- IEC 61850-5: Communications and requirements for functions and device models
- IEC 61850-6: Configuration description language for communication in electrical substations related to IEDs
- IEC 61850-7-1: Basic communication structure for substation and feeder equipment - Principles and models
- IEC 61850-7-2: Basic communication structure for substation and feeder equipment - Abstract communication service interface (ACSI)
- IEC 61850-7-3: Basic communication structure for substation and feeder equipment – Common data classes
- IEC 61850-7-4: Basic communication structure for substation and feeder equipment – Compatible logical node classes and data classes
- IEC 61850-8-1: Specific Communication Service Mapping (SCSM) – Mappings to MMS (ISO 9506-1 and ISO 9506-2) and to ISO/IEC 8802-3
- IEC 61850-9-1: Specific Communication Service Mapping (SCSM) – Sampled values over serial unidirectional multidrop point to point link
- IEC 61850-9-2: Specific Communication Service Mapping (SCSM) – Sampled values over ISO/IEC 8802-3
- IEC 61850-10: Conformance testing

These documents can be obtained from the IEC (http://www.iec.ch). It is strongly recommended that all those involved with any IEC 61850 implementation obtain this document set.

C.1.2 COMMUNICATION PROFILES

IEC 61850 specifies the use of the Manufacturing Message Specification (MMS) at the upper (application) layer for transfer of real-time data. This protocol has been in existence for several of years and provides a set of services suitable for the transfer of data within a substation LAN environment. Actual MMS protocol services are mapped to IEC 61850 abstract services in IEC 61850-8-1.

The G60 relay supports IEC 61850 server services over TCP/IP. The TCP/IP profile requires the G60 to have an IP address to establish communications. These addresses are located in the **SETTINGS** ⇨ **PRODUCT SETUP** ⇨⇩ **COMMUNICATIONS** ⇨⇩ **NETWORK** menu. It is possible to have up to five simultaneous connections (in addition to DNP and Modbus/TCP (non-IEC 61850) connections).

- **Client/server**: This is a connection-oriented type of communication. The connection is initiated by the client, and communication activity is controlled by the client. IEC 61850 clients are often substation computers running HMI programs or SOE logging software. Servers are usually substation equipment such as protection relays, meters, RTUs, transformer tap changers, or bay controllers.
- **Peer-to-peer**: This is a non-connection-oriented, high speed type of communication usually between substation equipment such as protection relays. GSSE and GOOSE are methods of peer-to-peer communication.
- **Substation configuration language (SCL)**: A substation configuration language is a number of files used to describe the configuration of substation equipment. Each configured device has an IEC Capability Description (ICD) file. The substation single line information is stored in a System Specification Description (SSD) file. The entire substation configuration is stored in a Substation Configuration Description (SCD) file. The SCD file is the combination of the individual ICD files and the SSD file.

C.1.3 FILE TRANSFER BY IEC 61850

The G60 supports file transfer by IEC 61850. The approach is as follows, using the SISCO AX-S4 61850 client software as an example.

1. In the AX-S4 61850 Explorer window, click the **Tools** menu and access the SISCO File Transfer Utility.
2. Select the **Remote AR Name** from the drop-down list. Available files appear in the **File Specification** area on the right side of the window.
3. With the **Copy** option active, select a file to transfer and click the **Go** button. The file is copied and displays in the **Local** list on the left side of the window.
4. Repeat the process to transfer any other files.

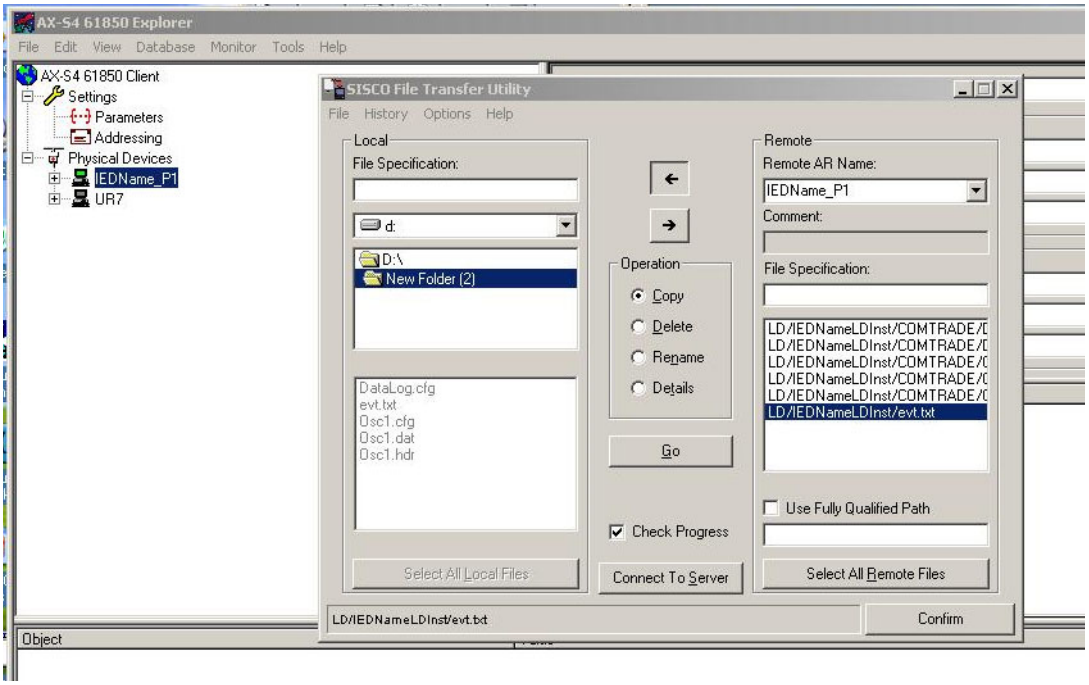

Figure C–1: FILE TRANSFER BY IEC 61850

C.2.1 OVERVIEW

IEC 61850 defines an object-oriented approach to data and services. An IEC 61850 *physical device* can contain one or more *logical device(s)*. Each logical device can contain many *logical nodes*. Each logical node can contain many *data objects*. Each data object is composed of *data attributes* and *data attribute components*. Services are available at each level for performing various functions, such as reading, writing, control commands, and reporting.

Each G60 IED represents one IEC 61850 physical device. The physical device contains one logical device, and the logical device contains many logical nodes. The logical node LPHD1 contains information about the G60 IED physical device. The logical node LLN0 contains information about the G60 IED logical device.

C.2.2 GGIO1: DIGITAL STATUS VALUES

The GGIO1 logical node is available in the G60 to provide access to as many 128 digital status points and associated timestamps and quality flags. The data content must be configured before the data can be used. GGIO1 provides digital status points for access by clients.

It is intended that clients use GGIO1 in order to access digital status values from the G60. Configuration settings are provided to allow the selection of the number of digital status indications available in GGIO1 (8 to 128), and to allow the choice of the G60 FlexLogic operands that drive the status of the GGIO1 status indications. Clients can utilize the IEC 61850 buffered and unbuffered reporting features available from GGIO1 in order to build sequence of events (SOE) logs and HMI display screens. Buffered reporting should generally be used for SOE logs since the buffering capability reduces the chances of missing data state changes. Unbuffered reporting should generally be used for local status display.

C.2.3 GGIO2: DIGITAL CONTROL VALUES

The GGIO2 logical node is available to provide access to the G60 virtual inputs. Virtual inputs are single-point control (binary) values that can be written by clients. They are generally used as control inputs. GGIO2 provides access to the virtual inputs through the IEC 61850 standard control model (ctlModel) services:

- Status only.
- Direct control with normal security.
- SBO control with normal security.

Configuration settings are available to select the control model for each point. Each virtual input used through GGIO2 should have its **VIRTUAL INPUT 1(64) FUNCTION** setting programmed as “Enabled” and its corresponding **GGIO2 CF SPSCO1(64) CTLMODEL** setting programmed to the appropriate control configuration.

C.2.4 GGIO3: DIGITAL STATUS AND ANALOG VALUES FROM GOOSE DATA

The GGIO3 logical node is available to provide access for clients to values received via configurable GOOSE messages. The values of the digital status indications and analog values in GGIO3 originate in GOOSE messages sent from other devices.

C.2.5 GGIO4: GENERIC ANALOG MEASURED VALUES

The GGIO4 logical node provides access to as many as 32 analog value points, as well as associated timestamps and quality flags. The data content must be configured before the data can be used. GGIO4 provides analog values for access by clients.

It is intended that clients use GGIO4 to access generic analog values from the G60. Configuration settings allow the selection of the number of analog values available in GGIO4 (4 to 32) and the choice of the FlexAnalog values that determine the value of the GGIO4 analog inputs. Clients can utilize polling or the IEC 61850 unbuffered reporting feature available from GGIO4 in order to obtain the analog values provided by GGIO4.

C.2.6 MMXU: ANALOG MEASURED VALUES

A limited number of measured analog values are available through the MMXU logical nodes.

Each MMXU logical node provides data from a G60 current and voltage source. There is one MMXU available for each configurable source (programmed in the **SETTINGS** ⇨⇩ **SYSTEM SETUP** ⇨⇩ **SIGNAL SOURCES** menu). MMXU1 provides data from G60 source 1, and MMXU2 provides data from G60 source 2.

MMXU data is provided in two forms: instantaneous and deadband. The instantaneous values are updated every time a read operation is performed by a client. The deadband values are calculated as described in IEC 61850 parts 7-1 and 7-3. The selection of appropriate deadband settings for the G60 is described in chapter 5 of this manual.

IEC 61850 buffered and unbuffered reporting capability is available in all MMXU logical nodes. MMXUx logical nodes provide the following data for each source:

- MMXU1.MX.TotW: three-phase real power
- MMXU1.MX.TotVAr: three-phase reactive power
- MMXU1.MX.TotVA: three-phase apparent power
- MMXU1.MX.TotPF: three-phase power factor
- MMXU1.MX.Hz: frequency
- MMXU1.MX.PPV.phsAB: phase AB voltage magnitude and angle
- MMXU1.MX.PPV.phsBC: phase BC voltage magnitude and angle
- MMXU1.MX.PPV.phsCA: Phase CA voltage magnitude and angle
- MMXU1.MX.PhV.phsA: phase AG voltage magnitude and angle
- MMXU1.MX.PhV.phsB: phase BG voltage magnitude and angle
- MMXU1.MX.PhV.phsC: phase CG voltage magnitude and angle
- MMXU1.MX.A.phsA: phase A current magnitude and angle
- MMXU1.MX.A.phsB: phase B current magnitude and angle
- MMXU1.MX.A.phsC: phase C current magnitude and angle
- MMXU1.MX.A.neut: ground current magnitude and angle
- MMXU1.MX.W.phsA: phase A real power
- MMXU1.MX.W.phsB: phase B real power
- MMXU1.MX.W.phsC: phase C real power
- MMXU1.MX.VAr.phsA: phase A reactive power
- MMXU1.MX.VAr.phsB: phase B reactive power
- MMXU1.MX.VAr.phsC: phase C reactive power
- MMXU1.MX.VA.phsA: phase A apparent power
- MMXU1.MX.VA.phsB: phase B apparent power
- MMXU1.MX.VA.phsC: phase C apparent power
- MMXU1.MX.PF.phsA: phase A power factor
- MMXU1.MX.PF.phsB: phase B power factor
- MMXU1.MX.PF.phsC: phase C power factor

C.2.7 PROTECTION AND OTHER LOGICAL NODES

The following list describes the protection elements for all UR-series relays. The G60 relay will contain a subset of protection elements from this list.

- PDIF: bus differential, transformer instantaneous differential, transformer percent differential, current differential

- PDIS: phase distance, ground distance
- PIOC: phase instantaneous overcurrent, neutral instantaneous overcurrent, ground instantaneous overcurrent, negative-sequence instantaneous overcurrent.
- PTOC: phase time overcurrent, neutral time overcurrent, ground time overcurrent, negative-sequence time overcurrent, neutral directional overcurrent, negative-sequence directional overcurrent
- PTUV: phase undervoltage, auxiliary undervoltage, third harmonic neutral undervoltage
- PTOV: phase overvoltage, neutral overvoltage, auxiliary overvoltage, negative sequence overvoltage
- RBRF: breaker failure
- RREC: autoreclosure
- RPSB: power swing detection
- RFLO: fault locator
- XCBR: breaker control
- XSWI: circuit switch
- CSWI: switch controller

The protection elements listed above contain *start* (pickup) and *operate* flags. For example, the start flag for PIOC1 is PIOC1.ST.Str.general. The operate flag for PIOC1 is PIOC1.ST.Op.general. For the G60 protection elements, these flags take their values from the pickup and operate FlexLogic operands for the corresponding element.

Some protection elements listed above contain directional start values. For example, the directional start value for PDIS1 is PDIS1.ST.Str.dirGeneral. This value is built from the directional FlexLogic operands for the element.

The RFLO logical node contains the measurement of the distance to fault calculation in kilometers. This value originates in the fault locator function.

The XCBR logical node is directly associated with the breaker control feature.

- XCBR1.ST.Loc: This is the state of the XCBR1 local/remote switch. A setting is provided to assign a FlexLogic operand to determine the state. When local mode is true, IEC 61850 client commands will be rejected.
- XCBR1.ST.Opcnt: This is an operation counter as defined in IEC 61850. Command settings are provided to allow the counter to be cleared.
- XCBR1.ST.Pos: This is the position of the breaker. The breaker control FlexLogic operands are used to determine this state.
  - Intermediate state (00) is indicated when the BREAKER 1 OPEN and BREAKER 1 CLOSED operands are both On.
  - Off state (01) is indicated when the BREAKER 1 OPEN operand is On.
  - On state (10) is indicated when the BREAKER 1 CLOSED operand is On.
  - Bad state (11) is indicated when the BREAKER 1 OPEN and BREAKER 1 CLOSED operands are Off.
- XCBR1.ST.BlkOpn: This is the state of the block open command logic. When true, breaker open commands from IEC 61850 clients will be rejected.
- XCBR1.ST.BlkCls: This is the state of the block close command logic. When true, breaker close commands from IEC 61850 clients will be rejected.
- XCBR1.CO.Pos: This is where IEC 61850 clients can issue open or close commands to the breaker. SBO control with normal security is the only supported IEC 61850 control model.
- XCBR1.CO.BlkOpn: This is where IEC 61850 clients can issue block open commands to the breaker. Direct control with normal security is the only supported IEC 61850 control model.
- XCBR1.CO.BlkCls: This is where IEC 61850 clients can issue block close commands to the breaker. Direct control with normal security is the only supported IEC 61850 control model.

C.3.1 BUFFERED/UNBUFFERED REPORTING

IEC 61850 buffered and unbuffered reporting is provided in the GGIO1 logical nodes (for binary status values) and MMXU1 to MMXU6 (for analog measured values). Report settings can be configured using an IEC 61850 client, substation configurator software, or via an IEC 61850 client. The following items can be configured:

- **TrgOps**: Trigger options. The following bits are supported by the G60:
  - Bit 1: data-change
  - Bit 4: integrity
  - Bit 5: general interrogation
- **OptFlds**: Option Fields. The following bits are supported by the G60:
  - Bit 1: sequence-number
  - Bit 2: report-time-stamp
  - Bit 3: reason-for-inclusion
  - Bit 4: data-set-name
  - Bit 5: data-reference
  - Bit 6: buffer-overflow (for buffered reports only)
  - Bit 7: entryID (for buffered reports only)
  - Bit 8: conf-revision
  - Bit 9: segmentation
- **IntgPd**: Integrity period.
- **BufTm**: Buffer time.

C.3.2 FILE TRANSFER

MMS file services are supported to allow transfer of oscillography, event record, or other files from a G60 relay.

C.3.3 TIMESTAMPS AND SCANNING

The timestamp values associated with all IEC 61850 data items represent the *time of the last change* of either the value or quality flags of the data item. To accomplish this functionality, all IEC 61850 data items must be regularly scanned for data changes, and the timestamp updated when a change is detected, regardless of the connection status of any IEC 61850 clients. For applications where there is no IEC 61850 client in use, the IEC 61850 **SERVER SCANNING** setting can be programmed as "Disabled". If a client is in use, this setting should be programmed as "Enabled" to ensure the proper generation of IEC 61850 timestamps.

C.3.4 LOGICAL DEVICE NAME

The logical device name is used to identify the IEC 61850 logical device that exists within the G60. This name is composed of two parts: the IED name setting and the logical device instance. The complete logical device name is the combination of the two character strings programmed in the **IEDNAME** and **LD INST** settings. The default values for these strings are "IEDName" and "LDInst". These values should be changed to reflect a logical naming convention for all IEC 61850 logical devices in the system.

C.3.5 LOCATION

The LPHD1 logical node contains a data attribute called *location* (LPHD1.DC.PhyNam.location). This is a character string meant to describe the physical location of the G60. This attribute is programmed through the **LOCATION** setting and its default value is "Location". This value should be changed to describe the actual physical location of the G60.

C.3.6 LOGICAL NODE NAME PREFIXES

IEC 61850 specifies that each logical node can have a name with a total length of 11 characters. The name is composed of:

- A five or six-character name prefix.
- A four-character standard name (for example, MMXU, GGIO, PIOC, etc.).
- A one or two-character instantiation index.

Complete names are of the form `xxxxxxPIOC1`, where the `xxxxxx` character string is configurable. Details regarding the logical node naming rules are given in IEC 61850 parts 6 and 7-2. It is recommended that a consistent naming convention be used for an entire substation project.

C.3.7 CONNECTION TIMING

A built-in TCP/IP connection timeout of two minutes is employed by the G60 to detect 'dead' connections. If there is no data traffic on a TCP connection for greater than two minutes, the connection will be aborted by the G60. This frees up the connection to be used by other clients. Therefore, when using IEC 61850 reporting, clients should configure report control block items such that an integrity report will be issued at least every two minutes (120000 ms). This ensures that the G60 will not abort the connection. If other MMS data is being polled on the same connection at least once every two minutes, this timeout will not apply.

C.3.8 NON-IEC 61850 DATA

The G60 relay makes available a number of non-IEC 61850 data items. These data items can be accessed through the "UR" MMS domain. IEC 61850 data can be accessed through the standard IEC 61850 logical device. To access the non-IEC data items, the **INCLUDE NON-IEC DATA** setting must be "Enabled".

C.3.9 COMMUNICATION SOFTWARE UTILITIES

The exact structure and values of the supported IEC 61850 logical nodes can be seen by connecting to a G60 relay with an MMS browser, such as the "MMS Object Explorer and AXS4-MMS" DDE/OPC server from Sisco Inc.

C.4.1 OVERVIEW

IEC 61850 specifies two types of peer-to-peer data transfer services: Generic Substation State Events (GSSE) and Generic Object Oriented Substation Events (GOOSE). GSSE services are compatible with UCA 2.0 GOOSE. IEC 61850 GOOSE services provide virtual LAN (VLAN) support, Ethernet priority tagging, and Ethertype Application ID configuration. The support for VLANs and priority tagging allows for the optimization of Ethernet network traffic. GOOSE messages can be given a higher priority than standard Ethernet traffic, and they can be separated onto specific VLANs. Because of the additional features of GOOSE services versus GSSE services, it is recommended that GOOSE be used wherever backwards compatibility with GSSE (or UCA 2.0 GOOSE) is not required.

Devices that transmit GSSE and/or GOOSE messages also function as servers. Each GSSE publisher contains a "GSSE control block" to configure and control the transmission. Each GOOSE publisher contains a "GOOSE control block" to configure and control the transmission. The transmission is also controlled via device settings. These settings can be seen in the ICD and/or SCD files, or in the device configuration software or files.

IEC 61850 recommends a default priority value of 4 for GOOSE. Ethernet traffic that does not contain a priority tag has a default priority of 1. More details are specified in IEC 61850 part 8-1.

IEC 61850 recommends that the Ethertype Application ID number be configured according to the GOOSE source. In the G60, the transmitted GOOSE Application ID number must match the configured receive Application ID number in the receiver. A common number may be used for all GOOSE transmitters in a system. More details are specified in IEC 61850 part 8-1.

C.4.2 GSSE CONFIGURATION

IEC 61850 Generic Substation Status Event (GSSE) communication is compatible with UCA GOOSE communication. GSSE messages contain a number of double point status data items. These items are transmitted in two pre-defined data structures named DNA and UserSt. Each DNA and UserSt item is referred to as a 'bit pair'. GSSE messages are transmitted in response to state changes in any of the data points contained in the message. GSSE messages always contain the same number of DNA and UserSt bit pairs. Depending the on the configuration, only some of these bit pairs may have values that are of interest to receiving devices.

The **GSSE FUNCTION**, **GSSE ID**, and **GSSE DESTINATION MAC ADDRESS** settings are used to configure GSSE transmission. **GSSE FUNCTION** is set to "Enabled" to enable the transmission. If a valid multicast Ethernet MAC address is entered for the **GSSE DESTINATION MAC ADDRESS** setting, this address will be used as the destination MAC address for GSSE messages. If a valid multicast Ethernet MAC address is not entered (for example, 00 00 00 00 00 00), the G60 will use the source Ethernet MAC address as the destination, with the multicast bit set.

C.4.3 FIXED GOOSE

The G60 supports two types of IEC 61850 Generic Object Oriented Substation Event (GOOSE) communication: fixed GOOSE and configurable GOOSE. All GOOSE messages contain IEC 61850 data collected into a *dataset*. It is this dataset that is transferred using GOOSE message services. The dataset transferred using the G60 fixed GOOSE is the same data that is transferred using the GSSE feature; that is, the DNA and UserSt bit pairs. The FlexLogic operands that determine the state of the DNA and UserSt bit pairs are configurable via settings, but the fixed GOOSE dataset always contains the same DNA/UserSt data structure. Upgrading from GSSE to GOOSE services is simply a matter of enabling fixed GOOSE and disabling GSSE. The remote inputs and outputs are configured in the same manner for both GSSE and fixed GOOSE.

It is recommended that the fixed GOOSE be used for implementations that require GOOSE data transfer between UR-series IEDs. Configurable GOOSE may be used for implementations that require GOOSE data transfer between UR-series IEDs and devices from other manufacturers.

C.4.4 CONFIGURABLE GOOSE

The configurable GOOSE feature allows for the configuration of the datasets to be transmitted or received from the G60. The G60 supports the configuration of eight transmission and reception datasets, allowing for the optimization of data transfer between devices.

Items programmed for dataset 1 and 2 will have changes in their status transmitted as soon as the change is detected. Dataset 1 should be used for high-speed transmission of data that is required for applications such as transfer tripping, blocking, and breaker fail initiate. At least one digital status value needs to be configured in dataset 1 to enable transmission of all data configured for dataset 1. Configuring analog data only to dataset 1 will not activate transmission.

Items programmed for datasets 3 through 8 will have changes in their status transmitted at a maximum rate of every 100 ms. Datasets 3 through 8 will regularly analyze each data item configured within them every 100 ms to identify if any changes have been made. If any changes in the data items are detected, these changes will be transmitted through a GOOSE message. If there are no changes detected during this 100 ms period, no GOOSE message will be sent.

For all datasets 1 through 8, the integrity GOOSE message will still continue to be sent at the pre-configured rate even if no changes in the data items are detected.

The GOOSE functionality was enhanced to prevent the relay from flooding a communications network with GOOSE messages due to an oscillation being created that is triggering a message.

The G60 has the ability of detecting if a data item in one of the GOOSE datasets is erroneously oscillating. This can be caused by events such as errors in logic programming, inputs improperly being asserted and de-asserted, or failed station components. If erroneously oscillation is detected, the G60 will stop sending GOOSE messages from the dataset for a minimum period of one second. Should the oscillation persist after the one second time-out period, the G60 will continue to block transmission of the dataset. The G60 will assert the **MAINTENANCE ALERT: GGIO Ind XXX oscill** self-test error message on the front panel display, where **XXX** denotes the data item detected as oscillating.

The configurable GOOSE feature is recommended for applications that require GOOSE data transfer between UR-series IEDs and devices from other manufacturers. Fixed GOOSE is recommended for applications that require GOOSE data transfer between UR-series IEDs.

IEC 61850 GOOSE messaging contains a number of configurable parameters, all of which must be correct to achieve the successful transfer of data. It is critical that the configured datasets at the transmission and reception devices are an exact match in terms of data structure, and that the GOOSE addresses and name strings match exactly. Manual configuration is possible, but third-party substation configuration software may be used to automate the process. The EnerVista UR Setup software can produce IEC 61850 ICD files and import IEC 61850 SCD files produced by a substation configurator (see the IEC 61850 IED configuration information later in this appendix).

NOTICE Use independent ports for IEC 61850 communication and take care when configuring the settings, else loss of protection or misoperation of the relay can result.

The following example illustrates the configuration required to transfer IEC 61850 data items between two devices. The general steps required for transmission configuration are:

1. Configure the transmission dataset.
2. Configure the GOOSE service settings.
3. Configure the data.

The general steps required for reception configuration are:

1. Configure the reception dataset.
2. Configure the GOOSE service settings.
3. Configure the data.

This example shows how to configure the transmission and reception of three IEC 61850 data items: a single point status value, its associated quality flags, and a floating point analog value.

The following procedure illustrates the transmission configuration.

1. Configure the transmission dataset by making the following changes in the **PRODUCT SETUP** ⇨⇩ **COMMUNICATION** ⇨⇩ **IEC 61850 PROTOCOL** ⇨ **GSSE/GOOSE CONFIGURATION** ⇨ **TRANSMISSION** ⇨⇩ **CONFIGURABLE GOOSE** ⇨ **CONFIGURABLE GOOSE 1** ⇨⇩ **CONFIG GSE 1 DATASET ITEMS** settings menu:
   - Set **ITEM 1** to “GGIO1.ST.Ind1.q” to indicate quality flags for GGIO1 status indication 1.
   - Set **ITEM 2** to “GGIO1.ST.Ind1.stVal” to indicate the status value for GGIO1 status indication 1.

   The transmission dataset now contains a set of quality flags and a single point status Boolean value. The reception dataset on the receiving device must exactly match this structure.

2. Configure the GOOSE service settings by making the following changes in the **PRODUCT SETUP ⇨⇩ COMMUNICATION ⇨⇩ IEC 61850 PROTOCOL ⇨ GSSE/GOOSE CONFIGURATION ⇨ TRANSMISSION ⇨⇩ CONFIGURABLE GOOSE ⇨ CONFIGURABLE GOOSE 1** settings menu:
   – Set **CONFIG GSE 1 FUNCTION** to "Enabled".
   – Set **CONFIG GSE 1 ID** to an appropriate descriptive string (the default value is "GOOSEOut_1").
   – Set **CONFIG GSE 1 DST MAC** to a multicast address (for example, 01 00 00 12 34 56).
   – Set the **CONFIG GSE 1 VLAN PRIORITY**; the default value of "4" is OK for this example.
   – Set the **CONFIG GSE 1 VLAN ID** value; the default value is "0", but some switches may require this value to be "1".
   – Set the **CONFIG GSE 1 ETYPE APPID** value. This setting represents the Ethertype application ID and must match the configuration on the receiver (the default value is "0").
   – Set the **CONFIG GSE 1 CONFREV** value. This value changes automatically as described in IEC 61850 part 7-2. For this example it can be left at its default value.
3. Configure the data by making the following changes in the **PRODUCT SETUP ⇨⇩ COMMUNICATION ⇨⇩ IEC 61850 PROTOCOL ⇨ GGIO1 STATUS CONFIGURATION** settings menu:
   – Set **GGIO1 INDICATION 1** to a FlexLogic operand used to provide the status of GGIO1.ST.Ind1.stVal (for example, a contact input, virtual input, a protection element status, etc.).

The G60 must be rebooted (control power removed and re-applied) before these settings take effect.

The following procedure illustrates the reception configuration.

1. Configure the reception dataset by making the following changes in the **PRODUCT SETUP ⇨⇩ COMMUNICATION ⇨⇩ IEC 61850 PROTOCOL ⇨ GSSE/GOOSE CONFIGURATION ⇨⇩ RECEPTION ⇨⇩ CONFIGURABLE GOOSE ⇨ CONFIGURABLE GOOSE 1 ⇨⇩ CONFIG GSE 1 DATASET ITEMS** settings menu:
   – Set **ITEM 1** to "GGIO3.ST.Ind1.q" to indicate quality flags for GGIO3 status indication 1.
   – Set **ITEM 2** to "GGIO3.ST.Ind1.stVal" to indicate the status value for GGIO3 status indication 1.

   The reception dataset now contains a set of quality flags, a single point status Boolean value, and a floating point analog value. This matches the transmission dataset configuration above.
2. Configure the GOOSE service settings by making the following changes in the **INPUTS/OUTPUTS ⇨⇩ REMOTE DEVICES ⇨⇩ REMOTE DEVICE 1** settings menu:
   – Set **REMOTE DEVICE 1 ID** to match the GOOSE ID string for the transmitting device. Enter "GOOSEOut_1".
   – Set **REMOTE DEVICE 1 ETYPE APPID** to match the Ethertype application ID from the transmitting device. This is "0" in the example above.
   – Set the **REMOTE DEVICE 1 DATASET** value. This value represents the dataset number in use. Since we are using configurable GOOSE 1 in this example, program this value as "GOOSEIn 1".
3. Configure the data by making the following changes in the **INPUTS/OUTPUTS ⇨⇩ REMOTE INPUTS ⇨⇩ REMOTE INPUT 1** settings menu:
   – Set **REMOTE IN 1 DEVICE** to "GOOSEOut_1".
   – Set **REMOTE IN 1 ITEM** to "Dataset Item 2". This assigns the value of the GGIO3.ST.Ind1.stVal single point status item to remote input 1.

Remote input 1 can now be used in FlexLogic equations or other settings. The G60 must be rebooted (control power removed and re-applied) before these settings take effect.

The value of remote input 1 (Boolean on or off) in the receiving device will be determined by the GGIO1.ST.Ind1.stVal value in the sending device. The above settings will be automatically populated by the EnerVista UR Setup software when a complete SCD file is created by third party substation configurator software.

C.4.5 ETHERNET MAC ADDRESS FOR GSSE/GOOSE

Ethernet capable devices each contain a unique identifying address called a Media Access Control (MAC) address. This address cannot be changed and is unique for each Ethernet device produced worldwide. The address is six bytes in length and is usually represented as six hexadecimal values (for example, 00 A0 F4 01 02 03). It is used in all Ethernet frames as the 'source' address of the frame. Each Ethernet frame also contains a *destination* address. The destination address can be different for each Ethernet frame depending on the intended destination of the frame.

A special type of destination address called a *multicast* address is used when the Ethernet frame can be received by more than one device. An Ethernet MAC address is multicast when the least significant bit of the first byte is set (for example, 01 00 00 00 00 00 is a multicast address).

GSSE and GOOSE messages must have multicast destination MAC addresses.

By default, the G60 is configured to use an automated multicast MAC scheme. If the G60 destination MAC address setting is not a valid multicast address (that is, the least significant bit of the first byte is not set), the address used as the destination MAC will be the same as the local MAC address, but with the multicast bit set. Thus, if the local MAC address is 00 A0 F4 01 02 03, then the destination MAC address will be 01 A0 F4 01 02 03.

C.4.6 GSSE ID AND GOOSE ID SETTINGS

GSSE messages contain an identifier string used by receiving devices to identify the sender of the message, defined in IEC 61850 part 8-1 as GsID. This is a programmable 65-character string. This string should be chosen to provide a descriptive name of the originator of the GSSE message.

GOOSE messages contain an identifier string used by receiving devices to identify the sender of the message, defined in IEC 61850 part 8-1 as GoID. This programmable 65-character string should be a descriptive name of the originator of the GOOSE message. GOOSE messages also contain two additional character strings used for identification of the message: DatSet - the name of the associated dataset, and GoCBRef - the reference (name) of the associated GOOSE control block. These strings are automatically populated and interpreted by the G60; no settings are required.

C.5.1 OVERVIEW

The G60 can be configured for IEC 61850 via the EnerVista UR Setup software as follows.

1. An ICD file is generated for the G60 by the EnerVista UR Setup software that describe the capabilities of the IED.
2. The ICD file is then imported into a system configurator along with other ICD files for other IEDs (from GE or other vendors) for system configuration.
3. The result is saved to a SCD file, which is then imported back to EnerVista UR Setup to create one or more settings file(s). The settings file(s) can then be used to update the relay(s) with the new configuration information.

The configuration process is illustrated below.

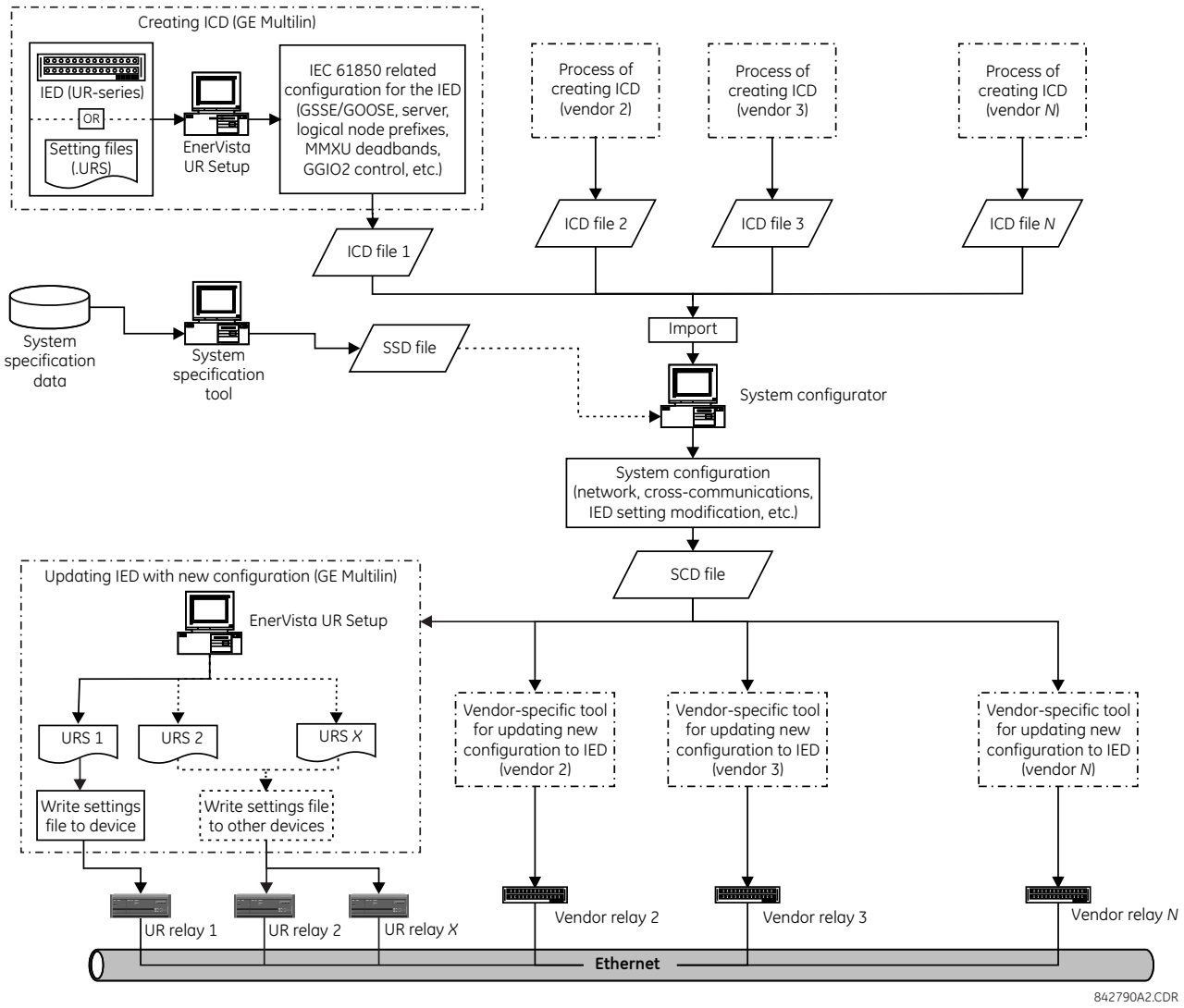

Figure C–2: IED CONFIGURATION PROCESS

The following acronyms and abbreviations are used in the procedures describing the IED configuration process for IEC 61850:

- BDA: Basic Data Attribute, that is not structured
- DAI: Instantiated Data Attribute
- DO: Data Object type or instance, depending on the context

- DOI: Instantiated Data Object
- IED: Intelligent Electronic Device
- LDInst: Instantiated Logical Device
- LNInst: Instantiated Logical Node
- SCL: Substation Configuration Description Language. The configuration language is an application of the Extensible Markup Language (XML) version 1.0.
- SDI: Instantiated Sub DATA; middle name part of a structured DATA name
- UR: GE Multilin Universal Relay series
- URI: Universal Resource Identifier
- URS: UR-series relay setting file
- XML: Extensible Markup Language

The following SCL variants are also used:

- ICD: IED Capability Description
- CID: Configured IED Description
- SSD: System Specification Description
- SCD: Substation Configuration Description

The following IEC related tools are referenced in the procedures that describe the IED configuration process for IEC 61850:

- **System configurator** or **Substation configurator**: This is an IED independent system level tool that can import or export configuration files defined by IEC 61850-6. It can import configuration files (ICD) from several IEDs for system level engineering and is used to add system information shared by different IEDs. The system configuration generates a substation related configuration file (SCD) which is fed back to the IED configurator (for example, EnerVista UR Setup) for system related IED configuration. The system configurator should also be able to read a system specification file (SSD) to use as base for starting system engineering, or to compare it with an engineered system for the same substation.
- **IED configurator**: This is a vendor specific tool that can directly or indirectly generate an ICD file from the IED (for example, from a settings file). It can also import a system SCL file (SCD) to set communication configuration parameters (that is, required addresses, reception GOOSE datasets, IDs of incoming GOOSE datasets, etc.) for the IED. The IED configurator functionality is implemented in the EnerVista UR Setup software.

C.5.2 CONFIGURING IEC 61850 SETTINGS

Before creating an ICD file, the user can customize the IEC 61850 related settings for the IED. For example, the IED name and logical device instance can be specified to uniquely identify the IED within the substation, or transmission GOOSE datasets created so that the system configurator can configure the cross-communication links to send GOOSE messages from the IED. Once the IEC 61850 settings are configured, the ICD creation process will recognize the changes and generate an ICD file that contains the updated settings.

Some of the IED settings will be modified during they system configuration process. For example, a new IP address may be assigned, line items in a Transmission GOOSE dataset may be added or deleted, or prefixes of some logical nodes may be changed. While all new configurations will be mapped to the G60 settings file when importing an SCD file, all unchanged settings will preserve the same values in the new settings file.

These settings can be configured either directly through the relay panel or through the EnerVista UR Setup software (preferred method). The full list of IEC 61850 related settings for are as follows:

- Network configuration: IP address, IP subnet mask, and default gateway IP address (access through the **Settings > Product Setup > Communications > Network** menu tree in EnerVista UR Setup).
- Server configuration: IED name and logical device instance (access through the **Settings > Product Setup > Communications > IEC 61850 > Server Configuration** menu tree in EnerVista UR Setup).
- Logical node prefixes, which includes prefixes for all logical nodes except LLN0 (access through the **Settings > Product Setup > Communications > IEC 61850 > Logical Node Prefixes** menu tree in EnerVista UR Setup).

- MMXU deadbands, which includes deadbands for all available MMXUs. The number of MMXUs is related to the number of CT/VT modules in the relay. There are two MMXUs for each CT/VT module. For example, if a relay contains two CT/VT modules, there will be four MMXUs available (access through the **Settings > Product Setup > Communications > IEC 61850 > MMXU Deadbands** menu tree in EnerVista UR Setup).
- GGIO1 status configuration, which includes the number of status points in GGIO1 as well as the potential internal mappings for each GGIO1 indication. However only the number of status points will be used in the ICD creation process (access through the **Settings > Product Setup > Communications > IEC 61850 > GGIO1 Status Configuration** menu tree in EnerVista UR Setup).
- GGIO2 control configuration, which includes ctlModels for all SPCSOs within GGIO2 (access through the **Settings > Product Setup > Communications > IEC 61850 > GGIO2 Control Configuration** menu tree in EnerVista UR Setup).
- Configurable transmission GOOSE, which includes eight configurable datasets that can be used for GOOSE transmission. The GOOSE ID can be specified for each dataset (it must be unique within the IED as well as across the whole substation), as well as the destination MAC address, VLAN priority, VLAN ID, ETYPE APPID, and the dataset items. The selection of the dataset item is restricted by firmware version; for version 7.2x, only GGIO1.ST.Indx.stVal and GGIO1.ST.Indx.q are valid selection (where *x* is between 1 to *N*, and *N* is determined by number of GGIO1 status points). Although configurable transmission GOOSE can also be created and altered by some third-party system configurators, we recommend configuring transmission GOOSE for GE Multilin IEDs before creating the ICD, and strictly within EnerVista UR Setup software or the front panel display (access through the **Settings > Product Setup > Communications > IEC 61850 > GSSE/GOOSE Configuration > Transmission > Tx Configurable GOOSE** menu tree in EnerVista UR Setup).
- Configurable reception GOOSE, which includes eight configurable datasets that can be used for GOOSE reception. However, unlike datasets for transmission, datasets for reception only contains dataset items, and they are usually created automatically by process of importing the SCD file (access through the **Settings > Product Setup > Communications > IEC 61850 > GSSE/GOOSE Configuration > Reception > Rx Configurable GOOSE** menu tree in EnerVista UR Setup).
- Remote devices configuration, which includes remote device ID (GOOSE ID or GoID of the incoming transmission GOOSE dataset), ETYPE APPID (of the GSE communication block for the incoming transmission GOOSE), and DATASET (which is the name of the associated reception GOOSE dataset). These settings are usually done automatically by process of importing SCD file (access through the **Settings > Inputs/Outputs > Remote Devices** menu tree in EnerVista UR Setup).
- Remote inputs configuration, which includes device (remote device ID) and item (which dataset item in the associated reception GOOSE dataset to map) values. Only the items with cross-communication link created in SCD file should be mapped. These configurations are usually done automatically by process of importing SCD file (access through the **Settings > Inputs/Outputs > Remote Inputs** menu tree in EnerVista UR Setup).

C.5.3 ABOUT ICD FILES

The SCL language is based on XML, and its syntax definition is described as a W3C XML Schema. ICD is one type of SCL file (which also includes SSD, CID and SCD files). The ICD file describes the capabilities of an IED and consists of four major sections:

- Header
- Communication
- IEDs
- DataTypeTemplates

The root file structure of an ICD file is illustrated below.

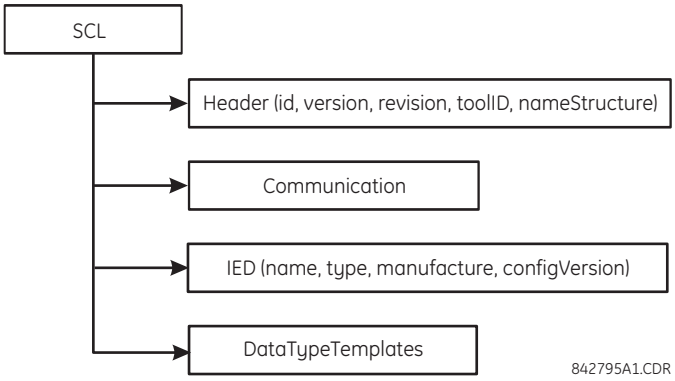

Figure C–3: ICD FILE STRUCTURE, SCL (ROOT) NODE

The **Header** node identifies the ICD file and its version, and specifies options for the mapping of names to signals

The **Communication** node describes the direct communication connection possibilities between logical nodes by means of logical buses (sub-networks) and IED access ports. The communication section is structured as follows.

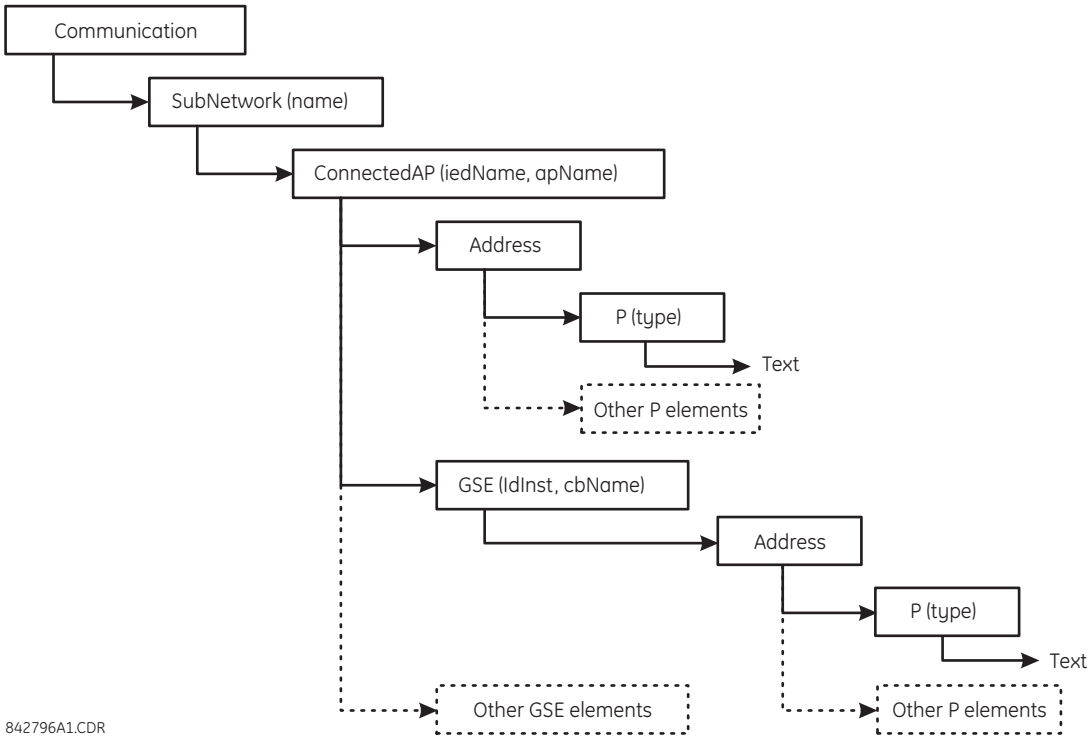

Figure C–4: ICD FILE STRUCTURE, COMMUNICATIONS NODE

The **SubNetwork** node contains all access points which can (logically) communicate with the sub-network protocol and without the intervening router. The **ConnectedAP** node describes the IED access point connected to this sub-network. The **Address** node contains the address parameters of the access point. The **GSE** node provides the address element for stating the control block related address parameters, where **IdInst** is the instance identification of the logical device within the IED on which the control block is located, and **cbName** is the name of the control block.

The **IED** node describes the (pre-)configuration of an IED: its access points, the logical devices, and logical nodes instantiated on it. Furthermore, it defines the capabilities of an IED in terms of communication services offered and, together with its **LNType**, instantiated data (DO) and its default or configuration values. There should be only one IED section in an ICD since it only describes one IED.

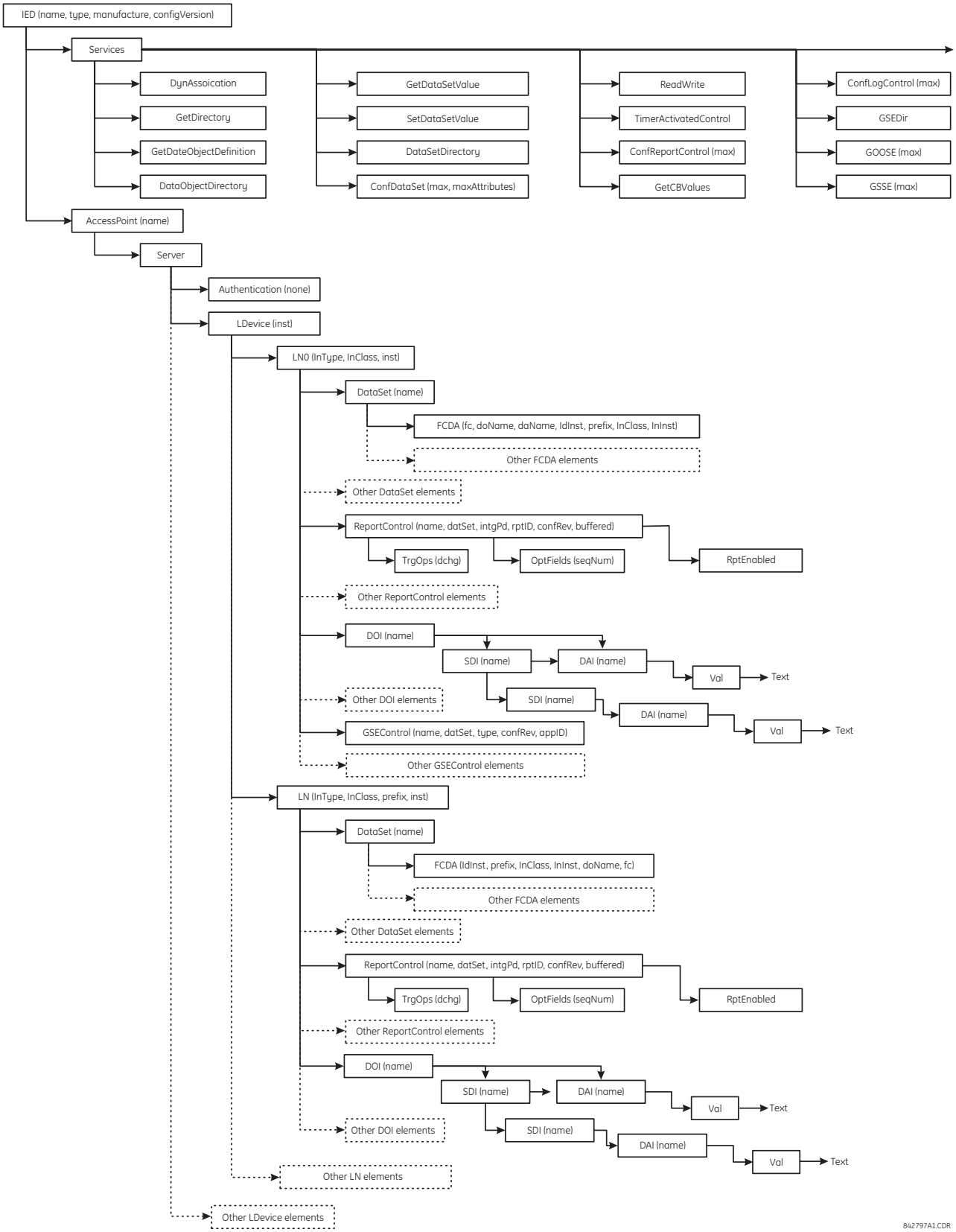

Figure C–5: ICD FILE STRUCTURE, IED NODE

The **DataTypeTemplates** node defines instantiable logical node types. A logical node type is an instantiable template of the data of a logical node. A **LnodeType** is referenced each time that this instantiable type is needed with an IED. A logical node type template is built from DATA (DO) elements, which again have a DO type, which is derived from the DATA classes (CDC). DOs consist of attributes (DA) or of elements of already defined DO types (SDO). The attribute (DA) has a functional constraint, and can either have a basic type, be an enumeration, or a structure of a **DAType**. The DAType is built from BDA elements, defining the structure elements, which again can be **BDA** elements of have a base type such as DA.

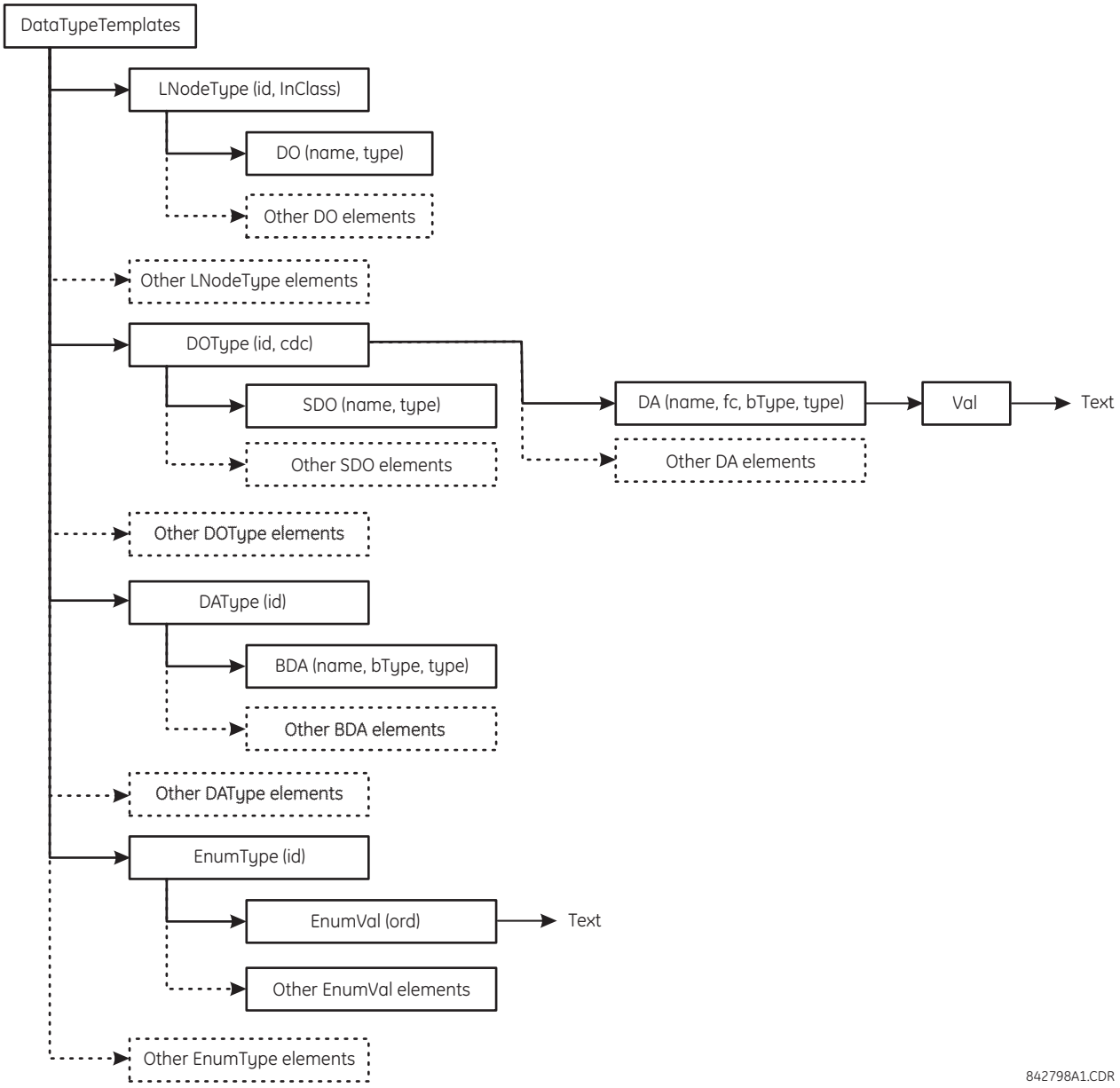

Figure C–6: ICD FILE STRUCTURE, DATATYPETEMPLATES NODE

C.5.4 CREATING AN ICD FILE WITH ENERVISTA UR SETUP

An ICD file can be created directly from a connected G60 IED or from an offline G60 settings file with the EnerVista UR Setup software using the following procedure:

1. Right-click the connected UR-series relay or settings file and select **Create ICD File**.

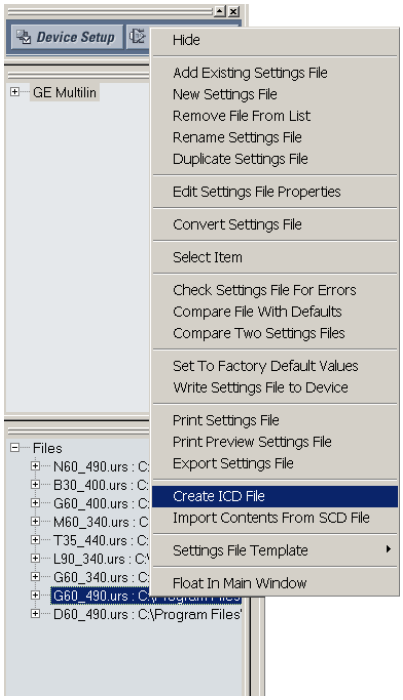

2. The EnerVista UR Setup will prompt to save the file. Select the file path and enter the name for the ICD file, then click **OK** to generate the file.

The time to create an ICD file from the offline G60 settings file is typically much quicker than create an ICD file directly from the relay.

C.5.5 ABOUT SCD FILES

System configuration is performed in the system configurator. While many vendors (including GE Multilin) are working their own system configuration tools, there are some system configurators available in the market (for example, Siemens DIGSI version 4.6 or above and ASE Visual SCL Beta 0.12).

Although the configuration tools vary from one vendor to another, the procedure is pretty much the same. First, a substation project must be created, either as an empty template or with some system information by importing a system specification file (SSD). Then, IEDs are added to the substation. Since each IED is represented by its associated ICD, the ICD files are imported into the substation project, and the system configurator validates the ICD files during the importing process. If the ICD files are successfully imported into the substation project, it may be necessary to perform some additional minor steps to attach the IEDs to the substation (see the system configurator manual for details).

Once all IEDs are inserted into the substation, further configuration is possible, such as:

- Assigning network addresses to individual IEDs.
- Customizing the prefixes of logical nodes.
- Creating cross-communication links (configuring GOOSE messages to send from one IED to others).

When system configurations are complete, the results are saved to an SCD file, which contains not only the configuration for each IED in the substation, but also the system configuration for the entire substation. Finally, the SCD file is passed back to the IED configurator (vendor specific tool) to update the new configuration into the IED.

The SCD file consists of at least five major sections:

- Header.
- Substation.
- Communication.
- IED section (one or more).
- DataTypeTemplates.

The root file structure of an SCD file is illustrated below.

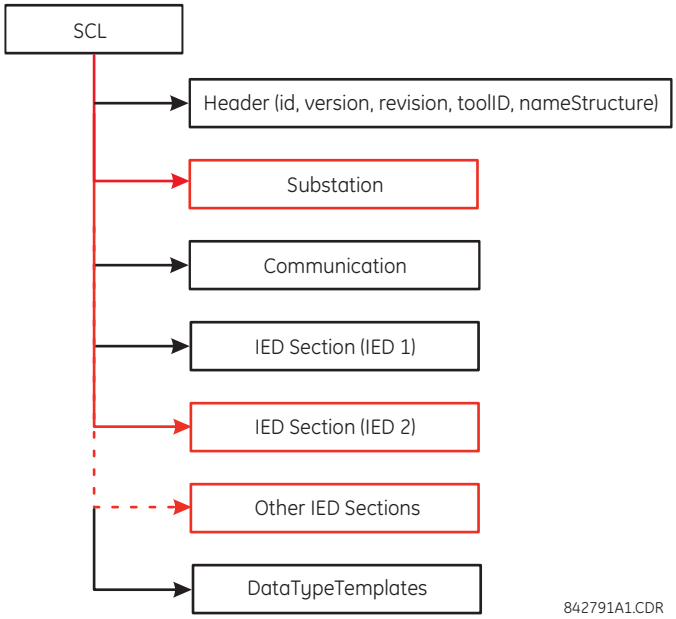

Figure C–7: SCD FILE STRUCTURE, SCL (ROOT) NODE

Like ICD files, the **Header** node identifies the SCD file and its version, and specifies options for the mapping of names to signals.

The **Substation** node describes the substation parameters:

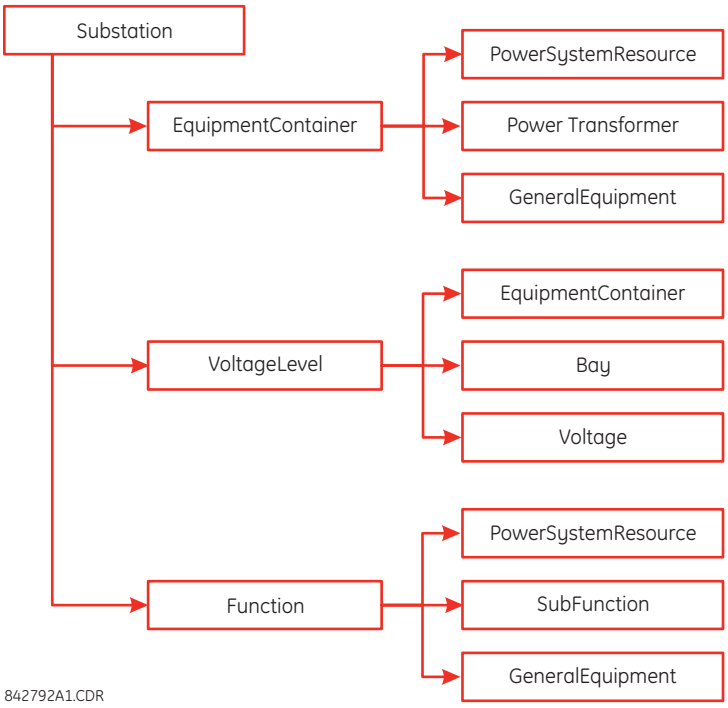

Figure C–8: SCD FILE STRUCTURE, SUBSTATION NODE

The **Communication** node describes the direct communication connection possibilities between logical nodes by means of logical buses (sub-networks) and IED access ports. The communication section is structured as follows.

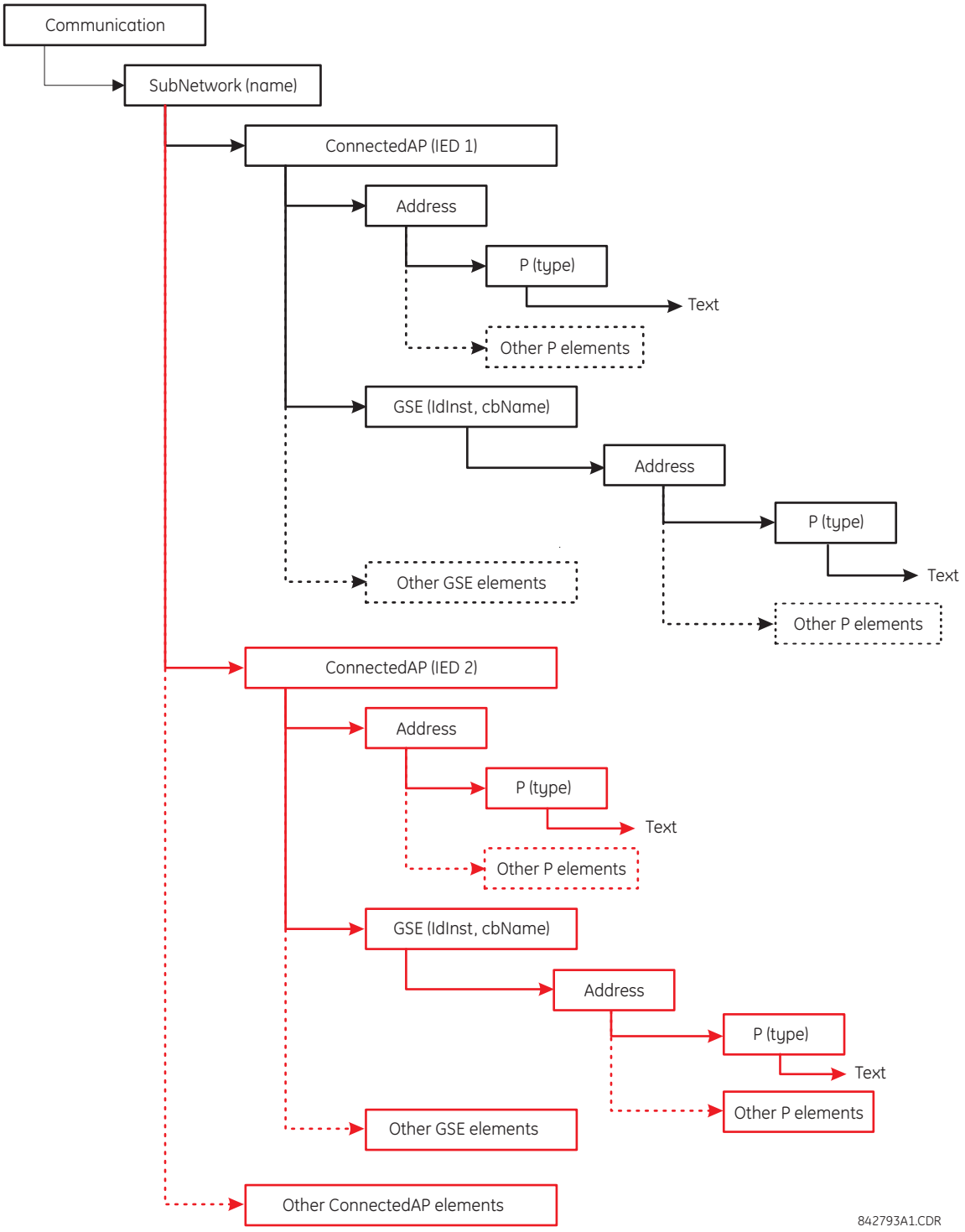

Figure C–9: SCD FILE STRUCTURE, COMMUNICATIONS NODE

The **SubNetwork** node contains all access points which can (logically) communicate with the sub-network protocol and without the intervening router. The **ConnectedAP** node describes the IED access point connected to this sub-network. The **Address** node contains the address parameters of the access point. The **GSE** node provides the address element for stating the control block related address parameters, where **ldInst** is the instance identification of the logical device within the IED on which the control block is located, and **cbName** is the name of the control block.

The **IED Section** node describes the configuration of an IED.

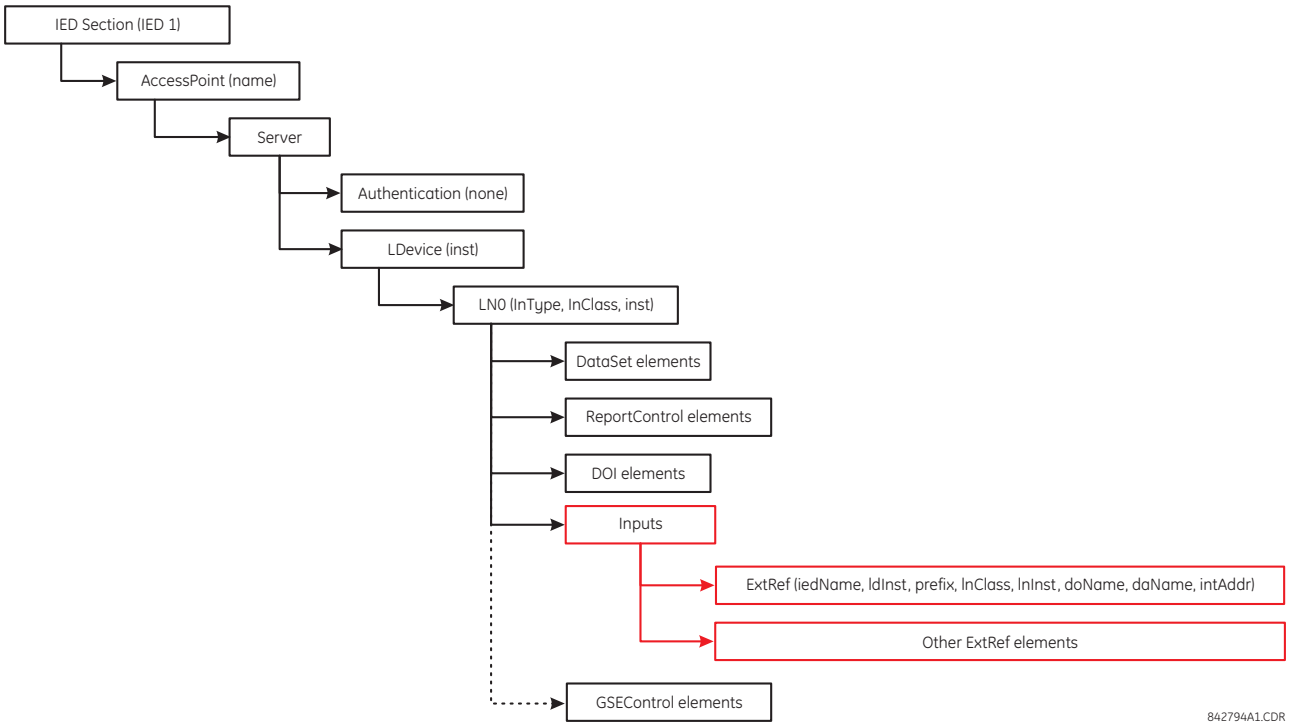

Figure C–10: SCD FILE STRUCTURE, IED NODE

C.5.6 IMPORTING AN SCD FILE WITH ENERVISTA UR SETUP

The following procedure describes how to update the G60 with the new configuration from an SCD file with the EnerVista UR Setup software.

1. Right-click anywhere in the files panel and select the **Import Contents From SCD File** item.

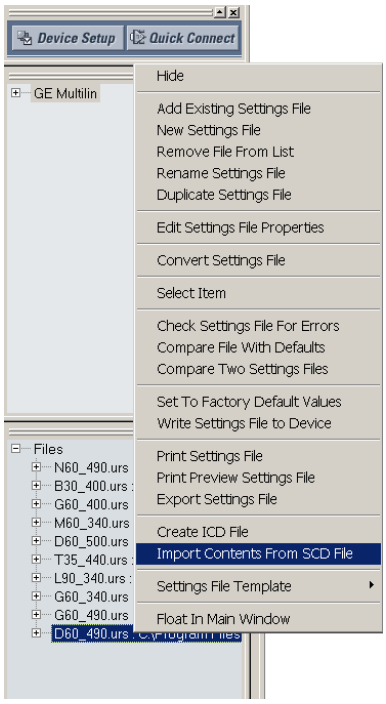

2. Select the saved SCD file and click **Open**.
3. The software will open the SCD file and then prompt the user to save a UR-series settings file. Select a location and name for the URS (UR-series relay settings) file.

   If there is more than one GE Multilin IED defined in the SCD file, the software prompt the user to save a UR-series settings file for each IED.
4. After the URS file is created, modify any settings (if required).
5. To update the relay with the new settings, right-click on the settings file in the settings tree and select the **Write Settings File to Device** item.
6. The software will prompt for the target device. Select the target device from the list provided and click **Send**. The new settings will be updated to the selected device.

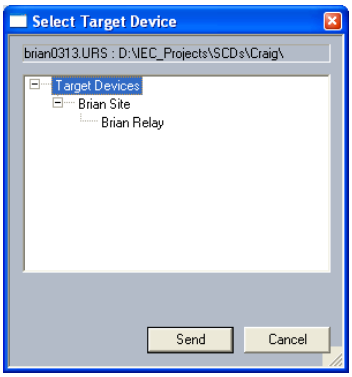

C.6.1 ACSI BASIC CONFORMANCE STATEMENT

SERVICES		SERVER/ PUBLISHER	UR-FAMILY
CLIENT-SERVER ROLES			
B11	**Server** side (of Two-party Application-Association)	**c1**	**Yes**
B12	**Client** side (of Two-party Application-Association)	**---**	
SCSMS SUPPORTED			
B21	**SCSM**: IEC 61850-8-1 used		**Yes**
B22	**SCSM**: IEC 61850-9-1 used		
B23	**SCSM**: IEC 61850-9-2 used		
B24	**SCSM**: other		
GENERIC SUBSTATION EVENT MODEL (GSE)			
B31	**Publisher** side	**O**	**Yes**
B32	**Subscriber** side	**---**	**Yes**
TRANSMISSION OF SAMPLED VALUE MODEL (SVC)			
B41	**Publisher** side	**O**	
B42	**Subscriber** side	**---**	

NOTE

c1: shall be "M" if support for LOGICAL-DEVICE model has been declared
O: Optional
M: Mandatory

C.6.2 ACSI MODELS CONFORMANCE STATEMENT

SERVICES		SERVER/ PUBLISHER	UR-FAMILY
IF SERVER SIDE (B11) SUPPORTED			
M1	**Logical device**	**c2**	**Yes**
M2	**Logical node**	**c3**	**Yes**
M3	**Data**	**c4**	**Yes**
M4	**Data set**	**c5**	**Yes**
M5	**Substitution**	**O**	
M6	**Setting group control**	**O**	
	REPORTING		
M7	**Buffered report control**	**O**	**Yes**
M7-1	sequence-number		
M7-2	report-time-stamp		
M7-3	reason-for-inclusion		
M7-4	data-set-name		
M7-5	data-reference		
M7-6	buffer-overflow		
M7-7	entryID		
M7-8	BufTm		
M7-9	IntgPd		
M7-10	GI		
M8	**Unbuffered report control**	**O**	**Yes**
M8-1	sequence-number		
M8-2	report-time-stamp		
M8-3	reason-for-inclusion		

SERVICES		SERVER/ PUBLISHER	UR-FAMILY
M8-4	data-set-name		
M8-5	data-reference		
M8-6	BufTm		
M8-7	IntgPd		
M8-8	GI		
	Logging	**O**	
M9	**Log control**	**O**	
M9-1	IntgPd		
M10	**Log**	**O**	
M11	**Control**	**M**	**Yes**
IF GSE (B31/32) IS SUPPORTED			
	GOOSE	**O**	**Yes**
M12-1	entryID		
M12-2	DataRefInc		
M13	**GSSE**	**O**	**Yes**
IF SVC (B41/B42) IS SUPPORTED			
M14	Multicast SVC	**O**	
M15	Unicast SVC	**O**	
M16	**Time**	**M**	**Yes**
M17	**File transfer**	**O**	**Yes**

NOTE

c2: shall be "M" if support for LOGICAL-NODE model has been declared
c3: shall be "M" if support for DATA model has been declared
c4: shall be "M" if support for DATA-SET, Substitution, Report, Log Control, or Time models has been declared
c5: shall be "M" if support for Report, GSE, or SMV models has been declared
M: Mandatory

C.6.3 ACSI SERVICES CONFORMANCE STATEMENT

In the table below, the acronym AA refers to Application Associations (TP: Two Party / MC: Multicast). The c6 to c10 entries are defined in the notes following the table.

SERVICES		AA: TP/MC	SERVER/ PUBLISHER	UR FAMILY
SERVER (CLAUSE 7)				
S1	ServerDirectory	TP	M	Yes
APPLICATION ASSOCIATION (CLAUSE 8)				
S2	Associate	TP	M	Yes
S3	Abort	TP	M	Yes
S4	Release	TP	M	Yes
LOGICAL DEVICE (CLAUSE 9)				
S5	LogicalDeviceDirectory	TP	M	Yes
LOGICAL NODE (CLAUSE 10)				
S6	LogicalNodeDirectory	TP	M	Yes
S7	GetAllDataValues	TP	M	Yes
DATA (CLAUSE 11)				
S8	GetDataValues	TP	M	Yes
S9	SetDataValues	TP	O	Yes
S10	GetDataDirectory	TP	M	Yes
S11	GetDataDefinition	TP	M	Yes

SERVICES		AA: TP/MC	SERVER/ PUBLISHER	UR FAMILY
DATA SET (CLAUSE 12)				
S12	GetDataSetValues	TP	M	Yes
S13	SetDataSetValues	TP	O	
S14	CreateDataSet	TP	O	
S15	DeleteDataSet	TP	O	
S16	GetDataSetDirectory	TP	O	Yes
SETTING GROUP CONTROL (CLAUSE 16)				
S18	SelectActiveSG	TP	O	
S19	SelectEditSG	TP	O	
S20	SetSGValues	TP	O	
S21	ConfirmEditSGValues	TP	O	
S22	GetSGValues	TP	O	
S23	GetSGCBValues	TP	O	
REPORTING (CLAUSE 17)				
	BUFFERED REPORT CONTROL BLOCK (BRCB)			
S24	Report	TP	c6	Yes
S24-1	data-change (dchg)			Yes
S24-2	qchg-change (qchg)			
S24-3	data-update (dupd)			
S25	GetBRCBValues	TP	c6	Yes
S26	SetBRCBValues	TP	c6	Yes
	UNBUFFERED REPORT CONTROL BLOCK (URCB)			
S27	Report	TP	c6	Yes
S27-1	data-change (dchg)			Yes
S27-2	qchg-change (qchg)			
S27-3	data-update (dupd)			
S28	GetURCBValues	TP	c6	Yes
S29	SetURCBValues	TP	c6	Yes
LOGGING (CLAUSE 17)				
	LOG CONTROL BLOCK			
S30	GetLCBValues	TP	M	
S31	SetLCBValues	TP	M	
	LOG			
S32	QueryLogByTime	TP	M	
S33	QueryLogByEntry	TP	M	
S34	GetLogStatusValues	TP	M	
GENERIC SUBSTATION EVENT MODEL (GSE) (CLAUSE 18, ANNEX C)				
	GOOSE-CONTROL-BLOCK (CLAUSE 18)			
S35	SendGOOSEMessage	MC	c8	Yes
S36	GetReference	TP	c9	
S37	GetGOOSEElementNumber	TP	c9	
S38	GetGoCBValues	TP	O	Yes
S39	SetGoCBValues	TP	O	Yes
	GSSE-CONTROL-BLOCK (ANNEX C)			
S40	SendGSSEMessage	MC	c8	Yes
S41	GetReference	TP	c9	
S42	GetGSSEElementNumber	TP	c9	
S43	GetGsCBValues	TP	O	Yes

SERVICES		AA: TP/MC	SERVER/ PUBLISHER	UR FAMILY
S44	SetGsCBValues	TP	O	Yes
TRANSMISSION OF SAMPLED VALUE MODEL (SVC) (CLAUSE 19)				
	MULTICAST SVC			
S45	SendMSVMessage	MC	c10	
S46	GetMSVCBValues	TP	O	
S47	SetMSVCBValues	TP	O	
	UNICAST SVC			
S48	SendUSVMessage	MC	c10	
S49	GetUSVCBValues	TP	O	
S50	SetUSVCBValues	TP	O	
CONTROL (CLAUSE 20)				
S51	Select		O	Yes
S52	SelectWithValue	TP	O	
S53	Cancel	TP	O	Yes
S54	Operate	TP	M	Yes
S55	Command-Termination	TP	O	
S56	TimeActivated-Operate	TP	O	
FILE TRANSFER (CLAUSE 23)				
S57	GetFile	TP	M	Yes
S58	SetFile	TP	O	
S59	DeleteFile	TP	O	
S60	GetFileAttributeValues	TP	M	Yes
TIME (CLAUSE 5.5)				
T1	Time resolution of internal clock (nearest negative power of 2 in seconds)			20
T2	Time accuracy of internal clock			SNTP, IRIG-B
T3	Supported TimeStamp resolution (nearest value of 2^{-n} in seconds, according to 6.1.2.9.3.2)			20

NOTE

c6: shall declare support for at least one (BRCB or URCB)
c7: shall declare support for at least one (QueryLogByTime or QueryLogAfter)
c8: shall declare support for at least one (SendGOOSEMessage or SendGSSEMessage)
c9: shall declare support if TP association is available
c10: shall declare support for at least one (SendMSVMessage or SendUSVMessage)

C.7.1 LOGICAL NODES TABLE

The UR-series of relays supports IEC 61850 logical nodes as indicated in the following table. Note that the actual instantiation of each logical node is determined by the product order code. For example. the logical node “PDIS” (distance protection) is available only in the D60 Line Distance Relay.

Table C–1: IEC 61850 LOGICAL NODES (Sheet 1 of 4)

NODES	UR-FAMILY
L: SYSTEM LOGICAL NODES	
LPHD: Physical device information	Yes
LLN0: Logical node zero	Yes
LCCH: Physical communication channel supervision	---
LGOS: GOOSE subscription	---
LSVS: Sampled value subscription	---
LTIM: Time management	---
LTMS: Time master supervision	---
LTRK: Service tracking	---
A: LOGICAL NODES FOR AUTOMATIC CONTROL	
ANCR: Neutral current regulator	---
ARCO: Reactive power control	---
ATCC: Automatic tap changer controller	---
AVCO: Voltage control	---
C: LOGICAL NODES FOR CONTROL	
CALH: Alarm handling	---
CCGR: Cooling group control	---
CILO: Interlocking	---
CPOW: Point-on-wave switching	---
CSWI: Switch controller	Yes
CSYN: Synchronizer controller	---
F: LOGICAL NODES FOR FUNCTIONAL BLOCKS	
FCNT: Counter	---
FCSD: Curve shape description	---
FFIL: Generic filler	---
FLIM: Control function output limitation	---
FPID: PID regulator	---
FRMP: Ramp function	---
FSPT: Set-point control function	---
FXOT: Action at over threshold	---
FXUT: Action at under threshold	---
G: LOGICAL NODES FOR GENERIC REFERENCES	
GAPC: Generic automatic process control	---
GGIO: Generic process I/O	Yes
GLOG: Generic log	---
GSAL: Generic security application	---
I: LOGICAL NODES FOR INTERFACING AND ARCHIVING	
IARC: Archiving	---
IHMI: Human machine interface	---
ISAF: Safety alarm function	---
ITCI: Telecontrol interface	---
ITMI: Telemonitoring interface	---

Table C–1: IEC 61850 LOGICAL NODES (Sheet 2 of 4)

NODES	UR-FAMILY
ITPC: Teleprotection communication interfaces	---
K: LOGICAL NODES FOR MECHANICAL AND NON-ELECTRIC PRIMARY EQUIPMENT	
KFAN: Fan	---
KFIL: Filter	---
KPMP: Pump	---
KTNK: Tank	---
KVLV: Valve control	---
M: LOGICAL NODES FOR METERING AND MEASUREMENT	
MENV: Environmental information	---
MFLK: Flicker measurement name	---
MHAI: Harmonics or interharmonics	---
MHAN: Non phase related harmonics or interharmonics	---
MHYD: Hydrological information	---
MMDC: DC measurement	---
MMET: Meteorological information	---
MMTN: Metering	---
MMTR: Metering	---
MMXN: Non-phase-related measurement	Yes
MMXU: Measurement	Yes
MSQI: Sequence and imbalance	Yes
MSTA: Metering statistics	---
P: LOGICAL NODES FOR PROTECTION FUNCTIONS	
PDIF: Differential	Yes
PDIR: Direction comparison	---
PDIS: Distance	Yes
PDOP: Directional overpower	---
PDUP: Directional underpower	---
PFRC: Rate of change of frequency	---
PHAR: Harmonic restraint	---
PHIZ: Ground detector	---
PIOC: Instantaneous overcurrent	Yes
PMRI Motor restart inhibition	---
PMSS: Motor starting time supervision	---
POPF: Over power factor	---
PPAM: Phase angle measuring	---
PRTR: Rotor protection	---
PSCH: Protection scheme	---
PSDE: Sensitive directional earth fault	---
PTEF: Transient earth fault	---
PTOC: Time overcurrent	Yes
PTOF: Overfrequency	---
PTOV: Overvoltage	Yes
PTRC: Protection trip conditioning	Yes
PTTR: Thermal overload	---
PTUC: Undercurrent	---
PTUF: Underfrequency	---
PTUV: Undervoltage	Yes

Table C–1: IEC 61850 LOGICAL NODES (Sheet 3 of 4)

NODES	UR-FAMILY
PUPF: Underpower factor	---
PVOC: Voltage controlled time overcurrent	---
PVPH: Volts per Hz	---
PZSU: Zero speed or underspeed	---
Q: LOGICAL NODES FOR POWER QUALITY EVENTS	
QFVR: Frequency variation	---
QITR: Current transient	---
QIUB: Current unbalance variation	---
QVTR: Voltage transient	---
QVUB: Voltage unbalance variation	---
QVVR: Voltage variation	---
R: LOGICAL NODES FOR PROTECTION-RELATED FUNCTIONS	
RADR: Disturbance recorder channel analogue	---
RBDR: Disturbance recorder channel binary	---
RBRF: Breaker failure	---
RDIR: Directional element	---
RDRE: Disturbance recorder function	---
RDRS: Disturbance record handling	---
RFLO: Fault locator	Yes
RMXU: Differential measurements	---
RPSB: Power swing detection/blocking	Yes
RREC: Autoreclosing	Yes
RSYN: Synchronism-check or synchronizing	---
S: LOGICAL NODES FOR SENSORS AND MONITORING	
SARC: Monitoring and diagnostics for arcs	---
SCBR: Circuit breaker supervision	---
SIMG: Insulation medium supervision (gas)	---
SIML: Insulation medium supervision (liquid)	---
SLTC: Tap changer supervision	---
SOPM: Supervision of operating mechanism	---
SPDC: Monitoring and diagnostics for partial discharges	---
SPTR: Power transformer supervision	---
SSWI: Circuit switch supervision	---
STMP: Temperature supervision	---
SVBR: Vibration supervision	---
T: LOGICAL NODES FOR INSTRUMENT TRANSFORMERS	
TANG: Angle	---
TAXD: Axial displacement	---
TCTR: Current transformer	---
TDST: Distance	---
TFLW: Liquid flow	---
TFRQ: Frequency	---
TGSN: Generic sensor	---
THUM: Humidity	---
TLVL: Media level	---
TMGF: Magnetic field	---
TMVM: Movement sensor	---

Table C–1: IEC 61850 LOGICAL NODES (Sheet 4 of 4)

NODES	UR-FAMILY
TPOS: Position indicator	---
TPRS: Pressure sensor	---
TRTN: Rotation transmitter	---
TSND: Sound pressure sensor	---
TTMP: Temperature sensor	---
TTNS: Mechanical tension	---
TVBR: Vibration sensor	---
TVTR: Voltage transformer	---
TWPH: Water acidity	---
X: LOGICAL NODES FOR SWITCHGEAR	
XCBR: Circuit breaker	Yes
XSWI: Circuit switch	Yes
Y: LOGICAL NODES FOR POWER TRANSFORMERS	
YEFN: Earth fault neutralizer (Petersen coil)	---
YLTC: Tap changer	---
YPSH: Power shunt	---
YPTR: Power transformer	---
Z: LOGICAL NODES FOR FURTHER POWER SYSTEM EQUIPMENT	
ZAXN: Auxiliary network	---
ZBAT: Battery	---
ZBSH: Bushing	---
ZCAB: Power cable	---
ZCAP: Capacitor bank	---
ZCON: Converter	---
ZGEN: Generator	---
ZGIL: Gas insulated line	---
ZLIN: Power overhead line	---
ZMOT: Motor	---
ZREA: Reactor	---
ZRES: Resistor	---
ZRRC: Rotating reactive component	---
ZSAR: Surge arrestor	---
ZSCR: Semi-conductor controlled rectifier	---
ZSMC: Synchronous machine	---
ZTCF: Thyristor controlled frequency converter	---
ZTRC: Thyristor controlled reactive component	---

C

D.1.1 OVERVIEW

IEC 60870-5-103 is defined as a companion standard for the informative element of the protection equipment. IEC 60870-5-103 defines communication for a serial, unbalanced link only. Communication speeds are defined as either 9600 or 19200 baud.

This manual assumes basic knowledge of the IEC 60870-5-103 protocol and the standard IEC 60870 documents relating to the protocol.

Standard IEC 60870 documents relating to IEC 60870-5-103:

- IEC 60870-5-1 Transmission frame formats
- IEC 60870-5-2 Link transmission procedures
- IEC 60870-5-3 General structure of application data
- IEC 60870-5-4 Definition and coding of application information elements
- IEC 60870-5-5 Basic application functions
- IEC 60870-5-6 Conformance testing guidelines

An IEC 60870-5-103 device is required to provide an interoperability table. Interoperability means that any required application data in the device, which can be coded into an IEC 60870-5-103 data type, can be mapped into the IEC 60870-5-103 address space. This data is recognized by any IEC 60870-5-103 master.

D.1.2 FACTOR AND OFFSET CALCULATION TO TRANSMIT MEASURAND

The general formula for the transmitted value is Xt = a * X + b

where X is the measurand, a is the multiplication factor, b is the offset and Xt is the value transmitted.

The conditions for determining a and b, when the values exceed the range are:

4096 = a*Xmax + b (Xmax is the maximum value for the measurand)

-4095 =a*Xmin + b (Xmin is the minimum value for the measurand)

By solving the above system of equations for a and b, we find that:

a = 8191 / (Xmax - Xmin)

b = -4096 * (Xmax + Xmin) / (Xmax - Xmin)

So

Xt = 8191/(Xmax - Xmin)) * X - 4096 * (Xmax + Xmin) / (Xmax - Xmin)

We may further simplify the above formula for situations where:

1)

Xmin = -Xmax (positive and negative values) :

Xt = (8191/2*Xmax) * X

a = 4096/Xmax

b = 0

2)

If Xmin = 0 (only positive values)

Xt = (8191/Xmax) * X - 4096

a = 2 * 4096/Xmax

b = -4096

To calculate Xmax, one needs to know the rated value for the specific type of measurand.

Xmax = 2.4 * Xrated

The boxes indicate the following: ☒ – used in standard direction; ☐ – not used.

1. PHYSICAL LAYER

Electrical interface

☒ EIA RS-485

32 Number of loads for one protection equipment

Optical interface

☐ Glass fibre

☐ Plastic fibre

☐ F-SMA type connector

☐ BFOC/2.5 type connector

Transmission speed

☒ 9600 bits/s

☒ 19200 bits/s

2. LINK LAYER

There are no choices for the link layer.

3. APPLICATION LAYER

Transmission mode for application data

Mode 1 (least significant octet first), as defined in 4.10 of IEC 60870-5-4, is used exclusively in this companion standard.

Common address of ASDU

☒ One COMMON ADDRESS OF ASDU (identical with station address)

☐ More than one COMMON ADDRESS OF ASDU

Selection of standard information numbers in monitor direction

System functions in monitor direction

	INF	Semantics
☒	<0>	End of general interrogation
☒	<0>	Time synchronization
☒	<2>	Reset FCB
☒	<3>	Reset CU
☒	<4>	Start/restart
☒	<5>	Power on

Status indications in monitor direction

	INF	Semantics
☐	<16>	Auto-recloser active
☐	<17>	Teleprotection active
☐	<18>	Protection active
☐	<19>	LED reset
☐	<20>	Monitor direction blocked
☐	<21>	Test mode

- ☐ <22> Local parameter setting
- ☐ <23> Characteristic 1
- ☐ <24> Characteristic 2
- ☐ <25> Characteristic 3
- ☐ <26> Characteristic 4
- ☐ <27> Auxiliary input 1
- ☐ <28> Auxiliary input 2
- ☐ <29> Auxiliary input 3
- ☐ <30> Auxiliary input 4

Supervision indications in monitor direction

INF Semantics

- ☐ <32> Measurand supervision I
- ☐ <33> Measurand supervision V
- ☐ <35> Phase sequence supervision
- ☐ <36> Trip circuit supervision
- ☐ <37> I>> back-up operation
- ☐ <38> VT fuse failure
- ☐ <39> Teleprotection disturbed
- ☐ <46> Group warning
- ☐ <47> Group alarm

Earth fault indications in monitor direction

INF Semantics

- ☐ <48> Earth fault L_1
- ☐ <49> Earth fault L_2
- ☐ <50> Earth fault L_3
- ☐ <51> Earth fault forward, meaning line
- ☐ <52> Earth fault reverse, meaning busbar

Fault indications in monitor direction

INF Semantics

- ☐ <64> Start/pick-up L_1
- ☐ <65> Start/pick-up L_2
- ☐ <66> Start/pick-up L_3
- ☐ <67> Start/pick-up N
- ☐ <68> General trip
- ☐ <69> Trip L_1
- ☐ <70> Trip L_2
- ☐ <71> Trip L_3
- ☐ <72> Trip I>> (back-up operation)
- ☐ <73> Fault location X in ohms
- ☐ <74> Fault forward/line

- ☐ <75> Fault reverse/busbar
- ☐ <76> Teleprotection signal transmitted
- ☐ <77> Teleprotection signal received
- ☐ <78> Zone 1
- ☐ <79> Zone 2
- ☐ <80> Zone 3
- ☐ <81> Zone 4
- ☐ <82> Zone 5
- ☐ <83> Zone 6
- ☐ <84> General start / pick-up
- ☐ <85> Breaker failure
- ☐ <86> Trip measuring system L_1
- ☐ <87> Trip measuring system L_2
- ☐ <88> Trip measuring system L_3
- ☐ <89> Trip measuring system E
- ☐ <90> Trip I>
- ☐ <91> Trip I>>
- ☐ <92> Trip IN>
- ☐ <93> Trip IN>>

Auto-reclosure indications in monitor direction

INF Semantics

- ☐ <128> CB 'on' by AR
- ☐ <129> CB 'on' by long-time AR
- ☐ <130> AR blocked

Measurands in monitor direction

INF Semantics

- ☐ <144> Measurand I
- ☐ <145> Measurands I, V
- ☐ <146> Measurands I, V, P, Q
- ☐ <147> Measurands I_N, V_{EN}
- ☐ <148> Measurands I_{L123}, V_{L123}, P, Q, f

Generic functions in monitor direction

INF Semantics

- ☐ <240> Read headings of all defined groups
- ☐ <241> Read values or attributes of all entries of one group
- ☐ <243> Read directory of a single entry
- ☐ <244> Read value or attribute of a single entry
- ☐ <245> End of general interrogation of generic data
- ☐ <249> Write entry with confirmation
- ☐ <250> Write entry with execution

☐ <251> Write entry aborted

Selection of standard information numbers in control direction

System functions in control direction

	INF	Semantics
☒	<0>	Initiation of general interrogation
☒	<0>	Time synchronization

General commands in control direction

	INF	Semantics
☐	<16>	Auto-recloser on/off
☐	<17>	Teleprotection on/off
☐	<18>	Protection on/off
☐	<19>	LED reset
☐	<23>	Activate characteristic 1
☐	<24>	Activate characteristic 2
☐	<25>	Activate characteristic 3
☐	<26>	Activate characteristic 4

Generic functions in control direction

	INF	Semantics
☐	<240>	Read headings of all defined groups
☐	<241>	Read values or attributes of all entries of one group
☐	<243>	Read directory of a single entry
☐	<244>	Read value or attribute of a single entry
☐	<245>	General interrogation of generic data
☐	<248>	Write entry
☐	<249>	Write entry with confirmation
☐	<250>	Write entry with execution
☐	<251>	Write entry abort

Basic application functions

- ☐ Test mode
- ☐ Blocking of monitor direction
- ☐ Disturbance data
- ☐ Generic services
- ☐ Private data

Miscellaneous

MEASURAND	MAX MVAL = TIMES RATED VALUE		
	1,2	OR	2,4
Current L_1	☐		☒
Current L_2	☐		☒
Current L_3	☐		☒
Voltage L_{1-E}	☐		☒
Voltage L_{2-E}	☐		☒

MEASURAND	MAX MVAL = TIMES RATED VALUE		
	1,2	OR	2,4
Voltage L_{3-E}	☐		☒
Active power P	☐		☒
Reactive power Q	☐		☒
Frequency f	☐		☒
Voltage L_1-L_2	☐		☒

E.1.1 INTEROPERABILITY DOCUMENT

This document is adapted from the IEC 60870-5-104 standard. For this section the boxes indicate the following: ☒ – used in standard direction; ☐ – not used; ■ – cannot be selected in IEC 60870-5-104 standard.

1. SYSTEM OR DEVICE:

☐ System Definition

☐ Controlling Station Definition (Master)

☒ **Controlled Station Definition (Slave)**

2. NETWORK CONFIGURATION:

■ ~~Point-to-Point~~ ■ ~~Multipoint~~

■ ~~Multiple Point-to-Point~~ ■ ~~Multipoint Star~~

3. PHYSICAL LAYER

Transmission Speed (control direction):

Unbalanced Interchange Circuit V.24/V.28 Standard:	Unbalanced Interchange Circuit V.24/V.28 Recommended if >1200 bits/s:	Balanced Interchange Circuit X.24/X.27:
■ ~~100 bits/sec.~~	■ ~~2400 bits/sec.~~	■ ~~2400 bits/sec.~~
■ ~~200 bits/sec.~~	■ ~~4800 bits/sec.~~	■ ~~4800 bits/sec.~~
■ ~~300 bits/sec.~~	■ ~~9600 bits/sec.~~	■ ~~9600 bits/sec.~~
■ ~~600 bits/sec.~~		■ ~~19200 bits/sec.~~
■ ~~1200 bits/sec.~~		■ ~~38400 bits/sec.~~
		■ ~~56000 bits/sec.~~
		■ ~~64000 bits/sec.~~

Transmission Speed (monitor direction):

Unbalanced Interchange Circuit V.24/V.28 Standard:	Unbalanced Interchange Circuit V.24/V.28 Recommended if >1200 bits/s:	Balanced Interchange Circuit X.24/X.27:
■ ~~100 bits/sec.~~	■ ~~2400 bits/sec.~~	■ ~~2400 bits/sec.~~
■ ~~200 bits/sec.~~	■ ~~4800 bits/sec.~~	■ ~~4800 bits/sec.~~
■ ~~300 bits/sec.~~	■ ~~9600 bits/sec.~~	■ ~~9600 bits/sec.~~
■ ~~600 bits/sec.~~		■ ~~19200 bits/sec.~~
■ ~~1200 bits/sec.~~		■ ~~38400 bits/sec.~~
		■ ~~56000 bits/sec.~~
		■ ~~64000 bits/sec.~~

4. LINK LAYER

Link Transmission Procedure:	Address Field of the Link:
■ ~~Balanced Transmission~~	■ ~~Not Present (Balanced Transmission Only)~~
■ ~~Unbalanced Transmission~~	■ ~~One Octet~~
	■ ~~Two Octets~~
	■ ~~Structured~~
	■ ~~Unstructured~~
Frame Length (maximum length, number of octets): Not selectable in companion IEC 60870-5-104 standard	

When using an unbalanced link layer, the following Application Service Data Unit (ASDU) types are returned in class 2 messages (low priority) with the indicated causes of transmission:

■ ~~The standard assignment of ASDUs to class 2 messages is used as follows~~:

■ ~~A special assignment of ASDUs to class 2 messages is used as follows~~:

5. APPLICATION LAYER

Transmission Mode for Application Data:
Mode 1 (least significant octet first), as defined in Clause 4.10 of IEC 60870-5-4, is used exclusively in this companion standard.

Common Address of ASDU:

■ ~~One Octet~~

☒ Two Octets

Information Object Address:

■ ~~One Octet~~ ☒ Structured

■ ~~Two Octets~~ ☒ Unstructured

☒ Three Octets

Cause of Transmission:

■ ~~One Octet~~

☒ Two Octets (with originator address). Originator address is set to zero if not used.

Maximum Length of APDU: 253 (the maximum length may be reduced by the system.

Selection of standard ASDUs:

For the following lists, the boxes indicate the following: ☒ – used in standard direction; ☐ – not used; ■ – cannot be selected in IEC 60870-5-104 standard.

Process information in monitor direction

☒ <1> := Single-point information	M_SP_NA_1
■ ~~<2> := Single-point information with time tag~~	~~M_SP_TA_1~~
☐ <3> := Double-point information	M_DP_NA_1
■ ~~<4> := Double-point information with time tag~~	~~M_DP_TA_1~~
☐ <5> := Step position information	M_ST_NA_1
■ ~~<6> := Step position information with time tag~~	~~M_ST_TA_1~~
☐ <7> := Bitstring of 32 bits	M_BO_NA_1
■ ~~<8> := Bitstring of 32 bits with time tag~~	~~M_BO_TA_1~~
☐ <9> := Measured value, normalized value	M_ME_NA_1
■ ~~<10> := Measured value, normalized value with time tag~~	~~M_NE_TA_1~~
☐ <11> := Measured value, scaled value	M_ME_NB_1
■ ~~<12> := Measured value, scaled value with time tag~~	~~M_NE_TB_1~~
☒ <13> := Measured value, short floating point value	M_ME_NC_1
■ ~~<14> := Measured value, short floating point value with time tag~~	~~M_NE_TC_1~~
☒ <15> := Integrated totals	M_IT_NA_1
■ ~~<16> := Integrated totals with time tag~~	~~M_IT_TA_1~~
■ ~~<17> := Event of protection equipment with time tag~~	~~M_EP_TA_1~~
■ ~~<18> := Packed start events of protection equipment with time tag~~	~~M_EP_TB_1~~
■ ~~<19> := Packed output circuit information of protection equipment with time tag~~	~~M_EP_TC_1~~
☐ <20> := Packed single-point information with status change detection	M_SP_NA_1

☐ <21> := Measured value, normalized value without quantity descriptor	M_ME_ND_1
☒ <30> := Single-point information with time tag CP56Time2a	M_SP_TB_1
☐ <31> := Double-point information with time tag CP56Time2a	M_DP_TB_1
☐ <32> := Step position information with time tag CP56Time2a	M_ST_TB_1
☐ <33> := Bitstring of 32 bits with time tag CP56Time2a	M_BO_TB_1
☐ <34> := Measured value, normalized value with time tag CP56Time2a	M_ME_TD_1
☐ <35> := Measured value, scaled value with time tag CP56Time2a	M_ME_TE_1
☐ <36> := Measured value, short floating point value with time tag CP56Time2a	M_ME_TF_1
☒ <37> := Integrated totals with time tag CP56Time2a	M_IT_TB_1
☐ <38> := Event of protection equipment with time tag CP56Time2a	M_EP_TD_1
☐ <39> := Packed start events of protection equipment with time tag CP56Time2a	M_EP_TE_1
☐ <40> := Packed output circuit information of protection equipment with time tag CP56Time2a	M_EP_TF_1

Either the ASDUs of the set <2>, <4>, <6>, <8>, <10>, <12>, <14>, <16>, <17>, <18>, and <19> or of the set <30> to <40> are used.

Process information in control direction

☒ <45> := Single command	C_SC_NA_1
☐ <46> := Double command	C_DC_NA_1
☐ <47> := Regulating step command	C_RC_NA_1
☐ <48> := Set point command, normalized value	C_SE_NA_1
☐ <49> := Set point command, scaled value	C_SE_NB_1
☐ <50> := Set point command, short floating point value	C_SE_NC_1
☐ <51> := Bitstring of 32 bits	C_BO_NA_1
☒ <58> := Single command with time tag CP56Time2a	C_SC_TA_1
☐ <59> := Double command with time tag CP56Time2a	C_DC_TA_1
☐ <60> := Regulating step command with time tag CP56Time2a	C_RC_TA_1
☐ <61> := Set point command, normalized value with time tag CP56Time2a	C_SE_TA_1
☐ <62> := Set point command, scaled value with time tag CP56Time2a	C_SE_TB_1
☐ <63> := Set point command, short floating point value with time tag CP56Time2a	C_SE_TC_1
☐ <64> := Bitstring of 32 bits with time tag CP56Time2a	C_BO_TA_1

Either the ASDUs of the set <45> to <51> or of the set <58> to <64> are used.

System information in monitor direction

☒ <70> := End of initialization	M_EI_NA_1

System information in control direction

☒ <100> := Interrogation command	C_IC_NA_1
☒ <101> := Counter interrogation command	C_CI_NA_1
☒ <102> := Read command	C_RD_NA_1
☒ <103> := Clock synchronization command (see Clause 7.6 in standard)	C_CS_NA_1
■ ~~<104> := Test command~~	~~C_TS_NA_1~~
☒ <105> := Reset process command	C_RP_NA_1
■ <106> := Delay acquisition command	C_CD_NA_1
☒ <107> := Test command with time tag CP56Time2a	C_TS_TA_1

Parameter in control direction

☐ <110> := Parameter of measured value, normalized value	PE_ME_NA_1
☐ <111> := Parameter of measured value, scaled value	PE_ME_NB_1
☒ <112> := Parameter of measured value, short floating point value	PE_ME_NC_1
☐ <113> := Parameter activation	PE_AC_NA_1

File transfer

☐ <120> := File Ready	F_FR_NA_1
☐ <121> := Section Ready	F_SR_NA_1
☐ <122> := Call directory, select file, call file, call section	F_SC_NA_1
☐ <123> := Last section, last segment	F_LS_NA_1
☐ <124> := Ack file, ack section	F_AF_NA_1
☐ <125> := Segment	F_SG_NA_1
☐ <126> := Directory (blank or X, available only in monitor [standard] direction)	C_CD_NA_1

Type identifier and cause of transmission assignments
(station-specific parameters)

In the following table:

•Shaded boxes are not required.

•Black boxes are not permitted in this companion standard.

•Blank boxes indicate functions or ASDU not used.

•'**X**' if only used in the standard direction

TYPE IDENTIFICATION		CAUSE OF TRANSMISSION																	
		PERIODIC, CYCLIC	BACKGROUND SCAN	SPONTANEOUS	INITIALIZED	REQUEST OR REQUESTED	ACTIVATION	ACTIVATION CONFIRMATION	DEACTIVATION	DEACTIVATION CONFIRMATION	ACTIVATION TERMINATION	RETURN INFO CAUSED BY LOCAL CMD	FILE TRANSFER	INTERROGATED BY GROUP <NUMBER>	REQUEST BY GROUP <N> COUNTER REQ	UNKNOWN TYPE IDENTIFICATION	UNKNOWN CAUSE OF TRANSMISSION	UNKNOWN COMMON ADDRESS OF ASDU	UNKNOWN INFORMATION OBJECT ADDR	UNKNOWN INFORMATION OBJECT ADDR
NO.	MNEMONIC	1	2	3	4	5	6	7	8	9	10	11	12	13	20 to 36	37 to 41	44	45	46	47
<1>	M_SP_NA_1			X		X						X	X		X					
<2>	M_SP_TA_1																			
<3>	M_DP_NA_1																			
<4>	M_DP_TA_1																			
<5>	M_ST_NA_1																			
<6>	M_ST_TA_1																			
<7>	M_BO_NA_1																			
<8>	M_BO_TA_1																			
<9>	M_ME_NA_1																			

TYPE IDENTIFICATION		CAUSE OF TRANSMISSION																	
		PERIODIC, CYCLIC	BACKGROUND SCAN	SPONTANEOUS	INITIALIZED	REQUEST OR REQUESTED	ACTIVATION	ACTIVATION CONFIRMATION	DEACTIVATION	DEACTIVATION CONFIRMATION	ACTIVATION TERMINATION	RETURN INFO CAUSED BY LOCAL CMD	FILE TRANSFER	INTERROGATED BY GROUP <NUMBER>	REQUEST BY GROUP <N> COUNTER REQ	UNKNOWN TYPE IDENTIFICATION	UNKNOWN CAUSE OF TRANSMISSION	UNKNOWN COMMON ADDRESS OF ASDU	UNKNOWN INFORMATION OBJECT ADDR	UNKNOWN INFORMATION OBJECT ADDR
NO.	MNEMONIC	1	2	3	4	5	6	7	8	9	10	11	12	13	20 to 36	37 to 41	44	45	46	47
<10>	M_ME_TA_1																			
<11>	M_ME_NB_1																			
<12>	M_ME_TB_1																			
<13>	M_ME_NC_1	X		X		X									X					
<14>	M_ME_TC_1																			
<15>	M_IT_NA_1			X												X				
<16>	M_IT_TA_1																			
<17>	M_EP_TA_1																			
<18>	M_EP_TB_1																			
<19>	M_EP_TC_1																			
<20>	M_PS_NA_1																			
<21>	M_ME_ND_1																			
<30>	M_SP_TB_1			X								X	X							
<31>	M_DP_TB_1																			
<32>	M_ST_TB_1																			
<33>	M_BO_TB_1																			
<34>	M_ME_TD_1																			
<35>	M_ME_TE_1																			
<36>	M_ME_TF_1																			
<37>	M_IT_TB_1			X												X				
<38>	M_EP_TD_1																			
<39>	M_EP_TE_1																			
<40>	M_EP_TF_1																			
<45>	C_SC_NA_1						X	X	X	X	X									
<46>	C_DC_NA_1																			
<47>	C_RC_NA_1																			
<48>	C_SE_NA_1																			
<49>	C_SE_NB_1																			
<50>	C_SE_NC_1																			
<51>	C_BO_NA_1																			
<58>	C_SC_TA_1						X	X	X	X	X									
<59>	C_DC_TA_1																			
<60>	C_RC_TA_1																			

TYPE IDENTIFICATION		CAUSE OF TRANSMISSION																		
		PERIODIC, CYCLIC	BACKGROUND SCAN	SPONTANEOUS	INITIALIZED	REQUEST OR REQUESTED	ACTIVATION	ACTIVATION CONFIRMATION	DEACTIVATION	DEACTIVATION CONFIRMATION	ACTIVATION TERMINATION	RETURN INFO CAUSED BY LOCAL CMD	FILE TRANSFER	INTERROGATED BY GROUP <NUMBER>	REQUEST BY GROUP <N> COUNTER REQ	UNKNOWN TYPE IDENTIFICATION	UNKNOWN CAUSE OF TRANSMISSION	UNKNOWN COMMON ADDRESS OF ASDU	UNKNOWN INFORMATION OBJECT ADDR	UNKNOWN INFORMATION OBJECT ADDR
NO.	MNEMONIC	1	2	3	4	5	6	7	8	9	10	11	12	13	20 to 36	37 to 41	44	45	46	47
<61>	C_SE_TA_1																			
<62>	C_SE_TB_1																			
<63>	C_SE_TC_1																			
<64>	C_BO_TA_1																			
<70>	M_EI_NA_1*)				X															
<100>	C_IC_NA_1						X	X	X	X	X									
<101>	C_CI_NA_1						X	X			X									
<102>	C_RD_NA_1					X														
<103>	C_CS_NA_1			X			X	X												
<104>	C_TS_NA_1																			
<105>	C_RP_NA_1						X	X												
<106>	C_CD_NA_1																			
<107>	C_TS_TA_1																			
<110>	P_ME_NA_1																			
<111>	P_ME_NB_1																			
<112>	P_ME_NC_1						X	X							X					
<113>	P_AC_NA_1																			
<120>	F_FR_NA_1																			
<121>	F_SR_NA_1																			
<122>	F_SC_NA_1																			
<123>	F_LS_NA_1																			
<124>	F_AF_NA_1																			
<125>	F_SG_NA_1																			
<126>	F_DR_TA_1*)																			

6. BASIC APPLICATION FUNCTIONS

Station Initialization:

☒ Remote initialization

Cyclic Data Transmission:

☒ Cyclic data transmission

Read Procedure:

☒ Read procedure

Spontaneous Transmission:

☒ Spontaneous transmission

Double transmission of information objects with cause of transmission spontaneous:

The following type identifications may be transmitted in succession caused by a single status change of an information object. The particular information object addresses for which double transmission is enabled are defined in a project-specific list.

☐ Single point information: M_SP_NA_1, M_SP_TA_1, M_SP_TB_1, and M_PS_NA_1

☐ Double point information: M_DP_NA_1, M_DP_TA_1, and M_DP_TB_1

☐ Step position information: M_ST_NA_1, M_ST_TA_1, and M_ST_TB_1

☐ Bitstring of 32 bits: M_BO_NA_1, M_BO_TA_1, and M_BO_TB_1 (if defined for a specific project)

☐ Measured value, normalized value: M_ME_NA_1, M_ME_TA_1, M_ME_ND_1, and M_ME_TD_1

☐ Measured value, scaled value: M_ME_NB_1, M_ME_TB_1, and M_ME_TE_1

☐ Measured value, short floating point number: M_ME_NC_1, M_ME_TC_1, and M_ME_TF_1

Station interrogation:

☒ Global

☒ Group 1	☒ Group 5	☒ Group 9	☒ Group 13
☒ Group 2	☒ Group 6	☒ Group 10	☒ Group 14
☒ Group 3	☒ Group 7	☒ Group 11	☒ Group 15
☒ Group 4	☒ Group 8	☒ Group 12	☒ Group 16

Clock synchronization:

☒ Clock synchronization (optional, see Clause 7.6)

Command transmission:

☒ Direct command transmission

☐ Direct setpoint command transmission

☒ Select and execute command

☐ Select and execute setpoint command

☒ C_SE ACTTERM used

☒ No additional definition

☒ Short pulse duration (duration determined by a system parameter in the outstation)

☒ Long pulse duration (duration determined by a system parameter in the outstation)

☒ Persistent output

☒ Supervision of maximum delay in command direction of commands and setpoint commands

Maximum allowable delay of commands and setpoint commands: **10 s**

Transmission of integrated totals:

☒ Mode A: Local freeze with spontaneous transmission

☒ Mode B: Local freeze with counter interrogation

☒ Mode C: Freeze and transmit by counter-interrogation commands

☒ Mode D: Freeze by counter-interrogation command, frozen values reported simultaneously

☒ Counter read

☒ Counter freeze without reset

☒ Counter freeze with reset

☒ Counter reset

☒ General request counter

☒ Request counter group 1

☒ Request counter group 2

☒ Request counter group 3

☒ Request counter group 4

Parameter loading:

☒ Threshold value

☐ Smoothing factor

☐ Low limit for transmission of measured values

☐ High limit for transmission of measured values

Parameter activation:

☐ Activation/deactivation of persistent cyclic or periodic transmission of the addressed object

Test procedure:

☐ Test procedure

File transfer:

File transfer in monitor direction:

☐ Transparent file

☐ Transmission of disturbance data of protection equipment

☐ Transmission of sequences of events

☐ Transmission of sequences of recorded analog values

File transfer in control direction:

☐ Transparent file

Background scan:

☐ Background scan

Acquisition of transmission delay:

■ ~~Acquisition of transmission delay~~

Definition of time outs:

PARAMETER	DEFAULT VALUE	REMARKS	SELECTED VALUE
t_0	30 s	Timeout of connection establishment	120 s
t_1	15 s	Timeout of send or test APDUs	15 s
t_2	10 s	Timeout for acknowledgements in case of no data messages $t_2 < t_1$	10 s
t_3	20 s	Timeout for sending test frames in case of a long idle state	20 s

Maximum range of values for all time outs: 1 to 255 s, accuracy 1 s

Maximum number of outstanding I-format APDUs *k* and latest acknowledge APDUs (*w*):

PARAMETER	DEFAULT VALUE	REMARKS	SELECTED VALUE
k	12 APDUs	Maximum difference receive sequence number to send state variable	12 APDUs
w	8 APDUs	Latest acknowledge after receiving *w* I-format APDUs	8 APDUs

Maximum range of values *k*: 1 to 32767 (2^{15} – 1) APDUs, accuracy 1 APDU

Maximum range of values *w*: 1 to 32767 APDUs, accuracy 1 APDU
Recommendation: *w* should not exceed two-thirds of *k*.

Portnumber:

PARAMETER	VALUE	REMARKS
Portnumber	2404	In all cases

RFC 2200 suite:

RFC 2200 is an official Internet Standard which describes the state of standardization of protocols used in the Internet as determined by the Internet Architecture Board (IAB). It offers a broad spectrum of actual standards used in the Internet. The suitable selection of documents from RFC 2200 defined in this standard for given projects has to be chosen by the user of this standard.

☒ Ethernet 802.3

☐ Serial X.21 interface

☐ Other selection(s) from RFC 2200 (list below if selected)

E.1.2 IEC 60870-5-104 POINT LIST

The IEC 60870-5-104 data points are configured through the **SETTINGS** ⇨ **PRODUCT SETUP** ⇨⇩ **COMMUNICATIONS** ⇨⇩ **DNP / IEC104 POINT LISTS** menu. See the Communications section of chapter 5 for details.

The following table provides a 'Device Profile Document' in the standard format defined in the DNP 3.0 Subset Definitions Document.

Table F–1: DNP V3.00 DEVICE PROFILE (Sheet 1 of 3)

(Also see the IMPLEMENTATION TABLE in the following section)	
Vendor Name: **General Electric Multilin**	
Device Name: **UR Series Relay**	
Highest DNP Level Supported: For Requests: **Level 2** For Responses: **Level 2**	**Device Function:** ☐ Master ☒ **Slave**
Notable objects, functions, and/or qualifiers supported in addition to the Highest DNP Levels Supported (the complete list is described in the attached table): **Binary Inputs (Object 1)** **Binary Input Changes (Object 2)** **Binary Outputs (Object 10)** **Control Relay Output Block (Object 12)** **Binary Counters (Object 20)** **Frozen Counters (Object 21)** **Counter Change Event (Object 22)** **Frozen Counter Event (Object 23)** **Analog Inputs (Object 30)** **Analog Input Changes (Object 32)** **Analog Deadbands (Object 34)** **Time and Date (Object 50)** **File Transfer (Object 70)** **Internal Indications (Object 80)**	
Maximum Data Link Frame Size (octets): Transmitted: **292** Received: **292**	**Maximum Application Fragment Size (octets):** Transmitted: **configurable up to 2048** Received: **2048**
Maximum Data Link Re-tries: ☒ **None** ☐ Fixed at 3 ☐ Configurable	**Maximum Application Layer Re-tries:** ☒ **None** ☐ Configurable
Requires Data Link Layer Confirmation: ☒ Never ☐ Always ☐ Sometimes ☐ Configurable	

Table F–1: DNP V3.00 DEVICE PROFILE (Sheet 2 of 3)

Requires Application Layer Confirmation:

- ☐ Never
- ☐ Always
- ☒ When reporting Event Data
- ☒ When sending multi-fragment responses
- ☐ Sometimes
- ☐ Configurable

Timeouts while waiting for:

Data Link Confirm:	☒ None	☐ Fixed at ____	☐ Variable	☐ Configurable
Complete Appl. Fragment:	☒ **None**	☐ Fixed at ____	☐ Variable	☐ Configurable
Application Confirm:	☐ None	☒ **Fixed at 10 s**	☐ Variable	☐ Configurable
Complete Appl. Response:	☒ **None**	☐ Fixed at ____	☐ Variable	☐ Configurable

Others:

Transmission Delay:	**No intentional delay**
Need Time Interval:	**Configurable (default = 24 hrs.)**
Select/Operate Arm Timeout:	**10 s**
Binary input change scanning period:	**8 times per power system cycle**
Analog input change scanning period:	**500 ms**
Counter change scanning period:	**500 ms**
Frozen counter event scanning period:	**500 ms**
Unsolicited response notification delay:	**100 ms**
Unsolicited response retry delay	**configurable 0 to 60 sec.**

Sends/Executes Control Operations:

WRITE Binary Outputs	☒ **Never**	☐ Always	☐ Sometimes	☐ Configurable
SELECT/OPERATE	☐ Never	☒ **Always**	☐ Sometimes	☐ Configurable
DIRECT OPERATE	☐ Never	☒ **Always**	☐ Sometimes	☐ Configurable
DIRECT OPERATE – NO ACK	☐ Never	☒ **Always**	☐ Sometimes	☐ Configurable

Count > 1	☒ **Never**	☐ Always	☐ Sometimes	☐ Configurable
Pulse On	☐ Never	☐ Always	☒ **Sometimes**	☐ Configurable
Pulse Off	☐ Never	☐ Always	☒ **Sometimes**	☐ Configurable
Latch On	☐ Never	☐ Always	☒ **Sometimes**	☐ Configurable
Latch Off	☐ Never	☐ Always	☒ **Sometimes**	☐ Configurable
Queue	☒ **Never**	☐ Always	☐ Sometimes	☐ Configurable
Clear Queue	☒ **Never**	☐ Always	☐ Sometimes	☐ Configurable

Explanation of 'Sometimes': Object 12 points are mapped to UR Virtual Inputs. The persistence of Virtual Inputs is determined by the **VIRTUAL INPUT X TYPE** settings. Both "Pulse On" and "Latch On" operations perform the same function in the UR; that is, the appropriate Virtual Input is put into the "On" state. If the Virtual Input is set to "Self-Reset", it will reset after one pass of FlexLogic. The On/Off times and Count value are ignored. "Pulse Off" and "Latch Off" operations put the appropriate Virtual Input into the "Off" state. "Trip" and "Close" operations both put the appropriate Virtual Input into the "On" state.

Table F–1: DNP V3.00 DEVICE PROFILE (Sheet 3 of 3)

Reports Binary Input Change Events when no specific variation requested: ☐ Never ☒ **Only time-tagged** ☐ Only non-time-tagged ☐ Configurable	**Reports time-tagged Binary Input Change Events when no specific variation requested:** ☐ Never ☒ Binary Input Change With Time ☐ Binary Input Change With Relative Time ☐ Configurable (attach explanation)
Sends Unsolicited Responses: ☐ **Never** ☒ Configurable ☐ Only certain objects ☐ Sometimes (attach explanation) ☒ ENABLE/DISABLE unsolicited Function codes supported	**Sends Static Data in Unsolicited Responses:** ☒ Never ☐ When Device Restarts ☐ When Status Flags Change No other options are permitted.
Default Counter Object/Variation: ☐ No Counters Reported ☐ Configurable (attach explanation) ☒ **Default Object: 20** **Default Variation: 1** ☒ **Point-by-point list attached**	**Counters Roll Over at:** ☐ No Counters Reported ☐ Configurable (attach explanation) ☒ **16 Bits (Counter 8)** ☒ **32 Bits (Counters 0 to 7, 9)** ☐ Other Value: _____ ☒ **Point-by-point list attached**
Sends Multi-Fragment Responses: ☒ **Yes** ☐ No	

F

The following table identifies the variations, function codes, and qualifiers supported by the G60 in both request messages and in response messages. For static (non-change-event) objects, requests sent with qualifiers 00, 01, 06, 07, or 08, will be responded with qualifiers 00 or 01. Static object requests sent with qualifiers 17 or 28 will be responded with qualifiers 17 or 28. For change-event objects, qualifiers 17 or 28 are always responded.

Table F–2: IMPLEMENTATION TABLE (Sheet 1 of 4)

OBJECT			REQUEST		RESPONSE	
OBJECT NO.	VARIATION NO.	DESCRIPTION	FUNCTION CODES (DEC)	QUALIFIER CODES (HEX)	FUNCTION CODES (DEC)	QUALIFIER CODES (HEX)
1	0	Binary Input (Variation 0 is used to request default variation)	1 (read) 22 (assign class)	00, 01 (start-stop) 06 (no range, or all) 07, 08 (limited quantity) 17, 28 (index)		
	1	Binary Input	1 (read) 22 (assign class)	00, 01 (start-stop) 06 (no range, or all) 07, 08 (limited quantity) 17, 28 (index)	129 (response)	00, 01 (start-stop) 17, 28 (index) *(see Note 2)*
	2	Binary Input with Status	1 (read) 22 (assign class)	00, 01 (start-stop) 06 (no range, or all) 07, 08 (limited quantity) 17, 28 (index)	129 (response)	00, 01 (start-stop) 17, 28 (index) *(see Note 2)*
2	0	Binary Input Change (Variation 0 is used to request default variation)	1 (read)	06 (no range, or all) 07, 08 (limited quantity)		
	1	Binary Input Change without Time	1 (read)	06 (no range, or all) 07, 08 (limited quantity)	129 (response) 130 (unsol. resp.)	17, 28 (index)
	2	Binary Input Change with Time	1 (read)	06 (no range, or all) 07, 08 (limited quantity)	129 (response 130 (unsol. resp.)	17, 28 (index)
	3	Binary Input Change with Relative Time	1 (read)	06 (no range, or all) 07, 08 (limited quantity)		
10	0	Binary Output Status (Variation 0 is used to request default variation)	1 (read)	00, 01(start-stop) 06 (no range, or all) 07, 08 (limited quantity) 17, 28 (index)		
	2	Binary Output Status	1 (read)	00, 01 (start-stop) 06 (no range, or all) 07, 08 (limited quantity) 17, 28 (index)	129 (response)	00, 01 (start-stop) 17, 28 (index) *(see Note 2)*
12	1	Control Relay Output Block	3 (select) 4 (operate) 5 (direct op) 6 (dir. op, noack)	00, 01 (start-stop) 07, 08 (limited quantity) 17, 28 (index)	129 (response)	echo of request
20	0	Binary Counter (Variation 0 is used to request default variation)	1 (read) 7 (freeze) 8 (freeze noack) 9 (freeze clear) 10 (frz. cl. noack) 22 (assign class)	00, 01(start-stop) 06(no range, or all) 07, 08(limited quantity) 17, 28(index)		
	1	32-Bit Binary Counter	1 (read) 7 (freeze) 8 (freeze noack) 9 (freeze clear) 10 (frz. cl. noack) 22 (assign class)	00, 01 (start-stop) 06 (no range, or all) 07, 08 (limited quantity) 17, 28 (index)	129 (response)	00, 01 (start-stop) 17, 28 (index) *(see Note 2)*

Note 1: A default variation refers to the variation responded when variation 0 is requested and/or in class 0, 1, 2, or 3 scans. The default variations for object types 1, 2, 20, 21, 22, 23, 30, and 32 are selected via relay settings. See the Communications section in Chapter 5 for details. This optimizes the class 0 poll data size.

Note 2: For static (non-change-event) objects, qualifiers 17 or 28 are only responded when a request is sent with qualifiers 17 or 28, respectively. Otherwise, static object requests sent with qualifiers 00, 01, 06, 07, or 08, will be responded with qualifiers 00 or 01 (for change-event objects, qualifiers 17 or 28 are always responded.)

Note 3: Cold restarts are implemented the same as warm restarts – the G60 is not restarted, but the DNP process is restarted.

Table F–2: IMPLEMENTATION TABLE (Sheet 2 of 4)

OBJECT			REQUEST		RESPONSE	
OBJECT NO.	VARIATION NO.	DESCRIPTION	FUNCTION CODES (DEC)	QUALIFIER CODES (HEX)	FUNCTION CODES (DEC)	QUALIFIER CODES (HEX)
20 cont'd	2	16-Bit Binary Counter	1 (read) 7 (freeze) 8 (freeze noack) 9 (freeze clear) 10 (frz. cl. noack) 22 (assign class)	00, 01 (start-stop) 06 (no range, or all) 07, 08 (limited quantity) 17, 28 (index)	129 (response)	00, 01 (start-stop) 17, 28 (index) *(see Note 2)*
	5	32-Bit Binary Counter without Flag	1 (read) 7 (freeze) 8 (freeze noack) 9 (freeze clear) 10 (frz. cl. noack) 22 (assign class)	00, 01 (start-stop) 06 (no range, or all) 07, 08 (limited quantity) 17, 28 (index)	129 (response)	00, 01 (start-stop) 17, 28 (index) *(see Note 2)*
	6	16-Bit Binary Counter without Flag	1 (read) 7 (freeze) 8 (freeze noack) 9 (freeze clear) 10 (frz. cl. noack) 22 (assign class)	00, 01 (start-stop) 06 (no range, or all) 07, 08 (limited quantity) 17, 28 (index)	129 (response)	00, 01 (start-stop) 17, 28 (index) *(see Note 2)*
21	0	Frozen Counter (Variation 0 is used to request default variation)	1 (read) 22 (assign class)	00, 01 (start-stop) 06 (no range, or all) 07, 08 (limited quantity) 17, 28 (index)		
	1	32-Bit Frozen Counter	1 (read) 22 (assign class)	00, 01 (start-stop) 06 (no range, or all) 07, 08 (limited quantity) 17, 28 (index)	129 (response)	00, 01 (start-stop) 17, 28 (index) *(see Note 2)*
	2	16-Bit Frozen Counter	1 (read) 22 (assign class)	00, 01 (start-stop) 06 (no range, or all) 07, 08 (limited quantity) 17, 28 (index)	129 (response)	00, 01 (start-stop) 17, 28 (index) *(see Note 2)*
	9	32-Bit Frozen Counter without Flag	1 (read) 22 (assign class)	00, 01 (start-stop) 06 (no range, or all) 07, 08 (limited quantity) 17, 28 (index)	129 (response)	00, 01 (start-stop) 17, 28 (index) *(see Note 2)*
	10	16-Bit Frozen Counter without Flag	1 (read) 22 (assign class)	00, 01 (start-stop) 06 (no range, or all) 07, 08 (limited quantity) 17, 28 (index)	129 (response)	00, 01 (start-stop) 17, 28 (index) *(see Note 2)*
22	0	Counter Change Event (Variation 0 is used to request default variation)	1 (read)	06 (no range, or all) 07, 08 (limited quantity)		
	1	32-Bit Counter Change Event	1 (read)	06 (no range, or all) 07, 08 (limited quantity)	129 (response) 130 (unsol. resp.)	17, 28 (index)
	2	16-Bit Counter Change Event	1 (read)	06 (no range, or all) 07, 08 (limited quantity)	129 (response) 130 (unsol. resp.)	17, 28 (index)
	5	32-Bit Counter Change Event with Time	1 (read)	06 (no range, or all) 07, 08 (limited quantity)	129 (response) 130 (unsol. resp.)	17, 28 (index)
	6	16-Bit Counter Change Event with Time	1 (read)	06 (no range, or all) 07, 08 (limited quantity)	129 (response) 130 (unsol. resp.)	17, 28 (index)
23	0	Frozen Counter Event (Variation 0 is used to request default variation)	1 (read)	06 (no range, or all) 07, 08 (limited quantity)		
	1	32-Bit Frozen Counter Event	1 (read)	06 (no range, or all) 07, 08 (limited quantity)	129 (response) 130 (unsol. resp.)	17, 28 (index)
	2	16-Bit Frozen Counter Event	1 (read)	06 (no range, or all) 07, 08 (limited quantity)	129 (response) 130 (unsol. resp.)	17, 28 (index)

Note 1: A default variation refers to the variation responded when variation 0 is requested and/or in class 0, 1, 2, or 3 scans. The default variations for object types 1, 2, 20, 21, 22, 23, 30, and 32 are selected via relay settings. See the Communications section in Chapter 5 for details. This optimizes the class 0 poll data size.

Note 2: For static (non-change-event) objects, qualifiers 17 or 28 are only responded when a request is sent with qualifiers 17 or 28, respectively. Otherwise, static object requests sent with qualifiers 00, 01, 06, 07, or 08, will be responded with qualifiers 00 or 01 (for change-event objects, qualifiers 17 or 28 are always responded.)

Note 3: Cold restarts are implemented the same as warm restarts – the G60 is not restarted, but the DNP process is restarted.

Table F–2: IMPLEMENTATION TABLE (Sheet 3 of 4)

OBJECT			REQUEST		RESPONSE	
OBJECT NO.	VARIATION NO.	DESCRIPTION	FUNCTION CODES (DEC)	QUALIFIER CODES (HEX)	FUNCTION CODES (DEC)	QUALIFIER CODES (HEX)
23 cont'd	5	32-Bit Frozen Counter Event with Time	1 (read)	06 (no range, or all) 07, 08 (limited quantity)	129 (response) 130 (unsol. resp.)	17, 28 (index)
	6	16-Bit Frozen Counter Event with Time	1 (read)	06 (no range, or all) 07, 08 (limited quantity)	129 (response) 130 (unsol. resp.)	17, 28 (index)
30	0	Analog Input (Variation 0 is used to request default variation)	1 (read) 22 (assign class)	00, 01 (start-stop) 06 (no range, or all) 07, 08 (limited quantity) 17, 28 (index)		
	1	32-Bit Analog Input	1 (read) 22 (assign class)	00, 01 (start-stop) 06 (no range, or all) 07, 08 (limited quantity) 17, 28 (index)	129 (response)	00, 01 (start-stop) 17, 28 (index) *(see Note 2)*
	2	16-Bit Analog Input	1 (read) 22 (assign class)	00, 01 (start-stop) 06 (no range, or all) 07, 08 (limited quantity) 17, 28 (index)	129 (response)	00, 01 (start-stop) 17, 28 (index) *(see Note 2)*
	3	32-Bit Analog Input without Flag	1 (read) 22 (assign class)	00, 01 (start-stop) 06 (no range, or all) 07, 08 (limited quantity) 17, 28 (index)	129 (response)	00, 01 (start-stop) 17, 28 (index) *(see Note 2)*
	4	16-Bit Analog Input without Flag	1 (read) 22 (assign class)	00, 01 (start-stop) 06 (no range, or all) 07, 08 (limited quantity) 17, 28 (index)	129 (response)	00, 01 (start-stop) 17, 28 (index) *(see Note 2)*
	5	short floating point	1 (read) 22 (assign class)	00, 01 (start-stop) 06(no range, or all) 07, 08(limited quantity) 17, 28(index)	129 (response)	00, 01 (start-stop) 17, 28 (index) *(see Note 2)*
32	0	Analog Change Event (Variation 0 is used to request default variation)	1 (read)	06 (no range, or all) 07, 08 (limited quantity)		
	1	32-Bit Analog Change Event without Time	1 (read)	06 (no range, or all) 07, 08 (limited quantity)	129 (response) 130 (unsol. resp.)	17, 28 (index)
	2	16-Bit Analog Change Event without Time	1 (read)	06 (no range, or all) 07, 08 (limited quantity)	129 (response) 130 (unsol. resp.)	17, 28 (index)
	3	32-Bit Analog Change Event with Time	1 (read)	06 (no range, or all) 07, 08 (limited quantity)	129 (response) 130 (unsol. resp.)	17, 28 (index)
	4	16-Bit Analog Change Event with Time	1 (read)	06 (no range, or all) 07, 08 (limited quantity)	129 (response) 130 (unsol. resp.)	17, 28 (index)
	5	short floating point Analog Change Event without Time	1 (read)	06 (no range, or all) 07, 08 (limited quantity)	129 (response) 130 (unsol. resp.)	17, 28 (index)
	7	short floating point Analog Change Event with Time	1 (read)	06 (no range, or all) 07, 08 (limited quantity)	129 (response) 130 (unsol. resp.)	17, 28 (index)
34	0	Analog Input Reporting Deadband (Variation 0 is used to request default variation)	1 (read)	00, 01 (start-stop) 06 (no range, or all) 07, 08 (limited quantity) 17, 28 (index)		
	1	16-bit Analog Input Reporting Deadband (default – see Note 1)	1 (read)	00, 01 (start-stop) 06 (no range, or all) 07, 08 (limited quantity) 17, 28 (index)	129 (response)	00, 01 (start-stop) 17, 28 (index) *(see Note 2)*
			2 (write)	00, 01 (start-stop) 07, 08 (limited quantity) 17, 28 (index)		

Note 1: A default variation refers to the variation responded when variation 0 is requested and/or in class 0, 1, 2, or 3 scans. The default variations for object types 1, 2, 20, 21, 22, 23, 30, and 32 are selected via relay settings. See the Communications section in Chapter 5 for details. This optimizes the class 0 poll data size.

Note 2: For static (non-change-event) objects, qualifiers 17 or 28 are only responded when a request is sent with qualifiers 17 or 28, respectively. Otherwise, static object requests sent with qualifiers 00, 01, 06, 07, or 08, will be responded with qualifiers 00 or 01 (for change-event objects, qualifiers 17 or 28 are always responded.)

Note 3: Cold restarts are implemented the same as warm restarts – the G60 is not restarted, but the DNP process is restarted.

Table F–2: IMPLEMENTATION TABLE (Sheet 4 of 4)

OBJECT			REQUEST		RESPONSE	
OBJECT NO.	VARIATION NO.	DESCRIPTION	FUNCTION CODES (DEC)	QUALIFIER CODES (HEX)	FUNCTION CODES (DEC)	QUALIFIER CODES (HEX)
34 cont'd	2	32-bit Analog Input Reporting Deadband	1 (read)	00, 01 (start-stop) 06 (no range, or all) 07, 08 (limited quantity) 17, 28 (index)	129 (response)	00, 01 (start-stop) 17, 28 (index) *(see Note 2)*
			2 (write)	00, 01 (start-stop) 07, 08 (limited quantity) 17, 28 (index)		
	3	Short floating point Analog Input Reporting Deadband	1 (read)	00, 01 (start-stop) 06 (no range, or all) 07, 08 (limited quantity) 17, 28 (index)	129 (response)	00, 01 (start-stop) 17, 28 (index) *(see Note 2)*
50	1	Time and Date (default – see Note 1)	1 (read) 2 (write)	00, 01 (start-stop) 06 (no range, or all) 07 (limited qty=1) 08 (limited quantity) 17, 28 (index)	129 (response)	00, 01 (start-stop) 17, 28 (index) *(see Note 2)*
52	2	Time Delay Fine			129 (response)	07 (limited quantity) (quantity = 1)
60	0	Class 0, 1, 2, and 3 Data	1 (read) 20 (enable unsol) 21 (disable unsol) 22 (assign class)	06 (no range, or all)		
	1	Class 0 Data	1 (read) 22 (assign class)	06 (no range, or all)		
	2	Class 1 Data	1 (read) 20 (enable unsol) 21 (disable unsol) 22 (assign class)	06 (no range, or all) 07, 08 (limited quantity)		
	3	Class 2 Data				
	4	Class 3 Data				
70	0	File event - any variation	1 (read)	06 (no range, or all) 07, 08 (limited quantity)		
			22 (assign class)	06 (no range, or all)		
	2	File authentication	29 (authenticate)	5b (free format)	129 (response)	5b (free format)
	3	File command	25 (open) 27 (delete)	5b (free format)		
	4	File command status	26 (close) 30 (abort)	5b (free format)	129 (response) 130 (unsol. resp.)	5b (free format)
	5	File transfer	1 (read) 2 (write)	5b (free format)	129 (response) 130 (unsol. resp.)	5b (free format)
	6	File transfer status			129 (response) 130 (unsol. resp.)	5b (free format)
	7	File descriptor	28 (get file info.)	5b (free format)	129 (response) 130 (unsol. resp.)	5b (free format)
80	1	Internal Indications	1 (read)	00, 01 (start-stop) (index =7)	129 (response)	00, 01 (start-stop)
			2 (write) *(see Note 3)*	00 (start-stop) (index =7)		
---		No Object (function code only) *see Note 3*	13 (cold restart)			
---		No Object (function code only)	14 (warm restart)			
---		No Object (function code only)	23 (delay meas.)			

Note 1: A default variation refers to the variation responded when variation 0 is requested and/or in class 0, 1, 2, or 3 scans. The default variations for object types 1, 2, 20, 21, 22, 23, 30, and 32 are selected via relay settings. See the Communications section in Chapter 5 for details. This optimizes the class 0 poll data size.

Note 2: For static (non-change-event) objects, qualifiers 17 or 28 are only responded when a request is sent with qualifiers 17 or 28, respectively. Otherwise, static object requests sent with qualifiers 00, 01, 06, 07, or 08, will be responded with qualifiers 00 or 01 (for change-event objects, qualifiers 17 or 28 are always responded.)

Note 3: Cold restarts are implemented the same as warm restarts – the G60 is not restarted, but the DNP process is restarted.

F.2.1 BINARY INPUT POINTS

The DNP binary input data points are configured through the **PRODUCT SETUP** ⇨⇩ **COMMUNICATIONS** ⇨⇩ **DNP / IEC104 POINT LISTS** ⇨ **BINARY INPUT / MSP POINTS** menu. See the Communications section of Chapter 5 for details. When a freeze function is performed on a binary counter point, the frozen value is available in the corresponding frozen counter point.

BINARY INPUT POINTS

Static (Steady-State) Object Number: **1**

Change Event Object Number: **2**

Request Function Codes supported: **1 (read), 22 (assign class)**

Static Variation reported when variation 0 requested: **2 (Binary Input with status), Configurable**

Change Event Variation reported when variation 0 requested: **2 (Binary Input Change with Time), Configurable**

Change Event Scan Rate: **8 times per power system cycle**

Change Event Buffer Size: **500**

Default Class for All Points: **1**

Supported Control Relay Output Block fields: Pulse On, Pulse Off, Latch On, Latch Off, Paired Trip, Paired Close.

BINARY OUTPUT STATUS POINTS

Object Number: **10**

Request Function Codes supported: **1 (read)**

Default Variation reported when Variation 0 requested: **2 (Binary Output Status)**

CONTROL RELAY OUTPUT BLOCKS

Object Number: **12**

Request Function Codes supported: **3 (select), 4 (operate), 5 (direct operate), 6 (direct operate, noack)**

Table F–3: BINARY/CONTROL OUTPUTS

POINT	NAME/DESCRIPTION
0	Virtual Input 1
1	Virtual Input 2
2	Virtual Input 3
3	Virtual Input 4
4	Virtual Input 5
5	Virtual Input 6
6	Virtual Input 7
7	Virtual Input 8
8	Virtual Input 9
9	Virtual Input 10
10	Virtual Input 11
11	Virtual Input 12
12	Virtual Input 13
13	Virtual Input 14
14	Virtual Input 15
15	Virtual Input 16
16	Virtual Input 17
17	Virtual Input 18
18	Virtual Input 19
19	Virtual Input 20
20	Virtual Input 21
21	Virtual Input 22
22	Virtual Input 23
23	Virtual Input 24
24	Virtual Input 25
25	Virtual Input 26
26	Virtual Input 27
27	Virtual Input 28
28	Virtual Input 29
29	Virtual Input 30
30	Virtual Input 31
31	Virtual Input 32

Table F–3: BINARY/CONTROL OUTPUTS

POINT	NAME/DESCRIPTION
32	Virtual Input 33
33	Virtual Input 34
34	Virtual Input 35
35	Virtual Input 36
36	Virtual Input 37
37	Virtual Input 38
38	Virtual Input 39
39	Virtual Input 40
40	Virtual Input 41
41	Virtual Input 42
42	Virtual Input 43
43	Virtual Input 44
44	Virtual Input 45
45	Virtual Input 46
46	Virtual Input 47
47	Virtual Input 48
48	Virtual Input 49
49	Virtual Input 50
50	Virtual Input 51
51	Virtual Input 52
52	Virtual Input 53
53	Virtual Input 54
54	Virtual Input 55
55	Virtual Input 56
56	Virtual Input 57
57	Virtual Input 58
58	Virtual Input 59
59	Virtual Input 60
60	Virtual Input 61
61	Virtual Input 62
62	Virtual Input 63
63	Virtual Input 64

F.2.3 COUNTERS

The following table lists both Binary Counters (Object 20) and Frozen Counters (Object 21). When a freeze function is performed on a Binary Counter point, the frozen value is available in the corresponding Frozen Counter point.

BINARY COUNTERS

Static (Steady-State) Object Number: **20**

Change Event Object Number: **22**

Request Function Codes supported: **1 (read), 7 (freeze), 8 (freeze noack), 9 (freeze and clear), 10 (freeze and clear, noack), 22 (assign class)**

Static Variation reported when variation 0 requested: **1 (32-Bit Binary Counter with Flag)**

Change Event Variation reported when variation 0 requested: **1 (32-Bit Counter Change Event without time)**

Change Event Buffer Size: **10**

Default Class for all points: **3**

FROZEN COUNTERS

Static (Steady-State) Object Number: **21**

Change Event Object Number: **23**

Request Function Codes supported: **1 (read)**

Static Variation reported when variation 0 requested: **1 (32-Bit Frozen Counter with Flag)**

Change Event Variation reported when variation 0 requested: **1 (32-Bit Frozen Counter Event without time)**

Change Event Buffer Size: **10**

Default Class for all points: **3**

F

Table F–4: BINARY AND FROZEN COUNTERS

POINT INDEX	NAME/DESCRIPTION
0	Digital Counter 1
1	Digital Counter 2
2	Digital Counter 3
3	Digital Counter 4
4	Digital Counter 5
5	Digital Counter 6
6	Digital Counter 7
7	Digital Counter 8
8	Oscillography Trigger Count
9	Events Since Last Clear

A counter freeze command has no meaning for counters 8 and 9. G60 Digital Counter values are represented as 32-bit integers. The DNP 3.0 protocol defines counters to be unsigned integers. Care should be taken when interpreting negative counter values.

F.2.4 ANALOG INPUTS

The DNP analog input data points are configured through the **PRODUCT SETUP** ⇨⇩ **COMMUNICATIONS** ⇨⇩ **DNP / IEC104 POINT LISTS** ⇨ **ANALOG INPUT / MME POINTS** menu. See the Communications section of Chapter 5 for details.

It is important to note that 16-bit and 32-bit variations of analog inputs are transmitted through DNP as signed numbers. Even for analog input points that are not valid as negative values, the maximum positive representation is 32767 for 16-bit values and 2147483647 for 32-bit values. This is a DNP requirement.

The deadbands for all Analog Input points are in the same units as the Analog Input quantity. For example, an Analog Input quantity measured in volts has a corresponding deadband in units of volts. This is in conformance with DNP Technical Bulletin 9809-001: Analog Input Reporting Deadband. Relay settings are available to set default deadband values according to data type. Deadbands for individual Analog Input Points can be set using DNP Object 34.

Static (Steady-State) Object Number: **30**

Change Event Object Number: **32**

Request Function Codes supported: **1 (read), 2 (write, deadbands only), 22 (assign class)**

Static Variation reported when variation 0 requested: **1 (32-Bit Analog Input)**

Change Event Variation reported when variation 0 requested: **1 (Analog Change Event without Time)**

Change Event Scan Rate: defaults to **500 ms**

Change Event Buffer Size: **256**

Default Class for all Points: **2**

F

F

G.1.1 RADIUS SERVER CONFIGURATION

The following procedure is an example of how to set up a simple RADIUS server. You install the RADIUS server software on a separate computer. In this example, we use FreeRADIUS third-party software.

1. Download and install FreeRADIUS from www.freeradius.org as the RADIUS server. This is a Windows 32-bit installation that is known to work. If you try another third-party tool and it does not work, use the FreeRADIUS software.
2. Open the radiusd.conf file in the <Path_to_Radius>\etc\raddb folder, locate the "bind_address" field, and enter your RADIUS server IP address. An example is

   ```
   bind_address = 10.14.61.122
   ```

   Text editor software that supports direct editing and saving of UNIX text encodings and line breaks, such as EditPad Lite, is needed for this editing.
3. In the users.conf file in the <Path_to_Radius>\etc\raddb folder, add the following text to configure a user "Tester" with an Administrator role.

   ```
   Tester               User-Password == "TesterPw1#"
                       GE-UR-Role = Administrator
   ```
4. In the clients.conf file in the <Path_to_Radius>\etc\raddb folder, add the following text to define the UR as a RADIUS client, where the client IP address is 10.14.61.132, the shared secret specified here is also configured on the UR device for successful authentication, and the shortname is a short, optional alias that can be used in place of the IP address.

   ```
   client 10.14.61.132 {
   secret = Testing!123
   shortname = ur1-test
   }
   ```

   Alternatively, you can specify one secret for a network of clients, where in the following example the clients are all within the 10.14.61.0/24 subnet and the shared secret specified here is also configured on all the UR devices in the subnet for successful authentication.

   ```
   client 10.14.61.0/24 {
   secret = Testing!123
   shortname = net1-test
   }
   ```
5. In the <Path_to_Radius>\etc\raddb folder, create a file called dictionary.ge and add the following content.

   ```
   # ############################################################
   #  GE VSAs
   ############################################################

   VENDOR                          GE              2910

   # Management authorization
   BEGIN-VENDOR                    GE

   # Role ID
   ATTRIBUTE                       GE-UR-Role      1           integer

   # GE-UR-ROLE values
   VALUE GE-UR-Role                Administrator   1
   VALUE GE-UR-Role                Supervisor      2
   VALUE GE-UR-Role                Engineer        3
   VALUE GE-UR-Role                Operator        4
   VALUE GE-UR-Role                Observer        5

   END-VENDOR                      GE
   ############################################################
   ```
6. In the dictionary file in the <Path_to_Radius>\etc\raddb folder, add the following line.

```
$INCLUDE dictionary.ge
```

For example, the file can look like the following:

```
$INCLUDE ../share/freeradius/dictionary
$INCLUDE dictionary.ge
```

7. For the first start, run the RADIUS server in debug mode to ensure that there are no compiling errors.

   ```
   <Path_to_Radius>/start_radiusd_debug.bat
   ```

8. Set up the RADIUS parameters on the UR as follows.

   If logging in, select **Device** for the **Authentication Type**, and use Administrator for the **User Name**. The default password is "ChangeMe1#".

   Access **Settings > Product Setup > Security**. Configure the IP address (10.14.61.122 in this example) and ports (default values in this example) for the RADIUS server. Leave the GE vendor ID field at the default of 2910. Update the RADIUS shared secret (Testing!123 in this example) as specified in the clients.conf file. Restart the relay for the IP address and port changes to take effect.

9. Verify operation. Log in to the UR software as follows. In the login window, select **Server** as the **Authentication Type**, enter the user name entered (for example user name Tester and password "TesterPw1#"). Check that the RADIUS server log file shows the access with an "Access-Accept" entry.

Table H–1: REVISION HISTORY

MANUAL P/N	G60 REVISION	RELEASE DATE	ECO
1601-0110-B1	2.8x	27 September 2001	URG-001
1601-0110-B2	2.9x	03 December 2001	URG-002
1601-0110-B3	2.9x	23 January 2001	URG-003
1601-0110-C1	3.0x	02 July 2002	URG-004
1601-0110-C2	3.1x	30 August 2002	URG-005
1601-0110-C3	3.0x	18 November 2002	URG-006
1601-0110-C4	3.1x	18 November 2002	URG-007
1601-0110-C5	3.1x	16 January 2003	URG-008
1601-0110-C6	3.0x	27 January 2003	URG-009
1601-0110-C7	3.1x	27 January 2003	URG-010
1601-0110-C8	3.0x	11 February 2003	URG-011
1601-0110-C9	3.1x	11 February 2003	URG-013
1601-0110-D1	3.2x	11 February 2003	URG-012
1601-0110-D2	3.2x	02 June 2003	URX-084
1601-0110-E1	3.3x	01 May 2003	URX-080
1601-0110-E2	3.3x	29 May 2003	URX-083
1601-0110-F1	3.4x	10 December 2003	URX-111
1601-0110-F2	3.4x	30 January 2004	URX-115
1601-0110-G1	4.0x	23 March 2004	URX-123
1601-0110-G2	4.0x	17 May 2004	URX-136
1601-0110-H1	4.2x	30 June 2004	URX-145
1601-0110-H2	4.2x	23 July 2004	URX-151
1601-0110-J1	4.4x	15 September 2004	URX-156
1601-0110-K1	4.6x	15 February 2005	URX-176
1601-0110-L1	4.8x	05 August 2005	URX-202
1601-0110-M1	4.9x	15 December 2005	URX-208
1601-0110-M2	4.9x	27 February 2006	URX-214
1601-0110-N1	5.0x	31 March 2006	URX-217
1601-0110-N2	5.0x	26 May 2006	URX-220
1601-0110-P1	5.2x	23 October 2006	URX-230
1601-0110-P2	5.2x	24 January 2007	URX-232
1601-0110-R1	5.4x	01 July 2007	URX-242
1601-0110-R2	5.4x	31 August 2007	URX-246
1601-0110-R3	5.4x	17 October 2007	URX-251
1601-0110-S1	5.5x	7 December 2007	URX-253
1601-0110-S2	5.5x	22 February 2008	URX-258
1601-0110-S3	5.5x	12 March 2008	URX-260
1601-0110-T1	5.6x	27 June 2008	08-0390
1601-0110-U1	5.7x	29 May 2009	09-0938
1601-0110-U2	5.7x	30 September 2009	09-1165
1601-0110-V1	5.8x	29 May 2010	09-1457
1601-0110-V2	5.8x	04 January 2011	11-2237
1601-0110-W1	5.9x	12 January 2011	11-2227
1601-0110-X1	6.0x	21 December 2011	11-2840
1601-0110-X2	6.0x	5 April 2012	12-3254

Table H–1: REVISION HISTORY

MANUAL P/N	G60 REVISION	RELEASE DATE	ECO
1601-0110-Y1	7.0x	30 September 2012	12-3529
1601-0110-Y2	7.0x	11 November 2012	12-3601
1601-0110-Z1	7.1x	30 March 2013	13-0126
1601-0110-AA1	7.2x	1 August 2013	13-0401
1601-0110-AA2	7.2x	31 December 2014	14-1732
1601-0110-AA3	7.2x	1 September 2015	15-2215
1601-0110-AA4	7.2x	15 April 2016	16-2786
1601-0110-AA5	7.2x	15 August 2017	17-3978
1601-0110-AA6	7.2x	24 May 2021	21-6381
1601-0110-AA7	7.2x	11 August 2021	21-6542

H.1.2 CHANGES TO THE G60 MANUAL

Table H–2: MAJOR UPDATES FOR G60 MANUAL REVISION AA7

PAGE (AA6)	PAGE (AA7)	CHANGE	DESCRIPTION
---	---	Update	General revision
7-15	7-15	Add	Added Instantaneous Protection Elements Trip Security section to self-tests

Table H–3: MAJOR UPDATES FOR G60 MANUAL REVISION AA6

PAGE (AA5)	PAGE (AA6)	CHANGE	DESCRIPTION
---	---	Update	General revision
2-	2-	Update	Updated Dropout Level specification for several elements, changing percent range to a number
2-	2-	Delete	Deleted end-of-manufacturing modules 2G, 74, 75, 7E, 7L from order code tables
2-8	2-8	Update	Updated order codes from SH / SL to RH / RL for the redundant power supply for horizontal units. The power supply modules were upgraded in 2014 to SH and SL, but the order codes when purchasing a UR remain as RH and RL so that customers do not need to change order codes. The order codes for the power supply replacement modules are correct as SH and SL.
2-8	2-8	Add	Added order codes for Inter-relay communication modules in U column for horizontal unit
3-	3-	Update	Updated typical wiring diagram, CPU Module Communications Wiring figure, and Options for IRIG-B Connection figure
6-	6-	Add	Added Remote Resources to Actual Values menu and added its Field Unit section
B-	B-	Update	Updated Modbus memory map and F codes
G-	G-	Update	Updated RADIUS appendix

Table H–4: MAJOR UPDATES FOR G60 MANUAL REVISION AA5

PAGE (AA4)	PAGE (AA5)	CHANGE	DESCRIPTION
---	---	Update	General revision
---	---	Update	Updated CT Failure Detector by adding number of elements in FlexLogic operands table, settings, and Modbus memory map
3-36	3-36	Update	Updated RS422 and Fiber Interface Connection figure for the clock channels (from 7a and 7b to 1a and 1b)
---	8-6	Add	Added Saturation Detector section to Theory of Operation chapter

Table H–5: MAJOR UPDATES FOR G60 MANUAL REVISION AA4

PAGE (AA3)	PAGE (AA4)	CHANGE	DESCRIPTION
---	---	Update	General revision, including updated branding from GE Digital Energy to GE Grid Solutions
---	iii	Add	Added Addendum to account for Distance Element differences between firmware versions 7.21 and 7.24. Also changed Theory of Operation chapter for same, specifically Fault-Type Characteristic section and Overcurrent Supervision section.
---	---	Delete	Deleted EAC logo from title page and deleted EAC certification from Approvals specifications because document not translated into Russian

Table H–6: MAJOR UPDATES FOR G60 MANUAL REVISION AA3

PAGE (AA2)	PAGE (AA3)	CHANGE	DESCRIPTION
---	---	Update	General revision throughout document
---	---	Update	Updated numbers of elements throughout document
---	---	Add	Added EAC compliance information throughout, including logo on title page, rear panel, added specifications, added life expectancy and decommissioning, added sections on Uninstall and Clear Files and Data, Repairs, Storage, and Disposal
2-17	2-17	Add	Added UR Signal Processing section
4-22	4-22	Delete	Deleted Standard Faceplate section on how to customize LED and blank panels. Clear Lexan front cover (part number 1501-0014) no longer being sold. Units with blank LED panels no longer being sold.
5-147	5-147	Update	Updated FlexLogic operands table
A-	A-	Update	Updated FlexAnalog and FlexInteger tables
B-	B-	Update	Updated Modbus memory map and F codes

Table H–7: MAJOR UPDATES FOR G60 MANUAL REVISION AA2

PAGE (AA1)	PAGE (AA2)	CHANGE	DESCRIPTION
---	---	Update	General revision throughout document
---	---	Update	Updated references to digital inputs/outputs to contact inputs/outputs for consistency
---	---	Add	Added Breaker Flashover content (chapters 2, 5, Modbus memory map), which is supported by the G60
2-1	2-1	Update	Updated Table 2-1 ANSI device table and Figure 2-1 single-line diagram
5-23	5-23	Add	Added Syslog Format section
5-32	5-32	Add	Added Far-End Fault Indication (FEFI) section
5-212	5-212	Add	Added Split Phase Function setting to enabled and disable the function
B-	B-	Update	Updated Modbus memory map and F codes
H-8	H-8	Update	Updated product warranty from 24 months to 10 years

Table H–8: MAJOR UPDATES FOR G60 MANUAL REVISION AA1 (Sheet 1 of 2)

PAGE (Z1)	PAGE (AA1)	CHANGE	DESCRIPTION
---	---	Add	Added content for IEC 60870-5-103 throughout document
2-2	2-2	Update	Updated Figure 2-1 Single Line Diagram
2-	2-	Update	Updated order codes
2-	2-	Update	Updated specifications
5-114	5-114	Update	Updated hysteresis numbers and logic diagrams in section 5.4.7 Phasor Measurement Unit

Table H–8: MAJOR UPDATES FOR G60 MANUAL REVISION AA1 (Sheet 2 of 2)

PAGE (Z1)	PAGE (AA1)	CHANGE	DESCRIPTION
6-21	6-21	Add	Added Z_{BASE} to Table 6-2 FlexElements Base Units
---	6-25	Add	Added Distance section for Actual Values > Metering > Distance
8-	---	Delete	Deleted chapter 8 on security, moving content to other chapters
---	11-	Add	Added Maintenance chapter, moving content from other chapters and adding new instructions to replace the battery
---	D-	Add	Added new appendix on IEC 60870-5-103 interoperability

H.2.1 STANDARD ABBREVIATIONS

A..... Ampere
AC ..... Alternating Current
A/D ..... Analog to Digital
AE ..... Accidental Energization, Application Entity
AMP ..... Ampere
ANG ..... Angle
ANSI..... American National Standards Institute
AR ..... Automatic Reclosure
ASDU ..... Application-layer Service Data Unit
ASYM ..... Asymmetry
AUTO ..... Automatic
AUX..... Auxiliary
AVG..... Average

BCS..... Best Clock Selector
BER..... Bit Error Rate
BF..... Breaker Fail
BFI..... Breaker Failure Initiate
BKR..... Breaker
BLK ..... Block
BLKG..... Blocking
BNC..... Bayonet Neill-Concelman
BPNT..... Breakpoint of a characteristic
BRKR ..... Breaker

CAP..... Capacitor
CC..... Coupling Capacitor
CCVT ..... Coupling Capacitor Voltage Transformer
CFG..... Configure / Configurable
.CFG..... Filename extension for oscillography files
CHK..... Check
CHNL ..... Channel
CLS ..... Close
CLSD..... Closed
CMND ..... Command
CMPRSN..... Comparison
CO..... Contact Output
COM..... Communication
COMM..... Communications
COMP ..... Compensated, Comparison
CONN..... Connection
CONT..... Continuous, Contact
CO-ORD..... Coordination
CPU..... Central Processing Unit
CRC ..... Cyclic Redundancy Code
CRT, CRNT .... Current
CSA..... Canadian Standards Association
CT ..... Current Transformer
CVT ..... Capacitive Voltage Transformer

D/A ..... Digital to Analog
DC (dc)..... Direct Current
DD..... Disturbance Detector
DFLT ..... Default
DGNST..... Diagnostics
DI..... Digital Input
DIFF ..... Differential
DIR..... Directional
DISCREP ..... Discrepancy
DIST ..... Distance
DMD ..... Demand
DNP..... Distributed Network Protocol
DPO ..... Dropout
DSP..... Digital Signal Processor
dt ..... Rate of Change
DTT ..... Direct Transfer Trip
DUTT..... Direct Under-reaching Transfer Trip

EAD..... Expert Arc Detector
ENCRMNT ..... Encroachment
EPRI..... Electric Power Research Institute
.EVT ..... Filename extension for event recorder files
EXT ..... Extension, External

F..... Field
FAIL..... Failure
FD ..... Fault Detector
FDH..... Fault Detector high-set
FDL..... Fault Detector low-set
FLA ..... Full Load Current
FO..... Fiber Optic
FREQ..... Frequency
FSK..... Frequency-Shift Keying
FTP ..... File Transfer Protocol
FxE ..... FlexElement™
FWD..... Forward

G..... Generator
GE..... General Electric
GND..... Ground
GNTR..... Generator
GOOSE..... General Object Oriented Substation Event
GPS ..... Global Positioning System

HARM ..... Harmonic / Harmonics
HCT ..... High Current Time
HGF ..... High-Impedance Ground Fault (CT)
HIZ..... High-Impedance and Arcing Ground
HMI ..... Human-Machine Interface
HTTP ..... Hyper Text Transfer Protocol
HYB ..... Hybrid

I..... Instantaneous
I_0..... Zero Sequence current
I_1..... Positive Sequence current
I_2..... Negative Sequence current
IA..... Phase A current
IAB ..... Phase A minus B current
IB ..... Phase B current
IBC..... Phase B minus C current
IC ..... Phase C current
ICA..... Phase C minus A current
ID ..... Identification
IED..... Intelligent Electronic Device
IEC..... International Electrotechnical Commission
IEEE..... Institute of Electrical and Electronic Engineers
IG..... Ground (not residual) current
Igd..... Differential Ground current
IN ..... CT Residual Current (3I0) or Input
INC SEQ..... Incomplete Sequence
INIT..... Initiate
INST..... Instantaneous
INV..... Inverse
I/O..... Input/Output
IOC ..... Instantaneous Overcurrent
IOV..... Instantaneous Overvoltage
IRIG ..... Inter-Range Instrumentation Group
ISO..... International Standards Organization
IUV..... Instantaneous Undervoltage

K0 ..... Zero Sequence Current Compensation
kA..... kiloAmpere
kV..... kiloVolt

LED..... Light Emitting Diode
LEO..... Line End Open
LFT BLD ..... Left Blinder
LOOP..... Loopback
LPU..... Line Pickup
LRA..... Locked-Rotor Current
LTC ..... Load Tap-Changer

M..... Machine
mA..... MilliAmpere
MAG..... Magnitude
MAN..... Manual / Manually
MAX..... Maximum
MIC ..... Model Implementation Conformance
MIN ..... Minimum, Minutes
MMI..... Man Machine Interface
MMS ..... Manufacturing Message Specification
MRT ..... Minimum Response Time
MSG..... Message
MTA..... Maximum Torque Angle
MTR..... Motor
MVA ..... MegaVolt-Ampere (total 3-phase)

MVA_A ..... MegaVolt-Ampere (phase A)
MVA_B ..... MegaVolt-Ampere (phase B)
MVA_C ..... MegaVolt-Ampere (phase C)
MVAR ..... MegaVar (total 3-phase)
MVAR_A..... MegaVar (phase A)
MVAR_B..... MegaVar (phase B)
MVAR_C ..... MegaVar (phase C)
MVARH ..... MegaVar-Hour
MW..... MegaWatt (total 3-phase)
MW_A..... MegaWatt (phase A)
MW_B ..... MegaWatt (phase B)
MW_C ..... MegaWatt (phase C)
MWH ..... MegaWatt-Hour

N..... Neutral
N/A, n/a ..... Not Applicable
NEG ..... Negative
NMPLT ..... Nameplate
NOM..... Nominal
NTR..... Neutral

O ..... Over
OC, O/C ..... Overcurrent
O/P, Op..... Output
OP ..... Operate
OPER ..... Operate
OPERATG..... Operating
O/S ..... Operating System
OSI..... Open Systems Interconnect
OSB..... Out-of-Step Blocking
OUT..... Output
OV ..... Overvoltage
OVERFREQ ... Overfrequency
OVLD ..... Overload

P..... Phase
PC ..... Phase Comparison, Personal Computer
PCNT ..... Percent
PF..... Power Factor (total 3-phase)
PF_A ..... Power Factor (phase A)
PF_B ..... Power Factor (phase B)
PF_C ..... Power Factor (phase C)
PFLL..... Phase and Frequency Lock Loop
PHS..... Phase
PICS..... Protocol Implementation & Conformance Statement
PKP ..... Pickup
PLC ..... Power Line Carrier
POS..... Positive
POTT..... Permissive Over-reaching Transfer Trip
PRESS ..... Pressure
PP ..... Power Profile
PRI ..... Primary
PROT ..... Protection
PSEL ..... Presentation Selector
pu ..... Per Unit
PUIB..... Pickup Current Block
PUIT ..... Pickup Current Trip
PUSHBTN ..... Pushbutton
PUTT..... Permissive Under-reaching Transfer Trip
PWM ..... Pulse Width Modulated
PWR..... Power

QUAD..... Quadrilateral

R..... Rate, Reverse
RCA..... Reach Characteristic Angle
REF ..... Reference
REM ..... Remote
REV..... Reverse
RI..... Reclose Initiate
RIP ..... Reclose In Progress
RGT BLD..... Right Blinder
RMA ..... Return Materials Authorization
RMS ..... Root Mean Square
ROCOF ..... Rate of Change of Frequency
ROD ..... Remote Open Detector
RST..... Reset
RSTR ..... Restrained
RTD..... Resistance Temperature Detector
RTU..... Remote Terminal Unit
RX (Rx) ..... Receive, Receiver

s ..... second
S ..... Sensitive
SAT ..... CT Saturation
SBO ..... Select Before Operate
SCADA..... Supervisory Control and Data Acquisition
SEC ..... Secondary
SEL ..... Select / Selector / Selection
SENS ..... Sensitive
SEQ ..... Sequence
SFTP..... Secure Shell (SSH) File Transfer Protocol, Secure File Transfer Protocol
SIR..... Source Impedance Ratio
SNTP ..... Simple Network Time Protocol
SRC ..... Source
SSB..... Single Side Band
SSEL..... Session Selector
STATS..... Statistics
SUPN..... Supervision
SUPV ..... Supervise / Supervision
SV ..... Supervision, Service
SYNC..... Synchrocheck
SYNCHCHK... Synchrocheck

T..... Time, transformer
TC ..... Thermal Capacity
TCP..... Transmission Control Protocol
TCU ..... Thermal Capacity Used
TD MULT..... Time Dial Multiplier
TEMP..... Temperature
TFTP..... Trivial File Transfer Protocol
THD ..... Total Harmonic Distortion
TMR..... Timer
TOC ..... Time Overcurrent
TOV..... Time Overvoltage
TRANS..... Transient
TRANSF ..... Transfer
TSEL..... Transport Selector
TUC ..... Time Undercurrent
TUV..... Time Undervoltage
TX (Tx)..... Transmit, Transmitter

U ..... Under
UC..... Undercurrent
UCA ..... Utility Communications Architecture
UDP ..... User Datagram Protocol
UL ..... Underwriters Laboratories
UNBAL..... Unbalance
UR..... Universal Relay
URC ..... Universal Recloser Control
.URS ..... Filename extension for settings files
UV..... Undervoltage

V/Hz ..... Volts per Hertz
V_0 ..... Zero Sequence voltage
V_1 ..... Positive Sequence voltage
V_2 ..... Negative Sequence voltage
VA ..... Phase A voltage
VAB..... Phase A to B voltage
VAG..... Phase A to Ground voltage
VARH ..... Var-hour voltage
VB ..... Phase B voltage
VBA..... Phase B to A voltage
VBG ..... Phase B to Ground voltage
VC..... Phase C voltage
VCA..... Phase C to A voltage
VCG ..... Phase C to Ground voltage
VF ..... Variable Frequency
VIBR ..... Vibration
VT ..... Voltage Transformer
VTFF..... Voltage Transformer Fuse Failure
VTLOS ..... Voltage Transformer Loss Of Signal

WDG ..... Winding
WH..... Watt-hour
w/ opt ..... With Option
WRT..... With Respect To

X ..... Reactance
XDUCER..... Transducer

XFMR..... Transformer

Z.....Impedance, Zone

H.3.1 GE MULTILIN WARRANTY

For products shipped as of 1 October 2013, GE Grid Solutions warrants most of its GE manufactured products for 10 years. For warranty details including any limitations and disclaimers, see the GE Grid Solutions Terms and Conditions at https://www.gegridsolutions.com/multilin/warranty.htm

For products shipped before 1 October 2013, the standard 24-month warranty applies.

Numerics

100% STATOR GROUND
  see also entry for STATOR GROUND
  FlexLogic operands 5-145
  logic 5-262
  Modbus registers B-43
  settings 5-260
  specifications 2-21
10BASE-F
  interface 3-43
  settings 5-30

A

ABBREVIATIONS H-5
AC CURRENT INPUTS 2-25, 3-14, 5-99
AC VOLTAGE INPUTS 2-25, 3-15
ACCESS VIOLATION MESSAGE 1-15
ACCIDENTAL ENERGIZATION
  FlexLogic operands 5-145
  logic 5-254
  Modbus registers B-41
  settings 5-253
  specifications 2-22
ACTIVATING THE RELAY 1-20, 4-27
ACTIVE SETTING GROUP 5-168
ACTUAL VALUES
  metering 6-13
  product information 6-33
  status 6-4
ADMINISTRATOR
  no automatic logout from front panel 5-19
AGGREGATOR ERROR MESSAGE 7-11
ALARM LEDs 5-77
ANSI DEVICE NUMBERS 2-1, 5-120
APPARENT POWER 2-24, 6-19
APPLICATION EXAMPLES
  breaker trip circuit integrity 5-298
  contact inputs 5-314
  sensitive directional power 5-257
APPROVALS 2-33
ARCHITECTURE 5-143
AUDIT LIST OF PORT NUMBERS 5-30
AUXILIARY OVERVOLTAGE
  FlexLogic operands 5-145
  logic 5-246
  Modbus registers B-50
  settings 5-246
  specifications 2-20
AUXILIARY UNDERVOLTAGE
  FlexLogic operands 5-145
  logic 5-245
  Modbus registers B-49
  settings 5-245
  specifications 2-20
AUXILIARY VOLTAGE CHANNEL 3-15
AUXILIARY VOLTAGE METERING 6-18
AWG WIRE SIZE 3-14, 3-38, 3-41, 3-43, 3-44

B

BANKS 5-6, 5-99, 5-100
BATTERY
  disposal 11-5
  replace 11-3
BATTERY FAILURE 7-9
BINARY INPUT POINTS F-8
BINARY OUTPUT POINTS F-9
BLOCK DIAGRAM 1-3
BLOCK SETTING 5-5
BREAKER CONTROL
  control of 2 breakers 4-23
  description 4-22
  dual breaker logic 5-107, 5-108
  FlexLogic operands 5-146
  settings 5-105
BREAKER FAILURE
  description 5-232
  determination 5-233
  FlexLogic operands 5-146
  logic 5-236
  main path sequence 5-233
  settings 5-231, 5-234
  specifications 2-22
BREAKER FLASHOVER
  FlexLogic operands 5-145
  logic 5-306
  Modbus registers B-18
  settings 5-302
  specifications 2-22
BREAKER-AND-A-HALF SCHEME 5-6
BRICK
  remote resources actual values 6-30
BRIGHTNESS 5-24

C

C37.94 COMMUNICATIONS 3-44, 3-46, 3-50
C37.94SM COMMUNICATIONS 3-48
CAPACITOR CONTROL
  Modbus registers B-25
CAUTIONS 1-1
CE APPROVALS 2-33
CHANNEL TESTS 6-11
CHANNELS
  banks 5-99, 5-100
CIRCUIT MONITORING APPLICATIONS 5-297
CLEANING 2-33
CLEAR
  files and records 11-8
CLEAR RECORDS 5-25, 7-2
CLEAR RELAY RECORDS
  Modbus registers B-69
  settings 5-25
CLOCK
  setting date and time 7-2
  settings 5-65
COMMANDS MENU 7-1

COMMUNICATIONS
10BASE-F 5-30
connecting to the UR 1-8, 1-16
CRC-16 error checking B-2
DNP 5-37, F-1
EGD 5-57
G.703 3-39
HTTP 5-55
IEC 60870-5-10 5-59
IEC 60870-5-104 protocol 5-56
IEC 61850 5-319
inter-relay communications 2-30
Modbus 5-35, 5-65, B-1, B-4
Modbus registers B-29
network 5-30
overview 1-18
RS232 3-29
RS485 3-32
settings 5-30, 5-37, 5-42, 5-56, 5-57, 5-59, 5-65
specifications 2-29, 2-30
UCA/MMS 5-321
web server 5-55
COMPATIBILITY 1-3
COMTRADE B-7, B-8
CONDUCTED RFI 2-32
CONTACT INPUTS
actual values 6-4
dry connections 3-22
FlexLogic operands 5-152
Modbus registers B-14, B-21, B-63, B-65
settings 5-313
specifications 2-25
thresholds 5-313
wet connections 3-22
CONTACT OUTPUTS
actual values 6-5
FlexLogic operands 5-152
Modbus registers B-14, B-21, B-75
settings 5-316
CONTROL ELEMENTS 5-274
CONTROL POWER
description 3-14
specifications 2-27
CONTROL PUSHBUTTONS
FlexLogic operands 5-145
Modbus registers B-69
settings 5-79
specifications 2-23
COUNTERS
actual values 6-7
settings 5-299
CPU WIRING 3-29
CRC ALARM 5-94
CRC-16 ALGORITHM B-2
CRITICAL FAILURE RELAY 2-27, 3-13
CSA APPROVAL 2-33
CT BANKS
settings 5-99
CT FAILURE
FlexLogic operands 5-146
logic 5-308
settings 5-307
CT INPUTS 3-15, 5-6, 5-99
CT WIRING 3-15
CURRENT BANK 5-99
CURRENT DIFFERENTIAL
Modbus registers B-19
CURRENT HARMONICS 2-25, 6-21
CURRENT METERING
actual values 6-17
specifications 2-24
CURVES
definite time 5-195, 5-240
FlexCurves 5-112, 5-195
IAC 5-194
IEC 5-193
IEEE 5-192
inverse time undervoltage 5-240
types 5-191
CYBERSENTRY
FlexLogic operands 5-145
RS485 port limitation 5-16
system logs 5-22

D

DATA FORMATS, MODBUS B-81
DATA LOGGER
clearing 5-25, 7-2
Modbus B-8
Modbus registers B-15, B-31
settings 5-74
specifications 2-24
via COMTRADE B-7
DATE 7-2
DCMA INPUTS 6-27
Modbus registers B-23, B-76
settings 5-331
specifications 2-26
DCMA OUTPUTS
description 3-27
Modbus registers B-53, B-54
settings 5-338
specifications 2-27
DECOMMISSION 11-8
DEFINITE TIME CURVE 5-195, 5-240
DELETE FILES AND RECORDS 11-8
DESIGN 1-3
DEVICE ID 5-320
DEVICE PROFILE DOCUMENT F-1
DIELECTRIC STRENGTH 3-13
DIFFERENTIAL
stator 2-18, 5-188, 6-16
DIGITAL COUNTERS
actual values 6-7
FlexLogic operands 5-146
logic 5-300
Modbus registers B-11, B-12, B-13, B-14, B-57
settings 5-299
DIGITAL ELEMENTS
application example 5-298
FlexLogic operands 5-146
logic 5-297
Modbus registers B-51
settings 5-296
DIGITAL OUTPUTS
see entry for CONTACT OUTPUTS
DIMENSIONS 3-1, 3-3
DIRECT DEVICES
actual values 6-9
Modbus registers B-24
settings 5-323

DIRECT I/O
see also DIRECT INPUTS and DIRECT OUTPUTS
application example 5-324, 5-325
configuration examples 5-88, 5-91, 5-94, 5-95
settings 5-88, 5-94, 5-95, 5-323
DIRECT INPUTS
actual values 6-9
application example 5-324, 5-325
clearing counters 7-2
FlexLogic operands 5-152
Modbus registers B-15, B-24, B-70, B-71
settings 5-323
specifications 2-26
DIRECT OUTPUTS
application example 5-324, 5-325
clearing counters 7-2
Modbus registers B-15, B-70, B-71
settings 5-324
DIRECT RING BREAK MESSAGE 7-10
DIRECTIONAL OVERCURRENT
see PHASE, GROUND, and NEUTRAL DIRECTIONAL entries
DIRECTIONAL POLARIZATION 5-201
DIRECTIONAL POWER
see entry for SENSITIVE DIRECTIONAL POWER
DISCONNECT SWITCH
FlexLogic operands 5-151
logic 5-111
settings 5-109
DISPLAY 1-18, 4-22, 5-24
DISPOSAL 11-11
DISTANCE
mho characteristic 5-172, 5-173
Modbus registers B-48
phase 2-18, 5-171
settings 5-170
DISTURBANCE DETECTOR
FlexLogic™ operands 5-150
internal 5-102
Modbus registers B-39
DNA-1 BIT PAIR 5-322
DNP COMMUNICATIONS
binary counters F-10
binary input points F-8
binary output points F-9
control relay output blocks F-9
device profile document F-1
frozen counters F-10
implementation table F-4
Modbus registers B-30
settings 5-37

E

EGD PROTOCOL
actual values 6-10
Modbus registers B-50
settings 5-57
ELECTROSTATIC DISCHARGE 2-32
ELEMENTS 5-4
EMAIL ADDRESS FOR SUPPORT 1-2
END OF LIFE 11-11
ENERGY METERING
actual values 6-20
Modbus registers B-18
specifications 2-24, 2-25
ENERGY METERING, CLEARING 5-25, 7-2
ENERVISTA UR SETUP
creating a site list 4-1
event recorder 4-2
firmware upgrades 4-2
installation 1-5
introduction 4-1
oscillography 4-2
overview 4-1
requirements 1-5
ENHANCED FRONT PANEL
Rev. 1 and 2 explained 3-1
EQUATIONS
definite time curve 5-195, 5-240
FlexCurve 5-195
I²t curves 5-195
IAC curves 5-194
IEC curves 5-193
IEEE curves 5-192
EQUIPMENT MISMATCH ERROR 7-8
ETHERNET
actual values 6-7
configuration 1-8
Modbus registers B-15
quick connect 1-10
settings 5-30
EVENT CAUSE INDICATORS 4-15, 4-16
EVENT RECORDER
actual values 6-31
clearing 5-25, 7-2
Modbus B-8
Modbus registers B-23
specifications 2-24
via EnerVista software 4-2
EVENTS
syslog 5-23
EVENTS SETTING 5-5
EXCEPTION RESPONSES B-6
EXCITATION, LOSS OF
see entry for LOSS OF EXCITATION

F

F485 1-18
FACEPLATE 3-1, 3-3
FACEPLATE PANELS 4-13
FACTORY DEFAULT RESET 5-8
FAR-END FAULT INDICATION 5-31
FAST FORM-C RELAY 2-27
FAST TRANSIENT TESTING 2-32
FAX NUMBER 1-2
FEATURES 2-1
FGM FAILURE MESSAGE 7-13
FIBER SIGNAL LOSS DETECTION 5-31
FIELD GROUND FAULT
settings 5-270, 5-272
specifications 2-21
FIELD GROUND FAULT DETECTOR
FlexLogic operands 5-147
FILE TRANSFER BY IEC 61850 ..... C-2
FILES
delete 11-8
FIRMWARE REVISION 6-33
FIRMWARE UPGRADES 4-2
FLASH MEMORY 11-8
FLASH MEMORY DATA STORAGE 3-14
FLASH MESSAGES 5-24

FLEX STATE PARAMETERS
actual values 6-7, 6-8, 6-22
Modbus registers B-21, B-51
settings 5-85
specifications 2-23
FLEXANALOG A-1
FLEXCURVES
equation 5-195
Modbus registers B-57
settings 5-112
specifications 2-23
table 5-113
FLEXCURVES™
Modbus registers B-35
FLEXELEMENTS
actual values 6-23
direction 5-164
FlexLogic operands 5-147
hysteresis 5-164
Modbus registers B-53, B-55
pickup 5-164
scheme logic 5-163
settings 5-162, 5-163, 5-166
specifications 2-23
FLEXLOGIC
editing with EnerVista UR Setup 4-2
equation editor 5-161
error messages 7-8
example 5-143, 5-156
example equation 5-277
gate characteristics 5-154
locking to a serial number 4-9
Modbus registers B-36
operands 5-144, 5-145
operators 5-155
rules 5-155
security 4-8
specifications 2-23
timers 5-161
worksheet 5-158
FLEXLOGIC EQUATION EDITOR 5-161
FLEXLOGIC TIMERS
Modbus registers B-37
settings 5-161
FLEXLOGIC™
locking equation entries 4-8
FORCE CONTACT INPUTS 5-344
FORCE CONTACT OUTPUTS 5-345
FORCE TRIGGER 6-32
FORM-A RELAY
high impedance circuits 3-17
outputs 3-16, 3-17
specifications 2-27
FORM-C RELAY
outputs 3-16
specifications 2-27
FREQUENCY METERING
actual values 6-20
settings 5-101
specifications 2-25
FREQUENCY OUT-OF-BAND ACCUMULATION
actual values 6-22
clearing 7-2
FlexLogic operands 5-147
Modbus registers B-25
settings 5-289, 5-290
specifications 2-21
FREQUENCY RATE OF CHANGE
FlexLogic operands 5-147
Modbus registers B-16, B-58
settings 5-287
specifications 2-21
FREQUENCY TRACKING 5-101, 6-22
FREQUENCY, NOMINAL 5-101
FUNCTION SETTING 5-5
FUSE 2-26
FUSE FAILURE
see VT FUSE FAILURE
Fuses not field-replaceable 11-9

G

G.703 ..... 3-38, 3-39, 3-40, 3-44
G.703 WIRE SIZE 3-38
GATEWAY ADDRESS 5-32
GE TYPE IAC CURVES 5-194
GENERATOR UNBALANCE
FlexLogic operands 5-147
logic 5-225
Modbus registers B-42
settings 5-223
specifications 2-19
GPM-F FAILURE ERROR 7-14
GROUND CURRENT METERING 6-17
GROUND IOC
FlexLogic™ operands 5-147
logic 5-212
settings 5-211
GROUND TIME OVERCURRENT
see entry for GROUND TOC
GROUND TOC
FlexLogic™ operands 5-147
logic 5-211
Modbus registers B-39
settings 5-210
specifications 2-18
GROUP 1 SWITCH AFTER POWERUP 5-169
GROUPED ELEMENTS 5-168
GSSE 5-320, 5-321, 5-323, 6-6
GUARANTEE H-8

H

HARDFIBER
remote resources actual values 6-30
HARMONIC CONTENT 6-20
HARMONICS
actual values 6-20
Harmonics
specifications 2-25
HELP 1-2
HTTP PROTOCOL 5-55

I

IAC CURVES 5-194
IEC 60870-5-103
settings 5-59
IEC 60870-5-103 PROTOCOL
interoperability document D-1

IEC 60870-5-104 PROTOCOL
interoperability document E-1
settings 5-56
IEC 61850 GOOSE ANALOGS
settings 5-329
IEC 61850 GOOSE UINTEGERS
settings 5-330
IEC 61850 PROTOCOL
device ID 5-320
DNA2 assignments 5-322
error messages 7-11
FILE TRANSFER C-2
Modbus registers B-58, B-59, B-60, B-61, B-62, B-63, B-73
remote inputs 5-321
settings 5-42
UserSt-1 bit pair 5-323
IEC 870-5-103
explained 2-7
IEC CURVES 5-193
IED SETUP 1-5
IEEE C37.94 COMMUNICATIONS 3-44, 3-46, 3-50
IEEE CURVES 5-192
IN SERVICE INDICATOR 1-20, 7-8
INPUTS
AC current 2-25, 5-99
AC voltage 2-25, 5-100
contact inputs 2-25, 5-313, 5-344
DCmA inputs 2-26, 3-27
direct inputs 2-26
IRIG-B 2-26, 3-33
remote inputs 2-26, 5-319, 5-321, 5-322
RTD inputs 2-26, 3-27
virtual 5-315
INSPECTION CHECKLIST 1-2
INSTALLATION
communications 3-29, 3-30
CT inputs 3-14, 3-15
RS485 3-32
settings 5-97
INSTANTANEOUS OVERCURRENT
see PHASE, GROUND, and NEUTRAL IOC entries
INTER-RELAY COMMUNICATIONS 2-30
INTRODUCTION 1-3
INVERSE TIME UNDERVOLTAGE 5-240
IOC
see PHASE, GROUND, and NEUTRAL IOC entries
IP ADDRESS 1-7, 5-30
enter on front panel 1-19, 4-22
gateway 5-32
IP RATING 2-31
IP54 for enhanced front panel 3-1
IRIG-B
connection 3-33
CPU wiring 3-29
error messages 7-10
specifications 2-26

K

KEYPAD 1-19, 4-22

L

LAMPTEST 7-3
LANGUAGE 5-24
LASER MODULE 3-36
LATCHING OUTPUTS
application example 5-317, 5-318
error messages 7-11
settings 5-316
specifications 2-27
LED INDICATORS 4-14, 4-15, 4-16, 4-17, 5-77
LED TEST
FlexLogic operand 5-153
settings 5-75
specifications 2-23
LINK POWER BUDGET 2-30
LOCAL SETTING AUTHORIZATION 4-2
LOG OUT
Administrator manually from front panel 5-19
LOGIC GATES 5-155
LOGS, SYSTEM 5-22
LOSS OF EXCITATION
characteristics 5-252
FlexLogic operands 5-147
logic 5-253
Modbus registers B-42
settings 5-251, 5-252
specifications 2-22
LOST PASSWORD 5-8
LOW ON MEMORY MESSAGE 7-13

M

MAINTENANCE
battery 11-3
module replacement 3-7, 11-1
replace battery message 7-9
MAINTENANCE COMMANDS 7-3
MANUFACTURING DATE 6-33
MAXIMUM CT/VT WIRE SIZE 3-14
MEMORY MAP DATA FORMATS B-81
MEMORY VOLTAGE LOGIC 5-171
MENU HIERARCHY 1-19, 4-25
MENU NAVIGATION 1-19, 4-23
METERING
conventions 6-13, 6-14
current 2-24
frequency 2-25
power 2-24
voltage 2-24
Metering
THD specifications 2-25
METERING CONVENTIONS 6-14
MHO DISTANCE CHARACTERISTIC 5-172

MODBUS
data logger B-7, B-8
event recorder B-8
exception responses B-6
execute operation B-5
flex state parameters 5-86
function code 03/04h B-4
function code 05h B-5
function code 06h B-5
function code 10h B-6
introduction B-1
memory map data formats B-81
obtaining files B-7
oscillography B-7
read/write settings/actual values B-4
settings 5-35, 5-65
store multiple settings B-6
store single setting B-5
supported function codes B-4
user map 5-65, B-14, B-35
MODEL INFORMATION 6-33
MODIFICATION FILE NUMBER 6-33
MODULE FAILURE ERROR 7-8, 7-9
MODULES
communications 3-29, 3-30
CT 3-15
CT/VT 3-14, 5-6
direct inputs/outputs 3-36
insertion 3-7, 3-8, 11-1
order codes 2-14
power supply 3-13
transducer I/O 3-28
VT 3-15
withdrawal 3-7, 3-8, 11-1
MONITORING ELEMENTS 5-301
MOUNTING 3-1, 3-3

N

NAMEPLATE 1-2
NEGATIVE SEQUENCE DIRECTIONAL OC
Modbus registers B-45
NEGATIVE SEQUENCE DIRECTIONAL OVERCURRENT
characteristics 5-220
FlexLogic operands 5-147
logic 5-222
settings 5-218, 5-221
specifications 2-19
NEGATIVE SEQUENCE OVERVOLTAGE
FlexLogic operands 5-147
logic 5-244
Modbus registers B-40
settings 5-244
specifications 2-20
NEUTRAL DIRECTIONAL OC
Modbus registers B-45
NEUTRAL DIRECTIONAL OVERCURRENT
FlexLogic™ operands 5-148
logic 5-209
polarization 5-207
settings 5-205
specifications 2-19
NEUTRAL INSTANTANEOUS OVERCURRENT
see entry for NEUTRAL IOC
NEUTRAL IOC
FlexLogic™ operands 5-148
logic 5-204
settings 5-204
specifications 2-19
NEUTRAL OVERVOLTAGE
FlexLogic operands 5-148
logic 5-243
Modbus registers B-49
settings 5-243
specifications 2-20
NEUTRAL TIME OVERCURRENT
see entry for NEUTRAL TOC
NEUTRAL TOC
FlexLogic™ operands 5-148
logic 5-203
settings 5-203
specifications 2-18
NON-VOLATILE DATA STORAGE 3-14
NON-VOLATILE LATCHES
FlexLogic operands 5-147
Modbus registers B-57
settings 5-167
specifications 2-23

O

OBTAIN LIST OF PORT NUMBERS 5-30
ONE SHOTS 5-155
OPERATING TEMPERATURE 2-31
OPERATING TIMES 2-18
ORDER CODES 2-8, 2-9, 2-11, 2-12, 6-33, 7-3
ORDER CODES, UPDATING 7-3
ORDERING 2-8, 2-9, 2-11, 2-12
OSCILLATORY TRANSIENT TESTING 2-32
OSCILLOGRAPHY
actual values 6-31
clearing 5-25, 7-2
Modbus B-7
Modbus registers B-21, B-32
settings 5-71
specifications 2-24
via COMTRADE B-7
via EnerVista software 4-2
OST 2-22, 5-180
OUT OF SERVICE 2-3, 5-8
OUT-OF-STEP TRIPPING 2-22, 5-180
OUTPUTS
contact outputs 5-316
control power 2-27
critical failure relay 2-27
Fast Form-C relay 2-27
Form-A relay 2-27, 3-16, 3-17
Form-C relay 2-27, 3-16
latching outputs 2-27, 5-316
remote outputs 5-322, 5-323
virtual outputs 5-319
OVERCURRENT CURVE TYPES 5-191
OVERCURRENT CURVES
definite time 5-195
FlexCurves 5-195
I2T 5-195
IAC 5-194
IEC 5-193
IEEE 5-192

OVERFREQUENCY
FlexLogic operands 5-148
logic 5-287
settings 5-286
specifications 2-21
OVERFRQUENCY
Modbus registers B-40
OVERVOLTAGE
auxiliary 2-20, 5-246
negative sequence 5-244
negative-sequence 2-20
neutral 2-20, 5-243
phase 2-20, 5-242

P

PANEL CUTOUT 3-1, 3-3
PARALLEL REDUNDANCY PROTOCOL
actual values 6-12
explained 5-31
settings 5-30
specifications 2-30
PARITY 5-27
PASSWORD SECURITY
FlexLogic operands 5-153
PASSWORDS
change does not take relay out of service 2-3, 5-8
changing 4-28
for settings templates 4-5
lost password 5-8
Modbus registers B-19, B-29
overview 1-20
reset to factory defaults 5-8
security 2-3
settings 2-3
PC SOFTWARE
see entry for ENERVISTA UR SETUP
PERMISSIVE FUNCTIONS 5-240
PER-UNIT QUANTITY 5-4
PHASE ANGLE METERING 6-14
PHASE CURRENT METERING 6-17
PHASE DIRECTIONAL OVERCURRENT
FlexLogic operands 5-148
logic 5-202
phase A polarization 5-200
settings 5-199, 5-201
specifications 2-19
PHASE DISTANCE
FlexLogic operands 5-148
logic 5-177
op scheme 5-176
settings 5-171
specifications 2-18
PHASE INSTANTANEOUS OVERCURRENT
see entry for PHASE IOC
PHASE IOC
FlexLogic™ operands 5-148
logic 5-198
specifications 2-19
PHASE MEASUREMENT UNIT
see entry for SYNCHROPHASOR
PHASE OVERVOLTAGE
FlexLogic operands 5-148
logic 5-242
Modbus registers B-44
settings 5-242
specifications 2-20
PHASE ROTATION 5-101
PHASE TIME OVERCURRENT
see entry for PHASE TOC
PHASE TOC
FlexLogic™ operands 5-149
logic 5-197
settings 5-196
specifications 2-18
PHASE UNDERVOLTAGE
FlexLogic operands 5-149
logic 5-241
Modbus registers B-43
settings 5-241
specifications 2-20
PHASOR MEASUREMENT UNIT
actual values 6-32
PHONE NUMBER FOR SUPPORT 1-2
PMU
see entry for SYNCHROPHASOR
PORT NUMBER LIST 5-30
POWER METERING
specifications 2-24
values 6-19
POWER OFF, SAVE DATA FIRST 3-14
POWER SUPPLY
description 3-13
low range 2-26
removal to replace battery 11-3
RH/RL vs SH/SL 11-3
specifications 2-26
POWER SWING BLOCKING 2-22, 5-179
POWER SWING DETECT
FlexLogic operands 5-149
logic 5-185, 5-187
Modbus registers B-40
settings 5-178, 5-182
specifications 2-22
POWER SYSTEM
Modbus registers B-34
PREFERENCES
Modbus registers B-29
PROCES BUS MODULE
remote resources actual values 6-30
PROCESS BUS
overview 3-16
PRODUCT INFORMATION 6-33, B-9
PRODUCT SETUP 5-8, 5-18
PRODUCTION TESTS 2-32
PROTECTION ELEMENTS 5-4
PROTYPE FIRMWARE ERROR MESSAGE 7-12
PRP
actual values 6-12
explained 5-31
settings 5-30
specifications 2-30
PU QUANTITY 5-4
PUSHBUTTONS, USER-PROGRAMMABLE
see USER-PROGRAMMABLE PUSHBUTTONS

R

RADIUS server 5-17, G-1
REACTIVE POWER 2-24, 6-19
REAL POWER 2-24, 6-19
REAL TIME CLOCK
  Modbus registers B-31
  settings 5-65
REAR TERMINAL ASSIGNMENTS 3-9
RECLOSER CURVES 5-115, 5-196
RECYCLING 11-11
REDUNDANCY
  power supply 11-3
  PRP actual values 6-12
  PRP explained 5-31
  settings 5-30
  specifications 2-30
RELAY ACTIVATION 4-27
RELAY ARCHITECTURE 5-143
RELAY MAINTENANCE 7-3
RELAY NAME 5-97
RELAY NOT PROGRAMMED 1-20
REMOTE DEVICES
  actual values 6-6, 6-30
  device ID 5-320
  FlexLogic operands 5-153
  Modbus registers B-14, B-21
  settings 5-319
  statistics 6-6
REMOTE DPS INPUTS
  actual values 6-5
  settings 5-322
REMOTE INPUTS
  actual values 6-4
  FlexLogic operands 5-152
  Modbus registers B-14, B-21
  settings 5-321
  specifications 2-26
REMOTE OUTPUTS
  DNA-1 bit pair 5-322
  Modbus registers B-72, B-73
  UserSt-1 bit pair 5-323
REMOTE RTD INPUTS
  Modbus registers B-51
REMOTE RTD PROTECTION
  FlexLogic operands 5-149
REMOTE SETTING AUTHORIZATION 4-2
REPAIR 11-9, H-8
REPLACEMENT MODULES 2-14, 2-15
REQUIREMENTS FOR INSTALLATION 1-5
RESET TO FACTORY DEFAULTS 5-8
RESETTING 5-8, 5-153, 5-323
  to factory defaults 5-8
RESTRICTED GROUND FAULT
  actual values 6-26
  FlexLogic operands 5-149
  Modbus registers B-16, B-58
  settings 5-212
  specifications 2-18
REVISION HISTORY H-1
RF IMMUNITY 2-32
RFI, CONDUCTED 2-32
RH/RL POWER SUPPLY 11-3
RMS CURRENT 2-24
RMS VOLTAGE 2-24
RRTD COMM FAIL ERROR 7-12
RRTD INPUTS
  settings 5-334
RS232
  configuration 1-9
  specifications 2-29
  wiring 3-29
RS422
  configuration 3-41
  timing 3-43
  two-channel application 3-42
  with fiber interface 3-43
RS485
  description 3-32
  limitation with CyberSentry 5-16
  specifications 2-29
RTD INPUTS
  actual values 6-27
  Modbus registers B-23, B-36
  settings 5-332, 5-335
  specifications 2-26
RTD PROTECTION
  FlexLogic operands 5-150
  specifications 2-22
RTD Trouble message 7-17
RxGOOSE OFFLINE ERROR 7-11

S

SATURATION DETECTOR 8-6
SAVING SETTING DOES NOT TAKE RELAY OUT OF SERVICE 2-3, 5-8
SBO 5-54
SECURITY
  delete files and records 11-8
SECURITY AUDIT LIST OF PORT NUMBER 5-30
SELECT BEFORE OPERATE 5-54
SELECTOR SWITCH
  actual values 6-7
  application example 5-283
  FlexLogic operands 5-150
  logic 5-284
  Modbus registers B-56
  settings 5-279
  specifications 2-23
  timing 5-282, 5-283
Self-test errors 7-16
SELF-TESTS
  description 7-7
  error messages 7-8, 7-9
  FlexLogic operands 5-153
  Modbus registers B-9
SENSITIVE DIRECTIONAL POWER
  characteristic 5-256
  FlexLogic operands 5-146
  logic 5-258
  Modbus registers B-16, B-42
  settings 5-255, 5-257
  specifications 2-19
SERIAL NUMBER 6-33
SERVICE LIFE EXPECTED 1-21
SETTING GROUPS 5-150, 5-168, 5-276, B-40
  troubleshooting 5-169
SETTINGS
  change does not take relay out of service 2-3, 5-8
SETTINGS FILE 4-1
  takes relay out of service when loaded 4-2

SETTINGS SAVE ERROR MESSAGE 7-13
SETTINGS TEMPLATES
description 4-4
editing 4-4
enabling 4-4
Modbus registers B-80
password protection 4-5
removing 4-7
viewing 4-6
SETTINGS, CHANGING 4-26
SFP MODULE FAIL MESSAGE 7-13
SH/SL POWER SUPPLY 11-3
SIGNAL LOSS DETECTION FOR FIBER 5-31
SIGNAL SOURCES
description 5-5
metering 6-17
settings 5-102
SIGNAL TYPES 1-3
SINGLE LINE DIAGRAM 2-1, 2-2
SITE LIST, CREATING 4-1
SNTP PROTOCOL
accuracy 2-30
error messages 7-10
Modbus registers B-31
settings 5-69
SOFTWARE
installation 1-5
see entry for ENERVISTA UR SETUP
SOFTWARE ARCHITECTURE 1-4
SOFTWARE, PC
see entry for EnerVista UR Setup
SOURCE FREQUENCY 6-20
SOURCE TRANSFER SCHEMES 5-240
SOURCES
description 5-5
example use of 5-103
metering 6-17
settings 5-102
SPECIFICATIONS 2-18
SPLIT PHASE PROTECTION
FlexLogic operands 5-150
logic 5-230
Modbus registers B-43
settings 5-226
specifications 2-19
STANDARD ABBREVIATIONS H-5
STATOR DIFFERENTIAL
actual values 6-16
characteristic 5-188
description 5-188
FlexLogic operands 5-151
logic 5-189
Modbus registers B-15, B-40
settings 5-188
specifications 2-18
STATOR GROUND
see also entry for 100% STATOR GROUND
actual values 6-24
Modbus registers B-15, B-16, B-43
settings 5-258
STATUS INDICATORS 4-14, 4-16
STORAGE 11-10
STORAGE MEDIA ALARM 7-12
SUB-HARMONIC STATOR GROUND FAULT
FlexLogic operands 5-150
settings 5-265
specifications 2-21
SUMMATOR
Modbus registers B-50
SUPPORT, TECHNICAL 1-2
SURGE IMMUNITY 2-32
SYMMETRICAL COMPONENTS METERING 6-14
SYNCHROCHECK
actual values 6-10, 6-21, 6-24
FlexLogic operands 5-151
logic 5-294
Modbus registers B-19, B-77
settings 5-291, 5-292
specifications 2-22
SYNCHROPHASORS
actual values 6-26, 6-27
commands 7-4, 7-5
FlexLogic operands 5-148, 5-149
phase measurement unit triggering 5-130
phasor measurement configuration 5-125, 5-127, 5-128, 5-138, 5-139, 5-140
phasor measurement unit 5-119, 5-124
phasor measurement unit calibration 5-129
phasor measurement unit recording 5-138
PMU Modbus registers B-77
test values 5-343
SYSLOG 5-22
SYSTEM EXCEPTION MESSAGE 7-12
SYSTEM FREQUENCY 5-101
SYSTEM LOGS 5-22
SYSTEM REQUIREMENTS 1-5
SYSTEM SETUP 5-99

T

TARGET MESSAGES 7-7
TARGET SETTING 5-5
TARGETS MENU 7-7
TCP PORT NUMBER 5-55
TDR Trouble message 7-17
TECHNICAL SUPPORT 1-2
TELEPROTECTION
actual values 6-5
clearing counters 7-2
FlexLogic operands 5-151
logic 5-328
Modbus registers B-56
overview 5-327
settings 5-96, 5-327, 5-328
specifications 2-26
TEMPERATURE
operating 2-31
TEMPERATURE MONITOR 5-153, 7-11
TERMINALS 3-9
TESTING
force contact inputs 5-344
force contact outputs 5-345
lamp test 7-3
self-test error messages 7-7
synchrophasors 5-343
THD METERING 6-20, 6-21
analog channel correspondence 5-73
THD metering specifications 2-25
THERMAL MODEL
Modbus registers B-47

THERMAL OVERLOAD PROTECTION
Modbus registers B-46
settings 5-310
specifications 2-22
THIRD HARMONIC NEUTRAL UNDERVOLTAGE
FlexLogic operands 5-145
logic 5-264
Modbus registers B-42
settings 5-263
specifications 2-20
TIME 7-2
TIME OVERCURRENT
see PHASE, NEUTRAL, and GROUND TOC entries
TIMERS 5-161
TOC
ground 5-211
neutral 5-203
phase 5-196
specifications 2-18
Torque for screws 3-10
TRACEABILITY
data 4-11, 4-12
overview 4-10
rules 4-12
TRACKING FREQUENCY 6-22, B-50
TRANSDUCER I/O
actual values 6-27
settings 5-331, 5-332, 5-334, 5-335
specifications 2-26
wiring 3-28
TRIP BUS
FlexLogic operands 5-152
Modbus registers B-52
settings 5-274
TRIP LEDs 5-77
TROUBLE INDICATOR 1-20, 7-7
TROUBLESHOOTING
breaker not working 5-296
setting not working 5-296
TROUBLESHOOTING ACCESS TO DEVICE 1-15

U

UL APPROVAL 2-33
UNABLE TO ACCESS DEVICE 1-15
UNABLE TO PUT RELAY IN FLASH MODE 4-2
UNAUTHORIZED ACCESS
commands 5-25
resetting 7-2
UNDERFREQUENCY
FlexLogic operands 5-152
logic 5-286
settings 5-285
specifications 2-21
UNDERVOLTAGE
auxiliary 2-20
phase 2-20, 5-241
third harmonic neutral 2-20, 5-263
UNDERVOLTAGE CHARACTERISTICS 5-240
UNINSTALL 11-8
Unit not Calibrated message 7-9
UNIT NOT PROGRAMMED 5-97, 7-8
UNPACKING THE RELAY 1-2
UNRETURNED MESSAGES ALARM 5-95
UPDATING ORDER CODE 7-3
URPC
see entry for ENERVISTA UR SETUP
USER-DEFINABLE DISPLAYS
example 5-88
invoking and scrolling 5-86
Modbus registers B-29, B-35
settings 5-86, 5-88
specifications 2-23
USER-PROGRAMMABLE FAULT REPORT
actual values 6-31
clearing 5-25, 7-2
Modbus registers B-21
settings 5-70
USER-PROGRAMMABLE LEDs
defaults 4-17
description 4-15, 4-16
Modbus registers B-32
settings 5-77
specifications 2-23
USER-PROGRAMMABLE PUSHBUTTONS
FlexLogic operands 5-154
Modbus registers B-35, B-47
settings 5-81
specifications 2-23
USER-PROGRAMMABLE SELF TESTS
Modbus registers B-33
settings 5-78
USERST-1 BIT PAIR 5-323

V

VAR-HOURS 2-25, 6-20
VIBRATION TESTING 2-32
VIRTUAL INPUTS
actual values 6-4
commands 7-1
FlexLogic operands 5-152
logic 5-315
Modbus registers B-9, B-65
settings 5-315
VIRTUAL OUTPUTS
actual values 6-6
FlexLogic operands 5-152
Modbus registers B-67
settings 5-319
VOLTAGE BANKS 5-100
VOLTAGE DEVIATIONS 2-32
VOLTAGE ELEMENTS 5-240
FlexElement is phase to ground 5-165
VOLTAGE HARMONICS 6-21
VOLTAGE METERING
specifications 2-24
values 6-18
VOLTAGE MONITOR ERROR 7-13
VOLTAGE RESTRAINT CHARACTERISTIC 5-196
VOLTS PER HERTZ
actual values 6-25, 6-26
curves 5-248
FlexLogic operands 5-152
logic 5-248
Modbus registers B-57
settings 5-247
specifications 2-20
VT FUSE FAILURE
logic 5-309
settings 5-308

VT INPUTS 3-15, 5-6, 5-100
VT WIRING 3-15
VTFF
FlexLogic operands 5-150
see VT FUSE FAILURE

W

WARNINGS 1-1
WARRANTY H-8
WATT-HOURS 2-24, 6-20
WEB SERVER PROTOCOL 5-55
WEBSITE 1-2
WIRE SIZE
CT/VT 3-14
G.703 and fiber interface 3-44
G.703 interface 3-38
RS422 and fiber interface 3-43
RS422 interface 3-41
WITHDRAWAL FROM OPERATION 11-8
WRONG TRANSCEIVER MESSAGE 7-13

Z

ZERO SEQUENCE CORE BALANCE 3-15

INDEX