GE VERNOVA

L90

Line Current Differential System

Instruction Manual

Product version: 7.6x

Publication reference: 1601-0081-AF3

E83849

LISTED
IND.CONT. EQ.
52TL

Copyright © 2025 GE Vernova. All rights reserved.

GridBeats, Universal Relay, Multilin, MiCOM, S1 Agile, P40 Agile, DS Agile, EnerVista, CyberSentry, HardFiber, FlexLogic, FlexElement, FlexCurve, FlexAnalog, FlexInteger and FlexState are trademarks or registered trademarks of GE Vernova.

The contents of this manual are the property of GE Vernova. This documentation is furnished on license and may not be reproduced in whole or in part without the permission of GE Vernova. The content of this manual is for informational use only and is subject to change without notice.

It is the responsibility of the user for verifying and validating the suitability of all GE Vernova products. This equipment must be used within its design limits. The proper application including configuration and setting of this product to suit the power system assets is the responsibility of the user, who is also required to ensure that all local or regional safety guidelines are adhered to. Incorrect application of this product could risk damage to property/the environment, personal injuries or fatalities and shall be the sole responsibility of the person/entity applying and qualifying the product for use.

The content in this document has been developed to provide guidance to properly install, configure and maintain this product for its intended applications. This guidance is not intended to cover every possible contingency that may arise during commissioning, operation, service, or maintenance activities. Should you encounter any circumstance's not clearly addressed in this document, contact your local GE Vernova service site.

IT IS THE SOLE RESPONSIBILITY OF THE USER TO SECURE THEIR NETWORK AND ASSOCIATED DEVICES AGAINST CYBER SECURITY INTRUSIONS OR ATTACKS. GE VERNOVA AND ITS AFFILIATES ARE NOT LIABLE FOR ANY DAMAGES AND/OR LOSSES ARISING FROM OR RELATED TO SUCH SECURITY INTRUSION OR ATTACKS.

L90 Line Current Differential System

Table of contents

1 INTRODUCTION

1.1 Safety symbols and definitions 1-1
1.1.1 General cautions and warnings 1-1
1.2 For further assistance 1-2

2 PRODUCT DESCRIPTION

2.1 Product description 2-1
2.1.1 Features 2-3
2.2 Pilot channel relaying 2-5
2.2.1 Inter-relay communications 2-5
2.2.2 Channel monitor 2-7
2.2.3 Loopback test 2-7
2.2.4 Direct transfer tripping 2-8
2.3 Security 2-8
2.4 Order codes 2-12
2.4.1 Order codes with enhanced CT/VT modules 2-12
2.4.2 Order codes with process bus modules 2-20
2.4.3 Replacement modules 2-26
2.5 Signal processing 2-28
2.5.1 UR signal processing 2-28
2.6 Specifications 2-30
2.6.1 Protection elements 2-31
2.6.2 User-programmable elements 2-40
2.6.3 Monitoring 2-42
2.6.4 Metering 2-43
2.6.5 Inputs 2-44
2.6.6 Power supply 2-45
2.6.7 Outputs 2-46
2.6.8 Communication protocols 2-48
2.6.9 Inter-relay communications 2-49
2.6.10 CyberSentry security 2-50
2.6.11 Graphical front panel 2-50
2.6.12 Environmental 2-51
2.6.13 Type tests 2-52
2.6.14 Production tests 2-52
2.6.15 Approvals 2-53
2.6.16 Maintenance 2-53

3 INSTALLATION

3.1 Unpack and inspect ... 3-1
3.2 Panel cutouts ... 3-2
3.2.1 Horizontal units ... 3-2
3.2.2 Vertical units ... 3-6
3.2.3 Rear terminal layout ... 3-11
3.3 Wiring ... 3-14
3.3.1 Typical wiring ... 3-14
3.3.2 Dielectric strength ... 3-15
3.3.3 Control power ... 3-15
3.3.4 CT/VT modules ... 3-16
3.3.5 Process bus modules ... 3-18
3.3.6 Contact inputs and outputs ... 3-18
3.3.7 Transducer inputs and outputs ... 3-30
3.3.8 RS232 port ... 3-32
3.3.9 CPU communication ports ... 3-33
3.3.10 IRIG-B ... 3-36
3.4 Pilot channel communications ... 3-37
3.4.1 Fiber: LED and ELED transmitters ... 3-38
3.4.2 Fiber laser transmitters ... 3-38
3.4.3 G.703 interface ... 3-39
3.4.4 RS422 interface ... 3-43
3.4.5 Two-channel two-clock RS422 interface ... 3-45
3.4.6 RS422 and fiber interface ... 3-46
3.4.7 G.703 and fiber interface ... 3-46
3.4.8 IEEE C37.94 interface ... 3-47
3.4.9 C37.94SM interface ... 3-50
3.5 Activate relay ... 3-53
3.6 Install software ... 3-54
3.6.1 EnerVista communication overview ... 3-54
3.6.2 System requirements ... 3-55
3.6.3 Install software ... 3-55
3.7 Add device to software ... 3-56
3.7.1 Set IP address in UR ... 3-57
3.7.2 Configure serial connection ... 3-63
3.7.3 Configure Ethernet connection ... 3-64
3.7.4 Configure modem connection ... 3-65
3.7.5 Automatic discovery of UR devices ... 3-66
3.8 Connect to the L90 ... 3-67
3.8.1 Connect to the L90 in EnerVista ... 3-67
3.8.2 Use Quick Connect via front RS232 port ... 3-68
3.8.3 Use Quick Connect via front USB port ... 3-69
3.8.4 Use Quick Connect via a rear Ethernet port ... 3-69
3.9 Set up CyberSentry and change default password ... 3-70
3.10 Import settings ... 3-71
3.11 Connect to D400 gateway ... 3-72
3.11.1 Oscillography files ... 3-72
3.11.2 Event records ... 3-72
3.11.3 Log files ... 3-72
3.11.4 Setting files ... 3-73

4 INTERFACES

4.1 EnerVista software interface ... 4-1
4.1.1 Introduction ... 4-1
4.1.2 Settings files ... 4-1
4.1.3 Event viewing ... 4-2

4.1.4 File support ... 4-3
4.1.5 EnerVista main window ... 4-3
4.1.6 Protection summary window ... 4-4
4.1.7 Settings templates ... 4-5
4.1.8 Secure and lock FlexLogic equations ... 4-9
4.1.9 Settings file traceability ... 4-12
4.2 Front panel interface ... 4-15
4.2.1 Front panel ... 4-15
4.2.2 Front panel display ... 4-17
4.2.3 Front panel navigation keys ... 4-37
4.2.4 LED indicators ... 4-39
4.2.5 Front panel labelling ... 4-43
4.2.6 Menu navigation ... 4-50
4.2.7 Change settings ... 4-52
4.2.8 View actual values ... 4-57
4.2.9 Breaker control ... 4-58
4.2.10 Change passwords ... 4-59
4.2.11 Invalid password entry ... 4-61
4.3 Logic diagrams ... 4-61
4.4 FlexLogic design using Engineer ... 4-62
4.4.1 Design logic ... 4-64
4.4.2 Send file to and from device ... 4-74
4.4.3 Monitor logic ... 4-75
4.4.4 View front panel and print labels ... 4-76
4.4.5 Generate connectivity report ... 4-77
4.4.6 Preferences ... 4-77
4.4.7 Toolbars ... 4-81

5 SETTINGS
5.1 Settings menu ... 5-1
5.2 Overview ... 5-4
5.2.1 Introduction to elements ... 5-4
5.2.2 Introduction to AC sources ... 5-6
5.3 Product setup ... 5-8
5.3.1 Security ... 5-8
5.3.2 Display properties ... 5-27
5.3.3 Graphical front panel ... 5-29
5.3.4 Clear relay records ... 5-42
5.3.5 Communications ... 5-43
5.3.6 Modbus user map ... 5-110
5.3.7 Real-time clock ... 5-110
5.3.8 Fault reports ... 5-115
5.3.9 Oscillography ... 5-118
5.3.10 Data logger ... 5-120
5.3.11 Demand ... 5-122
5.3.12 User-programmable LEDs ... 5-123
5.3.13 User-programmable self-tests ... 5-127
5.3.14 Control pushbuttons ... 5-128
5.3.15 User-programmable pushbuttons ... 5-129
5.3.16 Flex state parameters ... 5-135
5.3.17 User-definable displays ... 5-136
5.3.18 Installation ... 5-137
5.4 Remote resources ... 5-138
5.4.1 Remote resources configuration ... 5-138
5.5 System setup ... 5-139
5.5.1 AC inputs ... 5-139

5.5.2 Power system 5-140
5.5.3 Signal sources 5-141
5.5.4 87L power system 5-144
5.5.5 Breakers 5-151
5.5.6 Disconnect switch control 5-156
5.5.7 FlexCurves 5-161
5.5.8 Phasor Measurement Unit 5-168
5.6 FlexLogic 5-189
5.6.1 FlexLogic operands 5-189
5.6.2 FlexLogic rules 5-205
5.6.3 FlexLogic evaluation 5-205
5.6.4 FlexLogic example 5-206
5.6.5 FlexLogic equation editor 5-211
5.6.6 FlexLogic timers 5-211
5.6.7 FlexElements 5-211
5.6.8 Non-volatile latches 5-215
5.7 Grouped elements 5-217
5.7.1 Overview 5-217
5.7.2 Setting group 1 5-217
5.7.3 Line differential elements 5-218
5.7.4 Line pickup 5-223
5.7.5 Distance 5-225
5.7.6 Power swing detect (ANSI 68) 5-246
5.7.7 Load encroachment 5-255
5.7.8 Phase current 5-256
5.7.9 Neutral current 5-268
5.7.10 Wattmetric ground fault 5-276
5.7.11 Ground current 5-280
5.7.12 Negative sequence current 5-290
5.7.13 Breaker failure (ANSI 50BF) 5-296
5.7.14 Voltage elements 5-305
5.7.15 Supervising elements 5-317
5.7.16 Sensitive directional power 5-324
5.8 Control elements 5-327
5.8.1 Overview 5-327
5.8.2 Trip bus 5-327
5.8.3 Setting groups 5-329
5.8.4 Selector switch 5-331
5.8.5 Trip output 5-337
5.8.6 Underfrequency (ANSI 81U) 5-343
5.8.7 Overfrequency (ANSI 81O) 5-344
5.8.8 Synchrocheck (ANSI 25) 5-345
5.8.9 Digital elements 5-350
5.8.10 Digital counters 5-353
5.8.11 Monitoring elements 5-355
5.8.12 Pilot schemes 5-379
5.8.13 Autoreclose (ANSI 79) 5-402
5.8.14 Frequency rate of change (ANSI 81R) 5-415
5.9 Inputs/outputs 5-416
5.9.1 Contact inputs 5-416
5.9.2 Virtual inputs 5-418
5.9.3 Contact outputs 5-419
5.9.4 Virtual outputs 5-423
5.9.5 Direct inputs and outputs 5-423
5.9.6 Resetting 5-424
5.10 Transducer inputs/outputs 5-425

5.10.1 DCmA inputs 5-425
5.10.2 RTD inputs 5-426
5.10.3 DCmA outputs 5-428
5.11 Testing 5-431
5.11.1 Test mode function 5-431
5.11.2 Test mode forcing 5-432
5.11.3 Phasor Measurement Unit test values 5-432
5.11.4 Force contact inputs 5-433
5.11.5 Force contact outputs 5-434
5.11.6 Channel tests 5-435

6 ACTUAL VALUES

6.1 Actual Values menu 6-1
6.2 Front panel 6-3
6.2.1 Enhanced and standard front panels 6-3
6.2.2 Graphical front panel 6-4
6.3 Status 6-5
6.3.1 Contact inputs 6-5
6.3.2 Virtual inputs 6-5
6.3.3 RxGOOSE boolean inputs 6-5
6.3.4 RxGOOSE DPS inputs 6-5
6.3.5 Direct inputs 6-6
6.3.6 Contact outputs 6-6
6.3.7 Virtual outputs 6-6
6.3.8 RxGOOSE status 6-7
6.3.9 RxGOOSE statistics 6-7
6.3.10 Autoreclose 6-7
6.3.11 Channel tests 6-8
6.3.12 Digital counters 6-9
6.3.13 Selector switches 6-9
6.3.14 Flex states 6-9
6.3.15 Ethernet 6-10
6.3.16 Real time clock synchronizing 6-10
6.3.17 Remaining connection status 6-11
6.3.18 Parallel Redundancy Protocol (PRP) 6-11
6.3.19 TxGOOSE status 6-12
6.4 Metering 6-12
6.4.1 Metering conventions 6-12
6.4.2 Differential current 6-16
6.4.3 Sources 6-17
6.4.4 Sensitive directional power 6-23
6.4.5 Synchrocheck 6-23
6.4.6 Tracking frequency 6-24
6.4.7 Frequency rate of change 6-24
6.4.8 FlexElements 6-24
6.4.9 RxGOOSE analogs 6-25
6.4.10 Wattmetric ground fault 6-25
6.4.11 Phasor Measurement Unit 6-25
6.4.12 PMU aggregator 6-26
6.4.13 Volts per hertz 6-26
6.4.14 Restricted ground fault 6-27
6.4.15 Transducer inputs and outputs 6-27
6.4.16 Distance 6-27
6.5 Remote resources 6-29
6.5.1 Field unit 6-29
6.6 Records 6-29

6.6.1 Fault reports 6-29
6.6.2 Event records 6-31
6.6.3 Oscillography 6-33
6.6.4 Data logger 6-33
6.6.5 Phasor Measurement Unit records 6-33
6.6.6 Breaker maintenance 6-34
6.7 Product information 6-35
6.7.1 Model information 6-35
6.7.2 Firmware revisions 6-35

7 COMMANDS AND TARGETS
7.1 Commands menu 7-1
7.1.1 Virtual inputs 7-2
7.1.2 Clear records 7-2
7.1.3 Set date and time 7-3
7.1.4 Relay maintenance 7-3
7.1.5 Phasor Measurement Unit one-shot 7-4
7.1.6 Security 7-6
7.2 Targets menu 7-6
7.2.1 Target messages 7-7
7.2.2 Relay self-tests 7-7

8 APPLICATION OF SETTINGS
8.1 CT requirements 8-1
8.1.1 Introduction 8-1
8.1.2 CT saturation analysis tool 8-2
8.2 Current differential (87L) settings 8-3
8.2.1 Introduction 8-3
8.2.2 Current differential pickup 8-4
8.2.3 Current differential restraint 1 8-4
8.2.4 Current differential restraint 2 8-4
8.2.5 Current differential break point 8-4
8.2.6 CT tap 8-4
8.2.7 Breaker-and-a-half 8-6
8.2.8 Distributed bus protection 8-10
8.3 Channel asymmetry compensation using GPS 8-10
8.3.1 Introduction 8-10
8.3.2 Compensation method 1 8-11
8.3.3 Compensation method 2 8-12
8.3.4 Compensation method 3 8-12
8.4 Distance backup/supervision 8-13
8.4.1 Overview 8-13
8.4.2 Phase distance 8-14
8.4.3 Ground distance 8-16
8.5 Protection signaling schemes 8-17
8.5.1 Overview 8-17
8.5.2 Direct under-reaching transfer trip (DUTT) 8-17
8.5.3 Permissive under-reaching transfer trip (PUTT) 8-17
8.5.4 Permissive over-reaching transfer trip (POTT) 8-18
8.5.5 Hybrid POTT scheme (HYB-POTT) 8-19
8.5.6 Directional comparison blocking 8-19
8.5.7 Directional comparison unblocking 8-20
8.6 Series compensated lines 8-22
8.6.1 Distance settings 8-22
8.6.2 Ground directional overcurrent 8-23
8.7 Lines with tapped transformers 8-24

8.7.1 Overview ... 8-24
8.7.2 Transformer load currents ... 8-24
8.7.3 LV-side faults ... 8-25
8.7.4 External ground faults ... 8-25
8.8 Instantaneous elements ... 8-25
8.8.1 Instantaneous element error during L90 synchronization ... 8-25
8.9 Phase distance through power transformers ... 8-28
8.9.1 Phase distance protection ... 8-28
8.9.2 Example ... 8-29

9 COMMISSIONING
9.1 Testing ... 9-1
9.1.1 Channel testing ... 9-1
9.1.2 Clock synchronization tests ... 9-2
9.1.3 Current differential ... 9-3
9.1.4 Local-remote relay tests ... 9-4

10 THEORY OF OPERATION
10.1 Overview ... 10-1
10.1.1 L90 design ... 10-1
10.1.2 L90 architecture ... 10-2
10.1.3 Removal of decaying offset ... 10-2
10.1.4 Phaselet computation ... 10-2
10.1.5 Disturbance detection ... 10-3
10.1.6 Fault detection ... 10-3
10.1.7 Ground differential element ... 10-5
10.1.8 Clock synchronization ... 10-6
10.1.9 Frequency tracking and phase locking ... 10-6
10.1.10 Frequency detection ... 10-7
10.1.11 Phase detection ... 10-8
10.1.12 Phase locking filter ... 10-10
10.1.13 Matching phaselets ... 10-11
10.1.14 Start-up ... 10-12
10.1.15 Hardware and communication requirements ... 10-12
10.1.16 Online estimate of measurement errors ... 10-12
10.1.17 CT saturation detection ... 10-13
10.1.18 Charging current compensation ... 10-14
10.1.19 Differential element characteristics ... 10-15
10.1.20 Relay synchronization ... 10-16
10.2 Operating condition characteristics ... 10-18
10.2.1 Description ... 10-18
10.2.2 Trip decision example ... 10-20
10.2.3 Trip decision test ... 10-20
10.3 Distance elements ... 10-21
10.3.1 Introduction ... 10-21
10.3.2 Phasor estimation ... 10-22
10.3.3 Distance characteristics ... 10-22
10.3.4 Fast distance algorithm ... 10-27
10.3.5 Memory polarization ... 10-28
10.3.6 Distance elements analysis ... 10-29
10.4 Phase distance applied to power transformers ... 10-32
10.4.1 Description ... 10-32
10.4.2 Example ... 10-36
10.5 Single-pole tripping ... 10-38
10.5.1 Overview ... 10-38
10.5.2 Phase selection ... 10-41

10.5.3 Communications channels for pilot-aided schemes 10-43
10.5.4 Permissive echo signaling 10-49
10.5.5 Pilot scheme / phase selector coordination 10-50
10.5.6 Cross-country fault example 10-51
10.6 Fault locator 10-52
10.6.1 Overview 10-52
10.6.2 Multi-ended fault locator 10-52
10.6.3 Single-ended fault locator 10-59

11 MAINTENANCE
11.1 Monitoring 11-1
11.1.1 Devices with Site Targets 11-1
11.1.2 Data with Modbus Analyzer 11-1
11.2 General maintenance 11-3
11.2.1 In-service maintenance 11-3
11.2.2 Out-of-service maintenance 11-3
11.2.3 Unscheduled maintenance (system interruption) 11-3
11.3 Retrieve files 11-3
11.3.1 CyberSentry security event files 11-4
11.4 Convert device settings 11-5
11.5 Copy settings to other device 11-7
11.6 Compare settings 11-7
11.6.1 Compare against defaults 11-7
11.6.2 Compare two devices 11-8
11.7 Back up and restore settings 11-8
11.7.1 Back up settings 11-8
11.7.2 Restore settings 11-11
11.8 Upgrade software 11-13
11.9 Upgrade firmware 11-14
11.10 Replace module 11-15
11.11 Battery 11-17
11.11.1 Replace battery 11-17
11.11.2 Dispose of battery 11-18
11.12 Clear files and data after uninstall 11-21
11.13 Repairs 11-22
11.14 Storage 11-22
11.15 Disposal 11-23

A FLEXANALOG OPERANDS
A.1 FlexAnalog items A-1

B RADIUS SERVER CONFIGURATION
B.1 RADIUS server configuration B-1

C COMMAND LINE INTERFACE
C.1 Command line interface C-1

D MISCELLANEOUS
D.1 Warranty D-1
D.2 Revision history D-1

ABBREVIATIONS

INDEX

L90 Line Current Differential System

Chapter 1: Introduction

This chapter outlines safety and technical support information.

1.1 Safety symbols and definitions

Before attempting to install or use the device, review all safety indicators in this document to help prevent injury, equipment damage, or downtime.

The following safety and equipment symbols are used in this document.

DANGER **Indicates a hazardous situation which, if not avoided, will result in death or serious injury.**

WARNING **Indicates a hazardous situation which, if not avoided, could result in death or serious injury.**

CAUTION **Indicates a hazardous situation which, if not avoided, could result in minor or moderate injury.**

NOTICE Indicates practices not related to personal injury.

1.1.1 General cautions and warnings

The following general safety precautions and warnings apply.

DANGER **Ensure that all connections to the product are correct so as to avoid accidental risk of shock and/or fire, for example such as can arise from high voltage connected to low voltage terminals.**

Follow the requirements of this manual, including adequate wiring size and type, terminal torque settings, voltage, current magnitudes applied, and adequate isolation/clearance in external wiring from high to low voltage circuits.

Use the device only for its intended purpose and application.

Ensure that all ground paths are uncompromised for safety purposes during device operation and service.

Ensure that the control power applied to the device, the alternating current (AC), and voltage input match the ratings specified on the relay nameplate. Do not apply current or voltage in excess of the specified limits.

Only qualified personnel are to operate the device. Such personnel must be thoroughly familiar with all safety cautions and warnings in this manual and with applicable country, regional, utility, and plant safety regulations.

Hazardous voltages can exist in the power supply and at the device connection to current transformers, voltage transformers, control, and test circuit terminals. Make sure all sources of such voltages are isolated prior to attempting work on the device.

Hazardous voltages can exist when opening the secondary circuits of live current transformers. Make sure that current transformer secondary circuits are shorted out before making or removing any connection to the current transformer (CT) input terminals of the device.

For tests with secondary test equipment, ensure that no other sources of voltages or currents are connected to such equipment and that trip and close commands to the circuit breakers or other switching apparatus are isolated, unless this is required by the test procedure and is specified by appropriate utility/plant procedure.

When the device is used to control primary equipment, such as circuit breakers, isolators, and other switching apparatus, all control circuits from the device to the primary equipment must be isolated while personnel are working on or around this primary equipment to prevent any inadvertent command from this device.

Use an external disconnect to isolate the mains voltage supply.

Personal safety can be affected if the product is physically modified by the end user. Modifications to the product outside of recommended wiring configuration, hardware, or programming boundaries is not recommended end-use practice. Product disassembly and repairs are not permitted. All service needs to be conducted by the factory.

⚠CAUTION **LED transmitters are classified as IEC 60825-1 Accessible Emission Limit (AEL) Class 1M. Class 1M devices are considered safe to the unaided eye. Do not view directly with optical instruments.**

NOTICE This product is rated to Class A emissions levels and is to be used in Utility, Substation Industrial environments. Not to be used near electronic devices rated for Class B levels.

1.2 For further assistance

For product support, contact the information and call center as follows:

GE Grid Solutions
650 Markland Street
Markham, Ontario
Canada L6C 0M1
Worldwide telephone: +1 905 927 7070
Europe/Middle East/Africa telephone: +34 94 485 88 54
North America toll-free: 1 800 547 8629
Fax: +1 905 927 5098
Worldwide e-mail: multilin.tech@ge.com
Europe e-mail: multilin.tech.euro@ge.com
Website: http://www.gegridsolutions.com/multilin

When contacting GE by e-mail, optionally include a device information file, which is generated in the EnerVista software by clicking the **Service Report** button. The service report also can be generated in the field, for example with a USB cable connected between the graphical front panel and a computer, and the Device Setup configured for the USB connection.

Figure 1-1: Generate service report in EnerVista software

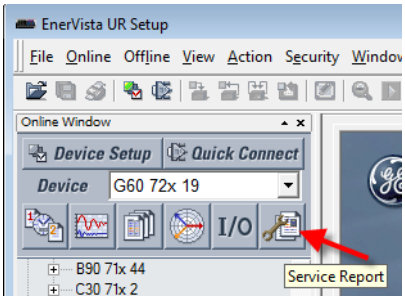

L90 Line Current Differential System

Chapter 2: Product description

This chapter outlines the product, order codes, and specifications.

2.1 Product description

The L90 Line Current Differential System is part of the Universal Relay (UR) series of products. It is a digital current differential relay system with an integral communications channel interface. It is a complete line terminal protection and control system, able to deliver protection as either a line differential and/or distance device. Both distance and line differential elements can run simultaneously.

The L90 provides complete protection for transmission lines of any voltage level. Both three phase and single phase tripping schemes are available. Models of the L90 are available for application on both two and three terminal lines. The L90 uses per-phase-differential at 64 kbps transmitting two phaselets per cycle. The current differential scheme is based on innovative patented techniques developed by GE. The L90 algorithms are based on the Fourier transform–phaselet approach and an adaptive statistical restraint. The restraint is similar to a traditional percentage differential scheme, but is adaptive based on relay measurements. When used with a 64 kbps channel, the innovative phaselets approach yields an operating time of 1.0 to 1.5 cycles (typical). The adaptive statistical restraint approach provides both sensitive and accurate fault sensing. This allows the L90 to detect relatively higher impedance single line to ground faults that existing systems do not. The basic current differential element operates on current input only. Long lines with significant capacitance can benefit from charging current compensation if terminal voltage measurements are applied to the relay. The voltage input is also used for some protection and monitoring features such as directional elements, fault locator, metering, and distance backup. In addition, the L90 provides local restricted ground fault protection.

The L90 operates over different communications links with various degrees of noise encountered in power systems and communications environments. Since correct operation of the relay is completely dependent on data received from the remote end, special attention must be paid to information validation. The L90 incorporates a high degree of security by using a 32-bit CRC cyclic redundancy code (CRC) inter-relay communications packet.

Several options are available for communication. An RS232 port (USB port with the graphical front panel) can be used to connect to a computer for the programming of settings and the monitoring of actual values. The rear RS485 port allows independent access by operating and engineering staff. It can be connected to system computers with baud rates up to 115.2 kbps. All serial ports use the Modbus RTU protocol. The IEC 60870-5-103 protocol is supported on the RS485 interface. Also only one of the DNP, IEC 60870-5-103, and IEC 60870-5-104 protocols can be enabled at any time on the relay. When the IEC 60870-5-103 protocol is chosen, the RS485 port has a fixed even parity and the baud rate can be either 9.6 kbps or 19.2 kbps. The 100Base-FX or 100Base-TX Ethernet interface provides fast, reliable communications in noisy environments. The Ethernet port supports IEC 61850, Modbus/TCP, TFTP, and PTP (according to IEEE Std. 1588-2008

or IEC 61588), and it allows access to the relay via any standard web browser (L90 web pages). The IEC 60870-5-104 protocol is supported on the Ethernet port. The Ethernet port also supports the Parallel Redundancy Protocol (PRP) of IEC 62439-3 (clause 4, 2012) when purchased as an option.

Secure Routable GOOSE (R-GOOSE) is supported with software options.

In addition to current differential protection, the relay provides multiple backup protection for phase and ground faults. For overcurrent protection, the time overcurrent curves can be selected from a selection of standard curve shapes or a custom FlexCurve™ for optimum co-ordination. Additionally, five zones of phase and ground distance protection with power swing blocking, out-of-step tripping, line pickup, load encroachment, and six pilot schemes are included.

The L90 incorporates charging current compensation for applications on very long transmission lines without loss of sensitivity. The line capacitive current is removed from the terminal phasors.

For breaker-and-a-half or ring applications, the L90 design provides secure operation during external faults with possible current transformation (CT) saturation.

Voltage, current, and power metering are built in as standard features. Current parameters are available as total waveform RMS magnitude, or as fundamental frequency only root mean square (RMS) magnitude and angle (phasor).

Settings and actual values can be accessed from the front panel or EnerVista software.

The L90 uses flash memory technology that allows field upgrading as new features are added. Firmware and software are upgradable.

The following single-line diagram illustrates the relay functionality using American National Standards Institute (ANSI) device numbers.

Table 2-1: ANSI device numbers and functions supported

Device number	Function
21G	Ground distance
21P	Phase distance
24	Volts per hertz
25	Synchrocheck
27P	Phase undervoltage
27X	Auxiliary undervoltage
32N	Wattmetric zero-sequence directional
32R	Sensitive reverse power
49	Thermal overload protection
50BF	Breaker failure
50DD	Adaptive fault detector (sensitive current disturbance detector)
50G	Ground instantaneous overcurrent
50N	Neutral instantaneous overcurrent
50P	Phase instantaneous overcurrent
50_2	Negative-sequence instantaneous overcurrent
51G	Ground time overcurrent
51N	Neutral time overcurrent
51P	Phase time overcurrent

Device number	Function
51_2	Negative-sequence time overcurrent
52	AC circuit breaker
59C	Compensated overvoltage
59N	Neutral overvoltage
59P	Phase overvoltage
59X	Auxiliary overvoltage
67N	Neutral directional overcurrent
67P	Phase directional overcurrent
67_2	Negative-sequence directional overcurrent
68	Power swing blocking
78	Out-of-step tripping
79	Automatic recloser
81O	Overfrequency
81R	Rate of change of frequency
81U	Underfrequency
87RGF	Restricted ground fault
87L	Segregated line current differential
87LG	Ground line current differential

Figure 2-1: Single-line diagram

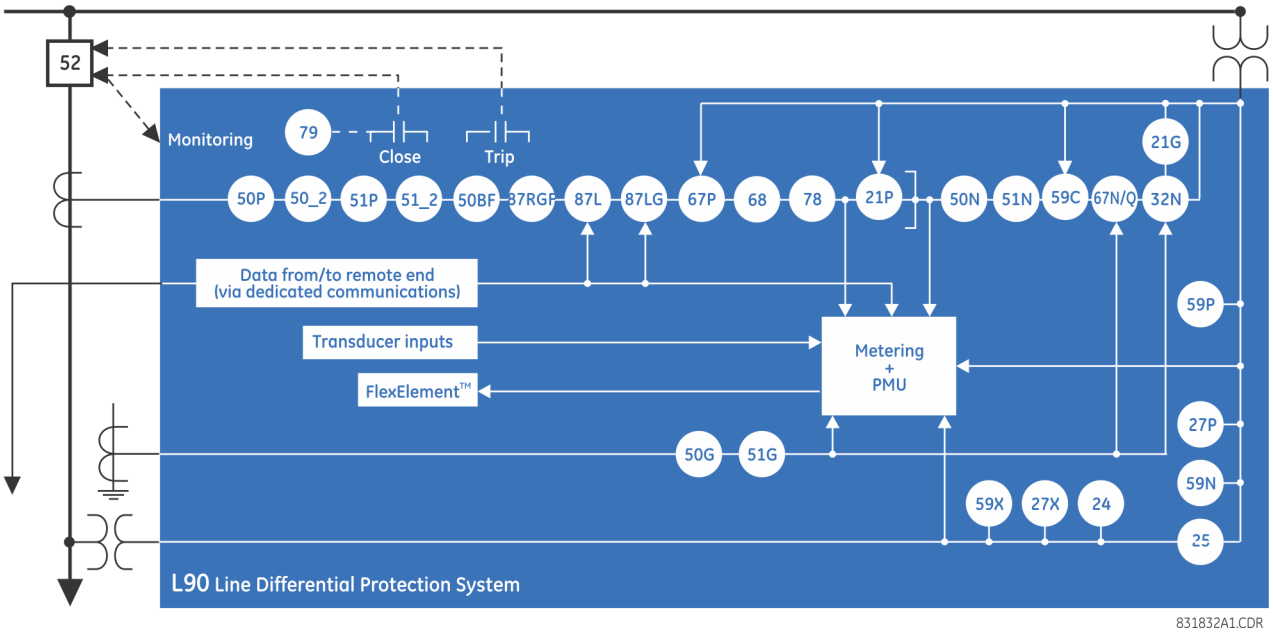

Table 2-2: Other device functions

Function	Function	Function
Breaker Arcing Current (I^2t)	Fault Locator	Oscillography
Breaker Control	Fault Reporting	Pilot Schemes
Breaker Flashover	FlexElements™ (8)	Setting Groups (6)
Broken Conductor Detection	FlexLogic™ Equations	Stub Bus
Contact Inputs (up to 120)	IEC 60870-5-103 Communications	Synchrophasor (PMU)
Contact Outputs (up to 72)	IEC 61850 Communications	Time synchronization over IRIG-B or IEEE 1588
Control Pushbuttons	IEC 62351-9 Data and Communications Security	Time Synchronization over SNTP
CT Failure Detector	L90 Channel Tests	Transducer Inputs/Outputs
CyberSentry™ Security	Line Pickup	User Definable Displays
Data Logger	Load Encroachment	User Programmable LEDs
Digital Counters (8)	Metering: Current, Voltage, Power, Energy, Frequency, Demand, Power Factor, 87L current, local and remote phasors, harmonics, THD	User Programmable Pushbuttons
Digital Elements (48)	Modbus Communications	User Programmable Self-Tests
Direct Inputs (8 per L90 comms channel)	Modbus User Map	Virtual Inputs (64)
Disconnect Switches	Non-Volatile Latches	Virtual Outputs (96)
DNP 3.0 or IEC 60870-5-104 protocol	Non-Volatile Selector Switch	VT Fuse Failure
Event Recorder	Open Pole Detector	

2.1.1 Features

2.1.1.1 Line current differential

- Phase segregated, high-speed digital current differential system
- Overhead and underground AC transmission lines, series compensated lines

- Two-terminal and three-terminal line applications
- Zero-sequence removal for application on lines with tapped transformers connected in a grounded wye on the line side
- GE phaselets approach based on the Discrete Fourier Transform with 64 samples per cycle and transmitting two time-stamped phaselets per cycle
- Adaptive restraint approach improving sensitivity and accuracy of fault sensing
- Increased security for trip decision using disturbance detector and trip output logic
- Accommodates in-zone transformer with a magnitude and phase compensation and second harmonic inhibit during transformer magnetizing inrush
- Continuous clock synchronization via the distributed synchronization technique
- Increased transient stability through DC decaying offset removal
- Accommodates up to five times CT ratio differences
- Peer-to-peer (master-master) architecture changing to master-slave via DTT (if channel fails) at 64 kbps
- Charging current compensation
- Interfaces direct fiber, multiplexed RS422, IEEE C37.94, and G.703 connections with relay ID check
- Per-phase line differential protection direct transfer trip plus eight user-assigned pilot signals via the communications channel
- Secure 32-bit CRC protection against communications errors
- Channel asymmetry (up to 10 ms) compensation using GPS satellite-controlled clock

2.1.1.2 Backup protection

- DTT provision for pilot schemes
- Five zones of distance protection with six pilot schemes, power swing blocking and out-of-step tripping, line pickup, and load encroachment
- Two-element time overcurrent and two-element instantaneous overcurrent directional phase overcurrent protection
- Two-element time overcurrent and two-element instantaneous overcurrent directional zero-sequence protection
- Two-element time overcurrent and two-element instantaneous overcurrent negative-sequence overcurrent protection
- Undervoltage and overvoltage protection

2.1.1.3 Additional protection

- Breaker failure protection
- Stub bus protection
- VT and CT supervision
- GE Multilin *sources* approach allowing grouping of different CTs and VTs from multiple input channels
- Open pole detection
- Breaker trip coil supervision and seal-in of trip command
- FlexLogic allowing creation of user-defined distributed protection and control logic

2.1.1.4 Control

- One and two breaker configuration for breaker-and-a-half and ring bus schemes, pushbutton control from the relay
- Auto-reclosing and synchrochecking
- Breaker arcing current

2.1.1.5 Monitoring

- Oscillography of current, voltage, FlexLogic operands, and digital signals (1 × 128 cycles to 31 × 8 cycles configurable)
- Events recorder: 1024 events

- Fault locator

2.1.1.6 Metering

- Actual 87L remote phasors, differential current, channel delay, and channel asymmetry at all line terminals of line current differential protection
- Line current, voltage, real power, reactive power, apparent power, power factor, and frequency

2.1.1.7 Communications

- Front panel RS232 port: 19.2 kbps
- Rear RS485 port: up to 115 kbps
- Rear 100Base-FX Ethernet port supporting the IEC 61850 protocol

2.2 Pilot channel relaying

2.2.1 Inter-relay communications

Dedicated inter-relay communications can operate over 64 kbps digital channels or dedicated fiber optic channels. Available interfaces include:

- RS422 at 64 kbps
- G.703 at 64 kbps
- Dedicated fiber optics at 64 kbps, including
  - 820 nm multimode fiber with an LED transmitter
  - 1300 nm multimode fiber with an LED transmitter
  - 1300 nm single-mode fiber with an ELED transmitter
  - 1300 nm single-mode fiber with a laser transmitter
  - 1550 nm single-mode fiber with a laser transmitter
  - IEEE C37.94 820 nm multimode fiber with an LED transmitter

All fiber optic options use an ST connector. L90 models are available for use on two or three terminal lines. A two terminal line application requires one bidirectional channel. However, in two terminal line applications, it is also possible to use an L90 relay with two bidirectional channels. The second bidirectional channel provides a redundant backup channel with automatic switchover if the first channel fails.

The L90 current differential relay is designed to function in a peer-to-peer or master-to-master architecture. In the peer-to-peer architecture, all relays in the system are identical and perform identical functions in the current differential scheme. In order for every relay on the line to be a peer, each relay must be able to communicate with all of the other relays. If there is a failure in communications among the relays, the relays revert to a master-to-slave architecture on a three-terminal system, with the master as the relay that has current phasors from all terminals. Using two different operational modes increases the dependability of the current differential scheme on a three-terminal system by reducing reliance on communications.

The main difference between a master and a slave L90 is that only a master relay performs the actual current differential calculation, and only a master relay communicates with the relays at all other terminals of the protected line.

At least one master L90 relay must have live communications to all other terminals in the current differential scheme; the other L90 relays on that line operate as slave relays. All master relays in the scheme are equal, and each performs all functions. Each L90 in the scheme determines if it is a master by comparing the number of terminals on the line to the number of active communication channels.

The slave terminals only communicate with the master; there is no slave-to-slave communications path. As a result, a slave L90 cannot calculate the differential current. When a master L90 relay issues a local trip signal, it also sends a direct transfer trip (DTT) signal to all of the other L90 relays on the protected line.

If a slave L90 issues a trip from one of its backup functions, it can send a transfer trip signal to its master and other slave relays if such option is designated. Because a slave cannot communicate with all the relays in the differential scheme, the master then "broadcasts" the direct transfer trip (DTT) signal to all other terminals.

The slave L90 performs the following functions:

- Samples currents and voltages
- Removes DC offset from the current via the mimic algorithm
- Creates phaselets
- Calculates sum of squares data
- Transmits current data to all master L90 relays
- Performs all local relaying functions
- Receives current differential DTT and Direct Input signals from all other L90 relays
- Transmits direct output signals to all communicating relays
- Sends synchronization information of local clock to all other L90 clocks

The master L90 relay performs the following functions:

- Performs all functions of a slave L90
- Receives current phasor information from all relays
- Performs the current differential algorithm
- Sends a current differential DTT signal to all L90 relays on the protected line

In the peer-to-peer mode, all L90 relays act as masters.

Figure 2-2: Communication paths

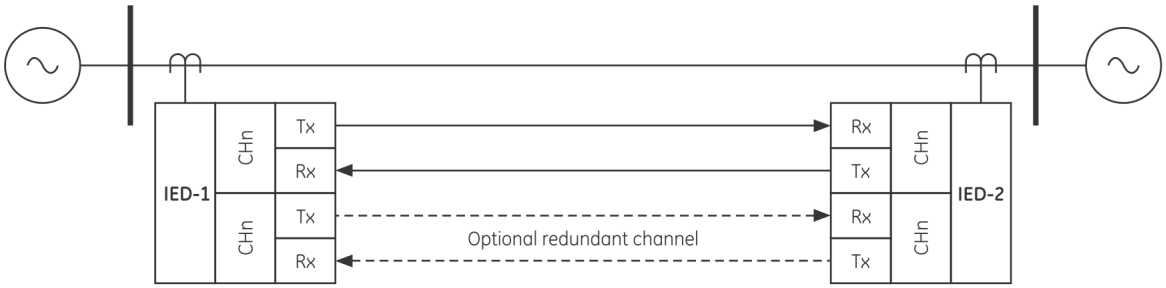

Typical two-terminal application

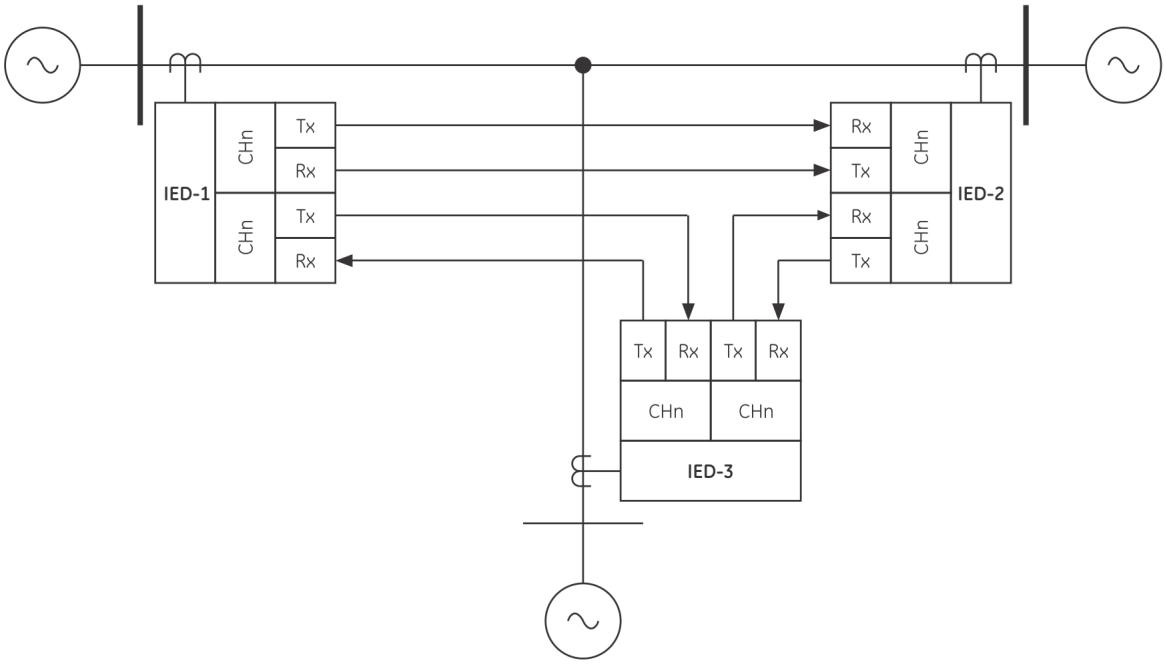

Typical three-terminal application

831009A5.CDR

2.2.2 Channel monitor

The L90 has logic to detect that the communications channel is deteriorating or has failed completely. This can provide an alarm indication and disable the current differential protection. Note that a failure of the communications from the master to a slave does not prevent the master from performing the current differential algorithm; failure of the communications from a slave to the master prevents the master from performing the correct current differential logic. Channel propagation delay is being continuously measured and adjusted according to changes in the communications path. Every relay on the protection system can be assigned a unique ID to prevent advertent loopbacks at multiplexed channels.

2.2.3 Loopback test

This option allows the user to test the relay at one terminal of the line by looping the transmitter output to the receiver input. At the same time, the signal sent to the remote does not change. A local loopback feature is included in the relay to simplify single ended testing.

2.2.4 Direct transfer tripping

The L90 includes provision for sending and receiving a single-pole direct transfer trip (DTT) signal from current differential protection among the L90 relays at the line terminals using the pilot communications channel. The user can also initiate an additional eight pilot signals with an L90 communications channel to create trip, block, or signaling logic. A FlexLogic operand, an external contact closure, or a signal over the LAN communication channels can be assigned for that logic.

2.3 Security

The following security features are available:

- Password security — Basic security present by default
- EnerVista security — Role-based access to various EnerVista software screens and configuration elements. The feature is present by default in the EnerVista software.
- CyberSentry security — Advanced security available using a software option. When purchased, the option is automatically enabled, and the default Password security and EnerVista security are disabled.

2.3.0.1 EnerVista security

The EnerVista security management system is a role-based access control (RBAC) system that allows an administrator to manage the privileges of multiple users. This allows for access control of UR devices by multiple personnel within a substation and conforms to the principles of RBAC as defined in ANSI INCITS 359-2004. The EnerVista security management system is disabled by default to allow the administrator direct access to the EnerVista software after installation. It is recommended that security be enabled before placing the device in service.

Basic password or enhanced CyberSentry security applies, depending on purchase.

2.3.0.2 Password security

Password security is a basic security feature present by default.

Two levels of password security are provided: command and setting. Use of a password for each level controls whether all users can enter commands and/or change settings.

Two types of connection security are provided: password entry from local or remote connection. Local access is defined as any access to settings or commands via the front panel interface. This includes both keypad entry and the through a front panel port. Remote access is defined as any access to settings or commands via any rear communications port. This includes both Ethernet and RS485 connections. These two settings are on by default and apply to all users.

When entering a settings or command password via EnerVista or any serial interface, the user must enter the corresponding connection password. If the connection is to the back of the L90, the remote password is used. If the connection is to a front panel port, the local password applies. (These two local and remote password settings are not shown in the figure.)

Password access events are logged in the Event Recorder.

Figure 2-3: Access control by passwords and connection type

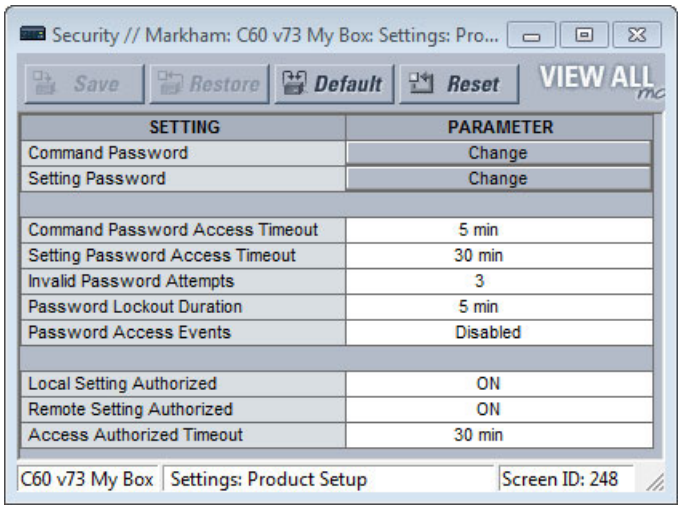

2.3.0.3 CyberSentry security

CyberSentry security is available using software options that provide advanced security services. When an option is purchased, the basic password security is disabled automatically.

CyberSentry provides security through the following features:

- An Authentication, Authorization, Accounting (AAA) Remote Authentication Dial-In User Service (RADIUS) client that is centrally managed, enables user attribution, provides accounting of all user activities, and uses secure standards-based strong cryptography for authentication and credential protection
- A Role-Based Access Control (RBAC) system that provides a permission model that allows access to UR device operations and configurations based on specific roles and individual user accounts configured on the AAA server (that is, Administrator, Supervisor, Engineer, Operator, Observer roles)
- Security event reporting through the Syslog protocol for supporting Security Information Event Management (SIEM) systems for centralized cybersecurity monitoring
- Strong encryption of all access and configuration network messages between the EnerVista software and UR devices using the Secure Shell (SSH) protocol, the Advanced Encryption Standard (AES), and 128-bit keys in Galois Counter Mode (GCM) as specified in the U.S. National Security Agency Suite B extension for SSH and approved by the National Institute of Standards and Technology (NIST) FIPS-140-2 standards for cryptographic systems

CyberSentry user roles

CyberSentry user roles (Administrator, Engineer, Operator, Supervisor, Observer) limit the levels of access to various UR functions. This means that the EnerVista software allows for access to functionality based on the user's logged in role.

Example: Administrative functions can be segmented from common operator functions, or engineering type access, all of which are defined by separate roles so that access of UR devices by multiple personnel within a substation is allowed.

One role of one type is allowed to be logged in at a time. For example, one Operator can be logged in but not a second Operator at the same time. This prevents subsets of settings from being changed at the same time.

2

Figure 2-4: CyberSentry user roles

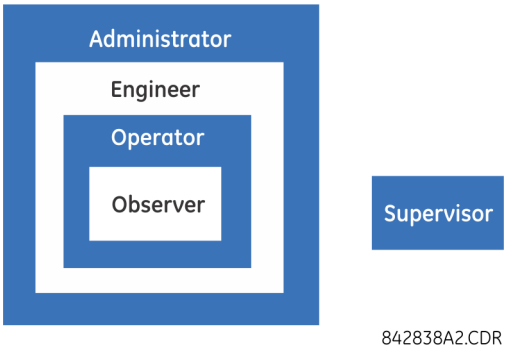

The table lists user roles and their corresponding capabilities.

Table 2-3: Permissions by user role for CyberSentry

	Administrator	Engineer	Operator	Supervisor	Observer
Summary	Complete access	Complete access except for CyberSentry Security	Command menu	Authorizes writing	Default role
Device Definition	R	R	R	R	R
Settings					
|---------- Product Setup					
|---------- Security (CyberSentry)	RW	R	R	R	R
|---------- Supervisory	See table notes	R	R	See table notes	R
|---------- Display Properties	RW	RW	R	R	R
|---------- Clear Relay Records (settings)	RW	RW	R	R	R
|---------- Communications	RW	RW	R	R	R
|---------- Modbus User Map	RW	RW	R	R	R
|---------- Real Time Clock	RW	RW	R	R	R
|---------- Oscillography	RW	RW	R	R	R
|---------- Data Logger	RW	RW	R	R	R
|---------- Demand	RW	RW	R	R	R
|---------- User-Programmable LEDs	RW	RW	R	R	R
|---------- User-Programmable Self Tests	RW	RW	R	R	R
|---------- Control Pushbuttons	RW	RW	R	R	R
|---------- User-Programmable Pushbuttons	RW	RW	R	R	R
|---------- Flex state Parameters	RW	RW	R	R	R
|---------- User-Definable Displays	RW	RW	R	R	R
|---------- Direct I/O	RW	RW	R	R	R
|---------- Teleprotection	RW	RW	R	R	R
|---------- Installation	RW	RW	R	R	R
|---------- System Setup	RW	RW	R	R	R

	Administrator	Engineer	Operator	Supervisor	Observer
|---------- FlexLogic	RW	RW	R	R	R
|---------- Grouped Elements	RW	RW	R	R	R
|---------- Control Elements	RW	RW	R	R	R
|---------- Inputs / Outputs	RW	RW	R	R	R
|---------- Contact Inputs	RW	RW	R	R	R
|---------- Contact Input threshold	RW	RW	R	R	R
|---------- Virtual Inputs	RW	RW	R	R	R
|---------- Contact Outputs	RW	RW	R	R	R
|---------- Virtual Outputs	RW	RW	R	R	R
|---------- Resetting	RW	RW	R	R	R
|---------- Direct Inputs	RW	RW	R	R	R
|---------- Direct Outputs	RW	RW	R	R	R
|---------- Teleprotection	RW	RW	R	R	R
|---------- Direct Analogs	RW	RW	R	R	R
|---------- Direct Integers	RW	RW	R	R	R
|---------- Transducer I/O	RW	RW	R	R	R
|---------- Testing	RW	RW	R	R	R
|---------- Front Panel Labels Designer	NA	NA	NA	NA	NA
|---------- Protection Summary	NA	NA	NA	NA	NA
Commands	RW	RW	RW	R	R
|---------- Virtual Inputs	RW	RW	RW	R	R
|---------- Clear Records	RW	RW	RW	R	R
|---------- Set Date and Time	RW	RW	RW	R	R
User Displays	R	R	R	R	R
Targets	R	R	R	R	R
Actual Values	R	R	R	R	R
|---------- Front panel labels designer	R	R	R	R	R
|---------- Status	R	R	R	R	R
|---------- Metering	R	R	R	R	R
|---------- Transducer I/O	R	R	R	R	R
|---------- Records	R	R	R	R	R
|---------- Product Info	R	R	R	R	R
Maintenance	RW	RW	R	R	R
|---------- Modbus Analyzer	NA	NA	NA	NA	NA
|---------- Change front panel	RW	RW	RW	R	R
|---------- Update firmware	Yes	No	No	No	No
|---------- Retrieve file	Yes	No	No	No	No

Table Notes:

RW = read and write access

R = read access

Supervisor = RW (default), Administrator = R (default), Administrator = RW (only if Supervisor role is disabled)

NA = the permission is not enforced by CyberSentry security

CyberSentry user authentication

The following types of authentication are supported by CyberSentry to access the UR device:

2

- Device Authentication (local UR device authenticates)
- Server Authentication (RADIUS server authenticates)

The EnerVista software allows access to functionality that is determined by the user role, which comes either from the local UR device or the RADIUS server.

The EnerVista software has a device authentication option on the login screen for accessing the UR device. When the "Device" button is selected, the UR uses its local authentication database and not the RADIUS server to authenticate the user. In this case, it uses its built-in roles (Administrator, Engineer, Supervisor, Observer, Operator, or Administrator and Supervisor when Device Authentication is disabled) as login names and the associated passwords are stored on the UR device. As such, when using the local accounts, access is not user-attributable.

In cases where user-attributable access is required especially to facilitate auditable processes for compliance reasons, use RADIUS authentication.

When the "Server" Authentication Type option is selected, the UR uses the RADIUS server and not its local authentication database to authenticate the user.

No password or security information is displayed in plain text by the EnerVista software or UR device, nor is such information ever transmitted without cryptographic protection.

CyberSentry server authentication

The UR has been designed to direct automatically the authentication requests based on user names. In this respect, local account names on the UR are considered as reserved and not used on a RADIUS server.

The UR detects automatically whether an authentication request is to be handled remotely or locally. As there are five local accounts possible on the UR, if the user ID credential does not match one of the five local accounts, the UR forwards automatically the request to a RADIUS server when one is provided.

If a RADIUS server is provided, but is unreachable over the network, server authentication requests are denied. In this situation, use local UR accounts to gain access to the UR system.

2.4 Order codes

The order code is on the product label and indicates the product options applicable.

The L90 is available as a 19-inch rack horizontal mount or reduced-size (¾) vertical unit. It consists of the following modules: power supply, CPU, CT/VT, contact input and output, transducer input and output, and inter-relay communications. Module options are specified at the time of ordering.

The order codes shown here are subject to change without notice. See the web page for the product for the latest options.

The order code depends on the mounting option (horizontal or vertical) and the type of CT/VT modules (enhanced diagnostic CT/VT modules or HardFiber™ process bus module). The process bus module provides an interface to HardFiber Bricks.

NOTE

The R-GOOSE protocol described in IEC 61850-8-1 is available through the IEC 61850 software option. R-GOOSE security requires the CyberSentry software option.

For Japanese, the settings display in Japanese on the graphical front panel, while the keys printed on the panel are in English.

2.4.1 Order codes with enhanced CT/VT modules

Table 2-4: L90 order codes for horizontal units

	L90 - * ** - * * * - F ** - H ** - L ** - N ** - S ** - U ** - W/X **		Full Size Horizontal Mount
BASE UNIT	L90		Base Unit
CPU	T		RS485 and Three Multi-mode fiber 100Base-FX (SFP with LC)
	U		RS485 and Two Multi-mode fiber 100Base-FX (SFP with LC), One 10/100Base-TX (SFP with RJ45)
	V		RS485 and Three 10/100Base-TX (SFP with RJ45)
	W		RS485 with Two 100Base-FX Ethernet, multimode ST + 10/100Base-TX Ethernet, RJ-45

	L90 - * ** - * * * - F ** - H ** - L ** - N ** - S ** - U ** - W/X **	Full Size Horizontal Mount
BASE UNIT	L90	Base Unit
SOFTWARE OPTIONS	00	No software options
	02	Breaker and half
	03	IEC 61850
	05	Breaker and half and IEC 61850
	06	Phasor measurement unit (PMU)
	07	IEC 61850 and PMU
	08	Breaker and half and PMU
	09	Breaker and half, IEC 61850, and PMU
	24	In-zone transformer protection
	25	In-zone transformer protection and IEC 61850
	26	In-zone transformer protection and PMU
	27	In-zone transformer protection, IEC 61850, and PMU
	80	In-zone transformer and Breaker and half
	81	In-zone transformer, IEC 61850, and Breaker and half
	82	In-zone transformer, Breaker and half, and PMU
	83	In-zone transformer, IEC 61850, Breaker and half, and PMU
	A0	CyberSentry Lvl 1
	A2	CyberSentry Lvl 1 and Breaker and half
	A3	CyberSentry Lvl 1 and IEC 61850
	A5	CyberSentry Lvl 1, IEC 61850, and Breaker and half
	A6	CyberSentry Lvl 1 and PMU
	A7	CyberSentry Lvl 1, IEC 61850, and PMU
	A8	CyberSentry Lvl 1, PMU, and Breaker and half
	A9	CyberSentry Lvl 1, IEC 61850, PMU, and Breaker and half
	AO	CyberSentry Lvl 1 and In-zone transformer protection
	AP	CyberSentry Lvl 1, IEC 61850, and In-zone transformer protection
	AQ	CyberSentry Lvl 1, PMU, and In-zone transformer protection
	AR	CyberSentry Lvl 1, IEC 61850, PMU, and In-zone transformer protection
	B0	IEEE 1588
	B2	IEEE 1588 and Breaker and half
	B3	IEEE 1588 and IEC 61850
	B5	IEEE 1588, IEC 61850, and Breaker and half
	B6	IEEE 1588 and PMU
	B7	IEEE 1588, IEC 61850, and PMU
	B8	IEEE 1588, PMU, and Breaker and half
	B9	IEEE 1588, IEC 61850, PMU, and Breaker and half
	BO	IEEE 1588 and In-zone transformer protection
	BP	IEEE 1588, IEC 61850, and In-zone transformer protection
	BQ	IEEE 1588, PMU, and In-zone transformer protection
	BR	IEEE 1588, IEC 61850, PMU, and In-zone transformer protection
	C0	Parallel Redundancy Protocol (PRP)
	C2	PRP and Breaker and half
	C3	PRP and IEC 61850
	C5	PRP, IEC 61850, and Breaker and half
	C6	PRP and PMU
	C7	PRP, IEC 61850, and PMU
	C8	PRP, Breaker and half, and PMU
	C9	PRP, IEC 61850, Breaker and half, and PMU
	CO	PRP and In-zone transformer protection
	CP	PRP, In-zone transformer protection, and IEC 61850
	CQ	PRP, In-zone transformer protection, and PMU
	CR	PRP, In-zone transformer protection, IEC 61850, and PMU
	D0	IEEE 1588 and CyberSentry Lvl 1
	D2	IEEE 1588, CyberSentry Lvl 1, and Breaker and half
	D3	IEEE 1588, CyberSentry Lvl 1, and IEC 61850
	D5	IEEE 1588, CyberSentry Lvl 1, IEC 61850, and Breaker and half
	D6	IEEE 1588, CyberSentry Lvl 1, and PMU
	D7	IEEE 1588, CyberSentry Lvl 1, IEC 61850, and PMU
	D8	IEEE 1588, CyberSentry Lvl 1, Breaker and half, and PMU
	D9	IEEE 1588, CyberSentry Lvl 1, IEC 61850, Breaker and half, and PMU
	DO	IEEE 1588, CyberSentry Lvl 1, and In-zone transformer protection
	DP	IEEE 1588, CyberSentry Lvl 1, IEC 61850, and In-zone transformer protection
	DQ	IEEE 1588, CyberSentry Lvl 1, PMU, and In-zone transformer protection
	DR	IEEE 1588, CyberSentry Lvl 1, IEC 61850, PMU, and In-zone transformer protection
	E0	IEEE 1588 and PRP
	E2	IEEE 1588, PRP, and Breaker and half
	E3	IEEE 1588, PRP, and IEC 61850
	E5	IEEE 1588, PRP, IEC 61850, and Breaker and half
	E6	IEEE 1588, PRP, and PMU
	E7	IEEE 1588, PRP, IEC 61850, and PMU
	E8	IEEE 1588, PRP, Breaker and half, and PMU
	E9	IEEE 1588, PRP, IEC 61850, Breaker and half, and PMU
	EO	IEEE 1588, PRP, and In-zone transformer protection
	EP	IEEE 1588, PRP, In-zone transformer protection, and IEC 61850
	EQ	IEEE 1588, PRP, In-zone transformer protection, and PMU
	ER	IEEE 1588, PRP, In-zone transformer protection, IEC 61850, and PMU
	F0	PRP and CyberSentry Lvl 1
	F2	PRP, CyberSentry Lvl 1, and Breaker and half
	F3	PRP, CyberSentry Lvl 1, and IEC 61850
	F5	PRP, CyberSentry Lvl 1, IEC 61850, and Breaker and half
	F6	PRP, CyberSentry Lvl 1, and PMU
	F7	PRP, CyberSentry Lvl 1, IEC 61850, and PMU
	F8	PRP, CyberSentry Lvl 1, Breaker and half, and PMU
	F9	PRP, CyberSentry Lvl 1, IEC 61850, Breaker and half, and PMU
	FO	PRP, CyberSentry Lvl 1,In-zone transformer protection
	FP	PRP, CyberSentry Lvl 1,In-zone transformer protection, and IEC 61850
	FQ	PRP, CyberSentry Lvl 1, In-zone transformer protection, and PMU
	FR	PRP, CyberSentry Lvl 1, In-zone transformer protection, IEC 61850, and PMU
	G0	IEEE 1588, PRP, and CyberSentry Lvl 1
	G2	IEEE 1588, PRP, CyberSentry Lvl 1, and Breaker and half
	G3	IEEE 1588, PRP, CyberSentry Lvl 1, and IEC 61850
	G5	IEEE 1588, PRP, CyberSentry LVl 1, IEC 61850, and Breaker and half
	G6	IEEE 1588, PRP, CyberSentry Lvl 1, and PMU
	G7	IEEE 1588, PRP, CyberSentry Lvl 1, IEC 61850, and PMU
	G8	IEEE 1588, PRP, CyberSentry Lvl 1, Breaker and half, and PMU
	G9	IEEE 1588, PRP, CyberSentry Lvl 1, IEC 16850, Breaker and half, and PMU
	GO	IEEE 1588, PRP, CyberSentry Lvl 1, In-zone transformer protection
	GP	IEEE 1588 PRP, CyberSentry Lvl 1, In-zone transformer protection, and IEC 61850
	GQ	IEEE 1588, PRP, CyberSentry Lvl 1, In-zone transformer protection, and PMU

2

	L90 - * ** - * * * - F ** - H ** - L ** - N ** - S ** - U ** - W/X **		Full Size Horizontal Mount
BASE UNIT	L90		Base Unit
		GR	IEEE 1588, PRP, CyberSentry Lvl 1, In-zone transformer protection, IEC 61850, and PMU
		H0	CyberSentry Lvl 1, In-zone transformer protection, and Breaker and half
		H1	CyberSentry Lvl 1, In-zone transformer protection, IEC 61850, and Breaker and half
		H2	CyberSentry Lvl 1, In-zone transformer protection, Breaker and half, and PMU
		H3	CyberSentry Lvl 1, In-zone transformer protection, IEC 61850, Breaker and half, and PMU
		H4	IEEE 1588, In-zone transformer protection, and Breaker and half
		H5	IEEE 1588, In-zone transformer protection, IEC 6850, and Breaker and half
		H6	IEEE 1588, In-zone transformer protection, Breaker and half, and PMU
		H7	IEEE 1588, In-zone transformer protection, IEC 61850, Breaker and half, and PMU
		H8	PRP, In-zone transformer protection, and Breaker and half
		H9	PRP, In-zone transformer protection, IEC 61850, and Breaker and half
		HA	PRP, In-zone transformer protection, Breaker and half, and PMU
		HB	PRP, In-zone transformer protection, IEC 61850, Breaker and half, and PMU
		HC	IEEE 1588, CyberSentry Lvl 1, In-zone transformer protection, and Breaker and half
		HD	IEEE 1588, CyberSentry Lvl 1, In-zone transformer protection, IEC 61850, and Breaker and half
		HE	IEEE 1588, CyberSentry Lvl 1, In-zone transformer protection, Breaker and half, and PMU
		HF	IEEE 1588, CyberSentry Lvl 1, In-zone transformer protection, IEC 61580, Breaker and half, PMU
		HG	IEEE 1588, PRP, In-zone transformer protection, and Breaker and half
		HH	IEEE 1588, PRP, In-zone transformer protection, IEC 61850, and Breaker and half
		HI	IEEE 1588, PRP, In-zone transformer protection, Breaker and half, and PMU
		HJ	IEEE 1588, PRP, In-zone transformer protection, IE 61850, Breaker and half, and PMU
		HK	PRP, CyberSentry Lvl 1, In-zone transformer protection, and Breaker and half
		HL	PRP, CyberSentry Lvl 1, In-zone transformer protection, IEC 61850, and Breaker and half
		HM	PRP, CyberSentry Lvl 1, In-zone transformer protection, Breaker and half, and PMU
		HN	PRP, CyberSentry Lvl 1, In-zone transformer protection, IEC 61850, Breaker and half, and PMU
		HO	IEEE 1588, PRP, CyberSentry Lvl 1, In-zone transformer protection, Breaker and half
		HP	IEEE 1588, PRP, CyberSentry Lvl 1, In-zone transformer protection, IEC 61850, Breaker and half
		HQ	IEEE 1588, PRP, CyberSentry Lvl 1, In-zone transformer protection, Breaker and half, and PMU
		HR	IEEE 1588, PRP, CyberSentry Lvl 1, In-zone Tx protection, IEC 61850, breaker-and-a half, and PMU
		HS	IEC 60870-5-103 + IEEE 1588 + PRP + In-zone transformer protection + Breaker and half
		HT	IEC 60870-5-103 + IEEE 1588 + PRP + In-zone Tx protection + IEC 61850 + Breaker and half
		HU	IEC 60870-5-103 + IEEE 1588 + PRP + In-zone transformer protection + Breaker and half + PMU
		HV	IEC 60870-5-103 + IEEE 1588 + PRP + In-zone transformer protection + IEC 61850 + Breaker and half + PMU
		HW	IEC 60870-5-103 + IEEE 1588 + PRP + CyberSentry Lvl 1 + In-zone transformer protection + Breaker and half
		HX	IEC 60870-5-103 + IEEE 1588 + PRP + CyberSentry Lvl 1 + In-zone transformer protection + IEC 61850 + Breaker and half
		HY	IEC 60870-5-103 + IEEE 1588 + PRP + CyberSentry Lvl 1 + In-zone transformer protection + Breaker and half + PMU
		HZ	IEC 60870-5-103 + IEEE 1588 + PRP + CyberSentry Lvl 1 + In-zone transformer protection + IEC 61850 + PMU
		J0	IEC 60870-5-103
		J2	IEC 60870-5-103 + Breaker and half
		J3	IEC 60870-5-103 + IEC 61850
		J5	IEC 60870-5-103 + IEC 61850 + Breaker and half
		J6	IEC 60870-5-103 + PMU
		J7	IEC 60870-5-103 + IEC 61850 + PMU
		J8	IEC 60870-5-103 + Breaker and half + PMU
		J9	IEC 60870-5-103 + IEC 61850 + Breaker and half + PMU
		JO	IEC 60870-5-103 + In-zone transformer protection
		JP	IEC 60870-5-103 + In-zone transformer protection + IEC 61850
		JQ	IEC 60870-5-103 + In-zone transformer protection + PMU
		JR	IEC 60870-5-103 + In-zone transformer protection + IEC 61850 + PMU
		K0	IEEE 1588 + PRP + IEC60870-5-103
		K2	IEEE 1588 + PRP + IEC60870-5-103 + Breaker and half
		K3	IEEE 1588 + PRP + IEC60870-5-103 + IEC 61850
		K5	IEEE 1588 + PRP + IEC60870-5-103 + IEC 61850 + Breaker and half
		K6	IEEE 1588 + PRP + IEC60870-5-103 + PMU
		K7	IEEE 1588 + PRP + IEC60870-5-103 + IEC 61850 + PMU
		K8	IEEE 1588 + PRP + IEC60870-5-103 + Breaker and half + PMU
		K9	IEEE 1588 + PRP + IEC60870-5-103 + IEC 61850 + Breaker and half + PMU
		KO	IEEE 1588 + PRP + IEC60870-5-103 + In-zone transformer protection
		KP	IEEE 1588 + PRP + IEC60870-5-103 + In-zone transformer protection + IEC 61850
		KQ	IEEE 1588 + PRP + IEC60870-5-103 + In-zone transformer protection + PMU
		KR	IEEE 1588 + PRP + IEC60870-5-103 + In-zone transformer protection + IEC 61850 + PMU
		L0	IEC60870-5-103 + IEEE 1588 + PRP + CyberSentry Lvl 1
		L2	IEC60870-5-103 + IEEE 1588 + PRP + CyberSentry Lvl 1 + Breaker and half
		L3	IEC60870-5-103 + IEEE 1588 + PRP + CyberSentry Lvl 1 + IEC 61850
		L5	IEC60870-5-103 + IEEE 1588 + PRP + CyberSentry Lvl 1 + IEC 61850 + Breaker and half
		L6	IEC60870-5-103 + IEEE 1588 + PRP + CyberSentry Lvl 1 + PMU
		L7	IEC60870-5-103 + IEEE 1588 + PRP + CyberSentry Lvl 1 + IEC 61850 + PMU
		L8	IEC60870-5-103 + IEEE 1588 + PRP + CyberSentry Lvl 1 + Breaker and half + PMU

	L90 - * ** - * * * - F ** - H ** - L ** - N ** - S ** - U ** - W/X **		Full Size Horizontal Mount
BASE UNIT	L90		Base Unit
		L9	IEC60870-5-103 + IEEE 1588 + PRP + CyberSentry Lvl 1 + IEC 61850 + Breaker and half + PMU
		LO	IEC60870-5-103 + IEEE 1588 + PRP + CyberSentry Lvl 1 + In-zone transformer protection
		LP	IEC60870-5-103 + IEEE 1588 + PRP + CyberSentry Lvl 1 + In-zone transformer protection + IEC 61850
		LQ	IEC60870-5-103 + IEEE 1588 + PRP + CyberSentry Lvl 1 + In-zone transformer protection + PMU
		LR	IEC60870-5-103 + IEEE 1588 + PRP + CyberSentry Lvl 1 + In-zone transformer protection + IEC 61850 + PMU
		M0	IEC 61850 + PMU + 61850-90-5
		M1	IEC 61850 + Breaker and half + PMU + 61850-90-5
		M4	In-zone TX protection + IEC 61850 + PMU + 61850-90-5
		M6	In-zone TX + IEC 61850 + Breaker and half + PMU + 61850-90-5
		M7	CyberSentry UR Lvl 1 + IEC 61850 + PMU + 61850-90-5
		M8	CyberSentry UR Lvl 1 + IEC 61850 + Breaker and half + PMU + 61850-90-5
		MB	CyberSentry UR Lvl 1 + In-zone TX protection + IEC 61850 + PMU + 61850-90-5
		MD	IEEE 1588 + IEC 61850 + PMU + 61850-90-5
		ME	IEEE 1588 + IEC 61850 + Breaker and half + PMU + 61850-90-5
		MH	IEEE 1588 + In-zone TX protection + IEC 61850 + PMU + 61850-90-5
		MJ	PRP + IEC 61850 + PMU + 61850-90-5
		MK	PRP + IEC 61850 + Breaker and half + PMU + 61850-90-5
		MN	PRP + In-zone TX protection + IEC 61850 + PMU + 61850-90-5
		MP	IEEE 1588 + CyberSentry UR Lvl 1 + IEC 61850 + PMU + 61850-90-5
		MQ	IEEE 1588 + CyberSentry UR Lvl 1 + IEC 61850 + Breaker and half + PMU + 61850-90-5
		MT	IEEE 1588 + CyberSentry UR Lvl 1 + In-zone TX protection + IEC 61850 + PMU + 61850-90-5
		MV	IEEE 1588 + PRP + IEC 61850 + PMU + 61850-90-5
		MW	IEEE 1588 + PRP + IEC 61850 + Breaker and half + PMU + 61850-90-5
		MZ	IEEE 1588 + PRP + In-zone TX protection + IEC 61850 + PMU + 61850-90-5
		N1	PRP + CyberSentry UR Lvl 1 + IEC 61850 + PMU + 61850-90-5
		N2	PRP + CyberSentry UR Lvl 1 + IEC 61850 + Breaker and half + PMU + 61850-90-5
		N5	PRP + CyberSentry UR Lvl 1 + In-zone TX protection + IEC 61850 + PMU + 61850-90-5
		N7	IEEE 1588 + PRP + CyberSentry UR Lvl 1 + IEC 61850 + PMU + 61850-90-5
		N8	IEEE 1588 + PRP + CyberSentry UR Lvl 1 + IEC 61850 + Breaker and half + PMU + 61850-90-5
		NB	IEEE 1588 + PRP + CyberSentry UR Lvl 1 + In-zone TX protection + IEC 61850 + PMU + 61850-90-5
		ND	IEC 60870-5-103 + IEC 61850 + PMU + 61850-90-5
		NE	IEC 60870-5-103 + IEC 61850 + Breaker and Half + PMU + 61850-90-5
		NH	IEC 60870-5-103 + In-zone TX protection + IEC 61850 + PMU + 61850-90-5
		NJ	IEEE 1588 + PRP + IEC 60870-5-103 + IEC 61850 + PMU + 61850-90-5
		NK	IEEE 1588 + PRP + IEC 60870-5-103 + IEC 61850 + Breaker and half + PMU + 61850-90-5
		NN	IEEE 1588 + PRP + IEC 60870-5-103 + In-zone TX protection + IEC 61850 + PMU + 61850-90-5
		NP	IEC 60870-5-103 + IEEE 1588 + PRP + CyberSentry UR Lvl 1 + IEC 61850 + PMU + 61850-90-5
		NQ	IEC 60870-5-103 + IEEE 1588 + PRP + CyberSentry UR Lvl 1 + IEC 61850 + Breaker and half + PMU + 61850-90-5
		NT	IEC 60870-5-103 + IEEE 1588 + PRP + CyberSentry UR Lvl 1 + In-zone TX protection + IEC 61850 + PMU + 61850-90-5
		NV	CyberSentry UR Lvl 1 + In-zone TX + IEC 61850 + Breaker and half + PMU + 61850-90-5
		NW	IEEE 1588 + In-zone TX + IEC 61850 + Breaker and half + PMU + 61850-90-5
		NX	PRP + In-zone TX + IEC 61850 + Breaker and half + PMU + 61850-90-5
		NY	IEEE 1588 + CyberSentry UR Lvl 1 + In-zone TX + IEC 61850 + Breaker and half + PMU + 61850-90-5
		NZ	IEEE 1588 + PRP + In-zone TX + IEC 61850 + Breaker and half + PMU + 61850-90-5
		O0	PRP + CyberSentry UR Lvl 1 + In-zone TX + IEC 61850 + Breaker and half + PMU + 61850-90-5
		O1	IEEE 1588 + PRP + CyberSentry UR Lvl 1 + In-zone TX + IEC 61850 + Breaker and half + PMU + 61850-90-5
		O2	IEC 60870-5-103 + IEEE 1588 + PRP + In-zone TX + IEC 61850 + Breaker and half + PMU + 61850-90-5
		O3	IEC 60870-5-103 + IEEE 1588 + PRP + CyberSentry UR Lvl 1 + In-zone TX + IEC 61850 + Breaker and half + PMU + 61850-90-5
MOUNT/COATING	H		Horizontal (19" rack)
	A		Horizontal (19" rack) with harsh environmental coating
FRONT PANEL + INTERFACE		C	English display
		D	French display
		R	Russian display
		P	English display with 4 small and 12 large programmable pushbuttons
		G	French display with 4 small and 12 large programmable pushbuttons
		S	Russian display with 4 small and 12 large programmable pushbuttons
		K	Enhanced front panel with English display
		M	Enhanced front panel with French display
		Q	Enhanced front panel with Russian display
		U	Enhanced front panel with Chinese display
		L	Enhanced front panel with English display and user-programmable pushbuttons
		N	Enhanced front panel with French display and user-programmable pushbuttons
		T	Enhanced front panel with Russian display and user-programmable pushbuttons
		V	Enhanced front panel with Chinese display and user-programmable pushbuttons
		W	Enhanced front panel with Turkish display
		Y	Enhanced front panel with Turkish display and user-programmable pushbuttons
		I	Enhanced front panel with German display
		J	Enhanced front panel with German display and user-programmable pushbuttons

2

	L90	- *	**	- *	*	*	- F **	- H **	- L **	- N **	- S **	- U **	- W/X **		Full Size Horizontal Mount
BASE UNIT	L90	|	|	|	|	|	|	|	|	|	|	|	|	|	Base Unit
					H	|	|	|	|	|	|	|	|	|	Enhanced front panel with Polish display
					O	|	|	|	|	|	|	|	|	|	Enhanced front panel with Polish display and user-programmable pushbuttons
					E	|	|	|	|	|	|	|	|	|	7" Graphical front panel display in multiple languages with USB front port and programmable pushbuttons (English, French, Chinese, Russian, Turkish, German, Polish, Japanese)
POWER SUPPLY (redundant supply must be same type as main supply)						H	|	|	|	|	|	|	|		125 / 250 V AC/DC power supply
						H	|	|	|	|	|	|	|	RH	125 / 250 V AC/DC with redundant 125 / 250 V AC/DC power supply
						L	|	|	|	|	|	|	|	|	24 to 48 V (DC only) power supply
						L	|	|	|	|	|	|	|	RL	24 to 48 V (DC only) with redundant 24 to 48 V DC power supply
CT/VT DSP (L90 with two DSPs requires a "Breaker and half" software option)							|	|	XX	|	|	|	|	|	No module (slot L only)
							8L	|	8L	|	|	|	|	|	Standard 4CT/4VT with enhanced diagnostics (required for PMU option)
							8M	|	8M	|	|	|	|	|	Sensitive Ground 4CT/4VT with enhanced diagnostics
							8N	|	8N	|	|	|	|	|	Standard 8CT with enhanced diagnostics
							8R	|	8R	|	|	|	|	|	Sensitive Ground 8CT with enhanced diagnostics
CONTACT INPUTS/OUTPUTS								XX	XX	XX	XX	XX	|	|	No Module
								4A	4A	4A	4A	4A	|	|	4 Solid-State (no monitoring) MOSFET outputs
								4B	4B	4B	4B	4B	|	|	4 Solid-State (voltage with optional current) MOSFET outputs
								4C	4C	4C	4C	4C	|	|	4 Solid-State (current with optional voltage) MOSFET outputs
								4D	4D	4D	4D	4D	|	|	16 Contact inputs with Auto-Burnishing (maximum of three modules within a case)
								4L	4L	4L	4L	4L	|	|	14 Form-A (no monitoring) Latching outputs
								67	67	67	67	67	|	|	8 Form-A (no monitoring) outputs
								6A	6A	6A	6A	6A	|	|	2 Form-A (voltage with optional current) and 2 Form-C outputs, 8 contact inputs
								6B	6B	6B	6B	6B	|	|	2 Form-A (voltage with optional current) and 4 Form-C outputs, 4 contact inputs
								6C	6C	6C	6C	6C	|	|	8 Form-C outputs
								6D	6D	6D	6D	6D	|	|	16 Contact inputs
								6E	6E	6E	6E	6E	|	|	4 Form-C outputs, 8 contact inputs
								6F	6F	6F	6F	6F	|	|	8 Fast Form-C outputs
								6G	6G	6G	6G	6G	|	|	4 Form-A (voltage with optional current) outputs, 8 contact inputs
								6H	6H	6H	6H	6H	|	|	6 Form-A (voltage with optional current) outputs, 4 contact inputs
								6K	6K	6K	6K	6K	|	|	4 Form-C and 4 Fast Form-C outputs
								6L	6L	6L	6L	6L	|	|	2 Form-A (current with optional voltage) and 2 Form-C outputs, 8 contact inputs
								6M	6M	6M	6M	6M	|	|	2 Form-A (current with optional voltage) and 4 Form-C outputs, 4 contact inputs
								6N	6N	6N	6N	6N	|	|	4 Form-A (current with optional voltage) outputs, 8 contact inputs
								6P	6P	6P	6P	6P	|	|	6 Form-A (current with optional voltage) outputs, 4 contact inputs
								6R	6R	6R	6R	6R	|	|	2 Form-A (no monitoring) and 2 Form-C outputs, 8 contact inputs
								6S	6S	6S	6S	6S	|	|	2 Form-A (no monitoring) and 4 Form-C outputs, 4 contact inputs
								6T	6T	6T	6T	6T	|	|	4 Form-A (no monitoring) outputs, 8 contact inputs
								6U	6U	6U	6U	6U	|	|	6 Form-A (no monitoring) outputs, 4 contact inputs
								6V	6V	6V	6V	6V	|	|	2 Form-A outputs, 1 Form-C output, 2 Form-A (no monitoring) latching outputs, 8 contact inputs
								6W	6W	6W	6W	6W	|	|	30 Contact inputs - pin terminals (max 4 modules)
								6X	6X	6X	6X	6X	|	|	18 Form-A (no monitoring) outputs - pin terminals (max 4 modules)
TRANSDUCER INPUTS/OUTPUTS (select a maximum of 3 per unit)								5A	5A	5A	5A	5A	|	|	4 DCmA inputs, 4 DCmA outputs (only one 5A or 5D module is allowed)
								5C	5C	5C	5C	5C	|	|	8 RTD inputs
								5D	5D	5D	5D	5D	|	|	4 RTD inputs, 4 DCmA outputs (only one 5A or 5D module is allowed)
								5E	5E	5E	5E	5E	|	|	4 RTD inputs, 4 DCmA inputs
								5F	5F	5F	5F	5F	|	|	8 DCmA inputs
INTER-RELAY COMMUNICATIONS (select a maximum of 1 per unit)												2A	2A	C37.94SM, 1300 nm single-mode, ELED, 1 channel single-mode
												2B	2B	C37.94SM, 1300 nm single-mode, ELED, 2 channel single-mode
												2I	2I	Channel 1 - IEEE C37.94, MM, 64/128 kbps; Channel 2 - 1300 nm, single-mode, Laser
												2J	2J	Channel 1 - IEEE C37.94, MM, 64/128 kbps; Channel 2 - 1550 nm, single-mode, Laser
												72	72	1550 nm, single-mode, Laser, 1 Channel
												73	73	1550 nm, single-mode, Laser, 2 Channel
												76	76	IEEE C37.94, 820 nm, 64 kbps, multimode, LED, 1 Channel
												77	77	IEEE C37.94, 820 nm, 64 kbps, multimode, LED, 2 Channels
												7A	7A	820 nm, multimode, LED, 1 Channel
												7B	7B	1300 nm, multimode, LED, 1 Channel
												7C	7C	1300 nm, single-mode, ELED, 1 Channel
												7D	7D	1300 nm, single-mode, Laser, 1 Channel
												7F	7F	Channel 1 - G.703; Channel 2 - 1300 nm, multimode
												7G	7G	Channel 1 - G.703; Channel 2 - 1300 nm, single-mode ELED
												7H	7H	820 nm, multimode, LED, 2 Channels
												7I	7I	1300 nm, multimode, LED, 2 Channels
												7J	7J	1300 nm, single-mode, ELED, 2 Channels
												7K	7K	1300 nm, single-mode, Laser, 2 Channels
												7M	7M	Channel 1 - RS422; Channel 2 - 1300 nm, multimode, LED
												7N	7N	Channel 1 - RS422; Channel 2 - 1300 nm, single-mode, ELED
												7P	7P	Channel 1 - RS422; Channel 2 - 1300 nm, single-mode, Laser
												7Q	7Q	Channel 1 - G.703; Channel 2 - 1300 nm, single-mode Laser
												7R	7R	G.703, 1 Channel
												7S	7S	G.703, 2 Channels
												7T	7T	RS422, 1 Channel
												7V	7V	RS422, 2 Channels, 2 Clock Inputs
												7W	7W	RS422, 2 Channels

Table 2-5: L90 order codes for reduced-size vertical units

	L90	- *	**	- *	*	*	- F **	- H **	- L **	- N **	- R **		Reduced Size Vertical Mount
BASE UNIT	L90	|	|	|	|	|	|	|	|	|	|	|	Base Unit
CPU		T	|	|	|	|	|	|	|	|	|	RS485 and Three Multi-mode fiber 100Base-FX (SFP with LC)
		U	|	|	|	|	|	|	|	|	|	RS485 and Two Multi-mode fiber 100Base-FX (SFP with LC), One 10/100Base-TX (SFP with RJ45)
		V	|	|	|	|	|	|	|	|	|	RS485 and Three 10/100Base-TX (SFP with RJ45)
		W	|	|	|	|	|	|	|	|	|	RS485 with Two 100Base-FX Ethernet, multimode ST + 10/100Base-TX Ethernet, RJ-45

	L90 - * ** - * * * - F ** - H ** - L ** - N ** - R **	Reduced Size Vertical Mount
SOFTWARE OPTIONS	00	No software options
	02	Breaker and half software
	03	IEC 61850
	05	Breaker and half software and IEC 61850
	06	Phasor measurement unit (PMU)
	07	IEC 61850 and PMU
	08	Breaker and half and PMU
	09	Breaker and half, IEC 61850, and PMU
	24	In-zone transformer protection
	25	In-zone transformer protection and IEC 61850
	26	In-zone transformer protection and PMU
	27	In-zone transformer protection, IEC 61850, and PMU
	80	In-zone transformer and Breaker and half
	81	In-zone transformer, IEC 61850, and Breaker and half
	82	In-zone transformer, Breaker and half, and PMU
	83	In-zone transformer, IEC 61850, Breaker and half, and PMU
	A0	CyberSentry Lvl 1
	A2	CyberSentry Lvl 1 and Breaker and half
	A3	CyberSentry Lvl 1 and IEC 61850
	A5	CyberSentry Lvl 1, IEC 61850, and Breaker and half
	A6	CyberSentry Lvl 1 and PMU
	A7	CyberSentry Lvl 1, IEC 61850, and PMU
	A8	CyberSentry Lvl 1, PMU, and Breaker and half
	A9	CyberSentry Lvl 1, IEC 61850, PMU, and Breaker and half
	AO	CyberSentry Lvl 1 and In-zone transformer protection
	AP	CyberSentry Lvl 1, IEC 61850, and In-zone transformer protection
	AQ	CyberSentry Lvl 1, PMU, and In-zone transformer protection
	AR	CyberSentry Lvl 1, IEC 61850, PMU, and In-zone transformer protection
	B0	IEEE 1588
	B2	IEEE 1588 and Breaker and half
	B3	IEEE 1588 and IEC 61850
	B5	IEEE 1588, IEC 61850, and Breaker and half
	B6	IEEE 1588 and PMU
	B7	IEEE 1588, IEC 61850, and PMU
	B8	IEEE 1588, PMU, and Breaker and half
	B9	IEEE 1588, IEC 61850, PMU, and Breaker and half
	BO	IEEE 1588 and In-zone transformer protection
	BP	IEEE 1588, IEC 61850, and In-zone transformer protection
	BQ	IEEE 1588, PMU, and In-zone transformer protection
	BR	IEEE 1588, IEC 61850, PMU, and In-zone transformer protection
	C0	Parallel Redundancy Protocol (PRP)
	C2	PRP and Breaker and half
	C3	PRP and IEC 61850
	C5	PRP, IEC 61850, and Breaker and half
	C6	PRP and PMU
	C7	PRP, IEC 61850, and PMU
	C8	PRP, Breaker and half, and PMU
	C9	PRP, IEC 61850, Breaker and half, and PMU
	CO	PRP and In-zone transformer protection
	CP	PRP, In-zone transformer protection, and IEC 61850
	CQ	PRP, In-zone transformer protection, and PMU
	CR	PRP, In-zone transformer protection, IEC 61850, and PMU
	D0	IEEE 1588 and CyberSentry Lvl 1
	D2	IEEE 1588, CyberSentry Lvl 1, and Breaker and half
	D3	IEEE 1588, CyberSentry Lvl 1, and IEC 61850
	D5	IEEE 1588, CyberSentry Lvl 1, IIEC 61850, and Breaker and half
	D6	IEEE 1588, CyberSentry Lvl 1, and PMU
	D7	IEEE 1588, CyberSentry Lvl 1, IEC 61850, and PMU
	D8	IEEE 1588, CyberSentry Lvl 1, Breaker and half, and PMU
	D9	IEEE 1588, CyberSentry Lvl 1, IEC 61850, PMU, and Breaker and half
	DO	IEEE 1588, CyberSentry Lvl 1, and In-zone transformer protection
	DP	IEEE 1588, CyberSentry Lvl 1, IEC 61850, and In-zone transformer protection
	DQ	IEEE 1588, CyberSentry Lvl 1, PMU, and In-zone transformer protection
	DR	IEEE 1588, CyberSentry Lvl 1, IEC 61850, PMU, and In-zone transformer protection
	E0	IEEE 1588 and PRP
	E2	IEEE 1588, PRP, and Breaker and half
	E3	IEEE 1588, PRP, and IEC 61850
	E5	IEEE 1588, PRP, IEC 61850, and Breaker and half
	E6	IEEE 1588, PRP, and PMU
	E7	IEEE 1588, PRP, IEC 61850, and PMU
	E8	IEEE 1588, PRP, Breaker and half, and PMU
	E9	IEEE 1588, PRP, IEC 61850, Breaker and half, and PMU
	EO	IEEE 1588, PRP, and In-zone transformer protection
	EP	IEEE 1588, PRP, In-zone transformer protection, and IEC 61850
	EQ	IEEE 1588, PRP, In-zone transformer protection, and PMU
	ER	IEEE 1588, PRP, In-zone transformer protection, IEC 61850, and PMU
	F0	PRP and CyberSentry Lvl 1
	F2	PRP, CyberSentry Lvl 1, and Breaker and half
	F3	PRP, CyberSentry Lvl 1, and IEC 61850
	F5	PRP, CyberSentry Lvl 1, IEC 61850, and Breaker and half
	F6	PRP, CyberSentry Lvl 1, and PMU
	F7	PRP, CyberSentry Lvl 1, IEC 61850, and PMU
	F8	PRP, CyberSentry Lvl 1, Breaker and half, and PMU
	F9	PRP, CyberSentry Lvl 1, IEC 61850, Breaker and half, and PMU
	FO	PRP, CyberSentry Lvl 1, In-zone transformer protection
	FP	PRP, CyberSentry Lvl 1, In-zone transformer protection, and IEC 61850
	FQ	PRP, CyberSentry Lvl 1, In-zone transformer protection, and PMU
	FR	PRP, CyberSentry Lvl 1, In-zone transformer protection, IEC 61850, and PMU
	G0	IEEE 1588, PRP, and CyberSentry Lvl 1
	G2	IEEE 1588, PRP, CyberSentry Lvl 1, and Breaker and half
	G3	IEEE 1588, PRP, CyberSentry Lvl 1, and IEC 61850
	G5	IEEE 1588, PRP, CyberSentry LVl 1, IEC 61850, and Breaker and half
	G6	IEEE 1588, PRP, CyberSentry Lvl 1, and PMU
	G7	IEEE 1588, PRP, CyberSentry Lvl 1, IEC 61850, and PMU
	G8	IEEE 1588, PRP, CyberSentry Lvl 1, Breaker and half, and PMU
	G9	IEEE 1588, PRP, CyberSentry Lvl 1, IEC 16850, Breaker and half, and PMU
	GO	IEEE 1588, PRP, CyberSentry Lvl 1, In-zone transformer protection
	GP	IEEE 1588 PRP, CyberSentry Lvl 1, In-zone transformer protection, and IEC 61850
	GQ	IEEE 1588, PRP, CyberSentry Lvl 1, In-zone transformer protection, and PMU
	GR	IEEE 1588, PRP, CyberSentry Lvl 1, In-zone transformer protection, IEC 61850, and PMU
	H0	CyberSentry Lvl 1, In-zone transformer protection, and Breaker and half
	H1	CyberSentry Lvl 1, In-zone transformer protection, IEC 61850, and Breaker and half
	H2	CyberSentry Lvl 1, In-zone transformer protection, Breaker and half, and PMU

2

L90 - * ** - * * * - F ** - H ** - L ** - N ** - R **		Reduced Size Vertical Mount
	H3	CyberSentry Lvl 1, In-zone transformer protection, IEC 61850, Breaker and half, and PMU
	H4	IEEE 1588, In-zone transformer protection, and Breaker and half
	H5	IEEE 1588, In-zone transformer protection, IEC 6850, and Breaker and half
	H6	IEEE 1588, In-zone transformer protection, Breaker and half, and PMU
	H7	IEEE 1588, In-zone transformer protection, IEC 61850, Breaker and half, and PMU
	H8	PRP, In-zone transformer protection, and Breaker and half
	H9	PRP, In-zone transformer protection, IEC 61850, and Breaker and half
	HA	PRP, In-zone transformer protection, Breaker and half, and PMU
	HB	PRP, In-zone transformer protection, IEC 61850, Breaker and half, and PMU
	HC	IEEE 1588, CyberSentry Lvl 1, In-zone transformer protection, and Breaker and half
	HD	IEEE 1588, CyberSentry Lvl 1, In-zone transformer protection, IEC 61850, and Breaker and half
	HE	IEEE 1588, CyberSentry Lvl 1, In-zone transformer protection, Breaker and half, and PMU
	HF	IEEE 1588, CyberSentry Lvl 1, In-zone transformer protection, IEC 61580, Breaker and half, PMU
	HG	IEEE 1588, PRP, In-zone transformer protection, and Breaker and half
	HH	IEEE 1588, PRP, In-zone transformer protection, IEC 61850, and Breaker and half
	HI	IEEE 1588, PRP, In-zone transformer protection, Breaker and half, and PMU
	HJ	IEEE 1588, PRP, In-zone transformer protection, IE 61850, Breaker and half, and PMU
	HK	PRP, CyberSentry Lvl 1, In-zone transformer protection, and Breaker and half
	HL	PRP, CyberSentry Lvl 1, In-zone transformer protection, IEC 61850, and Breaker and half
	HM	PRP, CyberSentry Lvl 1, In-zone transformer protection, Breaker and half, and PMU
	HN	PRP, CyberSentry Lvl 1, In-zone transformer protection, IEC 61850, Breaker and half, and PMU
	HO	IEEE 1588, PRP, CyberSentry Lvl 1, In-zone transformer protection, Breaker and half
	HP	IEEE 1588, PRP, CyberSentry Lvl 1, In-zone transformer protection, IEC 61850, Breaker and half
	HQ	IEEE 1588, PRP, CyberSentry Lvl 1, In-zone transformer protection, breaker-and-a-hal, and PMU
	HR	IEEE 1588, PRP, CyberSentry Lvl 1, In-zone Tx protection, IEC 61850, breaker-and-a half, and PMU
	HS	IEC 60870-5-103 + IEEE 1588 + PRP + In-zone transformer protection + Breaker and half
	HT	IEC 60870-5-103 + IEEE 1588 + PRP + In-zone Tx protection + IEC 61850 + Breaker and half
	HU	IEC 60870-5-103 + IEEE 1588 + PRP + In-zone transformer protection + Breaker and half + PMU
	HV	IEC 60870-5-103 + IEEE 1588 + PRP + In-zone transformer protection + IEC 61850 + Breaker and half + PMU
	HW	IEC 60870-5-103 + IEEE 1588 + PRP + CyberSentry Lvl 1 + In-zone transformer protection + Breaker and half
	HX	IEC 60870-5-103 + IEEE 1588 + PRP + CyberSentry Lvl 1 + In-zone transformer protection + IEC 61850 + Breaker and half
	HY	IEC 60870-5-103 + IEEE 1588 + PRP + CyberSentry Lvl 1 + In-zone transformer protection + Breaker and half + PMU
	HZ	IEC 60870-5-103 + IEEE 1588 + PRP + CyberSentry Lvl 1 + In-zone transformer protection + IEC 61850 + PMU
	J0	IEC 60870-5-103
	J2	IEC 60870-5-103 + Breaker and half
	J3	IEC 60870-5-103 + IEC 61850
	J5	IEC 60870-5-103 + IEC 61850 + Breaker and half
	J6	IEC 60870-5-103 + PMU
	J7	IEC 60870-5-103 + IEC 61850 + PMU
	J8	IEC 60870-5-103 + Breaker and half + PMU
	J9	IEC 60870-5-103 + IEC 61850 + Breaker and half + PMU
	JO	IEC 60870-5-103 + In-zone transformer protection
	JP	IEC 60870-5-103 + In-zone transformer protection + IEC 61850
	JQ	IEC 60870-5-103 + In-zone transformer protection + PMU
	JR	IEC 60870-5-103 + In-zone transformer protection + IEC 61850 + PMU
	K0	IEEE 1588 + PRP + IEC60870-5-103
	K2	IEEE 1588 + PRP + IEC60870-5-103 + Breaker and half
	K3	IEEE 1588 + PRP + IEC60870-5-103 + IEC 61850
	K5	IEEE 1588 + PRP + IEC60870-5-103 + IEC 61850 + Breaker and half
	K6	IEEE 1588 + PRP + IEC60870-5-103 + PMU
	K7	IEEE 1588 + PRP + IEC60870-5-103 + IEC 61850 + PMU
	K8	IEEE 1588 + PRP + IEC60870-5-103 + Breaker and half + PMU
	K9	IEEE 1588 + PRP + IEC60870-5-103 + IEC 61850 + Breaker and half + PMU
	KO	IEEE 1588 + PRP + IEC60870-5-103 + In-zone transformer protection
	KP	IEEE 1588 + PRP + IEC60870-5-103 + In-zone transformer protection + IEC 61850
	KQ	IEEE 1588 + PRP + IEC60870-5-103 + In-zone transformer protection + PMU
	KR	IEEE 1588 + PRP + IEC60870-5-103 + In-zone transformer protection + IEC 61850 + PMU
	L0	IEC60870-5-103 + IEEE 1588 + PRP + CyberSentry Lvl 1
	L2	IEC60870-5-103 + IEEE 1588 + PRP + CyberSentry Lvl 1 + Breaker and half
	L3	IEC60870-5-103 + IEEE 1588 + PRP + CyberSentry Lvl 1 + IEC 61850
	L5	IEC60870-5-103 + IEEE 1588 + PRP + CyberSentry Lvl 1 + IEC 61850 + Breaker and half
	L6	IEC60870-5-103 + IEEE 1588 + PRP + CyberSentry Lvl 1 + PMU
	L7	IEC60870-5-103 + IEEE 1588 + PRP + CyberSentry Lvl 1 + IEC 61850 + PMU
	L8	IEC60870-5-103 + IEEE 1588 + PRP + CyberSentry Lvl 1 + Breaker and half + PMU
	L9	IEC60870-5-103 + IEEE 1588 + PRP + CyberSentry Lvl 1 + IEC 61850 + Breaker and half + PMU
	LO	IEC60870-5-103 + IEEE 1588 + PRP + CyberSentry Lvl 1 + In-zone transformer protection
	LP	IEC60870-5-103 + IEEE 1588 + PRP + CyberSentry Lvl 1 + In-zone transformer protection + IEC 61850
	LQ	IEC60870-5-103 + IEEE 1588 + PRP + CyberSentry Lvl 1 + In-zone transformer protection + PMU
	LR	IEC60870-5-103 + IEEE 1588 + PRP + CyberSentry Lvl 1 + In-zone transformer protection + IEC 61850 + PMU
	M0	IEC 61850 + PMU + 61850-90-5
	M1	IEC 61850 + Breaker and Half + PMU + 61850-90-5
	M4	In-zone TX protection + IEC 61850 + PMU + 61850-90-5
	M6	In-zone TX + IEC 61850 + Breaker and Half + PMU + 61850-90-5
	M7	CyberSentry UR Lvl 1 + IEC 61850 + PMU + 61850-90-5
	M8	CyberSentry UR Lvl 1 + IEC 61850 + Breaker and Half + PMU + 61850-90-5
	MB	CyberSentry UR Lvl 1 + In-zone TX protection + IEC 61850 + PMU + 61850-90-5
	MD	IEEE 1588 + IEC 61850 + PMU + 61850-90-5
	ME	IEEE 1588 + IEC 61850 + Breaker and Half + PMU + 61850-90-5
	MH	IEEE 1588 + In-zone TX protection + IEC 61850 + PMU + 61850-90-5
	MJ	PRP + IEC 61850 + PMU + 61850-90-5
	MK	PRP + IEC 61850 + Breaker and Half + PMU + 61850-90-5
	MN	PRP + In-zone TX protection + IEC 61850 + PMU + 61850-90-5
	MP	IEEE 1588 + CyberSentry UR Lvl 1 + IEC 61850 + PMU + 61850-90-5
	MQ	IEEE 1588 + CyberSentry UR Lvl 1 + IEC 61850 + Breaker and Half + PMU + 61850-90-5
	MT	IEEE 1588 + CyberSentry UR Lvl 1 + In-zone TX protection + IEC 61850 + PMU + 61850-90-5
	MV	IEEE 1588 + PRP + IEC 61850 + PMU + 61850-90-5
	MW	IEEE 1588 + PRP + IEC 61850 + Breaker and Half + PMU + 61850-90-5
	MZ	IEEE 1588 + PRP + In-zone TX protection + IEC 61850 + PMU + 61850-90-5
	N1	PRP + CyberSentry UR Lvl 1 + IEC 61850 + PMU + 61850-90-5
	N2	PRP + CyberSentry UR Lvl 1 + IEC 61850 + Breaker and Half + PMU + 61850-90-5
	N5	PRP + CyberSentry UR Lvl 1 + In-zone TX protection + IEC 61850 + PMU + 61850-90-5
	N7	IEEE 1588 + PRP + CyberSentry UR Lvl 1 + IEC 61850 + PMU + 61850-90-5
	N8	IEEE 1588 + PRP + CyberSentry UR Lvl 1 + IEC 61850 + Breaker and Half + PMU + 61850-90-5
	NB	IEEE 1588 + PRP + CyberSentry UR Lvl 1 + In-zone TX protection + IEC 61850 + PMU + 61850-90-5
	ND	IEC 60870-5-103 + IEC 61850 + PMU + 61850-90-5

L90	- *	**	- *	*	- F	**	- H	**	- L	**	- N	**	- R	**	Reduced Size Vertical Mount
	NE														IEC 60870-5-103 + IEC 61850 + Breaker and Half + PMU + 61850-90-5
	NH														IEC 60870-5-103 + In-zone TX protection + IEC 61850 + PMU + 61850-90-5
	NJ														IEEE 1588 + PRP + IEC 60870-5-103 + IEC 61850 + PMU + 61850-90-5
	NK														IEEE 1588 + PRP + IEC 60870-5-103 + IEC 61850 + Breaker and Half + PMU + 61850-90-5
	NN														IEEE 1588 + PRP + IEC 60870-5-103 + In-zone TX protection + IEC 61850 + PMU + 61850-90-5
	NP														IEC 60870-5-103 + IEEE 1588 + PRP + CyberSentry UR Lvl 1 + IEC 61850 + PMU + 61850-90-5
	NQ														IEC 60870-5-103 + IEEE 1588 + PRP + CyberSentry UR Lvl 1 + IEC 61850 + Breaker and Half + PMU + 61850-90-5
	NT														IEC 60870-5-103 + IEEE 1588 + PRP + CyberSentry UR Lvl 1 + In-zone TX protection + IEC 61850 + PMU + 61850-90-5
	NV														CyberSentry UR Lvl 1 + In-zone TX + IEC 61850 + Breaker and Half + PMU + 61850-90-5
	NW														IEEE 1588 + In-zone TX + IEC 61850 + Breaker and Half + PMU + 61850-90-5
	NX														PRP + In-zone TX + IEC 61850 + Breaker and Half + PMU + 61850-90-5
	NY														IEEE 1588 + CyberSentry UR Lvl 1 + In-zone TX + IEC 61850 + Breaker and Half + PMU + 61850-90-5
	NZ														IEEE 1588 + PRP + In-zone TX + IEC 61850 + Breaker and Half + PMU + 61850-90-5
	O0														PRP + CyberSentry UR Lvl 1 + In-zone TX + IEC 61850 + Breaker and Half + PMU + 61850-90-5
	O1														IEEE 1588 + PRP + CyberSentry UR Lvl 1 + In-zone TX + IEC 61850 + Breaker and Half + PMU + 61850-90-5
	O2														IEC 60870-5-103 + IEEE 1588 + PRP + In-zone TX + IEC 61850 + Breaker and Half + PMU + 61850-90-5
	O3														IEC 60870-5-103 + IEEE 1588 + PRP + CyberSentry UR Lvl 1 + In-zone TX + IEC 61850 + Breaker and Half + PMU + 61850-90-5
MOUNT/COATING		V													Vertical (3/4 rack)
		B													Vertical (3/4 rack) with harsh environmental coating
FRONT PANEL + INTERFACE			F												English display
			D												French display
			R												Russian display
			K												Enhanced front panel with English display
			M												Enhanced front panel with French display
			Q												Enhanced front panel with Russian display
			U												Enhanced front panel with Chinese display
			L												Enhanced front panel with English display and user-programmable pushbuttons
			N												Enhanced front panel with French display and user-programmable pushbuttons
			T												Enhanced front panel with Russian display and user-programmable pushbuttons
			V												Enhanced front panel with Chinese display and user-programmable pushbuttons
			W												Enhanced front panel with Turkish display
			Y												Enhanced front panel with Turkish display and user-programmable pushbuttons
			I												Enhanced front panel with German display
			J												Enhanced front panel with German display and user-programmable pushbuttons
POWER SUPPLY				H											125 / 250 V AC/DC power supply
				L											24 to 48 V (DC only) power supply
CT/VT DSP															No module (slot L only)
(L90 with two DSPs requires a						8L				8L					Standard 4CT/4VT with enhanced diagnostics (required for PMU option)
"Breaker and half" software option)						8M				8M					Sensitive Ground 4CT/4VT with enhanced diagnostics
						8N				8N					Standard 8CT with enhanced diagnostics
						8R				8R					Sensitive Ground 8CT with enhanced diagnostics
CONTACT INPUTS/OUTPUTS							XX		XX		XX				No Module
							4A		4A		4A				4 Solid-State (no monitoring) MOSFET outputs
							4B		4B		4B				4 Solid-State (voltage with optional current) MOSFET outputs
							4C		4C		4C				4 Solid-State (current with optional voltage) MOSFET outputs
							4D		4D		4D				16 Contact inputs with Auto-Burnishing (maximum of three modules within a case)
							4L		4L		4L				14 Form-A (no monitoring) Latching outputs
							67		67		67				8 Form-A (no monitoring) outputs
							6A		6A		6A				2 Form-A (voltage with optional current) and 2 Form-C outputs, 8 contact inputs
							6B		6B		6B				2 Form-A (voltage with optional current) and 4 Form-C outputs, 4 contact inputs
							6C		6C		6C				8 Form-C outputs
							6D		6D		6D				16 Contact inputs
							6E		6E		6E				4 Form-C outputs, 8 contact inputs
							6F		6F		6F				8 Fast Form-C outputs
							6G		6G		6G				4 Form-A (voltage with optional current) outputs, 8 contact inputs
							6H		6H		6H				6 Form-A (voltage with optional current) outputs, 4 contact inputs
							6K		6K		6K				4 Form-C and 4 Fast Form-C outputs
							6L		6L		6L				2 Form-A (current with optional voltage) and 2 Form-C outputs, 8 contact inputs
							6M		6M		6M				2 Form-A (current with optional voltage) and 4 Form-C outputs, 4 contact inputs
							6N		6N		6N				4 Form-A (current with optional voltage) outputs, 8 contact inputs
							6P		6P		6P				6 Form-A (current with optional voltage) outputs, 4 contact inputs
							6R		6R		6R				2 Form-A (no monitoring) and 2 Form-C outputs, 8 contact inputs
							6S		6S		6S				2 Form-A (no monitoring) and 4 Form-C outputs, 4 contact inputs
							6T		6T		6T				4 Form-A (no monitoring) outputs, 8 contact inputs
							6U		6U		6U				6 Form-A (no monitoring) outputs, 4 contact inputs
							6V		6V		6V				2 Form-A outputs, 1 Form-C output, 2 Form-A (no monitoring) latching outputs, 8 contact inputs
							6W		6W		6W				30 Contact inputs - pin terminals (max 4 modules)
							6X		6X		6X				18 Form-A (no monitoring) outputs - pin terminals (max 4 modules)
TRANSDUCER INPUTS/OUTPUTS							5A		5A		5A				4 DCmA inputs, 4 DCmA outputs (only one 5A or 5D module is allowed)
(select a maximum of 3 per unit)							5C		5C		5C				8 RTD inputs
							5D		5D		5D				4 RTD inputs, 4 DCmA outputs (only one 5A or 5D module is allowed)
							5E		5E		5E				4 RTD inputs, 4 DCmA inputs
							5F		5F		5F				8 DCmA inputs
INTER-RELAY COMMUNICATIONS														2A	C37.94SM, 1300 nm single-mode, ELED, 1 channel single-mode
(select a maximum of 1 per unit)														2B	C37.94SM, 1300 nm single-mode, ELED, 2 channel single-mode
														2I	Channel 1 - IEEE C37.94, MM, 64/128 kbps; Channel 2 - 1300 nm, single-mode, Laser
														2J	Channel 1 - IEEE C37.94, MM, 64/128 kbps; Channel 2 - 1550 nm, single-mode, Laser
														72	1550 nm, single-mode, Laser, 1 Channel
														73	1550 nm, single-mode, Laser, 2 Channel
														76	IEEE C37.94, 820 nm, 64 kbps, multimode, LED, 1 Channel
														77	IEEE C37.94, 820 nm, 64 kbps, multimode, LED, 2 Channels
														7A	820 nm, multimode, LED, 1 Channel
														7B	1300 nm, multimode, LED, 1 Channel
														7C	1300 nm, single-mode, ELED, 1 Channel
														7D	1300 nm, single-mode, Laser, 1 Channel
														7F	Channel 1 - G.703; Channel 2 - 1300 nm, multimode
														7G	Channel 1 - G.703; Channel 2 - 1300 nm, single-mode ELED
														7H	820 nm, multimode, LED, 2 Channels
														7I	1300 nm, multimode, LED, 2 Channels
														7J	1300 nm, single-mode, ELED, 2 Channels
														7K	1300 nm, single-mode, Laser, 2 Channels
														7M	Channel 1 - RS422; Channel 2 - 1300 nm, multimode, LED
														7N	Channel 1 - RS422; Channel 2 - 1300 nm, single-mode, ELED
														7P	Channel 1 - RS422; Channel 2 - 1300 nm, single-mode, Laser
														7Q	Channel 1 - G.703; Channel 2 - 1300 nm, single-mode Laser
														7R	G.703, 1 Channel

L90 - * ** - * * * - F ** - H ** - L ** - N ** - R **		Reduced Size Vertical Mount
	7S	G.703, 2 Channels
	7T	RS422, 1 Channel
	7V	RS422, 2 Channels, 2 Clock Inputs
	7W	RS422, 2 Channels

2.4.2 Order codes with process bus modules

2

Table 2-6: L90 order codes for horizontal units with process bus

	L90 - * ** - * * * - F ** - H ** - L ** - N ** - S ** - W/X **		Full Size Horizontal Mount
BASE UNIT	L90		Base Unit
CPU	T		RS485 and Three Multi-mode fiber 100Base-FX (SFP with LC)
	U		RS485 and Two Multi-mode fiber 100Base-FX (SFP with LC), One 10/100Base-TX (SFP with RJ45)
	V		RS485 and Three 10/100Base-TX (SFP with RJ45)
	W		RS485 with Two 100Base-FX Ethernet, multimode ST + 10/100Base-TX Ethernet, RJ-45
SOFTWARE OPTIONS		00	No software options
		02	Breaker-and-a-half software
		03	IEC 61850 communications
		05	Breaker-and-a-half software and IEC 61850 communications
		06	Phasor measurement unit (PMU)
		07	IEC 61850 communications and PMU
		08	Breaker-and-a-Half and PMU
		09	Breaker-and-a-Half, IEC 61850 communications, and PMU
		24	In-zone transformer protection
		25	In-zone transformer protection and IEC 61850
		26	In-zone transformer protection and PMU
		27	In-zone transformer protection, IEC 61850, and PMU
		80	In-zone transformer and Breaker-and-a-half
		81	In-zone transformer, IEC 61850, and Breaker-and-a-half
		82	In-zone transformer, Breaker-and-a-half, and PMU
		83	In-zone transformer, IEC 61850, Breaker-and-a-half, and PMU
		A0	CyberSentry Lvl 1
		A2	CyberSentry Lvl 1 and Breaker-and-a-half
		A3	CyberSentry Lvl 1 and IEC 61850
		A5	CyberSentry Lvl 1, IEC 61850, and Breaker-and-a-half
		A6	CyberSentry Lvl 1 and PMU
		A7	CyberSentry Lvl 1, IEC 61850, and PMU
		A8	CyberSentry Lvl 1, PMU, and Breaker-and-a-half
		A9	CyberSentry Lvl 1, IEC 61850, PMU, and Breaker-and-a-half
		AO	CyberSentry Lvl 1 and In-zone transformer protection
		AP	CyberSentry Lvl 1, IEC 61850, and In-zone transformer protection
		AQ	CyberSentry Lvl 1, PMU, and In-zone transformer protection
		AR	CyberSentry Lvl 1, IEC 61850, PMU, and In-zone transformer protection
		B0	IEEE 1588
		B2	IEEE 1588 and Breaker-and-a-half
		B3	IEEE 1588 and IEC 61850
		B5	IEEE 1588 and IEC 61850 and Breaker-and-a-half
		B6	IEEE 1588 and PMU
		B7	IEEE 1588, IEC 61850, and PMU
		B8	IEEE 1588, PMU, and Breaker-and-a-half
		B9	IEEE 1588, IEC 61850, PMU, and Breaker-and-a-half
		D0	IEEE 1588 and CyberSentry Lvl 1
		BO	IEEE 1588 and In-zone transformer protection
		BP	IEEE 1588, IEC 61850, and In-zone transformer protection
		BQ	IEEE 1588, PMU, and In-zone transformer protection
		BR	IEEE 1588, IEC 61850, PMU, and In-zone transformer protection
		C0	Parallel Redundancy Protocol (PRP)
		C2	PRP and Breaker-and-a-half
		C3	PRP and IEC 61850
		C5	PRP, IEC 61850, and Breaker-and-a-half
		C6	PRP and PMU
		C7	PRP, IEC 61850, and PMU
		C8	PRP, Breaker-and-a-half, and PMU
		C9	PRP, IEC 61850, Breaker-and-a-half, and PMU
		CO	PRP and In-zone transformer protection
		CP	PRP, In-zone transformer protection, and IEC 61850
		CQ	PRP, In-zone transformer protection, and PMU
		CR	PRP, In-zone transformer protection, IEC 61850, and PMU
		D0	IEEE 1588 and CyberSentry Lvl 1
		D2	IEEE 1588, CyberSentry Lvl 1, and Breaker-and-a-half
		D3	IEEE 1588, CyberSentry Lvl 1, and IEC 61850
		D5	IEEE 1588, CyberSentry Lvl 1, IEC 61850, and Breaker-and-a-half
		D6	IEEE 1588, CyberSentry Lvl 1, and PMU
		D7	IEEE 1588, CyberSentry Lvl 1, IEC 61850, and PMU
		D8	IEEE 1588, CyberSentry Lvl 1, Breaker-and-a-half, and PMU
		D9	IEEE 1588, CyberSentry Lvl 1, IEC 61850, Breaker-and-a-half, and PMU
		DO	IEEE 1588, CyberSentry Lvl 1, and In-zone transformer protection
		DP	IEEE 1588, CyberSentry Lvl 1, IEC 61850, and In-zone transformer protection
		DQ	IEEE 1588, CyberSentry Lvl 1, PMU, and In-zone transformer protection
		DR	IEEE 1588, CyberSentry Lvl 1, IEC 61850, PMU, and In-zone transformer protection
		E0	IEEE 1588 and PRP
		E2	IEEE 1588, PRP, and Breaker-and-a-half
		E3	IEEE 1588, PRP, and IEC 61850
		E5	IEEE 1588, PRP, IEC 61850, and Breaker-and-a-half
		E6	IEEE 1588, PRP, and PMU
		E7	IEEE 1588, PRP, IEC 61850, and PMU
		E8	IEEE 1588, PRP, Breaker-and-a-half, and PMU
		E9	IEEE 1588, PRP, IEC 61850, Breaker-and-a-half, and PMU
		EO	IEEE 1588, PRP, and In-zone transformer protection
		EP	IEEE 1588, PRP, In-zone transformer protection, and IEC 61850
		EQ	IEEE 1588, PRP, In-zone transformer protection, and PMU
		ER	IEEE 1588, PRP, In-zone transformer protection, IEC 61850, and PMU
		F0	PRP and CyberSentry Lvl 1
		F2	PRP, CyberSentry Lvl 1, and Breaker-and-a-half
		F3	PRP, CyberSentry Lvl 1, and IEC 61850
		F5	PRP, CyberSentry Lvl 1, IEC 61850, and Breaker-and-a-half
		F6	PRP, CyberSentry Lvl 1, and PMU
		F7	PRP, CyberSentry Lvl 1, IEC 61850, and PMU

	L90 - * ** - * * * - F ** - H ** - L ** - N ** - S ** - W/X **		Full Size Horizontal Mount
BASE UNIT	L90		Base Unit
		F8	PRP, CyberSentry Lvl 1, Breaker-and-a-half, and PMU
		F9	PRP, CyberSentry Lvl 1, IEC 61850, Breaker-and-a-half, and PMU
		FO	PRP, CyberSentry Lvl 1,In-zone transformer protection
		FP	PRP, CyberSentry Lvl 1,In-zone transformer protection, and IEC 61850
		FQ	PRP, CyberSentry Lvl 1, In-zone transformer protection, and PMU
		FR	PRP, CyberSentry Lvl 1, In-zone transformer protection, IEC 61850, and PMU
		G0	IEEE 1588, PRP, and CyberSentry Lvl 1
		G2	IEEE 1588, PRP, CyberSentry Lvl 1, and Breaker-and-a-half
		G3	IEEE 1588, PRP, CyberSentry Lvl 1, and IEC 61850
		G5	IEEE 1588, PRP, CyberSentry LVl 1, IEC 61850, and Breaker-and-a-half
		G6	IEEE 1588, PRP, CyberSentry Lvl 1, and PMU
		G7	IEEE 1588, PRP, CyberSentry Lvl 1, IEC 61850, and PMU
		G8	IEEE 1588, PRP, CyberSentry Lvl 1, Breaker-and-a-half, and PMU
		G9	IEEE 1588, PRP, CyberSentry Lvl 1, IEC 16850, Breaker-and-a-half, and PMU
		GO	IEEE 1588, PRP, CyberSentry Lvl 1, In-zone transformer protection
		GP	IEEE 1588 PRP, CyberSentry Lvl 1, In-zone transformer protection, and IEC 61850
		GQ	IEEE 1588, PRP, CyberSentry Lvl 1, In-zone transformer protection, and PMU
		GR	IEEE 1588, PRP, CyberSentry Lvl 1, In-zone transformer protection, IEC 61850, and PMU
		H0	CyberSentry Lvl 1, In-zone transformer protection, and Breaker-and-a-half
		H1	CyberSentry Lvl 1, In-zone transformer protection, IEC 61850, and Breaker-and-a-half
		H2	CyberSentry Lvl 1, In-zone transformer protection, Breaker-and-a-half, and PMU
		H3	CyberSentry Lvl 1, In-zone transformer protection, IEC 61850, Breaker-and-a-half, and PMU
		H4	IEEE 1588, In-zone transformer protection, and Breaker-and-a-half
		H5	IEEE 1588, In-zone transformer protection, IEC 6850, and Breaker-and-a-half
		H6	IEEE 1588, In-zone transformer protection, Breaker-and-a-half, and PMU
		H7	IEEE 1588, In-zone transformer protection, IEC 61850, Breaker-and-a-half, and PMU
		H8	PRP, In-zone transformer protection, and Breaker-and-a-half
		H9	PRP, In-zone transformer protection, IEC 61850, and Breaker-and-a-half
		HA	PRP, In-zone transformer protection, Breaker-and-a-half, and PMU
		HB	PRP, In-zone transformer protection, IEC 61850, Breaker-and-a-half, and PMU
		HC	IEEE 1588, CyberSentry Lvl 1, In-zone transformer protection, and Breaker-and-a-half
		HD	IEEE 1588, CyberSentry Lvl 1, In-zone transformer protection, IEC 61850, and Breaker-and-a-half
		HE	IEEE 1588, CyberSentry Lvl 1, In-zone transformer protection, Breaker-and-a-half, and PMU
		HF	IEEE 1588, CyberSentry Lvl 1, In-zone transformer protection, IEC 61580, Breaker-and-a-half, PMU
		HG	IEEE 1588, PRP, In-zone transformer protection, and Breaker-and-a-half
		HH	IEEE 1588, PRP, In-zone transformer protection, IEC 61850, and Breaker-and-a-half
		HI	IEEE 1588, PRP, In-zone transformer protection, Breaker-and-a-half, and PMU
		HJ	IEEE 1588, PRP, In-zone transformer protection, IE 61850, Breaker-and-a-half, and PMU
		HK	PRP, CyberSentry Lvl 1, In-zone transformer protection, and Breaker-and-a-half
		HL	PRP, CyberSentry Lvl 1, In-zone transformer protection, IEC 61850, and Breaker-and-a-half
		HM	PRP, CyberSentry Lvl 1, In-zone transformer protection, Breaker-and-a-half, and PMU
		HN	PRP, CyberSentry Lvl 1, In-zone transformer protection, IEC 61850, Breaker-and-a-half, and PMU
		HO	IEEE 1588, PRP, CyberSentry Lvl 1, In-zone transformer protection, Breaker-and-a-half
		HP	IEEE 1588, PRP, CyberSentry Lvl 1, In-zone transformer protection, IEC 61850, Breaker-and-a-half
		HQ	IEEE 1588, PRP, CyberSentry Lvl 1, In-zone transformer protection, breaker-and-a-hal, and PMU
		HR	IEEE 1588, PRP, CyberSentry Lvl 1, In-zone Tx protection, IEC 61850, breaker-and-a half, and PMU
		HS	IEC 60870-5-103 + IEEE 1588 + PRP + In-zone transformer protection + Breaker-and-a-half
		HT	IEC 60870-5-103 + IEEE 1588 + PRP + In-zone Tx protection + IEC 61850 + Breaker-and-a-half
		HU	IEC 60870-5-103 + IEEE 1588 + PRP + In-zone transformer protection + Breaker-and-a-half + PMU
		HV	IEC 60870-5-103 + IEEE 1588 + PRP + In-zone transformer protection + IEC 61850 + Breaker-and-a-half + PMU
		HW	IEC 60870-5-103 + IEEE 1588 + PRP + CyberSentry Lvl 1 + In-zone transformer protection + Breaker-and-a-half
		HX	IEC 60870-5-103 + IEEE 1588 + PRP + CyberSentry Lvl 1 + In-zone transformer protection + IEC 61850 + Breaker-and-a-half
		HY	IEC 60870-5-103 + IEEE 1588 + PRP + CyberSentry Lvl 1 + In-zone transformer protection + Breaker-and-a-half + PMU
		HZ	IEC 60870-5-103 + IEEE 1588 + PRP + CyberSentry Lvl 1 + In-zone transformer protection + IEC 61850 + PMU
		J0	IEC 60870-5-103
		J2	IEC 60870-5-103 + Breaker-and-a-half
		J3	IEC 60870-5-103 + IEC 61850
		J5	IEC 60870-5-103 + IEC 61850 + Breaker-and-a-half
		J6	IEC 60870-5-103 + PMU
		J7	IEC 60870-5-103 + IEC 61850 + PMU
		J8	IEC 60870-5-103 + Breaker-and-a-half + PMU
		J9	IEC 60870-5-103 + IEC 61850 + Breaker-and-a-half + PMU
		JO	IEC 60870-5-103 + In-zone transformer protection
		JP	IEC 60870-5-103 + In-zone transformer protection + IEC 61850
		JQ	IEC 60870-5-103 + In-zone transformer protection + PMU
		JR	IEC 60870-5-103 + In-zone transformer protection + IEC 61850 + PMU
		K0	IEEE 1588 + PRP + IEC60870-5-103
		K2	IEEE 1588 + PRP + IEC60870-5-103 + Breaker-and-a-half
		K3	IEEE 1588 + PRP + IEC60870-5-103 + IEC 61850
		K5	IEEE 1588 + PRP + IEC60870-5-103 + IEC 61850 + Breaker-and-a-half
		K6	IEEE 1588 + PRP + IEC60870-5-103 + PMU
		K7	IEEE 1588 + PRP + IEC60870-5-103 + IEC 61850 + PMU
		K8	IEEE 1588 + PRP + IEC60870-5-103 + Breaker-and-a-half + PMU
		K9	IEEE 1588 + PRP + IEC60870-5-103 + IEC 61850 + Breaker-and-a-half + PMU
		KO	IEEE 1588 + PRP + IEC60870-5-103 + In-zone transformer protection
		KP	IEEE 1588 + PRP + IEC60870-5-103 + In-zone transformer protection + IEC 61850
		KQ	IEEE 1588 + PRP + IEC60870-5-103 + In-zone transformer protection + PMU
		KR	IEEE 1588 + PRP + IEC60870-5-103 + In-zone transformer protection + IEC 61850 + PMU
		L0	IEC60870-5-103 + IEEE 1588 + PRP + CyberSentry Lvl 1
		L2	IEC60870-5-103 + IEEE 1588 + PRP + CyberSentry Lvl 1 + Breaker-and-a-half
		L3	IEC60870-5-103 + IEEE 1588 + PRP + CyberSentry Lvl 1 + IEC 61850
		L5	IEC60870-5-103 + IEEE 1588 + PRP + CyberSentry Lvl 1 + IEC 61850 + Breaker-and-a-half
		L6	IEC60870-5-103 + IEEE 1588 + PRP + CyberSentry Lvl 1 + PMU
		L7	IEC60870-5-103 + IEEE 1588 + PRP + CyberSentry Lvl 1 + IEC 61850 + PMU
		L8	IEC60870-5-103 + IEEE 1588 + PRP + CyberSentry Lvl 1 + Breaker-and-a-half + PMU

2

	L90 - * ** - * * * - F ** - H ** - L ** - N ** - S ** - W/X **	Full Size Horizontal Mount
BASE UNIT	L90	Base Unit
	L9	IEC60870-5-103 + IEEE 1588 + PRP + CyberSentry Lvl 1 + IEC 61850 + Breaker-and-a-half + PMU
	LO	IEC60870-5-103 + IEEE 1588 + PRP + CyberSentry Lvl 1 + In-zone transformer protection
	LP	IEC60870-5-103 + IEEE 1588 + PRP + CyberSentry Lvl 1 + In-zone transformer protection + IEC 61850
	LQ	IEC60870-5-103 + IEEE 1588 + PRP + CyberSentry Lvl 1 + In-zone transformer protection + PMU
	LR	IEC60870-5-103 + IEEE 1588 + PRP + CyberSentry Lvl 1 + In-zone transformer protection + IEC 61850 + PMU
	M0	IEC 61850 + PMU + 61850-90-5
	M1	IEC 61850 + Breaker and Half + PMU + 61850-90-5
	M4	In-zone TX protection + IEC 61850 + PMU + 61850-90-5
	M6	In-zone TX + IEC 61850 + Breaker and Half + PMU + 61850-90-5
	M7	CyberSentry UR Lvl 1 + IEC 61850 + PMU + 61850-90-5
	M8	CyberSentry UR Lvl 1 + IEC 61850 + Breaker and Half + PMU + 61850-90-5
	MB	CyberSentry UR Lvl 1 + In-zone TX protection + IEC 61850 + PMU + 61850-90-5
	MD	IEEE 1588 + IEC 61850 + PMU + 61850-90-5
	ME	IEEE 1588 + IEC 61850 + Breaker and Half + PMU + 61850-90-5
	MH	IEEE 1588 + In-zone TX protection + IEC 61850 + PMU + 61850-90-5
	MJ	PRP + IEC 61850 + PMU + 61850-90-5
	MK	PRP + IEC 61850 + Breaker and Half + PMU + 61850-90-5
	MN	PRP + In-zone TX protection + IEC 61850 + PMU + 61850-90-5
	MP	IEEE 1588 + CyberSentry UR Lvl 1 + IEC 61850 + PMU + 61850-90-5
	MQ	IEEE 1588 + CyberSentry UR Lvl 1 + IEC 61850 + Breaker and Half + PMU + 61850-90-5
	MT	IEEE 1588 + CyberSentry UR Lvl 1 + In-zone TX protection + IEC 61850 + PMU + 61850-90-5
	MV	IEEE 1588 + PRP + IEC 61850 + PMU + 61850-90-5
	MW	IEEE 1588 + PRP + IEC 61850 + Breaker and Half + PMU + 61850-90-5
	MZ	IEEE 1588 + PRP + In-zone TX protection + IEC 61850 + PMU + 61850-90-5
	N1	PRP + CyberSentry UR Lvl 1 + IEC 61850 + PMU + 61850-90-5
	N2	PRP + CyberSentry UR Lvl 1 + IEC 61850 + Breaker and Half + PMU + 61850-90-5
	N5	PRP + CyberSentry UR Lvl 1 + In-zone TX protection + IEC 61850 + PMU + 61850-90-5
	N7	IEEE 1588 + PRP + CyberSentry UR Lvl 1 + IEC 61850 + PMU + 61850-90-5
	N8	IEEE 1588 + PRP + CyberSentry UR Lvl 1 + IEC 61850 + Breaker and Half + PMU + 61850-90-5
	NB	IEEE 1588 + PRP + CyberSentry UR Lvl 1 + In-zone TX protection + IEC 61850 + PMU + 61850-90-5
	ND	IEC 60870-5-103 + IEC 61850 + PMU + 61850-90-5
	NE	IEC 60870-5-103 + IEC 61850 + Breaker and Half + PMU + 61850-90-5
	NH	IEC 60870-5-103 + In-zone TX protection + IEC 61850 + PMU + 61850-90-5
	NJ	IEEE 1588 + PRP + IEC 60870-5-103 + IEC 61850 + PMU + 61850-90-5
	NK	IEEE 1588 + PRP + IEC 60870-5-103 + IEC 61850 + Breaker and Half + PMU + 61850-90-5
	NN	IEEE 1588 + PRP + IEC 60870-5-103 + In-zone TX protection + IEC 61850 + PMU + 61850-90-5
	NP	IEC 60870-5-103 + IEEE 1588 + PRP + CyberSentry UR Lvl 1 + IEC 61850 + PMU + 61850-90-5
	NQ	IEC 60870-5-103 + IEEE 1588 + PRP + CyberSentry UR Lvl 1 + IEC 61850 + Breaker and Half + PMU + 61850-90-5
	NT	IEC 60870-5-103 + IEEE 1588 + PRP + CyberSentry UR Lvl 1 + In-zone TX protection + IEC 61850 + PMU + 61850-90-5
	NV	CyberSentry UR Lvl 1 + In-zone TX + IEC 61850 + Breaker and Half + PMU + 61850-90-5
	NW	IEEE 1588 + In-zone TX + IEC 61850 + Breaker and Half + PMU + 61850-90-5
	NX	PRP + In-zone TX + IEC 61850 + Breaker and Half + PMU + 61850-90-5
	NY	IEEE 1588 + CyberSentry UR Lvl 1 + In-zone TX + IEC 61850 + Breaker and Half + PMU + 61850-90-5
	NZ	IEEE 1588 + PRP + In-zone TX + IEC 61850 + Breaker and Half + PMU + 61850-90-5
	O0	PRP + CyberSentry UR Lvl 1 + In-zone TX + IEC 61850 + Breaker and Half + PMU + 61850-90-5
	O1	IEEE 1588 + PRP + CyberSentry UR Lvl 1 + In-zone TX + IEC 61850 + Breaker and Half + PMU + 61850-90-5
	O2	IEC 60870-5-103 + IEEE 1588 + PRP + In-zone TX + IEC 61850 + Breaker and Half + PMU + 61850-90-5
	O3	IEC 60870-5-103 + IEEE 1588 + PRP + CyberSentry UR Lvl 1 + In-zone TX + IEC 61850 + Breaker and Half + PMU + 61850-90-5
MOUNT/COATING	H	Horizontal (19" rack)
	A	Horizontal (19" rack) with harsh environmental coating
FRONT PANEL + INTERFACE	C	English display
	D	French display
	R	Russian display
	P	English display with 4 small and 12 large programmable pushbuttons
	G	French display with 4 small and 12 large programmable pushbuttons
	S	Russian display with 4 small and 12 large programmable pushbuttons
	K	Enhanced front panel with English display
	M	Enhanced front panel with French display
	Q	Enhanced front panel with Russian display
	U	Enhanced front panel with Chinese display
	L	Enhanced front panel with English display and user-programmable pushbuttons
	N	Enhanced front panel with French display and user-programmable pushbuttons
	T	Enhanced front panel with Russian display and user-programmable pushbuttons
	V	Enhanced front panel with Chinese display and user-programmable pushbuttons
	W	Enhanced front panel with Turkish display
	Y	Enhanced front panel with Turkish display and user-programmable pushbuttons
	I	Enhanced front panel with German display
	J	Enhanced front panel with German display and user-programmable pushbuttons
	H	Enhanced front panel with Polish display
	O	Enhanced front panel with Polish display and user-programmable pushbuttons
	E	7" Graphical front panel display in multiple languages with USB front port and programmable pushbuttons (English, French, Chinese, Russian, Turkish, German, Polish, Japanese)

	L90 - * ** - * * * - F ** - H ** - L ** - N ** - S ** - W/X **	Full Size Horizontal Mount
BASE UNIT	L90	Base Unit
POWER SUPPLY (redundant supply must be same type as main supply)	H	125 / 250 V AC/DC power supply
	H	RH 125 / 250 V AC/DC with redundant 125 / 250 V AC/DC power supply
	L	24 to 48 V (DC only) power supply
	L	RL 24 to 48 V (DC only) with redundant 24 to 48 V DC power supply
PROCESS BUS MODULE	81	Eight-port digital process bus module
CONTACT INPUTS/OUTPUTS	XX XX XX XX	XX No Module
	4A 4A	4 Solid-State (no monitoring) MOSFET outputs
	4B 4B	4 Solid-State (voltage with optional current) MOSFET outputs
	4C 4C	4 Solid-State (current with optional voltage) MOSFET outputs
	4D 4D	16 Contact inputs with Auto-Burnishing (maximum of three modules within a case)
	4L 4L	14 Form-A (no monitoring) Latching outputs
	67 67	8 Form-A (no monitoring) outputs
	6A 6A	2 Form-A (voltage with optional current) and 2 Form-C outputs, 8 contact inputs
	6B 6B	2 Form-A (voltage with optional current) and 4 Form-C outputs, 4 contact inputs
	6C 6C	8 Form-C outputs
	6D 6D	16 Contact inputs
	6E 6E	4 Form-C outputs, 8 contact inputs
	6F 6F	8 Fast Form-C outputs
	6G 6G	4 Form-A (voltage with optional current) outputs, 8 contact inputs
	6H 6H	6 Form-A (voltage with optional current) outputs, 4 contact inputs
	6K 6K	4 Form-C and 4 Fast Form-C outputs
	6L 6L	2 Form-A (current with optional voltage) and 2 Form-C outputs, 8 contact inputs
	6M 6M	2 Form-A (current with optional voltage) and 4 Form-C outputs, 4 contact inputs
	6N 6N	4 Form-A (current with optional voltage) outputs, 8 contact inputs
	6P 6P	6 Form-A (current with optional voltage) outputs, 4 contact inputs
	6R 6R	2 Form-A (no monitoring) and 2 Form-C outputs, 8 contact inputs
	6S 6S	2 Form-A (no monitoring) and 4 Form-C outputs, 4 contact inputs
	6T 6T	4 Form-A (no monitoring) outputs, 8 contact inputs
	6U 6U	6 Form-A (no monitoring) outputs, 4 contact inputs
	6V 6V	2 Form-A outputs, 1 Form-C output, 2 Form-A (no monitoring) latching outputs, 8 contact inputs
	6W 6W	30 Contact inputs - pin terminals (max 4 modules)
	6X 6X	18 Form-A (no monitoring) outputs - pin terminals (max 4 modules)
INTER-RELAY COMMUNICATIONS (select a maximum of 1 per unit)		2A C37.94SM, 1300 nm single-mode, ELED, 1 channel single-mode
		2B C37.94SM, 1300 nm single-mode, ELED, 2 channel single-mode
		2I Channel 1 - IEEE C37.94, MM, 64/128 kbps; Channel 2 - 1300 nm, single-mode, Laser
		2J Channel 1 - IEEE C37.94, MM, 64/128 kbps; Channel 2 - 1550 nm, single-mode, Laser
		72 1550 nm, single-mode, Laser, 1 Channel
		73 1550 nm, single-mode, Laser, 2 Channel
		76 IEEE C37.94, 820 nm, 64 kbps, multimode, LED, 1 Channel
		77 IEEE C37.94, 820 nm, 64 kbps, multimode, LED, 2 Channels
		7A 820 nm, multimode, LED, 1 Channel
		7B 1300 nm, multimode, LED, 1 Channel
		7C 1300 nm, single-mode, ELED, 1 Channel
		7D 1300 nm, single-mode, Laser, 1 Channel
		7F Channel 1 - G.703; Channel 2 - 1300 nm, multimode
		7G Channel 1 - G.703; Channel 2 - 1300 nm, single-mode ELED
		7H 820 nm, multimode, LED, 2 Channels
		7I 1300 nm, multimode, LED, 2 Channels
		7J 1300 nm, single-mode, ELED, 2 Channels
		7K 1300 nm, single-mode, LASER, 2 Channels
		7M Channel 1 - RS422; Channel 2 - 1300 nm, multimode, LED
		7N Channel 1 - RS422; Channel 2 - 1300 nm, single-mode, ELED
		7P Channel 1 - RS422; Channel 2 - 1300 nm, single-mode, Laser
		7Q Channel 1 - G.703; Channel 2 - 1300 nm, single-mode Laser
		7R G.703, 1 Channel
		7S G.703, 2 Channels
		7T RS422, 1 Channel
		7V RS422, 2 Channels, 2 Clock Inputs
		7W RS422, 2 Channels

Table 2-7: L90 order codes for reduced-size vertical units with process bus

	L90 - * ** - * * * - F ** - H ** - L ** - N ** - R **	Reduced Size Vertical Mount
BASE UNIT	L90	Base Unit
CPU	T	RS485 and Three Multi-mode fiber 100Base-FX (SFP with LC)
	U	RS485 and Two Multi-mode fiber 100Base-FX (SFP with LC), One 10/100Base-TX (SFP with RJ45)
	V	RS485 and Three 10/100Base-TX (SFP with RJ45)
	W	RS485 with Two 100Base-FX Ethernet, multimode ST + 10/100Base-TX Ethernet, RJ-45
SOFTWARE OPTIONS	00	No software options
	02	Breaker-and-a-half software
	03	IEC 61850 communications
	05	Breaker-and-a-half software and IEC 61850 communications
	06	Phasor measurement unit (PMU)
	07	IEC 61850 communications and PMU
	08	Breaker-and-a-Half and PMU
	09	Breaker-and-a-Half, IEC 61850 communications, and PMU
	24	In-zone transformer protection
	25	In-zone transformer protection and IEC 61850
	26	In-zone transformer protection and PMU
	27	In-zone transformer protection, IEC 61850, and PMU
	80	In-zone transformer and Breaker-and-a-half
	81	In-zone transformer, IEC 61850, and Breaker-and-a-half
	82	In-zone transformer, Breaker-and-a-half, and PMU
	83	In-zone transformer, IEC 61850, Breaker-and-a-half, and PMU
	A0	CyberSentry Lvl 1
	A2	CyberSentry Lvl 1 and Breaker-and-a-half
	A3	CyberSentry Lvl 1 and IEC 61850
	A5	CyberSentry Lvl 1, IEC 61850, and Breaker-and-a-half
	A6	CyberSentry Lvl 1 and PMU
	A7	CyberSentry Lvl 1, IEC 61850, and PMU
	A8	CyberSentry Lvl 1, PMU, and Breaker-and-a-half
	A9	CyberSentry Lvl 1, IEC 61850, PMU, and Breaker-and-a-half
	AO	CyberSentry Lvl 1 and In-zone transformer protection
	AP	CyberSentry Lvl 1, IEC 61850, and In-zone transformer protection
	AQ	CyberSentry Lvl 1, PMU, and In-zone transformer protection
	AR	CyberSentry Lvl 1, IEC 61850, PMU, and In-zone transformer protection
	B0	IEEE 1588
	B2	IEEE 1588 and Breaker-and-a-half

2

L90 - * ** - * * * - F ** - H ** - L ** - N ** - R **	Reduced Size Vertical Mount
B3	IEEE 1588 and IEC 61850
B5	IEEE 1588, IEC 61850, and Breaker-and-a-half
B6	IEEE 1588 and PMU
B7	IEEE 1588, IEC 61850, and PMU
B8	IEEE 1588, PMU, and Breaker-and-a-half
B9	IEEE 1588, IEC 61850, PMU, and Breaker-and-a-half
BO	IEEE 1588 and In-zone transformer protection
BP	IEEE 1588, IEC 61850, and In-zone transformer protection
BQ	IEEE 1588, PMU, and In-zone transformer protection
BR	IEEE 1588, IEC 61850, PMU, and In-zone transformer protection
C0	Parallel Redundancy Protocol (PRP)
C2	PRP and Breaker-and-a-half
C3	PRP and IEC 61850
C5	PRP, IEC 61850, and Breaker-and-a-half
C6	PRP and PMU
C7	PRP, IEC 61850, and PMU
C8	PRP, Breaker-and-a-half, and PMU
C9	PRP, IEC 61850, Breaker-and-a-half, and PMU
CO	PRP and In-zone transformer protection
CP	PRP, In-zone transformer protection, and IEC 61850
CQ	PRP, In-zone transformer protection, and PMU
CR	PRP, In-zone transformer protection, IEC 61850, and PMU
D0	IEEE 1588 and CyberSentry Lvl 1
D2	IEEE 1588, CyberSentry Lvl 1, and IEC 61850
D3	IEEE 1588, CyberSentry Lvl 1, and IEC 61850
D5	IEEE 1588, CyberSentry Lvl 1, and IEC 61850
D6	IEEE 1588, CyberSentry Lvl 1, and PMU
D7	IEEE 1588, CyberSentry Lvl 1, IEC 61850, and PMU
D8	IEEE 1588, CyberSentry Lvl 1, IEC 61850, and PMU
D9	IEEE 1588, CyberSentry Lvl 1, IEC 61850, PMU, and Breaker-and-a-half
DO	IEEE 1588, CyberSentry Lvl 1, and In-zone transformer protection
DP	IEEE 1588, CyberSentry Lvl 1, IEC 61850, and In-zone transformer protection
DQ	IEEE 1588, CyberSentry Lvl 1, PMU, and In-zone transformer protection
DR	IEEE 1588, CyberSentry Lvl 1, IEC 61850, PMU, and In-zone transformer protection
E0	IEEE 1588 and PRP
E2	IEEE 1588, PRP, and Breaker-and-a-half
E3	IEEE 1588, PRP, and IEC 61850
E5	IEEE 1588, PRP, IEC 61850, and Breaker-and-a-half
E6	IEEE 1588, PRP, and PMU
E7	IEEE 1588, PRP, IEC 61850, and PMU
E8	IEEE 1588, PRP, Breaker-and-a-half, and PMU
E9	IEEE 1588, PRP, IEC 61850, Breaker-and-a-half, and PMU
EO	IEEE 1588, PRP, and In-zone transformer protection
EP	IEEE 1588, PRP, In-zone transformer protection, and IEC 61850
EQ	IEEE 1588, PRP, In-zone transformer protection, and PMU
ER	IEEE 1588, PRP, In-zone transformer protection, IEC 61850, and PMU
F0	PRP and CyberSentry Lvl 1
F2	PRP, CyberSentry Lvl 1, and Breaker-and-a-half
F3	PRP, CyberSentry Lvl 1, and IEC 61850
F5	PRP, CyberSentry Lvl 1, IEC 61850, and Breaker-and-a-half
F6	PRP, CyberSentry Lvl 1, and PMU
F7	PRP, CyberSentry Lvl 1, IEC 61850, and PMU
F8	PRP, CyberSentry Lvl 1, Breaker-and-a-half, and PMU
F9	PRP, CyberSentry Lvl 1, IEC 61850, Breaker-and-a-half, and PMU
FO	PRP, CyberSentry Lvl 1,In-zone transformer protection
FP	PRP, CyberSentry Lvl 1,In-zone transformer protection, and IEC 61850
FQ	PRP, CyberSentry Lvl 1, In-zone transformer protection, and PMU
FR	PRP, CyberSentry Lvl 1, In-zone transformer protection, IEC 61850, and PMU
G0	IEEE 1588, PRP, and CyberSentry Lvl 1
G2	IEEE 1588, PRP, CyberSentry Lvl 1, and Breaker-and-a-half
G3	IEEE 1588, PRP, CyberSentry Lvl 1, and IEC 61850
G5	IEEE 1588, PRP, CyberSentry LVl 1, IEC 61850, and Breaker-and-a-half
G6	IEEE 1588, PRP, CyberSentry Lvl 1, and PMU
G7	IEEE 1588, PRP, CyberSentry Lvl 1, IEC 61850, and PMU
G8	IEEE 1588, PRP, CyberSentry Lvl 1, Breaker-and-a-half, and PMU
G9	IEEE 1588, PRP, CyberSentry Lvl 1, IEC 16850, Breaker-and-a-half, and PMU
GO	IEEE 1588, PRP, CyberSentry Lvl 1, In-zone transformer protection
GP	IEEE 1588 PRP, CyberSentry Lvl 1, In-zone transformer protection, and IEC 61850
GQ	IEEE 1588, PRP, CyberSentry Lvl 1, In-zone transformer protection, and PMU
GR	IEEE 1588, PRP, CyberSentry Lvl 1, In-zone transformer protection, IEC 61850, and PMU
H0	CyberSentry Lvl 1, In-zone transformer protection, and Breaker-and-a-half
H1	CyberSentry Lvl 1, In-zone transformer protection, IEC 61850, and Breaker-and-a-half
H2	CyberSentry Lvl 1, In-zone transformer protection, Breaker-and-a-half, and PMU
H3	CyberSentry Lvl 1, In-zone transformer protection, IEC 61850, Breaker-and-a-half, and PMU
H4	IEEE 1588, In-zone transformer protection, and Breaker-and-a-half
H5	IEEE 1588, In-zone transformer protection, IEC 6850, and Breaker-and-a-half
H6	IEEE 1588, In-zone transformer protection, Breaker-and-a-half, and PMU
H7	IEEE 1588, In-zone transformer protection, IEC 61850, Breaker-and-a-half, and PMU
H8	PRP, In-zone transformer protection, and Breaker-and-a-half
H9	PRP, In-zone transformer protection, IEC 61850, and Breaker-and-a-half
HA	PRP, In-zone transformer protection, Breaker-and-a-half, and PMU
HB	PRP, In-zone transformer protection, IEC 61850, Breaker-and-a-half, and PMU
HC	IEEE 1588, CyberSentry Lvl 1, In-zone transformer protection, and Breaker-and-a-half
HD	IEEE 1588, CyberSentry Lvl 1, In-zone transformer protection, IEC 61850, and Breaker-and-a-half
HE	IEEE 1588, CyberSentry Lvl 1, In-zone transformer protection, Breaker-and-a-half, and PMU
HF	IEEE 1588, CyberSentry Lvl 1, In-zone transformer protection, IEC 61580, Breaker-and-a-half, PMU
HG	IEEE 1588, PRP, In-zone transformer protection, and Breaker-and-a-half
HH	IEEE 1588, PRP, In-zone transformer protection, IEC 61850, and Breaker-and-a-half
HI	IEEE 1588, PRP, In-zone transformer protection, Breaker-and-a-half, and PMU
HJ	IEEE 1588, PRP, In-zone transformer protection, IE 61850, Breaker-and-a-half, and PMU
HK	PRP, CyberSentry Lvl 1, In-zone transformer protection, and Breaker-and-a-half
HL	PRP, CyberSentry Lvl 1, In-zone transformer protection, IEC 61850, and Breaker-and-a-half
HM	PRP, CyberSentry Lvl 1, In-zone transformer protection, Breaker-and-a-half, and PMU
HN	PRP, CyberSentry Lvl 1, In-zone transformer protection, IEC 61850, Breaker-and-a-half, and PMU
HO	IEEE 1588, PRP, CyberSentry Lvl 1, In-zone transformer protection, Breaker-and-a-half
HP	IEEE 1588, PRP, CyberSentry Lvl 1, In-zone transformer protection, IEC 61850, Breaker-and-a-half
HQ	IEEE 1588, PRP, CyberSentry Lvl 1, In-zone transformer protection, breaker-and-a-hal, and PMU
HR	IEEE 1588, PRP, CyberSentry Lvl 1, In-zone Tx protection, IEC 61850, breaker-and-a half, and PMU
HS	IEC 60870-5-103 + IEEE 1588 + PRP + In-zone transformer protection + Breaker-and-a-half
HT	IEC 60870-5-103 + IEEE 1588 + PRP + In-zone Tx protection + IEC 61850 + Breaker-and-a-half
HU	IEC 60870-5-103 + IEEE 1588 + PRP + In-zone transformer protection + Breaker-and-a-half + PMU
HV	IEC 60870-5-103 + IEEE 1588 + PRP + In-zone transformer protection + IEC 61850 + Breaker-and-a-half + PMU

L90	- *	**	- *	*	*	- F **	- H **	- L **	- N **	- R **	Reduced Size Vertical Mount
		HW	|	|	|	|	|	|	|	|	IEC 60870-5-103 + IEEE 1588 + PRP + CyberSentry Lvl 1 + In-zone transformer protection + Breaker-and-a-half
		HX	|	|	|	|	|	|	|	|	IEC 60870-5-103 + IEEE 1588 + PRP + CyberSentry Lvl 1 + In-zone transformer protection + IEC 61850 + Breaker-and-a-half
		HY	|	|	|	|	|	|	|	|	IEC 60870-5-103 + IEEE 1588 + PRP + CyberSentry Lvl 1 + In-zone transformer protection + Breaker-and-a-half + PMU
		HZ	|	|	|	|	|	|	|	|	IEC 60870-5-103 + IEEE 1588 + PRP + CyberSentry Lvl 1 + In-zone transformer protection + IEC 61850 + PMU
		J0	|	|	|	|	|	|	|	|	IEC 60870-5-103
		J2	|	|	|	|	|	|	|	|	IEC 60870-5-103 + Breaker-and-a-half
		J3	|	|	|	|	|	|	|	|	IEC 60870-5-103 + IEC 61850
		J5	|	|	|	|	|	|	|	|	IEC 60870-5-103 + IEC 61850 + Breaker-and-a-half
		J6	|	|	|	|	|	|	|	|	IEC 60870-5-103 + PMU
		J7	|	|	|	|	|	|	|	|	IEC 60870-5-103 + IEC 61850 + PMU
		J8	|	|	|	|	|	|	|	|	IEC 60870-5-103 + Breaker-and-a-half + PMU
		J9	|	|	|	|	|	|	|	|	IEC 60870-5-103 + IEC 61850 + Breaker-and-a-half + PMU
		JO	|	|	|	|	|	|	|	|	IEC 60870-5-103 + In-zone transformer protection
		JP	|	|	|	|	|	|	|	|	IEC 60870-5-103 + In-zone transformer protection + IEC 61850
		JQ	|	|	|	|	|	|	|	|	IEC 60870-5-103 + In-zone transformer protection + PMU
		JR	|	|	|	|	|	|	|	|	IEC 60870-5-103 + In-zone transformer protection + IEC 61850 + PMU
		K0	|	|	|	|	|	|	|	|	IEEE 1588 + PRP + IEC60870-5-103
		K2	|	|	|	|	|	|	|	|	IEEE 1588 + PRP + IEC60870-5-103 + Breaker-and-a-half
		K3	|	|	|	|	|	|	|	|	IEEE 1588 + PRP + IEC60870-5-103 + IEC 61850
		K5	|	|	|	|	|	|	|	|	IEEE 1588 + PRP + IEC60870-5-103 + IEC 61850 + Breaker-and-a-half
		K6	|	|	|	|	|	|	|	|	IEEE 1588 + PRP + IEC60870-5-103 + PMU
		K7	|	|	|	|	|	|	|	|	IEEE 1588 + PRP + IEC60870-5-103 + IEC 61850 + PMU
		K8	|	|	|	|	|	|	|	|	IEEE 1588 + PRP + IEC60870-5-103 + Breaker-and-a-half + PMU
		K9	|	|	|	|	|	|	|	|	IEEE 1588 + PRP + IEC60870-5-103 + IEC 61850 + Breaker-and-a-half + PMU
		KO	|	|	|	|	|	|	|	|	IEEE 1588 + PRP + IEC60870-5-103 + In-zone transformer protection
		KP	|	|	|	|	|	|	|	|	IEEE 1588 + PRP + IEC60870-5-103 + In-zone transformer protection + IEC 61850
		KQ	|	|	|	|	|	|	|	|	IEEE 1588 + PRP + IEC60870-5-103 + In-zone transformer protection + PMU
		KR	|	|	|	|	|	|	|	|	IEEE 1588 + PRP + IEC60870-5-103 + In-zone transformer protection + IEC 61850 + PMU
		L0	|	|	|	|	|	|	|	|	IEC60870-5-103 + IEEE 1588 + PRP + CyberSentry Lvl 1
		L2	|	|	|	|	|	|	|	|	IEC60870-5-103 + IEEE 1588 + PRP + CyberSentry Lvl 1 + Breaker-and-a-half
		L3	|	|	|	|	|	|	|	|	IEC60870-5-103 + IEEE 1588 + PRP + CyberSentry Lvl 1 + IEC 61850
		L5	|	|	|	|	|	|	|	|	IEC60870-5-103 + IEEE 1588 + PRP + CyberSentry Lvl 1 + IEC 61850 + Breaker-and-a-half
		L6	|	|	|	|	|	|	|	|	IEC60870-5-103 + IEEE 1588 + PRP + CyberSentry Lvl 1 + PMU
		L7	|	|	|	|	|	|	|	|	IEC60870-5-103 + IEEE 1588 + PRP + CyberSentry Lvl 1 + IEC 61850 + PMU
		L8	|	|	|	|	|	|	|	|	IEC60870-5-103 + IEEE 1588 + PRP + CyberSentry Lvl 1 + Breaker-and-a-half + PMU
		L9	|	|	|	|	|	|	|	|	IEC60870-5-103 + IEEE 1588 + PRP + CyberSentry Lvl 1 + IEC 61850 + Breaker-and-a-half + PMU
		LO	|	|	|	|	|	|	|	|	IEC60870-5-103 + IEEE 1588 + PRP + CyberSentry Lvl 1 + In-zone transformer protection
		LP	|	|	|	|	|	|	|	|	IEC60870-5-103 + IEEE 1588 + PRP + CyberSentry Lvl 1 + In-zone transformer protection + IEC 61850
		LQ	|	|	|	|	|	|	|	|	IEC60870-5-103 + IEEE 1588 + PRP + CyberSentry Lvl 1 + In-zone transformer protection + PMU
		LR	|	|	|	|	|	|	|	|	IEC60870-5-103 + IEEE 1588 + PRP + CyberSentry Lvl 1 + In-zone transformer protection + IEC 61850 + PMU
		M0	|	|	|	|	|	|	|	|	IEC 61850 + PMU + 61850-90-5
		M1	|	|	|	|	|	|	|	|	IEC 61850 + Breaker and Half + PMU + 61850-90-5
		M4	|	|	|	|	|	|	|	|	In-zone TX protection + IEC 61850 + PMU + 61850-90-5
		M6	|	|	|	|	|	|	|	|	In-zone TX + IEC 61850 + Breaker and Half + PMU + 61850-90-5
		M7	|	|	|	|	|	|	|	|	CyberSentry UR Lvl 1 + IEC 61850 + PMU + 61850-90-5
		M8	|	|	|	|	|	|	|	|	CyberSentry UR Lvl 1 + IEC 61850 + Breaker and Half + PMU + 61850-90-5
		MB	|	|	|	|	|	|	|	|	CyberSentry UR Lvl 1 + In-zone TX protection + IEC 61850 + PMU + 61850-90-5
		MD	|	|	|	|	|	|	|	|	IEEE 1588 + IEC 61850 + PMU + 61850-90-5
		ME	|	|	|	|	|	|	|	|	IEEE 1588 + IEC 61850 + Breaker and Half + PMU + 61850-90-5
		MH	|	|	|	|	|	|	|	|	IEEE 1588 + In-zone TX protection + IEC 61850 + PMU + 61850-90-5
		MJ	|	|	|	|	|	|	|	|	PRP + IEC 61850 + PMU + 61850-90-5
		MK	|	|	|	|	|	|	|	|	PRP + IEC 61850 + Breaker and Half + PMU + 61850-90-5
		MN	|	|	|	|	|	|	|	|	PRP + In-zone TX protection + IEC 61850 + PMU + 61850-90-5
		MP	|	|	|	|	|	|	|	|	IEEE 1588 + CyberSentry UR Lvl 1 + IEC 61850 + PMU + 61850-90-5
		MQ	|	|	|	|	|	|	|	|	IEEE 1588 + CyberSentry UR Lvl 1 + IEC 61850 + Breaker and Half + PMU + 61850-90-5
		MT	|	|	|	|	|	|	|	|	IEEE 1588 + CyberSentry UR Lvl 1 + In-zone TX protection + IEC 61850 + PMU + 61850-90-5
		MV	|	|	|	|	|	|	|	|	IEEE 1588 + PRP + IEC 61850 + PMU + 61850-90-5
		MW	|	|	|	|	|	|	|	|	IEEE 1588 + PRP + IEC 61850 + Breaker and Half + PMU + 61850-90-5
		MZ	|	|	|	|	|	|	|	|	IEEE 1588 + PRP + In-zone TX protection + IEC 61850 + PMU + 61850-90-5
		N1	|	|	|	|	|	|	|	|	PRP + CyberSentry UR Lvl 1 + IEC 61850 + PMU + 61850-90-5
		N2	|	|	|	|	|	|	|	|	PRP + CyberSentry UR Lvl 1 + IEC 61850 + Breaker and Half + PMU + 61850-90-5
		N5	|	|	|	|	|	|	|	|	PRP + CyberSentry UR Lvl 1 + In-zone TX protection + IEC 61850 + PMU + 61850-90-5
		N7	|	|	|	|	|	|	|	|	IEEE 1588 + PRP + CyberSentry UR Lvl 1 + IEC 61850 + PMU + 61850-90-5
		N8	|	|	|	|	|	|	|	|	IEEE 1588 + PRP + CyberSentry UR Lvl 1 + IEC 61850 + Breaker and Half + PMU + 61850-90-5
		NB	|	|	|	|	|	|	|	|	IEEE 1588 + PRP + CyberSentry UR Lvl 1 + In-zone TX protection + IEC 61850 + PMU + 61850-90-5
		ND	|	|	|	|	|	|	|	|	IEC 60870-5-103 + IEC 61850 + PMU + 61850-90-5
		NE	|	|	|	|	|	|	|	|	IEC 60870-5-103 + IEC 61850 + Breaker and Half + PMU + 61850-90-5
		NH	|	|	|	|	|	|	|	|	IEC 60870-5-103 + In-zone TX protection + IEC 61850 + PMU + 61850-90-5
		NJ	|	|	|	|	|	|	|	|	IEEE 1588 + PRP + IEC 60870-5-103 + IEC 61850 + PMU + 61850-90-5
		NK	|	|	|	|	|	|	|	|	IEEE 1588 + PRP + IEC 60870-5-103 + IEC 61850 + Breaker and Half + PMU + 61850-90-5
		NN	|	|	|	|	|	|	|	|	IEEE 1588 + PRP + IEC 60870-5-103 + In-zone TX protection + IEC 61850 + PMU + 61850-90-5
		NP	|	|	|	|	|	|	|	|	IEC 60870-5-103 + IEEE 1588 + PRP + CyberSentry UR Lvl 1 + IEC 61850 + PMU + 61850-90-5
		NQ	|	|	|	|	|	|	|	|	IEC 60870-5-103 + IEEE 1588 + PRP + CyberSentry UR Lvl 1 + IEC 61850 + Breaker and Half + PMU + 61850-90-5
		NT	|	|	|	|	|	|	|	|	IEC 60870-5-103 + IEEE 1588 + PRP + CyberSentry UR Lvl 1 + In-zone TX protection + IEC 61850 + PMU + 61850-90-5
		NV	|	|	|	|	|	|	|	|	CyberSentry UR Lvl 1 + In-zone TX + IEC 61850 + Breaker and Half + PMU + 61850-90-5
		NW	|	|	|	|	|	|	|	|	IEEE 1588 + In-zone TX + IEC 61850 + Breaker and Half + PMU + 61850-90-5
		NX	|	|	|	|	|	|	|	|	PRP + In-zone TX + IEC 61850 + Breaker and Half + PMU + 61850-90-5
		NY	|	|	|	|	|	|	|	|	IEEE 1588 + CyberSentry UR Lvl 1 + In-zone TX + IEC 61850 + Breaker and Half + PMU + 61850-90-5
		NZ	|	|	|	|	|	|	|	|	IEEE 1588 + PRP + In-zone TX + IEC 61850 + Breaker and Half + PMU + 61850-90-5
		O0	|	|	|	|	|	|	|	|	PRP + CyberSentry UR Lvl 1 + In-zone TX + IEC 61850 + Breaker and Half + PMU + 61850-90-5
		O1	|	|	|	|	|	|	|	|	IEEE 1588 + PRP + CyberSentry UR Lvl 1 + In-zone TX + IEC 61850 + Breaker and Half + PMU + 61850-90-5
		O2	|	|	|	|	|	|	|	|	IEC 60870-5-103 + IEEE 1588 + PRP + In-zone TX + IEC 61850 + Breaker and Half + PMU + 61850-90-5
		O3	|	|	|	|	|	|	|	|	IEC 60870-5-103 + IEEE 1588 + PRP + CyberSentry UR Lvl 1 + In-zone TX + IEC 61850 + Breaker and Half + PMU + 61850-90-5
MOUNT/COATING			V	|	|	|	|	|	|	|	Vertical (3/4 rack)
			B	|	|	|	|	|	|	|	Vertical (3/4 rack) with harsh environmental coating
FRONT PANEL + INTERFACE				F	|	|	|	|	|	|	English display
				D	|	|	|	|	|	|	French display
				R	|	|	|	|	|	|	Russian display
				K	|	|	|	|	|	|	Enhanced front panel with English display

2

L90 - * ** - * * * - F ** - H ** - L ** - N ** - R **								Reduced Size Vertical Mount
	M							Enhanced front panel with French display
	Q							Enhanced front panel with Russian display
	U							Enhanced front panel with Chinese display
	L							Enhanced front panel with English display and user-programmable pushbuttons
	N							Enhanced front panel with French display and user-programmable pushbuttons
	T							Enhanced front panel with Russian display and user-programmable pushbuttons
	V							Enhanced front panel with Chinese display and user-programmable pushbuttons
	W							Enhanced front panel with Turkish display
	Y							Enhanced front panel with Turkish display and user-programmable pushbuttons
	I							Enhanced front panel with German display
	J							Enhanced front panel with German display and user-programmable pushbuttons
POWER SUPPLY		H						125 / 250 V AC/DC power supply
		L						24 to 48 V (DC only) power supply
PROCESS BUS MODULE				81				Eight-port digital process bus module
CONTACT INPUTS/OUTPUTS			XX		XX	XX	XX	No Module
						4A		4 Solid-State (no monitoring) MOSFET outputs
						4B		4 Solid-State (voltage with optional current) MOSFET outputs
						4C		4 Solid-State (current with optional voltage) MOSFET outputs
						4D		16 Contact inputs with Auto-Burnishing (maximum of three modules within a case)
						4L		14 Form-A (no monitoring) Latching outputs
						67		8 Form-A (no monitoring) outputs
						6A		2 Form-A (voltage with optional current) and 2 Form-C outputs, 8 contact inputs
						6B		2 Form-A (voltage with optional current) and 4 Form-C outputs, 4 contact inputs
						6C		8 Form-C outputs
						6D		16 Contact inputs
						6E		4 Form-C outputs, 8 contact inputs
						6F		8 Fast Form-C outputs
						6G		4 Form-A (voltage with optional current) outputs, 8 contact inputs
						6H		6 Form-A (voltage with optional current) outputs, 4 contact inputs
						6K		4 Form-C and 4 Fast Form-C outputs
						6L		2 Form-A (current with optional voltage) and 2 Form-C outputs, 8 contact inputs
						6M		2 Form-A (current with optional voltage) and 4 Form-C outputs, 4 contact inputs
						6N		4 Form-A (current with optional voltage) outputs, 8 contact inputs
						6P		6 Form-A (current with optional voltage) outputs, 4 contact inputs
						6R		2 Form-A (no monitoring) and 2 Form-C outputs, 8 contact inputs
						6S		2 Form-A (no monitoring) and 4 Form-C outputs, 4 contact inputs
						6T		4 Form-A (no monitoring) outputs, 8 contact inputs
						6U		6 Form-A (no monitoring) outputs, 4 contact inputs
						6V		2 Form-A outputs, 1 Form-C output, 2 Form-A (no monitoring) latching outputs, 8 contact inputs
						6W		30 Contact inputs - pin terminals (max 4 modules)
						6X		18 Form-A (no monitoring) outputs - pin terminals (max 4 modules)
INTER-RELAY COMMUNICATIONS (select a maximum of 1 per unit)							2A	C37.94SM, 1300 nm single-mode, ELED, 1 channel single-mode
							2B	C37.94SM, 1300 nm single-mode, ELED, 2 channel single-mode
							2I	Channel 1 - IEEE C37.94, MM, 64/128 kbps; Channel 2 - 1300 nm, single-mode, Laser
							2J	Channel 1 - IEEE C37.94, MM, 64/128 kbps; Channel 2 - 1550 nm, single-mode, Laser
							72	1550 nm, single-mode, Laser, 1 Channel
							73	1550 nm, single-mode, Laser, 2 Channel
							76	IEEE C37.94, 820 nm, 64 kbps, multimode, LED, 1 Channel
							77	IEEE C37.94, 820 nm, 64 kbps, multimode, LED, 2 Channels
							7A	820 nm, multimode, LED, 1 Channel
							7B	1300 nm, multimode, LED, 1 Channel
							7C	1300 nm, single-mode, ELED, 1 Channel
							7D	1300 nm, single-mode, Laser, 1 Channel
							7F	Channel 1 - G.703; Channel 2 - 1300 nm, multimode
							7G	Channel 1 - G.703; Channel 2 - 1300 nm, single-mode ELED
							7H	820 nm, multimode, LED, 2 Channels
							7I	1300 nm, multimode, LED, 2 Channels
							7J	1300 nm, single-mode, ELED, 2 Channels
							7K	1300 nm, single-mode, Laser, 2 Channels
							7M	Channel 1 - RS422; Channel 2 - 1300 nm, multimode, LED
							7N	Channel 1 - RS422; Channel 2 - 1300 nm, single-mode, ELED
							7P	Channel 1 - RS422; Channel 2 - 1300 nm, single-mode, Laser
							7Q	Channel 1 - G.703; Channel 2 - 1300 nm, single-mode Laser
							7R	G.703, 1 Channel
							7S	G.703, 2 Channels
							7T	RS422, 1 Channel
							7V	RS422, 2 Channels, 2 Clock Inputs
							7W	RS422, 2 Channels

2.4.3 Replacement modules

Replacement modules can be ordered separately. When ordering a replacement CPU module or front panel, provide the serial number of your existing unit.

Not all replacement modules apply to the L90 relay. The modules specified in the order codes for the L90 are available as replacement modules for the L90.

The order codes shown here are subject to change without notice. See the web page for the product for the latest options.

Table 2-8: UR order codes for replacement modules, horizontal units

	UR - ** - *			
POWER SUPPLY		SH	A	125 / 300 V AC/DC
redundant supply only available in horizontal units and must be same type as main supply		SL	A	24 to 48 V (DC only)
CPU		T		RS485 with 3 100Base-FX Ethernet, multimode, SFP with LC
		U		RS485 with 1 100Base-TX Ethernet, SFP RJ-45 + 2 100Base-FX Ethernet, multimode, SFP with LC
		V		RS485 with 3 100Base-TX Ethernet, SFP with RJ-45
		W		RS485 with 2 100Base-FX Ethernet, multimode ST + 10/100Base-TX Ethernet, RJ-45

	UR - ** - *	
FRONT PANEL + INTERFACE	3C	Horizontal front panel with keypad and English display
	3D	Horizontal front panel with keypad and French display
	3R	Horizontal front panel with keypad and Russian display
	3A	Horizontal front panel with keypad and Chinese display
	3P	Horizontal front panel with keypad, user-programmable pushbuttons, and English display
	3G	Horizontal front panel with keypad, user-programmable pushbuttons, and French display
	3S	Horizontal front panel with keypad, user-programmable pushbuttons, and Russian display
	3B	Horizontal front panel with keypad, user-programmable pushbuttons, and Chinese display
	3K	Enhanced front panel with English display
	3M	Enhanced front panel with French display
	3Q	Enhanced front panel with Russian display
	3U	Enhanced front panel with Chinese display
	3L	Enhanced front panel with English display and user-programmable pushbuttons
	3N	Enhanced front panel with French display and user-programmable pushbuttons
	3T	Enhanced front panel with Russian display and user-programmable pushbuttons
	3V	Enhanced front panel with Chinese display and user-programmable pushbuttons
	3I	Enhanced front panel with German display
	3J	Enhanced front panel with German display and user-programmable pushbuttons
	3H	Enhanced front panel with Polish display
	3O	Enhanced front panel with Polish display and user-programmable pushbuttons
	3Z	Enhanced front panel with Japanese display
	3X	Enhanced front panel with Japanese display and user-programmable pushbuttons
	3E	7" Graphical front panel display in multiple languages with USB front port and user-programmable pushbuttons
CONTACT INPUTS AND OUTPUTS	4A	4 Solid-State (no monitoring) MOSFET outputs
	4B	4 Solid-State (voltage with optional current) MOSFET outputs
	4C	4 Solid-State (current with optional voltage) MOSFET outputs
	4D	16 Contact inputs with Auto-Burnishing
	4L	14 Form-A (no monitoring) Latching outputs
	67	8 Form-A (no monitoring) outputs
	6A	2 Form-A (voltage with optional current) and 2 Form-C outputs, 8 contact inputs
	6B	2 Form-A (voltage with optional current) and 4 Form-C outputs, 4 contact inputs
	6C	8 Form-C outputs
	6D	16 Contact inputs
	6E	4 Form-C outputs, 8 contact inputs
	6F	8 Fast Form-C outputs
	6G	4 Form-A (voltage with optional current) outputs, 8 contact inputs
	6H	6 Form-A (voltage with optional current) outputs, 4 contact inputs
	6K	4 Form-C and 4 Fast Form-C outputs
	6L	2 Form-A (current with optional voltage) and 2 Form-C outputs, 8 contact inputs
	6M	2 Form-A (current with optional voltage) and 4 Form-C outputs, 4 contact inputs
	6N	4 Form-A (current with optional voltage) outputs, 8 contact inputs
	6P	6 Form-A (current with optional voltage) outputs, 4 contact inputs
	6R	2 Form-A (no monitoring) and 2 Form-C outputs, 8 contact inputs
	6S	2 Form-A (no monitoring) and 4 Form-C outputs, 4 contact inputs
	6T	4 Form-A (no monitoring) outputs, 8 contact inputs
	6U	6 Form-A (no monitoring) outputs, 4 contact inputs
	6V	2 Form-A outputs, 1 Form-C output, 2 Form-A (no monitoring) latching outputs, 8 contact inputs
	6W	30 Contact inputs - pin terminals (max 4 modules)
	6X	18 Form-A (no monitoring) outputs - pin terminals (max 4 modules)
CT/VT MODULES (not available for the C30)	8L	Standard 4CT/4VT with enhanced diagnostics
	8N	Standard 8CT with enhanced diagnostics
	8M	Sensitive Ground 4CT/4VT with enhanced diagnostics
	8R	Sensitive Ground 8CT with enhanced diagnostics
INTER-RELAY COMMUNICATIONS	2A	C37.94SM, 1300 nm single-mode, ELED, 1 channel single-mode
	2B	C37.94SM, 1300 nm single-mode, ELED, 2 channel single-mode
	2H	IEEE C37.94, 820 nm, 128 kbps, multimode, LED, 2 Channels
	2I	Channel 1 - IEEE C37.94, multimode, 64/128 kbps; Channel 2 - 1300 nm, single-mode, Laser
	2J	Channel 1 - IEEE C37.94, multimode, 64/128 kbps; Channel 2 - 1550 nm, single-mode, Laser
	72	1550 nm, single-mode, Laser, 1 Channel
	73	1550 nm, single-mode, Laser, 2 Channel
	76	IEEE C37.94, 820 nm, multimode, LED, 1 Channel
	77	IEEE C37.94, 820 nm, multimode, LED, 2 Channels
	7A	820 nm, multimode, LED, 1 Channel
	7B	1300 nm, multimode, LED, 1 Channel
	7C	1300 nm, single-mode, ELED, 1 Channel
	7D	1300 nm, single-mode, Laser, 1 Channel
	7F	Channel 1 - G.703; Channel 2 - 1300 nm, multimode
	7G	Channel 1 - G.703; Channel 2 - 1300 nm, single-mode ELED
	7H	820 nm, multimode, LED, 2 Channels
	7I	1300 nm, multimode, LED, 2 Channels
	7J	1300 nm, single-mode, ELED, 2 Channels
	7K	1300 nm, single-mode, Laser, 2 Channels
	7M	Channel 1 - RS422; Channel 2 - 1300 nm, multimode, LED
	7N	Channel 1 - RS422; Channel 2 - 1300 nm, single-mode, ELED
	7P	Channel 1 - RS422; Channel 2 - 1300 nm, single-mode, Laser
	7Q	Channel 1 - G.703; Channel 2 - 1300 nm, single-mode Laser
	7R	G.703, 1 Channel
	7S	G.703, 2 Channels
	7T	RS422, 1 Channel
	7V	RS422, 2 Channels, 2 Clock Inputs
	7W	RS422, 2 Channels
TRANSDUCER INPUTS/OUTPUTS	5A	4 DCmA inputs, 4 DCmA outputs (only one 5A or 5D module is allowed)
	5C	8 RTD inputs
	5D	4 RTD inputs, 4 DCmA outputs (only one 5A or 5D module is allowed)
	5E	4 DCmA inputs, 4 RTD inputs
	5F	8 DCmA inputs

Table 2-9: UR order codes for replacement modules, vertical units

	UR - ** - *		
POWER SUPPLY	SH	B	125 / 300 V AC/DC
	SL	B	24 to 48 V (DC only)
CPU	T		RS485 with 3 100Base-FX Ethernet, multimode, SFP with LC
	U		RS485 with 1 100Base-TX Ethernet, SFP RJ-45 + 2 100Base-FX Ethernet, multimode, SFP with LC
	V		RS485 with 3 100Base-TX Ethernet, SFP with RJ-45
	W		RS485 with 2 100Base-FX Ethernet, multimode ST + 10/100Base-TX Ethernet, RJ-45

2

	UR - ** - *	
FRONT PANEL + INTERFACE	3F	Vertical front panel with keypad and English display
	3D	Vertical front panel with keypad and French display
	3R	Vertical front panel with keypad and Russian display
	3A	Vertical front panel with keypad and Chinese display
	3K	Enhanced front panel with English display
	3M	Enhanced front panel with French display
	3Q	Enhanced front panel with Russian display
	3U	Enhanced front panel with Chinese display
	3L	Enhanced front panel with English display and user-programmable pushbuttons
	3N	Enhanced front panel with French display and user-programmable pushbuttons
	3T	Enhanced front panel with Russian display and user-programmable pushbuttons
	3V	Enhanced front panel with Chinese display and user-programmable pushbuttons
	3I	Enhanced front panel with German display
	3J	Enhanced front panel with German display and user-programmable pushbuttons
CONTACT INPUTS/OUTPUTS	4A	4 Solid-State (no monitoring) MOSFET outputs
	4B	4 Solid-State (voltage with optional current) MOSFET outputs
	4C	4 Solid-State (current with optional voltage) MOSFET outputs
	4D	16 Contact inputs with Auto-Burnishing
	4L	14 Form-A (no monitoring) Latching outputs
	67	8 Form-A (no monitoring) outputs
	6A	2 Form-A (voltage with optional current) and 2 Form-C outputs, 8 contact inputs
	6B	2 Form-A (voltage with optional current) and 4 Form-C outputs, 4 contact inputs
	6C	8 Form-C outputs
	6D	16 Contact inputs
	6E	4 Form-C outputs, 8 contact inputs
	6F	8 Fast Form-C outputs
	6G	4 Form-A (voltage with optional current) outputs, 8 contact inputs
	6H	6 Form-A (voltage with optional current) outputs, 4 contact inputs
	6K	4 Form-C and 4 Fast Form-C outputs
	6L	2 Form-A (current with optional voltage) and 2 Form-C outputs, 8 contact inputs
	6M	2 Form-A (current with optional voltage) and 4 Form-C outputs, 4 contact inputs
	6N	4 Form-A (current with optional voltage) outputs, 8 contact inputs
	6P	6 Form-A (current with optional voltage) outputs, 4 contact inputs
	6R	2 Form-A (no monitoring) and 2 Form-C outputs, 8 contact inputs
	6S	2 Form-A (no monitoring) and 4 Form-C outputs, 4 contact inputs
	6T	4 Form-A (no monitoring) outputs, 8 contact inputs
	6U	6 Form-A (no monitoring) outputs, 4 contact inputs
	6V	2 Form-A outputs, 1 Form-C output, 2 Form-A (no monitoring) latching outputs, 8 contact inputs
	6W	30 Contact inputs - pin terminals (max 4 modules)
	6X	18 Form-A (no monitoring) outputs - pin terminals (max 4 modules)
CT/VT MODULES (not available for the C30)	8L	Standard 4CT/4VT with enhanced diagnostics
	8N	Standard 8CT with enhanced diagnostics
	8M	Sensitive Ground 4CT/4VT with enhanced diagnostics
	8R	Sensitive Ground 8CT with enhanced diagnostics
INTER-RELAY COMMUNICATIONS	2A	C37.94SM, 1300 nm single-mode, ELED, 1 channel single-mode
	2B	C37.94SM, 1300 nm single-mode, ELED, 2 channel single-mode
	2H	IEEE C37.94, 820 nm, 128 kbps, multimode, LED, 2 Channels
	2I	Channel 1 - IEEE C37.94, multimode, 64/128 kbps; Channel 2 - 1300 nm, single-mode, Laser
	2J	Channel 1 - IEEE C37.94, multimode, 64/128 kbps; Channel 2 - 1550 nm, single-mode, Laser
	72	1550 nm, single-mode, Laser, 1 Channel
	73	1550 nm, single-mode, Laser, 2 Channel
	76	IEEE C37.94, 820 nm, 64 kbps, multimode, LED, 1 Channel
	77	IEEE C37.94, 820 nm, 64 kbps, multimode, LED, 2 Channels
	7A	820 nm, multimode, LED, 1 Channel
	7B	1300 nm, multimode, LED, 1 Channel
	7C	1300 nm, single-mode, ELED, 1 Channel
	7D	1300 nm, single-mode, Laser, 1 Channel
	7F	Channel 1 - G.703; Channel 2 - 1300 nm, multimode
	7G	Channel 1 - G.703; Channel 2 - 1300 nm, single-mode ELED
	7H	820 nm, multimode, LED, 2 Channels
	7I	1300 nm, multimode, LED, 2 Channels
	7J	1300 nm, single-mode, ELED, 2 Channels
	7K	1300 nm, single-mode, Laser, 2 Channels
	7M	Channel 1 - RS422; Channel 2 - 1300 nm, multimode, LED
	7N	Channel 1 - RS422; Channel 2 - 1300 nm, single-mode, ELED
	7P	Channel 1 - RS422; Channel 2 - 1300 nm, single-mode, Laser
	7Q	Channel 1 - G.703; Channel 2 - 1300 nm, single-mode Laser
	7R	G.703, 1 Channel
	7S	G.703, 2 Channels
	7T	RS422, 1 Channel
	7V	RS422, 2 Channels, 2 Clock Inputs
	7W	RS422, 2 Channels
TRANSDUCER INPUTS/OUTPUTS	5A	4 DCmA inputs, 4 DCmA outputs (only one 5A or 5D module is allowed)
	5C	8 RTD inputs
	5D	4 RTD inputs, 4 DCmA outputs (only one 5A or 5D module is allowed)
	5E	4 DCmA inputs, 4 RTD inputs
	5F	8 DCmA inputs

2.5 Signal processing

2.5.1 UR signal processing

The UR series relays are microprocessor-based protective relays that are designed to measure power system conditions directly via CT and VT inputs and via other sources of information, such as analog inputs, communications inputs, and contact inputs. The following figure shows the overall signal processing in URs.

An analog low pass anti-aliasing filter with a 3 dB corner frequency is set at 2.4 kHz and is used for current and voltage analog filtering as well as signal conditioning. The same filtering is applied for phase, ground currents, phase-to-phase (when applicable), and auxiliary voltages. The 2.4 kHz cut-off frequency applies to both 50 Hz and 60 Hz applications and fixed in the hardware, and thus is not dependent on the system nominal frequency setting.

Figure 2-5: UR signal processing

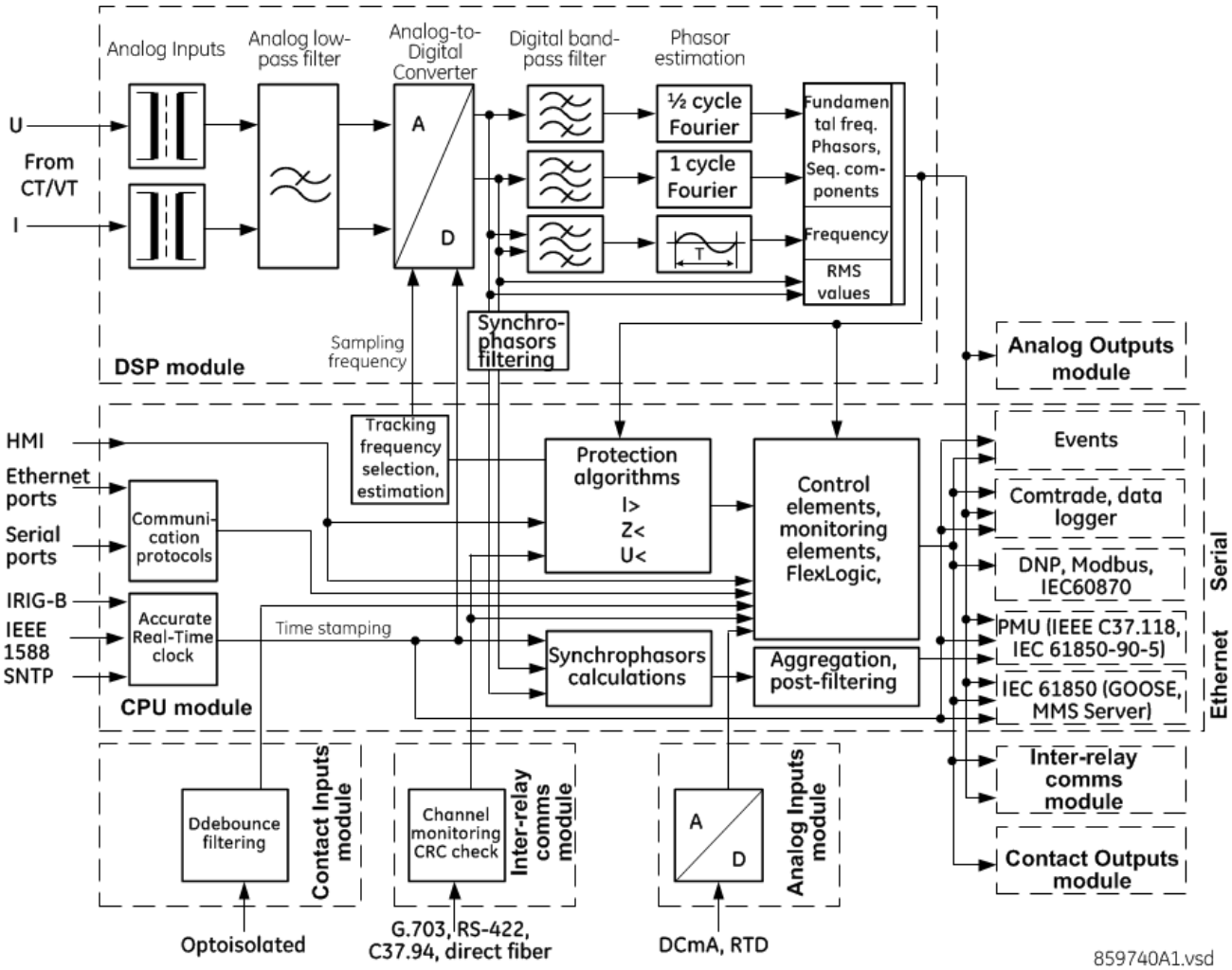

The UR samples its AC signals at 64 samples per cycle, that is, at 3840 Hz in 60 Hz systems, and 3200 Hz in 50 Hz systems. The sampling rate is dynamically adjusted to the actual system frequency by an accurate and fast frequency tracking system.

The analog/digital converter has the following ranges of AC signals:

Voltages:

$$\pm\sqrt{2}\cdot 260(\mathrm{V})$$ **Eq. 2-1**

Currents:

$$\pm\sqrt{2}\cdot 46\mathrm{rated}(\mathrm{A})$$ **Eq. 2-2**

Current harmonics are estimated based on raw samples with the use of the full-cycle Fourier filter. Harmonics 2nd through 25th are estimated.

True RMS value for the current is calculated on a per-phase basis. The true RMS can be used for demand recording or as an input signal to Time Overcurrent function, if the latter is intended for thermal protection. The true RMS is calculated as per the widely accepted definition:

$$I_{RMS(t)} = \sqrt{\frac{1}{T}\int_{(t-T)}^{t} i^2(t)\,dt}$$

Eq. 2-3

RMS values include harmonics, inter-harmonics, DC components, and so on, along with fundamental frequency values. The true RMS value reflects thermal effects of the current and is used for the thermal related monitoring and protection functions.

Protection and control functions respond to phasors of the fundamental and/or harmonic frequency components (magnitudes and angles), with an exception for some functions that have an option for RMS or fundamental measurements, or some function responding to RMS only. This type of response is explained typically in each element's section in this instruction manual.

Currents are pre-filtered using a Finite Impulse Response (FIR) digital filter. The filter is designed to reject DC components and low-frequency distortions, without amplifying high-frequency noise. This filter is referred to as a modified MIMIC filter, which provides excellent filtering and overall balance between speed and accuracy of filtering. The filter is cascaded with the full-cycle Fourier filter for the current phasor estimation.

Voltages are pre-filtered using a patented Finite Impulse Response (FIR) digital filter. The filter has been optimized to reject voltage-transformer-specific distortions, such as Capacitive Voltage Transformer (CVT) noise and high-frequency oscillatory components. The filter is cascaded with the half-cycle Fourier filter for the voltage phasor estimation.

The URs measure power system frequency using the Clarke transformation by estimating the period of the waveform from two consecutive zero-crossings in the same direction (negative-to-positive). Voltage or current samples are pre-filtered using a Finite Impulse Response (FIR) digital filter to remove high frequency noise contained in the signal. The period is used after several security conditions are met, such as true RMS signal must be above 6% nominal for a certain time. If these security conditions are not met, the last valid measurement is used for a specific time after which the UR reverts to nominal system frequency.

Synchrophasors are calculated using a patented convolution integral algorithm. This algorithm allows use of the same time-stamped samples, which are used for protection and taken at the same sampling frequency. This allows URs to use one sampling clock for both protection algorithms and synchrophasors.

Synchrophasors on firmware versions 7.23 and up have been tested and certified to meet IEEE C37.118-2011 and C37.118.1a-2014 standards for both metering and protection classes with outputs available up to 60 synchrophasors per second for the metering class and 120 synchrophasors per second for the protection class. Synchrophasors measurement is also available via IEC 61850-90-5 protocol.

The contact inputs threshold is settable in the firmware with 17, 33, 84, 166 V DC settings available. Inputs are scanned every 0.5 ms and can be conditioned for the critical applications, using debounce time timer, settable from 0.0 to 16.0 ms. Contact inputs with auto-burnishing are available as well, when external contacts are exposed to the contamination in a harsh industrial environment.

All measured values are available in the UR metering section on the front panel and via communications protocols. Measured analog values and binary signals can be captured in COMTRADE format with sampling rates from 8 to 64 samples per power cycle. Analog values can be captured with the Data Logger, allowing much slower rates extended over a long period of time.

Other advanced UR order code options are available to support IEC 61850 Ed2.0 (including fast GOOSE, MMS server, 61850 services, ICD/CID/IID files, and so on), IEEE 1588 (IEEE C37.238 power profile) based time synchronization, CyberSentry (advanced cyber security), the Parallel Redundancy Protocol (PRP), IEC 60870-5-103, and so on.

2.6 Specifications

Specifications are subject to change without notice.

2.6.1 Protection elements

The operating times include the activation time of a trip rated form-A output contact unless otherwise indicated. FlexLogic operands of a given element are 4 ms faster. Take this into account when using FlexLogic to interconnect with other protection or control elements of the relay, building FlexLogic equations, or interfacing with other intelligent electronic devices (IEDs) or power system devices via communications or different output contacts. If not specified, the operate times given here are for a 60 Hz system at nominal system frequency. Operate times for a 50 Hz system are 1.2 times longer. Timer Accuracy is specified as a percentage of the total operating time that is the sum of the Operate Time and settable Pickup Delay.

PHASE DISTANCE

Characteristic:	mho (memory polarized or offset) or quad (memory polarized or non-directional), selectable individually per zone
Number of zones:	5
Directionality:	forward, reverse, or non-directional
Reach (secondary Ω):	0.02 to 500.00 Ω in steps of 0.01
Reach accuracy:	
Zone 1:	±5% including the effect of CVT transients up to an SIR of 30 and ±7% for 30<SIR< 60 at RCA angle
Zones 2 to 5:	±5% for steady fault conditions
Distance:	
Characteristic angle:	30 to 90° in steps of 1
Comparator limit angle:	30 to 90° in steps of 1
Directional supervision:	
Characteristic angle:	30 to 90° in steps of 1
Limit angle:	30 to 90° in steps of 1
Right blinder (Quad only):	
Reach:	0.02 to 500 Ω in steps of 0.01
Characteristic angle:	60 to 90° in steps of 1
Left Blinder (Quad only):	
Reach:	0.02 to 500 Ω in steps of 0.01
Characteristic angle:	60 to 90° in steps of 1
Time delay:	0.000 to 65.535 s in steps of 0.001
Timer accuracy:	±3% of operate time or ±1/4 cycle (whichever is greater)
Current supervision:	
Level:	line-to-line current
Pickup:	0.050 to 30.000 pu in steps of 0.001
Dropout:	97 to 98%
Memory duration:	5 to 25 cycles in steps of 1
VT location:	all delta-wye and wye-delta transformers
CT location:	all delta-wye and wye-delta transformers
Voltage supervision pickup (series compensation applications):	0 to 5.000 pu in steps of 0.001

2

PHASE DISTANCE OPERATING TIME CURVES

The operating times are response times of a microprocessor part of the relay. See output contacts specifications for estimation of the total response time for a particular application. The operating times are average times including variables such as fault inception angle or type of a voltage source (magnetic VTs and CVTs). The figure shows zone 1 distance time curves for a 60 Hz system at nominal system frequency.

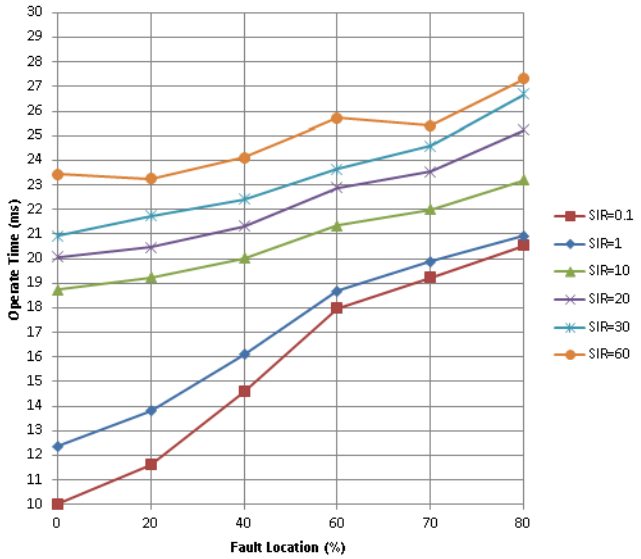

GROUND DISTANCE

Characteristic:	Mho (memory polarized or offset) or Quad (memory polarized or non-directional)
Reactance polarization:	negative-sequence or zero-sequence current
Non-homogeneity angle:	–40 to 40° in steps of 1
Number of zones:	5
Directionality:	forward, reverse, or non-directional
Reach (secondary Ω):	0.02 to 500.00 Ω in steps of 0.01
Reach accuracy:	
Zone 1:	±5% including the effect of CVT transients up to an SIR of 30 and ±7% for 30<SIR< 60 at RCA angle
Zones 2 to 5:	±5% for steady fault conditions
Distance characteristic angle:	30 to 90° in steps of 1
Distance comparator limit angle:	30 to 90° in steps of 1
Directional supervision:	
Characteristic angle:	30 to 90° in steps of 1
Limit angle:	30 to 90° in steps of 1
Zero-sequence compensation	
Z0/Z1 magnitude:	0.00 to 10.00 in steps of 0.01
Z0/Z1 angle:	–90 to 90° in steps of 1
Zero-sequence mutual compensation	
Z0M/Z1 magnitude:	0.00 to 7.00 in steps of 0.01
Z0M/Z1 angle:	–90 to 90° in steps of 1
Right blinder (Quad only):	
Reach:	0.02 to 500 Ω in steps of 0.01
Characteristic angle:	60 to 90° in steps of 1
Left blinder (Quad only):	
Reach:	0.02 to 500 Ω in steps of 0.01
Characteristic angle:	60 to 90° in steps of 1
Time delay:	0.000 to 65.535 s in steps of 0.001
Timer accuracy:	±3% of operate time or ±1/4 cycle (whichever is greater)
Current supervision:	
Level:	neutral current (3I_0)

Pickup:	0.050 to 30.000 pu in steps of 0.001
Dropout:	97 to 98%
Memory duration:	5 to 25 cycles in steps of 1
Voltage supervision pickup (series compensation applications):	0 to 5.000 pu in steps of 0.001

GROUND DISTANCE OPERATING TIME CURVES

The operating times are response times of a microprocessor part of the relay. See output contacts specifications for estimation of the total response time for a particular application. The operating times are average times including variables such as fault inception angle or type of a voltage source (magnetic VTs and CVTs). The figure shows zone 1 ground distance time curves for a 60 Hz system at nominal system frequency.

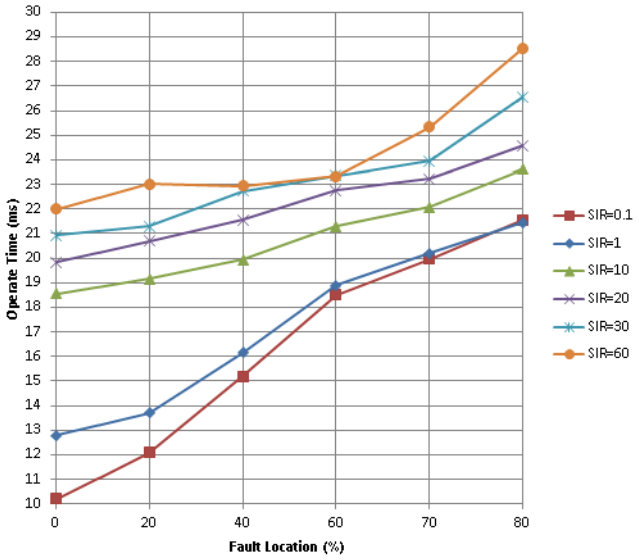

LINE PICKUP

Phase instantaneous overcurrent:	0.020 to 30.000 pu
Undervoltage pickup:	0.004 to 3.000 pu
Overvoltage delay:	0.000 to 65.535 s

LINE CURRENT DIFFERENTIAL (87L)

Application:	2 or 3 terminal line, series compensated line, tapped line, with charging current compensation
Characteristic:	Dual slope percent differential
Pickup current level:	0.20 to 4.00 pu in steps of 0.01
CT Tap (CT mismatch factor):	0.20 to 5.00 in steps of 0.01
Slope # 1:	1 to 50%
Slope # 2:	1 to 70%
Level accuracy:	±3% of reading of the maximum circuit current
Breakpoint between slopes:	0.0 to 20.0 pu in steps of 0.1
DTT:	Direct Transfer Trip (1 and 3 pole) to remote L90
Operating Time:	1.0 to 1.5 power cycles duration
Asymmetrical channel delay compensation using GPS:	asymmetry up to 10 ms
In-zone transformer group compensation:	0 to 330° in steps of 30°
Inrush inhibit level:	1.0 to 40.0%f_0 in steps of 0.1
Inrush inhibit mode:	per-phase, 2-out-of-3, average
Zero-sequence current differential (87LG):	
87LG pickup level:	0.05 to 1.00 pu in steps of 0.01
87LG slope:	1 to 50%
87LG pickup delay:	0.00 to 5.00 s in steps of 0.01

2

87LG operate time:	1.5 to 2.5 cycles

LINE CURRENT DIFFERENTIAL TRIP LOGIC

87L trip:	Adds security for trip decision; creates 1 and 3 pole trip logic
DTT:	Engaged Direct Transfer Trip (1 and 3 pole) from remote L90
DD:	Sensitive Disturbance Detector to detect fault occurrence
Stub bus protection:	Security for ring bus and 1½ breaker configurations
Open pole detector:	Security for sequential and evolving faults

RESTRICTED GROUND FAULT

Pickup:	0.005 to 30.000 pu in steps of 0.001
Dropout:	97 to 98% of pickup
Slope:	0 to 100% in steps of 1%
Level accuracy:	
0.1 to 2.0 x CT rating:	±0.5% of reading or ±1% of rated (whichever is greater)
>2.0 x CT rating	±1.5% of reading
Pickup delay:	0 to 600.00 s in steps of 0.01
Dropout delay:	0 to 600.00 s in steps of 0.01
Operate time:	<2 power system cycles

PHASE/NEUTRAL/GROUND TOC

Current:	Phasor or RMS
Pickup level:	0.020 to 30.000 pu in steps of 0.001
Dropout level:	97% of pickup
Level accuracy:	
0.1 to 2.0 × CT:	±0.5% of reading or ±0.4% of rated (whichever is greater)
> 2.0 × CT:	±1.5% of reading > 2.0 × CT rating
Timing characteristics:	IEEE Moderately/Very/Extremely Inverse; IEC (and BS) A/B/C and Short Inverse; GE IAC Inverse, Short/Very/ Extremely Inverse; I^2t; FlexCurves™ (programmable); (Curve multiplier 0.00 to 600.00 in steps of 0.01 s) Definite Time (Time delay = 0.00 to 600.00 in steps of 0.01 s)
Reset type:	Instantaneous/Timed (per IEEE)
Curve timing accuracy at 1.03 to 20 x pickup:	
	±3.5% of operate time or ±½ cycle (whichever is greater) from pickup to operate
Voltage restraint:	Modifies pickup current for voltage in the range of 0.1 < V < 0.9 VT Nominal in a fixed linear relationship

PHASE/NEUTRAL/GROUND IOC

Pickup level:	0.020 to 30.000 pu in steps of 0.001
Dropout level:	97% of pickup
Level accuracy:	
0.1 to 2.0 × CT rating:	±0.5% of reading or ±0.4% of rated (whichever is greater)
> 2.0 × CT rating:	±1.5% of reading
Overreach:	<2%
Pickup delay:	0.00 to 600.00 s in steps of 0.01
Reset delay:	0.00 to 600.00 s in steps of 0.01
Operate time:	<16 ms at 3 × pickup at 60 Hz (Phase IOC) <20 ms at 3 × pickup at 60 Hz (Neutral IOC) <25 ms at 3 × pickup at 60 Hz (Ground IOC)
Timer accuracy:	±3.5% of operate time or ±1/4 cycle (whichever is greater)

NEGATIVE SEQUENCE TOC

Current:	Phasor
Pickup level:	0.020 to 30.000 pu in steps of 0.001
Dropout level:	97% of pickup

Level accuracy:	±0.5% of reading or ±0.4% of rated (whichever is greater) from 0.1 to 2.0 × CT rating ±1.5% of reading > 2.0 × CT rating
Timing characteristics:	IEEE Moderately/Very/Extremely Inverse; IEC (and BS) A/B/C and Short Inverse; GE IAC Inverse, Short/Very/ Extremely Inverse; I^2t; FlexCurves™ (programmable) (Curve multiplier = 0.00 to 600.00 in steps of 0.01 s); Definite Time (Time delay = 0.00 to 600.00 in steps of 0.01 s)
Reset type:	Instantaneous/Timed (per IEEE) and Linear
Curve timing accuracy at 1.03 to 20 × pickup:	±3.5% of operate time or ±½ cycle (whichever is greater) from pickup to operate

NEGATIVE SEQUENCE IOC

Current:	Phasor
Pickup level:	0.020 to 30.000 pu in steps of 0.001
Dropout level:	97% of pickup
Level accuracy:	
0.1 to 2.0 × CT rating:	±0.5% of reading or ±0.4% of rated (whichever is greater)
>2.0 × CT rating:	±1.5% of reading
Overreach:	<2%
Pickup delay:	0.00 to 600.00 s in steps of 0.01
Reset delay:	0.00 to 600.00 s in steps of 0.01
Operate time:	<20 ms at 3 × pickup at 60 Hz
Timer accuracy:	±3% of operate time or ±1/4 cycle (whichever is greater)

PHASE DIRECTIONAL OVERCURRENT

Relay connection:	90° (quadrature)
Quadrature voltage:	ABC phase seq.: phase A (V_{BC}), phase B (V_{CA}), phase C (V_{AB}); ACB phase seq.: phase A (V_{CB}), phase B (V_{AC}), phase C (V_{BA})
Polarizing voltage threshold:	0.004 to 3.000 pu in steps of 0.001
Current sensitivity threshold:	0.05 pu
Characteristic angle:	0 to 359° in steps of 1
Angle accuracy:	±2°
Operation time (FlexLogic operands):	
Tripping (reverse load, forward fault):	<12 ms, typically
Blocking (forward load, reverse fault):	<8 ms, typically

NEUTRAL DIRECTIONAL OVERCURRENT

Directionality:	Co-existing forward and reverse
Polarizing:	Voltage, Current, Dual, Dual-V, Dual-I
Polarizing voltage:	V_0 or VX
Polarizing current:	IG
Operating current:	I_0
Level sensing:	3 × (|I_0| – K × |I_1|), IG Independent for forward and reverse
Restraint, K:	0.000 to 0.500 in steps of 0.001
Characteristic angle:	–90 to 90° in steps of 1
Limit angle:	40 to 90° in steps of 1, independent for forward and reverse
Angle accuracy:	±2°
Offset impedance:	0.00 to 250.00 Ω in steps of 0.01
Pickup level:	0.002 to 30.000 pu in steps of 0.01
Dropout level:	97 to 98%
Operation time:	<16 ms at 3 × pickup at 60 Hz

NEGATIVE SEQUENCE DIRECTIONAL OC

Directionality:	Co-existing forward and reverse
Polarizing:	Voltage
Polarizing voltage:	V_2
Operating current:	I_2
Level sensing:	

2

Zero-sequence:	|I_0| – K × |I_1|
Negative-sequence:	|I_2| – K × |I_1|
Restraint, K:	0.000 to 0.500 in steps of 0.001
Characteristic angle:	0 to 90° in steps of 1
Limit angle:	40 to 90° in steps of 1, independent for forward and reverse
Angle accuracy:	±2°
Offset impedance:	0.00 to 250.00 Ω in steps of 0.01
Pickup level:	0.015 to 30.000 pu in steps of 0.01
Dropout level:	97%
Operation time:	<16 ms at 3 × pickup at 60 Hz

WATTMETRIC ZERO-SEQUENCE DIRECTIONAL

Measured power:	zero-sequence
Number of elements:	2
Characteristic angle:	0 to 360° in steps of 1
Minimum power:	0.001 to 1.200 pu in steps of 0.001
Pickup level accuracy:	±1% or ±0.0025 pu, whichever is greater
Hysteresis:	3% or 0.001 pu, whichever is greater
Timing characteristics:	Inverse time, or FlexCurve (Curve multiplier= 0.01 to 2.00 in steps of 0.01 s); Definite Time (Time delay = 0.00 to 600.00 in steps of 0.01 s)
Curve timing accuracy:	±3.5% of operate time or ±1 cycle (whichever is greater) from pickup to operate
Operate time:	<30 ms at 60 Hz

SENSITIVE DIRECTIONAL POWER

Measured power:	3-phase, true RMS
Number of stages:	2
Characteristic angle:	0 to 359° in steps of 1
Calibration angle:	0.00 to 0.95° in steps of 0.05
Minimum power:	–1.200 to 1.200 pu in steps of 0.001
Pickup level accuracy:	±1% or ±0.001 pu, whichever is greater
Hysteresis:	2% or 0.001 pu, whichever is greater
Pickup delay:	0 to 600.00 s in steps of 0.01
Timer accuracy:	±3% of operate time or ±1/4 cycle (whichever is greater)
Operate time:	<50 ms

PHASE UNDERVOLTAGE

Voltage:	Phasor only
Pickup level:	0.004 to 3.000 pu in steps of 0.001
Dropout level:	102% of pickup
Level accuracy:	±0.5% of reading from 10 to 208 V
Timing characteristics:	GE IAV Inverse (Curve multiplier 0.00 to 600.00 in steps of 0.01 s) Definite Time (Time delay = 0.00 to 600.00 in steps of 0.01 s)
Curve timing accuracy at <0.90 × pickup:	±3.5% of operate time or ±1/2 cycle (whichever is greater) from pickup to operate
Operate time:	<30 ms at 0.9 pickup at 60 Hz for Definite Time mode

AUXILIARY UNDERVOLTAGE

Pickup level:	0.004 to 3.000 pu in steps of 0.001
Dropout level:	103% of pickup
Level accuracy:	±0.5% of reading from 10 to 208 V
Timing characteristics:	GE IAV Inverse (Curve multiplier = 0.00 to 600.00 in steps of 0.01 s); Definite Time (Time delay = 0.00 to 600.00 in steps of 0.01 s)
Curve timing accuracy at <0.90 × pickup:	±3.5% of operate time or ±1/2 cycle (whichever is greater) from pickup to operate
Operate time:	<30 ms at 0.9 pickup at 60 Hz for Definite Time mode

PHASE OVERVOLTAGE

Voltage:	Phasor only

Pickup level:	0.004 to 3.000 pu in steps of 0.001
Dropout level:	98% of pickup
Level accuracy:	±0.5% of reading from 10 to 208 V
Pickup delay:	0.00 to 600.00 in steps of 0.01 s
Operate time:	<30 ms at 1.10 × pickup at 60 Hz
Timer accuracy:	±3% of operate time or ±1/4 cycle (whichever is greater)

COMPENSATED OVERVOLTAGE

Elements:	1
Stages:	3
Pickup threshold:	0.250 to 3.000 pu in steps of 0.001
Pickup level accuracy:	±0.5% of reading from 10 to 208 V
Hysteresis:	97 to 98% of pickup
Pickup delay:	0.00 to 600.00 s in steps of 0.01
Timer accuracy:	±3% of operate time or ±20 ms (whichever is greater)
Operate time:	<2 cycles at 1.10 × pickup

NEUTRAL OVERVOLTAGE

Pickup level:	0.004 to 3.000 pu in steps of 0.001
Dropout level:	97% of pickup
Level accuracy:	±0.5% of reading from 10 to 208 V
Pickup delay:	0.00 to 600.00 s in steps of 0.01 (definite time) or user-defined curve
Reset delay:	0.00 to 600.00 s in steps of 0.01
Curve timing accuracy at >1.1 pickup:	±3.5% of operate time or ±1 cycle (whichever is greater) from pickup to operate
Operate time:	<30 ms at 1.10 × pickup at 60 Hz

AUXILIARY OVERVOLTAGE

Pickup level:	0.004 to 3.000 pu in steps of 0.001
Dropout level:	97% of pickup
Level accuracy:	±0.5% of reading from 10 to 208 V
Pickup delay:	0 to 600.00 s in steps of 0.01
Reset delay:	0 to 600.00 s in steps of 0.01
Timer accuracy:	±3% of operate time or ±1/4 cycle (whichever is greater)
Operate time:	<30 ms at 1.10 × pickup at 60 Hz

VOLTS PER HERTZ

Voltage:	Phase-to-phase or phase-to-ground, phasor only
Pickup level:	0.80 to 4.00 in steps of 0.01 pu V/Hz
Dropout level:	98% of pickup
Level accuracy:	±0.02 pu
Pickup delay:	0 to 600.00 s in steps of 0.01
Timing characteristics:	Inverse A, B, and C, FlexCurves A, B, C, and D (Curve multiplier 0.00 to 600.00 in steps of 0.01 s) Definite Time (Time delay = 0.00 to 600.00 in steps of 0.01 s)
Reset delay:	0.0 to 1000.0 s in steps of 0.1
Timer accuracy:	±3% of operate time or ±3 cycles (whichever is greater) for values greater than 1.1 × pickup

UNDERFREQUENCY

Minimum signal:	0.10 to 1.25 pu in steps of 0.01
Pickup level:	20.00 to 65.00 Hz in steps of 0.01
Dropout level:	pickup + 0.03 Hz
Level accuracy:	±0.001 Hz
Time delay:	0 to 65.535 s in steps of 0.001
Timer accuracy:	±3% of operate time or ±1/4 cycle (whichever is greater)
Operate time:	typically 4 cycles at 0.1 Hz/s change typically 3.5 cycles at 0.3 Hz/s change typically 3 cycles at 0.5 Hz/s change

Typical times are average operate times including variables, such as frequency change instance, and test method, and can vary by ±0.5 cycles.

2

OVERFREQUENCY

Pickup level:	20.00 to 65.00 Hz in steps of 0.01
Dropout level:	pickup – 0.03 Hz
Level accuracy:	±0.001 Hz
Time delay:	0 to 65.535 s in steps of 0.001
Timer accuracy:	±3% of operate time or ±1/4 cycle (whichever is greater)
Operate time:	typically 4 cycles at 0.1 Hz/s change typically 3.5 cycles at 0.3 Hz/s change typically 3 cycles at 0.5 Hz/s change

Typical times are average operate times including variables such as frequency change instance, test method, and so on, and can vary by ±0.5 cycles.

RATE OF CHANGE OF FREQUENCY

df/dt trend:	increasing, decreasing, bi-directional
df/dt pickup level:	0.10 to 15.00 Hz/s in steps of 0.01
df/dt dropout level:	96% of pickup
df/dt level accuracy:	80 mHz/s or 3.5%, whichever is greater
Overvoltage supv.:	0.100 to 3.000 pu in steps of 0.001
Overcurrent supv.:	0.020 to 30.000 pu in steps of 0.001
Pickup delay:	0 to 65.535 s in steps of 0.001
Reset delay:	0 to 65.535 s in steps of 0.001
Timer accuracy:	±3% of operate time or ±1/4 cycle (whichever is greater)
Operate time:	typically 9.5 cycles at 2 × pickup typically 8.5 cycles at 3 × pickup typically 6.5 cycles at 5 × pickup

Typical times are average operate times including variables such as frequency change instance, test method, and so on, and can vary by ±0.5 cycles.

BREAKER FAILURE

Mode:	1-pole, 3-pole
Current supervision:	phase, neutral current
Current supv. pickup:	0.020 to 30.000 pu in steps of 0.001
Current supv. dropout:	97% of pickup
Current supv. accuracy:	
0.1 to 2.0 × CT rating:	±0.75% of reading or ±2% of rated (whichever is greater)
above 2 × CT rating:	±2.5% of reading

BREAKER ARCING CURRENT

Principle:	accumulates breaker duty (I^2t) and measures fault duration
Initiation:	programmable per phase from any FlexLogic operand
Compensation for auxiliary relays:	0 to 65.535 s in steps of 0.001
Alarm threshold:	0 to 50000 kA^2-cycle in steps of 1
Fault duration accuracy:	0.25 of a power cycle
Availability:	1 per CT bank with a minimum of 2

BREAKER FLASHOVER

Operating quantity:	phase current, voltage, and voltage difference
Pickup level voltage:	0.004 to 1.500 pu in steps of 0.001
Dropout level voltage:	97% of pickup
Pickup level current:	0.020 to 1.500 pu in steps of 0.001
Dropout level current:	97% of pickup
Level accuracy:	±0.5% or ±0.1% of rated, whichever is greater
Pickup delay:	0 to 65.535 s in steps of 0.001
Timer accuracy:	±3% of operate time or ±42 ms, whichever is greater
Operate time:	<42 ms at 1.10 × pickup at 60 Hz

BREAKER RESTRIKE

Principle:	detection of high-frequency overcurrent condition ¼ cycle after breaker opens
Availability:	one per digital signal processor (DSP)
Pickup level:	0.1 to 2.00 pu in steps of 0.01
Reset delay:	0.000 to 65.535 s in steps of 0.001

SYNCHROCHECK

Max voltage difference:	0 to 400000 V in steps of 1
Max angle difference:	0 to 100° in steps of 1
Max freq. difference:	0.00 to 2.00 Hz in steps of 0.01
Hysteresis for max. freq. diff.:	0.00 to 0.10 Hz in steps of 0.01
Dead source function:	None, LV1 & DV2, DV1 & LV2, DV1 or DV2, DV1 xor DV2, DV1 & DV2 (L = Live, D = Dead)
S-CLS MAX dF:	0.10 to 2.00 Hz in steps of 0.01
S-CLS MIN dF:	0.01 to 1.00 Hz in steps of 0.01
V2 MAG CORR FACTOR:	0.10 to 10.00 in steps of 0.01
V2 ANGLE SHIFT:	-180° to +180° in steps of 1°

AUTORECLOSURE

Two breakers applications
Single- and three-pole tripping schemes
Up to four reclose attempts before lockout
Selectable reclosing mode and breaker sequence

PILOT-AIDED SCHEMES

Direct Underreaching Transfer Trip (DUTT)
Permissive Underreaching Transfer Trip (PUTT)
Permissive Overreaching Transfer Trip (POTT)
Hybrid POTT Scheme
Directional Comparison Blocking Scheme
Directional Comparison Unblocking Scheme (DCUB)

TRIP OUTPUT

Collects trip and reclose input requests and issues outputs to control tripping and reclosing.

Communications timer delay:	0 to 65535 s in steps of 0.001
Evolving fault timer:	0.000 to 65.535 s in steps of 0.001
Timer accuracy:	±3% of operate time or ±1/4 cycle (whichever is greater)

POWER SWING DETECT

Functions:	Power swing block, out-of-step trip
Characteristic:	Mho or Quad
Measured impedance:	Positive-sequence
Blocking / tripping modes:	2-step or 3-step
Tripping mode:	Early or Delayed
Current supervision:	
Pickup level:	0.050 to 30.000 pu in steps of 0.001
Dropout level:	97 to 98% of pickup
Fwd / reverse reach (sec. Ω):	0.10 to 500.00 Ω in steps of 0.01
Left and right blinders (sec. Ω):	0.10 to 500.00 Ω in steps of 0.01
Impedance accuracy:	±5%
Fwd / reverse angle impedances:	40 to 90° in steps of 1
Angle accuracy:	±2°
Characteristic limit angles:	40 to 140° in steps of 1
Timers:	0.000 to 65.535 s in steps of 0.001
Timer accuracy:	±3% of operate time or ±1/4 cycle (whichever is greater)

LOAD ENCROACHMENT

Responds to:	Positive-sequence quantities

Minimum voltage:	0.004 to 3.000 pu in steps of 0.001
Reach (sec. Ω):	0.02 to 250.00 Ω in steps of 0.01
Impedance accuracy:	±5%
Angle:	5 to 50° in steps of 1
Angle accuracy:	±2°
Pickup delay:	0 to 65.535 s in steps of 0.001
Reset delay:	0 to 65.535 s in steps of 0.001
Timer accuracy:	±3% of operate time or ±1/4 cycle (whichever is greater)
Operate time:	<30 ms at 60 Hz

OPEN POLE DETECTOR

Functionality:	Detects an open pole condition, monitoring breaker auxiliary contacts, the current in each phase, and optional voltages on the line
Current pickup level:	0.020 to 30.000 pu in steps of 0.001
Line capacitive reactances (X_{C1}, X_{C0}):	300.0 to 9999.9 sec. Ω in steps of 0.1
Remote current pickup level:	0.000 to 30.000 pu in steps of 0.001
Current dropout level:	pickup + 3%, not less than 0.05 pu

THERMAL OVERLOAD PROTECTION

Thermal overload curves:	IEC 255-8 curve
Base current:	0.20 to 3.00 pu in steps of 0.01
Overload (k) factor:	1.00 to 1.20 pu in steps of 0.05
Trip time constant:	0 to 1000 min. in steps of 1
Reset time constant:	0 to 1000 min. in steps of 1
Minimum reset time:	0 to 1000 min. in steps of 1
Timer accuracy (cold curve):	±100 ms or 2%, whichever is greater
Timer accuracy (hot curve):	±500 ms or 2%, whichever is greater for $I_p < 0.9 \times k \times I_b$ and $I / (k \times I_b) > 1.1$

TRIP BUS (TRIP WITHOUT FLEXLOGIC)

Number of elements:	6
Number of inputs:	16
Operate time:	<2 ms at 60 Hz
Timer accuracy:	±3% or 10 ms, whichever is greater

2.6.2 User-programmable elements

FLEXLOGIC

Programming language:	Reverse Polish Notation with graphical visualization (keypad programmable)
Lines of code:	1024
Internal variables:	64
Supported operations:	NOT, XOR, OR (2 to 16 inputs), AND (2 to 16 inputs), NOR (2 to 16 inputs), NAND (2 to 16 inputs), latch (reset-dominant), edge detectors, timers
Inputs:	any logical variable, contact, or virtual input
Number of timers:	32
Pickup delay:	0 to 60000 (ms, sec., min.) in steps of 1
Dropout delay:	0 to 60000 (ms, sec., min.) in steps of 1
Timer accuracy:	±0.1% of operate time or ±1/8 cycle, whichever is greater

FLEXCURVES™

Number:	4 (A through D)
Reset points:	40 (0 through 1 of pickup)
Operate points:	80 (1 through 20 of pickup)
Time delay:	0 to 65535 ms in steps of 1

FLEX STATES

Number:	up to 256 logical variables grouped under 16 Modbus addresses

Programmability:	any logical variable, contact, or virtual input

FLEXELEMENTS™

Number of elements:	8
Operating signal:	any analog actual value, or two values in differential mode
Operating signal mode:	signed or absolute value
Operating mode:	level, delta
Comparator direction:	over, under
Pickup level:	–90.000 to 90.000 pu in steps of 0.001
Hysteresis:	0.1 to 50.0% in steps of 0.1
Delta dt:	20 ms to 60 days
Pickup and dropout delay:	0.000 to 65.535 s in steps of 0.001

NON-VOLATILE LATCHES

Type:	set-dominant or reset-dominant
Number:	16 (individually programmed)
Output:	stored in non-volatile memory
Execution sequence:	as input prior to protection, control, and FlexLogic

USER-PROGRAMMABLE LEDs (Enhanced and basic front panels)

Number:	48 plus trip and alarm
Programmability:	from any logical variable, contact, or virtual input
Reset mode:	self-reset or latched

LED TEST

Initiation:	from any contact input or user-programmable condition
Number of tests:	3, interruptible at any time
Duration of full test:	approximately 3 minutes
Test sequence 1:	all LEDs on
Test sequence 2:	all LEDs off, one LED at a time on for 1 s
Test sequence 3:	all LEDs on, one LED at a time off for 1 s

USER-DEFINABLE DISPLAYS (Enhanced and basic front panels)

Number of displays:	16
Lines of display:	2 × 20 alphanumeric characters
Parameters:	up to 5, any Modbus register addresses
Invoking and scrolling:	keypad, or any user-programmable condition, including pushbuttons

CONTROL PUSHBUTTONS (Enhanced and basic front panels)

Number of pushbuttons:	7
Operation:	drive FlexLogic operands

USER-PROGRAMMABLE PUSHBUTTONS

Number of pushbuttons:	12 on basic front panel 16 on enhanced horizontal front panel 6 on enhanced vertical front panel 16 on graphical front panel (8 physical pushbuttons, 8 graphical interface pushbuttons)
Mode:	self-reset, latched
Display message:	2 lines of 20 characters each
Drop-out timer:	0.00 to 60.00 s in steps of 0.05
Autoreset timer:	0.2 to 600.0 s in steps of 0.1
Hold timer:	0.0 to 10.0 s in steps of 0.1

SELECTOR SWITCH

Number of elements:	2
Upper position limit:	1 to 7 in steps of 1
Selecting mode:	time-out or acknowledge
Time-out timer:	3.0 to 60.0 s in steps of 0.1

2

Control inputs:	step-up and 3-bit
Power-up mode:	restore from non-volatile memory or synchronize to a 3-bit control input or synch/restore mode

DIGITAL ELEMENTS

Number of elements:	48
Operating signal:	any FlexLogic operand
Pickup delay:	0.000 to 999999.999 s in steps of 0.001
Dropout delay:	0.000 to 999999.999 s in steps of 0.001
Timing accuracy:	±3% or ±4 ms, whichever is greater

2.6.3 Monitoring

OSCILLOGRAPHY

Number of records:	3 to 64, configurable
Sampling rate:	8, 16, 32, or 64 samples per power cycle, configurable
Triggers:	any FlexLogic operand, configurable
Trigger position:	0 to 100%, configurable
Recorded data:	raw AC input channels up to 64 configured digital channels, representing any FlexLogic operand up to 16 configured analog channels, representing any measured analog value
Data storage:	in non-volatile memory
Format:	COMTRADE IEEE C37.111 (1999 or 2013)

EVENT RECORDER

Capacity:	1024 events
Time-tag:	to 1 microsecond
Triggers:	any FlexLogic operand, configurable
Data storage:	in non-volatile memory

DATA LOGGER

Number of channels:	1 to 16
Parameters:	any available analog actual value
Sampling rate:	15 to 3600000 ms in steps of 1
Trigger:	any FlexLogic operand
Mode:	continuous or triggered
Storage capacity:	(NN is dependent on memory) 1-second rate: 01 channel for NN days 16 channels for NN days ↓ 60-minute rate: 01 channel for NN days 16 channels for NN days

FAULT LOCATOR

Number of independent fault locators:	1
Method:	multi-ended or single-ended during channel failure
Voltage source:	wye-connected VTs, delta-connected VTs and neutral voltage, delta-connected VTs and zero-sequence current (approximation)
Maximum accuracy if:	fault resistance is zero and fault currents from all line terminals are approximately in phase (single-ended method)
Relay accuracy:	±1.5% (V > 10 V, I > 0.2 pu), single-ended method ±0.5% (V > 10 V, I > 0.2 pu), multi-ended method
Worst-case accuracy:	
$VT_{\%error}$ +	user data
$CT_{\%error}$ +	user data
$Z_{Line\%error}$ +	user data

$METHOD_{error}$ + 1.5%	single-ended method
$METHOD_{error}$ + 0.5%	multi-ended method

See Theory of Operation chapter, Fault Locator section

PHASOR MEASUREMENT UNIT

Output format:	per IEEE C37.118-2011, C37.118.1a-2014, or IEC 61850-90-5 standard
Number of channels:	14 synchrophasors, 8 analogs, 16 digitals
TVE (total vector error):	<1%
Triggering:	frequency, voltage, current, power, rate of change of frequency, user-defined
Reporting rate:	1, 2, 5, 10, 12, 15, 20, 25, 30, 50, or 60 times per second for P and M class, and 100 or 120 times per second for P class only
Number of clients:	one over TCP/IP port and one over UDP/IP per aggregator
AC ranges:	as indicated in appropriate specification sections
Network reporting format:	16-bit integer (for IEEE C37.118) or 32-bit IEEE floating point numbers
Network reporting style:	rectangular (real and imaginary for IEEE C37.188) or polar (magnitude and angle) coordinates
Post-filtering:	none, 3-point, 5-point, 7-point
Calibration:	±5° (angle) and ±5% (magnitude)

2.6.4 Metering

RMS CURRENT: PHASE, NEUTRAL, AND GROUND

Accuracy at

0.1 to 2.0 × CT rating:	±0.25% of reading or ±0.1% of rated (whichever is greater)
> 2.0 × CT rating:	±1.0% of reading

RMS VOLTAGE

Accuracy:	±0.5% of reading from 10 to 208 V

REAL POWER (WATTS)

Accuracy at 0.1 to 1.5 x CT rating and 0.8 to 1.2 x VT rating:

±1.0% of reading at $-1.0 \le PF < -0.8$ and $0.8 < PF \le 10$

REACTIVE POWER (VARS)

Accuracy at 0.1 to 1.5 x CT rating and 0.8 to 1.2 x VT rating:

±1.0% of reading at $-0.2 \le PF \le 0.2$

APPARENT POWER (VA)

Accuracy at 0.1 to 1.5 x CT rating and 0.8 to 1.2 x VT rating:

±1.0% of reading

WATT-HOURS (POSITIVE AND NEGATIVE)

Accuracy:	±2.0% of reading
Range:	±0 to 1×10^6 MWh
Parameters:	three-phase only
Update rate:	50 ms

VAR-HOURS (POSITIVE AND NEGATIVE)

Accuracy:	±2.0% of reading
Range:	±0 to 1×10^6 Mvarh
Parameters:	three-phase only
Update rate:	50 ms

CURRENT HARMONICS

Harmonics:	2nd to 25th harmonic: per phase, displayed as a % of $I(f_1)$ (current fundamental frequency phasor) THD: per phase, displayed as a % of $I(f_1)$
Accuracy:	
HARMONICS:	with $I(f_1)$ 0.4 to 2.0 × CT rating: ±2% of reading or ±1% of 100%, whichever is greater

2

THD:	with $I(f_1)$ from 0.4 to 2.0 × CT rating: ±2% of reading or ±1% of 100% per each harmonic, whichever is greater
Accuracy applies to:	2nd to 25th harmonic including THD with a regular CT/VT module 2nd to 15th harmonic including THD with a HardFiber Process Bus Module (order code 81)

VOLTAGE HARMONICS

Harmonics:	2nd to 25th harmonic: per phase, displayed as a % of $V(f_1)$ (voltage fundamental frequency phasor) THD: per phase, displayed as a % of $V(f_1)$
Accuracy:	
HARMONICS:	with $V(f_1)$ 25 to 208 V: ±2% of reading or ±1% of 100%, whichever is greater
THD:	with $V(f_1)$ 25 to 208 V: ±2% of reading or ±1% of 100% per each harmonic, whichever is greater
Accuracy applies to:	2nd to 25th harmonic including THD with a regular CT/VT module 2nd to 15th harmonic including THD with a HardFiber Process Bus Module (order code 81)

FREQUENCY

Accuracy for 45 to 65Hz input at	
V = 0.8 to 1.2 pu:	±0.001 Hz (when voltage signal is used for frequency measurement)
I = 0.1 to 0.25 pu:	±0.02 Hz (when current signal is used for frequency measurement)
I > 0.25 pu:	±0.005 Hz (when current signal is used for frequency measurement)

DEMAND

Measurements:	Phases A, B, and C present and maximum measured currents 3-Phase Power (P, Q, and S) present and maximum measured currents
Accuracy:	±2.0%

2.6.5 Inputs

AC CURRENT

CT rated primary:	1 to 50000 A
CT rated secondary:	1 or 5 A by connection
Relay burden:	< 0.2 VA at rated secondary
Conversion range:	
Standard CT:	0.02 to 46 × CT rating RMS symmetrical
Sensitive Ground CT module:	0.002 to 4.6 × CT rating RMS symmetrical
Current withstand:	20 ms at 250 times rated 1 sec at 100 times rated continuous 4xInom
Short circuit rating:	150000 RMS symmetrical amperes, 250 V maximum (primary current to external CT)

AC VOLTAGE

VT rated secondary:	25.0 to 240.0 V
VT ratio:	1.00 to 24000.00
Relay burden:	< 0.25 VA at 120 V
Conversion range:	1 to 275 V
Voltage withstand:	continuous at 260 V to neutral 1 min/hr at 420 V to neutral

FREQUENCY

Nominal frequency setting:	25 to 60 Hz
Sampling frequency:	64 samples per power cycle
Tracking frequency range (DSP):	45 to 65 Hz

CONTACT INPUTS

Dry contacts:	1000 Ω maximum
Wet contacts:	300 V DC maximum
Selectable thresholds:	17 V, 33 V, 84 V, 166 V

Tolerance:	±10%
Contacts per common return:	4
Recognition time:	< 1 ms
Debounce time:	0.0 to 16.0 ms in steps of 0.5
Continuous current draw:	4 mA (when energized)

CONTACT INPUTS WITH AUTO-BURNISHING

Dry contacts:	1000 Ω maximum
Wet contacts:	300 V DC maximum
Selectable thresholds:	17 V, 33 V, 84 V, 166 V
Tolerance:	±10%
Contacts per common return:	2
Recognition time:	< 1 ms
Debounce time:	0.0 to 16.0 ms in steps of 0.5
Continuous current draw:	4 mA (when energized)
Auto-burnish impulse current:	50 to 70 mA
Duration of auto-burnish impulse:	25 to 50 ms

DCMA INPUTS

Current input (mA DC):	0 to –1, 0 to +1, –1 to +1, 0 to 5, 0 to 10, 0 to 20, 4 to 20 (programmable)
Input impedance:	379 Ω ±10%
Conversion range:	–1 to + 20 mA DC
Accuracy:	±0.2% of full scale
Type:	Passive

RTD INPUTS

Types (3-wire):	100 Ω Platinum, 100 and 120 Ω Nickel, 10 Ω Copper
Sensing current:	5 mA
Range:	–50 to +250°C
Accuracy:	±2°C
Isolation:	36 V pk-pk

IRIG-B INPUT

IRIG formats accepted:	B000...B007, B120...B127
IRIG control bits:	IEEE Std C37.118.1-2011
Amplitude modulation:	1 to 10 V pk-pk
DC shift:	TTL–Compatible
Input impedance:	50 kΩ
Isolation:	2 kV

2.6.6 Power supply

LOW RANGE

Nominal DC voltage:	24 to 48 V
Minimum DC voltage:	20 V
Maximum DC voltage:	75 V for SL power supply module
Voltage loss hold-up:	200 ms duration at maximum load

NOTE: Low range is DC only.

HIGH RANGE

Nominal DC voltage:	125 to 250 V
Minimum DC voltage:	88 V
Maximum DC voltage:	300 V
Nominal AC voltage:	100 to 240 V at 50/60 Hz
Minimum AC voltage:	88 V at 25 to 100 Hz
Maximum AC voltage:	265 V at 25 to 100 Hz

2

Voltage loss hold-up: 200 ms duration at maximum load

ALL RANGES

Volt withstand: 2 × Highest Nominal Voltage for 10 ms
Power consumption: typical = 15 to 20 W/VA
maximum = 45 W/VA
contact factory for exact order code consumption

INTERNAL FUSE

Ratings:
Low range power supply: 8 A / 250 V
High range power supply: 4 A / 250 V
Interrupting capacity:
AC: 100 000 A RMS symmetrical
DC: 10 000 A

2.6.7 Outputs

FORM-A RELAY

Make and carry for 0.2 s: 30 A as per ANSI C37.90
Carry continuous: 6 A
Break (DC inductive, L/R = 40 ms):

Voltage	Current
24 V	1 A
48 V	0.5 A
125 V	0.3 A
250 V	0.2 A

Operate time: < 4 ms
Contact material: silver alloy

LATCHING RELAY

Make and carry for 0.2 s: 30 A as per ANSI C37.90
Carry continuous: 6 A as per IEEE C37.90
Break (DC resistive as per IEC 61810-1):

Voltage	Current
24 V	6 A
48 V	1.6 A
125 V	0.4 A
250 V	0.2 A

Operate time: < 4 ms
Contact material: silver alloy
Control: separate operate and reset inputs
Control mode: operate-dominant or reset-dominant

FORM-A VOLTAGE MONITOR

Applicable voltage: approx. 15 to 250 V DC
Trickle current: approx. 1 to 2.5 mA

FORM-A CURRENT MONITOR

Threshold current: approx. 80 to 100 mA

FORM-C AND CRITICAL FAILURE RELAY

Make and carry for 0.2 s: 30 A as per ANSI C37.90

Carry continuous: 8 A
Break (DC inductive, L/R = 40 ms):

Voltage	Current
24 V	1 A
48 V	0.5 A
125 V	0.3 A
250 V	0.2 A

Operate time: < 8 ms
Contact material: silver alloy

FAST FORM-C RELAY

Make and carry: 0.1 A max. (resistive load)
Minimum load impedance:

Input voltage	Impedance	
	2 W Resistor	1 W Resistor
250 V DC	20 KΩ	50 KΩ
120 V DC	5 KΩ	2 KΩ
48 V DC	2 KΩ	2 KΩ
24 V DC	2 KΩ	2 KΩ

Note: values for 24 V and 48 V are the same due to a required 95% voltage drop across the load impedance.

Operate time: < 0.6 ms
Internal Limiting Resistor: 100 Ω, 2 W

SOLID-STATE OUTPUT RELAY

Operate and release time: <100 µs
Maximum voltage: 265 V DC
Maximum leakage current in off state
(excluding voltage monitor circuit current): 100 µA
Maximum continuous current: 5 A at 45°C; 4 A at 65°C
Make and carry:
for 0.2 s: 30 A as per ANSI C37.90
for 0.03 s: 300 A
Breaking capacity:

Specification	UL 508	Utility application (autoreclose scheme)	Industrial application
Operations per interval	5000 operations, 1 second on, 9 seconds off	5 operations 0.2 seconds on 0.2 seconds off within 1 minute	10000 operations 0.2 seconds on 30 seconds off
	1000 operations 0.5 seconds on, 0.5 seconds off		
Break capability (0 to 250 V DC)	3.2 A at L/R = 10 ms	10 A at L/R = 40 ms	10 A at L/R = 40 ms
	1.6 A at L/R = 20 ms		
	0.8 A L/R = 40 ms		

CONTROL POWER EXTERNAL OUTPUT (For dry contact input)

Capacity: 100 mA DC at 48 V DC
Isolation: ±300 Vpk

DCMA OUTPUTS

Range: –1 to 1 mA, 0 to 1 mA, 4 to 20 mA

Max. load resistance: 12 kΩ for –1 to 1 mA range
12 kΩ for 0 to 1 mA range
600 Ω for 4 to 20 mA range
Accuracy: ±0.75% of full-scale for 0 to 1 mA range
±0.5% of full-scale for –1 to 1 mA range
±0.75% of full-scale for 0 to 20 mA range
99% Settling time to a step change: 100 ms
Isolation: 1.5 kV
Driving signal: any FlexAnalog quantity
Upper and lower limit for the driving signal: –90 to 90 pu in steps of 0.001

2.6.8 Communication protocols

IEC 61850

IEC 61850: Supports IEC 61850 Edition 2.0. See the UR Family Communications Guide and its conformance statements.

RS232 (Enhanced and basic front panels)

Front port: 19.2 kbps, Modbus RTU

USB (Graphical front panel)

Front port: USB 2.0 type B

RS485

1 rear port: up to 115 kbps, Modbus RTU, DNP 3, IEC 60870-5-103
Typical distance: 1200 m
Isolation: 2 kV, isolated together at 36 Vpk

FIBER ETHERNET PORT

Operates with 50/125 µm and 62.5/125 µm multimode fiber

Parameter	Fiber type
	100 Mb multimode
Wavelength	1310 nm
Connector	LC
Transmit power	–20 dBm
Receiver sensitivity	–30 dBm
Power budget	10 dB
Maximum input power	–14 dBm
Typical distance	2 km
Full duplex	yes
Redundancy	yes

ETHERNET (10/100 MB TWISTED PAIR)

Modes: 10 Mb, 10/100 Mb (auto-detect)
Connector: RJ45

SIMPLE NETWORK TIME PROTOCOL (SNTP)

Clock synchronization error: <10 ms (typical)

PRECISION TIME PROTOCOL (PTP)

PTP IEEE Std 1588-2008 (version 2)
Power Profile (PP) per IEEE Standard PC37.238-2011
Slave-only ordinary clock
Peer delay measurement mechanism

PARALLEL REDUNDANCY PROTOCOL (PRP)
(IEC 62439-3 CLAUSE 4, 2012)

Ethernet ports used:	2 and 3
Networks supported:	10/100 Mb Ethernet

OTHER

TFTP, SFTP, HTTP, IEC 60870-5-104, Ethernet Global Data (EGD), IEEE C37.118

2.6.9 Inter-relay communications

SHIELDED TWISTED-PAIR INTERFACE OPTIONS

Interface type	Typical distance
RS422	1200 m
G.703	100 m

NOTE

RS422 distance is based on transmitter power and does not take into consideration the clock source provided by the user.

LINK POWER BUDGET AND MAXIMUM OPTICAL INPUT POWER

The following specifications apply to filter interface modules manufactured from January 2012.

Emitter, fiber type	Cable type	Transmit power	Received sensitivity	Power budget	Maximum optical input power
820 nm, Multimode	62.5/125 µm	-16 dBm	-32 dBm	16 dBm	-8 dBm
	50/125 µm	-20 dBm		12 dBm	
1300 nm, Multimode	62.5/125 µm	-16 dBm	-32 dBm	16 dBm	-8 dBm
	50/125 µm	-20 dBm		12 dBm	
1300 nm, Single mode	9/125 µm	-15 dBm	-32 dBm	17 dBm	-8 dBm
1300 nm Laser, Single mode	9/125 µm	0 dBm	-34 dBm	34 dBm	-8 dBm
1550 nm Laser, Single mode	9/125 µm	5 dBm	-34 dBm	39 dBm	-10 dBm

The following specifications apply to filter interface modules implemented before January 2012.

Emitter, fiber type	Transmit power	Received sensitivity	Power budget	Maximum optical input power
820 nm LED, Multimode	–20 dBm	–30 dBm	10 dB	–7.6 dBm
1300 nm LED, Multimode	–21 dBm	–30 dBm	9 dB	–11 dBm
1300 nm ELED, Single mode	–23 dBm	–32 dBm	9 dB	–14 dBm
1300 nm Laser, Single mode	–1 dBm	–30 dBm	29 dB	–14 dBm
1550 nm Laser, Single mode	+5 dBm	–30 dBm	35 dB	–14 dBm

NOTE

The power budgets are calculated from the manufacturer's worst-case transmitter power and worst case receiver sensitivity.

The power budgets for the 1300 nm ELED are calculated from the manufacturer's transmitter power and receiver sensitivity at ambient temperature. At extreme temperatures these values deviate based on component tolerance. On average, the output power decreases as the temperature is increased by a factor of 1 dB / 5 °C.

2

TYPICAL LINK DISTANCE

Emitter, fiber type	Cable type	Connector type	Typical distance	
			Before January 2012	From January 2012
820 nm LED, multimode	62.5/125 µm	ST	1.65 km	2 km
	50/125 µm	ST	1.65 km	2 km
1300 nm LED, multimode	62.5/125 µm	ST	4 km	5 km
	50/125 µm	ST	4 km	5 km
1300 nm ELED, single mode	9/125 µm	ST	11.4 km	20 km
1300 nm Laser, single mode	9/125 µm	ST	64 km	65 km
1550 nm Laser, single mode	9/125 µm	ST	105 km	125 km

NOTE

Typical distances listed are based on the following assumptions for system loss. As actual losses vary from one installation to another, the distance covered by your system can vary.

CONNECTOR LOSSES (Total of both ends)

ST connector: 0.7 dB (each)

FIBER LOSSES

820 nm multimode: 3 dB/km
1300 nm multimode: 1 dB/km
1300 nm single mode: 0.35 dB/km
1550 nm single mode: 0.25 dB/km
Splice losses: one splice every 2 km at 0.05 dB loss per splice

SYSTEM MARGIN

3 dB additional loss added to calculations to compensate for all other losses.

Compensated difference in transmitting and receiving (channel asymmetry) channel delays using GPS satellite clock: 10 ms

2.6.10 CyberSentry security

OPTIONS

Software options: Level 1

2.6.11 Graphical front panel

DISPLAY

Type: color graphical back-lit LCD display
Size: 7 inches (17.8 cm)
Resolution: 800 by 480 pixels
Pages: 5 single-line diagram pages with controls, status, and metering values
up to 8 annunciator pages with total of 96 annunciator windows
1 phasor metering page for each AC Source
5 tabular metering pages with dynamic metering and status
event records page with dynamic update
product information page
settings, actual values, error messages (targets)

LED INDICATORS

Functions:	5 device status indicators 9 event cause indicators 8 user-programmable pushbutton indicators

PUSHBUTTONS

Type:	membrane
Functions:	5 bottom Tab pushbuttons and 1 Home pushbutton for page recall 4 directional, 1 ENTER, and 1 ESCAPE pushbutton element selection 10 side pushbuttons for power system element control RESET pushbutton 8 physical user-programmable pushbuttons, 8 graphical interface pushbuttons

INGRESS PROTECTION

IP code:	IP40 front (IP54 front with IP54 mounting collar accessory) IP10 back (IP20 back with IP20 cover accessory)

2.6.12 Environmental

AMBIENT TEMPERATURES

Maximum operating range:	–40 to 85°C
Continuous operating range:	–40 to 60°C[1]

1 Based on IEC 60068-2-1 and IEC 60068-2-2, Variant Bd and Ad for 16 hrs. The UR can operate up to a surrounding ambient of 85°C, however operating outside the recommended continuous temperature range for extended periods can result in MTBF degradation and decrease the response time of the LCD.

HUMIDITY

Humidity:	operating up to 95% (non-condensing) at 55°C (as per IEC60068-2-30 variant 1, 6 days)

OTHER

Altitude:	2000 m (maximum)
Pollution degree:	II
Overvoltage category:	II
Ingress protection:	IP20 front, IP10 back (basic front panel and Rev. 1 enhanced front panel) IP40 front, IP10 back (Rev. 2 enhanced front panel) IP54 front with IP54 mounting collar accessory (Rev. 2 enhanced front panel)
Ingress protection with IP20 cover accessory:	IP20 back
Noise:	0 dB

2

2.6.13 Type tests

L90 TYPE TESTS

Test	Reference standard	Test level
Dielectric voltage withstand	EN 60255-5[1]	2.2 kV
Impulse voltage withstand	EN 60255-5[1]	5 kV
Damped oscillatory	IEC 61000-4-18 / IEC 60255-22-1	2.5 kV CM, 1 kV DM
Electrostatic discharge	EN 61000-4-2 / IEC 60255-22-2	Level 3
RF immunity	EN 61000-4-3 / IEC 60255-22-3	Level 3
Fast transient disturbance	EN 61000-4-4 / IEC 60255-22-4	Class A and B
Surge immunity	EN 61000-4-5 / IEC 60255-22-5	Level 3 and 4
Conducted RF immunity	EN 61000-4-6 / IEC 60255-22-6	Level 3
Power frequency immunity	EN 61000-4-7[1] / IEC 60255-22-7	Class A and B
Voltage interruption and ripple DC	IEC 60255-11	12% ripple, 200 ms interrupts
Radiated and conducted emissions	CISPR11 / CISPR22 / IEC 60255-25	Class A
Sinusoidal vibration	IEC 60255-21-1	Class 1
Shock and bump	IEC 60255-21-2	Class 1
Seismic	IEC 60255-21-3	Class 1
Power magnetic immunity	IEC 61000-4-8	Level 5
Pulse magnetic immunity	IEC 61000-4-9	Level 4
Damped magnetic immunity	IEC 61000-4-10	Level 4
Voltage dip and interruption	IEC 61000-4-11	0, 40, 70, 80% dips; 250 / 300 cycle interrupts
Damped oscillatory	IEC 61000-4-12[1]	2.5 kV CM, 1 kV DM
Conducted RF immunity, 0 to 150 kHz	IEC 61000-4-16	Level 4
Voltage ripple	IEC 61000-4-17	15% ripple
Ingress protection	IEC 60529[1]	IP20 front, IP10 back
Cold	IEC 60068-2-1	–40°C for 16 hours
Hot	IEC 60068-2-2	85°C for 16 hours
Humidity	IEC 60068-2-30	6 days, variant 1
Damped oscillatory	IEEE/ANSI C37.90.1	2.5 kV, 1 MHz
RF immunity	IEEE/ANSI C37.90.2	20 V/m, 80 MHz to 1 GHz
Safety	UL 508	e83849 NKCR
		Section 43 - Temperature test Energization of Contact Inputs and/or Contact Outputs for continuous duty is not to exceed a total of 31 W of power
Safety	UL C22.2-14	e83849 NKCR7
Safety	UL 1053	e83849 NKCR
Safety	IEC 60255-27	Insulation: class 1, Pollution degree: 2, Over voltage cat II

1 Not tested by third party.

2.6.14 Production tests

THERMAL

Products go through an environmental test based upon an Accepted Quality Level (AQL) sampling process.

2.6.15 Approvals

APPROVALS

Compliance	Applicable council directive	According to
CE	Low voltage directive	EN 60255-5
	EMC directive	EN 60255-26 / EN 50263
		EN 61000-6-5
C-UL-US	---	UL 508
		UL 1053
		C22.2 No. 14

2.6.16 Maintenance

MOUNTING

Attach mounting brackets using 20 inch-pounds (±2 inch-pounds) of torque.

CLEANING

Normally, cleaning is not required. When dust has accumulated on the front panel display, wipe with a dry cloth.

NOTICE To avoid deterioration of electrolytic capacitors, power up units that are stored in a de-energized state once per year, for one hour continuously.

L90 Line Current Differential System

Chapter 3: Installation

This chapter outlines installation of hardware and software. You unpack, check, mount, wire the unit, turn on power, then install the software and configure settings.

3.1 Unpack and inspect

Use this procedure to unpack and inspect the unit.

1. Open the relay package and check that the following items have been delivered:
   - L90
   - Mounting screws
   - GE EnerVista™ DVD (software and documentation)
   - L90 Instruction Manual (soft copy on DVD; printed copy if ordered)
   - UR Family Communications Guide (soft copy on DVD; printed copy if Instruction Manual ordered)
   - Certificate of Calibration
   - Test Report
   - EC Declaration of Conformity
   - Front panel label package
2. Inspect the unit for physical damage.
3. View the rear nameplate and verify that the correct model has been delivered. The model number is at the top right.

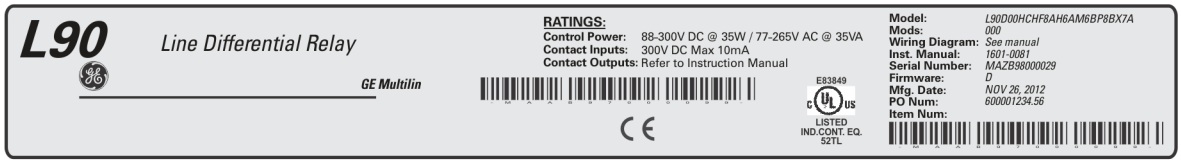

831795A3.CDR

4. Any protective plastic film on the front panel is normally peeled off, but also can be left on.
5. For any issues, contact GE as outlined in the For Further Assistance section in chapter 1.
6. Check that you have the latest copy of the L90 Instruction Manual and the UR Family Communications Guide, for the applicable firmware version, at http://www.gegridsolutions.com/multilin/manuals/index.htm

The Instruction Manual outlines how to install, configure, and use the unit. The Communications Guide is for advanced use with communication protocols. The warranty is included at the end of this instruction manual and on the GE Grid Solutions website.

3.2 Panel cutouts

This section does not apply to the HardFiber Brick; see its instruction manual.

Install the relay in an indoor environment within the environmental specifications. The relay complies with Pollution Category II, which means installation in an office, laboratory, or testing environment.

3.2.1 Horizontal units

The L90 is available as a 19-inch rack horizontal mount unit with a removable front panel. The front panel is specified as enhanced, basic, or graphical at the time of ordering. The enhanced and graphical front panels contain additional user-programmable pushbuttons and LED indicators.

The modular design allows the relay to be upgraded and repaired by qualified service personnel. The front panel is hinged to allow access to the modules. The front panel is itself removable to allow mounting on doors with limited rear depth and for upgrading.

In November 2017, GE began transitioning to Rev. 2 of the enhanced horizontal front panel. This panel can be identified by the use of a screw instead of a knob to close the panel. It can conform to an IP54 rating with the IP54 mounting collar purchased separately. The IP54 mounting collar can be used in panel-mount installations, not 19-inch rack-mount installations. The IP54 mounting collar cannot be used with Rev. 1 enhanced front panels.

The case dimensions are shown in the following figures, along with panel cutout details for panel mounting. When planning the location of your panel cutout, ensure that provision is made for the front panel to swing open without interference to or from adjacent equipment.

The relay must be mounted such that the front panel sits semi-flush with the panel or switchgear door, allowing the operator access to the keypad and the front communications port.

Figure 3-1: Horizontal dimensions (Rev. 1 enhanced front panel)

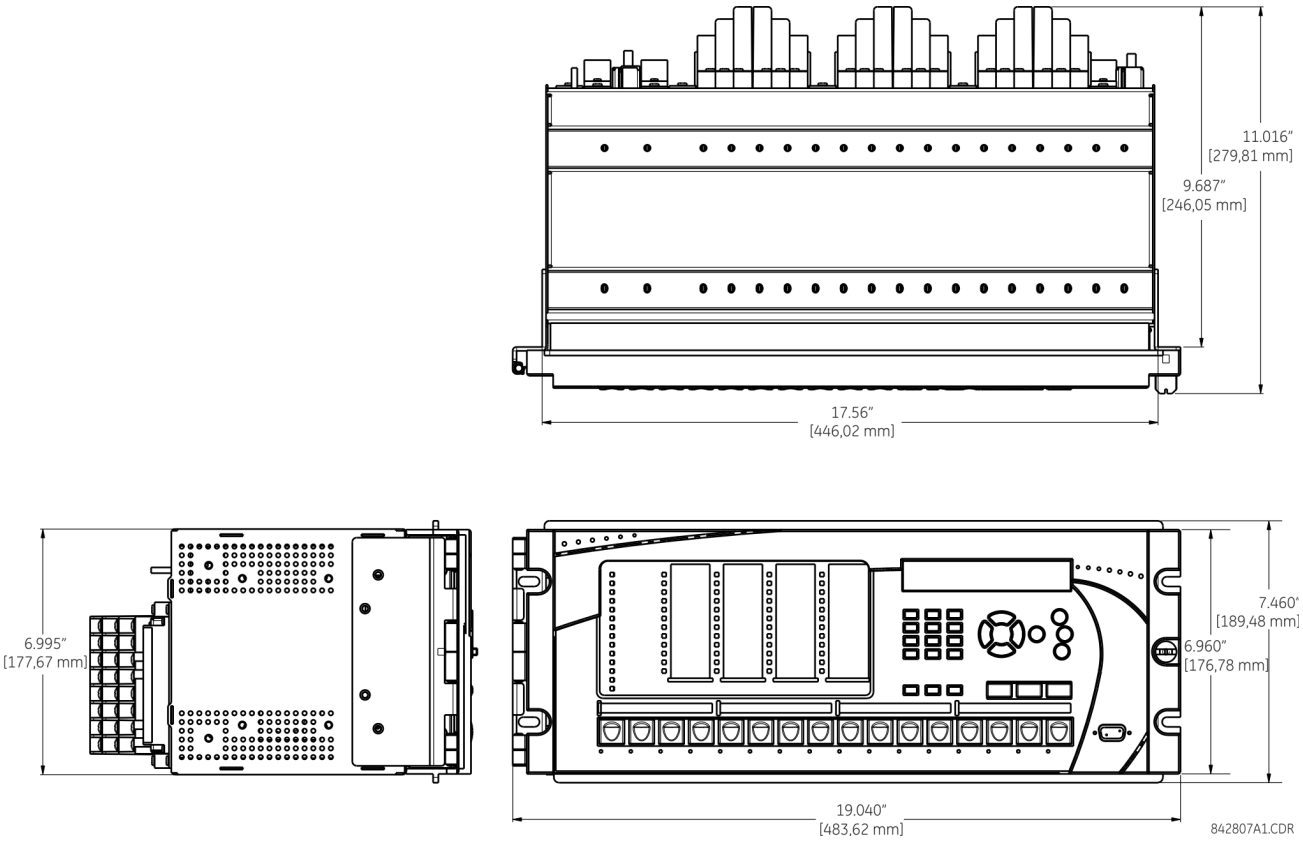

3

Figure 3-2: Horizontal dimensions (Rev. 2 enhanced front panel)

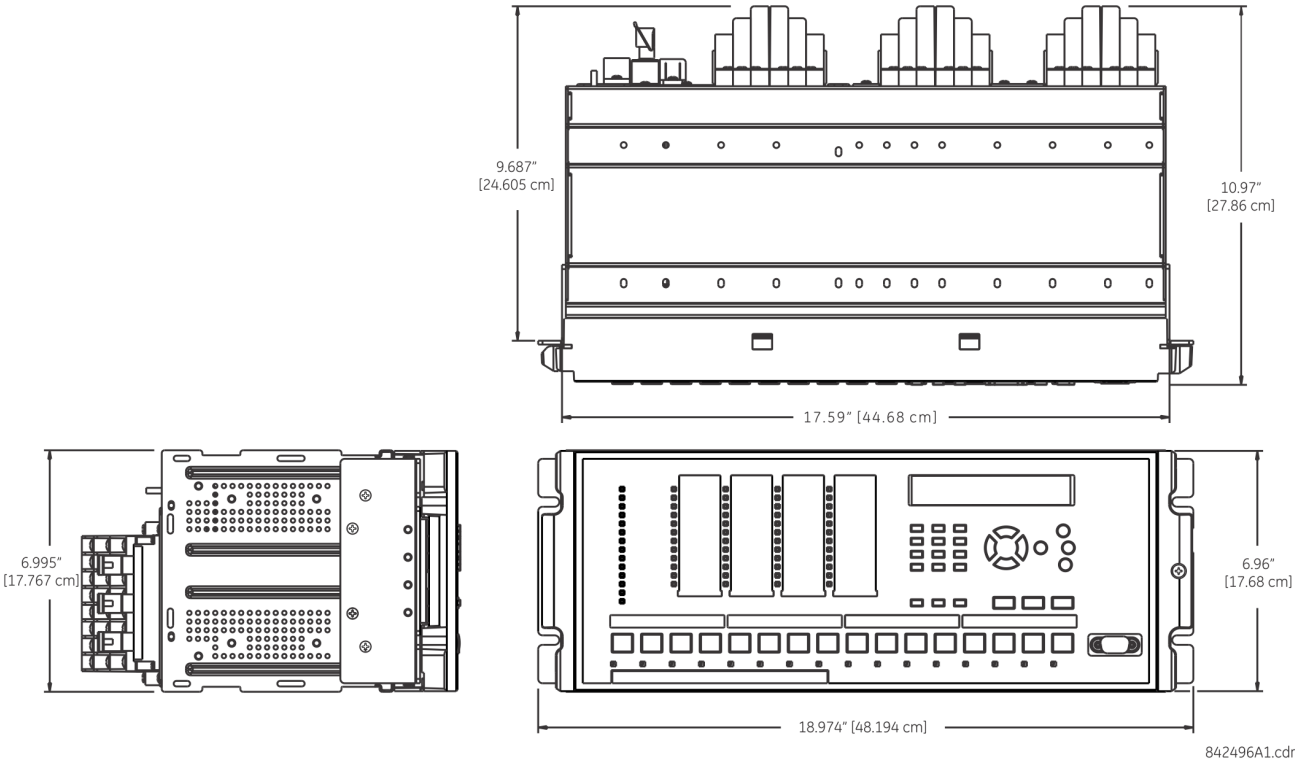

Figure 3-3: Horizontal mounting (enhanced and graphical front panels)

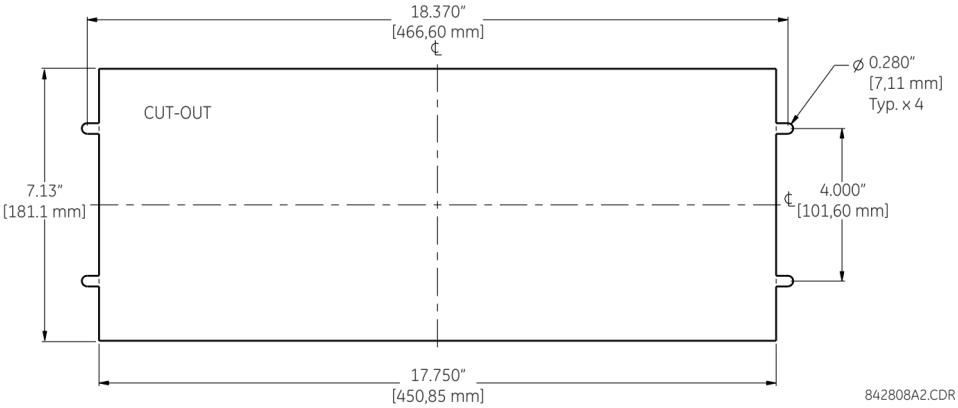

Figure 3-4: Horizontal dimensions and mounting (basic front panel)

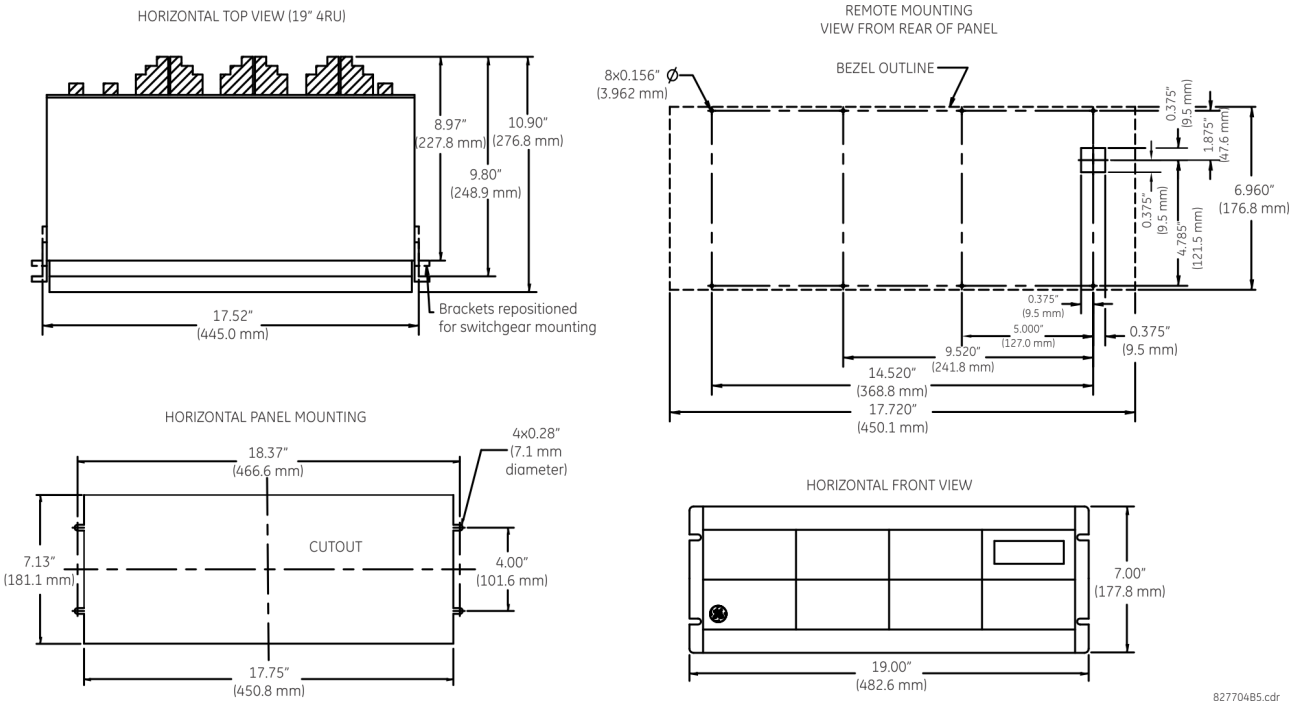

Figure 3-5: Horizontal dimensions (graphical front panel)

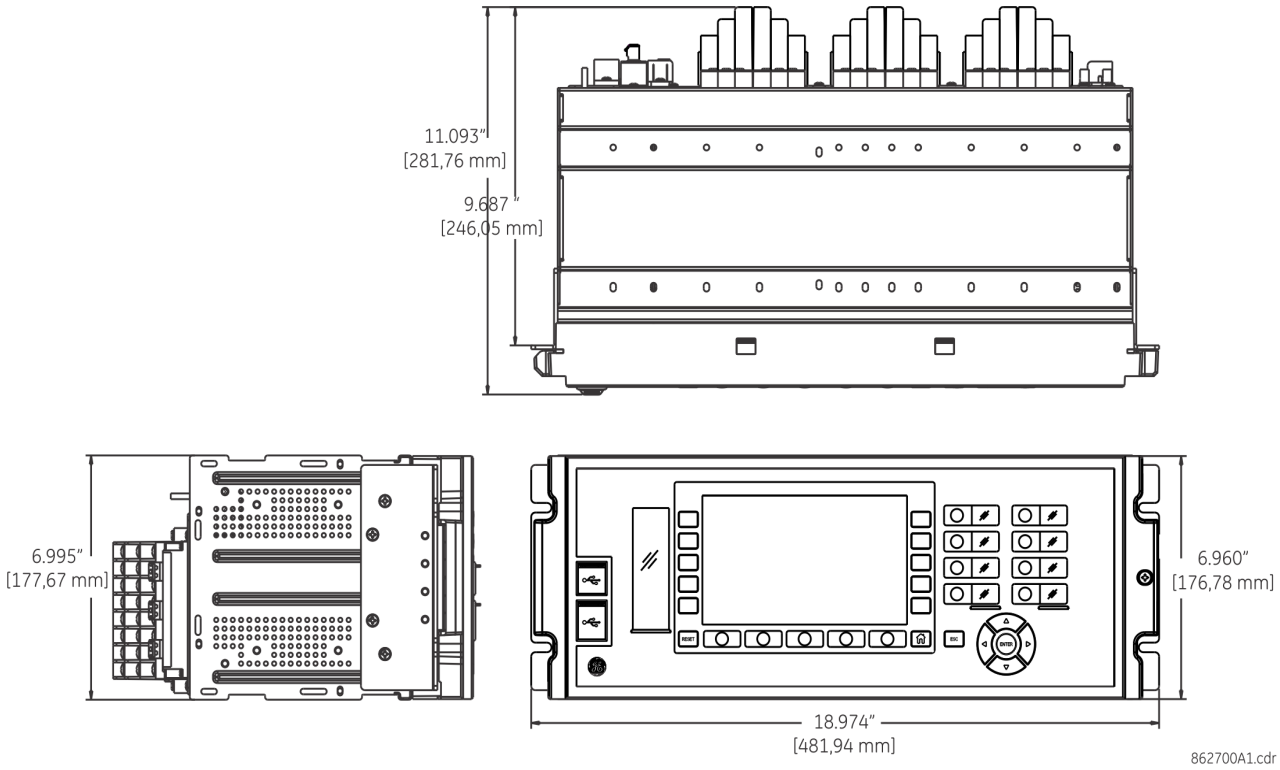

3

Figure 3-6: Horizontal dimensions (IP54 mounting collar)

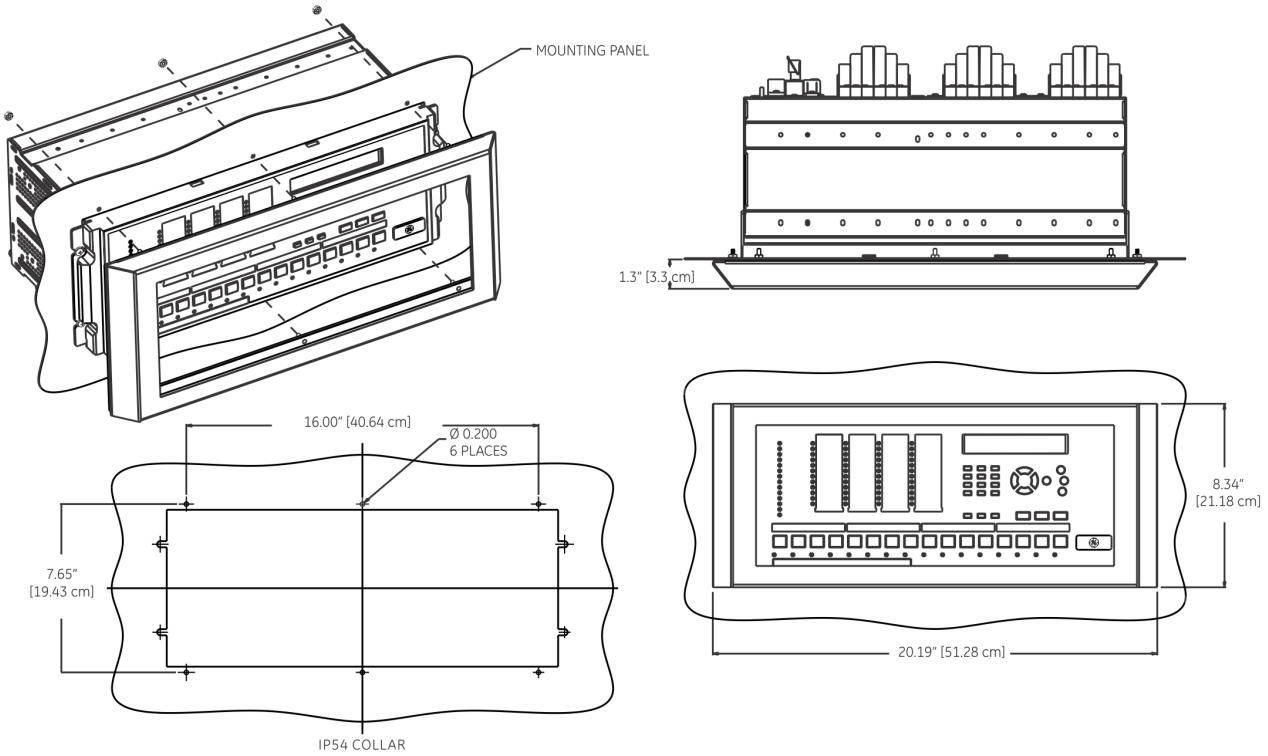

NOTES
1. INSPECT THE COLLAR BEFORE INSTALLATION, VERIFY GASKET IS ADHERED TO THE METAL ON ALL SIDES
2. MAKE SURE THE RELAY IS POSITIONED CENTER TO THE CUT OUT
3. INSTALL IP-54 COLLAR, CONFIRM THE GASKET PROPERLY MATES WITH THE PANEL ON ALL SIDES
SECURE USING #8-32 HEX NUT AT 6 PLACES.

842497A1.cdr

3.2.2 Vertical units

The L90 is available as a reduced size (¾) vertical mount unit, with a removable front panel. The front panel is specified as enhanced or basic at the time of ordering. The enhanced front panel contains additional user-programmable pushbuttons and LED indicators.

The modular design allows the relay to be upgraded and repaired by qualified service personnel. The front panel is hinged to allow easy access to the modules. The front panel is itself removable to allow mounting on doors with limited rear depth and for upgrading.

The case dimensions are shown in the following figures, along with panel cutout details for panel mounting. When planning the location of your panel cutout, ensure that provision is made for the front panel to swing open without interference to or from adjacent equipment.

The relay must be mounted such that the front panel sits semi-flush with the panel or switchgear door, allowing the operator access to the keypad and the RS232 communications port.

Figure 3-7: Vertical dimensions and mounting (enhanced front panel)

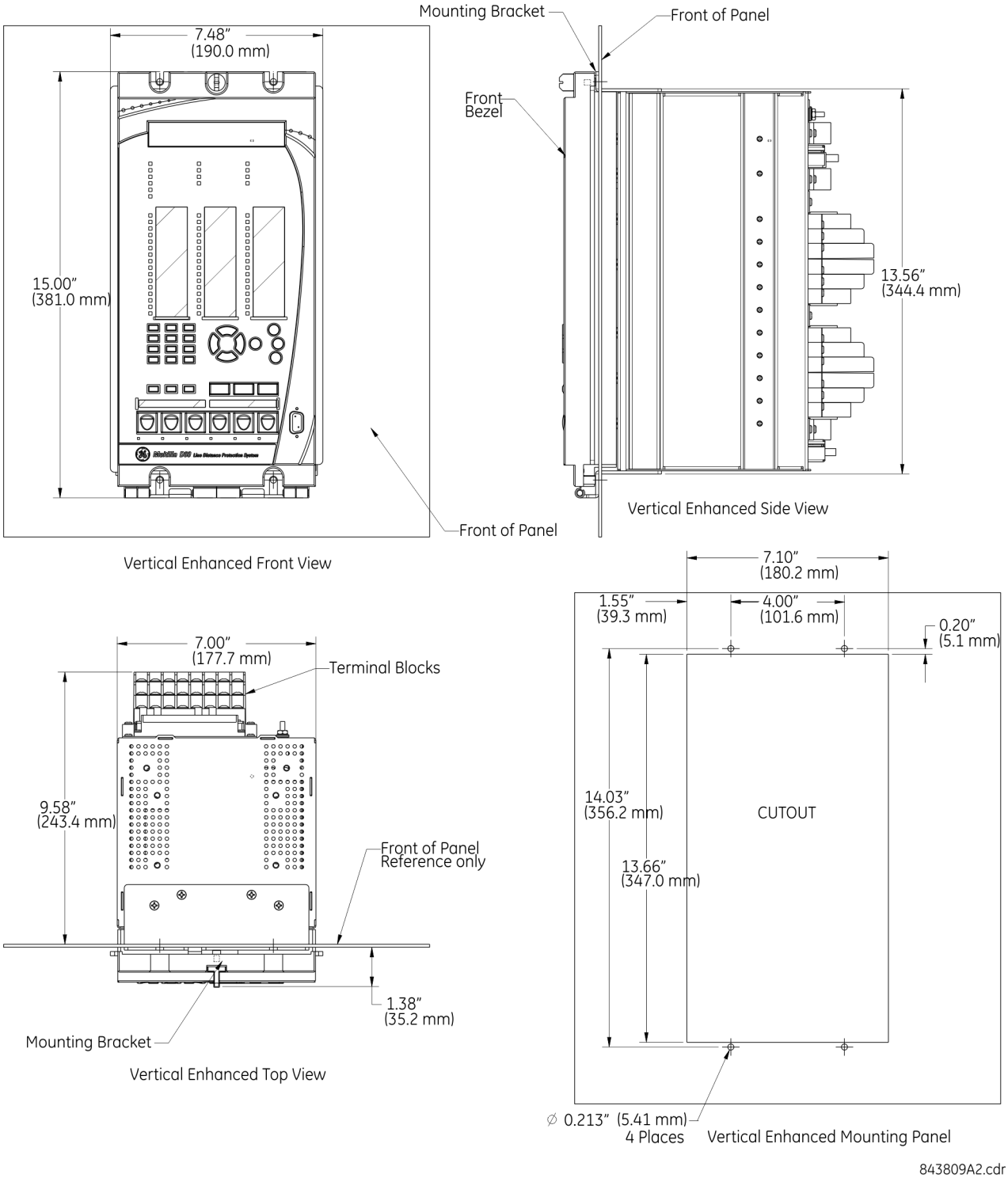

3

Figure 3-8: Vertical dimensions and mounting (basic front panel)

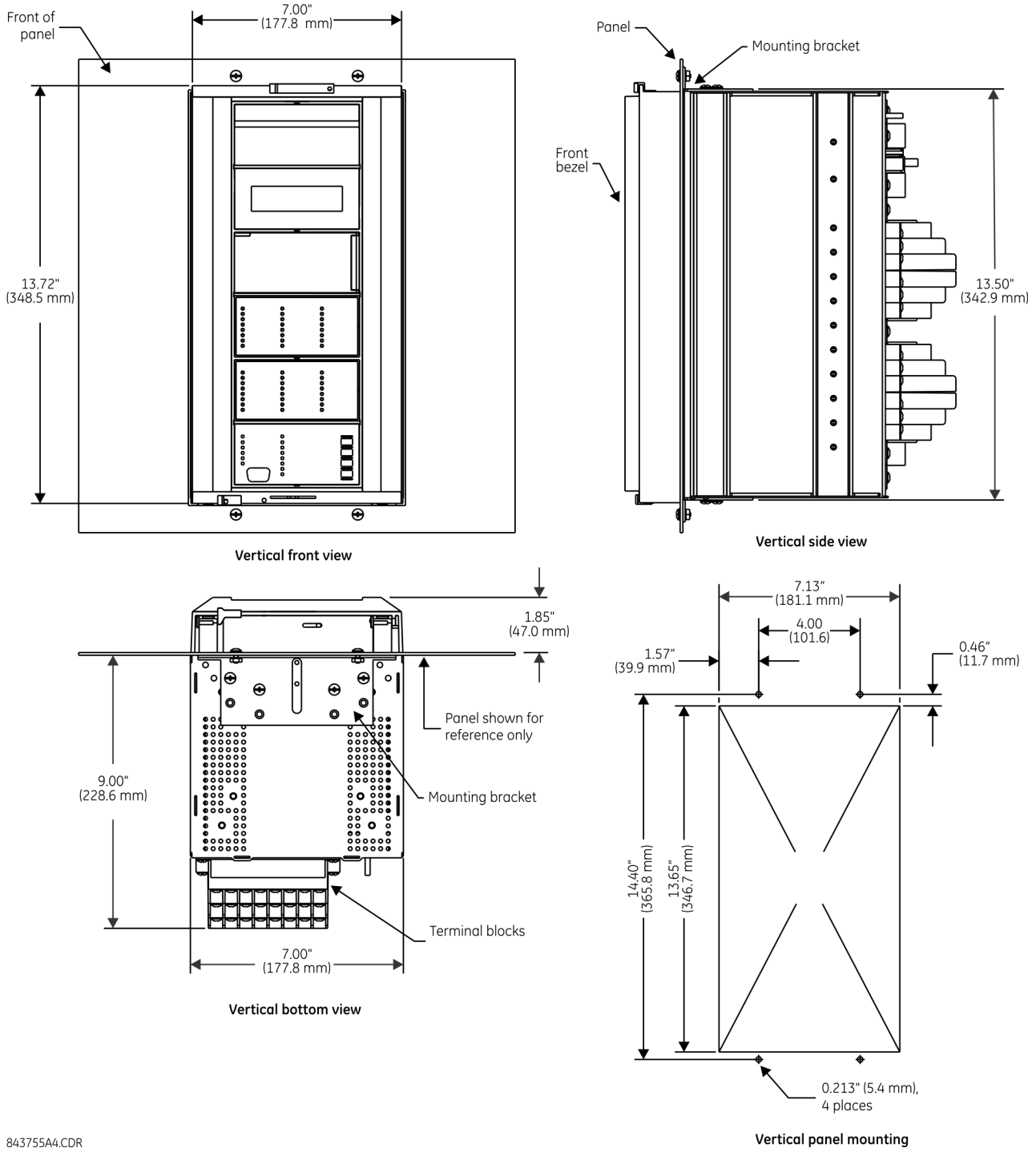

For side-mounting L90 devices with the enhanced front panel, see the following documents available on the UR DVD and the GE Grid Solutions website:

- GEK-113180 — UR-Series UR-V Side-Mounting Front Panel Assembly Instructions
- GEK-113181 — Connecting a Remote UR-V Enhanced Front Panel to a Vertical UR Device Instruction Sheet
- GEK-113182 — Connecting a Remote UR-V Enhanced Front Panel to a Vertically-Mounted Horizontal UR Device Instruction Sheet

For side-mounting L90 devices with the basic front panel, use the following figures.

Figure 3-9: Vertical side-mounting installation (basic front panel)

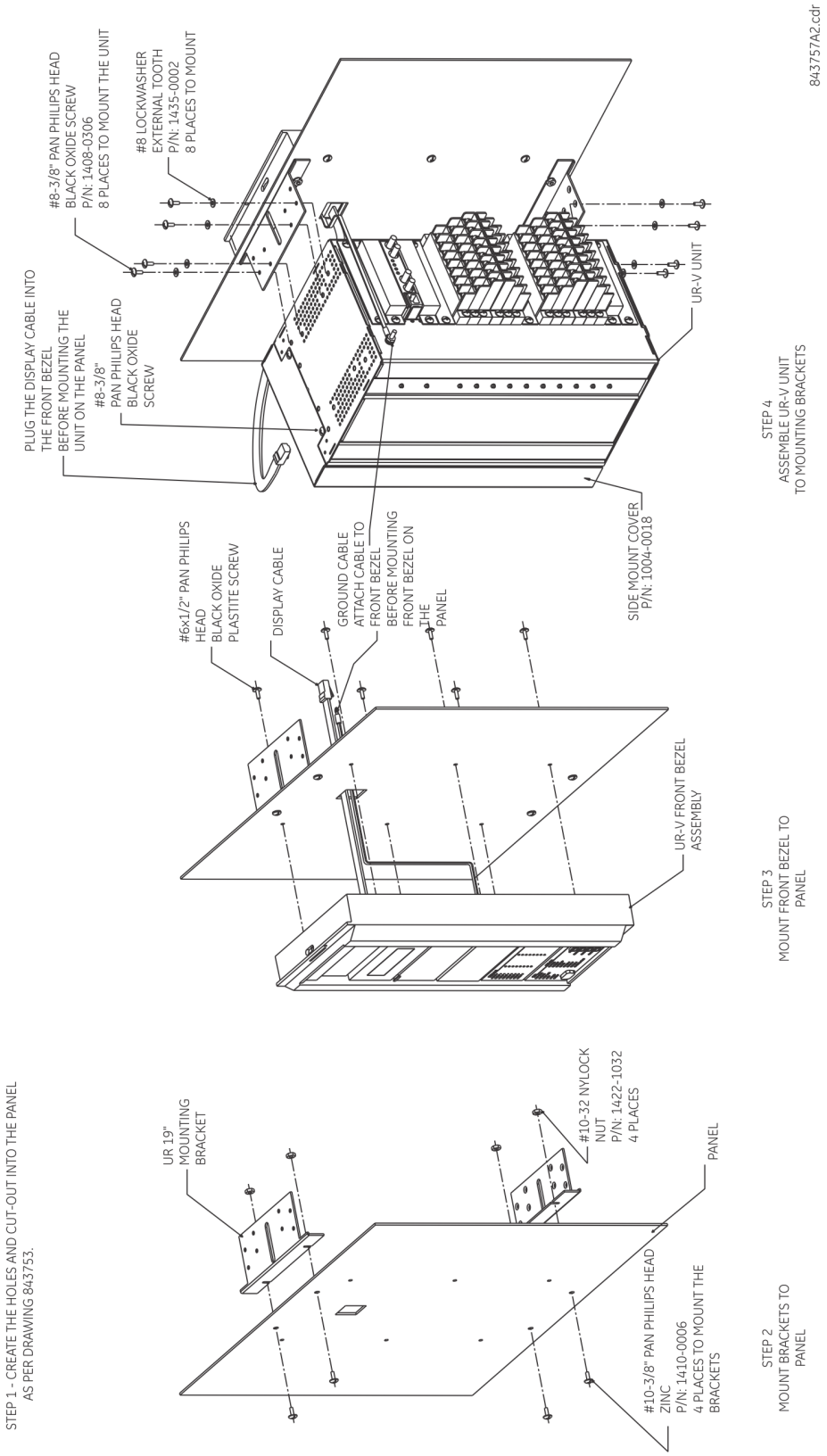

3

Figure 3-10: Vertical side-mounting rear dimensions (basic front panel)

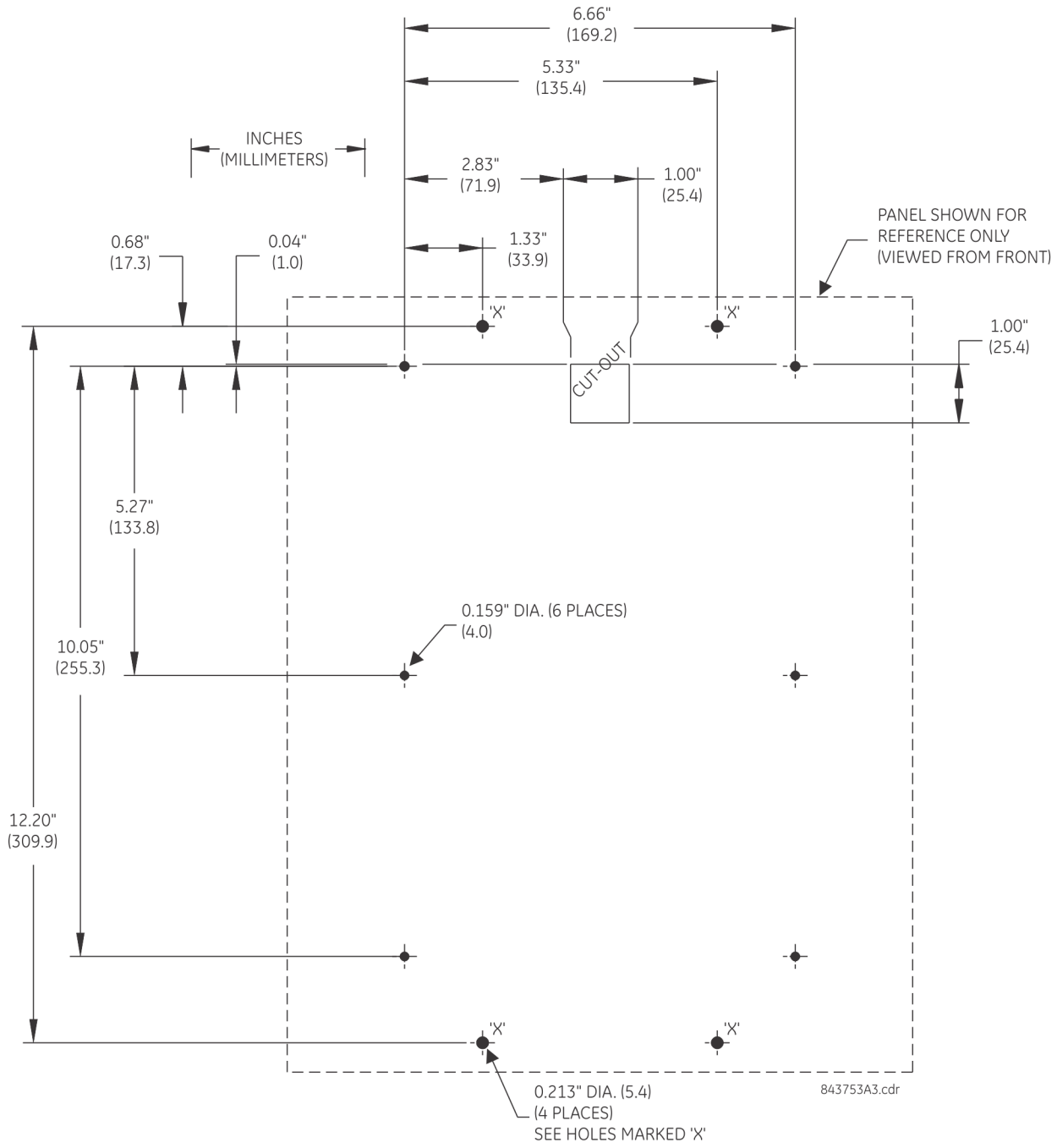

3.2.3 Rear terminal layout

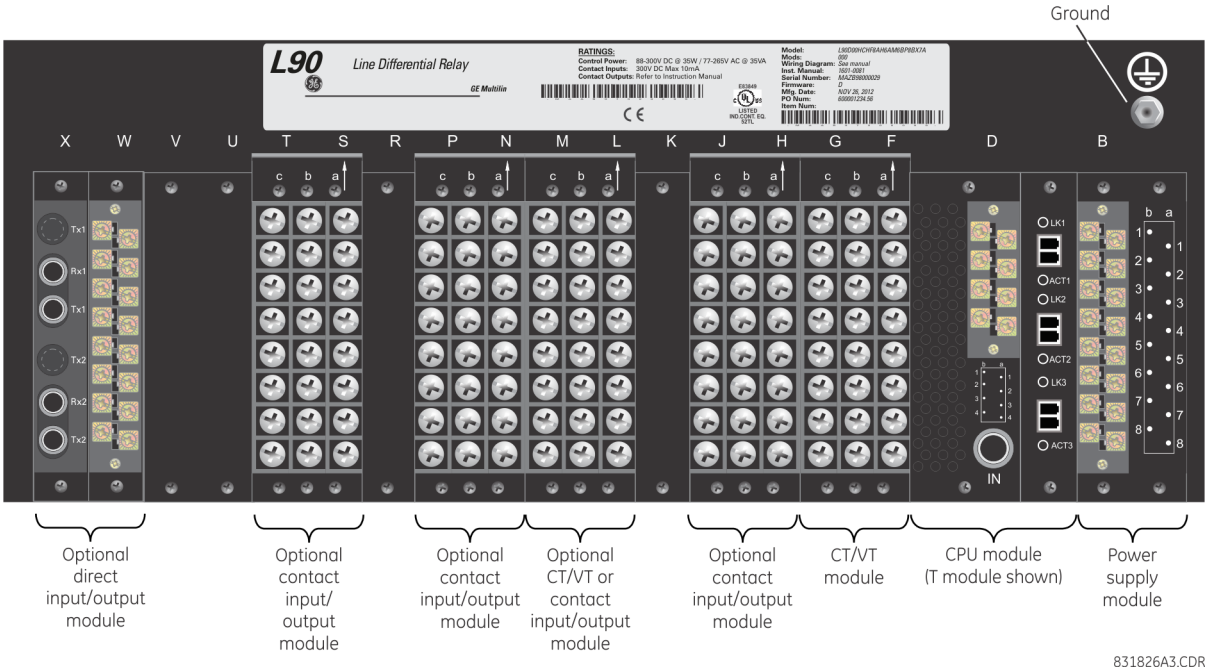

WARNING **Do not touch any rear terminals while the relay is energized, else death or serious injury can result from electrical shock.**

NOTICE Small form-factor pluggable ports (SFPs) are pluggable transceivers. They transmit, receive, and convert electrical signals to optical signals and vice-versa. They are inserted into the Ethernet ports on the CPU module. A photo in the Maintenance chapter shows this plug-in device. Do not use non-validated transceivers or install validated transceivers in the wrong Ethernet slot, else damage can occur.

The relay follows a convention for terminal number assignments, which are three characters long and assigned by module slot position, row number, and column letter. Two-slot wide modules take their slot designation from the first slot position (nearest to CPU module), indicated by an arrow on the terminal block. The figure shows an example of rear terminal assignments.

3

Figure 3-11: Example of modules in F and H slots

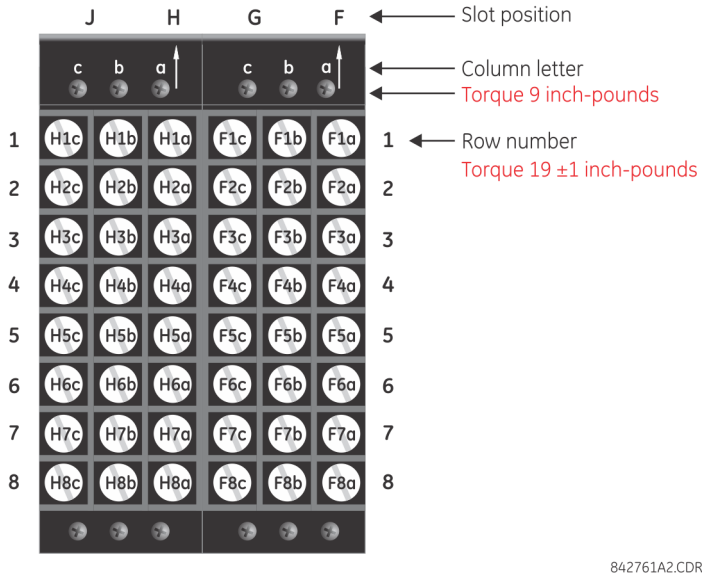

The torque used to connect the screws that connect the terminal blocks (top screws a, b, c) and the metal plates over empty slots to the chassis is 9 inch-pounds. For the screws used to wire the terminal blocks (rows 1 to 8), use 19±1 inch-pounds. During manufacturing, the power supply and CPU modules are installed in slots B and D of the chassis with 13 inch-pounds of torque on the screws at the top and bottom of the modules. Wire connections to these two modules at 13 inch-pounds.

Figure 3-12: CPU modules and power supply

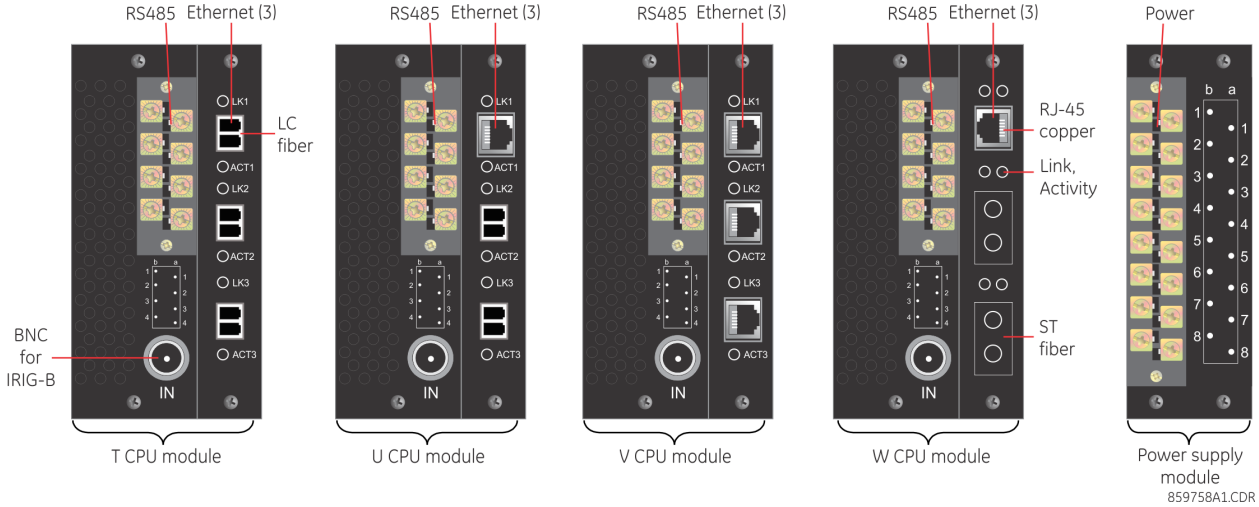

The following figure shows the optical connectors for CPU modules.

Figure 3-13: LC fiber connector (left) and ST fiber connector (right)

3

3.3 Wiring

3.3.1 Typical wiring

Figure 3-14: Typical wiring diagram (T module shown for CPU)

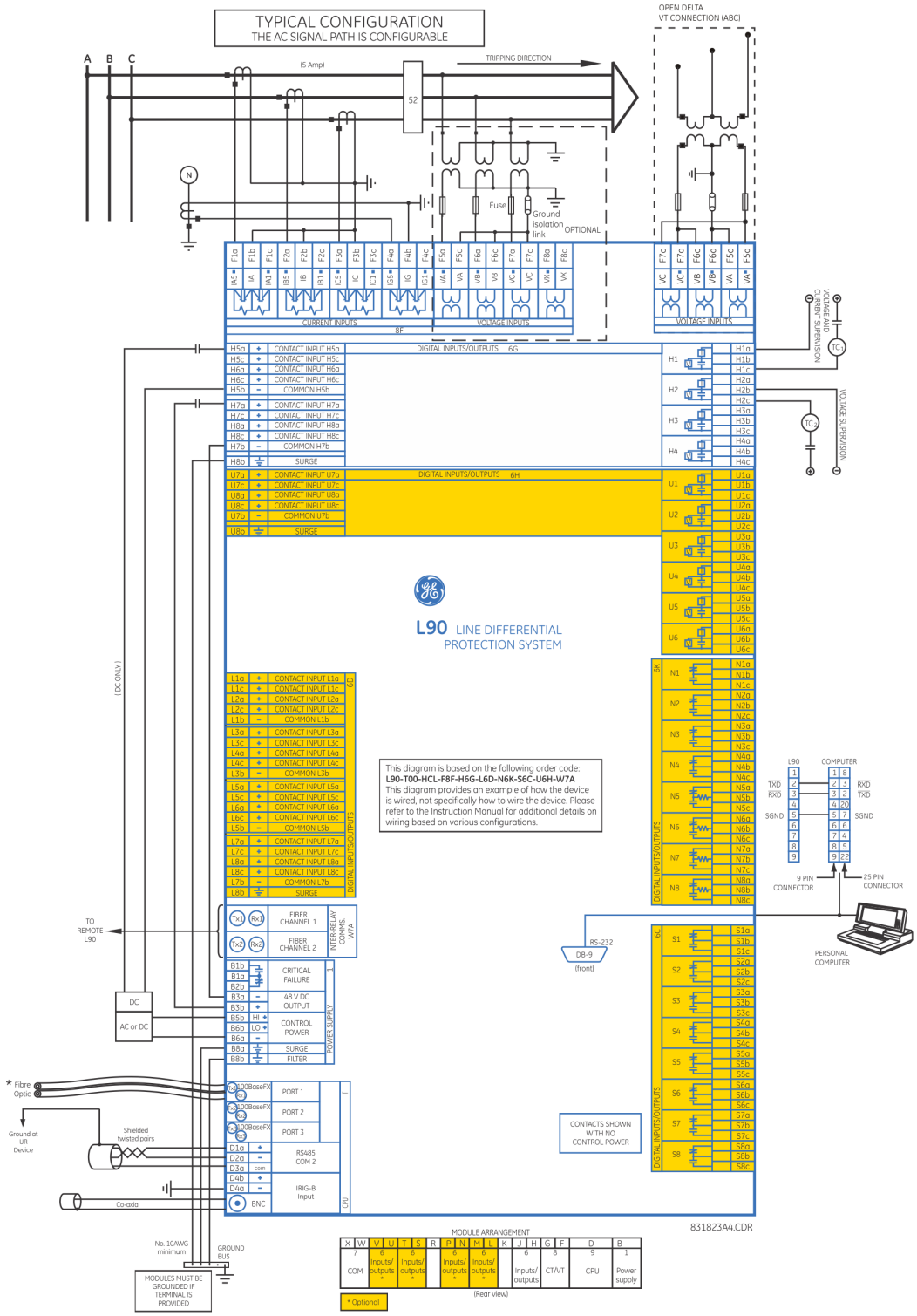

3.3.2 Dielectric strength

Dielectric strength is the maximum electric strength that can be sustained without breakdown. It is measured in volts.

The table shows the dielectric strength of the UR-series module hardware.

Table 3-1: Dielectric strength of UR series modules

Module type	Module function	Terminals		Dielectric strength
		From	To	
1	Power supply	High (+); Low (+); (–)	Chassis	2000 V AC for 1 minute
1	Power supply	48 V DC (+) and (–)	Chassis	2000 V AC for 1 minute
1	Power supply	Relay terminals except terminals 8a and 8b	Chassis	2000 V AC for 1 minute
2	Reserved	N/A	N/A	N/A
3	Reserved	N/A	N/A	N/A
4	Digital contact inputs/ outputs	All	Chassis	2000 V AC for 1 minute
5	Analog inputs/outputs	All except 8b	Chassis	< 50 V DC
6	Digital contact inputs/ outputs	All	Chassis	2000 V AC for 1 minute
7	G.703	All except 2b, 3a, 7b, 8a	Chassis	2000 V AC for 1 minute
	RS422	All except 6a, 7b, 8a	Chassis	< 50 V DC
8	CT/VT	All	Chassis	2000 V AC for 1 minute
9	CPU	All	Chassis	2000 V AC for 1 minute

NOTICE Filter networks and transient protection clamps are used in the hardware to prevent damage caused by high peak voltage transients, radio frequency interference (RFI), and electromagnetic interference (EMI). These protective components can be damaged by application of the ANSI/IEEE C37.90 specified test voltage for longer than the specified minute.

3.3.3 Control power

NOTICE Power supplied to the relay must be connected to the matching power supply range of the relay. If incorrect voltage is applied or voltage is applied to the wrong terminals, damage can occur.

The L90, like almost all electronic relays, contains electrolytic capacitors. These capacitors are well-known to deteriorate over time if voltage is not applied periodically. Deterioration can be avoided by powering up the relay at least once a year.

The power supply module can be ordered for two possible voltage ranges, and the L90 can be ordered with or without a redundant power supply module option. Each range has a dedicated input connection for proper operation. The ranges are as follows (see the Specifications section of chapter 2 for details):

- Low (LO) range — 24 to 48 V (DC only) nominal
- High (HI) range — 125 to 250 V nominal

The power supply module provides power to the relay and supplies power for dry contact input connections.

The power supply module provides 48 V DC power for dry contact input connections and a critical failure relay (see the Typical Wiring Diagram earlier). The critical failure relay is a form-C device that is energized once control power is applied and the relay has successfully booted up with no critical self-test failures. If ongoing self-test diagnostic checks detect a critical failure (see the Self-Test Errors section in chapter 7) or control power is lost, the relay de-energizes.

To connect power to the relay, 14 gauge stranded wire with disconnect devices is recommended. Connect all wires to the relay before turning on power.

For high-reliability systems, the L90 has a redundant option in which two L90 power supplies are placed in parallel on the bus. If one of the power supplies becomes faulted, the second power supply assumes the full load of the relay without any interruptions. Each power supply has a green LED on the front of the module to indicate that it is functional. The critical fail relay of the module also indicates a faulted power supply.

An LED on the front of the control power module shows the status of the power supply, as outlined in the table.

Table 3-2: Power supply LED on module

LED indication	Power supply
Continuous on	OK
On/off cycling	Failure
Off	Failure or no power

Figure 3-15: Control power connection

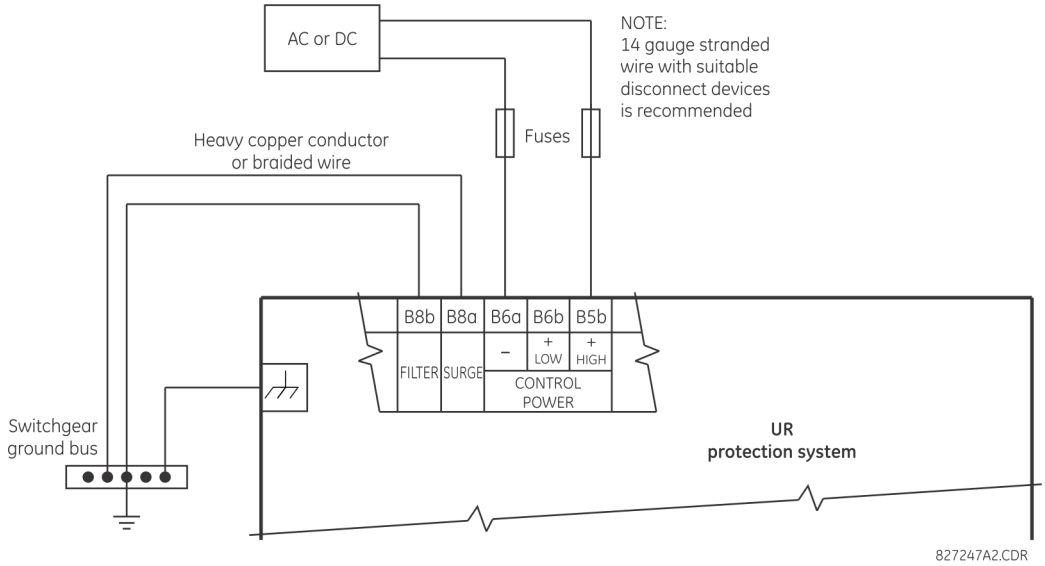

3.3.3.1 Non-volatile data storage

Non-volatile data is temporary data required after a power cycle for relay state, such as latch status before reboot. The relay saves this data in non-volatile storage every two minutes or when a state change occurs.

If a state change occurs just before a power down (less than two minutes) and the relay power is cycled, some temporary data can be saved and the prior state is retained at power up. Otherwise, a two-minute powered on period after a state change ensures that all temporary state changes required after reboot have been saved. A command also is available to initiate saving of data in the compact flash memory using **Commands > Relay Maintenance > Save Volatile Data**.

3.3.4 CT/VT modules

The CT and VT inputs are analog current transformer and voltage transformer signals used to monitor AC power lines. The UR-series relays support 1 A and 5 A CTs.

A CT/VT module can have current or voltage inputs on channels 1 through 4 inclusive, or channels 5 through 8 inclusive. Channels 1 and 5 are intended for connection to phase A, and are labelled as such in the relay. Likewise, channels 2 and 6 are intended for connection to phase B, and channels 3 and 7 are intended for connection to phase C.

Channels 4 and 8 are intended for connection to a single-phase source. For voltage inputs, these channels are labelled as auxiliary voltage (VX). For current inputs, these channels are intended for connection to a CT between system neutral and ground, and are labelled as ground current (IG).

NOTICE Verify that the connection made to the relay terminals for nominal current of 1 A or 5 A matches the secondary rating of the connected CTs. Unmatched CTs can result in equipment damage or inadequate protection.

To connect to the module, size 12 American Wire Gauge (AWG) is used commonly; the maximum size is 10 AWG.

CT/VT modules can be ordered with a standard ground current input that is the same as the phase current input. Each AC current input has an isolating transformer and an automatic shorting mechanism that shorts the input when the module is withdrawn from the chassis. There are no internal ground connections on the current inputs. Current transformers with 1 to 50000 A primaries and 1 A or 5 A secondaries can be used.

These modules have enhanced diagnostics that can automatically detect CT/VT hardware failure and take the relay out of service.

CT connections for both ABC and ACB phase rotations are identical, as shown in the Typical Wiring Diagram.

The exact placement of a zero-sequence core balance CT to detect ground fault current is shown as follows. Twisted-pair cabling on the zero-sequence CT is recommended.

Figure 3-16: Zero-sequence core balance CT installation

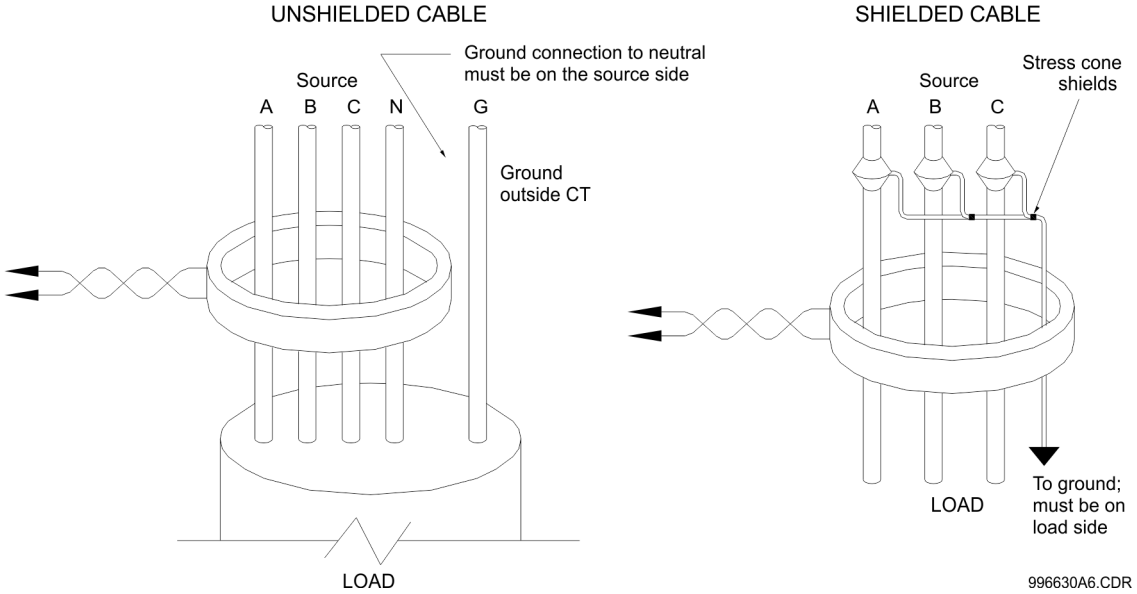

The phase voltage channels are used for most metering and protection purposes. The auxiliary voltage channel is used as input for the synchrocheck and volts-per-hertz features, which are optional features for some UR models.

NOTE Substitute the tilde "~" symbol with the slot position of the module in the following figure.

Figure 3-17: CT/VT module wiring

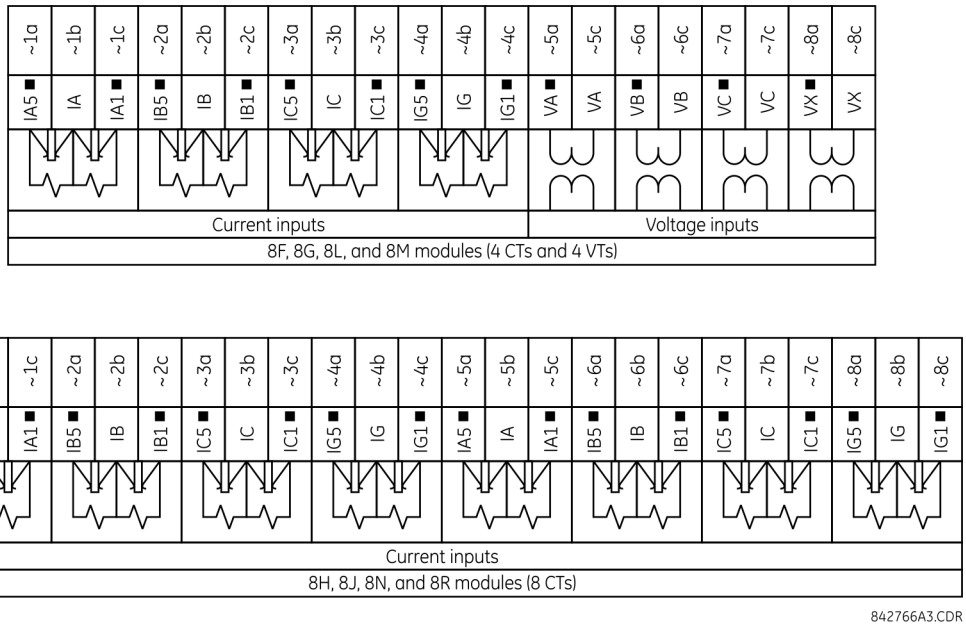

3.3.5 Process bus modules

The L90 can be ordered with a process bus interface module. The module interfaces with the HardFiber Process Bus System, or HardFiber Brick, allowing bidirectional IEC 61850 fiber-optic communications with up to eight HardFiber Bricks. The HardFiber system integrates seamlessly with the existing UR-series applications, including protection functions, FlexLogic, metering, and communications.

This process bus system offers the following benefits:

- Reduces labor associated with design, installation, and testing of protection and control applications using the UR by reducing the number of individual copper terminations
- Integrates seamlessly with existing UR applications, since the IEC 61850 process bus interface module replaces the traditional CT/VT modules
- Communicates using open standard IEC 61850 messaging

For details on the HardFiber system, see its Instruction Manual.

3.3.6 Contact inputs and outputs

Nearly all contact input/output modules have 24 terminal connections. The connections are arranged typically as three terminals per row, with eight rows in total. A given row of three terminals can be used for the outputs of one relay. For example, for form-C relay outputs, the terminals connect to the normally open (NO), normally closed (NC), and common contacts of the relay. For a form-A output, there are options of using current or voltage detection for feature supervision, depending on the module ordered. The terminal configuration for contact inputs is different for the two applications.

The contact inputs are grouped with a common return. The input/output modules have three versions of grouping: four inputs per common return, five inputs per common return on a high-density module, and two inputs per common return. When a contact input/output module is ordered, four inputs per common is used. If the inputs must be isolated per row, then two inputs per common return are selected (4D module). If the space limitation in the relay requires use of a high-density input module (6W), five inputs share one common return and the module has six banks of inputs.

The tables and diagrams that follow illustrate the module types (6A and so on) and contact arrangements that can be ordered for the relay. Since an entire row is used for a single contact output, the name is assigned using the module slot position and row number. However, since there are two contact inputs per row, these names are assigned by module slot position, row number, and column position.

Some form-A / solid-state relay outputs include circuits to monitor the DC voltage across the output contact when it is open, and the DC current through the output contact when it is closed. Each of the monitors contains a level detector whose output is set to logic "On = 1" when the current in the circuit is above the threshold setting. The voltage monitor is set to "On = 1" when there is a voltage across open contact (the detector allows a current of about 1 to 2.5 mA), and the current monitor is set to "On = 1" when the current flowing through the closed contact exceeds about 80 to 100 mA. The voltage monitor is intended to check the health of the overall trip circuit, and the current monitor can be used to seal-in the output contact until an external contact has interrupted current flow. If enabled, the current monitoring can be used as a seal-in signal to ensure that the form-A contact does not attempt to break the energized inductive coil circuit and weld the output contacts.

Block diagrams are shown as follows for form-A and solid-state relay outputs with optional voltage monitor, optional current monitor, and with no monitoring. The actual values shown for contact output 1 are the same for all contact outputs. Form-A contact output with or without a current or voltage monitoring option is not polarity sensitive. The polarity shown in the figure is required for solid-state contact output connection.

Figure 3-18: Form-A and solid-state contact outputs with voltage and current monitoring

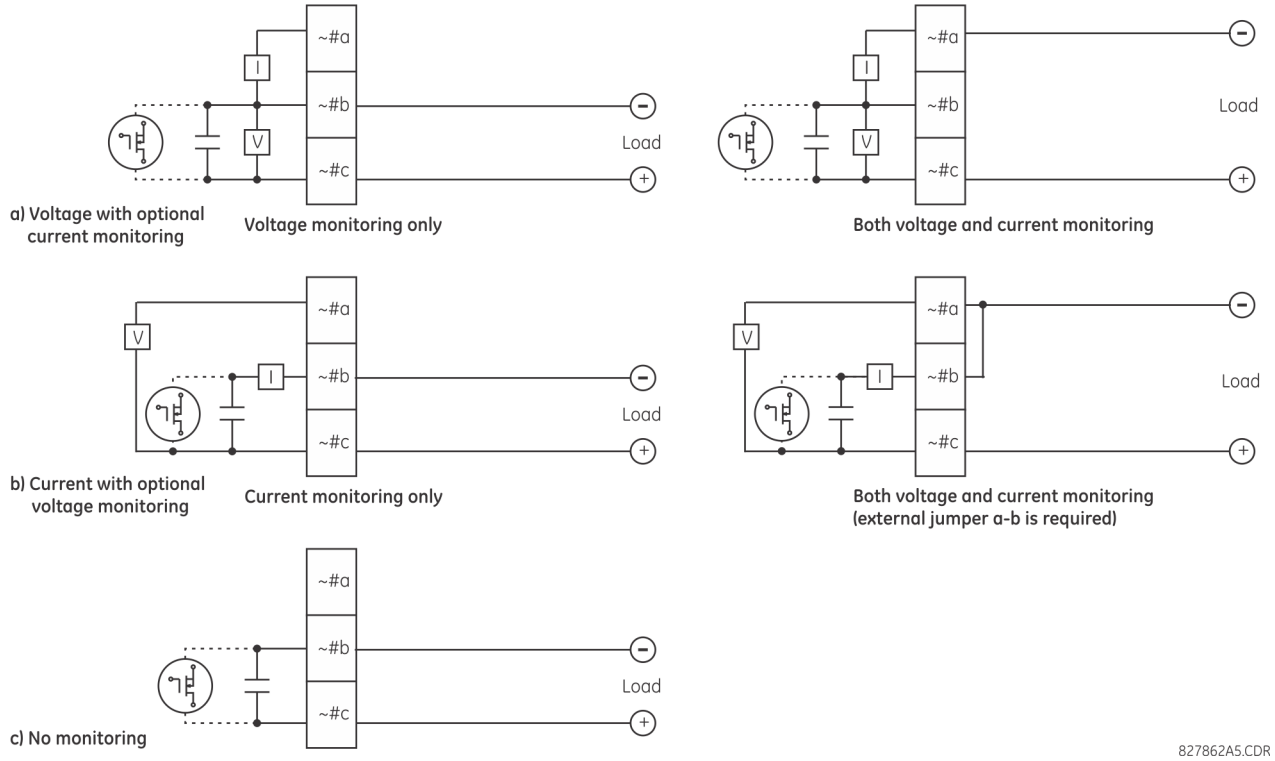

The operation of voltage and current monitors is reflected with the corresponding FlexLogic operands (CONT OP # VON, CONT OP # VOFF, and CONT OP # ION) that can be used in protection, control, and alarm logic. The typical application of the voltage monitor is breaker trip circuit integrity monitoring; a typical application of the current monitor is seal-in of the control command.

See the Digital Elements section of chapter 5 for an example of how form-A and solid-state relay contacts can be applied for breaker trip circuit integrity monitoring.

WARNING **Consider relay contacts unsafe to touch when the unit is energized. Death or serious injury can result from touching live relay contacts.**

NOTE

USE OF FORM-A AND SOLID-STATE RELAY OUTPUTS IN HIGH-IMPEDANCE CIRCUITS

For form-A and solid-state relay output contacts internally equipped with a voltage measuring circuit across the contact, the circuit has an impedance that can cause a problem when used in conjunction with external high-input impedance monitoring equipment, such as modern relay test set trigger circuits. These monitoring circuits can continue to read the form-A contact as being closed after it has closed and subsequently opened, when measured as an impedance.

The solution is to use the voltage measuring trigger input of the relay test set, and connect the form-A contact through a voltage-dropping resistor to a DC voltage source. If the 48 V DC output of the power supply is used as a source, a 500 Ω, 10 W resistor is appropriate. In this configuration, the voltage across either the form-A contact or the resistor can be used to monitor the state of the output.

NOTE

Where a tilde "~" symbol appears, substitute the slot position of the module. Where a number sign "#" appears, substitute the contact number.

NOTICE

When current monitoring is used to seal-in the form-A and solid-state relay contact outputs, give the FlexLogic operand driving the contact output a reset delay of 10 ms to prevent damage of the output contact (in situations when the element initiating the contact output is bouncing, at values in the region of the pickup value).

For high-density input/output modules 6W and 6X, use the following guidelines to connect. The new I/O modules use pin type terminal blocks instead of the current ring type. The new terminals are required to achieve higher I/O count per module.

- 12 to 24 AWG (3.3 mm^2 to 0.2 mm^2), single wire termination
- 16 to 24 AWG (1.31 mm^2 to 0.2 mm^2), multiple wire termination with matching wire sizes and stranding. Two wires maximum per circuit.
- Suggested wiring screw tightening torque is a minimum 4.43 in-lb (0.5 Nm) and maximum 5.31 in-lb (0.6 Nm)
- Minimum suggested temperature rating for the conductors is 75°C
- Wire type: copper

Table 3-3: Contact input and output module assignments

~6A module	
Terminal assignment	**Output or input**
~1	Form-A
~2	Form-A
~3	Form-C
~4	Form-C
~5a, ~5c	2 Inputs
~6a, ~6c	2 Inputs
~7a, ~7c	2 Inputs
~8a, ~8c	2 Inputs

~6B module	
Terminal assignment	**Output or input**
~1	Form-A
~2	Form-A
~3	Form-C
~4	Form-C
~5	Form-C
~6	Form-C
~7a, ~7c	2 Inputs
~8a, ~8c	2 Inputs

~6C module	
Terminal assignment	**Output**
~1	Form-C
~2	Form-C
~3	Form-C
~4	Form-C
~5	Form-C
~6	Form-C
~7	Form-C
~8	Form-C

~6D module	
Terminal assignment	**Output**
~1a, ~1c	2 Inputs
~2a, ~2c	2 Inputs
~3a, ~3c	2 Inputs
~4a, ~4c	2 Inputs
~5a, ~5c	2 Inputs
~6a, ~6c	2 Inputs
~7a, ~7c	2 Inputs
~8a, ~8c	2 Inputs

~6E module	
Terminal assignment	**Output or input**
~1	Form-C
~2	Form-C
~3	Form-C
~4	Form-C

~6F module	
Terminal assignment	**Output**
~1	Fast Form-C
~2	Fast Form-C
~3	Fast Form-C
~4	Fast Form-C

~6G module	
Terminal assignment	**Output or input**
~1	Form-A
~2	Form-A
~3	Form-A
~4	Form-A

~6H module	
Terminal assignment	**Output or input**
~1	Form-A
~2	Form-A
~3	Form-A
~4	Form-A

~6E module	
Terminal assignment	**Output or input**
~5a, ~5c	2 Inputs
~6a, ~6c	2 Inputs
~7a, ~7c	2 Inputs
~8a, ~8c	2 Inputs

~6F module	
Terminal assignment	**Output**
~5	Fast Form-C
~6	Fast Form-C
~7	Fast Form-C
~8	Fast Form-C

~6G module	
Terminal assignment	**Output or input**
~5a, ~5c	2 Inputs
~6a, ~6c	2 Inputs
~7a, ~7c	2 Inputs
~8a, ~8c	2 Inputs

~6H module	
Terminal assignment	**Output or input**
~5	Form-A
~6	Form-A
~7a, ~7c	2 Inputs
~8a, ~8c	2 Inputs

~6K module	
Terminal assignment	**Output**
~1	Form-C
~2	Form-C
~3	Form-C
~4	Form-C
~5	Fast Form-C
~6	Fast Form-C
~7	Fast Form-C
~8	Fast Form-C

~6L module	
Terminal assignment	**Output or input**
~1	Form-A
~2	Form-A
~3	Form-C
~4	Form-C
~5a, ~5c	2 Inputs
~6a, ~6c	2 Inputs
~7a, ~7c	2 Inputs
~8a, ~8c	2 Inputs

~6M module	
Terminal assignment	**Output or input**
~1	Form-A
~2	Form-A
~3	Form-C
~4	Form-C
~5	Form-C
~6	Form-C
~7a, ~7c	2 Inputs
~8a, ~8c	2 Inputs

~6N module	
Terminal assignment	**Output or input**
~1	Form-A
~2	Form-A
~3	Form-A
~4	Form-A
~5a, ~5c	2 Inputs
~6a, ~6c	2 Inputs
~7a, ~7c	2 Inputs
~8a, ~8c	2 Inputs

~6P module	
Terminal assignment	**Output or input**
~1	Form-A
~2	Form-A
~3	Form-A
~4	Form-A
~5	Form-A
~6	Form-A
~7a, ~7c	2 Inputs
~8a, ~8c	2 Inputs

~6R module	
Terminal assignment	**Output or input**
~1	Form-A
~2	Form-A
~3	Form-C
~4	Form-C
~5a, ~5c	2 Inputs
~6a, ~6c	2 Inputs
~7a, ~7c	2 Inputs
~8a, ~8c	2 Inputs

~6S module	
Terminal assignment	**Output or input**
~1	Form-A
~2	Form-A
~3	Form-C
~4	Form-C
~5	Form-C
~6	Form-C
~7a, ~7c	2 Inputs
~8a, ~8c	2 Inputs

~6T module	
Terminal assignment	**Output or input**
~1	Form-A
~2	Form-A
~3	Form-A
~4	Form-A
~5a, ~5c	2 Inputs
~6a, ~6c	2 Inputs
~7a, ~7c	2 Inputs
~8a, ~8c	2 Inputs

~6U module	
Terminal assignment	**Output or input**
~1	Form-A
~2	Form-A
~3	Form-A
~4	Form-A
~5	Form-A
~6	Form-A
~7a, ~7c	2 Inputs
~8a, ~8c	2 Inputs

~6V module	
Terminal assignment	**Output or input**
~1	Form-A
~2	Form-A
~3	Form-C
~4	2 Outputs
~5a, ~5c	2 Inputs
~6a, ~6c	2 Inputs
~7a, ~7c	2 Inputs
~8a, ~8c	2 Inputs

~6W module	
Terminal assignment	**Output or input**
~1a	Input
~2a	Input
~3a	Input
~4a	Input
~5a	Input
~7a	Input
~8a	Input
~9a	Input
~10a	Input
~11a	Input
~13a	Input

6X module	
Terminal assignment	**Output or input**
~1a, ~2a	Form-A
~3a, ~4a	Form-A
~5a, ~6a	Form-A
~7a, ~8a	Form-A
~9a, ~10a	Form-A
~11a, ~12a	Form-A
~13a, ~14a	Form-A
~15a, ~16a	Form-A
~17a, ~18a	Form-A
~1b, ~2b	Form-A
~3b, ~4b	Form-A

3

~6U module	
Terminal assignment	Output or input

~6V module	
Terminal assignment	Output or input

~6W module	
Terminal assignment	Output or input
~14a	Input
~15a	Input
~16a	Input
~17a	Input
~1b	Input
~2b	Input
~3b	Input
~4b	Input
~5b	Input
~7b	Input
~8b	Input
~9b	Input
~10b	Input
~11b	Input
~13b	Input
~14b	Input
~15b	Input
~16b	Input
~17b	Input

6X module	
Terminal assignment	Output or input
~5b, ~6b	Form-A
~7b, ~8b	Form-A
~9b, ~10b	Form-A
~11b, ~12b	Form-A
~13b, ~14b	Form-A
~15b, ~16b	Form-A
~17b, ~18b	Form-A

~67 module	
Terminal assignment	Output
~1	Form-A
~2	Form-A
~3	Form-A
~4	Form-A
~5	Form-A
~6	Form-A
~7	Form-A
~8	Form-A

~4A module	
Terminal assignment	Output
~1	Not Used
~2	Solid-State
~3	Not Used
~4	Solid-State
~5	Not Used
~6	Solid-State
~7	Not Used
~8	Solid-State

~4B module	
Terminal assignment	Output
~1	Not Used
~2	Solid-State
~3	Not Used
~4	Solid-State
~5	Not Used
~6	Solid-State
~7	Not Used
~8	Solid-State

~4C module	
Terminal assignment	Output
~1	Not Used
~2	Solid-State
~3	Not Used
~4	Solid-State
~5	Not Used
~6	Solid-State
~7	Not Used
~8	Solid-State

~4D module	
Terminal assignment	Output
~1a, ~1c	2 Inputs
~2a, ~2c	2 Inputs
~3a, ~3c	2 Inputs
~4a, ~4c	2 Inputs
~5a, ~5c	2 Inputs
~6a, ~6c	2 Inputs
~7a, ~7c	2 Inputs
~8a, ~8c	2 Inputs

~4L module	
Terminal assignment	Output
~1	2 Outputs
~2	2 Outputs
~3	2 Outputs
~4	2 Outputs
~5	2 Outputs
~6	2 Outputs
~7	2 Outputs
~8	Not Used

Figure 3-19: Contact input and output module wiring (Sheet 1 of 3)

Figure 3-20: Contact input and output module wiring (Sheet 2 of 3)

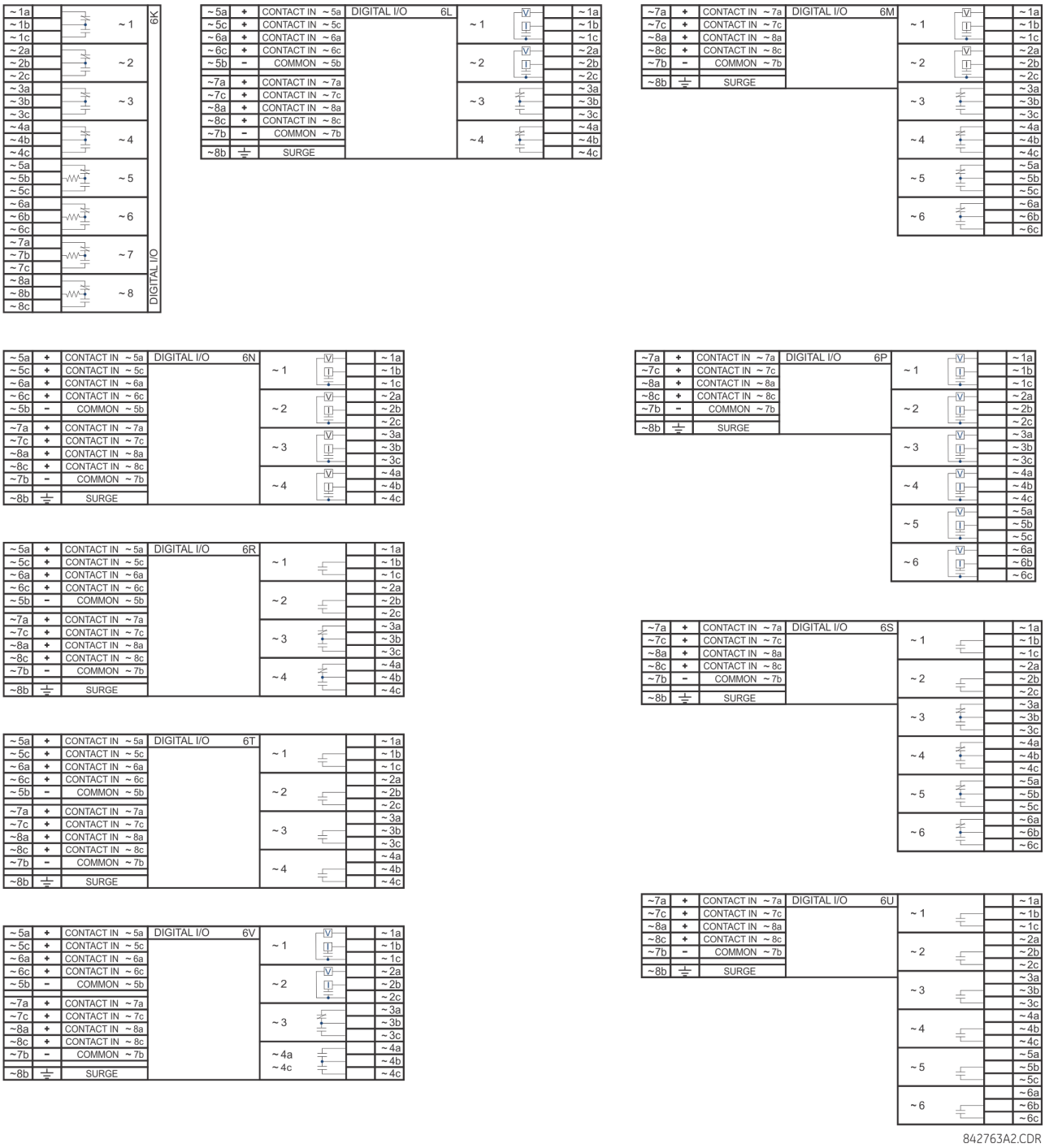

Figure 3-21: Contact input and output module wiring (Sheet 3 of 3)

DIGITAL I/O					6W
~1b	+	CONTACT IN ~1b	CONTACT IN ~1a	+	~1a
~2b	+	CONTACT IN ~2b	CONTACT IN ~2a	+	~2a
~3b	+	CONTACT IN ~3b	CONTACT IN ~3a	+	~3a
~4b	+	CONTACT IN ~4b	CONTACT IN ~4a	+	~4a
~5b	+	CONTACT IN ~5b	CONTACT IN ~5a	+	~5a
~6b	-	COMMON ~ 6b	COMMON ~ 6a	-	~6a
~7b	+	CONTACT IN ~7b	CONTACT IN ~7a	+	~7a
~8b	+	CONTACT IN ~8b	CONTACT IN ~8a	+	~8a
~9b	+	CONTACT IN ~9b	CONTACT IN ~9a	+	~9a
~10b	+	CONTACT IN ~10b	CONTACT IN ~10	+	~10a
~11b	+	CONTACT IN ~11b	CONTACT IN ~11a	+	~11a
~12b	-	COMMON ~ 12b	COMMON ~ 12a	-	~12a
~13b	+	CONTACT IN ~13b	CONTACT IN ~13a	+	~13a
~14b	+	CONTACT IN ~14b	CONTACT IN ~14a	+	~14a
~15b	+	CONTACT IN ~15b	CONTACT IN ~15a	+	~15a
~16b	+	CONTACT IN ~16b	CONTACT IN ~16a	+	~16a
~17b	+	CONTACT IN ~17b	CONTACT IN ~17a	+	~17a
~18b	-	COMMON ~ 18b	COMMON ~ 18a	-	~18a

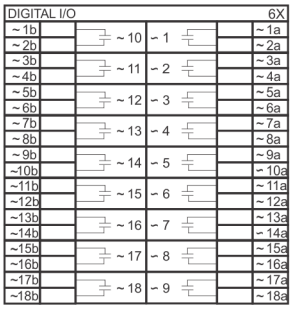

859759A2.CDR

NOTICE For proper functionality, observe the polarity shown in the figures for all contact input and output connections.

3.3.6.1 Contact inputs

A dry contact has one side connected to terminal B3b. This is the positive 48 V DC voltage rail supplied by the power supply module. The other side of the dry contact is connected to the required contact input terminal. Each contact input group has its own common (negative) terminal that must be connected to the DC negative terminal (B3a) of the power supply module. When a dry contact closes, a current of 1 to 3 mA flows through the associated circuit.

A wet contact has one side connected to the positive terminal of an external DC power supply. The other side of this contact is connected to the required contact input terminal. If a wet contact is used, then the negative side of the external source must be connected to the relay common (negative) terminal of each contact group. The maximum external source voltage for this arrangement is 300 V DC.

The voltage threshold at which each group of four contact inputs detects a closed contact input is programmable as 17 V DC for 24 V sources, 33 V DC for 48 V sources, 84 V DC for 110 to 125 V sources, and 166 V DC for 250 V sources.

Figure 3-22: Dry and wet contact input connections

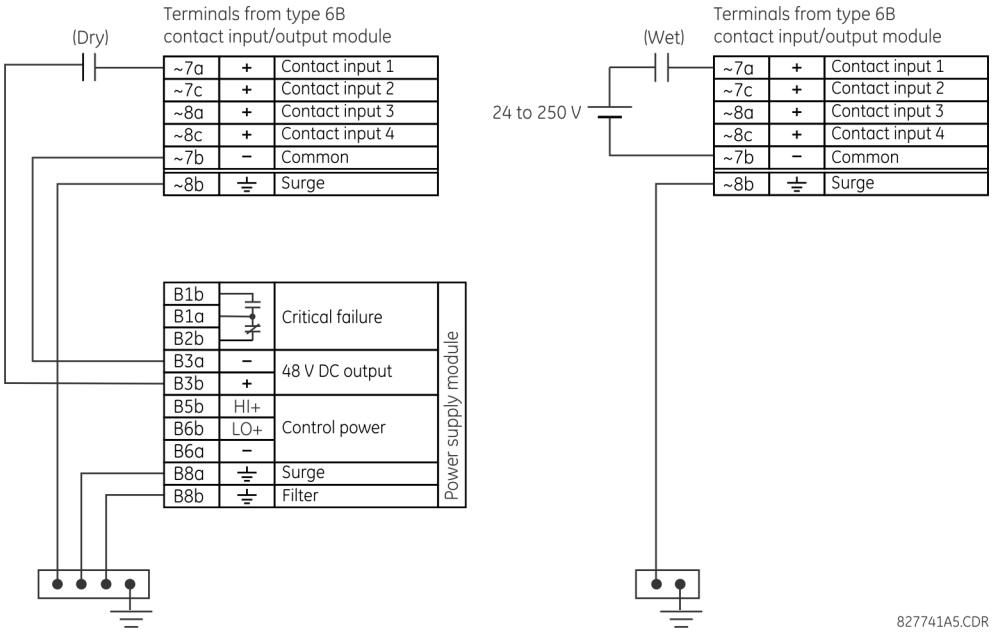

827741A5.CDR

NOTE Where a tilde "~" symbol appears, substitute the slot position of the module.

There is no provision in the relay to detect a DC ground fault on 48 V DC control power external output. We recommend using an external DC supply.

3.3.6.2 General application considerations

Contacts outputs of protective relays, auxiliary contacts from breakers, disconnectors and other devices are connected generally to contacts inputs of protective relays. In some situations, the contact outputs of some protective relays can have high impedance connected across it. When such a contact output is connected across a L90 contact input, it can spuriously operate the L90 input even when the output is open, if there is a substantial distributed capacitance (represented by C1) present in the wiring between the output and the L90 input, and the debounce time setting in the L90 relay is low enough. This false assertion of the contact input, when there is inadvertent ground present at the DC positive terminal, can be prevented by inserting a resistor across the L90 input.

The following figure shows a typical DC circuit, with battery ground detection, of contact input. The contact output has parallel impedance across it (represented by R1).

Figure 3-23: Typical contact input DC circuit

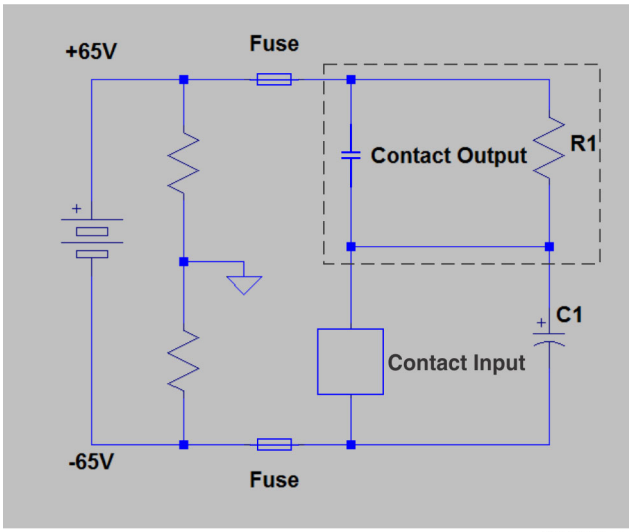

The presence of the impedance path (R1) across the contact output allows the stray (distributed) capacitance C1 to charge as shown, thus developing a voltage across the contact input enough to momentarily operate the input while the capacitance discharges in the presence of DC ground on the positive terminal of the battery.

The duration of the discharge depends on the value of the distributed capacitance, the initial voltage of the distributed capacitance, and the input impedance of the contact input. If the duration is greater than the debounce time setting, then the contact input operates.

The application example that follows describes how to mitigate this issue by connecting a resistor across the contact input, as shown in the next figure, or by adjusting the debounce time setting to a value greater than the discharge time to prevent spurious operation of the contact input only if the voltage (with output open) across the contact input due to trickle current is less than the threshold voltage. This operation of contact inputs also can be prevented by using the Auto-Burnish contact inputs or contact inputs with active impedance.

Figure 3-24: Contact input connected to a contact output with resistor (R2) across the input

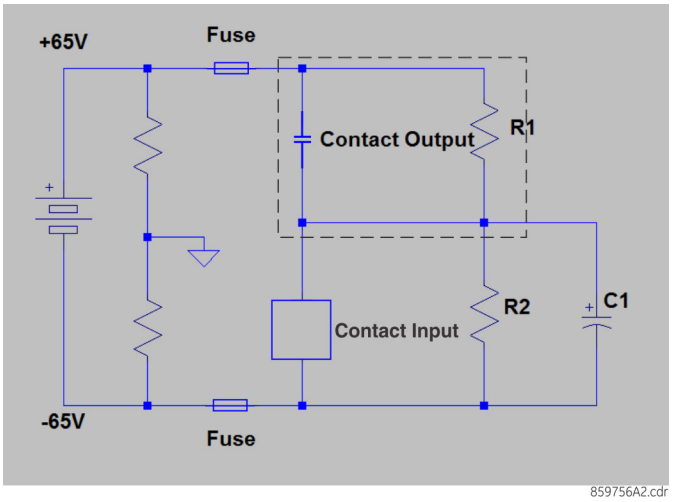

Application example

This example is for illustrative purposes only and the calculations present the worst-case scenario. In practice, the value of debounce time can be lower.

Contact input ON state impedance used in the calculation of the discharge period is based on the following table.

Table 3-4: Discharge period

Battery voltage (V)	Input impedance (kΩ)
130	50
250	97

Debounce time setting = 2 ms

Assume a stray capacitance of 0.1 µF.

Assume an initial voltage across the stray capacitance "Vinitial" = 19 V (Vthreshold - 65 V), where Vthreshold = 84 V. The initial voltage Vinitial depends on values of impedance of R1 and contact inputs when the contact input is OFF (non-activated state).

Therefore, discharge time constant (τ) =50 kΩ *0.1 µF = 5 ms.

Discharge period t is calculated from the following equation:

$$V_{threshold} = (V_{batt} - V_{Initial}) * e^{(-t/\tau)}$$

$$84 = -149 * e^{(t/0.005)} \qquad \textbf{Eq. 3-1}$$

$$T = -0.005 * \ln(84/149) = 0.0029 \text{ s}$$

Therefore, in this example the contact inputs operate.

To prevent this operation, the debounce time must be increased to 4 ms (set debounce time as per the following table) or insert a resistor less than or equal to "R" as calculated later.

Table 3-5: Typical debounce time setting

Stray capacitance (µF)	Battery voltage (V)	Debounce time (ms)
0.05	130	2
0.1	130	4
0.2	130	6
0.05	250	3
0.1	250	6 *
0.2	250	11

* Default debounce time on contact inputs is 6 ms.

The value of this resistor "R" is calculated as follows:

1. Determine the minimum voltage (V threshold) required to turn on the input. This is determined by direct measurement or referenced in the input specifications.
2. Calculate the resistance necessary to limit the voltage to 1/3 V threshold (when the contact is OFF, the non-activated state) as follows:

   R = (Vthreshold / 3) / (2 mA) **Eq. 3-2**

   The 2 mA current is used in case the contact input is connected across the GE Form A contact output with voltage monitoring. Otherwise use the amperage of the active circuit connected to the contact input when its contact output is open and the voltage across the contact input is third trigger threshold to calculate the resistor value.
3. When the contact is ON (operate state), the battery voltage appears across the resistor. The wattage rating of the resistor is then:

   PR = 1.3 * (Vbatt) ^2 / R Watts **Eq. 3-3**
4. Applying the following equation to our example:

   R = 84 V / 3 * (1 / 2 mA) = 14 kΩ

   PR = 1.57 Watts **Eq. 3-4**
5. Calculating the voltage across the contact input with the Burden Resistor, Voltage across the contact Input:

   Vresistor = 2 mA * 14 Kohm = 28 V

   Vresistor < contact input threshold (84 V) **Eq. 3-5**

In conclusion, in this example, the contact input does NOT operate falsely with the Burden Resistor across its input AND when a battery ground is present.

3.3.6.3 Use of contact inputs with auto-burnishing

The contact inputs sense a change of state of the external device contact based on the measured current. When external devices are located in a harsh industrial environment (either outdoor or indoor), their contacts can be exposed to various types of contamination. Normally, there is a thin film of insulating sulfidation, oxidation, or contaminates on the surface of the contacts, sometimes making it difficult or impossible to detect a change of state. This film must be removed to establish circuit continuity — an impulse of higher than normal current can accomplish this.

The contact inputs with auto-burnish create a high current impulse when the threshold is reached to burn off this oxidation layer as a maintenance to the contacts. Afterwards the contact input current is reduced to a steady-state current. The impulse has a five-second delay after a contact input changes state.

Figure 3-25: Current through contact inputs with auto-burnishing

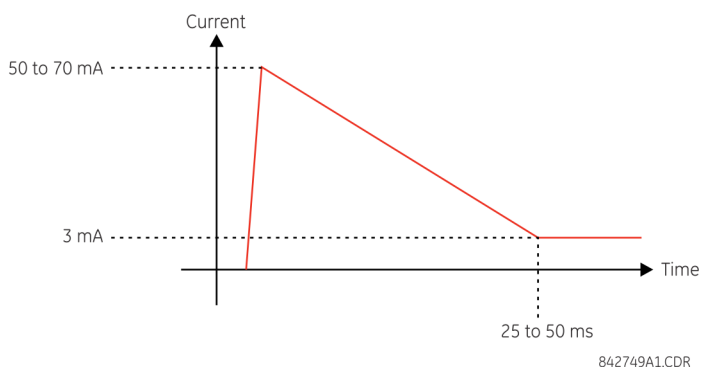

Regular contact inputs limit current to less than 3 mA to reduce station battery burden. In contrast, contact inputs with auto-burnishing allow currents up to 50 to 70 mA at the first instance when the change of state is sensed. Then, within 25 to 50 ms, this current is slowly reduced to 3 mA as indicated. The 50 to 70 mA peak current burns any film on the contacts, allowing for proper sensing of state changes. If the external device contact is bouncing, the auto-burnishing starts when external device contact bouncing is over.

Another important difference between the auto-burnishing input module and the regular input modules is that only two contact inputs have common ground, as opposed to four contact inputs sharing one common ground (see the Contact Input and Output Module Wiring diagrams). This is beneficial when connecting contact inputs to separate voltage sources. Consequently, the threshold voltage setting is also defined per group of two contact inputs.

The auto-burnish feature can be disabled or enabled using the DIP switches found on each daughter card. There is a DIP switch for each contact, for a total of 16 inputs.

Figure 3-26: Auto-burnish DIP switches

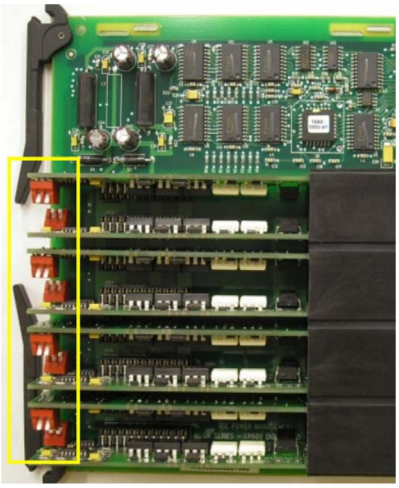

Contact input 1 auto-burnish = Off
Contact input 2 auto-burnish = Off

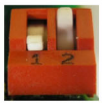

Contact input 1 auto-burnish = On
Contact input 2 auto-burnish = Off

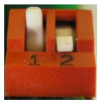

Contact input 1 auto-burnish = Off
Contact input 2 auto-burnish = On

Contact input 1 auto-burnish = On
Contact input 2 auto-burnish = On

842751A1.CDR

The auto-burnish circuitry has an internal fuse for safety purposes. During regular maintenance, check the auto-burnish functionality using an oscilloscope.

3.3.6.4 Use of contact inputs with active impedance

Contact inputs can be susceptible to parasitic capacitance, caused by long cable runs affected by switching surges from external circuits. This can result in inadvertent activation of contact inputs with the external contact open. In this case, GE recommends using the contact I/O module with active impedance circuit.

Active impedance contact input can tolerate external cable capacitance of up to 0.2 µF, without entering the ON state for more than 2 ms. The contact input debounce time can still be set above 2 ms for added security to prevent contact input activations caused by external transient ON states.

An active impedance contact input is normally in Low impedance mode during OFF contact state (non-activated condition). During Low impedance state, contact input impedance is maintained at 10 K Ohms impedance to allow fast discharge of the stray capacitance of the long cables.

When the contact input voltage exceeds the set threshold, active impedance maintains 10 K Ohms impedance. If voltage starts rapidly decreasing, this indicates that stray capacitance is being discharged through the contact input. If, however, voltage stabilizes above the set threshold, the input impedance is switched to High impedance mode of 100 K Ohms. This value reduces the input current to <3 mA, and contact input switches to the ON state (operated state).

The figure shows the active impedance contact input V-I characteristic. Different thresholds with their corresponding characteristics are shown by color. The contact input is in the ON (operated) state if the input voltage is to the right of the colored threshold band (+/-10% tolerance), and the contact input is in the OFF (non-activated) state when input voltage is to the left of the band. A contact input is in LOW state during non-operated system condition, and actively switches to HIGH state upon detection of input voltage above the settable threshold.

3

Figure 3-27: Active impedance contact input V-I characteristic

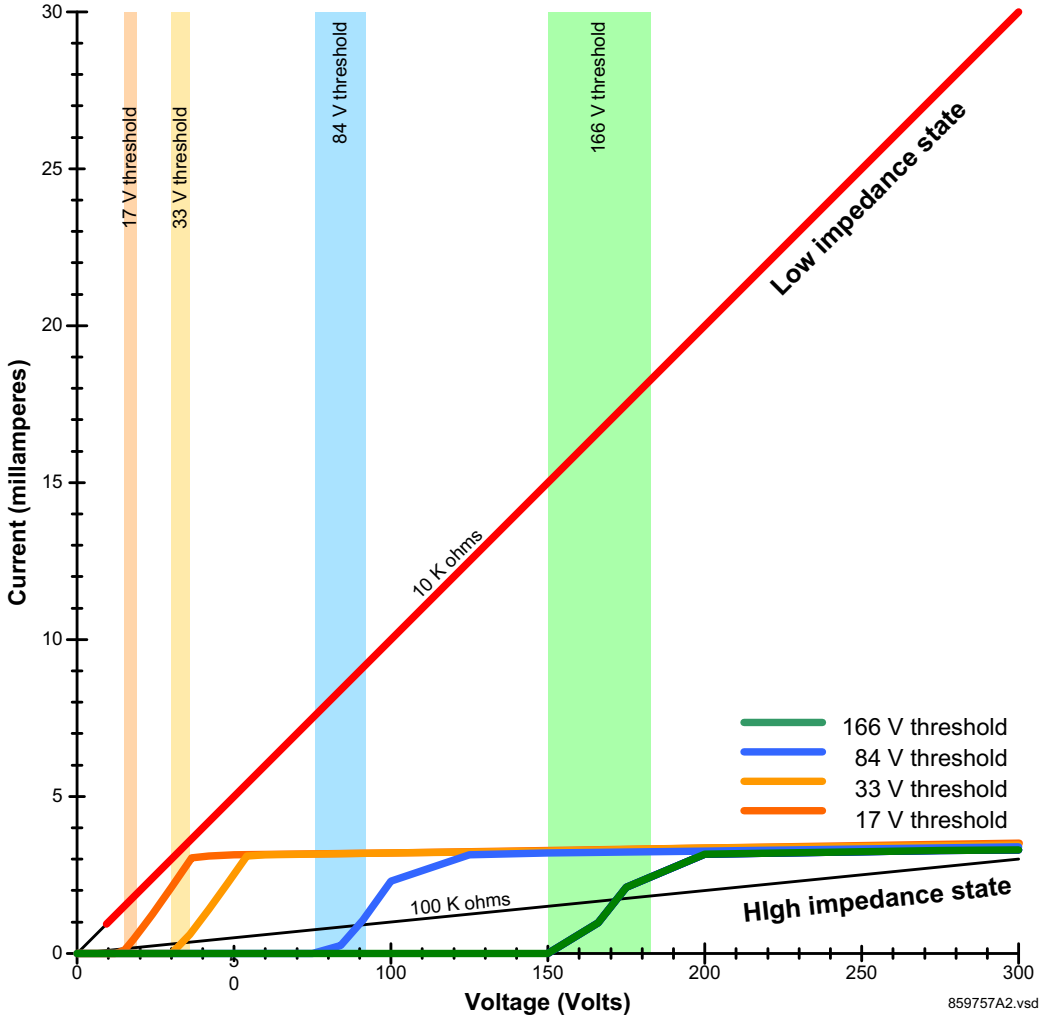

3.3.7 Transducer inputs and outputs

Transducer input modules receive input signals from external DCmA output transducers (DCmA In) or resistance temperature detectors (RTDs). Hardware and software are provided to receive signals from these external transducers and convert these signals into a digital format for use as required.

Transducer output modules provide DC current outputs in several standard DCmA ranges. Software is provided to configure virtually any analog quantity used in the relay to drive the analog outputs.

Each transducer input/output module has 24 terminal connections. These connections are arranged as three terminals per row over eight rows. A given row can be used for either inputs or outputs, with terminals in column "a" having positive polarity and terminals in column "c" having negative polarity. Since an entire row is used for a single input/output channel, the name of the channel is assigned using the module slot position and row number.

Each module also requires that a connection from an external ground bus be made to terminal 8b. The current outputs require a twisted-pair shielded cable, where the shield is grounded at one end only. The following figure illustrates the transducer module types (5A, 5C, 5D, 5E, and 5F) and channel arrangements that can be ordered for the relay.

NOTE

Where a tilde "~" symbol appears, substitute the slot position of the module.

Figure 3-28: Transducer input/output module wiring

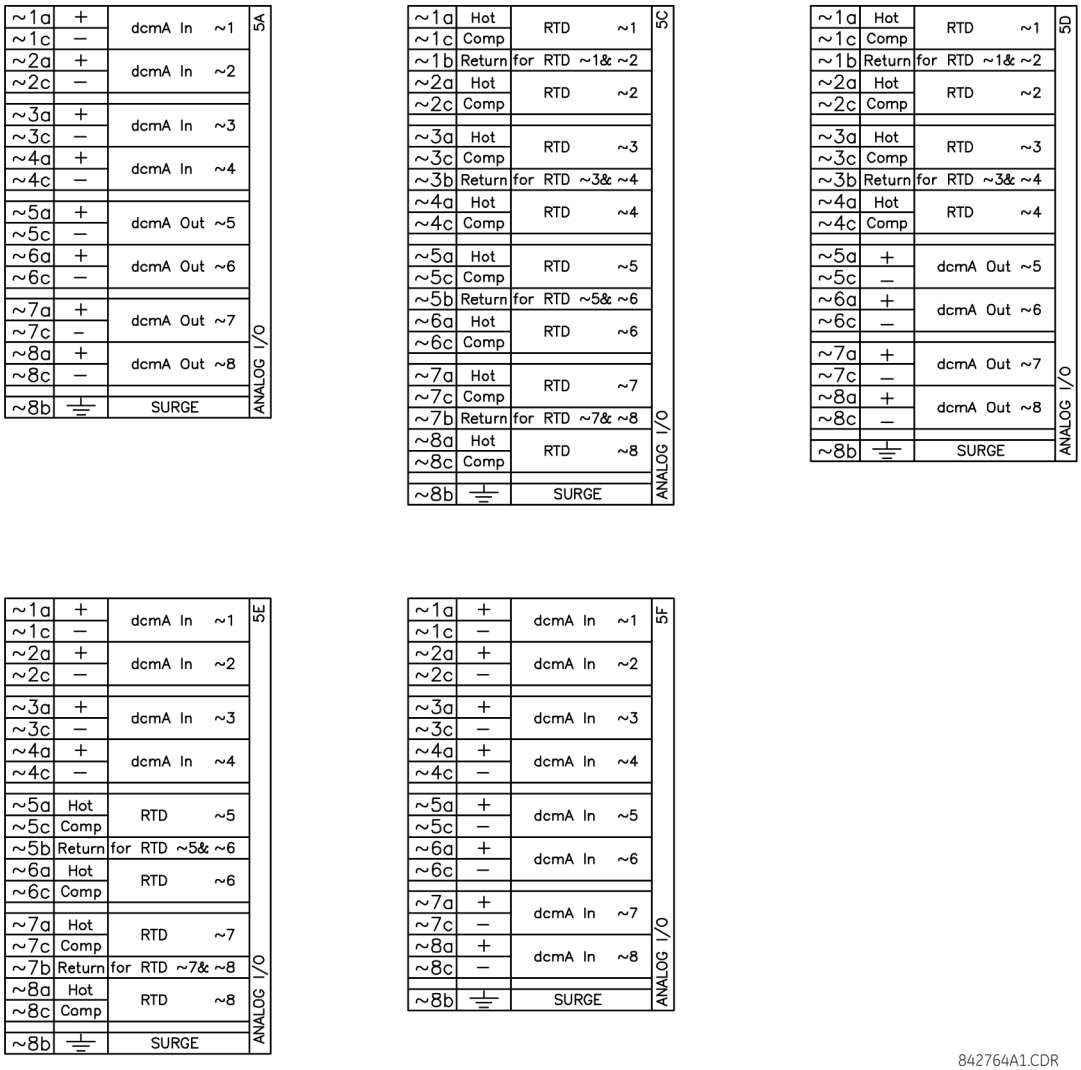

The following figure show how to connect RTDs.

3

Figure 3-29: RTD connections

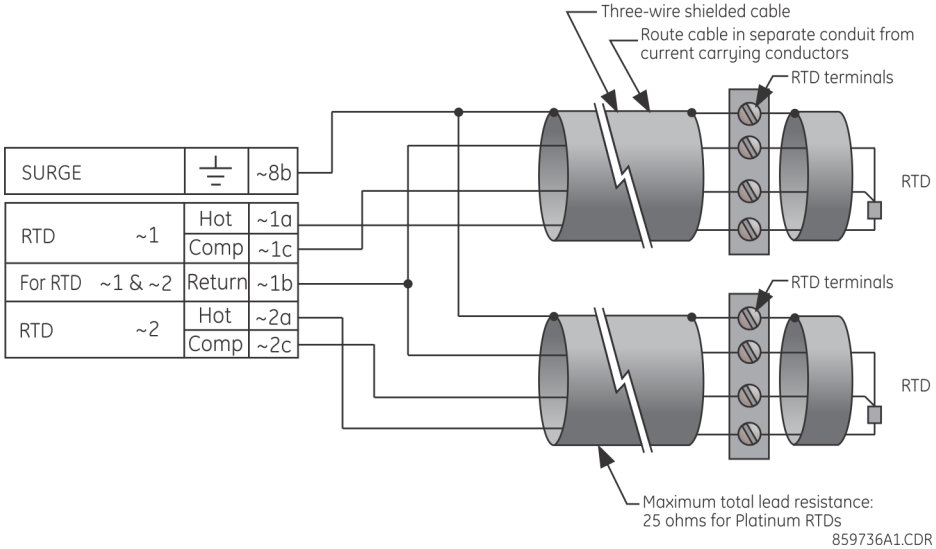

3.3.8 RS232 port

On the enhanced and basic front panels is a nine-pin RS232C serial port for programming with a computer. All that is required to use this interface is a computer running the EnerVista UR Setup software provided with the relay. Cabling for the RS232 port is shown in the following figure for the nine-pin connector on the UR and nine or 25-pin connector on a computer.

The baud rate for this port can be set, with a default of 115200 bps.

Figure 3-30: RS232 front panel port connection

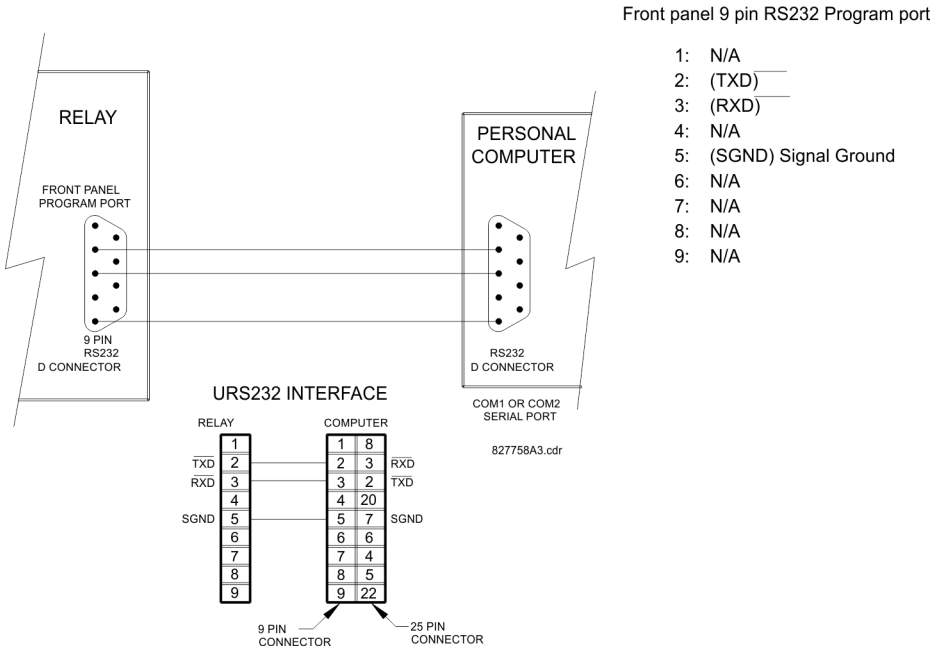

3.3.9 CPU communication ports

3.3.9.1 Overview

There is a rear RS485 communication port on the CPU module.

The CPU module does not require a surge ground connection.

If using a Process Bus Module and IRIG-B as the synchronizing source, GE recommends moving the grounding from the IRIG-B generator to UR terminal D4a in order to better protect the IRIG-B input from long bursts of transient noise.

3

Figure 3-31: CPU module wiring when using a Process Bus Module

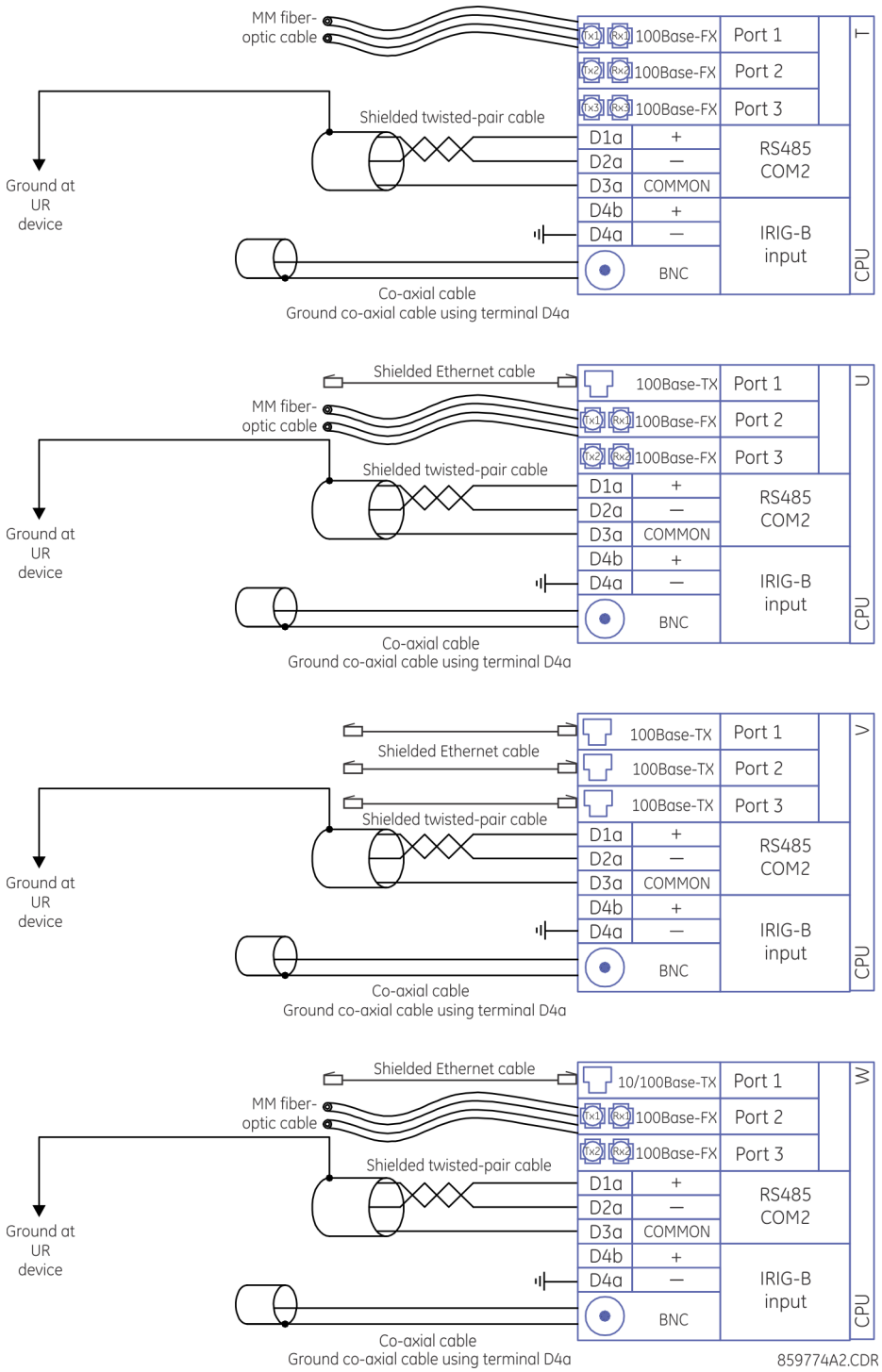

If not using a Process Bus Module, the following IRIG-B cable and ground connection is appropriate.

Figure 3-32: CPU module wiring for IRIG-B without Process Bus Module

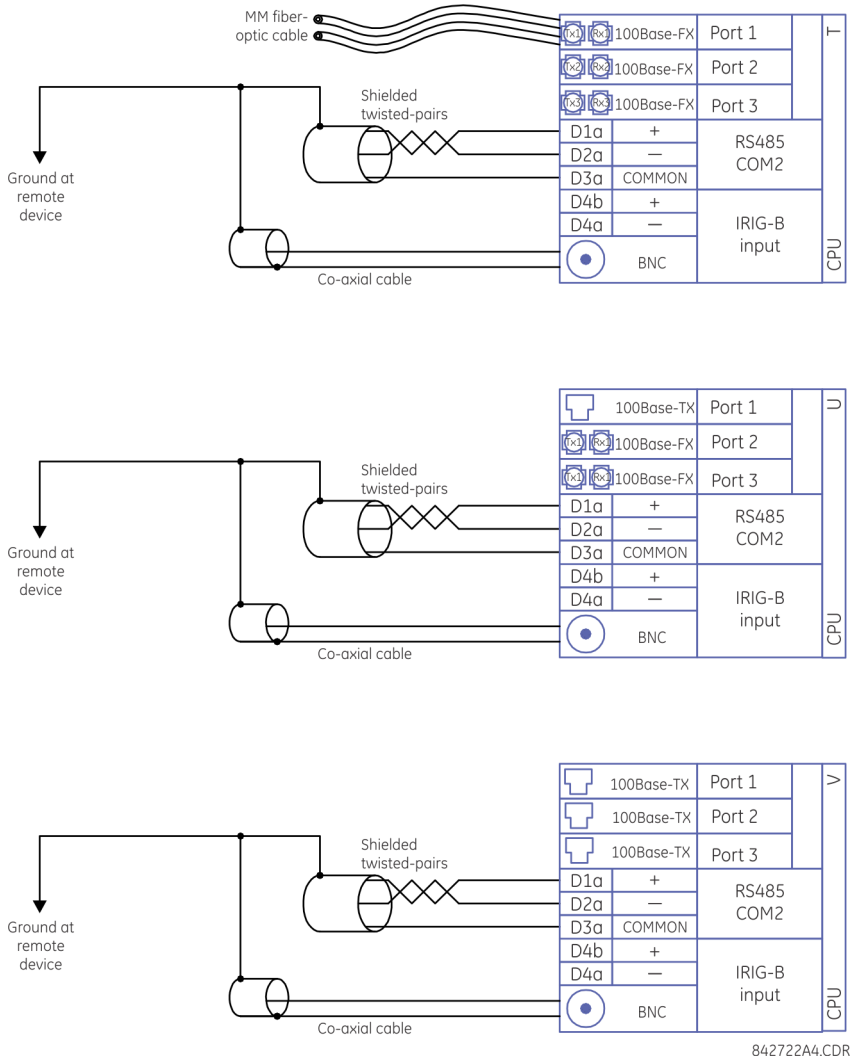

3.3.9.2 RS485 port

RS485 data transmission and reception are accomplished over a single twisted-pair wire with transmit and receive data alternating over the same two wires. Through the use of the port, continuous monitoring and control from a remote computer, SCADA system, or Power Line Carrier (PLC) is possible.

To minimize errors from noise, the use of shielded twisted-pair wire is recommended. Correct polarity must be observed. For instance, the relays must be connected with all RS485 "+" terminals connected together, and all RS485 "–" terminals connected together. Though data is transmitted over a two-wire twisted pair, all RS485 devices require a shared reference, or common voltage. This common voltage is implied to be a power supply common. Some systems allow the shield (drain wire) to be used as common wire and to connect directly to the L90 COM terminal (#3); others function correctly only if the common wire is connected to the L90 COM terminal, but insulated from the shield.

To avoid loop currents, ground the shield at only one point. If other system considerations require the shield to be grounded at more than one point, install resistors (typically 100 ohms) between the shield and ground at each grounding point. Each relay needs to be daisy-chained to the next one in the link. A maximum of 32 relays can be connected in this manner without exceeding driver capability. For larger systems, additional serial channels must be added. It is also possible to use commercially available repeaters to have more than 32 relays on a single channel. Avoid star or stub connections entirely.

3

Lightning strikes and ground surge currents can cause large momentary voltage differences between remote ends of the communication link. For this reason, surge protection devices are provided internally at both communication ports. An isolated power supply with an optocoupled data interface also acts to reduce noise coupling. To ensure maximum reliability, ensure that all equipment has similar transient protection devices installed.

Terminate both ends of the RS485 circuit with an impedance as shown in the figure.

Figure 3-33: RS485 serial connection

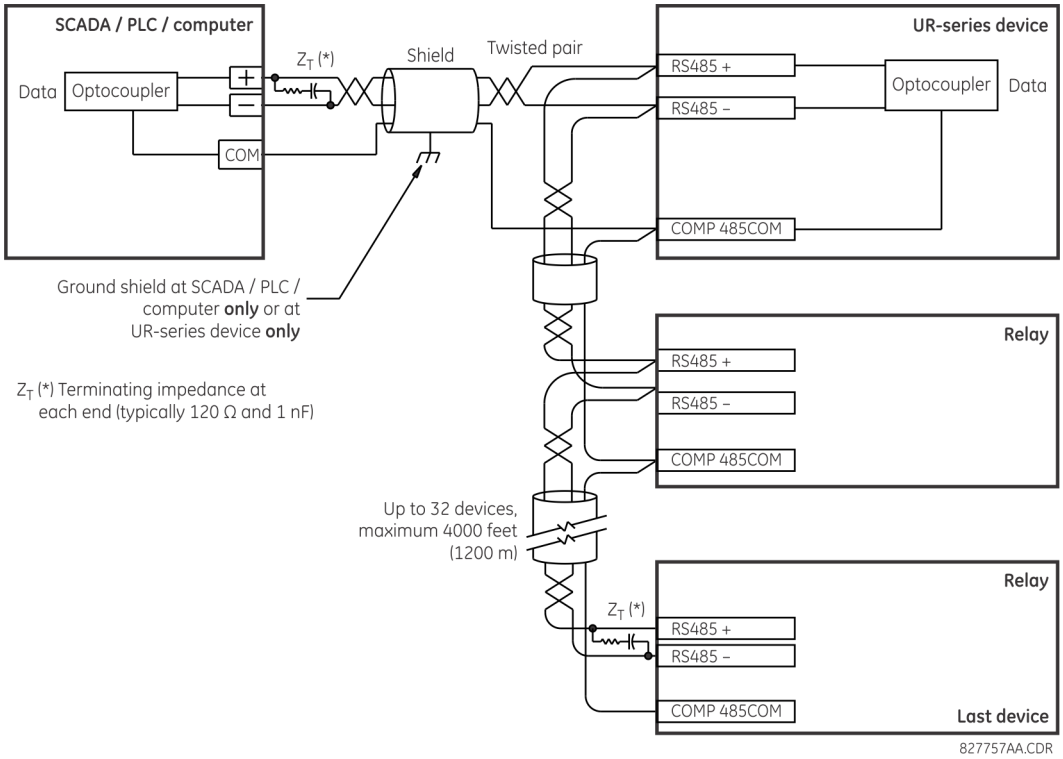

3.3.9.3 100Base-FX fiber optic ports

The fiber-optic communication ports allow for fast and efficient communications between relays at 100 Mbps. Optical fiber can be connected to the relay supporting a wavelength of 1310 nm in multimode.

Ensure that the dust covers are installed when the fiber is not in use. Dirty or scratched connectors can lead to high losses on a fiber link.

3.3.10 IRIG-B

There is a round IRIG-B connector at the back of the CPU module, marked "IN". Use is optional.

IRIG-B is a standard time code format that allows stamping of events to be synchronized among connected devices. The IRIG-B code allows time accuracies of up to 100 ns. The GE MultiSync 100 1588 GPS Clock as well as third-party equipment are available for generating the IRIG-B signal. This equipment can use a global positioning system (GPS) satellite system to obtain the time reference so that devices at different geographic locations can be synchronized. The IRIG time code formats are serial, pulse width-modulated codes that can be either DC level shifted or amplitude modulated (AM). Using IRIG-B input, the L90 operates an internal oscillator with 1 μs resolution and accuracy.

Figure 3-34: Options for IRIG-B connection

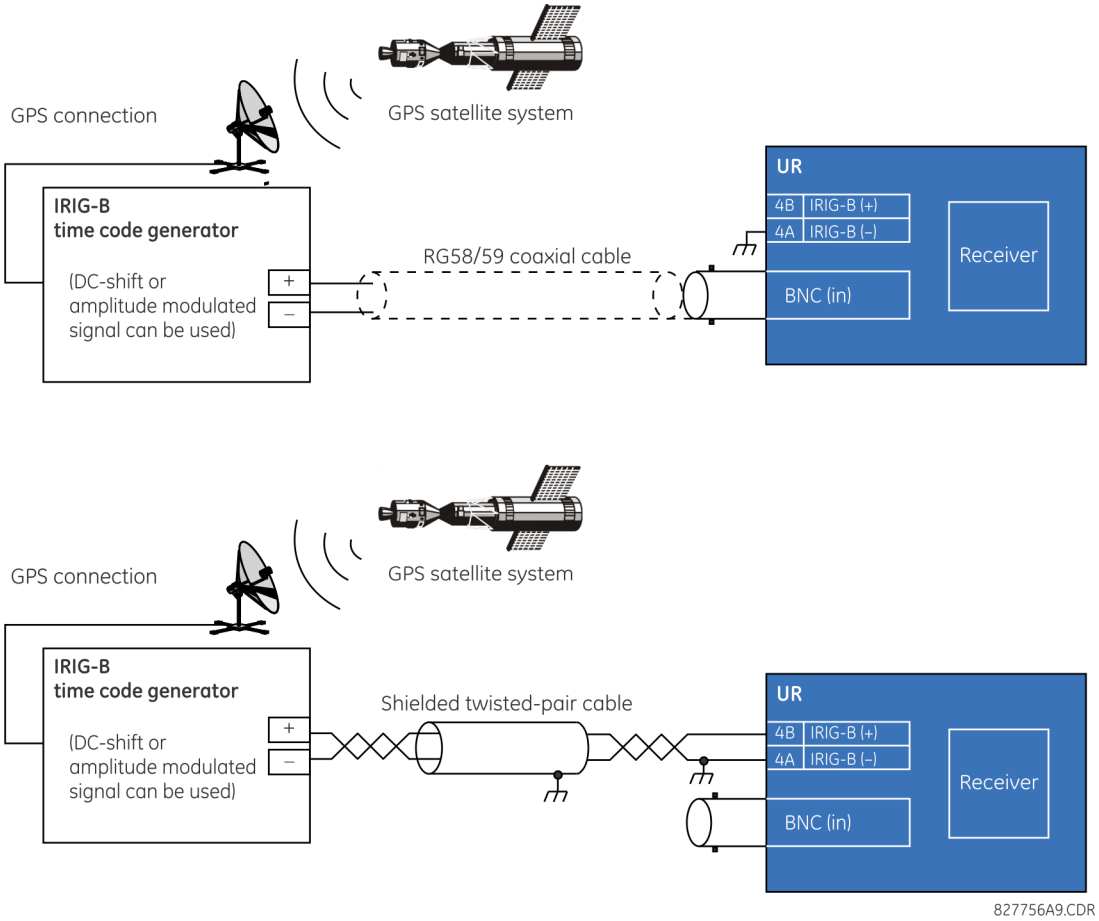

NOTE

Using an amplitude-modulated receiver causes errors up to 1 ms in event time stamping.

NOTE

When IRIG-B is used as the time synchronization source for synchrophasors, the DC level shifted option must be used in order to achieve the 1% Total Vector Error specified by the standard. If amplitude modulated IRIG-B is used, it results in a 20 to 25 degree error in the synchrophasor angle measurement. The IEEE 1588 Precision Time Protocol can also be used to achieve accurate time synchronization for synchrophasor calculation.

3.4 Pilot channel communications

A special inter-relay communications module is available for the L90. This module is plugged into slot "W" in horizontally mounted units and slot "R" in vertically mounted units. Inter-relay channel communications is not the same as 10/100Base-F interface communications (available as an option with the CPU module). Channel communication is used for sharing data among relays.

The inter-relay communications modules are available with several interfaces and some are outlined here in more detail. Those that apply depend on options purchased. The options are outlined in the Inter-Relay Communications section of the Order Code tables in Chapter 2.

All of the fiber modules use ST type connectors. For two-terminal applications, each L90 relay requires at least one communications channel.

NOTE

The current differential function must be "Enabled" for the communications module to properly operate. See the **SETTINGS ⇨⇩ GROUPED ELEMENTS ⇨ LINE DIFFERENTIAL ⇨ CURRENT DIFFERENTIAL** menu.

The fiber optic modules (7A to 7W) are designed for back-to-back connections of UR-series relays only. For connections to higher-order systems, use the 72 to 77 modules or the 2A and 2B modules.

3.4.1 Fiber: LED and ELED transmitters

The following figure shows the configuration for the 7A, 7B, 7C, 7H, 7I, and 7J fiber-only modules.

Figure 3-35: LED and ELED fiber modules

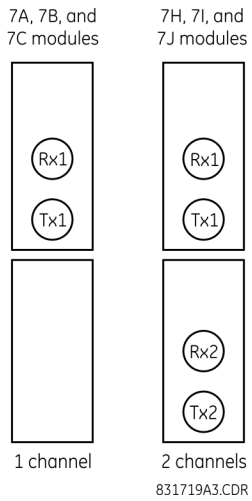

3.4.2 Fiber laser transmitters

The following figure shows the configuration for the 72, 73, 7D, and 7K fiber-laser modules.

Figure 3-36: 7x Laser fiber modules

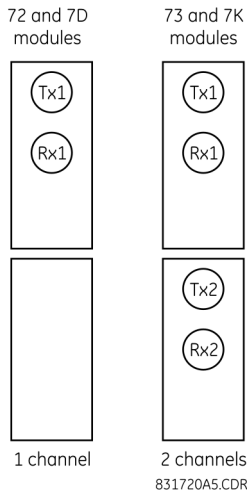

The following figure shows configuration for the 2I and 2J fiber-laser modules.

Figure 3-37: 2I and 2J laser fiber modules

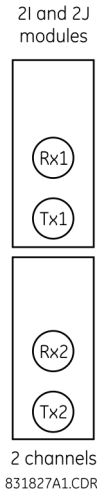

CAUTION **Observing any fiber transmitter output can injure the eye.**

NOTICE When using a laser Interface, attenuators can be necessary to ensure that you do not exceed the maximum optical input power to the receiver.

3.4.3 G.703 interface

3.4.3.1 Description

G.703 is an International Telecommunications Union (ITU) standard for the transmission of data and voice signals. Modules 7R (one channel) and 7S (two channels) apply.

The following figure shows the 64K ITU G.703 co-directional interface configuration. This is module 7S.

The G.703 module is fixed at 64 kbps. The **SETTINGS ⇨ PRODUCT SETUP ⇨⇩ DIRECT I/O ⇨ DIRECT I/O DATA RATE** setting is not applicable to this module.

AWG 24 twisted shielded pair wiring is recommended for external connections, with the shield grounded only at one end. Connecting the shield to pin X1a or X6a grounds the shield since these pins are connected internally to ground. Thus, if pin X1a or X6a is used to ground the shield at one end, do not ground the shield at the other end. This interface module is protected by surge suppression devices.

Figure 3-38: G.703 interface configuration

7S	G.703 channel 1	Shield	~1a
		Tx –	~1b
		Rx –	~2a
		Tx +	~2b
		Rx +	~3a
	Surge	⏚	~3b
	G.703 channel 2	Shield	~6a
		Tx –	~6b
		Rx –	~7a
		Tx +	~7b
		Rx +	~8a
	Surge	⏚	~8b

G.703 communications

842773A3.CDR

The following figure shows the typical pin interconnection between two G.703 interfaces. For the actual physical arrangement of these pins, see the Rear Terminal Layout section earlier in this chapter. All pin interconnections are to be maintained for a connection to a multiplexer.

Figure 3-39: Typical pin interconnection between two G.703 interfaces

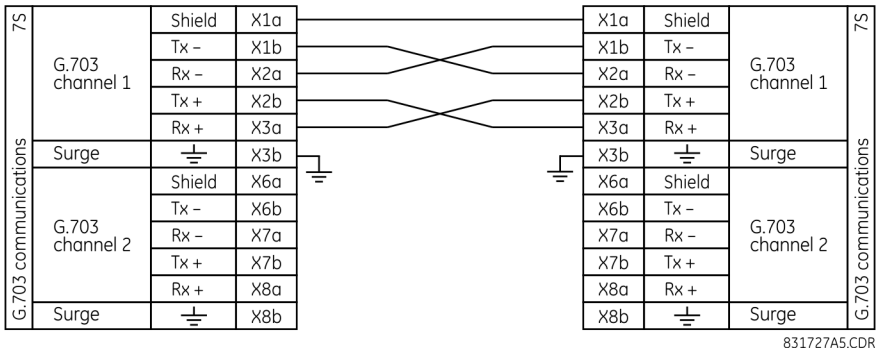

NOTE

Pin nomenclature differs from one manufacturer to another. It is not uncommon to see pinouts numbered TxA, TxB, RxA, and RxB. In such cases, assume that "A" is equivalent to "+" and "B" is equivalent to "–."

3.4.3.2 G.703 selection switch procedures

1. With the power to the relay off, remove the G.703 module (7R or 7S) as follows. Record the original location of the module to help ensure that the same or replacement module is inserted into the correct slot.
2. Simultaneously pull the ejector/inserter clips located at the top and at the bottom of each module in order to release the module for removal. (For more information on accessing modules, see the Maintenance chapter.)
3. Remove the module cover screw.
4. Remove the top cover by sliding it towards the rear and then lift it upwards.
5. Set the timing selection switches (channels 1 and 2) to the required timing modes.
6. Replace the top cover and the cover screw.
7. Re-insert the G.703 module. Take care to ensure that the correct module type is inserted into the correct slot position. The ejector/inserter clips located at the top and bottom of each module must be in the disengaged position as the module is inserted smoothly into the slot. Once the clips have cleared the raised edge of the chassis, engage the clips simultaneously. When the clips have locked into position, the module is inserted fully.

Figure 3-40: G.703 timing selection switch setting

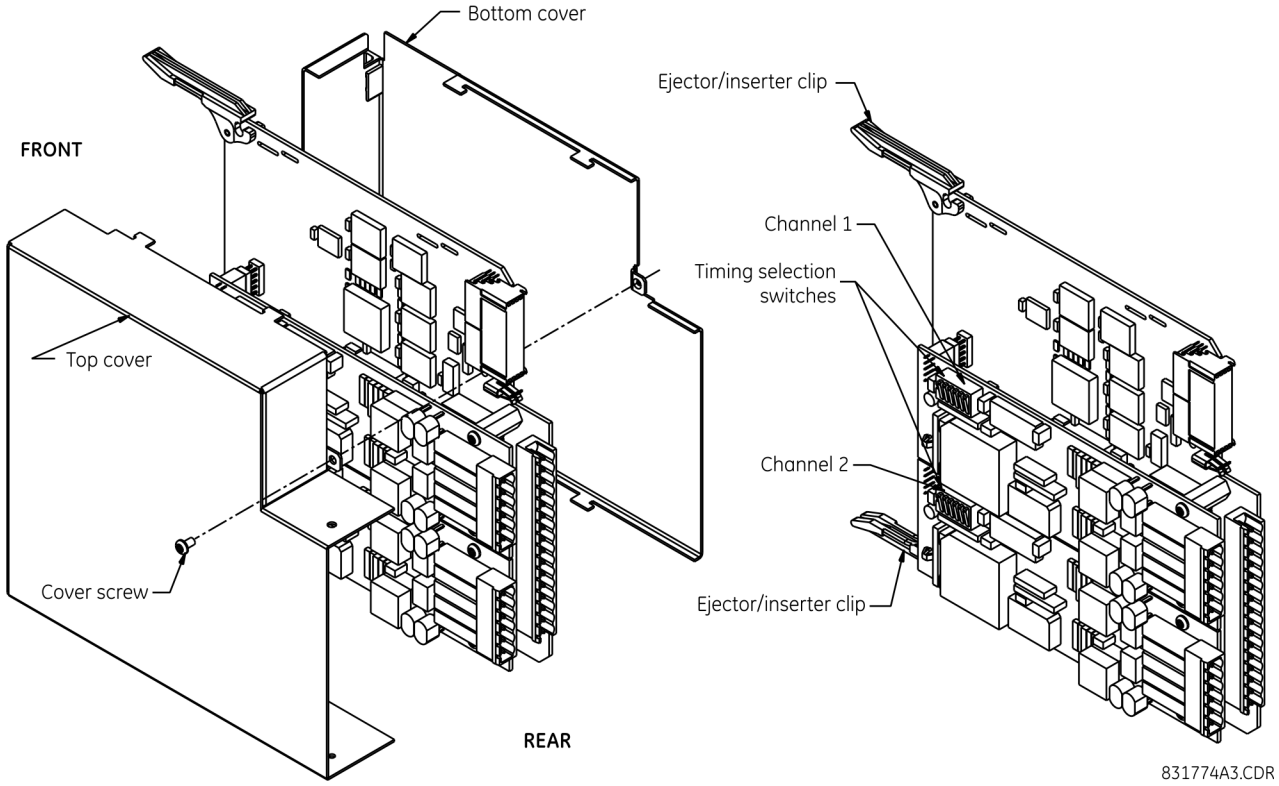

Table 3-6: G.703 timing selections

Switches	Function
S1	OFF → octet timing disabled ON → octet timing 8 kHz
S5 and S6	S5 = OFF and S6 = OFF → loop timing mode S5 = ON and S6 = OFF → internal timing mode S5 = OFF and S6 = ON → minimum remote loopback mode S5 = ON and S6 = ON → dual loopback mode

3.4.3.3 G.703 octet timing

If octet timing is enabled (ON), this 8 kHz signal is asserted during the violation of bit 8 (LSB) necessary for connecting to higher order systems. When L90s are connected back-to-back, octet timing is disabled (OFF).

3.4.3.4 G.703 timing modes

There are two timing modes for the G.703 module: internal timing mode and loop timing mode (default).

- **Internal Timing Mode** — The system clock is generated internally. Therefore, set the G.703 timing selection to internal timing mode for back-to-back (UR-to-UR) connections. For back-to-back connections, set octet timing (S1 = OFF) and timing mode to internal timing (S5 = ON and S6 = OFF).
- **Loop Timing Mode** — The system clock is derived from the received line signal. Therefore, set the G.703 timing selection to loop timing mode for connections to higher order systems. For connection to a higher order system (UR-to-multiplexer, factory defaults), set to octet timing (S1 = ON) and set timing mode to loop timing (S5 = OFF and S6 = OFF).

The switch settings for the internal and loop timing modes are shown.

Figure 3-41: Switches

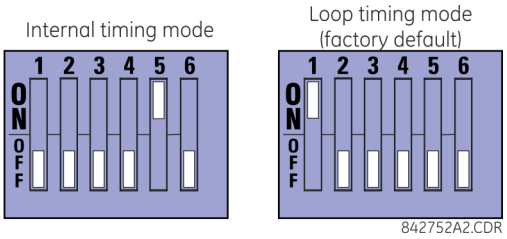

3.4.3.5 G.703 test modes

In *minimum remote loopback mode*, the multiplexer is enabled to return the data from the external interface without any processing to assist in diagnosing G.703 line-side problems irrespective of clock rate. Data enters from the G.703 inputs, passes through the data stabilization latch that also restores the proper signal polarity, passes through the multiplexer, and then returns to the transmitter. The differential received data is processed and passed to the G.703 transmitter module after which point the data is discarded. The G.703 receiver module is fully functional and continues to process data and passes it to the differential Manchester transmitter module. Since timing is returned as it is received, the timing source is expected to be from the G.703 line side of the interface.

Figure 3-42: G.703 minimum remote loopback mode

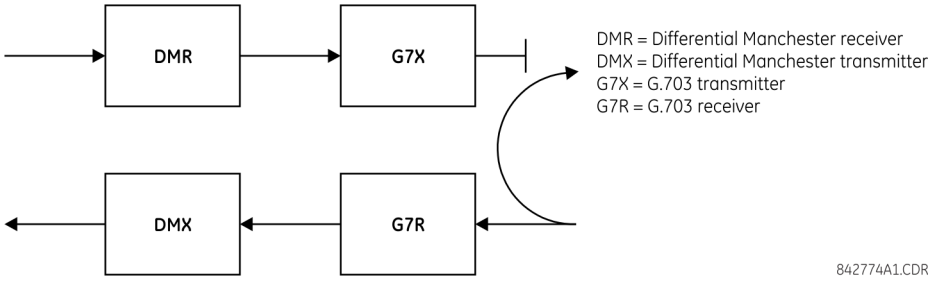

In *dual loopback mode*, the multiplexers are active and the functions of the circuit are divided into two with each receiver/transmitter pair linked together to deconstruct and then reconstruct their respective signals. Differential Manchester data enters the Differential Manchester receiver module and then is returned to the differential Manchester transmitter module. Likewise, G.703 data enters the G.703 receiver module and is passed through to the G.703 transmitter module to be returned as G.703 data. Because of the complete split in the communications path and because, in each case, the clocks are extracted and reconstructed with the outgoing data, in this mode there must be two independent sources of timing. One source lies on the G.703 line side of the interface while the other lies on the differential Manchester side of the interface.

Figure 3-43: G.703 dual loopback mode

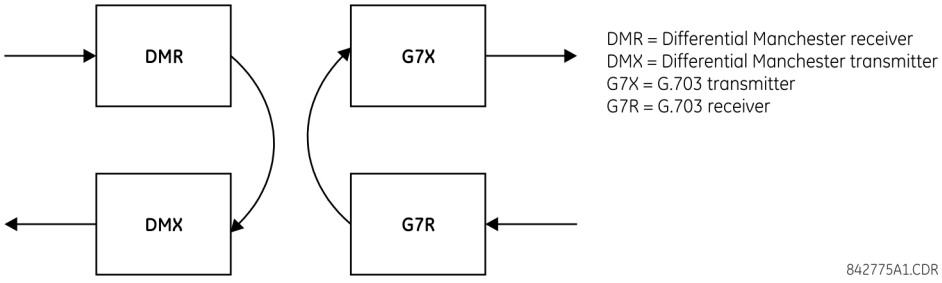

3.4.4 RS422 interface

3.4.4.1 Description

There are three RS422 inter-relay communications modules available: single-channel (module 7T), dual-channel (module 7W), and dual-channel dual-clock RS422 (module 7V). The modules can be configured to run at 64 or 128 kbps. AWG 24 twisted shielded pair cable is recommended for external connections. These modules are protected by optically-isolated surge suppression devices.

NOTE

The two-channel two-clock RS422 interface (module 7V) is intended for use with two independent channel banks with two independent clocks. It is intended for situations where a single clock for both channels is not acceptable.

The shield pins (6a and 7b) are connected internally to the ground pin (8a). Proper shield termination is as follows:

- Site 1 — Terminate shield to pins 6a or 7b or both
- Site 2 — Terminate shield to COM pin 2b

Match the clock terminating impedance with the impedance of the line.

Figure 3-44: RS422 interface connections

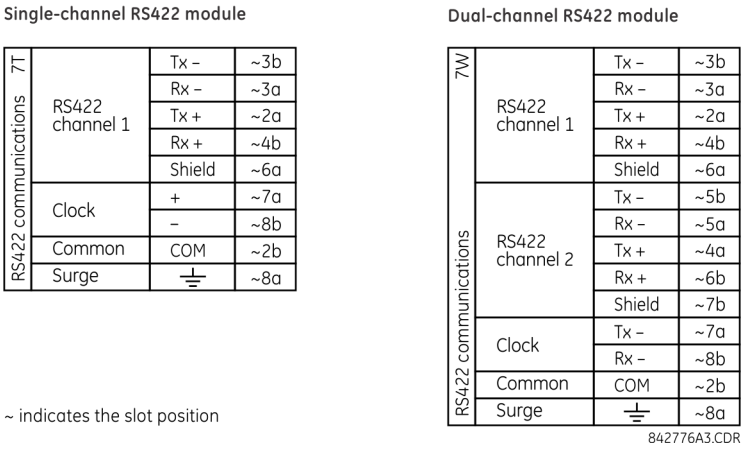

The following figure shows the typical pin interconnection between two single-channel RS422 interfaces installed in slot W. All pin interconnections are to be maintained for a connection to a multiplexer.

Figure 3-45: Typical pin interconnection between two RS422 interfaces

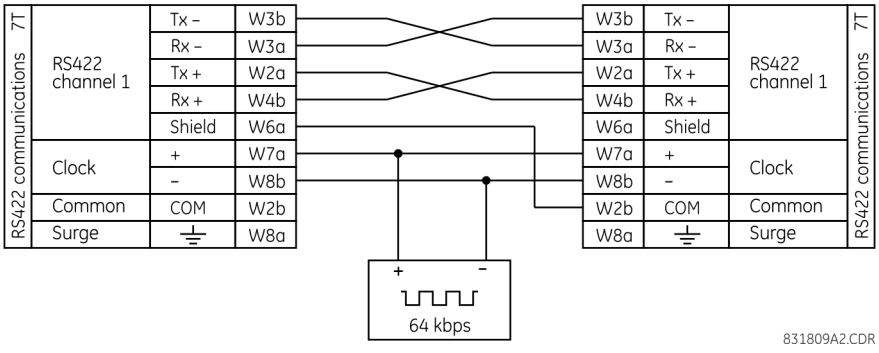

3.4.4.2 Two-channel application via multiplexers

The RS422 interface can be used for single-channel or two-channel applications over SONET/SDH or multiplexed systems. When used in single-channel applications, the RS422 interface links to higher-order systems in a typical way, observing transmit (Tx), receive (Rx), and send timing (ST) connections. However, when used in two-channel applications, certain

criteria must be followed since there is one clock input for the two RS422 channels. The system functions correctly when the following connections are observed and your data module has a terminal timing feature. Terminal timing is a common feature in most synchronous data units that allows the module to accept timing from an external source. Using the terminal timing feature, two-channel applications can be achieved if these connections are followed: the send timing outputs from the multiplexer (data module 1) connects to the clock inputs of the UR RS422 interface in the usual way. In addition, the send timing outputs of data module 1 are also paralleled to the terminal timing inputs of data module 2. By using this configuration, the timing for both data modules and both UR RS422 channels is derived from a single clock source. As a result, data sampling for both of the UR RS422 channels is synchronized via the send timing leads on data module 1, shown as follows. If the terminal timing feature is not available or this type of connection is not wanted, the G.703 interface is a viable option that does not impose timing restrictions.

Figure 3-46: Timing configuration for RS422 two-channel, three-terminal application

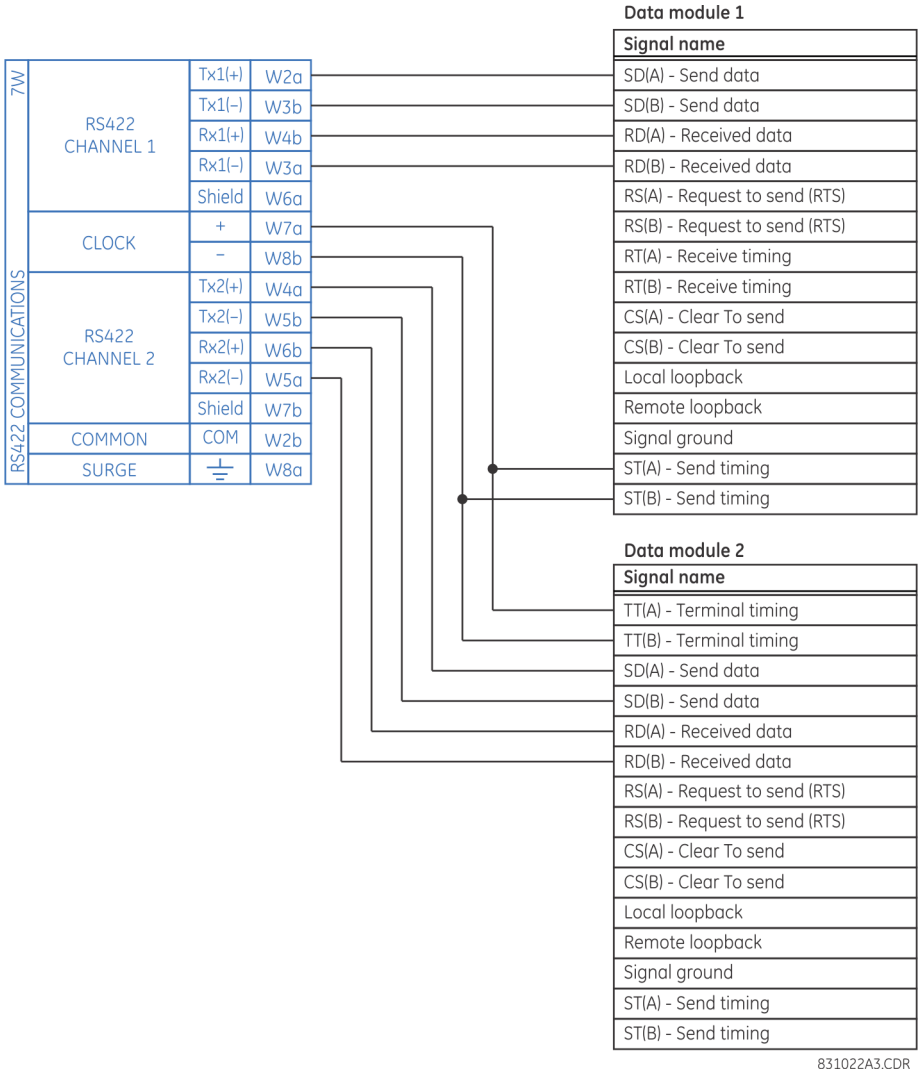

Data module 1 provides timing to the L90 RS422 interface via the ST(A) and ST(B) outputs. Data module 1 also provides timing to data module 2 TT(A) and TT(B) inputs via the ST(A) and AT(B) outputs. The data module pin numbers have been omitted in the figure because they vary by manufacturer.

3.4.4.3 Transmit timing

The RS422 interface accepts one clock input for transmit timing. It is important that the rising edge of the 64 kHz transmit timing clock of the multiplexer interface is sampling the data in the center of the transmit data window. Therefore, it is important to confirm clock and data transitions to ensure proper system operation. For example, the following figure shows the positive edge of the Tx clock in the center of the Tx data bit.

Figure 3-47: Clock and data transitions

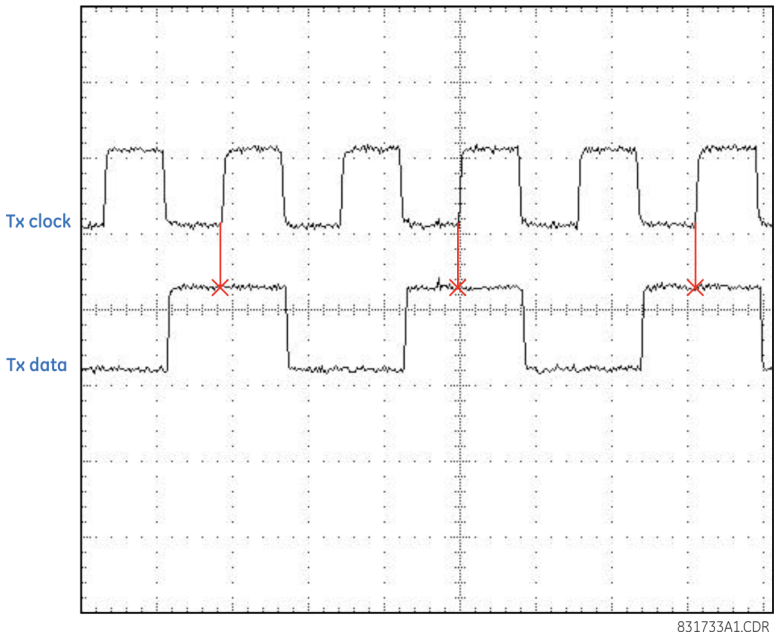

3.4.4.4 Receive timing

The RS422 interface utilizes NRZI-MARK modulation code and therefore does not rely on an Rx clock to recapture data. NRZI-MARK is an edge-type, invertible, self-clocking code.

To recover the Rx clock from the data-stream, an integrated digital phase lock loop (DPLL) circuit is utilized. The DPLL is driven by an internal clock, which is 16-times over-sampled, and uses this clock along with the data-stream to generate a data clock that can be used as the serial communication controller (SCC) receive clock.

3.4.5 Two-channel two-clock RS422 interface

The two-channel two-clock RS422 interface (module 7V) is for use with the synchrophasor feature. The figure shows the module connections.

Figure 3-48: Two-channel two-clock RS422 interface connections

7V	RS422 channel 1	Tx –	~3b
		Rx –	~3a
		Tx +	~2a
		Rx +	~4b
		Shield	~6a
RS422 communications	RS422 channel 2	Tx –	~5b
		Rx –	~5a
		Tx +	~4a
		Rx +	~6b
		Shield	~7b
	Channel 1 clock	Tx –	~7a
		Rx –	~8b
	Channel 2 clock	Tx –	~1b
		Rx –	~1a
	Common	COM	~2b
	Surge	⏚	~8a

842802A2.CDR

3.4.6 RS422 and fiber interface

The following figure shows the combined RS422 plus fiberoptic interface configuration at 64 K baud. The 7L, 7M, 7N, 7P, and 74 modules are used in two-terminal with a redundant channel or three-terminal configurations where channel 1 is employed via the RS422 interface (possibly with a multiplexer) and channel 2 via direct fiber.

AWG 20 to 24 twisted shielded pair wiring is recommended for external RS422 connections. Ground the shield only at one end. For the direct fiber channel, address power budget issues properly.

NOTICE When using a laser interface, attenuators can be necessary to ensure that you do not exceed maximum optical input power to the receiver.

Figure 3-49: RS422 and fiber interface connection

7L, 7M, 7N, 7P, and 74	Clock channel 1	+	~1a
		–	~1b
	Common	COM	~2b
RS422 communications	RS422 channel 1	Tx –	~3b
		Rx –	~3a
		Tx +	~2a
		Rx +	~4b
		Shield	~6a
	Fiber channel 2	Tx2	Rx2
	Surge	⏚	~8a

842777A3.CDR

The connections shown in the figure are for multiplexers configured as data communications equipment (DCE) units.

3.4.7 G.703 and fiber interface

The following figure shows the combined G.703 plus fiber-optic interface configuration at 64 kbps. The 7E, 7F, 7G, 7Q, and 75 modules are used in configurations where channel 1 is employed via the G.703 interface (possibly with a multiplexer) and channel 2 via direct fiber. AWG 24 twisted shielded pair wiring is recommended for external G.703 connections connecting the shield to pin 1a at one end only. For the direct fiber channel, address power budget issues properly. See previous sections for details on the G.703 and fiber interfaces.

NOTICE When using a laser interface, attenuators can be necessary to ensure that you do not exceed the maximum optical input power to the receiver.

Figure 3-50: G.703 and fiber interface connection

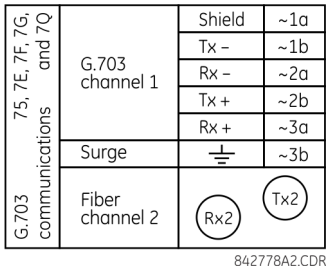

3.4.8 IEEE C37.94 interface

IEEE C37.94 is a standard interface between teleprotection equipment and digital multiplexers.

The UR-series IEEE C37.94 modules (module types 2I, 2J, 76, and 77) are designed to interface with IEEE C37.94 compliant digital multiplexers or an IEEE C37.94 compliant interface converter for use with direct input and output applications. The IEEE C37.94 standard defines a point-to-point optical link for synchronous data between a multiplexer and a teleprotection device. Data speed is typically 64 kbps, but the standard provides for speeds up to 64*n* kbps, where n = 1, 2,..., 12. The UR-series C37.94 communication modules are either 64 kbps (with n fixed at 1) or 128 kbps (with n fixed at 2). The frame is a valid International Telecommunications Union (ITU-T) recommended G.704 pattern from the standpoint of framing and data rate. The frame is 256 bits and is repeated at a frame rate of 8000 Hz, with a resultant bit rate of 2048 kbps.

The specifications for the module are as follows:

- IEEE standard — C37.94 for 2 × 64 kbps optical fiber interface (for 76 and 77 modules)
- Fiber-optic cable type — 50 nm or 62.5 µm core diameter optical fiber
- Fiber-optic mode — multimode
- Fiber-optic cable length — up to 2 km
- Fiber-optic connector — type ST
- Wavelength — 820 ±40 nm
- Connection — as per all fiber-optic connections, a Tx-to-Rx connection is required

The UR-series C37.94 module can be connected directly to any compliant digital multiplexer that supports the IEEE C37.94 standard. The figure shows the concept.

Figure 3-51: IEEE C37.94 connection to compliant digital multiplexer

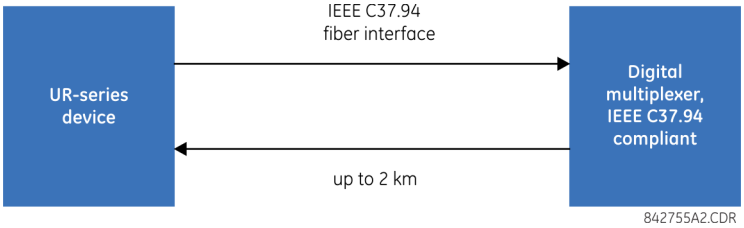

The UR-series C37.94 communication module can be connected to the electrical interface (G.703, RS422, or X.21) of a non-compliant digital multiplexer via an optical-to-electrical interface converter that supports the IEEE C37.94 standard. The following figure shows the concept.

Figure 3-52: IEEE C37.94 connection to non-compliant digital multiplexer

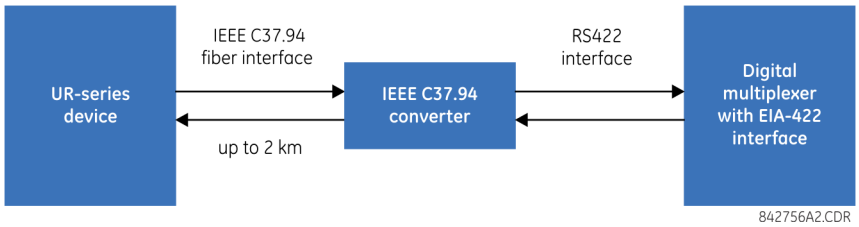

In 2008, GE Grid Solutions released revised modules 76 and 77 for C37.94 communication to enable multi-ended fault location functionality with firmware 5.60 release and higher. All modules 76 and 77 shipped since the change support this feature and are fully backward compatible with firmware releases below 5.60. For customers using firmware release 5.60 and higher, the module can be identified with "Rev D" printed on it and is to be used on all ends of L90 communication for two and three terminal applications. Failure to use it at all ends results in intermittent communication alarms. For customers using firmware revisions below 5.60, it is not required to match the revision of the modules installed.

The UR-series C37.94 communication module has six switches to set the clock configuration. The following figure shows the functions of these control switches.

Figure 3-53: Switches

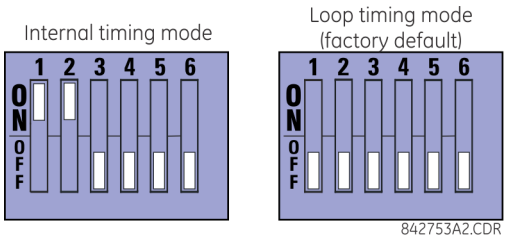

For the internal timing mode, the system clock is generated internally. Therefore, set the timing switch selection to internal timing for relay 1 and loop timed for relay 2. There must be only one timing source configured.

For the looped timing mode, the system clock is derived from the received line signal. Therefore, set the timing selection to loop timing mode for connections to higher order systems.

The IEEE C37.94 communications module cover removal procedure is as follows:

1. With power to the relay off, remove the IEEE C37.94 module (type 2I, 2J, 76, or 77 module) as follows. Record the original location of the module to help ensure that the same or replacement module is inserted into the correct slot.
2. Simultaneously pull the ejector/inserter clips located at the top and bottom of each module in order to release the module for removal.
3. Remove the module cover screw.
4. Remove the top cover by sliding it towards the rear and then lift it upwards.
5. Set the timing selection switches (channels 1 and 2) to the required timing modes (see description earlier).
6. Replace the top cover and the cover screw.
7. Re-insert the IEEE C37.94 module. Take care to ensure that the correct module type is inserted into the correct slot position. The ejector/inserter clips located at the top and at the bottom of each module must be in the disengaged position as the module is inserted smoothly into the slot. Once the clips have cleared the raised edge of the chassis, engage the clips simultaneously. When the clips have locked into position, the module is inserted fully.

Figure 3-54: IEEE C37.94 timing selection switch setting

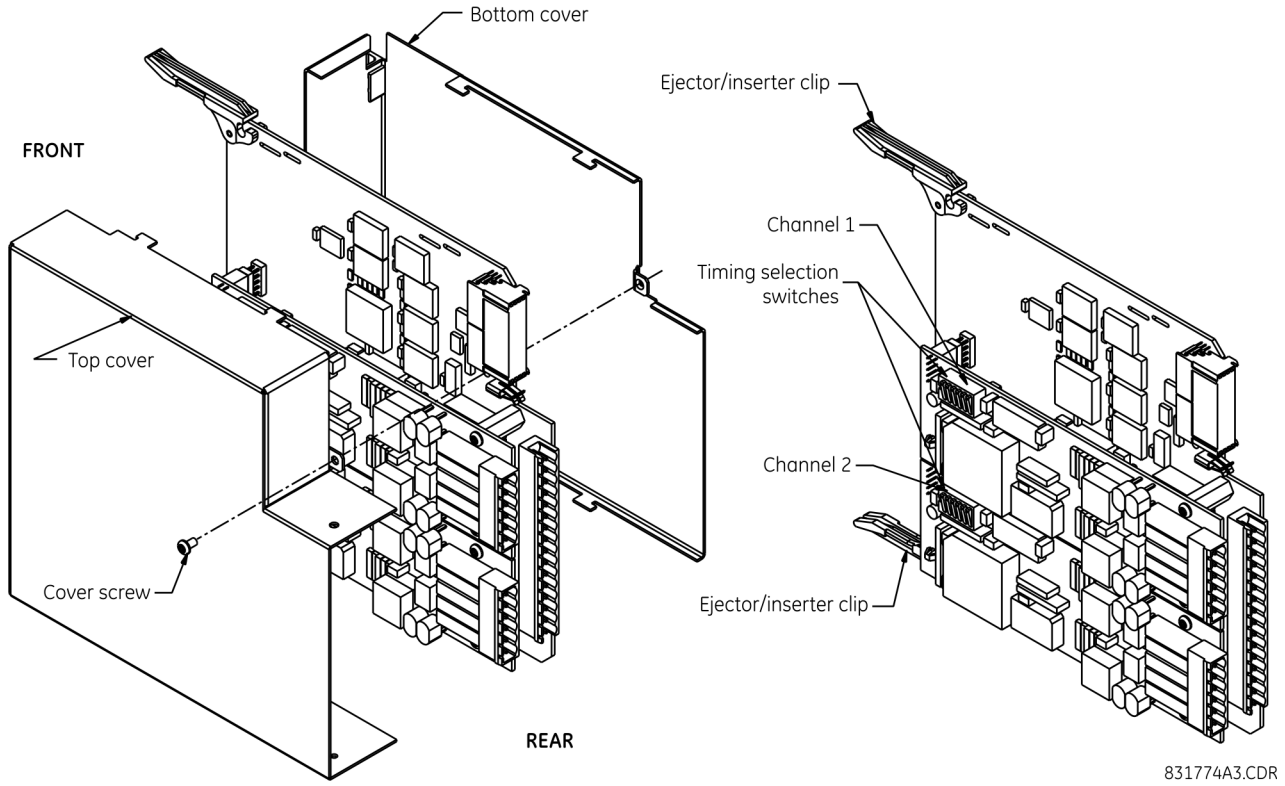

Modules shipped since January 2012 have status LEDs that indicate the status of the DIP switches, as shown in the following figure.

Figure 3-55: Status LEDs

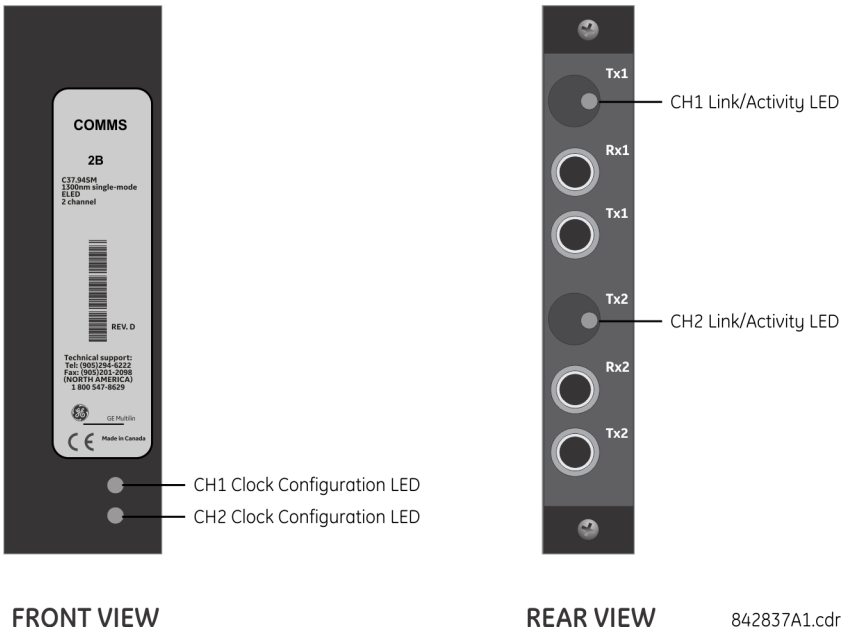

The clock configuration LED status is as follows:

- Flashing green — loop timing mode while receiving a valid data packet

- Flashing yellow — internal mode while receiving a valid data packet
- Solid red — (switch to) internal timing mode while not receiving a valid data packet

The link/activity LED status is as follows:

- Flashing green — FPGA is receiving a valid data packet
- Solid yellow — FPGA is receiving a "yellow bit" and remains yellow for each "yellow bit"
- Solid red — FPGA is not receiving a valid packet or the packet received is invalid

3.4.9 C37.94SM interface

The UR-series C37.94SM communication modules (2A and 2B) are designed to interface with modified IEEE C37.94 compliant digital multiplexers or IEEE C37.94 compliant interface converters that have been converted from 820 nm multi-mode fiber optics to 1300 nm ELED single-mode fiber optics. The IEEE C37.94 standard defines a point-to-point optical link for synchronous data between a multiplexer and a teleprotection device. This data is typically 64 kbps, but the standard provides for speeds up to 64*n* kbps, where *n* = 1, 2,..., 12. The UR-series C37.94SM communication module is 64 kbps only with *n* fixed at 1. The frame is a valid ITU-recommended G.704 pattern from the standpoint of framing and data rate. The frame is 256 bits and is repeated at a frame rate of 8000 Hz, with a resultant bit rate of 2048 kbps.

The specifications for the module are as follows:

- Emulated IEEE standard — Emulates C37.94 for 1 × 64 kbps optical fiber interface (modules set to *n* = 1 or 64 kbps)
- Fiber-optic cable type — 9/125 μm core diameter optical fiber
- Fiber-optic mode — Single-mode, ELED compatible with HP HFBR-1315T transmitter and HP HFBR-2316T receiver
- Fiber-optic cable length — Up to 11.4 km
- Fiber-optic connector — Type ST
- Wavelength — 1300 ±40 nm
- Connection — As per all fiber-optic connections, a Tx-to-Rx connection is required

The UR-series C37.94SM communication module can be connected directly to any compliant digital multiplexer that supports C37.94SM, as shown.

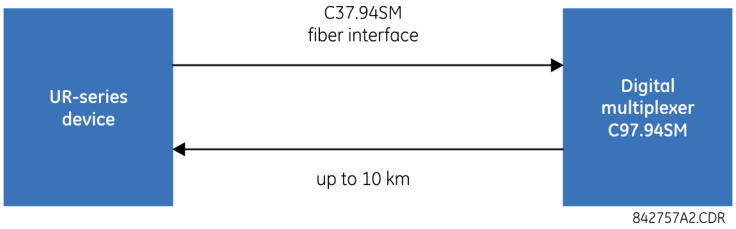

It also can be connected directly to any other UR-series relay with a C37.94SM module, as shown.

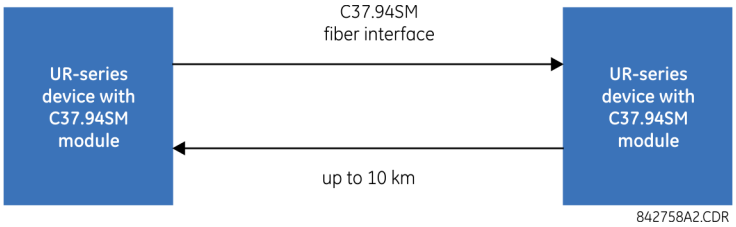

In 2008, GE Grid Solutions released revised modules 2A and 2B for C37.94SM communication to enable multi-ended fault location functionality with firmware 5.60 release and higher. All modules 2A and 2B shipped since the change support this feature and are fully backward compatible with firmware releases below 5.60. For customers using firmware release 5.60 and higher, the module can be identified with "Rev D" printed on it and is to be used on all ends of L90 communication for two and three terminal applications. Failure to use it at all ends results in intermittent communication alarms. For customers using firmware revisions below 5.60, it is not required to match the revision of the modules installed.

The UR-series C37.94SM module has six switches that are used to set the clock configuration. The following figure shows the functions of these control switches.

Figure 3-56: Switches

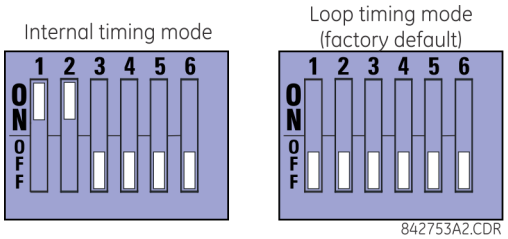

For the internal timing mode, the system clock is generated internally. Therefore, set the timing switch selection to internal timing for relay 1 and loop timed for relay 2. There must be only one timing source configured.

For the looped timing mode, the system clock is derived from the received line signal. Therefore, set the timing selection to loop timing mode for connections to higher-order systems.

The C37.94SM communications module cover removal procedure is as follows:

1. With power to the relay off, remove the C37.94SM module (module 2A or 2B) as follows. Record the original location of the module to help ensure that the same or replacement module is inserted into the correct slot.
2. Simultaneously pull the ejector/inserter clips located at the top and at the bottom of each module in order to release the module for removal.
3. Remove the module cover screw.
4. Remove the top cover by sliding it towards the rear and then lift it upwards.
5. Set the timing selection switches (channels 1 and 2) to the required timing modes (see description earlier).
6. Replace the top cover and the cover screw.
7. Re-insert the C37.94SM module. Take care to ensure that the correct module type is inserted into the correct slot position. The ejector/inserter clips located at the top and at the bottom of each module must be in the disengaged position as the module is inserted smoothly into the slot. Once the clips have cleared the raised edge of the chassis, engage the clips simultaneously. When the clips have locked into position, the module is inserted fully.

3

Figure 3-57: C37.94SM timing selection switch setting

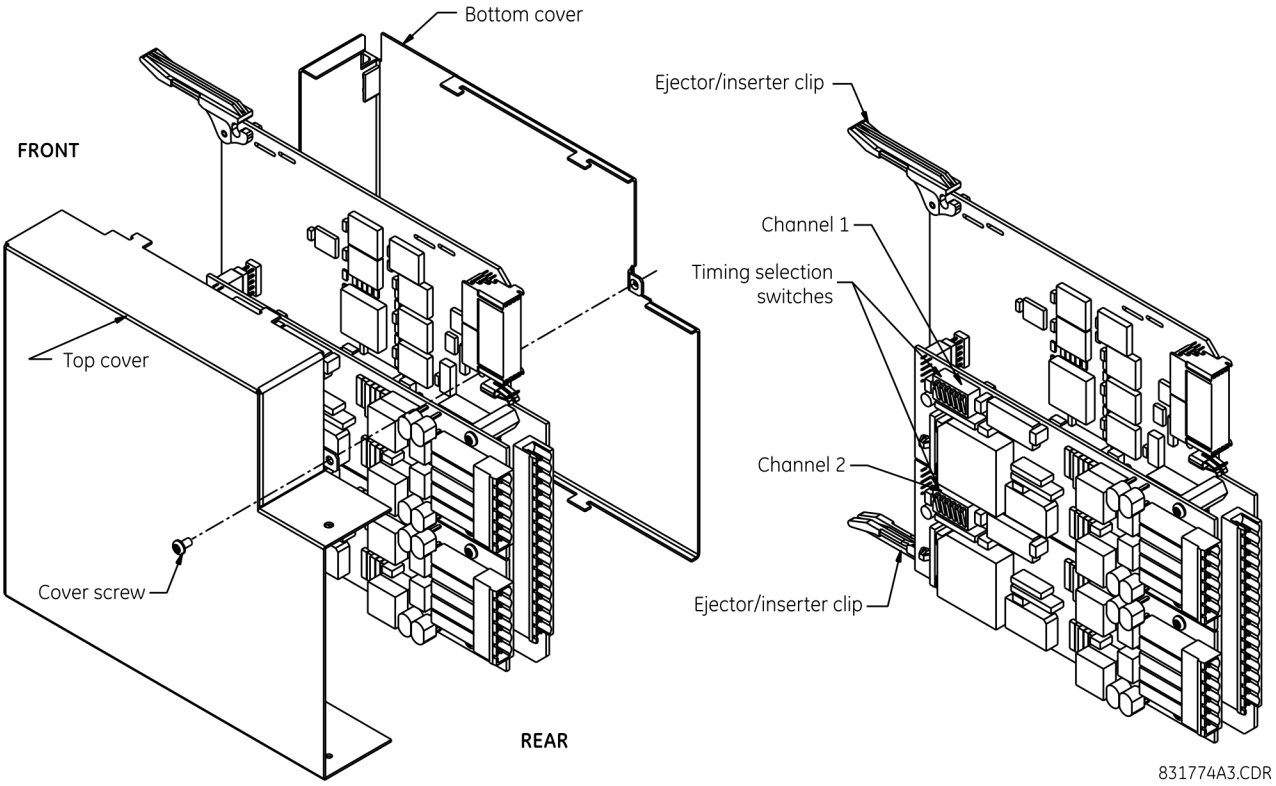

Modules shipped since January 2012 have status LEDs that indicate the status of the DIP switches, as shown in the following figure.

Figure 3-58: Status LEDs

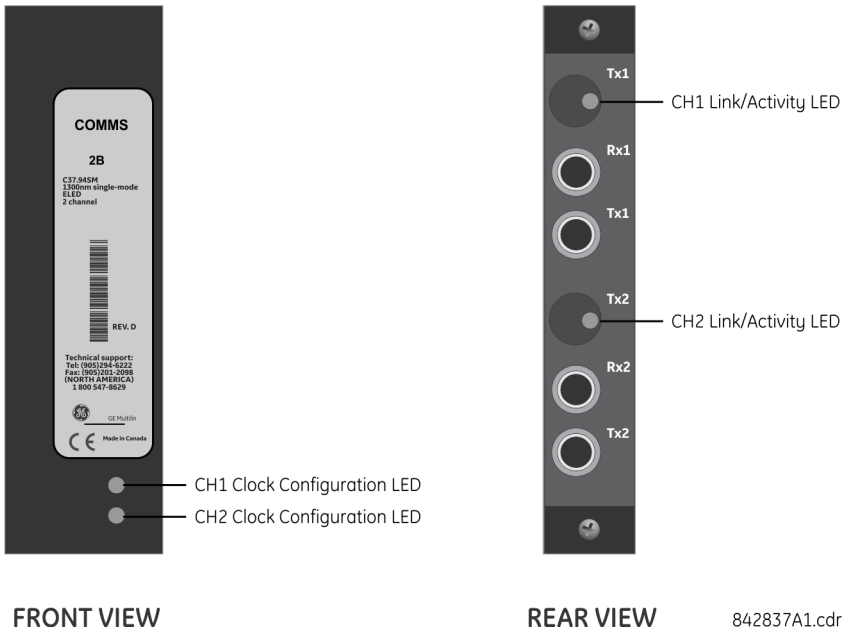

The clock configuration LED status is as follows:

- Flashing green — loop timing mode while receiving a valid data packet

- Flashing yellow — internal mode while receiving a valid data packet
- Solid red — (switch to) internal timing mode while not receiving a valid data packet

The link/activity LED status is as follows:

- Flashing green — FPGA is receiving a valid data packet
- Solid yellow — FPGA is receiving a "yellow bit" and remains yellow for each "yellow bit"
- Solid red — FPGA is not receiving a valid packet or the packet received is invalid

3.5 Activate relay

The relay is in the default “Not Programmed” state when it leaves the factory. When powered up successfully, looking at the front panel, the "Trouble" LED is on and the "In Service" LED is off. The relay in the “Not Programmed” state blocks signaling of any output relay. These conditions remain until the relay is explicitly put into “Programmed” state.

RELAY SETTINGS: **Not Programmed**	When the relay is powered up, the "Trouble LED" is on, the "In Service" LED is off, and this message displays, indicating that the relay is in the "Not Programmed" state and is safeguarding (output relays blocked) against the installation of a relay whose settings have not been entered. This message remains until the relay is explicitly put into "Programmed" state.

The relay can be activated on the front panel or in the EnerVista software.

To activate the relay using the front panel:

1. Press the **MENU** key until the **SETTINGS** header flashes momentarily and the **PRODUCT SETUP** message displays.
2. Press the **MESSAGE** right arrow until the **SECURITY** message displays.
3. Press the **MESSAGE** down arrow until the **INSTALLATION** message displays.
4. Press the **MESSAGE** right arrow until the **RELAY SETTINGS: Not Programmed** message displays.

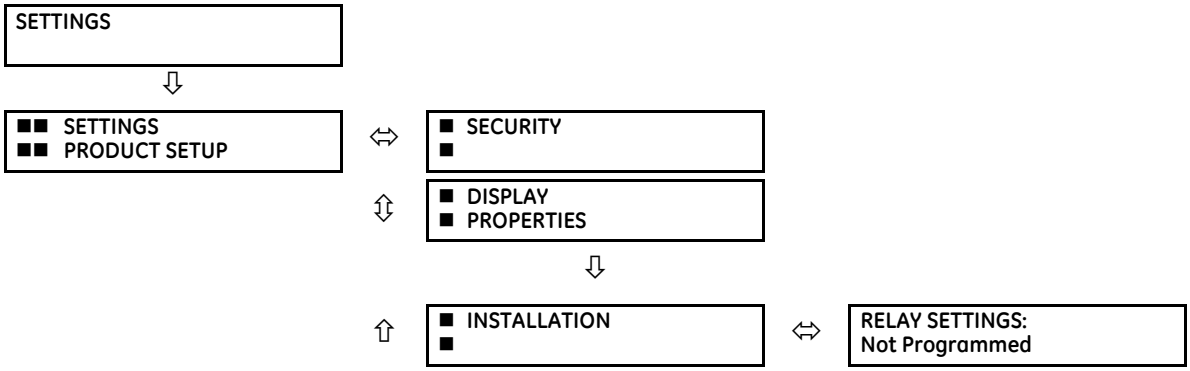

5. After the **RELAY SETTINGS: Not Programmed** message displays, press a **VALUE** key to change the selection to "Programmed."
6. Press the **ENTER** key to save the change.

7. When the "NEW SETTING HAS BEEN STORED" message appears, the relay is in "Programmed" state and the "In Service" LED turns on.

To activate the relay using EnerVista software:

1. Navigate to **Settings > Product Setup > Installation** and change the **Relay Settings** field to "Programmed."
2. Save the change.

3.6 Install software

3.6.1 EnerVista communication overview

The EnerVista UR Setup software communicates to the relay via the front panel RS232 or USB port or the rear RS485 / Ethernet ports.

3

To communicate via the RS232 port, use a standard straight-through serial cable. Connect the DB-9 male end to the relay and the DB-9 or DB-25 female end to the computer COM2 port as described in the CPU Communication Ports section earlier in this chapter.

Figure 3-59: Relay communication options

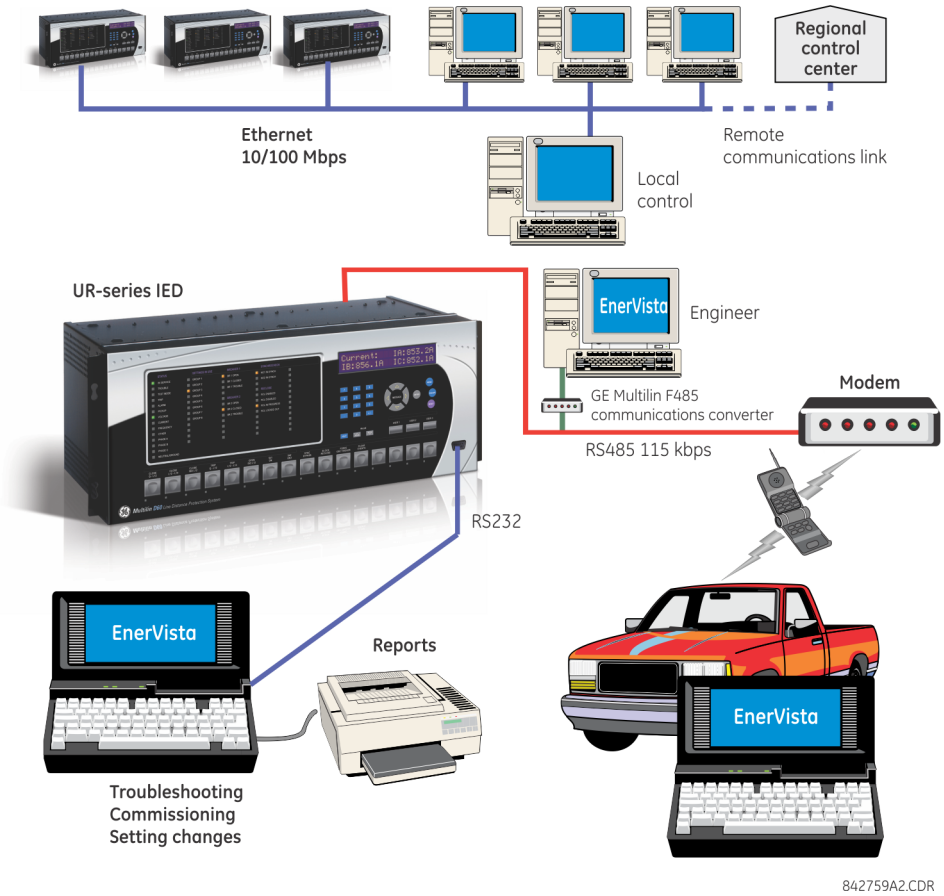

To communicate through the L90 rear RS485 port from a computer RS232 port, the GE Grid Solutions RS232/RS485 converter box is required. This device (catalog number F485) connects to the computer using a straight-through serial cable. A shielded twisted-pair wire (20, 22, or 24 AWG) connects the F485 converter to the L90 rear communications port. The converter terminals (+, –, GND) are connected to the L90 communication module (+, –, COM) terminals. See the CPU Communication Ports section in chapter 3 for details. The line is terminated with an R-C network (that is, 120 Ω, 1 nF) as described in this chapter.

3.6.2 System requirements

The relay front panel or the EnerVista UR Setup software can be used to communicate with the relay. The software interface is the preferred method to edit settings and view actual values because the computer monitor can display more information.

The system requirements for the EnerVista software are as follows:

- Intel Pentium processor (dual core) or (recommended) Core Duo
- Microsoft Windows 7 with Service Pack 1 (32-bit or 64-bit), Windows 10, Windows Server 2008 Release 2 with Service Pack 1 (64-bit), or Windows Server 2012 Release 2 (64-bit), in the required EnerVista language, such as French or Japanese
- 1 GB free hard drive space
- 2 GB RAM
- 1280 x 800 display screen

3.6.3 Install software

After ensuring that the requirements for using EnerVista UR Setup software are met, there are three ways to install the software:

- From the DVD
- Download EnerVista Launchpad software from http://www.gegridsolutions.com/multilin and install it
- Download the EnerVista UR Setup software from http://www.gegridsolutions.com/multilin and install it

Install on a computer that has an operating system in the required language, for example a German operating system for use with EnerVista software in German.

NOTE

The front panel can be switched in the EnerVista software between enhanced and basic panels under **Maintenance > Change Front Panel**.

To install the software from the DVD and using EnerVista Launchpad:

1. Insert the DVD into the DVD drive of your computer.
2. Click the **Install Now** button and follow the instructions.
3. When installation is complete, start the EnerVista Launchpad application.
4. Click the **IED Setup** section of the **Launch Pad** window.

Figure 3-60: Adding a UR device in Launchpad window

5. In the EnerVista Launch Pad window, click the **Add Product** button and select the appropriate product as follows. Select the **Web** option to ensure the most recent software release, or select **CD** if you do not have an Internet connection, then click the **Add Now** button to list software items for the product. EnerVista Launchpad obtains the software from the Internet or DVD and automatically starts the installation program after prompting about updates.

   From the web, the software is downloaded. A wizard opens.

3

Figure 3-61: Identifying the UR device type

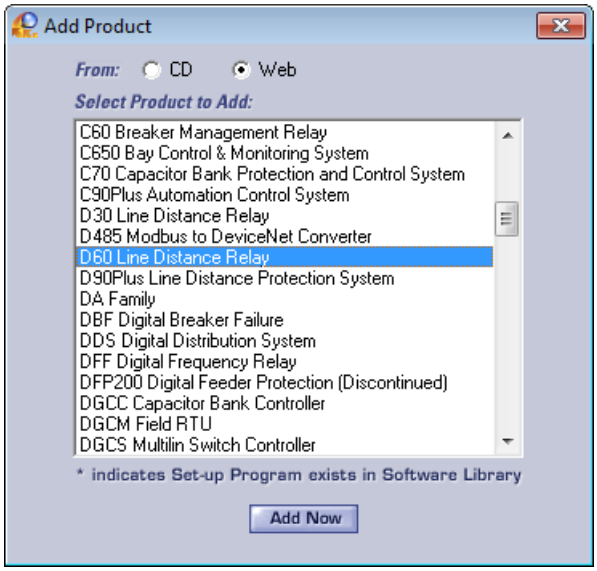

6. In the wizard, click the **Next** button and complete the process. The files are installed in the directory indicated, and the installation program automatically creates icons and adds an entry to the Windows start menu.

   The UR device is added to the EnerVista Launchpad window, as shown.

Figure 3-62: UR device added to Launchpad window

7. For other than English, configure the language for the front panel in the EnerVista software under **Settings > Product Setup > Display Properties**. User-entered strings are not translated, for example relay names, so setting the language now ensures that the names are entered/displayed in the required language. For the EnerVista software language, access the **View > Language** menu item.

3.7 Add device to software

You connect remotely to the L90 through the rear RS485 or Ethernet port with a computer running the EnerVista UR Setup software. The L90 also can be accessed locally with a computer through the front panel RS232 or USB port or the rear Ethernet port using the Quick Connect feature.

The following procedures are outlined:

- Add device for serial access; see the Configure Serial Connection section
- Add device for the rear Ethernet port; see the Configure Ethernet Connection section
- Add device for access using a modem; see the Configure Modem Connection section

- Connect locally with a computer through either the front RS232 or USB port or rear Ethernet port; see the Connect to the L90 section
- Discover automatically UR devices within a network; see the Automatic Discovery of UR Devices section

Devices in the Device Setup window are listed in the order entered.

Devices in the main software window are listed alphabetically. Use the **Device Name** to order them as required, for example B30 Odessa, B30 Truro, B90, T35.

You cannot import a file to add a device to the software. You can import settings as outlined at the end of the chapter.

The Quick Connect button also can be used to add devices. The device is added to a Quick Connect menu item in the Online Window area, cannot be moved from it to another grouping, and needs to be renamed in the Device Setup window. GE instead recommends using the Device Setup window to add devices, as outlined here.

3.7.1 Set IP address in UR

Implement IP addresses for the computer and a L90 device as follows.

The UR family supports the use of subnetworks as documented in RFC 950, which divides class-based networks into subnetworks (non-CIDR). The classes and IP address ranges are defined as follows.

Table 3-7: IP address classes

Classes	IP address range	Default subnet mask address	UR devices
A	1.0.0.0 to 127.255.255.255	255.0.0.0	65,535 or more
B	128.0.0.0 to 191.255.255.255	255.255.0.0	255 to 65,534
C	192.0.0.0 to 223.255.255.255	255.255.255.0	0 to 254
D	224.0.0.0 to 239.255.255.255	(Reserved for multicasting)	
E	240.0.0.0 to 255.255.255.255	(Reserved)	

Both network and subnet addresses are contained within a range. The number of hosts determines the class and addresses as follows:

- Class A 255.0.0.0 — The first octet (255) specifies the network, the second to fourth octets (0) specify the subnet and host. Use this class when you have more than 65,535 hosts (UR devices).
- Class B 255.255.0.0 — The first two octets (255) specify the network, the third octet (0) specifies the subnet, and the fourth octet (0) specifies the host. Use this class when you have 255 to 65,534 hosts (UR devices).
- Class C 255.255.255.0 — The first three octets (255) specify the network and the last octet (0) specifies the subnet and host. Use this class when you have up to 254 hosts (UR devices).

An example of implementation is one computer and one UR device. Because there is one UR device, class C addressing is required. So we use UR 192.167.2.x with subnet mask 255.255.255.0 and computer 192.167.3.x with subnet mask 255.255.255.0.

For older, non-CIDR routing protocols, such as RIP version 1, follow these restrictions:

- Identical subnet masks — Use a single mask for all subnets within a network
- Contiguous subnets — The subnets must be contiguous and not split among networks. The subnets cannot pass traffic through other networks.

The IP and subnet addresses need to be added to the UR for Ethernet communication.

For serial communication, for example using the front RS232 port and the Quick Connect feature, the addresses are not required, but typically they are entered to add/configure devices for regular use.

1. On the front of the L90, press the **MENU** key until the **SETTINGS** menu displays.
2. Navigate to **SETTINGS** ⇨ **PRODUCT SETUP** ⇩⇨ **COMMUNICATIONS** ⇩⇨ **NETWORK** ⇨ **IP ADDRESS SETTING**.
3. Enter an IP address, for example "1.1.1.1," and press the **ENTER** key to save the value.
4. In the same menu, select the **SUBNET IP MASK** setting.

5. Enter a subnet IP address, for example "255.0.0.0," and press the **ENTER** key to save the value.

If using a blue or grey Ethernet cable, skip the rest of the this section. If using an orange cross-over Ethernet cable, the computer needs to be set up as follows.

1. Use an orange Ethernet cross-over cable to connect the computer to the rear Ethernet port. In case you need it, the following figure shows the pinout for an Ethernet cross-over cable.

Figure 3-63: Ethernet cross-over cable PIN layout

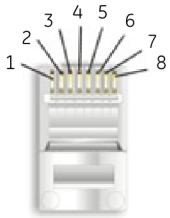

END 1		
Pin	Wire color	Diagram
1	White/orange	
2	Orange	
3	White/green	
4	Blue	
5	White/blue	
6	Green	
7	White/brown	
8	Brown	

END 2		
Pin	Wire color	Diagram
1	White/green	
2	Green	
3	White/orange	
4	Blue	
5	White/blue	
6	Orange	
7	White/brown	
8	Brown	

842799A1.CDR

Next, assign the computer an IP address compatible with the relay's IP address.

1. From the Windows desktop, right-click the **My Network Places** icon and select **Properties** to open the network connections window. Or in Windows 7, access the **Network and Sharing Center** in the Control Panel.

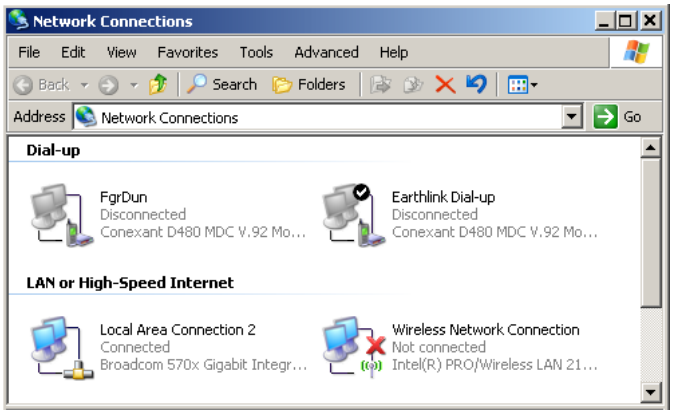

2. Right-click the **Local Area Connection** icon and select **Properties**.

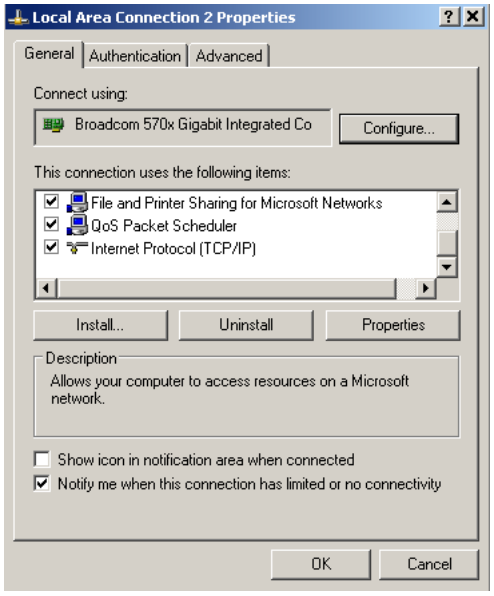

3. Select the **Internet Protocol (TCP/IP)** item from the list, and click the **Properties** button.

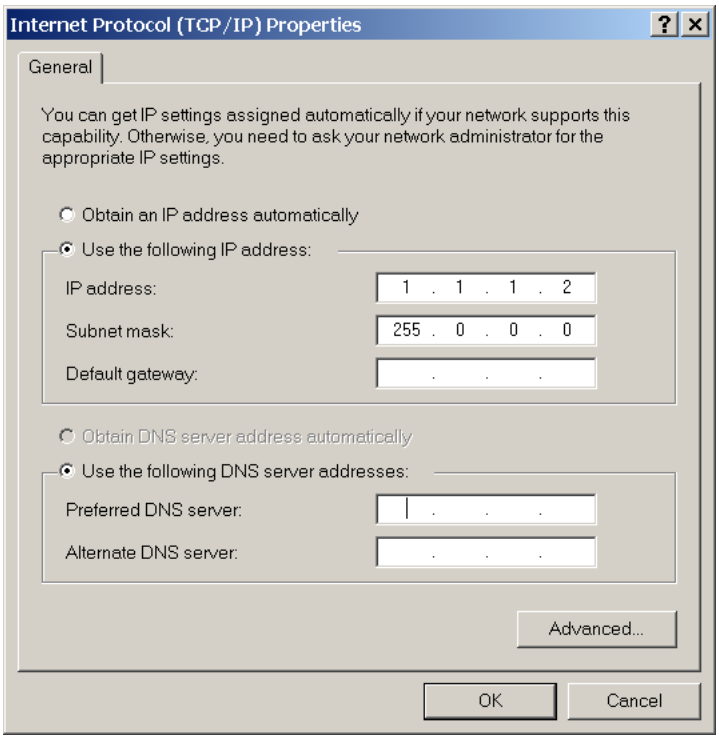

4. Click the "Use the following IP address" box.
5. Enter an **IP address** with the first three numbers the same as the IP address of the L90 relay and the last number different (in this example, 1.1.1.2).
6. Enter a subnet mask equal to the one set in the L90 (in this example, 255.0.0.0).
7. Click the **OK** button to save the values.

Before continuing, test the Ethernet connection.

1. Open a Windows console window, for example by selecting **Start > Run** from the Windows **Start** menu and typing "cmd" or clicking the **Start** button and entering "cmd".
2. Type the following command, substituting the IP address of 1.1.1.1 with yours:

```
C:\WINNT>ping 1.1.1.1
```

3. If the connection is successful, the system returns four replies similar to the following:

```
Pinging 1.1.1.1 with 32 bytes of data:
Reply from 1.1.1.1: bytes=32 time<10ms TTL=255
Reply from 1.1.1.1: bytes=32 time<10ms TTL=255
Reply from 1.1.1.1: bytes=32 time<10ms TTL=255
Reply from 1.1.1.1: bytes=32 time<10ms TTL=255
Ping statistics for 1.1.1.1:
    Packets: Sent = 4, Received = 4, Lost = 0 (0% loss),
Approximate round trip time in milliseconds:
    Minimum = 0ms, Maximum = 0ms, Average = 0 ms
```

4. Note that the values for `time` and `TTL` vary depending on local network configuration.
5. If the following sequence of messages appears when entering the `C:\WINNT>ping 1.1.1.1` command:

```
Pinging 1.1.1.1 with 32 bytes of data:
Request timed out.
Request timed out.
Request timed out.
Request timed out.
Ping statistics for 1.1.1.1:
    Packets: Sent = 4, Received = 0, Lost = 4 (100% loss),
Approximate round trip time in milliseconds:
    Minimum = 0ms, Maximum = 0ms, Average = 0 ms
Pinging 1.1.1.1 with 32 bytes of data:
```

verify the physical connection between the L90 and the computer, and double-check the programmed IP address in the **PRODUCT SETUP** ⇨⇩ **COMMUNICATIONS** ⇨⇩ **NETWORK** ⇨ **IP ADDRESS** setting, then repeat step 2.

6. If the following sequence of messages appears when entering the `C:\WINNT>ping 1.1.1.1` command:

```
Pinging 1.1.1.1 with 32 bytes of data:
Hardware error.
Hardware error.
Hardware error.
Hardware error.
Ping statistics for 1.1.1.1:
    Packets: Sent = 4, Received = 0, Lost = 4 (100% loss),
Approximate round trip time in milliseconds:
    Minimum = 0ms, Maximum = 0ms, Average = 0 ms
Pinging 1.1.1.1 with 32 bytes of data:
```

verify the physical connection between the L90 and the computer, and double-check the programmed IP address in the **PRODUCT SETUP** ⇨⇩ **COMMUNICATIONS** ⇨⇩ **NETWORK** ⇨ **IP ADDRESS** setting, then repeat step 2.

7. If the following sequence of messages appears when entering the `C:\WINNT>ping 1.1.1.1` command:

```
Pinging 1.1.1.1 with 32 bytes of data:
Destination host unreachable.
Destination host unreachable.
Destination host unreachable.
Destination host unreachable.
Ping statistics for 1.1.1.1:
    Packets: Sent = 4, Received = 0, Lost = 4 (100% loss),
Approximate round trip time in milliseconds:
    Minimum = 0ms, Maximum = 0ms, Average = 0 ms
Pinging 1.1.1.1 with 32 bytes of data:
```

verify the IP address is programmed in the local computer by entering the ipconfig command in the command window.

```
C:\WINNT>ipconfig
Windows IP Configuration
```

```
Ethernet adapter <F4FE223E-5EB6-4BFB-9E34-1BD7BE7F59FF>:
        Connection-specific DNS suffix. . :
        IP Address. . . . . . . . . . . . : 0.0.0.0
        Subnet Mask . . . . . . . . . . . : 0.0.0.0
        Default Gateway . . . . . . . . . :
Ethernet adapter Local Area Connection:
        Connection-specific DNS suffix  . :
        IP Address. . . . . . . . . . . . : 1.1.1.2
        Subnet Mask . . . . . . . . . . . : 255.0.0.0
        Default Gateway . . . . . . . . . :
C:\WINNT>
```

Before using the Quick Connect feature through the Ethernet port, disable any configured proxy settings in Internet Explorer.

1. Start the Internet Explorer software.
2. Select the **Tools > Internet Options** menu item and click the **Connections** tab.
3. Click on the **LAN Settings** button to open the following window.

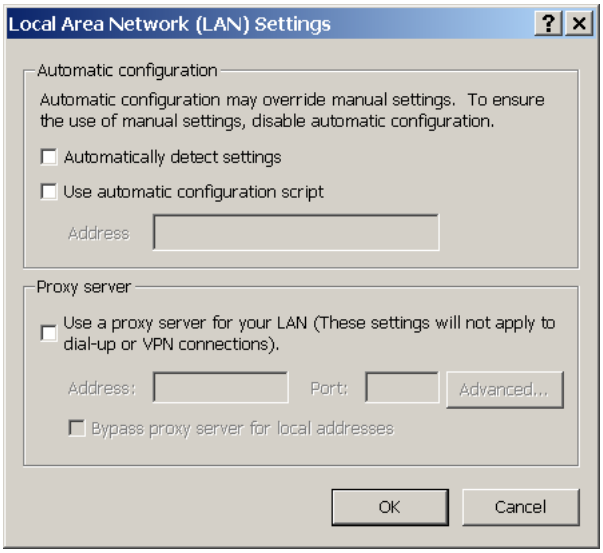

4. Ensure that the “Use a proxy server for your LAN” box is not checked.

If this computer is used to connect to the Internet, re-enable any proxy server settings after the computer has been disconnected from the L90 relay.

1. Start the Internet Explorer software.
2. Select the UR device from the EnerVista Launchpad to start EnerVista UR Setup.

3. Click the **Quick Connect** button to open the window.

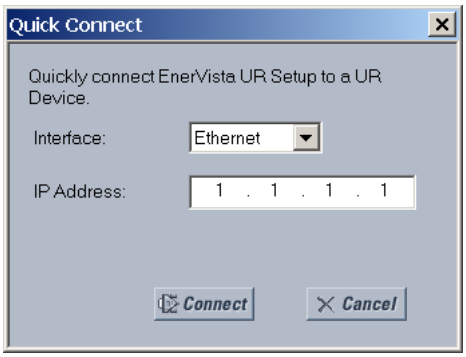

4. Select the **Ethernet** interface and enter the IP address assigned to the L90, then click the **Connect** button. The EnerVista UR Setup software creates a site named "Quick Connect" with a corresponding device also named "Quick Connect" and displays them on the left side of the screen.
5. Expand the sections to view data directly from the L90 device.

Each time that the EnerVista UR Setup software is initialized, click the **Quick Connect** button to establish direct communications to the L90. This ensures that configuration of the EnerVista UR Setup software matches the L90 model number.

When direct communications with the L90 via Ethernet is complete, make the following changes:

1. From the Windows desktop, right-click the **My Network Places** icon and select **Properties** to open the network connections window.
2. Right-click the **Local Area Connection** icon and select the **Properties** item.
3. Select the **Internet Protocol (TCP/IP)** item from the list provided and click the **Properties** button.
4. Set the computer to "Obtain a relay address automatically" as shown.

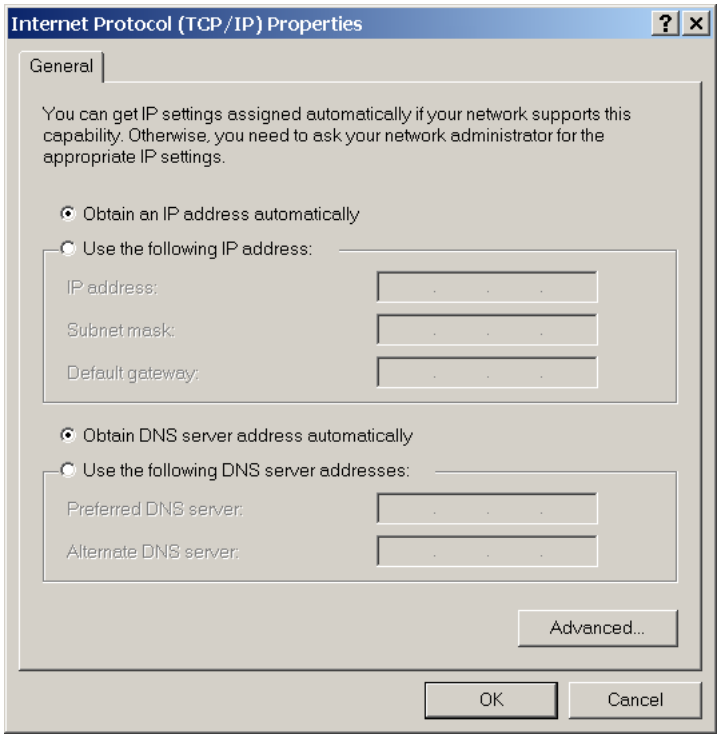

If the computer is used to connect to the Internet, re-enable any proxy server settings after the computer has been disconnected from the L90 relay.

3.7.2 Configure serial connection

Two options are possible: local connection between computer and front RS232 port, and remote connection using the rear RS485 terminals.

For the RS232 connection, a computer with an RS232 port and a serial cable are required.

To use the RS485 terminals at the back of the relay, a GE Grid Solutions F485 converter (or compatible RS232-to-RS485 converter) is required. See the F485 instruction manual for details.

1. Connect the computer to the F485 and the F485 to the RS485 terminal on the back of the UR device. Or connect the computer to the RS232 port on the front of the relay.
2. Start the EnerVista UR Setup software, or in EnerVista Launchpad select the UR device to start the software.
3. Click the **Device Setup** button. The window opens.
4. Click the **Add Site** button. A new category is added. Enter a site name in the **Site Name** field. Optionally add a short **Description** of the site. This example uses "Location 1" as the site name.
5. Click the **Add Device** button. A new device is added.
6. Enter a name in the **Device Name** field, up to 15 characters, and optionally add a **Description** of the site. The **Color** is for the text in the device list in the Online Window.
7. Select "Serial" from the **Interface** drop-down list. Interface parameters display that must be entered for serial communications. Try to load automatically the fields by clicking the **Read Order Code** button.

Figure 3-64: Configuring serial communication

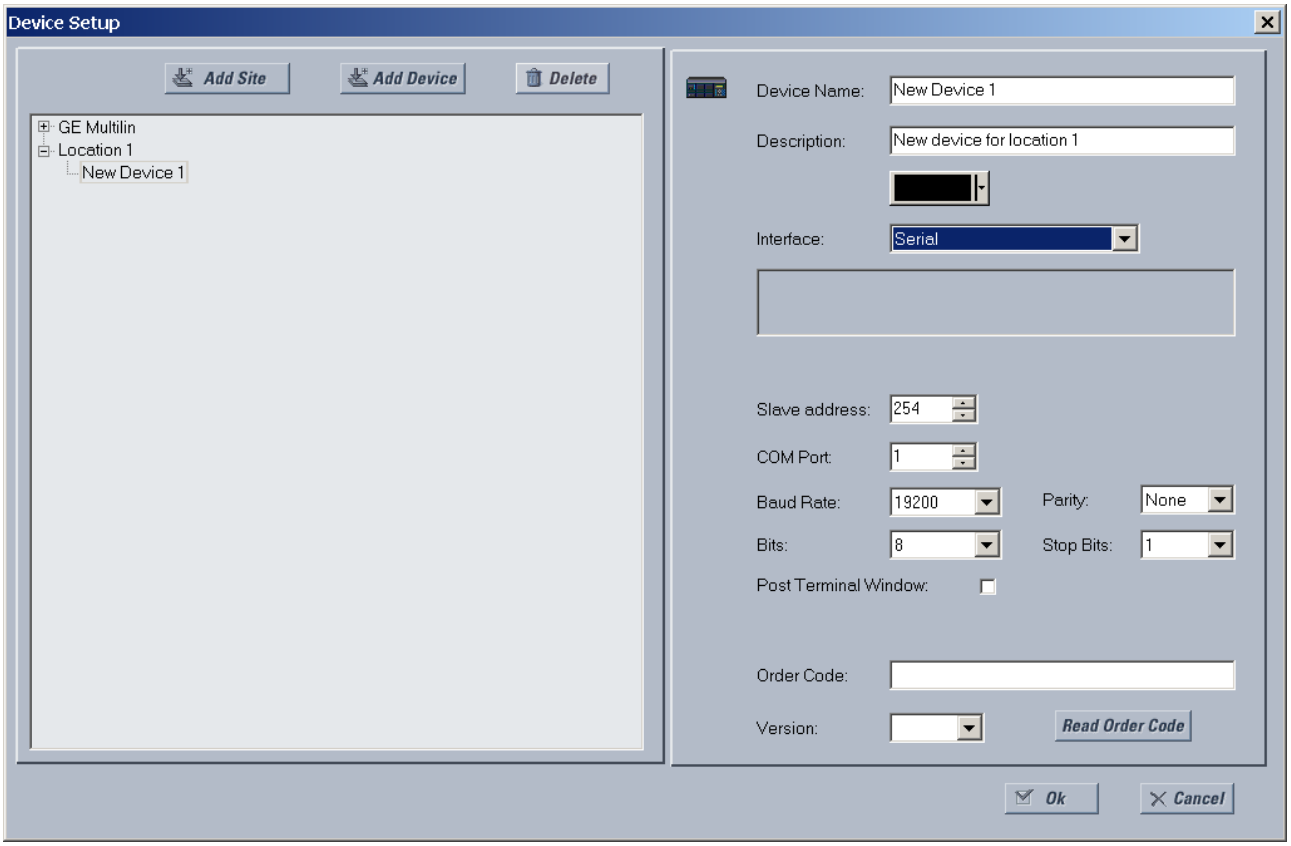

8. Enter the COM port used by the computer, the baud rate, and parity settings from the front panel **SETTINGS ⇨ PRODUCT**

SETUP ⇨⇩ COMMUNICATIONS ⇨ SERIAL PORTS menu, and the relay slave address setting from the front panel **SETTINGS ⇨ PRODUCT SETUP ⇨⇩ COMMUNICATIONS ⇨⇩ MODBUS PROTOCOL ⇨ MODBUS SLAVE ADDRESS** menu in their respective fields.

Baud Rate — Typically 19200 bits per second (bps) for RS232, and higher for RS485. Both modems need to use the same rate.

Parity — Set to None if unsure

Bits — Set to 8 if unsure

Stop Bits — Set to 1 if unsure

Post Terminal Window — Enable this option if you have a Schweitzer Engineering (SEL) SEL-203x Communications Processor, such as an SEL-2030 or SEL-2032. This option enables display of a terminal window to allow interaction with the other device.

9. Click the **Read Order Code** button to connect to the L90 and upload the order code to the software. If a communications error occurs, ensure that the EnerVista software serial communications values entered in the previous step correspond to the relay setting values, and also ensure that the same IP address is not assigned to multiple L90 ports.
10. Click the **OK** button when the relay order code has been received. The new site and device are added to the Online Window.

The device has been configured for serial communications. Proceed to the Connect to the L90 section to begin communication.

3.7.3 Configure Ethernet connection

You connect the Ethernet cable, define a site in the software, then add the relay as a device for the site. The computer and UR device must be on the same subnet.

1. Connect the Ethernet network cable to the Ethernet port on the back of the device.
2. Start the EnerVista UR Setup software, or in EnerVista Launchpad select the UR device to start the software.
3. Click the **Device Setup** button. The window opens.
4. Click the **Add Site** button. A new category is added. Enter a site name in the **Site Name** field. Optionally add a short **Description** of the site. This example uses “Location 1” as the site name.
5. Click the **Add Device** button. A new device is added.
6. Enter a name in the **Device Name** field, up to 15 characters, and optionally add a **Description** of the site. The **Color** is for the text in the device list in the Online Window.
7. Select “Ethernet” from the **Interface** drop-down list. This displays a number of interface parameters that must be entered for Ethernet functionality.

Figure 3-65: Configuring Ethernet communication

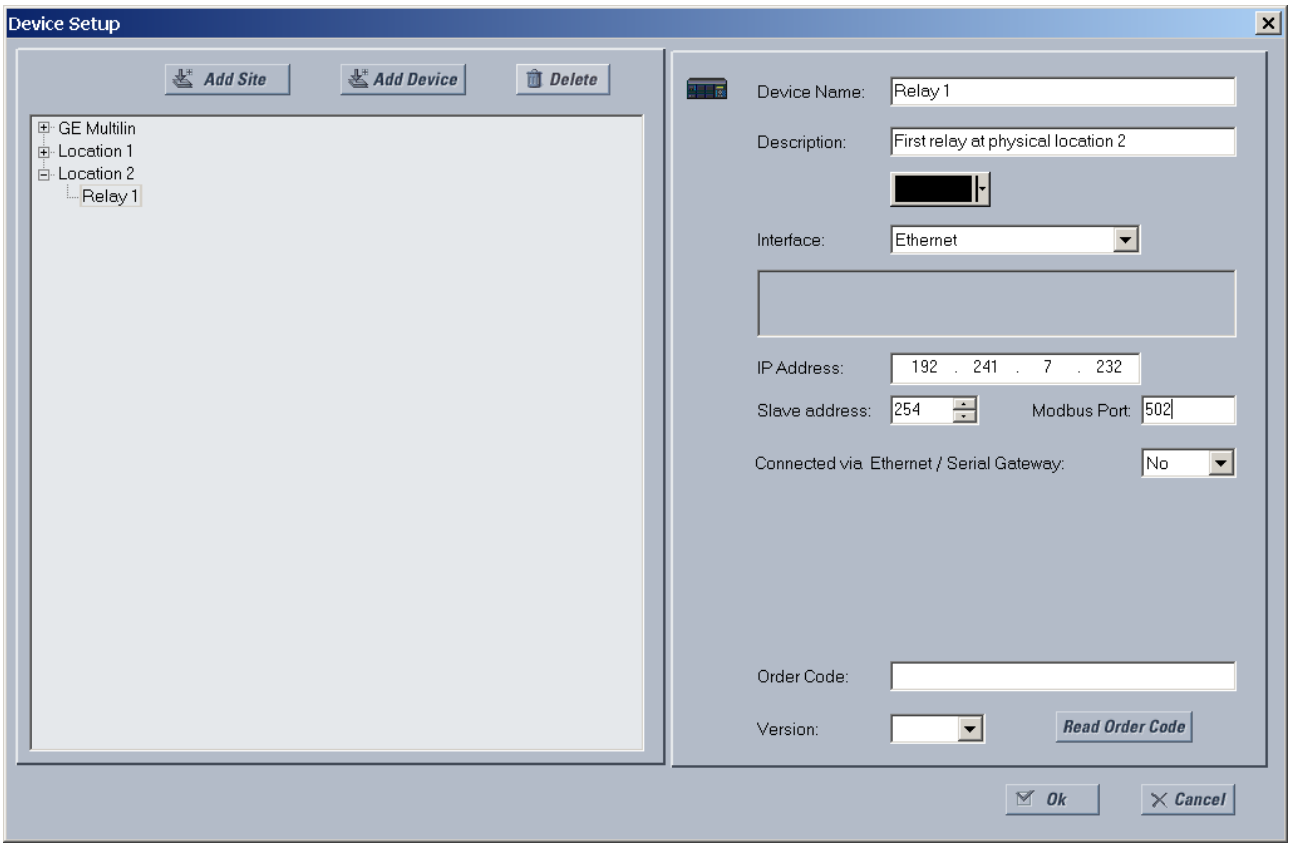

8. Enter the relay **IP Address**, which can be viewed on the device front panel under **SETTINGS** ⇨ **PRODUCT SETUP** ⇩⇨ **COMMUNICATIONS** ⇩⇨ **NETWORK** ⇨ **IP ADDRESS**. Once the IP address is entered, try to load automatically the fields by clicking the **Read Order Code** button.
9. Enter the relay **Slave address** and **Modbus Port** address values from the settings in the front panel **SETTINGS** ⇨ **PRODUCT SETUP** ⇩⇨ **COMMUNICATIONS** ⇩⇨**MODBUS PROTOCOL** menu.
10. If using a gateway to connect to the device, select **Yes** from the drop-down list.
11. Click the **Read Order Code** button to connect to the L90 device and upload the order code. If the device was entered already, a message displays "Device 'x' is also using IP address...." If a communications error occurs, ensure that the values entered in the previous steps correspond to the relay setting values, and also ensure that the same IP address is not assigned to multiple L90 ports.
12. Click the **OK** button when the relay order code has been received. The new site and device are added to the Online Window.

The device has been configured for Ethernet communications. Proceed to the Connect to the L90 section to begin communications.

3.7.4 Configure modem connection

A modem connection allows a computer to communicate with a UR device over phone lines.

Two modems are required. One modem is connected to the UR device, either by connecting the serial cable to the front panel port or through a RS485 box to the rear terminals of the UR device. The second modem is connected to the computer that initiates the connection.

To add a UR device for modem connections:

1. Connect the modems to the computer and UR.

2. Start the EnerVista UR Setup software, or in EnerVista Launchpad select the UR device to start the software.
3. Click the **Device Setup** button. The window opens.
4. Click the **Add Site** button. A new category is added. Enter a site name in the **Site Name** field, such as London East. Optionally add a short **Description** of the site, such as the address or intersection.
5. Click the **Add Device** button. A new device is added.
6. Enter a name in the **Device Name** field, up to 15 characters, and optionally add a **Description** of the site. The **Color** is for the text in the device list in the Online Window.
7. Select "Modem" from the **Interface** drop-down list. This displays a number of interface parameters that must be entered.
8. Select "Generic Modem" from the **Modem Name** drop-down list, then enter the **Phone Number** to dial to establish communication with the remote modem.

   Post Terminal Window — Enable this option if you have a SEL-203x Communications Processor, such as an SEL-2030 or SEL-2032. It enables display of a terminal window to allow interaction with the other device.
9. Once the phone number is entered, try to load automatically the device information by clicking the **Read Order Code** button.
10. Click the **OK** button when the relay order code has been received. The new device is added to the Online window.

The UR device has been added to the software.

3.7.5 Automatic discovery of UR devices

The EnerVista UR Setup software can find and communicate to all UR-family devices located on an Ethernet network.

Using the **Discover** button in the **Device Setup** window, a single click of the mouse triggers the software to detect any URs located on the network. This is done by searching a range of IP addresses based on the subnet mask of the computer. When a UR device is detected, the EnerVista UR Setup software proceeds to configure all settings and order code options in the window. This feature allows the user to identify and interrogate all UR devices at a location.

Examples of address ranges are as follows:

- If the host has an IP address of 3.94.247.10 and its subnet mask is 255.255.252.0, then the host's subnet is 3.94.244.0, and the possible IP addresses in this subnet are

  3.94.244.1 to 254

  3.94.245.1 to 254

  3.94.246.1 to 254

  3.94.247.1 to 254

  The discover function scans all those possible IP addresses to detect UR relays.
- If the host has an IP address of 3.94.247.145 and its subnet mask is 255.255.255.128, then the host's subnet is 3.94.247.128, and the discover function scans IP addresses of 3.94.247.128 to 3.94.248.254 for UR relays

To automatically add UR devices:

1. In the EnerVista software, click the **Device Setup** button. The window opens.
2. Click the **Discover** button. The software searches for UR devices on the computer subnet and adds any found to the Online Window area. If a required device is not found, add it manually as outlined earlier.

Figure 3-66: Discover button to detect UR devices in network

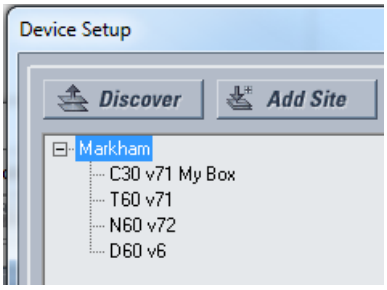

3.8 Connect to the L90

3

There are four ways to the connect to the device, as follows:

- RS232 or USB port (outlined here)
- RS485 port
- Ethernet port (outlined here)
- LAN

When unable to connect because of an "ACCESS VIOLATION," access **Device Setup** and refresh the order code for the device.

When unable to connect, ensure that the same IP address is not assigned to multiple L90 ports, for example under **Settings > Product Setup > Communications > Network**.

If still unable to connect, try unplugging and replugging the Ethernet connection. If that does not work, try to ping the device from the computer, and if unsuccessful, restart the computer.

NOTE

When multiple computers are connected to a L90 device, EnerVista settings windows are not updated automatically. They are refreshed when re-opened. If a user changes a setting on one computer, the other users need to refresh the display by closing and opening the settings window to see the change. To ensure that current settings are always viewed, close settings windows when not in use so that they are up-to-date when next accessed.

3.8.1 Connect to the L90 in EnerVista

For information on using the EnerVista software, see the Interfaces chapter.

To access the relay in EnerVista:

1. Open the **Settings > Product Setup > Display Properties** window as shown. The window opens with a status indicator on the lower left of the EnerVista UR Setup window.

3

Figure 3-67: EnerVista window

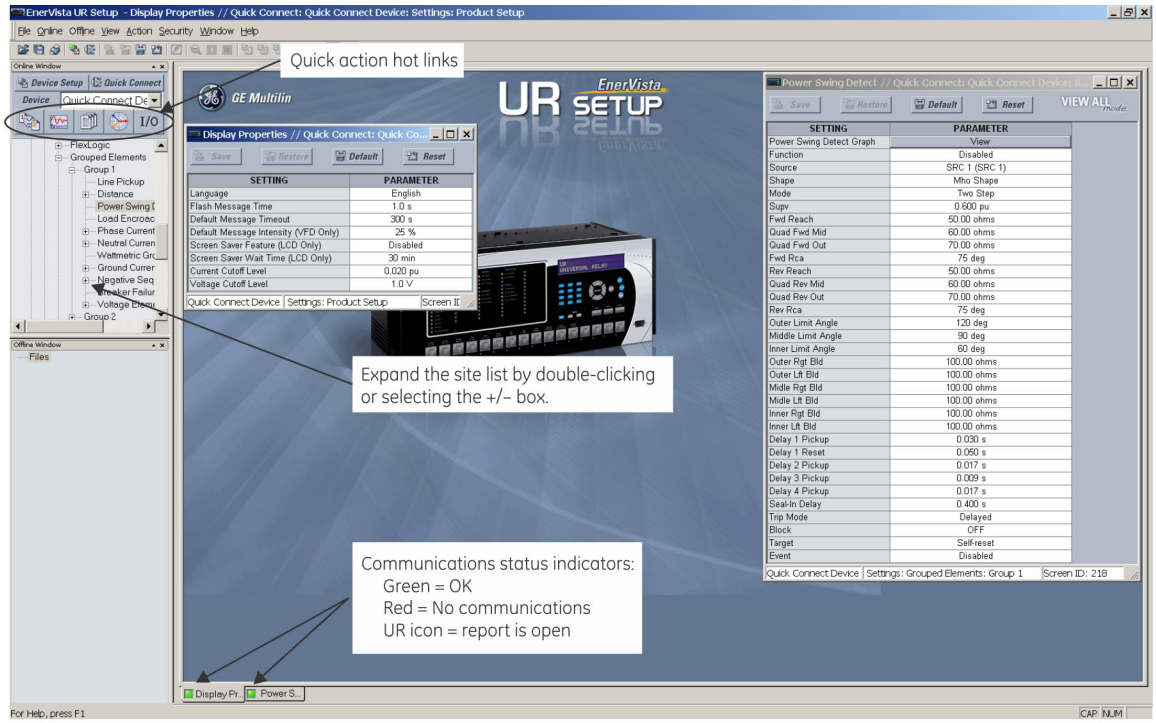

842743A3.CDR

2. If the status indicator is red, verify that the Ethernet network cable is properly connected to the Ethernet port on the back of the relay and that the relay has been properly set up for communication.
3. If a relay icon appears in place of the status indicator, then a report (such as an oscillography or event record) is open. Close the report to re-display the green status indicator.
4. The Display Properties settings can now be viewed, edited, or printed.

3.8.1.1 Quick action hot links

The EnerVista UR Setup software has several quick action buttons to provide instant access to several functions that are performed often when using URs. From the online window, users can select the relay to interrogate from a pull-down window, then click the button for the action to perform. The following quick action functions are available:

- View the event record
- View the last recorded oscillography record
- View the L90 protection summary
- View all of the L90 metering values
- View the status of all L90 inputs and outputs
- Generate a service report

3.8.2 Use Quick Connect via front RS232 port

This feature applies to the enhanced and basic front panels.

To connect to the UR from a computer using a serial cable:

1. Connect an RS232 serial cable to the computer and the front panel RS232 port.
2. Start the EnerVista UR Setup software, or in EnerVista Launchpad select the UR device to start the software.
3. Click the **Quick Connect** button. The window opens.

Figure 3-68: Quick Connect window to access a device

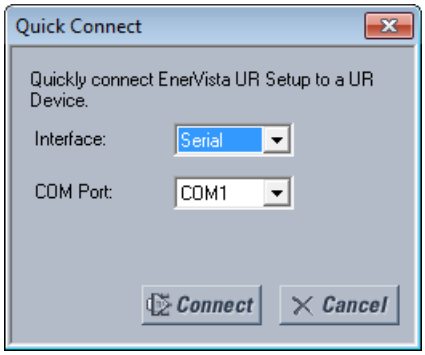

4. Select the serial **Interface** and the communications port (**COM Port**) from the drop-down lists, then click **Connect**. The COM Port is that of the computer.
5. The EnerVista software creates a site named "Quick Connect" with a corresponding device also named "Quick Connect" and displays them in the Online Window. Expand the sections to view data directly from the UR device. Use the **Device Setup** button to change the site name.

Each time that the EnerVista UR Setup software is initialized, click the **Quick Connect** button to establish direct communications to the L90. This ensures that configuration of the EnerVista UR Setup software matches the L90 model number.

3.8.3 Use Quick Connect via front USB port

This feature applies to the graphical front panel.

To connect to the UR from a computer using a USB cable:

1. Connect the cable to the computer and the front panel USB port (square connector).
2. Start the EnerVista UR Setup software, or in EnerVista Launchpad select the UR device to start the software.
3. Click the **Quick Connect** button to open the window.
4. Select the USB **Interface** and the "GE Virtual Serial Port" driver from the drop-down list, then click **Connect**. If the GE driver does not display, it means that the USB cable was connected on Windows 10 when upgrading the UR software. You need to re-install the EnerVista software with the USB cable disconnected.
5. The EnerVista software creates a site named "Quick Connect" with a corresponding device also named "Quick Connect" and displays them in the Online Window. Expand the sections to view data directly from the UR device. Use the **Device Setup** button to change the site name.

Each time that the EnerVista UR Setup software is initialized, click the **Quick Connect** button to establish direct communications to the L90. This ensures that configuration of the EnerVista UR Setup software matches the L90 model number.

3.8.4 Use Quick Connect via a rear Ethernet port

To connect to a UR using an Ethernet cable:

1. In the EnerVista software, click the **Quick Connect** button. The window opens.

Figure 3-69: Quick Connect window for Ethernet connection

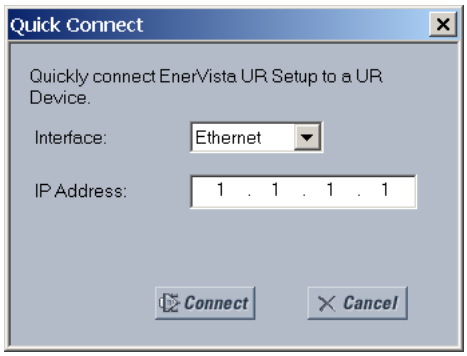

2. Select the **Ethernet** interface and enter the IP address assigned to the L90, then click the **Connect** button. The EnerVista UR Setup software creates a site named “Quick Connect” with a corresponding device also named "Quick Connect" and displays them in the Online Window.
3. Expand the sections to view data directly from the L90 device. Use the **Device Setup** button to change the site name.

Each time that the EnerVista software is initialized, click the **Quick Connect** button to establish direct communications to the L90. This ensures that configuration of the EnerVista UR Setup software matches the L90 model number.

3.9 Set up CyberSentry and change default password

If and when first using CyberSentry security, use the following procedure for set up.

1. Log in to the relay as Administrator by using the **VALUE** keys on the front panel or through EnerVista connected serially (so that no IP address is required). If logging in through EnerVista choose Device authentication (see figure). Enter the default password "ChangeMe1#". Note that the "Lock relay" setting needs to be disabled in the **Security > Supervisory** menu. When this setting is disabled, configuration and firmware upgrade are possible. By default, this setting is disabled.
2. Enable the Supervisor role if you have a need for it.
3. Make any required changes in configuration, such as setting a valid IP address for communication over Ethernet.
4. Log out of the Administrator account by choosing None.

Next, device or server authentication can be chosen on the login screen, but the choice is available only in EnerVista. Use Device authentication to log in using the five pre-configured roles (Administrator, Supervisor, Engineer, Operator, Observer, or Administrator and Supervisor when Device authentication is disabled). When using a serial connection, only Device authentication is supported. When Server authentication is required, characteristics for communication with a RADIUS server must be configured on the UR. This is possible only through the EnerVista software. The RADIUS server itself also must be configured. At the end of this instruction manual, the appendix called RADIUS Server Configuration gives an example of how to set up a simple RADIUS server. Once both the RADIUS server and the parameters for connecting the UR to the server have been configured, you can choose Server authentication on the login screen of EnerVista.

Figure 3-70: Login screen for CyberSentry

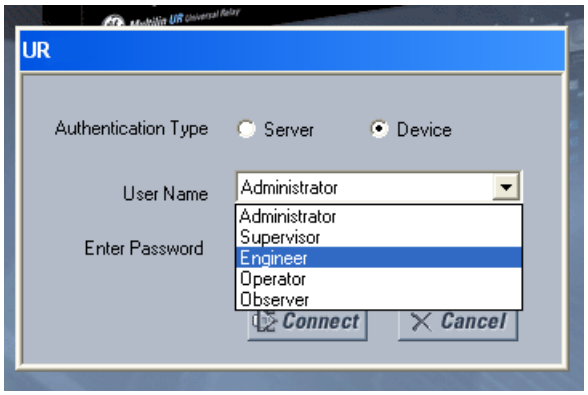

During the commissioning phase, you have the option to bypass the use of passwords. Do so by enabling the **Bypass Access** setting under **Settings > Product Setup > Security > Supervisory**. Be sure to disable this bypass setting after commissioning the device.

You can change the password for any role either from the front panel or through EnerVista. If using EnerVista, navigate to **Settings > Product Setup > Security**. Change the **Local Administrator Password**, for example. It is strongly recommended that the password for the Administrator be changed from the default. Changing the passwords for the other three roles is optional.

3.10 Import settings

The following file types can be imported:

- URS — UR settings file (firmware version7.3x or earlier)
- IID — Instantiated IED capability description file — Actual settings on UR
- CID — Configured IED description file — Settings sent to the UR (may or may not be actual settings). When using IEC 61850, network settings can also be configured by accepting a CID file that includes them, as long as the IP address of at least one port is manually configured in the relay before the CID file is sent and the IP address matches that in the file.

The import is done in the Offline Window area.

To import a settings file:

1. In the Offline Window area, right-click the device and select the **Add Device from File** option. The device is that from which you want to import settings.
2. If required, change the **Files of type** drop-down list.
3. Select the file to import.

To apply the settings to a live device:

1. Drag-and-drop the device entry from the Offline Window area to its entry in the Online Window area.

   Individual settings also can be dragged and dropped between Online and Offline Window areas.

   The order codes must match.

This is what happens:

- CID — For version 7.30 or later, a new URS file generates and moves into a new device folder, generating SCL files from the new URS file. Files in the folder have new time stamps. The CID file retains its time stamp.
- URS — When not IEC 61850 and version is lower than 7.30, the file is added and time stamp is unchanged. When clicking in the software on the tree element, a device folder is created, the original file moves into it, and time stamp is on the URS file is retained.

When EIC 61850 and version is 7.30 or later, the file is added and time stamp is unchanged. When clicking in the software on the tree element, a device folder is created, the original file moves into it, SCL files are generated there, and the "Last modified" time stamp on the URS file changes.

3.11 Connect to D400 gateway

A GE Multilin D400 Substation Gateway can be used to collect data from UR devices in a local area network (LAN). It collects metering, status, event, and fault report data from serial or LAN-based intelligent substation devices, and it pre-processes the data. The D400 supports up to 16 serial and eight network connections, with multiple devices possible on each serial connection. Up to 10 concurrent file transfer sessions are possible, meaning data for up to 10 URs can be transferred at the same time and any additional IEDs are queued on a first-come-first-served basis. The D400 can then upload files to a demilitarized zone (DMZ) server at the enterprise level.

Setup is as follows. For UR devices with the CyberSentry software option, when there is a need to retrieve periodically the logs from the UR securely without a human interface, the following approach can be used. See the D400 manual for configuration details to achieve it.

A UR in the substation can authenticate a user either connecting to a RADIUS server or on the device itself. This depends on the user name used for authentication on a connection. The D400 connects to the UR device using an Ethernet, USB, or serial port on the UR. At the other end, the cable attaches to the rear of D400. Use the D400 software to configure a serial or network communication/connection for the UR, then to configure the IED device blocks/clients for the UR, and then to configure record retrieval. Once configured, the UR and D400 use a keyfile authentication mechanism to establish communication.

For UR devices with the IEC 61850 software option, also use the D400 IEC 61850 Loader software.

When a D400 detects new files available for download from a UR, it connects to the UR and reads the files via sFTP protocol. The following files can be transferred:

- Oscillography files
- Event records
- Log files
- Configuration (setting) files

The D400 information is viewable in its software and in a web browser.

3.11.1 Oscillography files

These are stored in COMTRADE format in the D400 folder system using the UR site and device name.

3.11.2 Event records

These are stored as the EVT.TXT file in the D400 folder system using the UR site and device name.

3.11.3 Log files

Log files can be retrieved for UR 7.0 and later. The following file types are possible, stored in the D400 folder system using the UR site and device name:

- factory_event.txt — Information about change methods and origins. Saved with a "_YYMMDDhhmmss" retrieval time stamp, for example FACTORY_EVENT_170525183124.TXT.
- setting_changes.log — Information on what settings have been changed. Saved with a "_YYMMDDhhmmss" retrieval time stamp, for example SETTING_CHANGES_170525183124.TXT.

3.11.4 Setting files

These are the configuration/settings files in the IEC 61850 SCL/IID format. The ur.iid file is saved with a "_YYMMDDhhmmss" retrieval time stamp, for example ur_170525183124.iid. It is stored in the D400 folder system using the UR site and device name.

L90 Line Current Differential System

Chapter 4: Interfaces

This chapter explains the EnerVista software interface, the front panel interface, logic diagrams, and Engineer interface for logic design and monitoring.

4.1 EnerVista software interface

4.1.1 Introduction

The EnerVista UR Setup software provides a single facility to configure, monitor, maintain, and troubleshoot relays connected over local or wide-area networks. It can be used while disconnected (offline) or connected (online) to a UR device. In offline mode, settings files can be created for eventual downloading to the device. In online mode, communication with the device is real-time.

The EnerVista UR Setup software is provided with every L90. This chapter outlines the EnerVista software interface. The EnerVista UR Setup help file in the software also provides details for getting started and using the software interface.

4.1.2 Settings files

The EnerVista software supports the following three ways of handling changes to relay settings:

- In offline mode (relay disconnected) to create or edit relay settings files for later transfer to relays
- While connected to a relay to modify relay settings, and then save the settings to the relay
- Create/edit settings files and then write them to the relay while connected to the relay

See the back up section in the Maintenance chapter for instructions on how to create a settings file either offline or online.

Settings files are organized on the basis of file names assigned by the user. A settings file contains data pertaining to the following types of relay settings:

- Device definition
- Product setup
- System setup
- FlexLogic
- Grouped elements
- Control elements
- Inputs/outputs

- Remote resources
- Testing

Factory default values are supplied and can be restored after any changes.

The following communications settings are not transferred to the L90 with settings files:

Modbus Slave Address
Modbus TCP Port Number
RS485 COM2 Baud Rate
RS485 COM2 Parity
COM2 Minimum Response Time
COM2 Selection
RRTD Slave Address
RRTD Baud Rate
IP Address (see end of previous chapter for information)
IP Subnet Mask
IP Routing

When a settings file is loaded to a L90 that is in-service, the following sequence occurs:

1. The L90 takes itself out of service.
2. The L90 issues a UNIT NOT PROGRAMMED major self-test error.
3. The L90 closes the critical fail contact.

The Maintenance chapter outlines how to use a settings file in the .urs format for backup and restore.

4.1.3 Event viewing

In online or offline mode, you can view and analyze data generated by triggered parameters as follows:

- **Event recorder** — The event recorder captures contextual data associated with the last 1024 events, listed chronologically from most recent to oldest
- **Oscillography** — The oscillography waveform traces and digital states are used to provide a visual display of power system and relay operation data captured during specific triggered events

Event records are viewable at software and device-specific levels. Access the former under **Admin > Event Log > View**. Access the latter under **Actual Values > Records > Event Record**.

Event record entries for CyberSentry are explained in the next chapter. The following table outlines some software-level entries.

Table 4-1: Event record descriptions

Event	Description
EnerVista UR Setup SESSION STARTED	The EnerVista software was launched
Language was changed.	The user changed the software language using the **View > Language** menu item
DEFAULT USERS CREATED	The user management window was launched using the **Admin > User Management** menu item
: Successful upload of firmware END Firmware verified Firmware uploaded Firmware erased START: Upload new firmware	The firmware on a device was upgraded
EnerVista UR Setup EVENT LOG CLEARED	The event record was cleared. All event records were deleted using the **Admin > Event Log > Clear** menu item.

4.1.4 File support

The following support applies, where the Settings List is at the bottom left and the Site List is at the top left of the EnerVista window:

- **Execution** — Any EnerVista UR Setup file that is opened launches the application or provides focus to the already opened application. If the file was a settings file (has a .urs extension) that had been removed from the Settings List navigation menu, it is added back to the menu.
- **Drag and Drop** — The device settings and individual settings can be dragged and dropped between the Online and Offline Window areas. Also, any Windows Explorer directory folder is a file drag source and drop target.

  New files that are dropped into the Offline Window are added to the tree, which is automatically sorted alphabetically with respect to settings file names. In the Online Window, files or individual menu items that are dropped in the selected device menu are sent automatically to the online device.

4.1.5 EnerVista main window

The EnerVista UR Setup software window has the following components:

1. Title bar that shows the pathname of the active data view or the name of the software
2. Main window menu bar
3. Main window toolbar
4. Site list / online window area
5. Settings list / offline window area
6. Software windows, with common toolbar
7. Settings file data view windows, with common toolbar
8. Workspace area with data view tabs
9. Status bar
10. Quick action hot links

Figure 4-1: EnerVista UR Setup software window

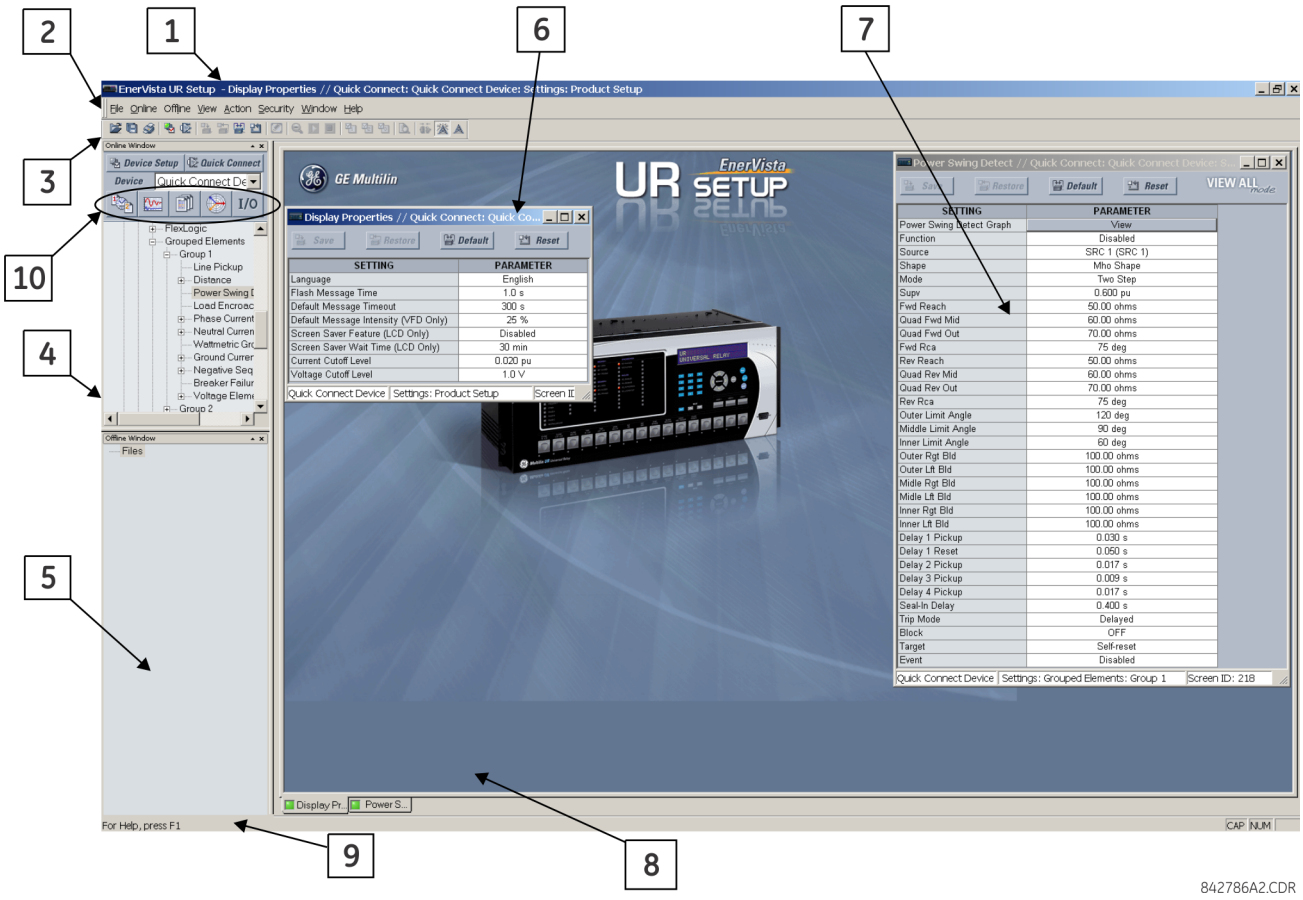

4.1.6 Protection summary window

The Protection Summary is a graphical user interface to manage elements, such as enabling and disabling them. Access it under **Settings > Protection Summary**. See the Settings chapter for information on use.

Figure 4-2: Protection Summary interface (B30 example shown)

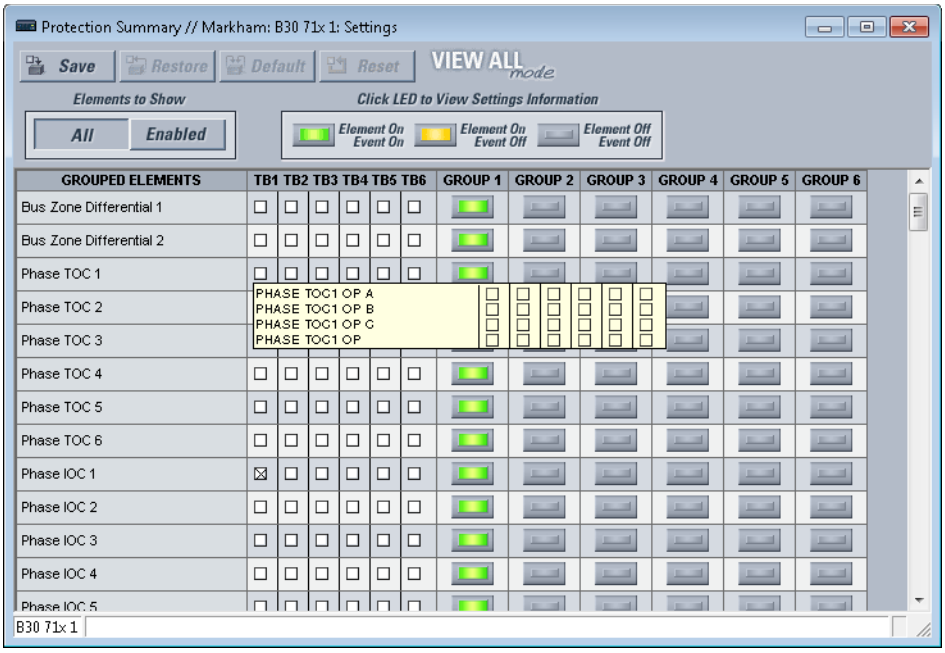

4.1.7 Settings templates

Settings file templates simplify the configuration and commissioning of multiple relays that protect similar assets. An example is a substation that has 10 similar feeders protected by 10 UR F60 relays.

In these situations, typically 90% or greater of the settings are identical among devices. The templates allow engineers to configure and test these common settings, then lock them so that they are not available to users. For example, locked settings can be hidden from view for field engineers, allowing them to quickly identify and concentrate on specific settings.

The remaining settings (typically 10% or less) can be specified as editable and made available to field engineers installing the devices. These are settings such as protection element pickup values and CT and VT ratios.

The settings template mode allows the user to define which settings are visible in the software. Settings templates can be applied to both settings files (settings file templates) and online devices (online settings templates). The functionality is identical for both purposes.

NOTE

Template mode is available in the English software only.

Settings file conversion from previous firmware versions is supported.

4.1.7.1 Enable the settings template

The settings file template feature is disabled by default. It can be enabled in offline or online mode.

The procedure outlines how to enable in offline mode the settings template for UR settings files.

1. Locate the settings file in the Offline Window area of the EnerVista UR Setup software. If not there, a file can be added from an online device by right-clicking it and selecting the **Add Device to Offline Window** option.
2. In the Offline Window area, right-click the selected device or settings file and select the **Template Mode > Create Template** option.

   The settings file template is now enabled and the file menus display in light blue. The settings file is now in template editing mode. To undo the action, select **Template Mode > Remove Template**.

Alternatively, the settings template can be applied to online settings, as follows.

1. Locate the device in the Online Window area of the EnerVista UR Setup software.
2. Right-click the device and select the **Template Mode > Create Template** option. The software prompts for a template password. This password is required to use the template feature and must be at least four characters in length.

Figure 4-3: Entering a settings file password

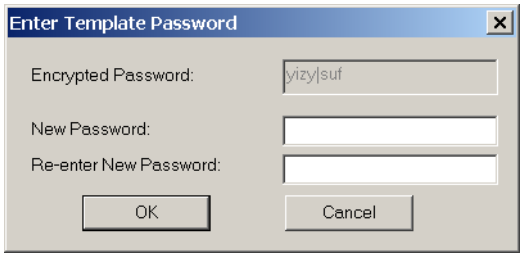

3. Enter and re-enter the new password, then click **OK** to continue.

   The online settings template is now enabled. The device is now in template editing mode.

4

4.1.7.2 Edit the settings template

The settings template editing feature allows the user to specify which settings are available for viewing and modification in EnerVista UR Setup. By default, all settings except the FlexLogic equation editor settings are locked.

1. With the template already enabled, locate the device or settings file in the Online or Offline Window area in the software.
2. Right-click the device or file and select the **Template Mode > Edit Template** option to verify or place the device in template editing mode (check mark beside option). If prompted, enter the template password then click **OK**.
3. Open the relevant settings window that contains settings to be specified as viewable.

   By default, all settings are specified as locked and displayed against a grey background. The icon on the upper right of the settings window indicates that the EnerVista software is in **EDIT mode**. The following example shows the phase time overcurrent settings window in edit mode.

Figure 4-4: Settings template with all settings specified as locked

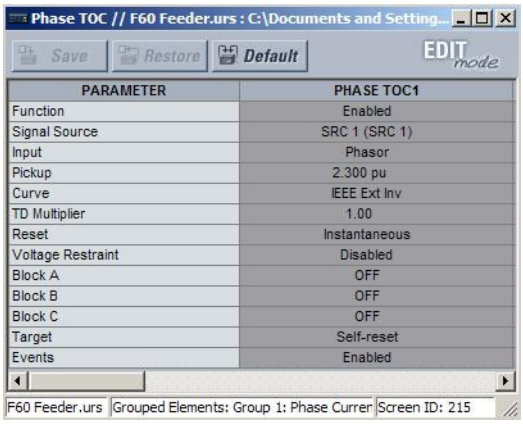

PARAMETER	PHASE TOC1
Function	Enabled
Signal Source	SRC 1 (SRC 1)
Input	Phasor
Pickup	2.300 pu
Curve	IEEE Ext Inv
TD Multiplier	1.00
Reset	Instantaneous
Voltage Restraint	Disabled
Block A	OFF
Block B	OFF
Block C	OFF
Target	Self-reset
Events	Enabled

4. Specify the settings to make viewable by clicking them.

   A setting available to view displays with a yellow background.

Figure 4-5: Settings template with two settings specified as editable

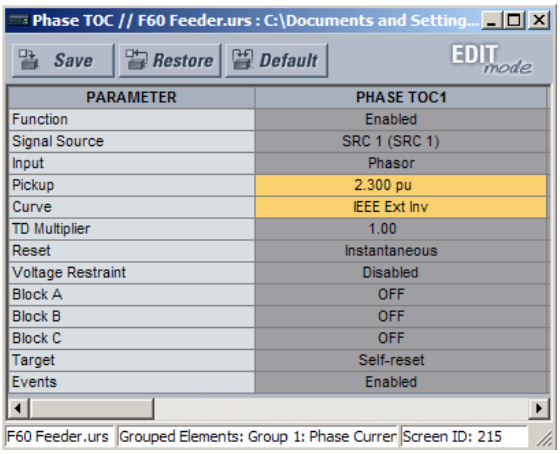

5. Click the **Save** button to save changes to the settings template.
6. Continue through any other settings window to specify all viewable settings.

   The next time that the device/settings are accessed, only those specified as viewable/editable display in the menu hierarchy.

4

4.1.7.3 Add password protection to a template

GE recommends that templates be saved with password protection to maximize security.

NOTE

When templates are created for online settings, the password is added during the initial template creation step. It does not need to be added after the template is created.

To add password protection to a settings file template:

1. In the Offline Window area, right-click the device and select the **Template Mode > Password Protect Template** option.

   The software prompts for a template password. This password must be at least four characters in length.

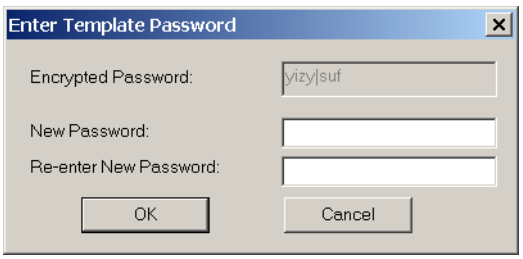

2. Enter and re-enter the new password, then click **OK** to continue.

The settings file template is now secured with password protection.

4.1.7.4 View the settings template

Once all necessary settings are specified for viewing, users are able to view the settings template on the online device or settings file. There are two ways to specify the settings view with the settings template feature:

- Display only those settings available for editing
- Display all settings, with settings not available for editing greyed-out

To display only the settings available for editing:

1. Right-click the device in the Online or Offline Window area and apply the template by selecting the **Template Mode >**

View In Template Mode option.

2. Enter the template password if prompted, then click **OK** to apply the template.

Once the template has been applied, users are limited to view and edit the settings specified by the template. The effect of applying the template to the phase time overcurrent settings is shown.

Figure 4-6: Applying templates using the View in Template Mode command

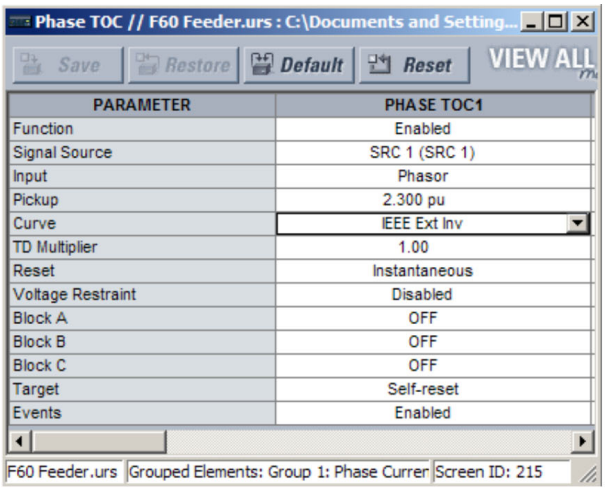

Phase time overcurrent settings window without template applied.

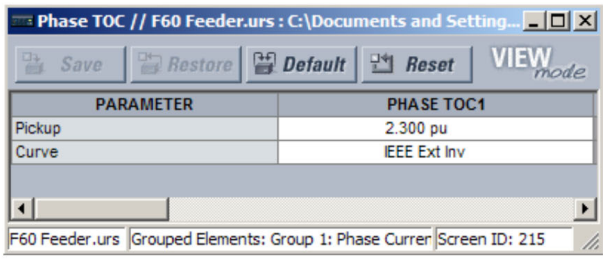

Phase time overcurrent window with template applied via the **Template Mode > View In Template Mode** command. The template specifies that only the Pickup and Curve settings be available.

842858A1.CDR

Viewing the settings in template mode also modifies the settings menu, showing only the settings categories that contain editable settings. The effect of applying the template to a typical settings menu is shown as follows.

Figure 4-7: Applying templates using the View in Template Mode settings command

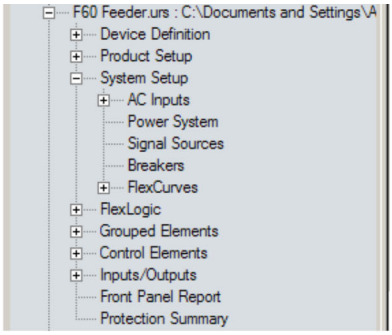

Typical settings tree view without template applied.

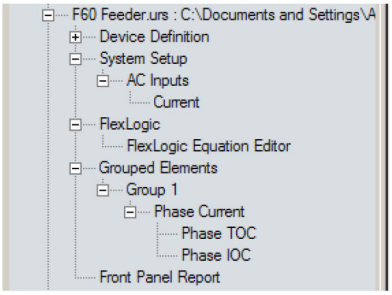

Typical settings tree view with template applied via the **Template Mode > View In Template Mode** command.

842860A1.CDR

Use the following procedure to display settings available for editing and settings locked by the template.

1. Right-click the device in the Online or Offline Window area and apply the template by selecting the **Template Mode > View All Settings** option.
2. Enter the template password then click **OK** to apply the template.

Once the template has been applied, users are limited to edit the settings specified by the template, but all settings are shown. The effect of applying the template to the phase time overcurrent settings is shown as follows.

Figure 4-8: Applying templates using the View All Settings command

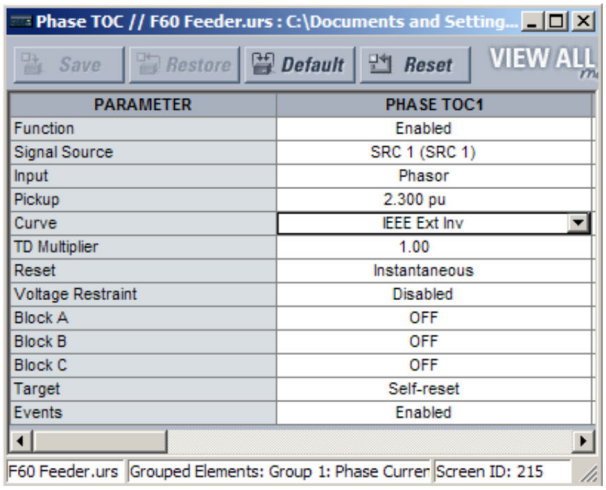

Phase time overcurrent settings window without template applied.

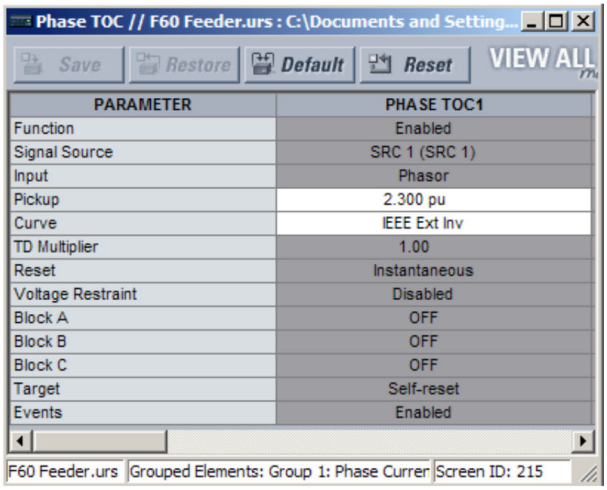

Phase time overcurrent window with template applied via the **Template Mode > View All Settings** command. The template specifies that only the Pickup and Curve settings be available.

842859A1.CDR

4

4.1.7.5 Remove the settings template

Once a settings template is removed, it cannot be reapplied and a new settings template needs to be defined before use.

1. Right-click the device in the Online or Offline Window area and select the **Template Mode > Remove Template** option.
2. Enter the template password if prompted and click **OK** to continue.
3. Confirm that you want to remove the template by clicking **Yes**.

The EnerVista software removes all template information and all settings are available.

4.1.8 Secure and lock FlexLogic equations

The UR allows users to secure some or all FlexLogic equations, preventing unauthorized viewing or modification of critical FlexLogic applications. This is accomplished using the settings template feature to lock individual entries within FlexLogic equations.

Secured FlexLogic equations remain secure when files are sent to and retrieved from any UR-series device.

Locking can be tied to the serial number too.

4.1.8.1 Lock FlexLogic equations

To lock individual entries of a FlexLogic equation:

1. Right-click the settings file or online device and select the **Template Mode > Create Template** item to enable the settings template feature.
2. If prompted, enter the template password.
3. Select the **FlexLogic > FlexLogic Equation Editor** settings menu item.

   By default, all FlexLogic entries are specified as viewable and display against a yellow background. The icon on the upper right of the window also indicates that EnerVista UR Setup is in **EDIT mode**.
4. Specify the entries to lock by clicking them.

   The locked entries display a grey background as shown in the example.

Figure 4-9: Locking FlexLogic equation entries in Edit Mode

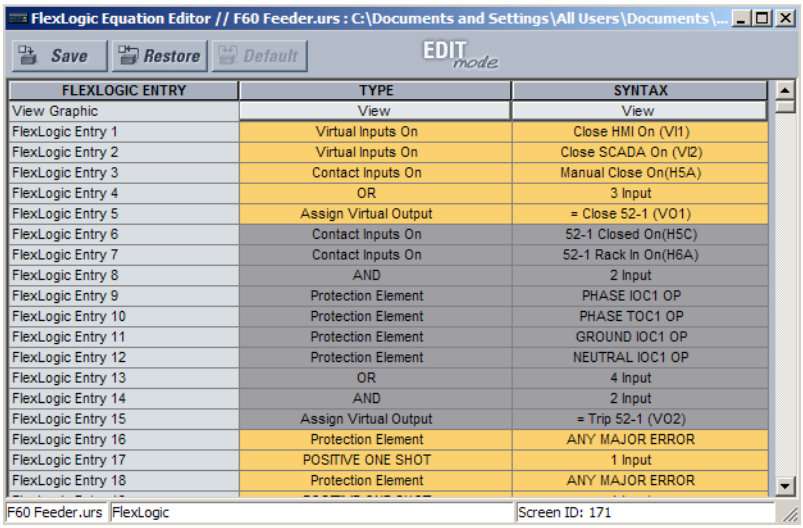

FLEXLOGIC ENTRY	TYPE	SYNTAX
View Graphic	View	View
FlexLogic Entry 1	Virtual Inputs On	Close HMI On (VI1)
FlexLogic Entry 2	Virtual Inputs On	Close SCADA On (VI2)
FlexLogic Entry 3	Contact Inputs On	Manual Close On(H5A)
FlexLogic Entry 4	OR	3 Input
FlexLogic Entry 5	Assign Virtual Output	= Close 52-1 (VO1)
FlexLogic Entry 6	Contact Inputs On	52-1 Closed On(H5C)
FlexLogic Entry 7	Contact Inputs On	52-1 Rack In On(H6A)
FlexLogic Entry 8	AND	2 Input
FlexLogic Entry 9	Protection Element	PHASE IOC1 OP
FlexLogic Entry 10	Protection Element	PHASE TOC1 OP
FlexLogic Entry 11	Protection Element	GROUND IOC1 OP
FlexLogic Entry 12	Protection Element	NEUTRAL IOC1 OP
FlexLogic Entry 13	OR	4 Input
FlexLogic Entry 14	AND	2 Input
FlexLogic Entry 15	Assign Virtual Output	= Trip 52-1 (VO2)
FlexLogic Entry 16	Protection Element	ANY MAJOR ERROR
FlexLogic Entry 17	POSITIVE ONE SHOT	1 Input
FlexLogic Entry 18	Protection Element	ANY MAJOR ERROR

4

5. Click the **Save** button to save and apply changes to the settings template.
6. Select the **Template Mode > View In Template Mode** option to view the template.
7. Optionally apply a password to the template by right-clicking the device and selecting the **Template Mode > Password Protect Template** option.

Once the template has been applied, users are limited to view and edit the FlexLogic entries not locked by the template. The effect of applying the template to the FlexLogic entries is shown here.

Figure 4-10: Locking FlexLogic entries through settings templates

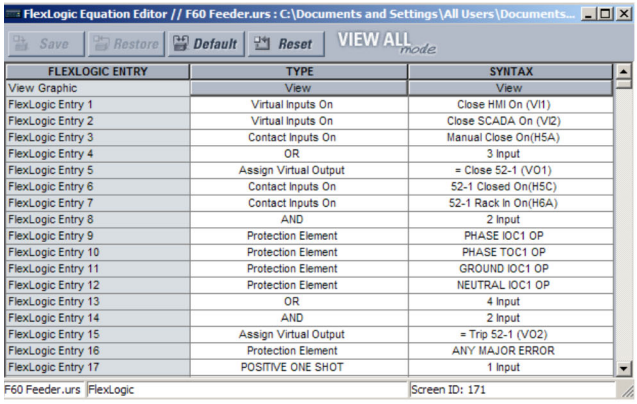

FLEXLOGIC ENTRY	TYPE	SYNTAX
View Graphic	View	View
FlexLogic Entry 1	Virtual Inputs On	Close HMI On (VI1)
FlexLogic Entry 2	Virtual Inputs On	Close SCADA On (VI2)
FlexLogic Entry 3	Contact Inputs On	Manual Close On(H5A)
FlexLogic Entry 4	OR	3 Input
FlexLogic Entry 5	Assign Virtual Output	= Close 52-1 (VO1)
FlexLogic Entry 6	Contact Inputs On	52-1 Closed On(H5C)
FlexLogic Entry 7	Contact Inputs On	52-1 Rack In On(H6A)
FlexLogic Entry 8	AND	2 Input
FlexLogic Entry 9	Protection Element	PHASE IOC1 OP
FlexLogic Entry 10	Protection Element	PHASE TOC1 OP
FlexLogic Entry 11	Protection Element	GROUND IOC1 OP
FlexLogic Entry 12	Protection Element	NEUTRAL IOC1 OP
FlexLogic Entry 13	OR	4 Input
FlexLogic Entry 14	AND	2 Input
FlexLogic Entry 15	Assign Virtual Output	= Trip 52-1 (VO2)
FlexLogic Entry 16	Protection Element	ANY MAJOR ERROR
FlexLogic Entry 17	POSITIVE ONE SHOT	1 Input

Typical FlexLogic™ entries without template applied.

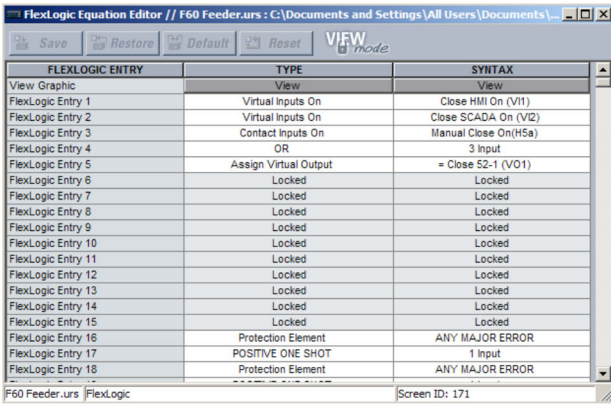

FLEXLOGIC ENTRY	TYPE	SYNTAX
View Graphic	View	View
FlexLogic Entry 1	Virtual Inputs On	Close HMI On (VI1)
FlexLogic Entry 2	Virtual Inputs On	Close SCADA On (VI2)
FlexLogic Entry 3	Contact Inputs On	Manual Close On(H5a)
FlexLogic Entry 4	OR	3 Input
FlexLogic Entry 5	Assign Virtual Output	= Close 52-1 (VO1)
FlexLogic Entry 6	Locked	Locked
FlexLogic Entry 7	Locked	Locked
FlexLogic Entry 8	Locked	Locked
FlexLogic Entry 9	Locked	Locked
FlexLogic Entry 10	Locked	Locked
FlexLogic Entry 11	Locked	Locked
FlexLogic Entry 12	Locked	Locked
FlexLogic Entry 13	Locked	Locked
FlexLogic Entry 14	Locked	Locked
FlexLogic Entry 15	Locked	Locked
FlexLogic Entry 16	Protection Element	ANY MAJOR ERROR
FlexLogic Entry 17	POSITIVE ONE SHOT	1 Input
FlexLogic Entry 18	Protection Element	ANY MAJOR ERROR

Typical FlexLogic™ entries locked with template via the **Template Mode > View In Template Mode** command.

842861A1.CDF

The FlexLogic entries are also shown as locked in the graphical view and on the front panel display.

Figure 4-11: Secured FlexLogic in graphical view

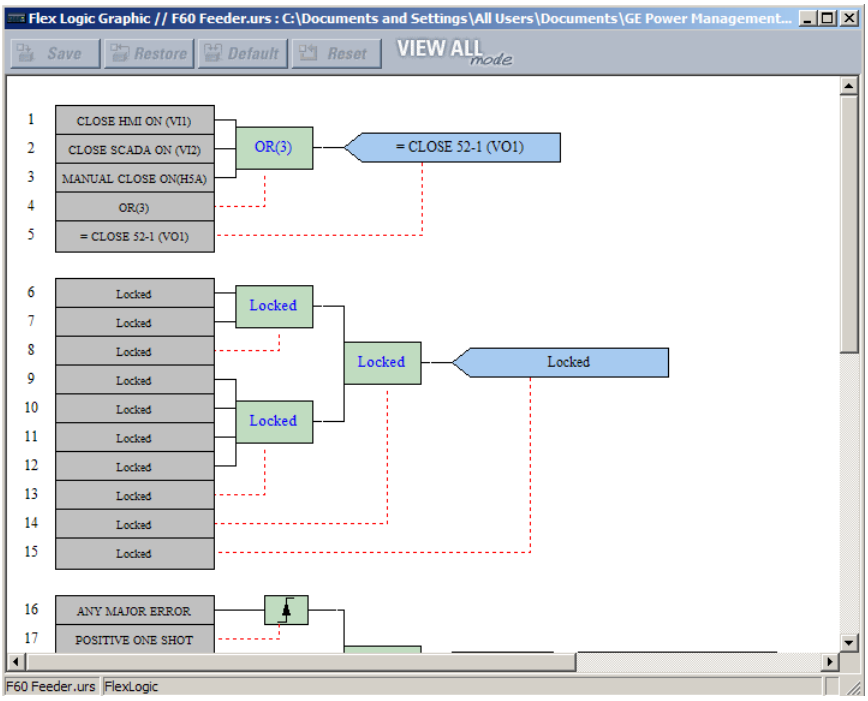

4.1.8.2 Lock FlexLogic equations to the serial number

A settings file and associated FlexLogic equations also can be locked to a UR serial number. Once FlexLogic entries in a settings file have been secured, use the following procedure to lock the settings file to a serial number. A serial number is viewable under **Actual Values > Product Info > Model Information**, the inside front panel, and the rear of the device.

1. Right-click the setting file in the Offline Window area and select the **Edit Device Properties** item. The window opens.

Figure 4-12: Settings file properties window

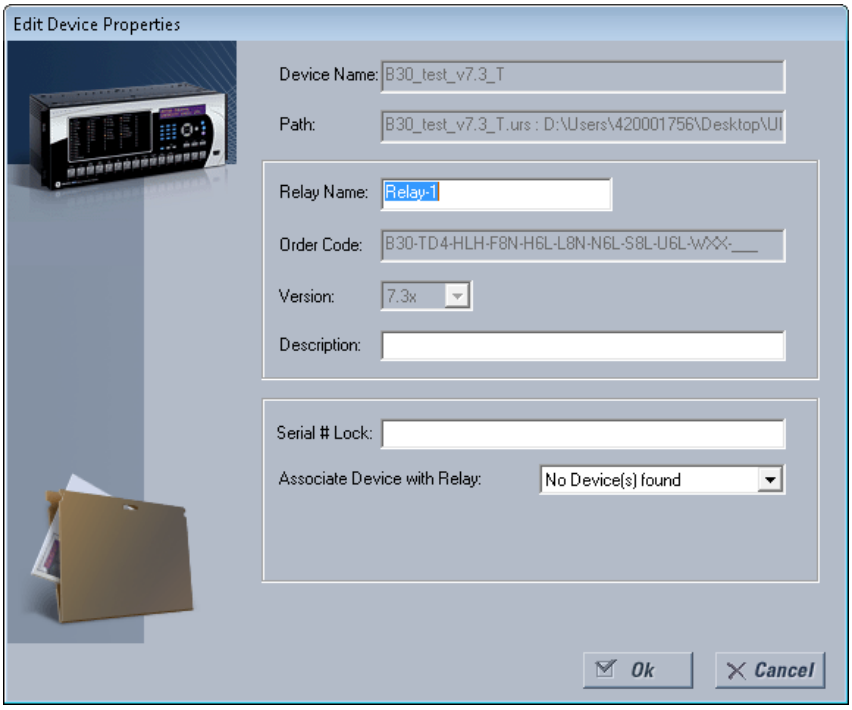

2. Enter the serial number of the L90 device to lock to the settings file in the **Serial # Lock** field.
3. Click the **OK** button to apply the change. The serial number is not validated.

The settings file and corresponding secure FlexLogic equations are now locked to the L90 device specified by the serial number.

4.1.9 Settings file traceability

A traceability feature for settings files allows the user to quickly determine if the settings in a L90 device have been changed since the time of installation from a settings file. When a settings file is transferred to a L90 device, the date, time, and serial number of the L90 are sent back to EnerVista UR Setup and added to the settings file on the local computer. This information can be compared with the L90 actual values at any later date to determine if security has been compromised.

The traceability information is only included in the settings file if a complete settings file is either transferred to the L90 device or obtained from the L90 device. Any partial settings transfers by way of drag and drop do not add the traceability information to the settings file.

Figure 4-13: Settings file traceability

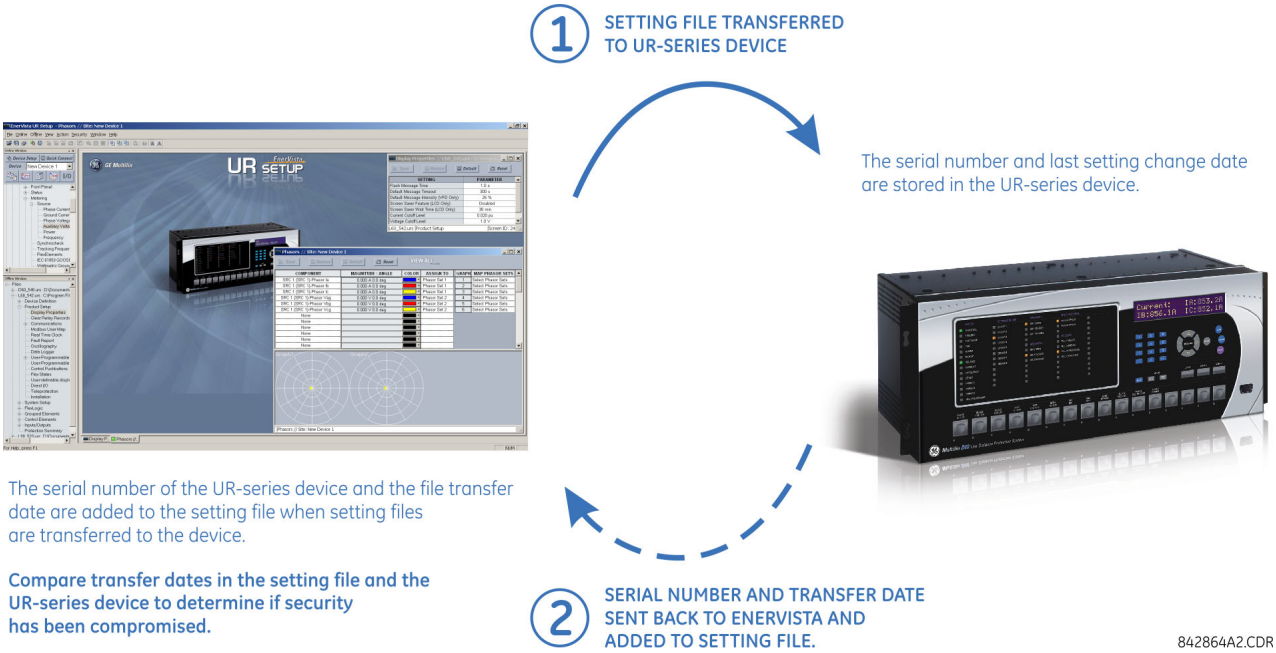

With respect to the figure, the traceability feature is used as follows.

- The transfer date of a settings file written to a L90 is logged in the relay and can be viewed in the EnerVista software or the front panel display. Likewise, the transfer date of a settings file saved to a local computer is logged in the EnerVista software.
- Comparing the dates stored in the relay and on the settings file at any time in the future indicates if any changes have been made to the relay configuration since the settings file was saved.

4.1.9.1 Settings file traceability information

The serial number and file transfer date are saved in the settings files when they are sent to a L90 device.

The L90 serial number and file transfer date are included in the settings file device definition within the EnerVista UR Setup offline window as shown in the example.

Figure 4-14: Device definition showing traceability data

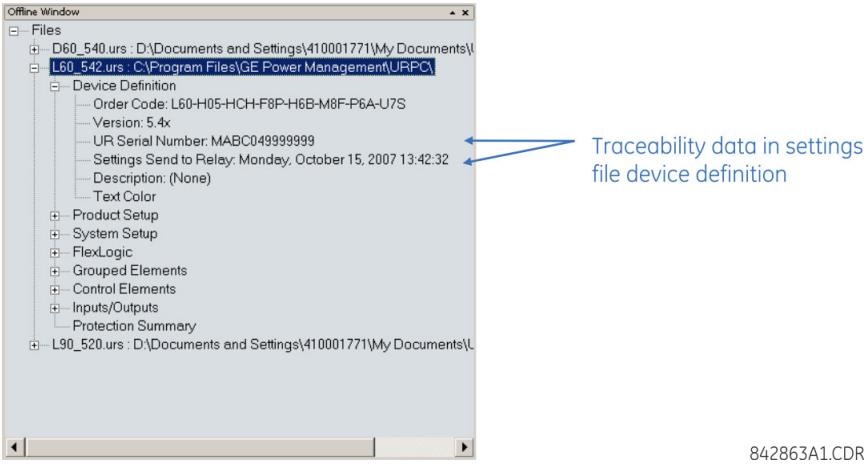

This information is also available in printed settings file reports as shown in the example. A report is generated by right-clicking and selecting the **Print Settings** option.

Figure 4-15: Settings file report showing traceability data

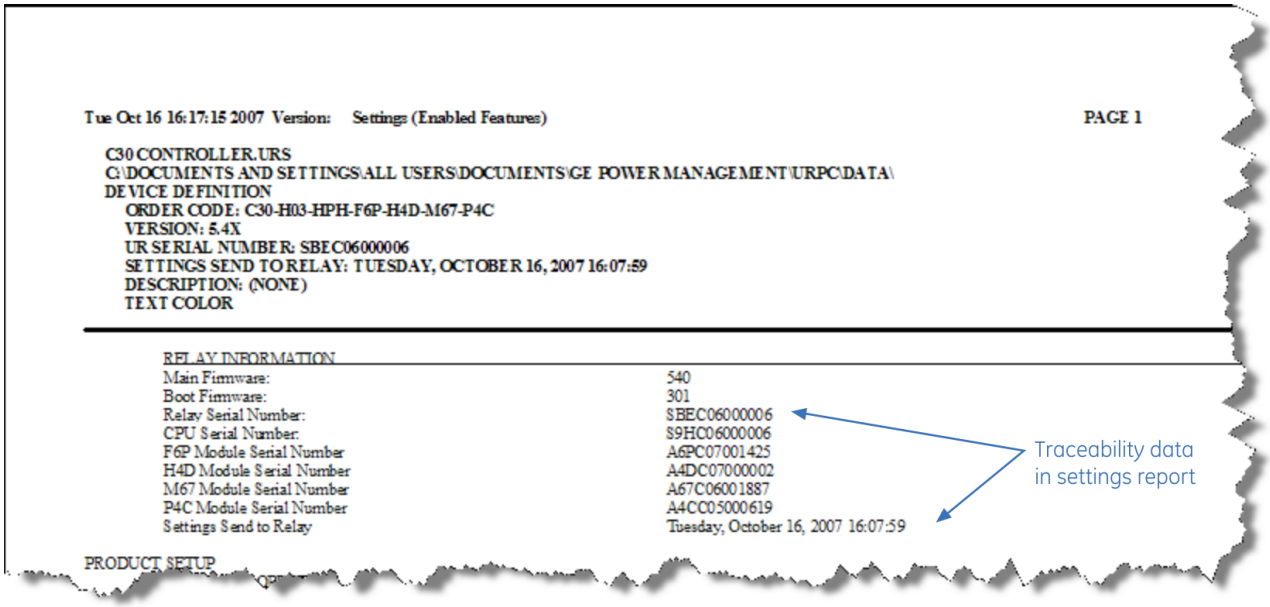

842862A1.CDR

4.1.9.2 Online device traceability information

The L90 serial number and file transfer date are available for an online device through the actual values. Select the **Actual Values > Product Info > Model Information** menu item within the EnerVista online window as shown in the example.

Figure 4-16: Traceability data in Actual Values window

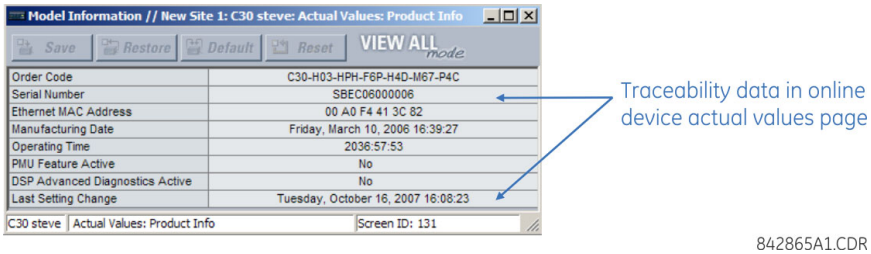

842865A1.CDR

This information is also available from the front panel display through the following actual values:

ACTUAL VALUES ⇨⇩ PRODUCT INFO ⇨ MODEL INFORMATION ⇨⇩ SERIAL NUMBER

ACTUAL VALUES ⇨⇩ PRODUCT INFO ⇨ MODEL INFORMATION ⇨⇩ LAST SETTING CHANGE

4.1.9.3 Additional traceability rules

The following additional rules apply for the traceability feature:

- If the user changes any settings within the settings file in the offline window, then the traceability information is removed from the settings file
- If the user creates a new settings file, then no traceability information is included in the settings file
- If the user converts an existing settings file to another revision, then any existing traceability information is removed from the settings file
- If the user duplicates an existing settings file, then any traceability information is transferred to the duplicate settings file

4.2 Front panel interface

This section explains use of the enhanced, basic, and graphical front panels.

4.2.1 Front panel

4.2.1.1 Enhanced front panel

The enhanced front panel consists of LED panels, an RS232 port, keypad, LCD display, control pushbuttons, and optional user-programmable pushbuttons.

The front panel is hinged to allow access to removable modules inside the chassis. The L90 enhanced front panel can be horizontal or vertical. The following figure shows the horizontal front panel.

Figure 4-17: Enhanced horizontal front panel

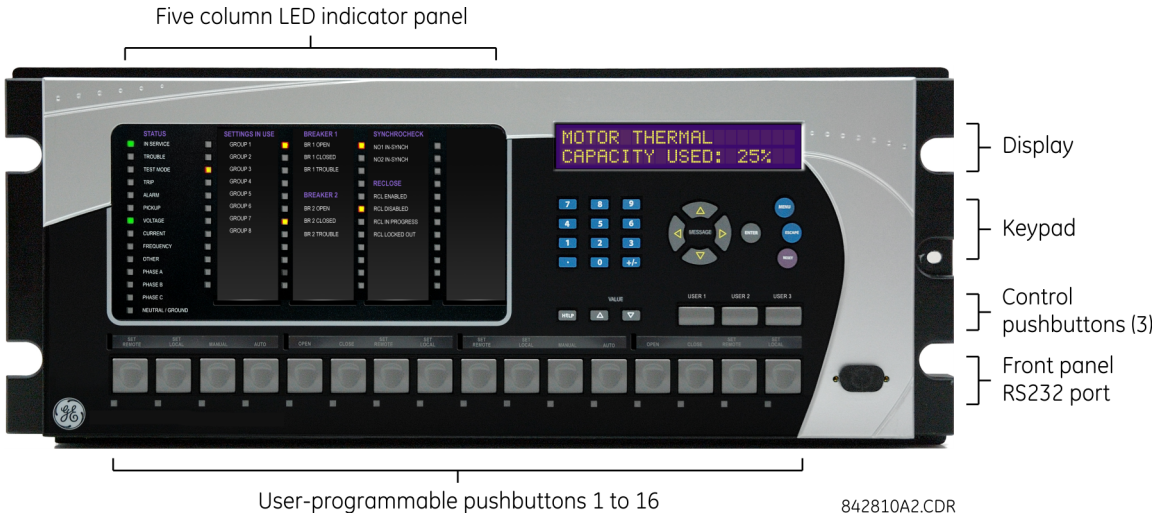

4.2.1.2 Basic front panel

The basic front panel consists of LED panels, an RS232 port, keypad, LCD display, control pushbuttons, and optional user-programmable pushbuttons.

The front panel is hinged to allow easy access to removable modules inside the chassis. There is also a removable dust cover that is to be removed when accessing the keypad. The L90 basic front panel can be horizontal or vertical. The following figure shows the horizontal front panel.

Figure 4-18: Basic horizontal front panel

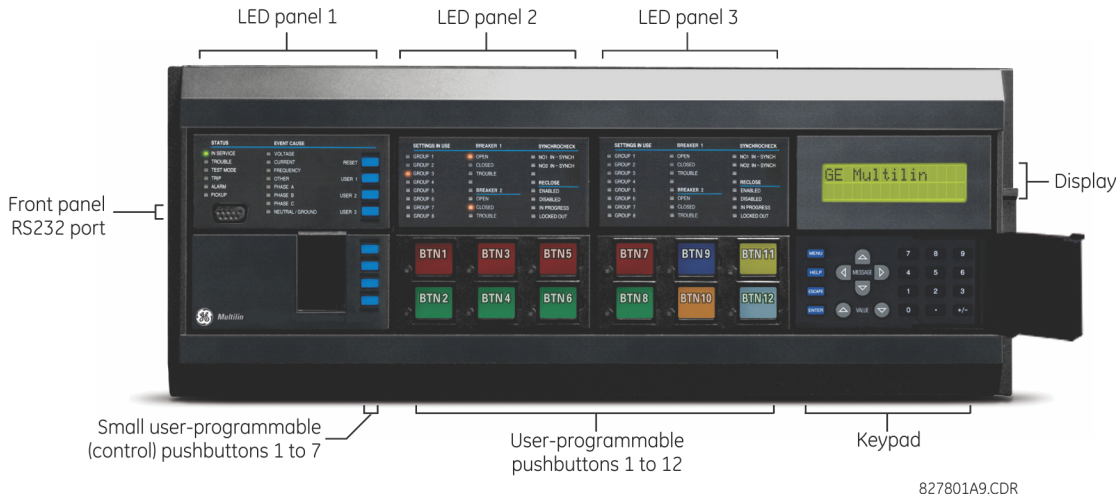

4

The following figure shows the vertical front panel for relays ordered with the vertical option.

Figure 4-19: Basic vertical front panel

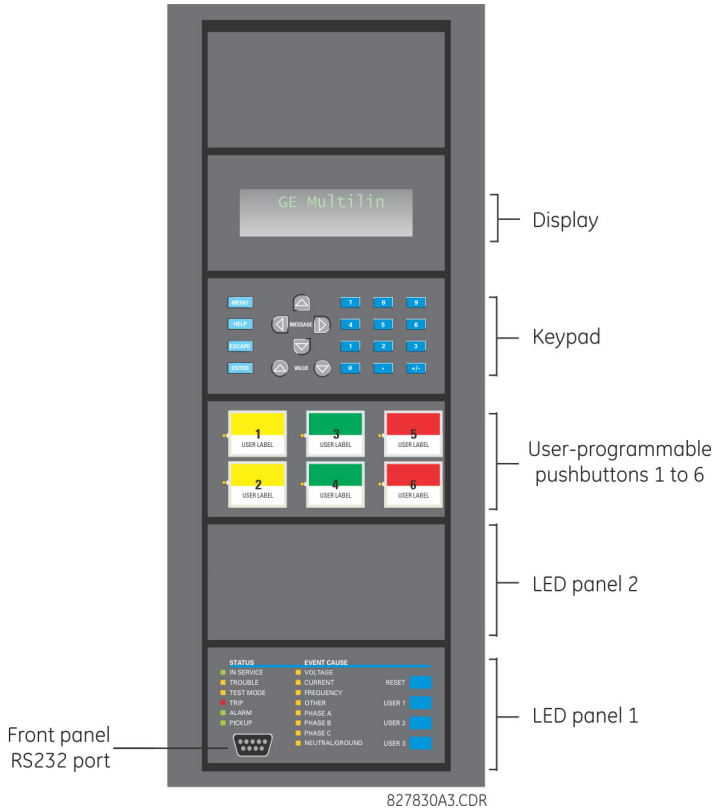

4.2.1.3 Graphical front panel

The graphical front panel consists of a USB port, LED panel, color screen display, user-programmable pushbuttons, and navigation keys. The screen is used to read data, such as metering actual values, alarms, self-test messages, and event records, and for viewing single-line diagrams. Settings can be changed on the front panel, except for the graphical front panel itself and for IEC 61850. The USB port connects to a computer with the EnerVista software and can be used to upgrade the relay and to transfer files and settings. The USB port is the square type B.

User-programmable pushbuttons 9 to 16 can be programmed among the 10 pushbuttons on the left and right sides of the display.

Figure 4-20: Graphical front panel

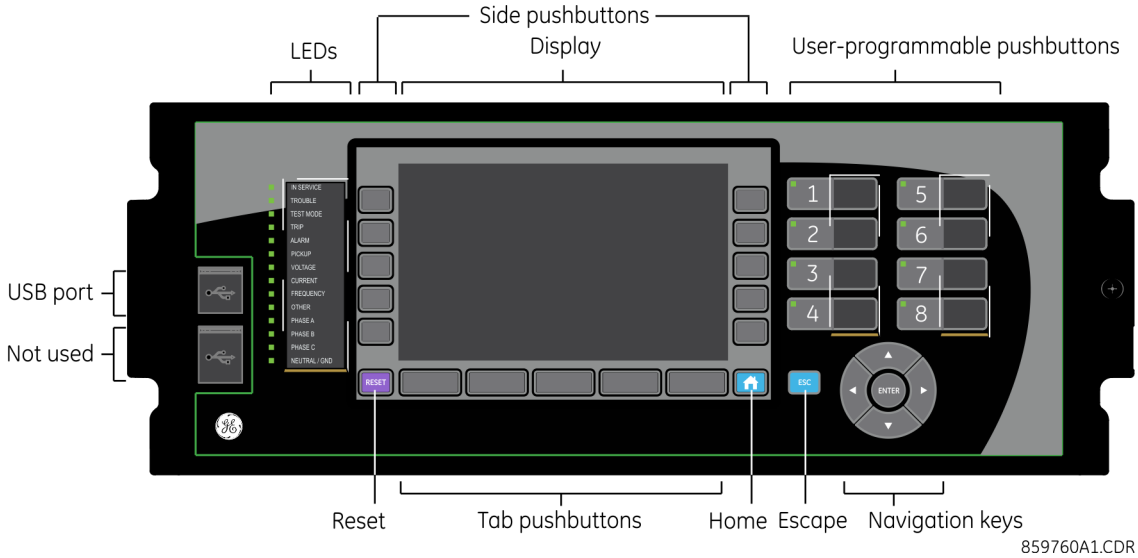

4.2.2 Front panel display

4.2.2.1 Enhanced and basic front panels

Messages display on a backlit liquid crystal display (LCD) to make them visible under poor lighting conditions. When the keypad and display are not actively being used, the display defaults to user-defined messages. Any high-priority event-driven message overrides the default messages.

Up to 20 characters can be used to configure some setting names in the software, while up to 12 characters display on the front panel. A tilde ~ symbol is used for the twelfth character on the front panel when a name extends beyond the 12 character limit. An example is shown for a Virtual Input.

Figure 4-21: Tilde symbols displays with names 12 or more characters long

The front panel can be viewed and used in the EnerVista software, for example to view an error message displayed on the front panel or the LEDs.

To view the front panel in EnerVista software:

1. Click **Actual Values > Front Panel**, then any option.

Figure 4-22: Front panel use in the software (C60 shown)

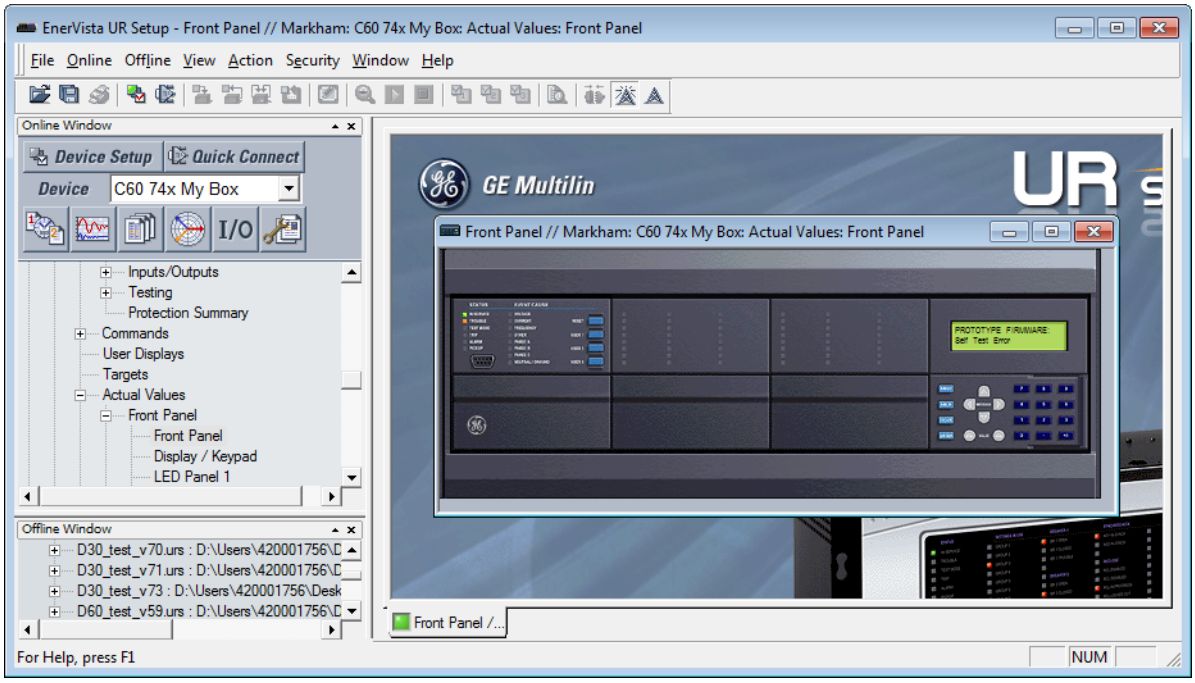

4.2.2.2 Graphical front panel

The graphical front panel has a seven-inch (17.8 cm) color liquid crystal display (LCD). The display provides convenient access to operational data generated by the relay, enables local control of power system devices, and allows display/editing of settings.

Header content varies by page. The home page displays any active icons, such as security status, active setting group, and active target messages. It shows the date and time of the relay. If the relay synchronizes to an external time source via PTP, IRIG-B, SNTP, and so on, the date/time is shown in white, and otherwise in yellow. On pages other than the home page, the header displays the name of the page.

The footer dynamically labels the Tab, or control, pushbuttons immediately below.

Page content displays between the header and footer.

Figure 4-23: Home page example with default content (product information)

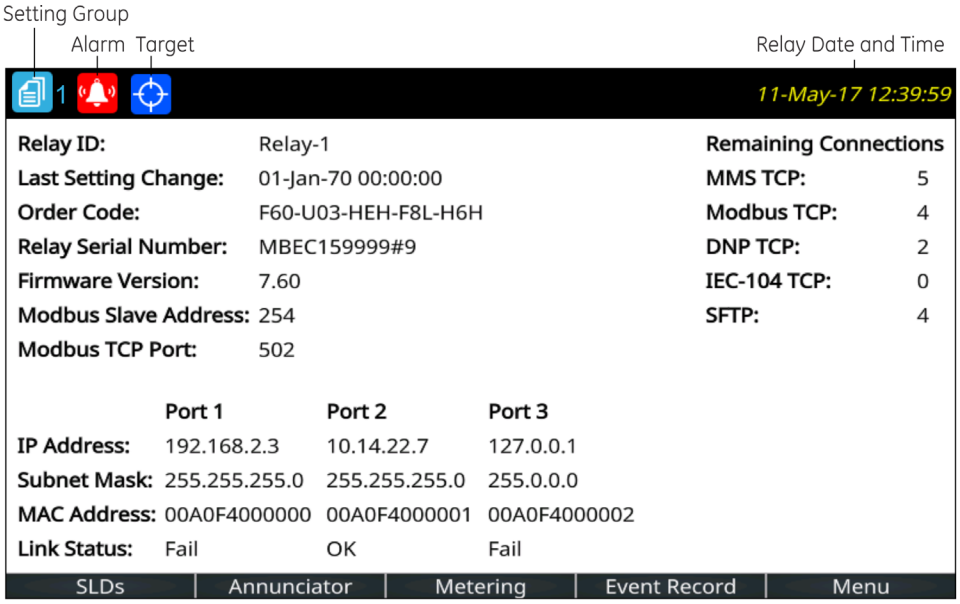

859850A1.cdr

There are multiple ways to navigate pages, by using the pushbuttons and the menu hierarchy. The menu hierarchy is similar to the other front panels whereby you select a submenu using Up and Down arrow pushbuttons, and press the **ENTER** or Right pushbutton. On setting pages, opening a setting for editing is done by highlighting the setting using Up and Down pushbuttons, and pressing the **ENTER** or Right pushbutton.

Home page

Press the **Home** pushbutton to display the root page no matter the state. Any edit, control, or password entry sessions are cancelled. The header shows several relay/system status icons. The default content of the home page is the product information page and can be user-configured to show the content of any single-line diagram page, annunciator page, metering page, or event records page for example. The Tab pushbuttons on the bottom row each navigate to their page. The home page displays for a user-configured time period, then scrolls through user-configured pages, a feature referred to as rolling.

Holding the **Home** pushbutton for one second displays the product information page. The Home page also can display when settings are saved.

Security indicator, showing how many people are logged in, including local and remote users. The lock is red when one or more users are logged in and other otherwise green.
When no users are logged in because login is not required, an icon does not display.

Identifies the active setting group number (not shown)

Displays when an abnormal annunciator alarm is present. Navigate to the Annunciator for details. When there are no such alarms, the icon does not display.
Even when you acknowledge/reset an alarm, the icon displays as long as the condition remains. For example, a breaker trouble alarm displays, you acknowledge it, but the icon remains because the breaker trouble remains.

Active targets symbol, where targets are error messages.
View error messages by pressing the **Menu** Tab pushbutton, then accessing the **TARGETS** menu. Pressing the **RESET** button clears those messages that can be.

Configure the home page in the software under **Settings > Product Setup > Graphical Panel > Home Page**. The menu does not display when there is no graphical front panel.

Rolling mode

After a user-defined period of inactivity, the graphical front display rolls among up to 10 user-selected pages. The roll-to-pages are selected in the EnerVista software, with the defaults being the product information page. Each page displays for less than five seconds. Also, the display backlight intensity is lowered after a configurable period to a user-defined level (0, 10, 20, or 30%); lower intensity extends the life of the display.

Configure rolling mode in the software under **Settings > Product Setup > Graphical Panel > Rolling Mode**.

Operation works as follows:

- Press the **Home** pushbutton or **ESCAPE** pushbutton twice to cancel rolling, restore full backlight intensity, and return to the Home page
- Press the **ENTER**, **ESCAPE**, or a pushbutton to pause rolling once and restore full backlight intensity

Rolling is disabled by setting the delay to 0.

The following buttons display at the top of the window:

- **Save** — Updates the connected device if online or the open setting file if offline with changes made
- **Restore** — Undoes changes that have not been saved
- **Default** — Changes all rolling mode settings to their factory default values
- **Reset** — Displays factory default values. Previous changes are not lost unless you save the reset window.

4

Single-line diagrams

A single-line diagram, or mimic diagram, is a line drawing of elements in an electrical system. The graphical front panel displays up to five single-line diagrams. Each can be configured to show the arrangement of a portion of the power system, the status of circuit breakers and of ground and disconnect switches, user-programmable pushbuttons, and metering and status values. Each also enables control of the displayed power system devices.

One diagram is provided by default, single_bus_line_dsc.mif, which can be modified.

Configure the diagrams under **Settings > Product Setup > Graphical Panel > Single Line Diagram Editor**.

Each single-line diagram page has a user-configurable name that appears in the header and in the footer Tab pushbutton label. Factory default names are SLD 1 to SLD 5. Pages that have no configured content have a blank Tab pushbutton label, and the Tab pushbutton does nothing. The label for the current page has a blue background.

Figure 4-24: Toolbar options for single-line diagram

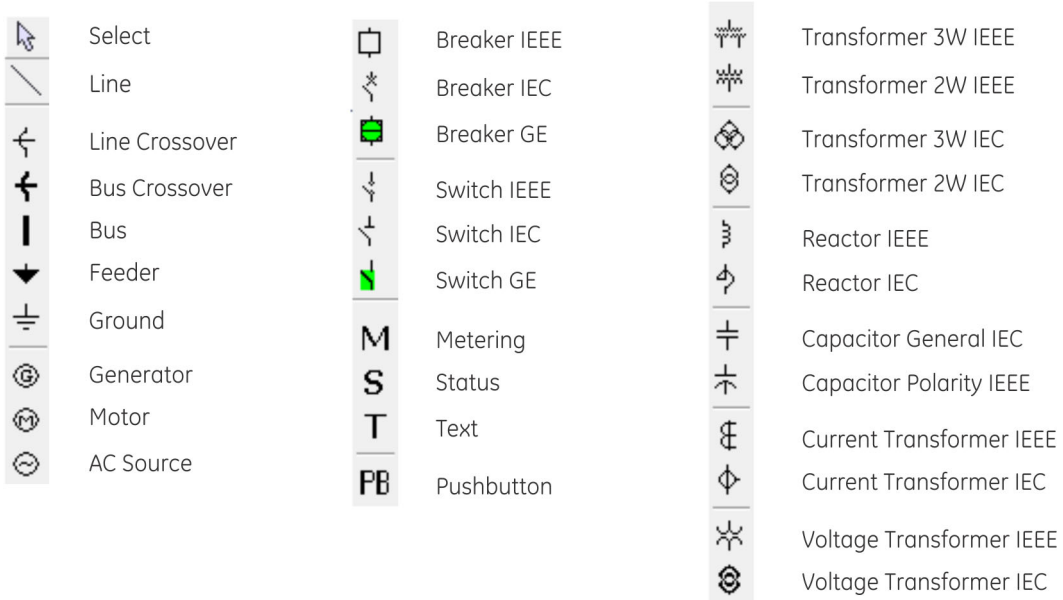

859875A1.cdr

The letters T, S, B, R, and X next to a controllable element have the following meaning. An example (TSB) is shown in the next figure.

- T — The element is "tagged." Local and remote control of the device are inhibited, both open and close. Tripping is unaffected unless additional logic has been configured.
- S — The position indication of the device is substituted with a manually entered value
- B — Blocking open/close command is bypassed
- R — Autoreclose is enabled and not blocked
- X — The device is out-of-service and control is not available

Single-line diagram example

The following example outlines how to create a circuit breaker diagram, then how to close the second circuit breaker. The figure shows six switches (SW, M), two breakers (CB), feeder (arrow), and ground (lined arrow).

Figure 4-25: Single-line diagram of open circuit breakers

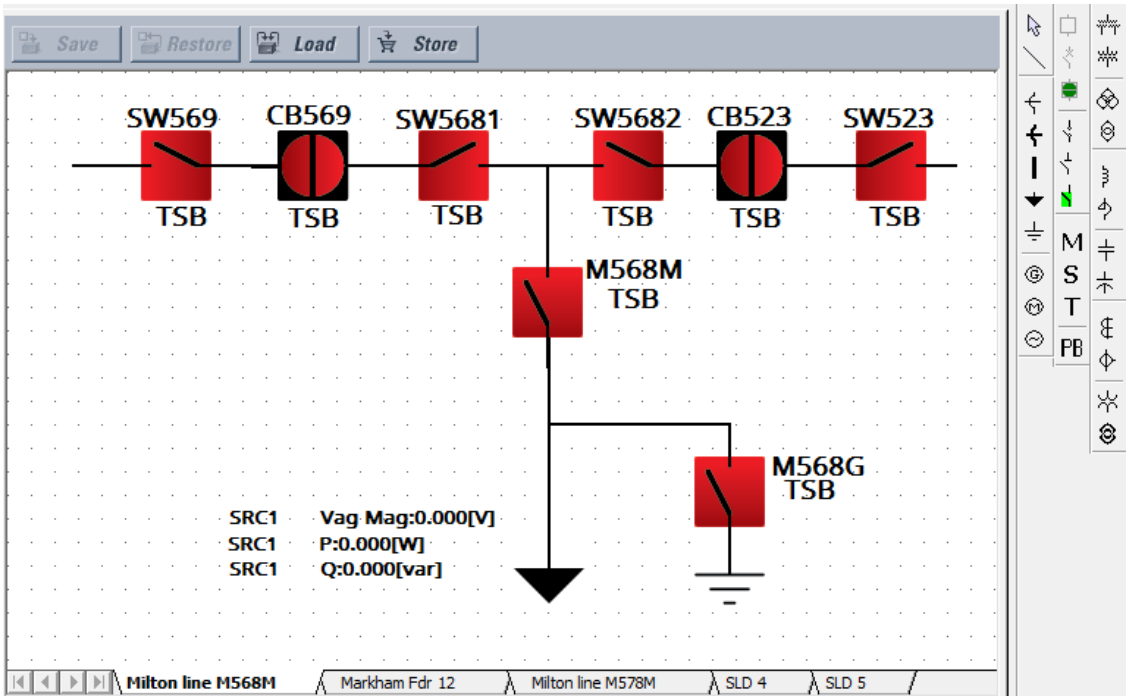

Under **Settings > System Setup > Switches** and **Breakers**, enable and name the six switches and two breakers. Switch 6, M568G, has the A/3 Pole Opened setting on.

Figure 4-26: Configure Breaker and Switch settings

Save | Restore | Default | Reset | VIEW ALL mode

SETTING	PARAMETER
Switch 1 Function	Enabled
Switch 1 Name	SW569
Switch 1 Mode	3-Pole
Switch 1 Open	OFF
Switch 1 Block Open	OFF
Switch 1 Close	OFF
Switch 1 Block Close	OFF
Switch 1 Phase A/3 Pole Closed	ON
Switch 1 Phase A/3 Pole Opened	OFF
Switch 1 Phase B Closed	OFF

Switch 6 Function	Enabled
Switch 6 Name	M568G
Switch 6 Mode	3-Pole
Switch 6 Open	OFF
Switch 6 Block Open	OFF
Switch 6 Close	OFF
Switch 6 Block Close	OFF
Switch 6 Phase A/3 Pole Closed	OFF
Switch 6 Phase A/3 Pole Opened	ON
Switch 6 Phase B Closed	OFF
Switch 6 Phase B Opened	OFF

Save | Restore | Default | Reset | VIEW ALL mode

SETTING	PARAMETER
Breaker 1 Function	Enabled
Breaker 1 Push Button Control	Enabled
Breaker 1 Tagging	Enabled
Breaker 1 Substitution	Enabled
Breaker 1 Bypass	Enabled
Breaker 1 AR Block	Enabled
Breaker 1 Name	CB569
Breaker 1 Mode	3-Pole
Breaker 1 Open	OFF
Breaker 1 Block Open	OFF
Breaker 1 Close	OFF
Breaker 1 Block Close	OFF
Breaker 1 Phase A/3-Pole Closed	ON
Breaker 1 Phase A/3-Pole Opened	OFF
Breaker 1 Phase B Closed	OFF

4

In the EnerVista software, open the single-line diagram editor under **Settings > Product Setup > Graphical Panel > Single Line Diagram Editor**.

Add the four switches for the top line by clicking the GE switch symbol in the toolbar, then clicking in the window. (If the UR device is not online, the software attempts to connect.) Right-click to edit properties. Rotate switches SW569 and SW5682 to 270 degrees. Rotate switches 5681 and SW523 to 90 degrees. Ignore the TSB text.

Add the two lower switches. Leave rotation at 0 degrees.

Add the two breakers by clicking the GE breaker symbol in the toolbar, then click in the window. Right-click to edit properties, rotating 90 degrees and setting the color to red (open).

Draw lines to fill in the gaps between the switches and breakers by clicking the line symbol in the toolbar, then clicking and dragging on the canvas to draw a line. Do not draw a single line for the top line, but instead draw several small lines.

Add the feeder arrow head by clicking the symbol in the toolbar, then clicking the end of the line.

Add the ground symbol by clicking the symbol in the toolbar, then clicking the end of the line.

Add three metered values by clicking the M symbol in the toolbar, then clicking near the feeder arrow. Double-click to edit. The three metered values are SRC1 Vag Mag, SRC 1 P, and SRC 1 Q.

Name the page by right-clicking the bottom tab. Here, page 1 is renamed "Milton line M568M."

Note that active symbols in the toolbar display and those that are inactive are greyed-out.

The diagram has been created. Save it by clicking the **Save** button.

Next is to close circuit breaker CB523. This circuit breaker is shown at the top right of the figure. A vertical line means that it is open, and the color can be set as red or green.

On the graphical front panel, press the **Home** pushbutton, then press the **SLDs** pushbutton to activate the first single-line diagram page.

Figure 4-27: Single-line diagram on graphical front panel

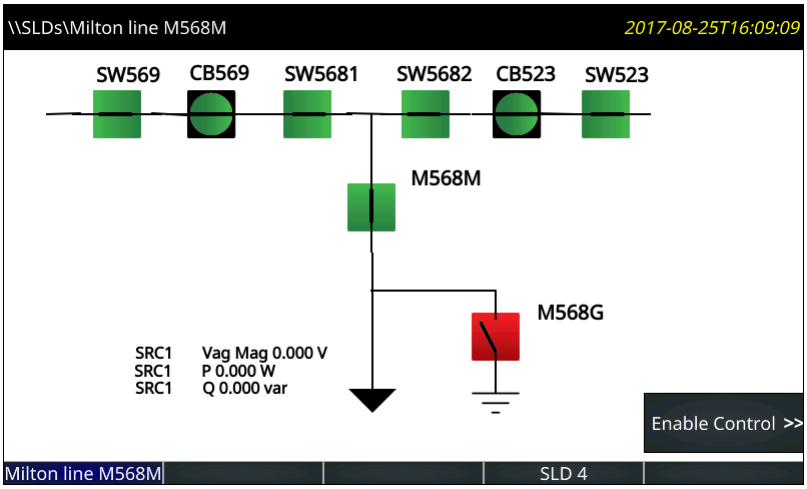

Press the **Enable Control** pushbutton. The side pushbutton labels display.

Figure 4-28: Side pushbutton display on graphical front panel

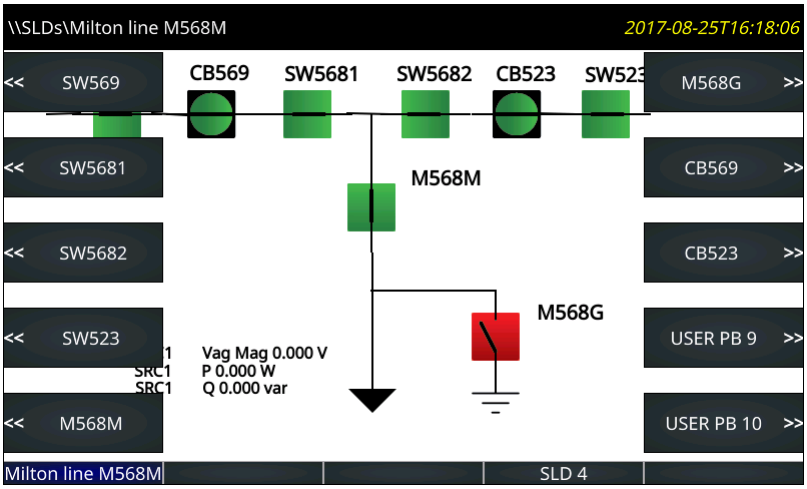

Press the **CB523** breaker pushbutton. Its menu displays.

Figure 4-29: Pushbuttons to control the breaker

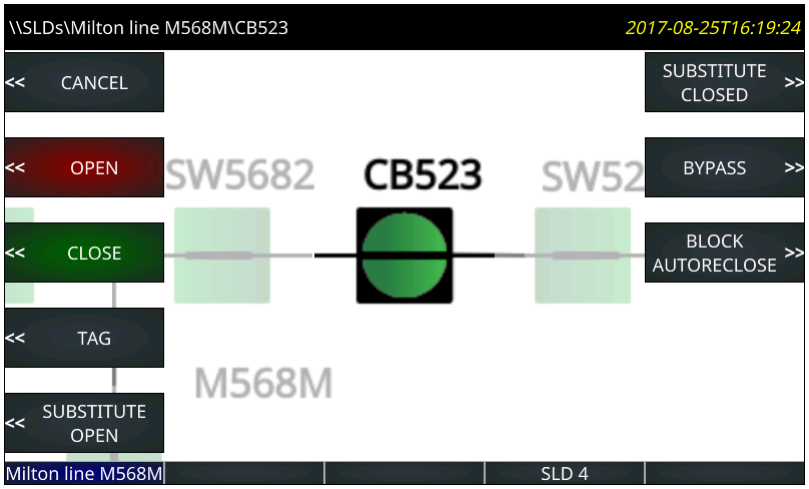

4

Press the pushbutton to close the breaker, confirming the action at the prompt.

In this diagram, the two circuit breakers have hard-coded actions available to them. No action is possible on the switches.

Note the USER PB 9 and 10 entries in the earlier figure. As outlined later, these are activated by clicking the PB icon on the software toolbar. These two pushbuttons can be configured under **Settings > Product Setup > User-Programmable Pushbuttons**.

Single-line diagram editor use

Start the application in the EnerVista software under **Settings > Product Setup > Graphical Panel > Single Line Diagram Editor**.

The following buttons display at the top of the window:

- **Save** — Updates the connected device if online or the open setting file if offline with changes made
- **Restore** — Undoes changes that have not been saved
- **Load** — Opens single-line diagram files, which replaces one or all five windows with that in the file selected
- **Store** — Saves all five single-line diagrams as a .mif file

On the right side of the window is a toolbox containing the components that can be added to the window. These include line, breaker, disconnect, metering value, status value, text, and miscellaneous power system elements. To create the single-line diagram, click the symbol, then click in the window. Once in the window, the component can be positioned and its properties modified. When using the pointing device to position a component, the component can snap to the nearest snap point. Snap points are in a 4 x 4 rectangular grid. The keyboard arrow keys move the selected component(s) in one pixel increments when snap locations are inadequate. Multiple components can be selected and moved or deleted as a group, or copied and pasted to another location. Right- or double-clicking a component opens the properties window.

Ctrl+A selects all objects in a diagram.

Lines

Line components represent power system buses or electrical connections between power system elements. They can also be used as visual dividers and underline.

To add a line component, click it in the toolbox, then click in the window. Double-click a line to open its properties window to set orientation.

Figure 4-30: Line and bus crossover symbols

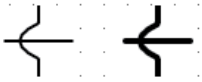

Static symbols

Static symbols depicting power system elements are available. For information, see the ANSI/IEEE 315A and IEC 60617 standards.

Up to 32 static symbols can be used per single-line diagram.

To add a symbol, click it in the toolbox, then click in the window. Double-click the symbol to open its properties window to set orientation.

Figure 4-31: IEEE and IEC static symbols

Device	Symbols
3W Transformer	
2W Transformer	
Rotating machines	G M ~
Reactor	
Ground	
Connector, Bus, Feeder, Crossover	
CT	
VT / PT	
Capacitor	

Breaker and disconnect components

Breaker components and disconnect components are interfaces to the UR breaker control elements and disconnect switch elements. On a UR device they show dynamically the breaker or disconnect status as calculated by the element, and provide means to open, close, tag, bypass interlock, and substitute (force status of) the element. Breaker components in addition provide means to enable/disable breaker autoreclose.

Each breaker and disconnect component can be configured to use UR-style symbols, IEC symbols, or simple square/slash symbols as shown in the following figure. The symbols assume horizontal symbol orientation, red - closed color, and green - open scheme. With vertical orientation, they are rotated 90 degrees.

4

Figure 4-32: Single-line diagram symbols

	IEEE style (IEEE 315)	IEC Style (IEC 60617)	GE Style
Disconnect Switch (Open)			(1)
Disconnect Switch (Intermediate)			
Disconnect Switch (Closed)			(1)
Disconnect Switch (Bad Status/Disabled)	?	?	?
Breaker (Open)			(1)
Breaker (Closed)			(1)
Breaker (Bad Status/Disabled)	?	?	?
Breaker racked-out (Open)			(1)
Breaker racked-out (Closed)			(1)
Breaker racked-out (Bad Status)	?	?	?
Breaker racked-in (Open)			(1)
Breaker racked-in (Closed)			(1)
Breaker racked-in (Bad Status)	?	?	?

(1) Red/Green color scheme for closed/open is configurable by the user.
(2) 3-position disconnect switches can be represented by grouping two 2-position disconnects switches.

To add a breaker or disconnect component, click it in the toolbox, then click in the window. Up to 10 dynamic components can be added to each single-line diagram.

Breaker and disconnect components have three different parts: label, symbol, and flags. Drag each of its parts to their final locations. Double or right-click any of these parts to open the properties window. Properties that can be edited are label text, breaker control element or disconnect switch element number, symbol orientation (horizontal or vertical), color scheme (red - closed, or red - open), and assigned side button (if any). If the selected breaker or disconnect element does

not exist in the target relay or has not been enabled, then the component is displayed in the graphical front panel and in the drawing edit window in grey. The color scheme selection has no effect when an IEC style symbol is used because IEC style symbols do not use color.

Symbol orientation

The figure shows the orientation available for the breaker and disconnect switch (taking Open status as examples). The default position is 0 degrees.

Figure 4-33: Single-line diagram symbol orientation

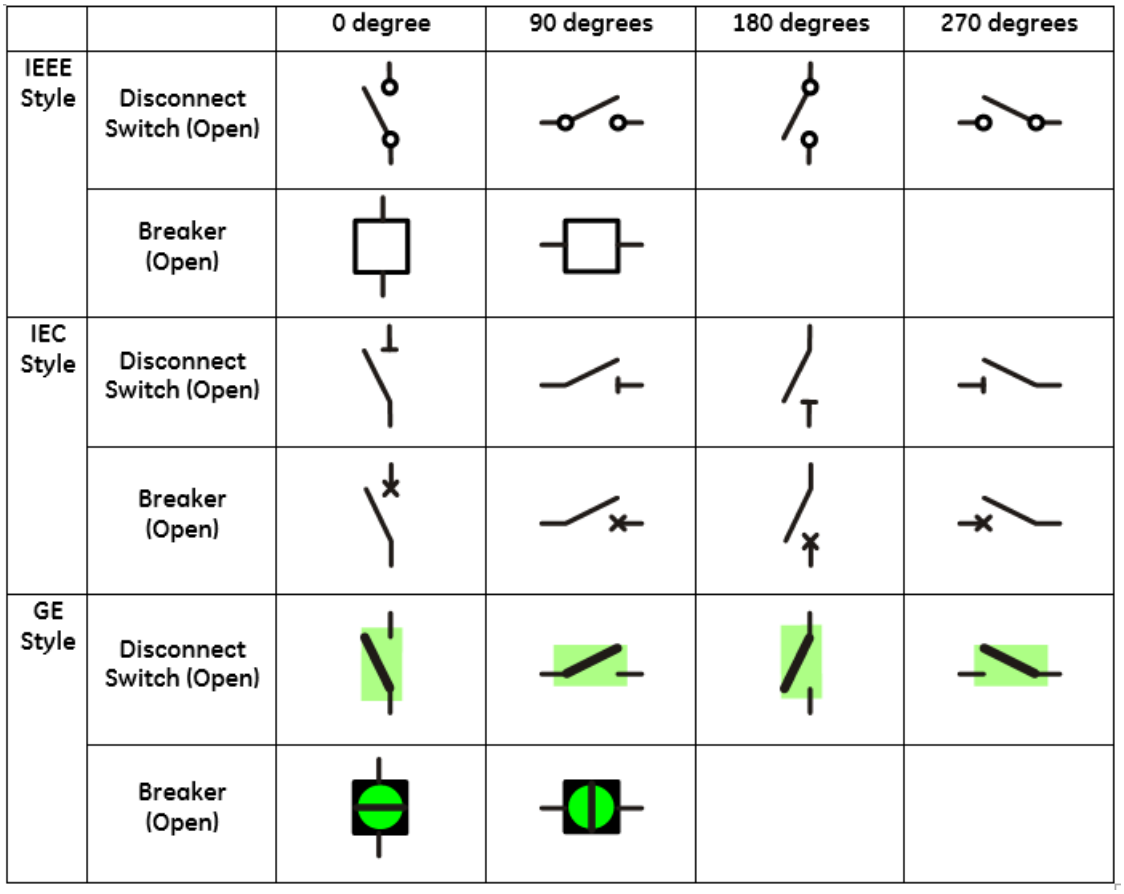

A question mark displays in a symbol on the graphical front panel when status is bad. The question mark does not rotate with orientation.

Figure 4-34: Symbols when status is bad

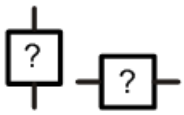

The following figures show the orientation available for the static components. The default position is 0 degrees.

Figure 4-35: Single-line diagram static symbol orientation (sheet 1 of 2)

	0 degree	90 degrees	180 degrees	270 degrees
3W Transformer			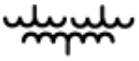	
2W Transformer			0 degree	90 degrees
3W Transformer				
2W Transformer			0 degree	90 degrees
Rotating machines		0 degree	0 degree	0 degree
Reactor			0 degree	90 degrees
Reactor				
Capacitor				
Capacitor			0 degree	90 degrees

Figure 4-36: Single-line diagram static symbol orientation (sheet 2 of 2)

	0 degree	90 degrees	180 degrees	270 degrees
Ground				
Connector			0 degree	90 degrees
Bus			0 degree	90 degrees
Feeder				
Crossover			0 degree	90 degrees
CT				
CT				
VT / PT			0 degree	90 degrees
VT / PT			0 degree	90 degrees

User-programmable pushbuttons

User-programmable pushbuttons 1 to 8 are physical pushbuttons on the right side of the graphical front panel, numbering down the two columns.

User-programmable pushbuttons 9 to 16 can be programmed among the 10 pushbuttons on the left and right sides of the screen display. They show dynamically and provide a means to perform the same control as the other pushbuttons.

Figure 4-37: Assigning pushbuttons 9 to 16 to the display

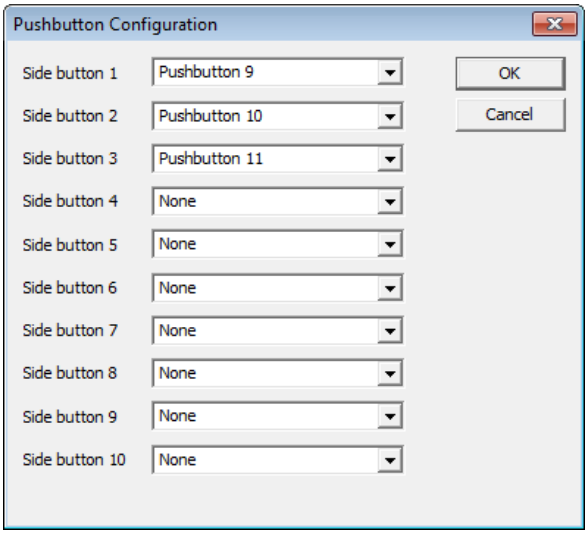

4

As an example, if you set up a single-line diagram with two breakers and six switches, then eight of the side pushbuttons are used automatically for control of the breakers and switches. Side pushbuttons 9 and 10 are available. In the single-line diagram, let us set side pushbutton 9 to clear event records as follows:

- Show side pushbutton 9 on the graphical front panel — Click the PB symbol in the toolbar, then set **Side button 9** to pushbutton 9 in the drop-down list. This pushbutton then displays when appropriate on the right side of the screen display.
- Program event record clearing — Set **Settings > Product Setup > Clear Relay Records > Clear Event Records** to FlexLogic operand PUSHBUTTON 9 ON
- Program pushbutton 9 — Set **Settings > Product Setup > User-Programmable Pushbuttons > Pushbutton 9 Function** to "Self-reset." When pressed, pushbutton 9 clears the event records.

To instead set the second user pushbutton (not a side pushbutton) to clear events, follow the second and third bullet points, selecting settings of PUSHBUTTON 2 ON and Pushbutton 2.

Metering components

Metering components show dynamically the value of a FlexAnalog operand or actual value. Up to 16 metering components can be added to each single-line diagram.

To add a metering component, click the M symbol in the toolbox, then click in the window. Drag it to its final location. Double-click it to open the properties window. The figure shows the properties that can be edited.

Figure 4-38: Metering properties

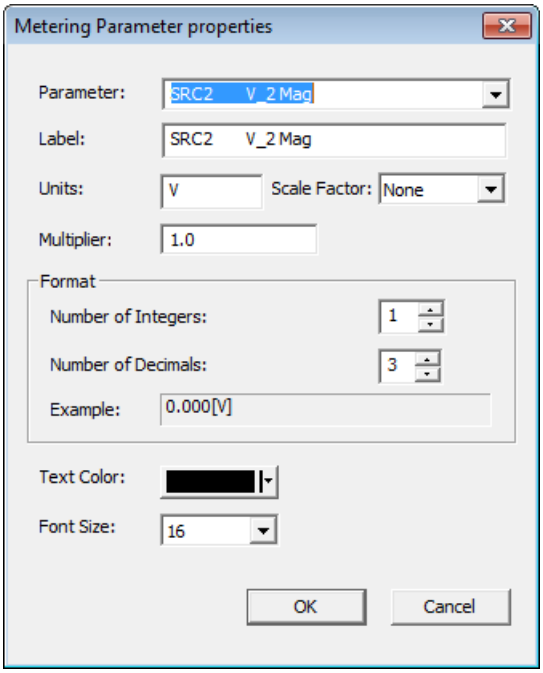

Status components

Status components show dynamically the value of a FlexLogic operand. Up to 16 can be used in a diagram and 30 in all single-line diagrams.

An example is to show the Off or On state of the ANY MAJOR ERROR FlexLogic operand. The name of the operand displays in the single-line diagram editor, then as Off or On on the graphical front panel.

To add a status component, click the S symbol in the toolbox, then click in the window. Drag it to its final location. Double-click it to open the properties window. Properties that can be edited include parameter (any FlexLogic operand), text color background color, and on and off text.

Optionally add a text label to display beside the status.

Text

Text components show a single line of user-configured text.

Up to 16 text components can be used per single-line diagram.

To add a text component, click the T symbol in the toolbox, then click in the window. Drag it to its final location. Double-click it to open the properties window. Properties that can be edited are text, color, and size.

Annunciator

An annunciator is a grid of small windows for alarms, actual values, self-test messages, and product information.

The graphical front panel emulates a conventional annunciator panel. The annunciator has 96 windows, each with a description of the alarm condition that lights the window. The windows are arranged in rows and columns of 3 x 4, 4 x 6, or 6 x 8 over several pages. Each window can have up to three lines of configurable text, and one line can instead be a metered value. Normally the window background is dark, and when the configured FlexLogic operand becomes On, the window lights up.

The figure shows that two alarms are active. One alarm is configured red and the other alarm is configured blue. The red alarm type is Self Reset, so the alarm displays in a solid color. The blue alarm type is Acknowledgeable, so the alarm flashes until it is acknowledged, for example by navigating with the arrow keys and pressing the **ENTER** button. The alarm then remains blue until the trigger condition is eliminated.

Figure 4-39: 3x4 annunciator page with two active windows

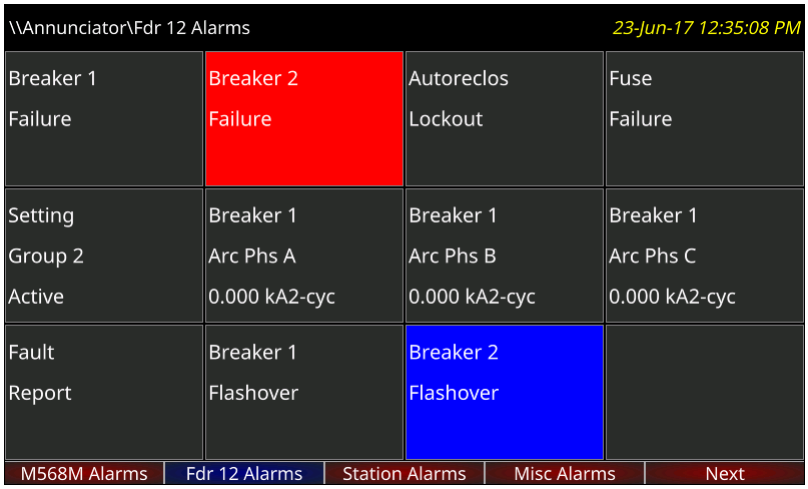

4

To display the annunciator, press the **Home** pushbutton, then the **Annunciator** Tab pushbutton. If there is one or more window in alarm or requiring reset, the annunciator page showing the first of these opens. Otherwise the first annunciator page opens.

Alarms do not display automatically. Set the Home page and/or rolling pages to display annunciator pages.

The Tab pushbutton labels populate with the annunciator pages. The label text for each annunciator page is configurable and displays in the header and Tab label. The current page has a blue Tab label. Tab labels for annunciator pages that have an active window (that is, on, latched, or unacknowledged) are red. Pages where alarms are not triggered have a grey Tab label. Pages that have no configured windows do not have Tab pushbuttons and do not display.

The Up, Down, Left, and Right pushbuttons cause the selection to move one window in the indicated direction. Pressing the Right pushbutton past the last window in a row scrolls the display to any next annunciator page, not the next row. The behavior is similar for the other pushbuttons, for example pressing the Up pushbutton while in the top row goes to any previous page. If no previous page exists, no action occurs.

Annunciator windows are positioned statically, so that all windows are visible no matter their state.

Alarm types of each window can be configured as Self Reset, Latched, or Acknowledgeable. In Self Reset mode, the window lighting follows the state of the configured FlexLogic operand. The self-reset mode alarm sequence conforms to ISA-18.1-1979 (R2004) standard type A 4 5 6.

Figure 4-40: Annunciator alarm sequence in Self Reset mode

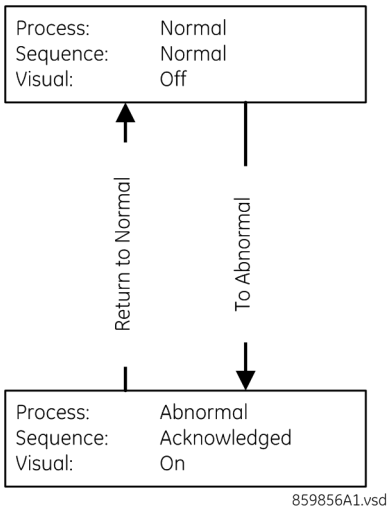

Latched mode is intended for transient signals such as trip, and it conforms to ISA-18.1-1979 (R2004) standard type M 6.

Figure 4-41: Annunciator alarm sequence in Latched mode

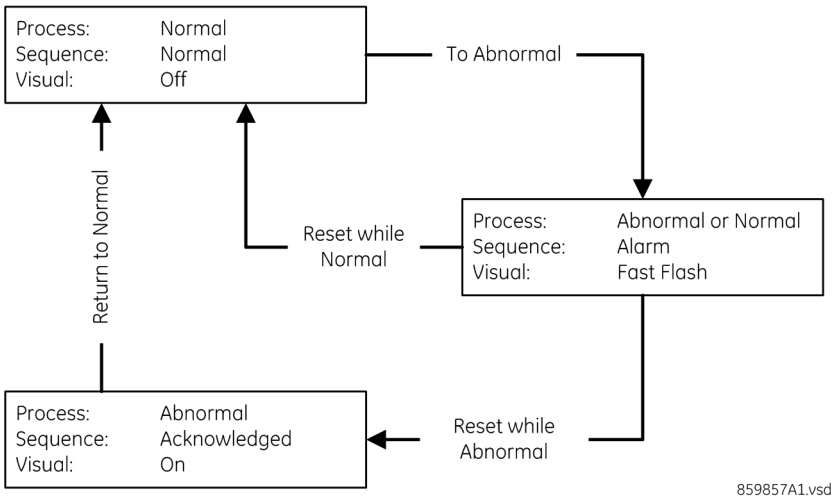

In Acknowledgeable mode, both Off to On and On to Off state changes in the configured operand cause the background to flash; the window must be acknowledged/reset to cancel flashing. This mode conforms to ISA-18.1-1979 (R2004) standard type R-6.

Figure 4-42: Annunciator alarm sequence in Acknowledgeable mode

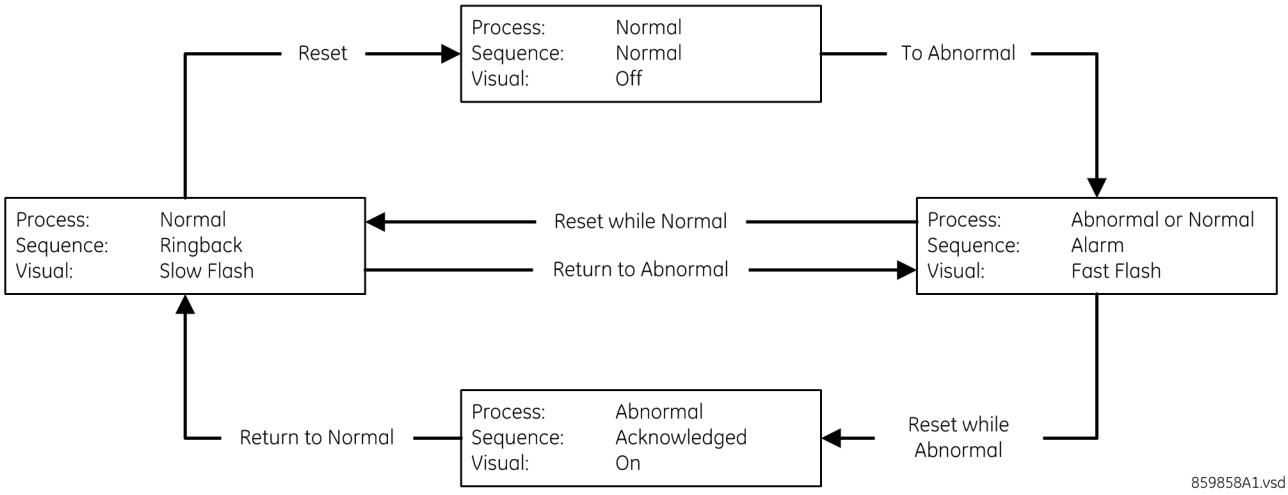

To reset all annunciator windows:

1. In the software, access **Actual Values > Graphical Panel > Annunciator Panel**.

To acknowledge/reset all annunciator windows on a page:

1. On the graphical front panel with none of the annunciator windows selected, press the **RESET** pushbutton once for acknowledgement and twice for reset. The flashing stops.

To acknowledge an annunciator window:

1. On the graphical front panel, press the Up, Down, Left, and Right pushbuttons to select the window, so that is has a yellow outline. Press the **RESET** or **ENTER** pushbutton. While a window is selected, if that window has activated since

the last restart, the date/time of the last activation of that window displays in the header.

An alarm remains in an alarm state (for example, displays red) when the condition remains. That is, if you acknowledged a flashing alarm but the alarm condition remains, the background color remains red.

The **SETTINGS > INPUTS/OUTPUTS > RESETTING > RESET ANNUNCIATOR** setting can be used to select a FlexLogic operand that when activated acknowledges/resets all annunciator windows.

Annunciator editor

The annunciator editor is used to configure alarms and actual value displays for the graphical front panel.

The path in the EnerVista software is **Settings > Product Setup > Graphical Panel > Annunciator Editor**.

The figure shows the annunciator editor and its preview window. The page name is entered as General at the top right. Acknowledgeable and self-resetting alarms are set for basic functions, such as online/offline, Ethernet ports, unauthorized access/failed logins, and battery failure. The text to display in the annunciator window is entered. The IN SERVICE LED is set to be green because when the device is on, this LED is green. The preview shows what the annunciator looks like with all alarms triggered. The last window is not configured and displays blank/grey. In order for the Ethernet and battery alarms to work, the corresponding self-test alarms have been enabled under **Settings > Product Setup > User-Programmable Self Tests** (not shown). The LEDs can be viewed on the front panel, so adding them to the annunciator is for illustrative purposes only.

Figure 4-43: Annunciator editor and preview window

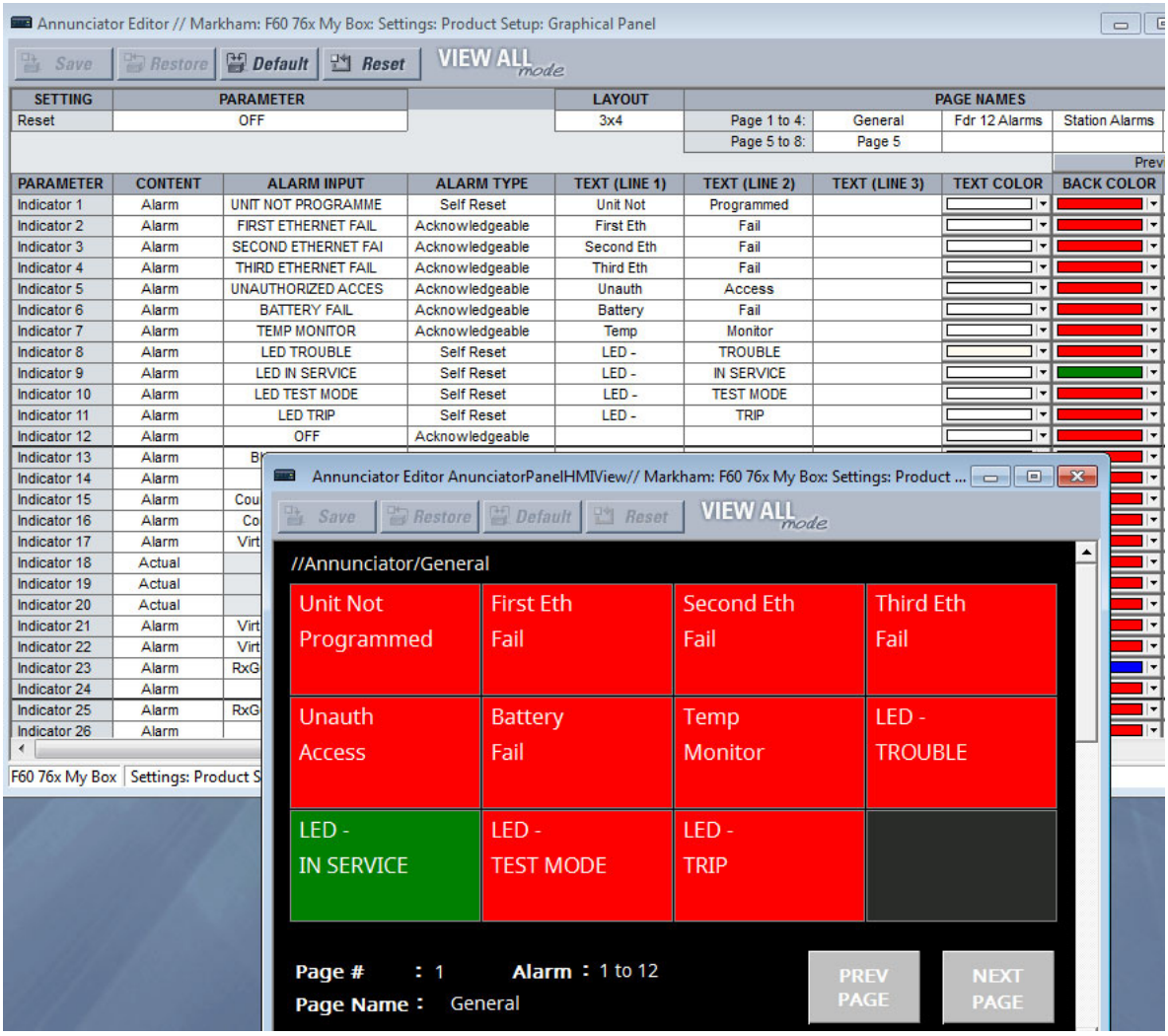

The three page layouts (3 × 4, 4 × 6, and 6 × 8) select the number of rows x columns of windows that appear in a page. Annunciator window size and text size shrink as the number of annunciator windows in a page increases.

Properties that can be edited include alarm type (acknowledgeable, latched, self-reset), alarm input (any FlexLogic operand), text color, and alarm background color.

The following buttons display at the top of the window:

- **Save** — Updates the connected device if online or the open setting file if offline with changes made
- **Restore** — Undoes changes that have not been saved
- **Default** — Changes all annunciator settings to their factory default values
- **Reset** — Displays factory default values. Previous settings are not lost unless you save the reset window.

Metering editor

The metering editor is an actual values display tool. It creates pages of actual values for the graphical front panel. There are two types: tables and phasor diagrams. Tabular actual values pages have settings to configure, while phasor actual values pages have no settings. Five tabular metering pages can be configured, while there can be a phasor page for each configured AC source. They display on the graphical front panel using the **Metering** Tab pushbutton.

The path to the editor is **Settings > Product Setup > Graphical Panel > Metering Editor**.

Figure 4-44: Metering editor with preview window

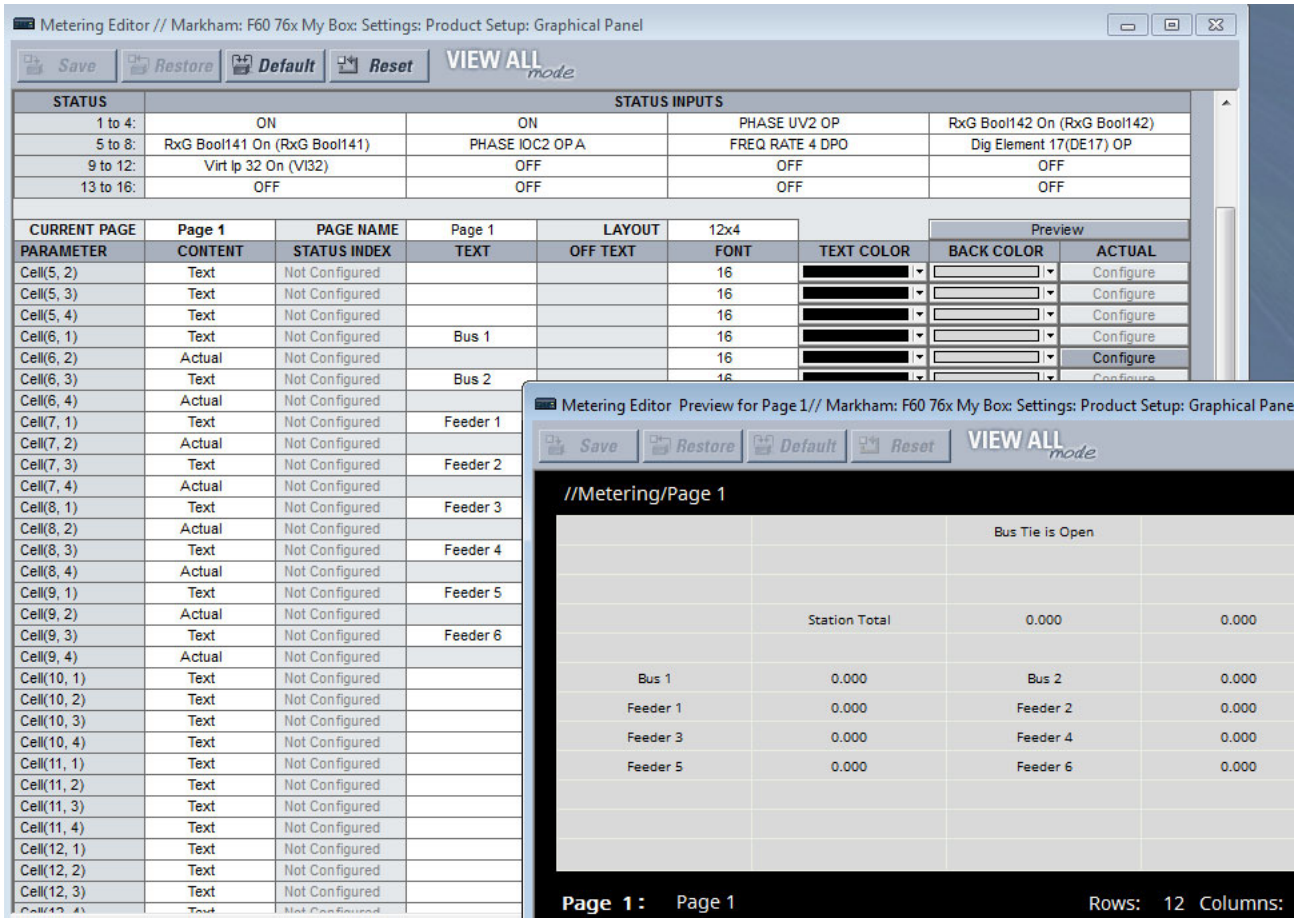

The inputs are selected at the top. Select from the drop-down list or start typing in the field.

The page, page name, and grid layout are set below the inputs.

Content to display is configured with the cell lines. The content can be actual values, a status indicator, or text.

- Actual value — Select from the FlexAnalogs applicable to the L90, where a FlexAnalog is an analog parameter
- Status — Select from the FlexLogic operands identified in the Status Inputs at the top of the window. An example is to display text to indicate whether the BATTERY FAIL operand is on or off.
- Text — Enter text to display in the table, for example name of table or column heading

If the metering input is other than OFF, the value of the selected metering input displays, formatted according to the size, text color, units, multiplier, and decimal configuration. Otherwise either the Text or the Off Text displays depending on the value of the operand selected by setting Status Input/Index.

A maximum of eight Status Inputs/Indexes can be used per metering page and 16 in all metering pages.

The following buttons display at the top of the window:

- **Save** — Updates the connected device if online or the open setting file if offline with changes made
- **Restore** — Undoes changes that have not been saved
- **Default** — Changes all actual value settings to their factory default values
- **Reset** — Displays factory default values. Previous settings are not lost unless you save the reset window.

Configurable navigation editor

Configurable Navigation is a feature that opens specified pages when specific FlexLogic operands are activated. This feature is useful to open the annunciator page containing an annunciator window that has entered its abnormal state.

In the example shown, failure of any of the three Ethernet ports triggers the Product Information page to display. With unauthorized access (such as wrong password), IRIG-B clock failure, or breaker trouble, the Event Records display. When a breaker opens, a single-line diagram displays. For the Ethernet and IRIG-B failure pages to work, these functions also have been enabled under **Settings > Product Setup > User-Programmable Self Tests**. For the breaker trouble, the single-line diagram has been configured.

Figure 4-45: Navigation editor

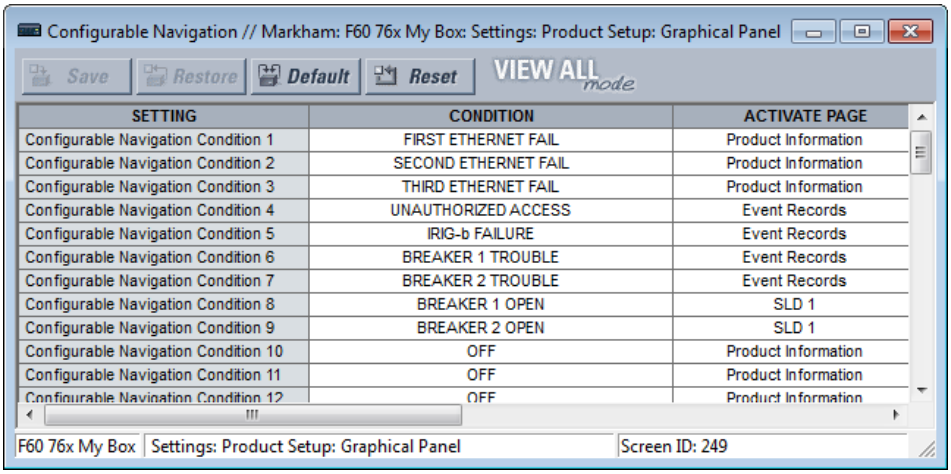

SETTING	CONDITION	ACTIVATE PAGE
Configurable Navigation Condition 1	FIRST ETHERNET FAIL	Product Information
Configurable Navigation Condition 2	SECOND ETHERNET FAIL	Product Information
Configurable Navigation Condition 3	THIRD ETHERNET FAIL	Product Information
Configurable Navigation Condition 4	UNAUTHORIZED ACCESS	Event Records
Configurable Navigation Condition 5	IRIG-b FAILURE	Event Records
Configurable Navigation Condition 6	BREAKER 1 TROUBLE	Event Records
Configurable Navigation Condition 7	BREAKER 2 TROUBLE	Event Records
Configurable Navigation Condition 8	BREAKER 1 OPEN	SLD 1
Configurable Navigation Condition 9	BREAKER 2 OPEN	SLD 1
Configurable Navigation Condition 10	OFF	Product Information
Configurable Navigation Condition 11	OFF	Product Information
Configurable Navigation Condition 12	OFF	Product Information

The path is **Settings > Product Setup > Graphical Panel > Configurable Navigation**.

The settings consist of 64 field pairs, each with a condition and an activation page. The condition selects any FlexLogic operand. The activation page selection is the standard set, such as product information, event records, annunciator pages, and single-line diagrams.

To use the feature, select a **CONDITION**, select its **ACTIVATE PAGE** option, then save. When selecting the condition operand, open the drop-down list and start typing in the field to auto-fill. For example, typing F displays FIRST ETHERNET FAIL.

The following buttons display at the top of the window:

- **Save** — Updates the connected device if online or the open setting file if offline with changes made
- **Restore** — Undoes changes that have not been saved
- **Default** — Changes all settings in the window to factory default values
- **Reset** — Displays factory default values. Previous settings are not lost unless you save the reset window.

4.2.3 Front panel navigation keys

4.2.3.1 Enhanced and basic front panels

Display messages are organized into pages under the following headings: actual values, settings, commands, and targets. The **MENU** key navigates through these pages. Each heading page is divided further into further submenus.

The **MESSAGE** keys navigate through the submenus. The **VALUE** keys increment or decrement numerical setting values when in programming mode. These keys also scroll through alphanumeric values in the text edit mode. Alternatively, values can be entered with the numeric keypad.

The decimal key initiates and advances to the next character in text edit mode or enters a decimal point.

The **HELP** key can be pressed at any time for context-sensitive help messages.

The **ENTER** key stores setting values.

When entering an IP address on the front panel, key in the first sequence of the number, then press the • key for the decimal place. For example, for 127.0.0.1, press 127, then •, then 0, then •, then 0, then •, then 1. To save the address, press the **ENTER** key.

The figure shows the sequence to use to enter a setting. Subsequent sections provide more detail.

Figure 4-46: Front panel keypad use (basic front panel shown)

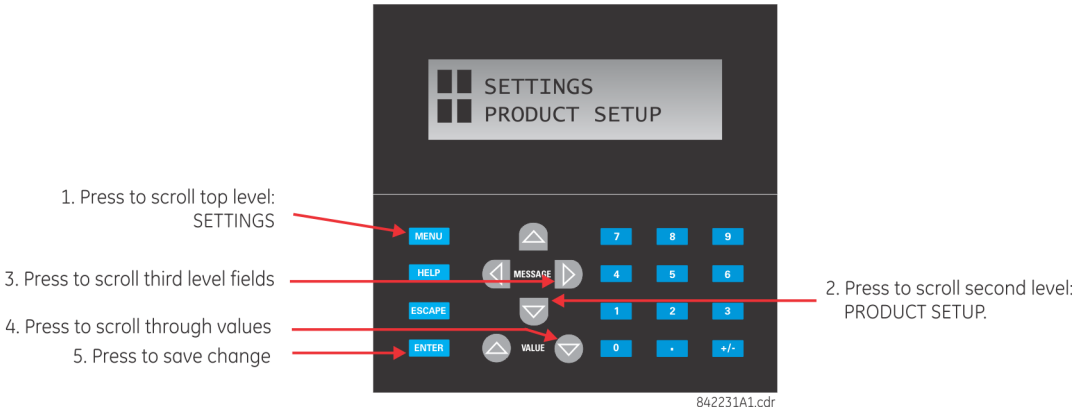

4.2.3.2 Graphical front panel

These keys and pushbuttons navigate and select items.

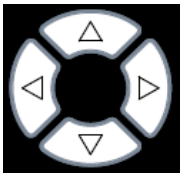

Up/Down/Left/Right — These pushbuttons move the selector among the options on a page. The selection is indicated by a yellow background or a yellow border. On menu pages, the Right pushbutton activates the selected submenu drilling down the menu hierarchy, and the Left pushbutton backs up the menu hierarchy. These pushbuttons have a typematic feature on some pages: after a short pause, the pushbutton repeats as long as it is pressed.

ENTER — Activates the selection on the display, for example a submenu, a control, a keypad key, or a setting. Also stores updated settings.

ESCAPE — If a setting is open for edit, this pushbutton closes the setting without saving. If a popup menu is open, this pushbutton closes it. If an item is selected, this pushbutton deselects it. Otherwise this pushbutton activates the previous page in the page hierarchy.

RESET — Clears all latched LED indications and target messages. When a page with acknowledgeable/resettable items is displayed, it instead resets/acknowledges all items on that page, or if an item on that page is selected, it resets/acknowledges that item.
If you reset/acknowledge alarms, they stop flashing but remain in the alarm state as long as that state remains. In other words, a red alarm does not switch off just because you acknowledged the alarm.

Home — Activates the home page, which is the root page. The page displays product information by default and is configurable.

Side pushbutton — Five pushbuttons on the left side of the display and five pushbuttons on the right side of the display. They perform various functions depending on the displayed page, such as switchgear controls. The display dynamically shows its label next to each side pushbutton when the pushbutton has an assigned function. These pushbuttons can also be programmed to function as user-programmable pushbuttons 9 to 16.

Tab pushbutton — Five pushbuttons under the display. They navigate through the page hierarchy, and on some pages activate other actions. The display footer dynamically labels the page or action that is activated by the Tab pushbutton.

User-programmable pushbutton — Eight physical pushbuttons are associated with the first eight user-programmable pushbutton elements. Numbering is down, that is, 1 to 4 down the left column and 5 to 8 down the right column.
These elements control a set of FlexLogic operands that can be used to initiate outputs or select modes. Each physical pushbutton has an integrated LED indicator that can be user-configured to display the appropriate status.
These pushbuttons have clear covers behind which custom labels can be mounted. A utility is available to print the labels, under **File > Front Panel Report** in the software.

4.2.4 LED indicators

4.2.4.1 Enhanced front panel

The enhanced front panel display provides five columns of LED indicators. The first column contains 14 status and event-cause LEDs. The next four columns contain the 48 user-programmable LEDs.

The **RESET** key is used to reset any latched LED indicator or target message, once the condition has been cleared (these latched conditions can also be reset via the **SETTINGS** ⇨⇩ **INPUT/OUTPUTS** ⇨⇩ **RESETTING** menu).

The **USER** keys are used by the breaker control feature.

Figure 4-47: Typical LED panel for enhanced front panel

842811A1.CDR

The status indicators in the first column are as follows:

- **IN SERVICE** — Indicates that control power is applied, all monitored inputs/outputs and internal systems are fine, and the relay is in (online) Programmed mode (under **Settings > Product Setup > Installation**)
- **TROUBLE** — Indicates that the relay has detected an internal problem. Check the self-test messages outlined at the end of the Commands and Targets chapter, and view the event records under **Actual Values > Records**. For a beta / pre-release, this LED is always on.
- **TEST MODE** — Indicates that the relay is in test mode. For information, see the Test Mode section in the Settings chapter.
- **TRIP** — Indicates that the selected FlexLogic operand serving as a trip input has operated. Set the operand under **Settings > Product Setup > User-Programmable LEDs > Trip & Alarm LEDs**. This indicator latches; initiate the reset command to reset the latch.
- **ALARM** — Indicates that the FlexLogic operand serving as an alarm switch has operated. Set the operand under **Settings > Product Setup > User-Programmable LEDs > Trip & Alarm LEDs**. This indicator never latches.
- **PICKUP** — Indicates that an element is picked up. This indicator never latches.

The event-cause indicators in the first column are as follows.

Event-cause LEDs are below the status LEDs. They are turned on or off by protection elements that have their respective target setting selected as either "Enabled" or "Latched." If a protection element target setting is "Enabled," then the corresponding event-cause LEDs remain on as long as the operand associated with the element remains asserted. If a

protection element target setting is "Latched," then the corresponding event-cause LEDs turn on when the operate operand associated with the element is asserted and remains on until the **RESET** button on the front panel is pressed after the operand is reset.

All elements that are able to discriminate faulted phases can independently turn off or on the phase A, B, or C LEDs. This includes phase instantaneous overcurrent, phase undervoltage, and so on. This means that the phase A, B, and C operate operands for individual protection elements are ORed to turn on or off the phase A, B, or C LEDs.

- **VOLTAGE** — This LED indicates voltage was involved
- **CURRENT** — This LED indicates current was involved
- **FREQUENCY** — This LED indicates frequency was involved
- **OTHER** — This LED indicates a composite function that is not solely current, voltage, or frequency based (distance or power for example) or a control function (digital element or trip bus for example)
- **PHASE A** — This LED indicates phase A was involved
- **PHASE B** — This LED indicates phase B was involved
- **PHASE C** — This LED indicates phase C was involved
- **NEUTRAL/GROUND** — This LED indicates that neutral or ground was involved

The user-programmable LEDs consist of 48 amber LED indicators in four columns. The operation of these LEDs is user-defined. Support for applying a customized label beside every LED is provided. Default labels are shipped in the label package of every L90, together with custom templates. The default labels can be replaced by user-printed labels.

User customization of LED operation is of maximum benefit in installations where languages other than English are used to communicate with operators. See the User-Programmable LEDs section in chapter 5 for the settings used to program the operation of the LEDs on these panels.

4.2.4.2 Basic front panel

The basic front panel consists of three panels with LED indicators, keys, and a communications port. The **RESET** key is used to reset any latched LED indicator or target message, once the condition has been cleared (these latched conditions can also be reset via the **SETTINGS** ⇨⇩ **INPUT/OUTPUTS** ⇨⇩ **RESETTING** menu). The RS232 port is for connection to a computer.

The **USER** keys are used by the breaker control feature.

Figure 4-48: LED panel 1

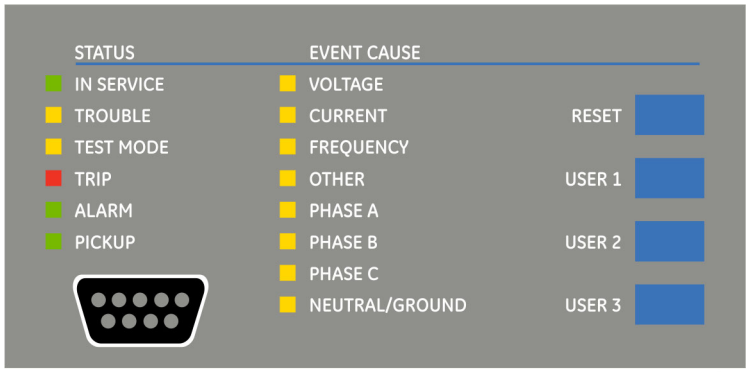

842781A1.CDR

Status indicators

- **IN SERVICE** — Indicates that control power is applied, all monitored inputs/outputs and internal systems are fine, and the relay is in (online) Programmed mode (under **Settings > Product Setup > Installation**)
- **TROUBLE** — Indicates that the relay has detected an internal problem. Check the self-test messages outlined at the end of the Commands and Targets chapter, and view the event records under **Actual Values > Records**. For a beta / pre-release, this LED is always on.

- **TEST MODE** — Indicates that the relay is in test mode. For information, see the Test Mode section in the Settings chapter.
- **TRIP** — Indicates that the selected FlexLogic operand serving as a trip switch has operated. This indicator always latches; initiate the reset command to reset the latch.
- **ALARM** — Indicates that the selected FlexLogic operand serving as an alarm switch has operated. This indicator never latches.
- **PICKUP** — Indicates that an element is picked up. This indicator never latches.

Event-cause indicators

Event-cause LEDs are turned on or off by protection elements that have their respective target setting selected as either "Enabled" or "Latched." If a protection element target setting is "Enabled," then the corresponding event cause LEDs remain on as long as the operand associated with the element remains asserted. If a protection element target setting is "Latched," then the corresponding event cause LEDs turn on when the operate operand associated with the element is asserted and remains on until the **RESET** button on the front panel is pressed after the operand is reset.

All elements that are able to discriminate faulted phases can independently turn off or on the phase A, B, or C LEDs. This includes phase instantaneous overcurrent, phase undervoltage, and so on. This means that the phase A, B, and C operate operands for individual protection elements are ORed to turn on or off the phase A, B, or C LEDs.

- **VOLTAGE** — Indicates voltage was involved
- **CURRENT** — Indicates current was involved
- **FREQUENCY** — Indicates frequency was involved
- **OTHER** — Indicates a composite function that is not solely current, voltage, or frequency based (distance or power for example) or a control function (digital element or trip bus for example)
- **PHASE A** — Indicates phase A was involved
- **PHASE B** — Indicates phase B was involved
- **PHASE C** — Indicates phase C was involved
- **NEUTRAL/GROUND** — Indicates that neutral or ground was involved

User-programmable indicators

The second and third panels provide 48 amber LED indicators whose operation is controlled by the user. Custom labelling can be done.

User customization of LED operation is of maximum benefit in installations where languages other than English are used to communicate with operators. See the User-programmable LEDs section in chapter 5 for the settings used to program the operation of the LEDs on these panels.

Figure 4-49: LED panels 2 and 3 (index template)

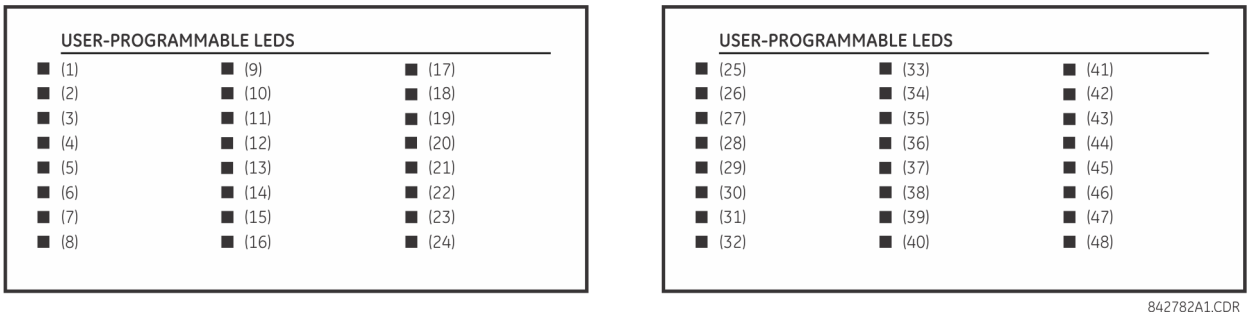

Default labels for LED panel 2

The default labels are intended to represent the following:

- **GROUP 1...6** — The illuminated GROUP is the active settings group

- **BREAKER 1(2) OPEN** — The breaker is open
- **BREAKER 1(2) CLOSED** — The breaker is closed
- **BREAKER 1(2) TROUBLE** — A problem related to the breaker has been detected
- **SYNCHROCHECK NO1(10) IN-SYNCH** — Voltages have satisfied the synchrocheck element
- **RECLOSE ENABLED** — The recloser is operational
- **RECLOSE DISABLED** — The recloser is not operational
- **RECLOSE IN PROGRESS** — A reclose operation is in progress
- **RECLOSE LOCKED OUT** — The recloser is not operational and requires a reset

NOTE Firmware revisions 2.9x and earlier support eight user setting groups; revisions 3.0x and higher support six setting groups. For convenience of users using earlier firmware revisions, the relay panel shows eight setting groups. Even though the LEDs have default labels, they are fully user-programmable.

The relay is shipped with the default label for the LED panel 2. The LEDs, however, are not pre-programmed. To match the pre-printed label, the LED settings must be entered as shown in the User-programmable LEDs section of chapter 5. The LEDs are fully user-programmable. The default labels can be replaced by user-printed labels for both panels as explained in the next section.

Figure 4-50: LED panel 2 (default labels)

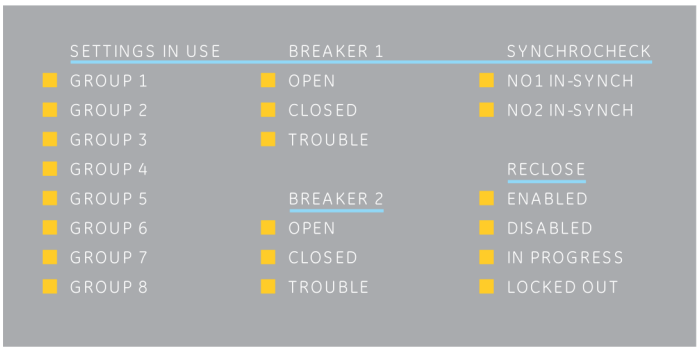

842784A1.CDR

4.2.4.3 Graphical front panel

The graphical front panel has 14 LEDs. LEDs 1 to 5 are fixed status LEDs, and LEDs 6 to 14 are programmable.

Status indicators

- **IN SERVICE** — Indicates that control power is applied, all monitored inputs/outputs and internal systems are fine, the relay's test mode is disabled, and the relay is in (online) Programmed mode (under **Settings > Product Setup > Installation**)
- **TROUBLE** — Indicates that the relay has detected an internal problem. Check the self-test messages outlined at the end of the Commands and Targets chapter, and view the event records under **Actual Values > Records**. For a beta / pre-release, this LED is always on.
- **TEST MODE** — Indicates that the relay is in Test-Blocked (solid) or Test (flashing) mode. For information, see the Testing section in the Settings chapter.
- **TRIP** — Indicates that the selected FlexLogic operand serving as a trip input has operated. Set the operand under **Settings > Product Setup > User-Programmable LEDs > Trip & Alarm LEDs**. This indicator latches; initiate the reset command to reset the latch.
- **ALARM** — Indicates that the selected FlexLogic operand serving as an alarm input has operated. Set the operand under **Settings > Product Setup > User-Programmable LEDs > Trip & Alarm LEDs**.

Figure 4-51: Example of LEDs on graphical front panel

User-programmable event-cause indicators

Event-cause LEDs are below the status LEDs. They are turned on or off by protection elements that have their respective target setting selected as "Self-Reset" or "Latched." If set to "Self-Reset," then the corresponding event cause LED remains on as long as the operand associated with the element remains asserted. If set to "Latched" and asserted, then it remains on until the operand is reset and then a reset command initiated.

All elements that are able to discriminate faulted phases can independently turn on or off the phase A, B, or C LEDs. This includes phase instantaneous overcurrent, phase undervoltage, and so on. This means that the phase A, B, and C operate operands for individual protection elements are ORed to turn on or off the phase A, B, or C LEDs.

The LEDs have defaults and can be configured to show instead the status of any FlexLogic operand.

The labelling area has a clear cover for custom labels. A utility is available to print stick-on labels, as outlined later in this chapter.

These LEDs are programmed by default as follows:

- **PICKUP — LED 6** — Indicates that an element is picked up, and hence a trip can be imminent
- **VOLTAGE — LED 7** — Indicates voltage was involved
- **CURRENT — LED 8** — Indicates current was involved
- **FREQUENCY — LED 9** — Indicates frequency was involved
- **OTHER — LED 10** — Indicates a composite function that is not solely current, voltage, or frequency based (distance or power for example) or a control function (digital element or trip bus for example)
- **PHASE A — LED 11** — Indicates phase A was involved
- **PHASE B — LED 12** — Indicates phase B was involved
- **PHASE C — LED 13** — Indicates phase C was involved
- **NEUTRAL/GROUND — LED 14** — Indicates that neutral or ground was involved

4.2.5 Front panel labelling

4.2.5.1 Enhanced front panel

The following procedure requires these pre-requisites:

- The UR front panel label cutout sheet (GE part number 1006-0047) has been downloaded from http://www.gegridsolutions.com/products/support/ur/URLEDenhanced.doc and printed
- Small-bladed knife

To create custom LED and pushbuttons labels for the enhanced front panel:

1. Start the EnerVista UR Setup software.

2. If not already copied to the Offline Window area, right-click the online device and select the **Add Device to Offline Window** option. Click the **Receive** button in the window that opens to save the settings file to the Offline Window area.
3. Type labels as follows. Select the **File > Front Panel Report**. The window opens.

Figure 4-52: Enhanced front panel label designer

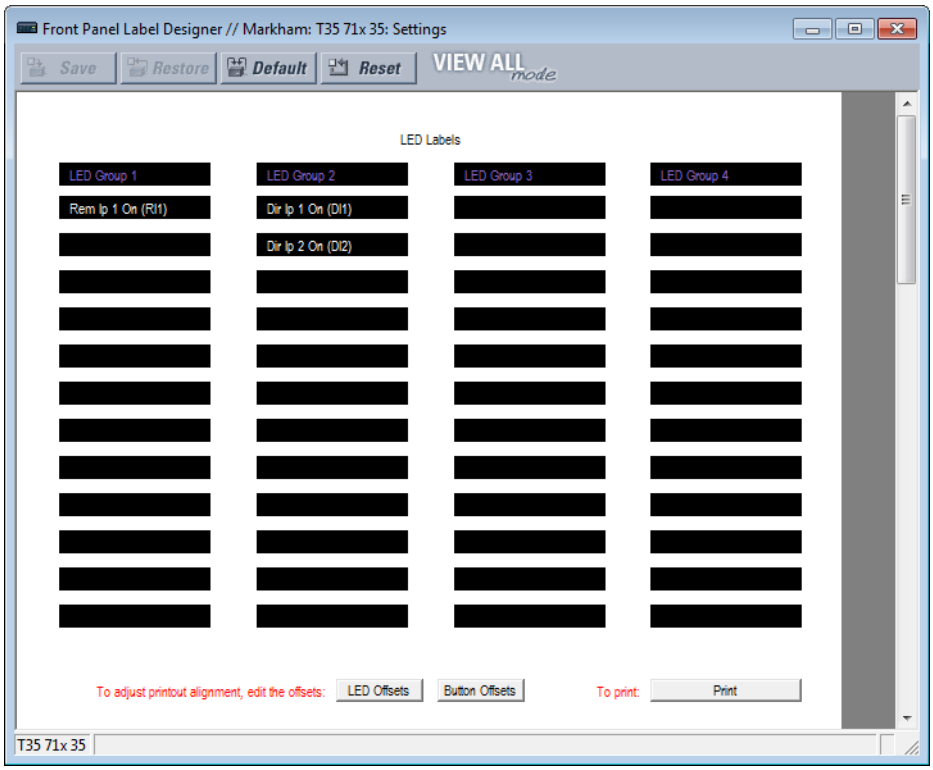

4. Enter the text to appear next to each LED and above each user-programmable pushbutton in the fields provided. The **LED Offsets** and **Button Offsets** buttons move all labels left/right and up/down on the page (they both do the same action, so use either button). The **Button Offsets** button does not display when there are no pushbuttons to customize.
5. Feed the UR front panel label cutout sheet into a printer and press the **Print** button in the front panel report window.
6. When printing is complete, fold the sheet along the perforated lines and punch out the labels.
7. Remove the UR label insert tool from the package and bend the tabs as described in the following procedures. These tabs are used for removal of the default and custom LED labels.

NOTE

Use the tool with the printed side containing the GE part number facing the user.

The label package shipped with every L90 contains the three default labels, the custom label template sheet, and the label removal tool.

If the default labels are suitable for your application, insert them in the appropriate slots and program the LEDs to match them. If you require custom labels, use the following procedures to remove the original labels and insert the new ones.

To set up and use the label removal tool:

1. Bend the tabs at the left end of the tool upwards as shown.

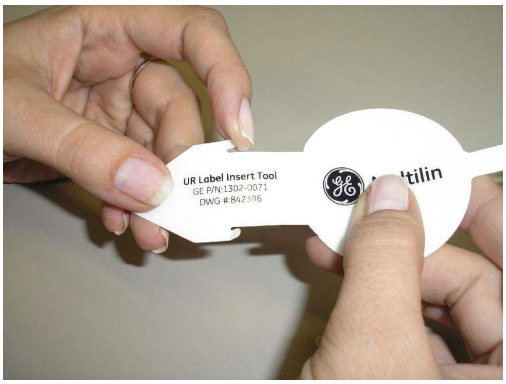

Bend the tab at the center of the tool tail as shown.

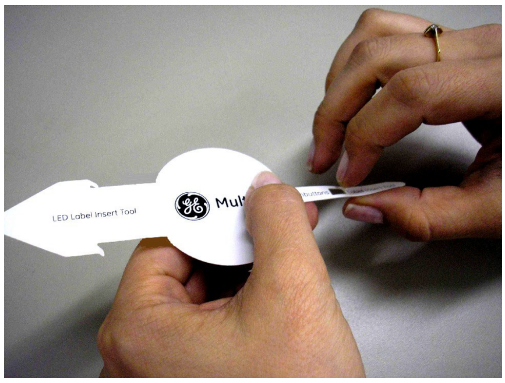

To remove the LED labels from the L90 front panel and insert the custom labels:

1. Use the knife to lift the LED label and slide the label tool underneath. Ensure that the bent tabs are pointing away from the relay.

2. Slide the label tool under the LED label until the tabs snap out as shown. This attaches the label tool to the LED label.

3. Remove the tool and attached LED label as shown.

4. Slide the new LED label inside the pocket until the text is properly aligned with the LEDs, as shown.

To remove the user-programmable pushbutton labels from the L90 front panel and insert the custom labels:

1. Use the knife to lift the pushbutton label and slide the tail of the label tool underneath, as shown. Ensure that the bent

tab points away from the relay.

2. Slide the label tool under the user-programmable pushbutton label until the tabs snap out as shown. This attaches the label tool to the user-programmable pushbutton label.

3. Remove the tool and attached user-programmable pushbutton label.

4. Slide the new user-programmable pushbutton label inside the pocket until the text is properly aligned with the

buttons.

4

4.2.5.2 Basic front panel

After programming LEDs and pushbuttons under **Settings > Product Setup > User-Programmable Leds** and **User-Programmable Pushbuttons**, labels can be created for the front panel.

To create LED and pushbutton labels for a basic front panel:

1. In the EnerVista software, if the L90 is not already listed in the Offline Window area, add it by right-clicking it and selecting the **Add Device to Offline Window** option.
2. Click the **File > Front Panel Report** menu item and select the device.
3. In the Front Panel Report window, double-click an LED or pushbutton slot and type a label. If you need to see the existing front panel remotely, access **Actual Values > Front Panel** for the online device. If you need to see the In the figure, note that labelling is being done for the third set of LEDs because the second panel of LEDs was factory-labelled.

Figure 4-53: Basic front panel label designer (LEDs shown)

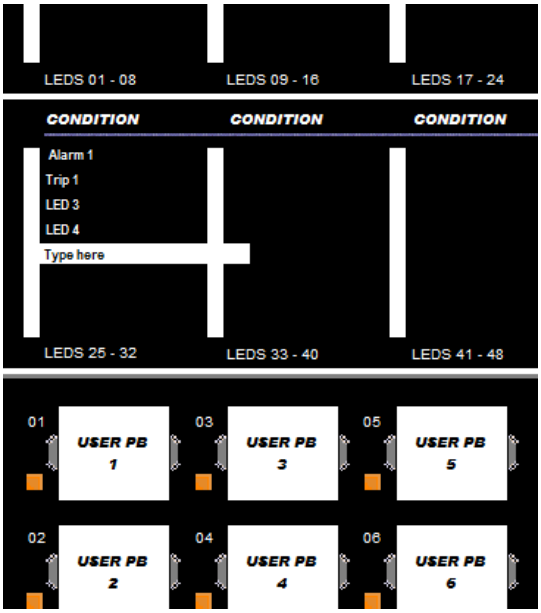

4. Optionally save the changes by clicking the **Save** icon on the toolbar.
5. Click the **Print** icon on the toolbar. Consider printing to PDF format and adjusting the zoom for appropriate label size, then print on a physical printer.
6. Cut labels as a block or individually, for example with scissors or an Exacto knife.
7. If there is a plastic cover over the front panel, remove it by gently pushing in on the right side and lifting off the cover.
8. Remove the plastic cover over the LEDs or pushbutton(s) using a screw driver.
9. Insert the labels.
10. Re-attach the plastic covers.

4.2.5.3 Graphical front panel

The L90 includes software for labelling the LEDs and pushbuttons on the graphical front panel and a sticker sheet with pre-printed and blank labels. The pre-printed labels are on the top-left of the template sheet, and the blank labels are on the bottom-right. Use the pre-printed labels, or use the designer provided in the software and print labels onto the template. One sheet is provided.

The example shows LED labeling, wjth pushbutton labeling below it (cut off).

To create LED and pushbutton labels for the front panel:

1. In the EnerVista software, in the Online or Offline Window area, access **Settings > Front Panel Label Designer** or **Front Panel Label Designer** (at the product root level). The designer window opens with pre-configured labels.
2. Under **File > Print Setup**, change the page orientation to **Landscape**.
3. In the label designer window, delete all labels not wanted for printing. This can be done by clicking the **Reset** button to clear all labels, or by selecting each unwanted label and deleting it. Otherwise, all labels displayed print on the template and use up the template. If you make a mistake, exit the window and open it again to view the default labels.
4. Based on the location on the template on which to print, create the labels by typing in the appropriate slots.

Figure 4-54: Front panel label designer for graphical front panel

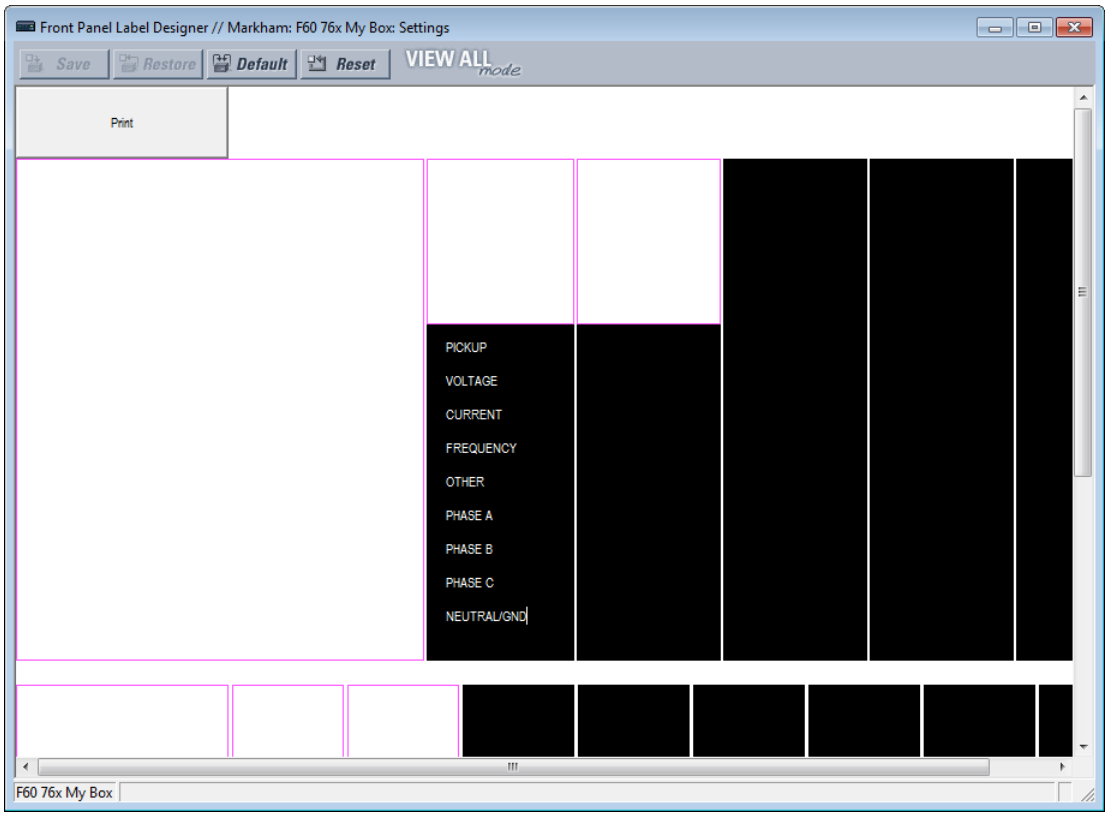

5. Click the **Print** button in the window and select the printer.
6. Once printed, peel the labels off the template and stick them on the front panel. For the enhanced and graphical front panels, they go over the clear plastic inserts, not under. For the basic front panel, they go under or over the plastic covers.

Any changes are not saved. Each time that the label designer window opens, the original template displays. Any labels deleted are not lost.

4.2.6 Menu navigation

Press the **MENU** key to display selections or home page. Each press of the key advances through the following main headings:

- Actual Values
- Settings
- Commands
- Targets
- Factory Service
- User displays (when enabled)

4.2.6.1 Enhanced and basic front panels

The setting and actual value pages are arranged hierarchically. Header display pages are indicated by double scroll bars (■■), while sub-header pages are indicated by a single scroll bar (■). The header display pages represent the highest level of the hierarchy and the sub-header display pages fall below this level. Use the down, right, left, and up arrows to navigate the menu. The **MESSAGE** up and down arrow keys move within a group of headers, sub-headers, setting values, or actual

values. Continually pressing the **MESSAGE** right arrow from a header display displays specific information for the category. Conversely, continually pressing the **MESSAGE** left arrow from a setting value or actual value display returns to the header display.

Default values are indicated in this instruction manual in mixed case. In the example shown here, the default access level is Restricted.

Highest level **Lowest level (setting value)**

```
■■ SETTINGS        ⇔  ■ SECURITY        ⇔  ACCESS LEVEL:
■■ PRODUCT SETUP      ■                    Restricted
        ⇕
■■ SETTINGS
■■ SYSTEM SETUP
```

Example

■■ ACTUAL VALUES ■■ STATUS	Press the **MENU** key until the Actual Values header page appears. This page contains system and relay status information.
⇩	
■■ SETTINGS ■■ PRODUCT SETUP	Press the **MENU** key until the Settings header page appears. This category contains settings to configure the relay.
⇩	
■ SECURITY ■	Press the **MESSAGE** right arrow once to display the first sub-header (Security).
⇩	
ACCESS LEVEL: Restricted	Press the **MESSAGE** right arrow once to display the first setting for Security.
⇩	
■ SECURITY ■	Press the **MESSAGE** left arrow to return to the Security heading.
⇩	
■ DISPLAY ■ PROPERTIES	Press the **MESSAGE** down arrow to display the second setting sub-header associated with the Product Setup header.
⇩	
LANGUAGE: English	Press the **MESSAGE** right arrow once to display the first setting for Display Properties.
⇩	
■■ SETTINGS ■■ SYSTEM SETUP	Press the **MESSAGE** left arrow to return to the Display Properties page, then again to return to the Product Setup Page. Press the **MESSAGE** down arrow to move to the next Settings page. This page contains settings for System Setup.

4.2.6.2 Graphical front panel

Access the main menu by pressing the **Home** pushbutton, then the **Menu** Tab pushbutton.

Use the Up and Down arrow pushbuttons to select a submenu, then press the Right or **ENTER** pushbutton to drill into that submenu. The Left and **ESCAPE** pushbuttons back up the menu hierarchy.

The **Page Up** and **Page Down** Tab pushbuttons also navigate through the list. When there is only a single page of options, they jump to the first and last entries.

The options displayed depend on order code.

Figure 4-55: Main menu on graphical front panel

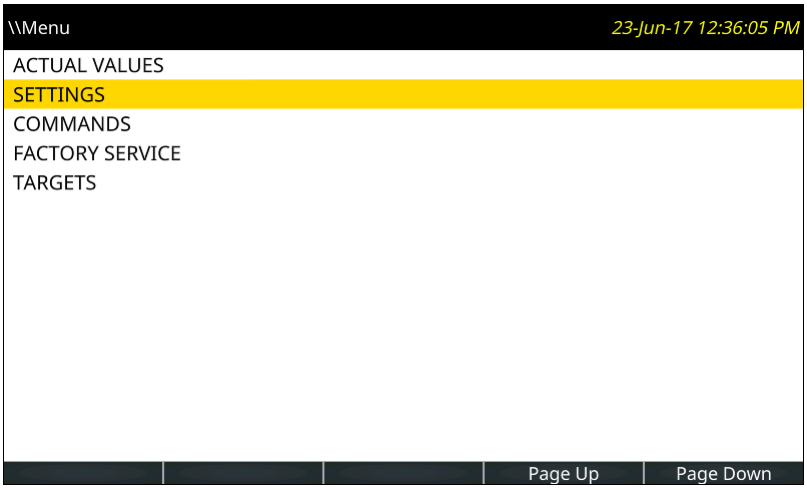

4

4.2.7 Change settings

4.2.7.1 Enhanced and basic front panels

Numerical data

Each numerical setting has its own minimum, maximum, and increment value associated with it. These parameters define what values are acceptable for a setting.

FLASH MESSAGE **TIME: 10.0 s**	For example, select the **SETTINGS** ⇨ **PRODUCT SETUP** ⇨⇩ **DISPLAY PROPERTIES** ⇨⇩ **FLASH MESSAGE TIME** setting.
⇩	
MINIMUM: 0.5 **MAXIMUM: 10.0**	Press the **HELP** key to view the minimum and maximum values. Press the key again to view the next context sensitive help message.

Two methods of editing and storing a numerical setting value are available.

- **0 to 9 and decimal point** — The relay numeric keypad works the same as a calculator. A number is entered one digit at a time. The leftmost digit is entered first and the rightmost digit is entered last. Pressing the **MESSAGE** left arrow or pressing the **ESCAPE** key, returns the original value to the display.
- **VALUE keys** — The **VALUE** up arrow increments the displayed value by the step value, up to the maximum value allowed. While at the maximum value, pressing the **VALUE** up arrow again allows the setting selection to continue upward from the minimum value. The **VALUE** down arrow decrements the displayed value by the step value, down to the minimum value. While at the minimum value, pressing the **VALUE** down arrow again allows the setting selection to continue downward from the maximum value.

FLASH MESSAGE **TIME: 2.5 s**	As an example, set the flash message time setting to 2.5 seconds. Press the appropriate numeric keys in the sequence "2 . 5". The display message changes as the digits are being entered.
⇩	
NEW SETTING **HAS BEEN STORED**	Until **ENTER** is pressed, editing changes are not registered by the relay. Press **ENTER** to store the new value in memory. This flash message momentarily appears as confirmation of the storing process. Numerical values that contain decimal places are rounded-off if more decimal place digits are entered than specified by the step value.

Enumeration data

Enumeration settings have data values that are part of a set, whose members are explicitly defined by a name. A set has two or more members.

ACCESS LEVEL: **Restricted**	For example, the selections available for **ACCESS LEVEL** are "Restricted," "Command," "Setting," and "Factory Service."

Enumeration type values are changed using the **VALUE** keys. The **VALUE** up arrow displays the next selection while the **VALUE** down arrow displays the previous selection.

ACCESS LEVEL: **Setting**	If the **ACCESS LEVEL** needs to be "Setting," press the **VALUE** keys until the proper selection displays. Press **HELP** at any time for the context sensitive help messages.
⇩	
NEW SETTING **HAS BEEN STORED**	Changes are not registered by the relay until the **ENTER** key is pressed. Pressing **ENTER** stores the new value in memory. This flash message momentarily appears as confirmation.

Alphanumeric text

Text settings have data values that are fixed in length, but user-defined in characters. They can be upper-case letters, lower-case letters, numerals, and a selection of special characters.

There are several places where text messages can be programmed to allow the relay to be customized for specific applications. One example is the Message Scratchpad. Use the following procedure to enter alphanumeric text messages.

For example, enter the text “Breaker #1”.

1. Press the decimal point to enter text edit mode.
2. Press the **VALUE** keys until the character 'B' appears; press the decimal key to advance the cursor to the next position.
3. Repeat step 2 for the remaining characters: r,e,a,k,e,r, ,#,1.
4. Press **ENTER** to store the text.
5. If you have any problem, press **HELP** to view context sensitive help. Flash messages appear sequentially for several seconds each. For the case of a text setting message, pressing **HELP** displays how to edit and store new values.

4.2.7.2 Graphical front panel

When enabling an element in the EnerVista software that outputs to an actual value, the actual values menu is not updated on the graphical front panel via Ethernet connection when that menu is active on the graphical front panel. Navigate out and back into the menu for activation.

Numerical data

This example outlines how to change the FLASH MESSAGE TIME setting. Flash messages are status, warning, error, and information messages displayed in response to certain key presses during settings programming. An example is a confirmation message upon saving settings. This setting specifies how long to display the message.

Press the **Menu** pushbutton to display the main menu.

Figure 4-56: Main menu

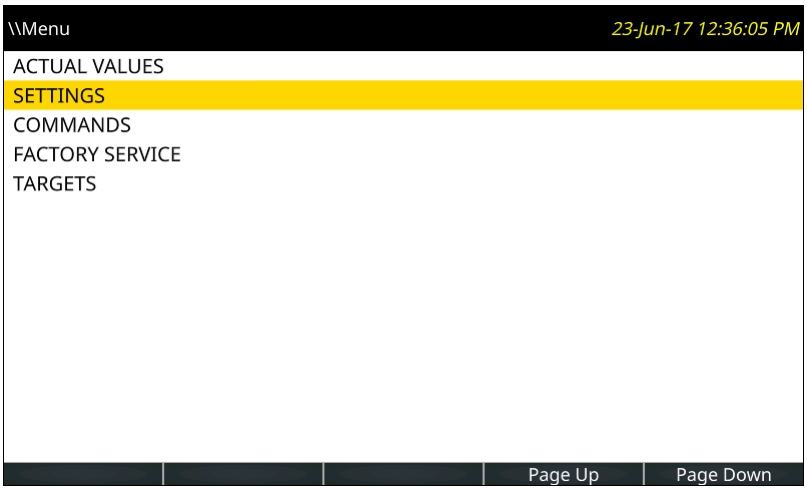

Use the Up or Down pushbutton to select **SETTINGS**, then press the Right or **ENTER** pushbutton.

Figure 4-57: Settings menu

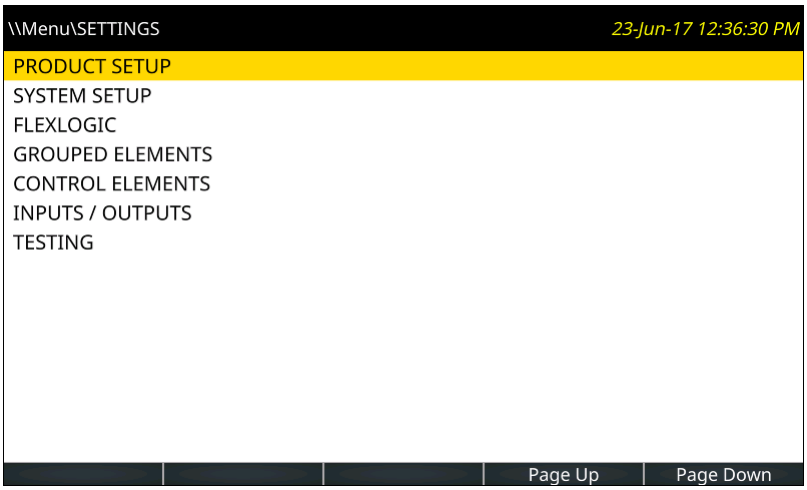

With **PRODUCT SETUP** selected, press the Right or **ENTER** pushbutton.

Figure 4-58: Product Setup menu

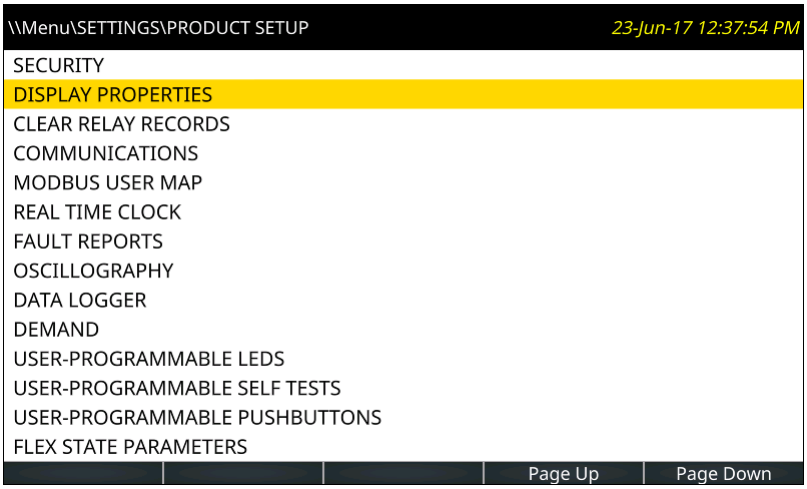

Use the Up or Down pushbutton to select **DISPLAY PROPERTIES**, then press the Right or **ENTER** pushbutton.

Figure 4-59: Display Properties menu

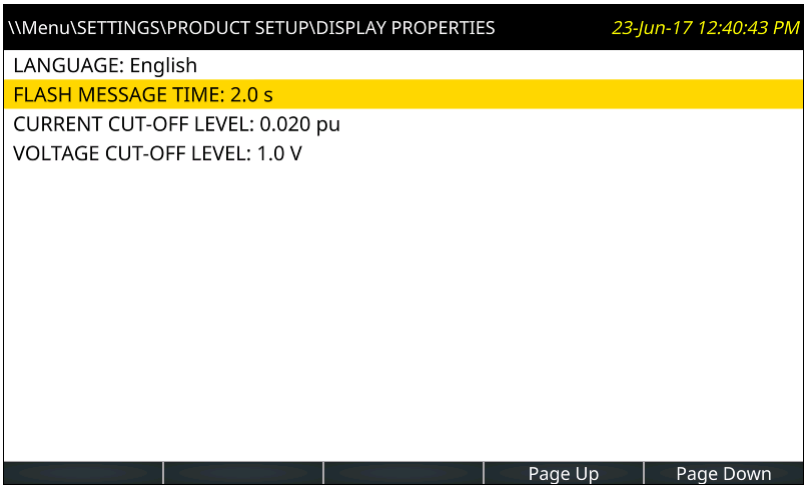

Use the Up or Down pushbutton to select **FLASH MESSAGE TIME**, then press the Right or **ENTER** pushbutton. If the relay is configured to require login to edit settings, and the user is not already logged in, the login page displays. When the user has successfully logged in, the setting is opened for edit. As the **FLASH MESSAGE TIME** setting accepts a numerical value, a keypad displays. The time is to be changed to 4.0 seconds.

The current setting displays. A flashing cursor line marks the insertion point, initially positioned after the last character of the setting. The setting range displays under the text.

Press the **<--** **Move Cursor** and **Move Cursor** **-->** Tab pushbuttons to move the insertion point. Place it after the 2.

Press the **Backspace** Tab pushbutton to remove the character to the left of the cursor, in this case the 2.

Using the arrow keys, enter another time, for example 4 for four seconds. These Up, Down, Left, and Right pushbuttons move the keypad key selector. Pressing the **ENTER** pushbutton with the **-** key selected inverts the sign. Pressing the **ENTER** pushbutton with the decimal point selected enters that character at the insertion point. Push **ENTER** now to accept the 4.

Figure 4-60: Settings page with numeric keypad

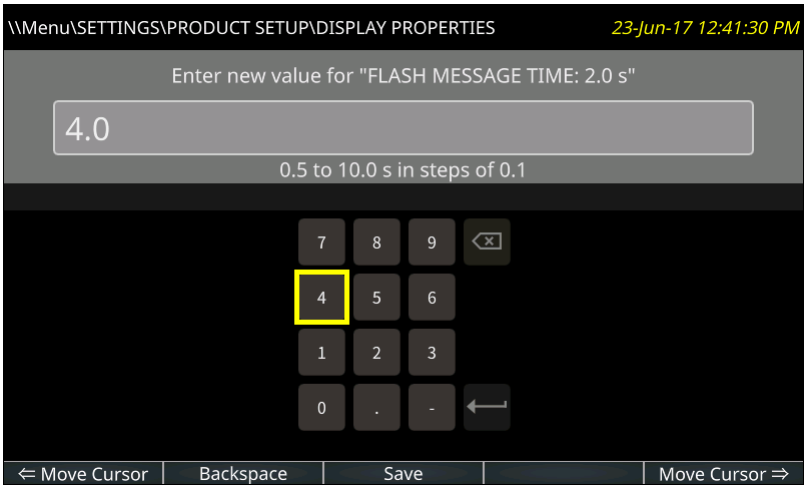

Press the **Save** Tab pushbutton, which does a range check on the value, saves the setting when valid, closes the page, and displays the previous page.

When a setting is not saved due to an invalid value, a message flashes, for example being out of range. In cases where the relay needs to be restarted for settings to take effect, the flash message advises.

Setting entry can be cancelled without impact on the original value by pressing the **ESCAPE** or **Home** pushbutton.

Alphanumeric text

Settings that accept alphanumeric values display a keyboard. An example is a pushbutton name.

The **&123** key toggles between text and numbers.

The shift key (up arrow on keyboard) is green upon activation, while the keyboard letters switch to upper case. Double-click the shift key to lock capital lettering, or full capitals.

The globe key (shown greyed-out) toggles the keyboard language between English and another display language selected, for example between English and French. (The second language needs to be activated under **Settings > Product Setup > Display Properties**.)

For Japanese and Chinese, up to 10 characters can be input in a field, not 20.

To add accents, highlight a key and hold the **ENTER** pushbutton on the graphical front panel. Any special characters associated with the key display.

To avoid conflict with XML programming, do not enter the following characters on the Annunciator and Metering editor panels: " (quotation mark), ' (apostrophe), < (less than), > (greater than), & (ampersand). When used, the text following the character does not display or the Annunciator and Metering panels do not display on the graphical front panel.

Figure 4-61: Settings page with keyboard and accents

4.2.8 View actual values

4.2.8.1 Graphical front panel

In addition to data viewable in the **Actual Values** menu on the front panel, phasor diagrams and metered data can be displayed. The metered data can be arranged as a table.

The update rate of metered values is 500 ms.

A phasor page for each configured AC Source and up to five user-configurable metering pages can be displayed. The phasor pages are not configurable. Each phasor page shows a phasor plot and numerical values of all currents, voltages, and symmetrical components of a single AC source.

The Annunciator and Metering pages can be configured to display data. Each has a user-configured number of rows and columns. Each cell can include either configurable static text or the value of a selected FlexLogic operand, FlexAnalog operand, or actual value.

To display a metering page, press the **Home** pushbutton, then the **Metering** Tab pushbutton. The first metering page opens, with phasor pages listed before tabular pages. The Tab pushbuttons display any other metering page, as do the Up, Down, Left and Right pushbuttons. The current page is highlighted with a blue Tab pushbutton.

Each phasor page has a name, which consists of the value of the SOURCE NAME # setting appended with " Phasors." Phasor pages that have no configured CTs or VTs do not have a Tab pushbutton, and phasor pages that have no configured cells cannot be displayed.

Figure 4-62: Phasor display

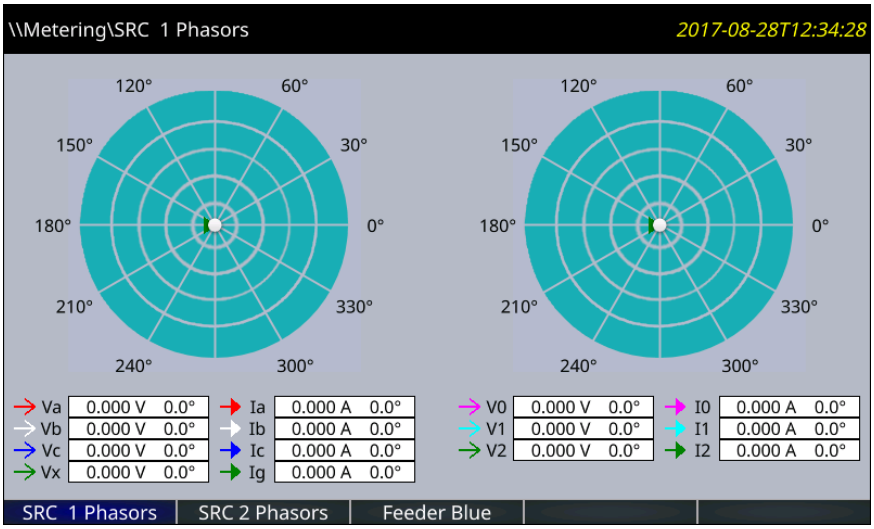

4

The configurable name displays in the header and Tab pushbutton label. Factory default names are Page 1, Page 2, and so on.

Figure 4-63: Metered actual values

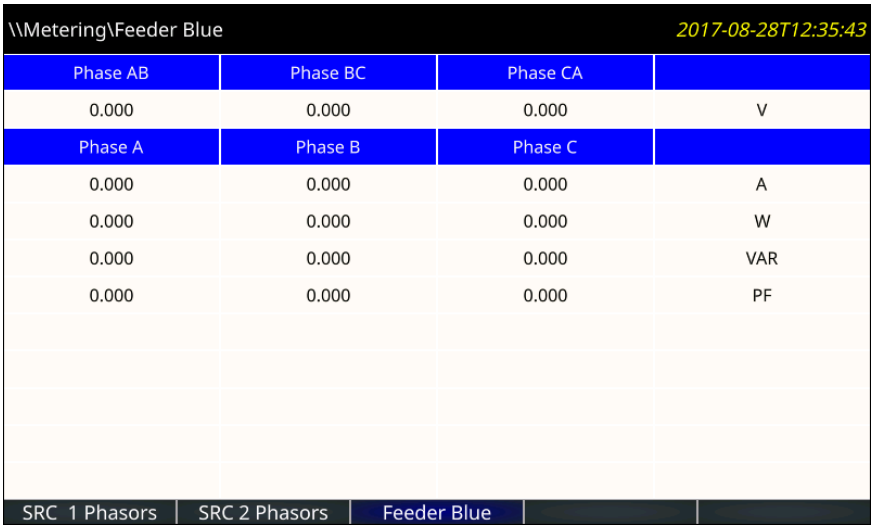

The phasor sources are configured under **Settings > System Setup > Signal Sources**. The tables to display the actual values are configured in the software under **Settings > Product Setup > Graphical Panel > Metering Editor**.

4.2.9 Breaker control

The L90 can interface with associated circuit breakers. In many cases the application monitors the state of the breaker, that can be presented on front panel LEDs, along with a breaker trouble indication. Breaker operations can be manually initiated from the front panel keypad or automatically initiated from a FlexLogic operand. A setting is provided to assign names to each breaker; this user-assigned name is for the display of related flash messages. These features are provided for two breakers; the user can use only those portions of the design relevant to a single breaker, which must be breaker 1.

It is assumed in the following discussion that the **SETTINGS** ⇨⇩ **SYSTEM SETUP** ⇨⇩ **BREAKERS** ⇨ **BREAKER 1(2)** ⇨ **BREAKER FUNCTION** setting is "Enabled" for each breaker.

4.2.9.1 Control mode selection and monitoring

Installations can require that a breaker be operated in the three-pole only mode (3-pole), or in the one and three-pole (1-pole) mode, selected by setting. If the mode is selected as three-pole, a single input tracks the breaker open or closed position. If the mode is selected as one-pole, all three breaker pole states must be input to the relay. These inputs must be in agreement to indicate the position of the breaker.

For the following discussion it is assumed that the **SETTINGS ⇨⇩ SYSTEM SETUP ⇨⇩ BREAKERS ⇨ BREAKER 1(2) ⇨⇩ BREAKER 1(2) PUSH BUTTON CONTROL** setting is "Enabled" for each breaker.

4.2.9.2 Front panel (user key) control

After the 30 minute interval during which command functions are permitted after a correct command password, the user cannot open or close a breaker via the keypad. The following discussions begin from the not-permitted state.

4.2.9.3 Control of two breakers

For the following setup example, the **(Name)** field represents the user-programmed variable name.

For this example, the relay is connected and programmed for both breaker 1 and breaker 2. The **USER 1** key performs the selection of which breaker is to be operated by the **USER 2** and **USER 3** keys. The **USER 2** key manually closes the breaker, and the **USER 3** key manually opens the breaker.

ENTER COMMAND PASSWORD	This message appears when the **USER 1**, **USER 2**, or **USER** 3 key is pressed and a **COMMAND PASSWORD** is required, that is, if **COMMAND PASSWORD** is enabled and no commands have been issued within the last 30 minutes.
Press USER 1 To Select Breaker	This message appears if the correct password is entered or if none is required. This message displays for 30 seconds or until the **USER 1** key is pressed again.
BKR1-(Name) SELECTED USER 2=CLS/USER 3=OP	This message displays after the **USER 1** key is pressed for the second time. Three possible actions can be performed from this state within 30 seconds as per the following items (1), (2) and (3).
(1) **USER 2 OFF/ON To Close BKR1-(Name)**	If the **USER 2** key is pressed, this message appears for 20 seconds. If the **USER 2** key is pressed again within that time, a signal is created that can be programmed to operate an output relay to close breaker 1.
(2) **USER 3 OFF/ON To Open BKR1-(Name)**	If the **USER 3** key is pressed, this message appears for 20 seconds. If the **USER 3** key is pressed again within that time, a signal is created that can be programmed to operate an output relay to open breaker 1.
(3) **BKR2-(Name) SELECTED USER 2=CLS/USER 3=OP**	If the **USER 1** key is pressed at this step, this message appears showing that a different breaker is selected. Three possible actions can be performed from this state as per (1), (2) and (3). Repeatedly pressing the **USER 1** key alternates between available breakers. Pressing keys other than **USER 1**, **2**, or **3** at any time cancels the breaker control function.

4.2.9.4 Control of one breaker

For this application, the relay is connected and programmed for breaker 1 only. Operation for this application is identical to that described in the previous section for two breakers.

4.2.10 Change passwords

The information in this section refers to password security. For information on how to set the password for the first time or change CyberSentry passwords, see the previous chapter or the Settings > Product Setup > Security > CyberSentry section in the next chapter.

The L90 supports password entry from a local or remote connection.

Local access is defined as access to settings or commands via the front panel. This includes both keypad entry and the RS232 port. Remote access is defined as access to settings or commands via any rear communications port. This includes both Ethernet and RS485 connections. Any change to the local or remote password enables this functionality.

When entering a settings or command password via EnerVista or any serial interface, the user must enter the corresponding connection password. If the connection is to the back of the L90, the remote password must be used. If the connection is to the RS232 port of the front panel, the local password must be used.

There are two user security access levels, setting and command, for which you can set a password for each. Use of a password for each level controls whether users can enter commands or change settings. Another option is to specify setting and/or command access for individual user accounts.

- **Setting** — Allows the user to make any changes to any of the setting values:
  - Changing any setting
  - Test mode operation
- **Command** — Restricts the user from making any settings changes, but allows the user to perform the following operations:
  - Operating the breakers via front panel keypad
  - Changing the state of virtual inputs
  - Clearing the event records
  - Clearing the oscillography records
  - Clearing fault reports
  - Changing the date and time
  - Clearing the breaker arcing current
  - Clearing energy records
  - Clearing the data logger
  - Clearing the user-programmable pushbutton states

To enter the initial setting or command password:

1. Press the **MENU** key until the **SETTINGS** header flashes momentarily and the **PRODUCT SETUP** message appears on the display.
2. Press the **MESSAGE** right arrow until the **ACCESS LEVEL** message appears on the display.
3. Press the **MESSAGE** down arrow until the **CHANGE LOCAL PASSWORDS** message appears on the display.
4. Press the **MESSAGE** right arrow until the **CHANGE SETTING PASSWORD** or **CHANGE COMMAND PASSWORD** message appears on the display.

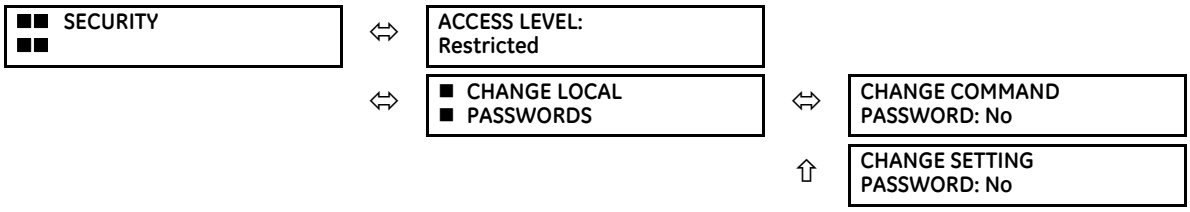

5. After the **CHANGE...PASSWORD** message appears on the display, press the **VALUE** up or down arrow to change the selection to "Yes."
6. Press the **ENTER** key and the display prompts you to **ENTER NEW PASSWORD**.
7. Type in a password and press the **ENTER** key.

8. When **VERIFY NEW PASSWORD** displays, re-type the password and press **ENTER**.

```
CHANGE SETTING
PASSWORD: No
```

```
CHANGE SETTING
PASSWORD: Yes
```

```
ENTER NEW
PASSWORD: ##########
```

```
VERIFY NEW
PASSWORD: ##########
```

```
NEW PASSWORD
HAS BEEN STORED
```

9. When the **NEW PASSWORD HAS BEEN STORED** message appears, your new Setting (or Command) password is active.

4.2.11 Invalid password entry

By default, when an incorrect Command or Setting password has been entered via the front panel three times within five minutes, the LOCAL ACCESS DENIED FlexLogic operand is set to "On" and the L90 does not allow settings or command level access via the front panel for five minutes.

By default, when an incorrect Command or Setting password has been entered via any external communications interface three times within five minutes, the REMOTE ACCESS DENIED FlexLogic operand is set to "On" and the L90 does not allow settings or command access via the any external communications interface for five minutes. The REMOTE ACCESS DENIED FlexLogic operand is set to "Off" after five minutes for a Command password or 30 minutes for a Settings password.

These default settings can be changed in EnerVista under **Settings > Product Setup > Security**.

4

4.3 Logic diagrams

Logic diagrams in this instruction manual provide an overview of function and settings. A logic diagram is based on

- Inputs-on the left side, which are setting and operands
- Logical gates, which is Boolean algebra to combine logical lines using AND, OR, NOT, and other gates to get a new logical state
- Logical operators, which are timers, one-shot operations, latches, and so on
- Outputs-on the right side, which are products of the manipulations with inputs, logical gates, and logical operators to produce new operands and define the output state of the element

True and false values are denoted by 1 and 0 respectively. A function usually is high/on/enabled when 1.

Reading from right to left in the following diagram, the TRIP BUS 1 OP and TRIP BUS 1 PKP FlexLogic operands on the right side are triggered when either the settings or reset latch in the middle of the diagram is triggered. When this applies, the TRIP BUS 1 OP operand is triggered after the delay set by the **TRIP BUS 1 PICKUP DELAY** or **TRIP BUS 1 RESET DELAY** setting, while the TRIP BUS 1 PKP operand initiates immediately. The settings or reset latch in the middle of the diagram is triggered as follows.

- For the reset, one of three conditions are required to meet the OR requirement shown at the bottom left. That is, the **TRIP BUS 1 LATCHING** setting must be 0=Disabled (which is negated by the NOT function to become 1=Enabled), output from the TRIP BUS 1 RESET FlexLogic operand must be 1, or output from the RESET OP FlexLogic operand must be 1.
- For the settings, one of 16 input conditions at the top left must be met for the OR, the **TRIP BUS 1 FUNCTION** must be Enabled, and the TRIP BUS 1 BLOCK output must output as 0, which is then negated/reversed by NOT to become 1.

Table 4-2: Logic diagram symbols

Symbol	Description
= Off	Output from FlexLogic operand, so user-defined
= Enabled	1 = Enabled and 0 = Disabled
OR	Any function input on the left side satisfies the condition
AND	All functions input on the left side are required to satisfy the condition

Symbol	Description
O	Not. Negates/reverses the output, for example 0 becomes 1.
●	Connection
S, R	Set, Reset
T_{PKP}	Timer pickup. Triggered by the settings latch in the diagram.
T_{RST}	Timer reset. Triggered by the reset latch in the diagram.

Figure 4-64: Logic diagram

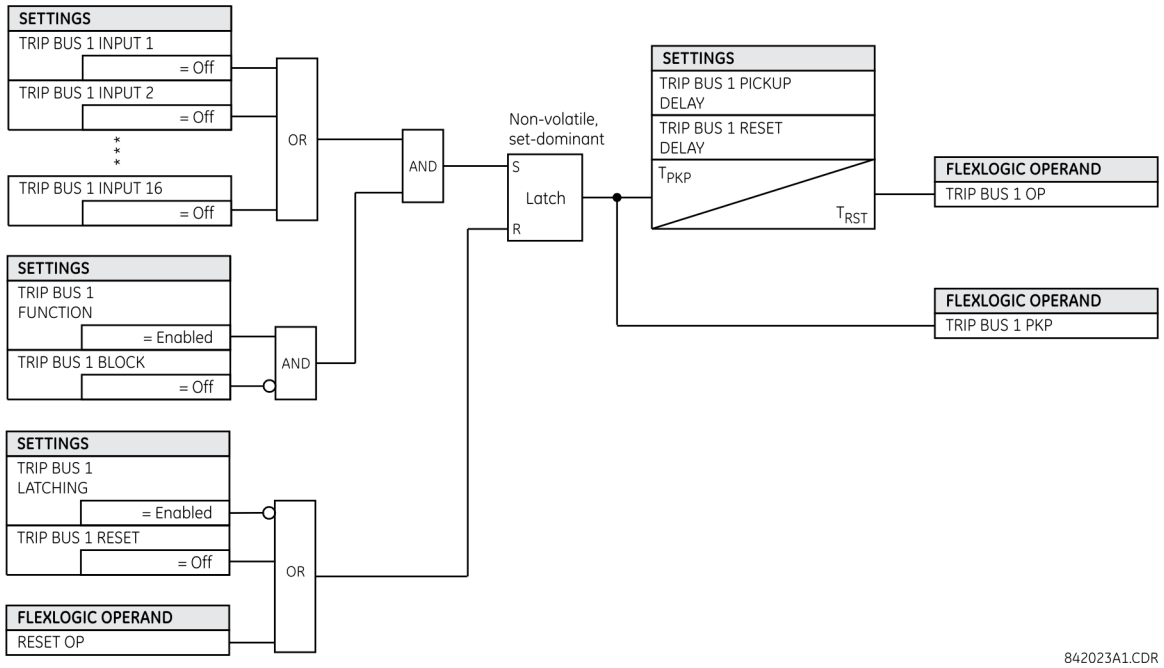

4.4 FlexLogic design using Engineer

Parts of EnerVista Viewpoint Engineer software are integrated in the EnerVista UR Setup software. Engineer can be used to create and modify FlexLogic that is used by a device, such as to monitor output, monitor triggers, and create self-tests.

Features include

- Automatically displays existing FlexLogic
- Drag-and-drop interface
- Open multiple tabs and edit simultaneously
- Display symbols in IEC, ISO, or UR formats
- Export a diagram as BMP file or copy it to the clipboard for import into other applications
- Scale and print files in various paper sizes
- Works with all UR firmware versions

The figure shows an example where several inputs are used to trigger an output. With the OR function, any one of the inputs can trigger the output.

Figure 4-65: Inputs triggering output in Engineer

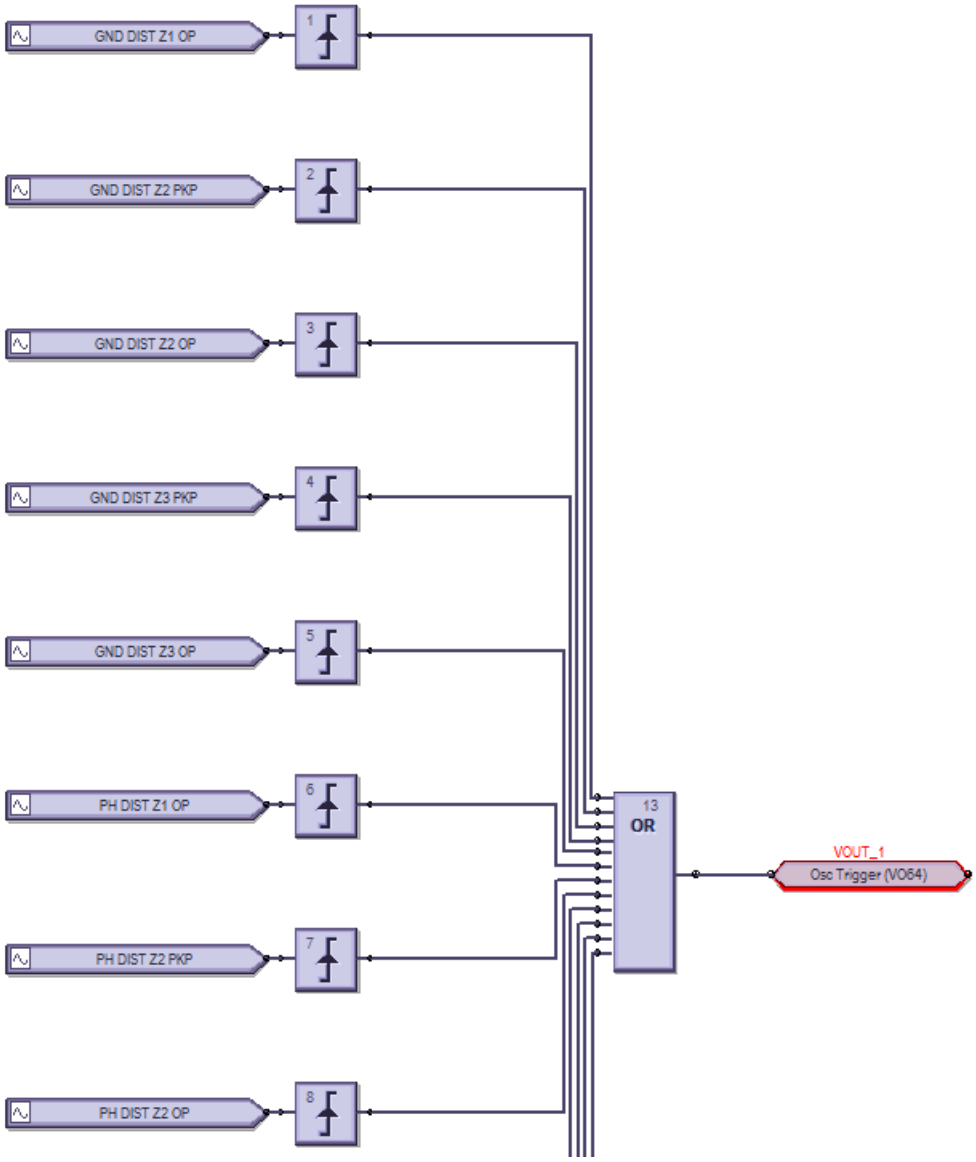

The process is as follows:

- Modify or create a logic diagram in the Offline Window area of the EnerVista UR Setup software
- Compile it and troubleshoot any errors
- The logic populates automatically into the FlexLogic Equation Editor
- Upload the file to the live device
- Monitor the output

This section explains how to use Engineer. It outlines the following topics:

- Design logic
- Send file to and from device
- Monitor logic
- View front panel
- Generate connectivity report
- Preferences

- Toolbars

4.4.1 Design logic

FlexLogic can be created with a block diagram. Note that although work is completed in the Offline Window area of the software, communication occurs with the online device, for example when switching to monitoring mode.

The following procedures are outlined:

- Examples
- Add existing FlexLogic equations
- Create a logic diagram/sheet
- Rapidly add logic blocks in sequence
- Connect two logic diagrams/sheets
- Optimize the logic
- Change logic order
- Search logic
- Exclude sheet from compile

4.4.1.1 Examples

Create oscillography trigger every three minutes

Figure 4-66: Three-minute timer turns on LED for 10 seconds

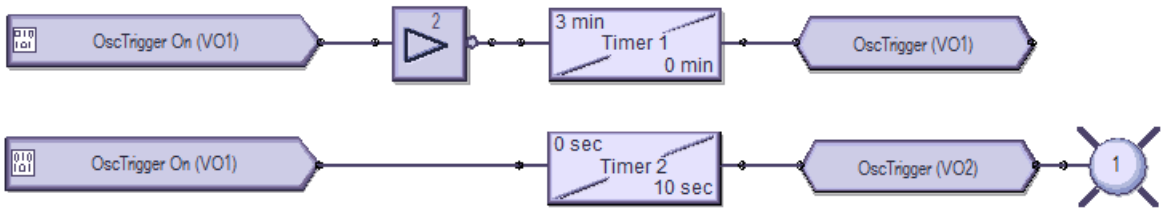

Preparation — Under **Settings > Inputs/Outputs > Virtual Outputs**, the first and second virtual outputs are named OscTrigger

Top logic — Three-minute timer trigger

Bottom logic — Turn on LED 1 for 10 seconds when the trigger starts

Create data logger trigger every seven minutes

Figure 4-67: Seven-minute timer turns on LED for 10 seconds

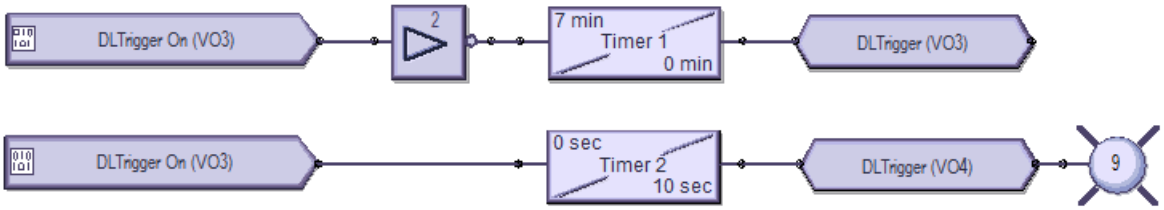

Preparation — Under **Settings > Inputs/Outputs > Virtual Outputs**, virtual outputs 3 and 4 are named DLTrigger

Top logic — Seven-minute timer trigger

Bottom logic — Turn on LED 9 for 10 seconds when the trigger starts

Create events every minute, then every 100 ms

Figure 4-68: One-minute timer turns on LED and creates events every 100 ms

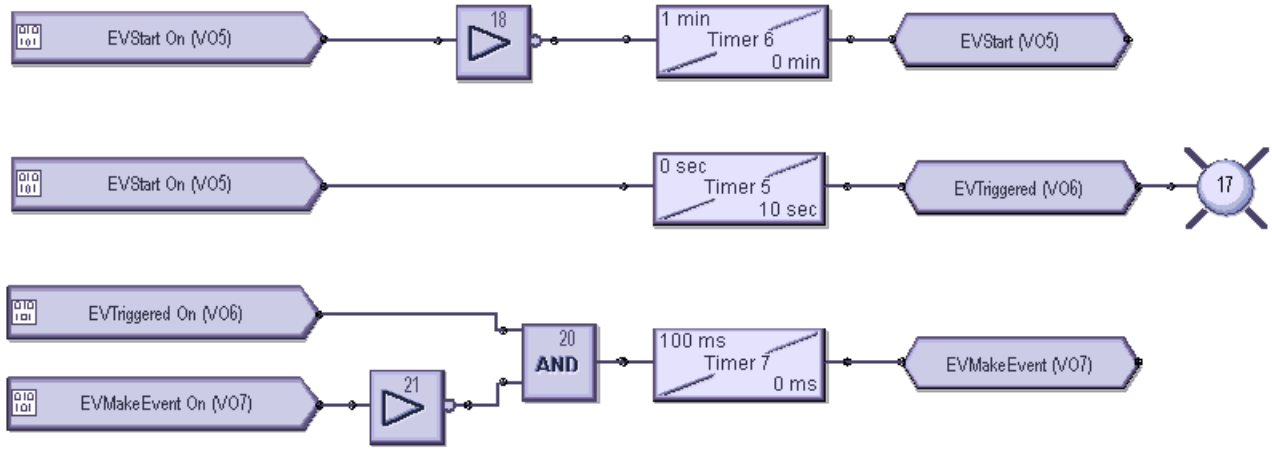

Preparation — Under **Settings > Inputs/Outputs > Virtual Outputs**, virtual output 5 is named EVStart, 6 is named EVTriggered, and 7 is named EVMakeEvent

Top logic — One-minute timer trigger

Middle logic — Turn on LED 17 for 10 seconds when trigger starts

Bottom logic — Create events at 100 ms intervals for the same 10 second period

4.4.1.2 Add existing FlexLogic equations

A logic diagram can be created using existing FlexLogic equations (this section) or by creating new ones (next section).

When using existing equations, you modify them in the FlexLogic Equation Editor in the Offline Window area, then apply them.

NOTE

The FlexLogic Equation Editor window is in view-only mode when the Logic Designer is open. To instead work in the FlexLogic Equation Editor, close the Logic Designer window, then re-open the FlexLogic Equation Editor.

To create a logic diagram using existing FlexLogic equations:

1. In the Offline Window area, modify the FlexLogic for the device under **FlexLogic > FlexLogic Equation Editor**. If the device is not listed, right-click the device in the Online Window area and select the **Add Device to Offline Window** option.

   Upon saving the modified FlexLogic, a yellow icon appears for the device in the Offline Window area to indicate that the logic differs from the Online device.
2. In the Offline Window area, access **Engineer** for the device, then **Logic Designer**. The logic opens.
3. Click the **Edit > Auto Populate Workbook** menu item. If the software prompts if you want to keep or discard existing sheets, either is acceptable, with the older excluded sheeted being denoted by brackets, such as < Sheet 1 >. The logic displays in the various tabs. The FlexLogic created in the equation editor appears in Sheet 1, for example.

4.4.1.3 Create logic diagram

Upon access of the Logic Designer, the FlexLogic equations of the device display. You can create new logic in new sheets or modify the ones that display.

This procedure uses input / output logic as an example.

To create a logic diagram:

1. In the Offline Window area, access **Engineer** for the device, then **Logic Designer**. If the device is not listed, right-click

the device in the Online Window area and select the **Add Device to Offline Window** option.

Figure 4-69: Access Engineer in the Offline Window area

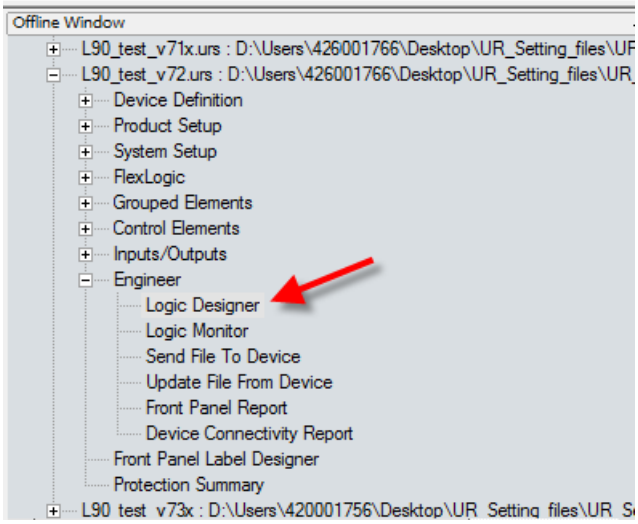

A default block diagram opens that shows 48 inputs (boxes) and 48 user-programmable LEDs (circles).

For the graphical front panel, no LEDs can be added to the window and the LEDs are removed when opening any existing files. For these existing files with the LEDs removed, save the file without them.

Figure 4-70: Default view of FlexLogic designer

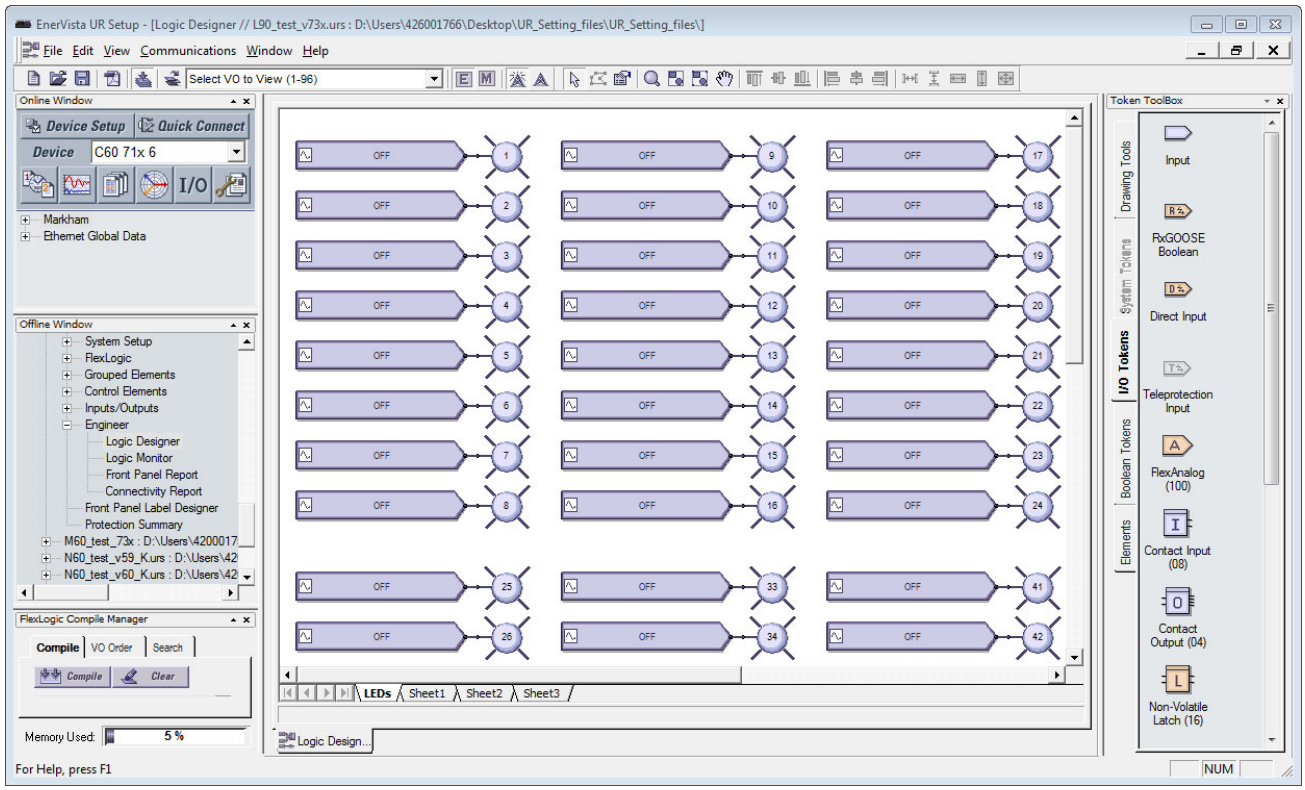

2. Optionally delete the default logic diagram by right-clicking its tab at the bottom of the window and selecting **Delete**.
3. To add a blank sheet, click **Edit > Add Sheet**. A new tab displays. Or use the last tab displayed, which is a blank sheet.
4. Optionally right-click the new tab and **Rename** it.

5. Add the input blocks to the logic diagram. For example, click the **I/O Tokens** tab on the right, click the **Input** element, then click in the logic sheet to add it. Or drag-and-drop it.
6. Double-click the block on the sheet to configure it, selecting from the two drop-down lists. The figure shows that virtual input 61 is being added. The **View Associated Screen** button opens its settings window.

Figure 4-71: Configuring an input block

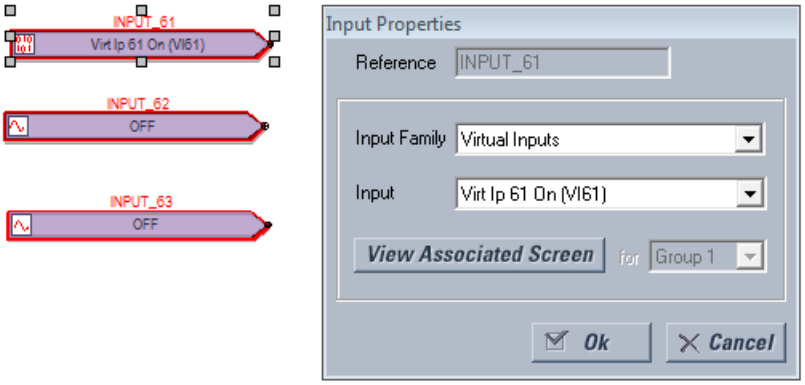

7. Add the output blocks to the logic diagram. For example, click the **I/O Tokens** tab, click the **Virtual Output** element, then click in the logic sheet to add it. Double-click the block on the sheet to configure it. For the name, make it unique. The figure shows virtual output 61 is being added, with a suffix of "io" added to the name to make it unique. Note that the outline color of a block is red until it is configured, and that this properties window varies by block and the selectable options by order code.

Figure 4-72: Configuring an output block

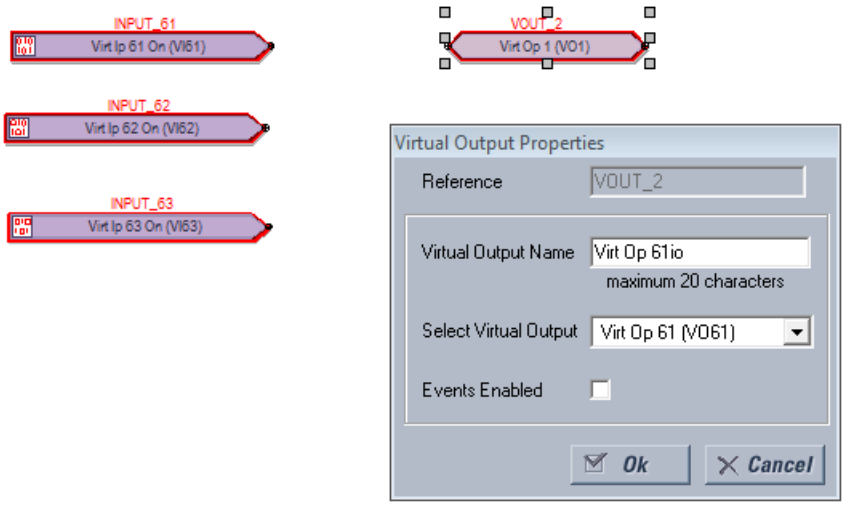

8. Connect the input blocks to the output blocks by drawing a line as follows. Click the **Drawing Tools** tab, then select the **Line** option. The cursor needs to be at the connection point to end the line, not elsewhere on the block. Note that the outline color is no longer red on the blocks.

Figure 4-73: Completed inputs and outputs

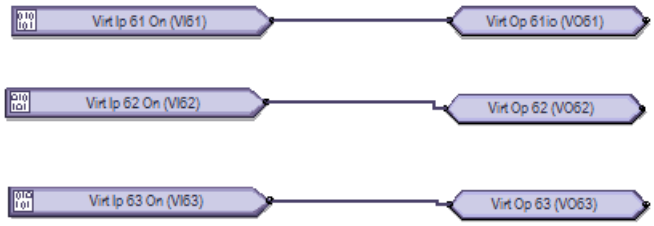

9. Add any remaining blocks or information. Right-click a block to copy and paste it. Notes are as follows.

   Add a text box — Drawing Tools > Text

   Add a FlexElement — Elements > FlexElement. An analog input is expected where a small arrow head shows in the box.

Figure 4-74: FlexElement accepts analog inputs on left side where arrow heads display

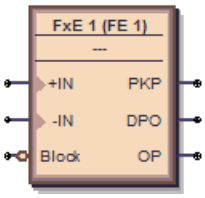

Add an Element — **Elements** tab. Available elements reflect the product, for example the **Control Elements** category.

Figure 4-75: Elements reflect Control Elements

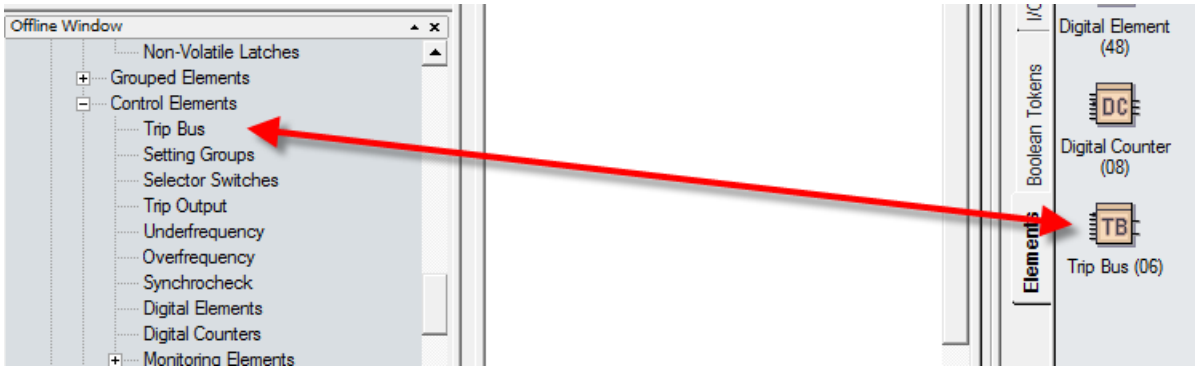

10. Check for any blocks that have a red outline. These are invalid. Fix them before continuing, for example by configuring them.
11. Compile the logic diagram to check for errors by clicking the **Compile** button at the bottom left or by pressing the **F7** key.

    If prompted about a message about sorting, click **Yes** to apply the default (for this example), which can be automatic sorting based on an algorithm that applies fastest execution time.

    With successful compiling, the file is saved and the FlexLogic equations populate automatically. Scroll up through the compile messages, with the red errors being the only messages that require fixing before proceeding.

    The figure shows that we forgot to add the "Io" suffix to the names of virtual outputs 62 and 63, as indicated by "Warning: Virtual output xx using default name." This warning is a minor warning.

    The warning "input using disabled feature" means that input needs to be enabled. Double-click the block, click the **View Associated Screen** button, enable the setting, save, and recompile.

    The output and messages are explained in the next section.

Some information displayed in the compile messages updates automatically, for example messages after a device is unplugged.

Figure 4-76: Compile and check the logic

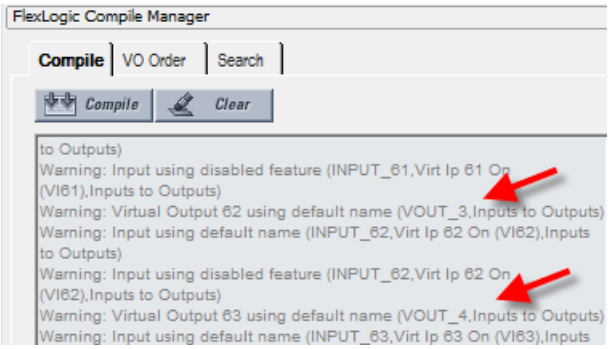

12. View the FlexLogic equations by navigating in the Offline Window area to **FlexLogic > FlexLogic Equation Editor**. The window opens with the entries displayed in the next tab.

Figure 4-77: Logic displayed in FlexLogic Equation Editor

FLEXLOGIC ENTRY	TYPE	SYNTAX
View Graphic	View	View
FlexLogic Entry 1	Virtual Inputs On	Virt Ip 61 On (VI61)
FlexLogic Entry 2	Assign Virtual Output	= Virt Op 61io (VO61)
FlexLogic Entry 3	Virtual Inputs On	Virt Ip 62 On (VI62)
FlexLogic Entry 4	Assign Virtual Output	= Virt Op 62io (VO62)
FlexLogic Entry 5	Virtual Inputs On	Virt Ip 63 On (VI63)
FlexLogic Entry 6	Assign Virtual Output	= Virt Op 63io (VO63)

13. Save the work.

The logic diagram has been created and the FlexLogic equations populated. The next steps are to upload the file to the device and to monitor the device.

4.4.1.4 Compiled results and warning messages

When a yellow caution icon displays in the Offline Window area, it means that the settings file is not synchronized with the online device. Right-click the device in the Offline Window area, and select the **Update SCL files** option. SCL refers to the Substation Configuration Language. An Instantiated IED capability description (IID) file is an example of an SCL file and contains the actual settings on a UR device.

Figure 4-78: Settings files not synchronized between offline and online files

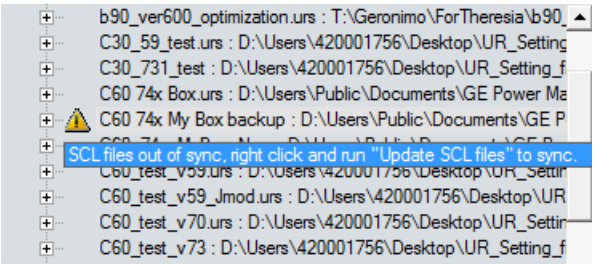

When the **Update SCL files** option is selected, the CID and IID files in the device folder are updated by the user configuration in the IEC 61850 panel and thereby become synchronized. The CID file and the IID file (depending on the preference 'Do not update IID file when updating SCL files') are updated. If the CID file is not already there, it is generated.

The location of these files is C:\ProgramData\GE Power Management\urpc, for example, in the Offline and Online folders. Any FlexLogic equations entered in the Offline Window area are erased. The logic drawn in the Logic Designer window in Engineer in the Offline Window area remain. The warning icon disappears after updating.

The following information is contained in the compile window.

Figure 4-79: Compiled results

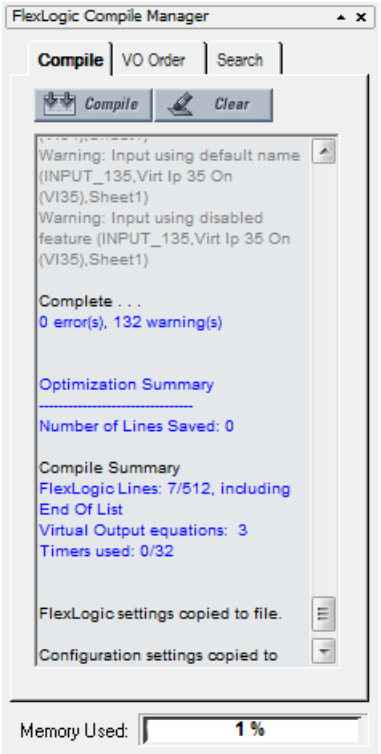

Number of Lines Saved — The number of compiled logic lines eliminated by using the optimization algorithm, as set in the **Optimize Compiled Output** option of the Preferences. In the example shown, no lines were saved because the optimizer is disabled.

FlexLogic Lines — The number of lines that the compiled logic uses, for example seven of 512 available.

Virtual Output equations — The number of FlexLogic equations used in the Logic Designer window.

Timers used — The number of timers used in the Logic Designer window.

Memory Used — The percent of memory used in the Logic Designer window.

Errors

Table 4-3: Errors from compiling

Category	Block or gate affected	Message	Description
Error	All	Number of lines (nnn) exceeds maximum limit of 512	The compiled result exceeds the limit of 512. Reduce the number of equations to 512 or less.
Error	Tag-In	Tag-in not configured (TAG_ID, SheetReference)	A Tag-In is connected to a circuit but the Tag-In is not referencing an existing Tag-Out
Error	1 Shots	One Shot is over limit (SYMBOL_ID, SheetReference)	The number of One-Shots contained within all of the VO blocks has exceeded the maximum allowed for the firmware revision. This value can either be 0 or 32.
Error	=VO	VO has no inputs (VO_ID, SheetReference)	A Virtual Output block is located within the FlexLogic diagram and there is no block connected as input to it. Connect and identify the inputs.

Category	Block or gate affected	Message	Description
Error	Timer	Timer used more than once (TIMER_ID, SheetReference)	The same timer is used in more than one place in the editor. This means either the circuit that the Timer belongs to has been branched, or the Timer has been duplicated.
Error	Input	Unrecognized Parameter (SYMBOL_ID,Name,SheetReference)	An Input symbol is configured to an item that is not recognized by the current order code and version. Possible cause: The order code and/or version of the settings file was converted causing the input parameter to become unavailable.

Warnings

When using the 'Reset OP' operand, a warning can appear indicating that this is a disabled feature. This means that the Reset Settting's FlexLogic operand is set to OFF. Resetting of the relay can be done by pressing the reset button on the front panel of the relay or by sending a Reset command through communications.

Table 4-4: Warning messages from compiling

Category	Block or gate affected	Message	Description
Minor warning	Input	Input set to unused VO (SYMBOL_ID,Name,Sheet)	An Input symbol is using an unassigned Virtual Output
Major warning	Tag-Out	Tag-out not connected (TAG_ID,Sheet)	A Tag-Out symbol has no input
Major warning	All	Symbol not connected (SYMBOL_ID,Name,Sheet)	A symbol's input and/or output is not connected and is not part of a VO block. Draw the input and/or output to the block.
Minor warning	=VO	Virtual Output n using default name (VO_ID,Sheet)	The Assigned Virtual Output is using the default name. Change the name.
Minor warning	Input	Input using default name (SYMBOL_ID,Name,Sheet)	An Input symbol is using a Contact Input, Contact Output, Digital Element, FlexElement, or Digital Counter set to the default name. Change the name so that it is unique.
Setting warning	Input	Input using disabled feature (SYMBOL_ID,Name,Sheet)	An Input symbol is using a disabled Virtual Input, Contact Input, Digital Element, FlexElement, Digital Counter, Control Pushbutton, Programmable Pushbutton, Contact Output, or Protection/Monitoring Element. Enable it and try again.
Major warning	Input	Input set to OFF (SYMBOL_ID,Sheet)	An Input symbol is set to OFF
Major warning	Input	Input set to ON (SYMBOL_ID,Sheet)	An Input symbol is set to ON
Setting warning	Input	Contact Output Operate is OFF (SYMBOL_ID, Contacts)	The symbol block is using the default setting of OFF
Setting warning	Input	Contact Output Seal-In is OFF (SYMBOL_ID, Contacts)	The symbol block is using the default setting of OFF

4.4.1.5 Rapidly add logic blocks in sequence

Blocks are added by clicking an element then clicking in the drawing area, or by dragging and dropping the element onto the canvas. Blocks can be added rapidly in sequence, for example when you have inputs 1 to 10, without having to select the element each time.

To rapidly add logic blocks:

1. In Engineer, click **File > Preferences**. The window opens.
2. Click the **Editor** entry.
3. Enable the **Repeat Symbol** check box.
4. Click the **Ok** button to save and exit from the window.
5. In the logic diagram, select an element, then click in the drawing area to add it, click again to add a second box, and so on.

4.4.1.6 Connect two logic diagrams

When the logic is complex and requires two sheets, for example, these two sheets can be connected. By connecting them, the logic is continuous from one sheet to the next.

To connect two logic diagrams:

1. In the first sheet, click the **I/O Tokens** tab.
2. Scroll to the bottom, and click and drag the **Tag Out** element to the sheet where the next sheet is to connect.
3. Double-click the element and in the window that opens, give it a name, such as "To Sheet 2" or "To IO Sheet 2."

Figure 4-80: Connecting sheet 1 to sheet 2

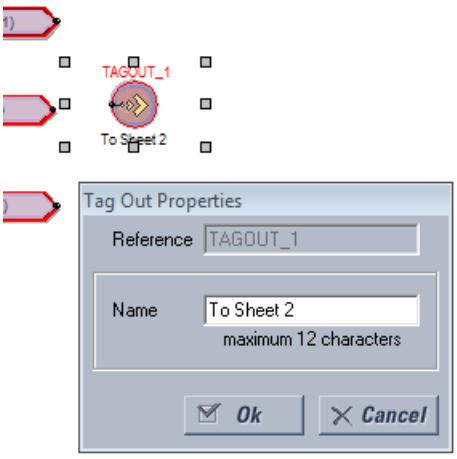

4. In the second sheet, click and drag the **Tag In** element to the sheet where the first sheet is to connect.
5. Double-click the element and in the window that opens, select the first sheet from the drop-down list to connect the two sheets.
6. Save the work.

4.4.1.7 Optimize the logic

The number of available FlexLogic entries depends on firmware, for example 515 or 1024 lines. The software can automatically optimize a logic diagram to reduce space and free up entries.

To optimize the logic:

1. In Engineer, under **File > Preferences**, select the **Compiler** option. Ensure that the **Optimize Compiled Output** option is enabled.
2. Run the compiler again, for example by clicking the **Compile** button at the bottom left of the software. The results display in the Optimization Summary. Changes also display when the FlexLogic Equation Editor is accessed. The logic diagram does not change. In the example shown, no lines were saved to free up space.

Figure 4-81: Code optimization results

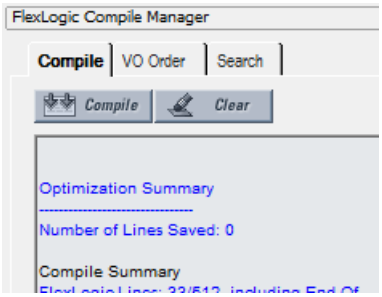

4.4.1.8 Change logic order

The order in which the FlexLogic is populated in the FlexLogic Equation Editor window depends on settings.

First, when automatic sorting is not enabled, the sequence in which the blocks were drawn is followed.

Second, the order in which equations are executed can be manually changed, as outlined here.

Third, automatic sorting can be set in preferences, as outlined here. It is enabled by default and means that an algorithm is implemented to give best results and quickest performance, For example, the block with the fastest execution time is entered first in the FlexLogic. When two block functions have the same execution time the block drawn first displays first in the FlexLogic. For example, drawing input 61 to output 61, then input 62 to output 62 causes the input/output 61 to be entered into the FlexLogic first. Automatic sorting takes precedence over manual sort; if you enable this option, manual sorting is not implemented.

To manually change logic order:

1. In the compile area, click the **VO Order** tab.
2. If the window is blank, click the **Refresh** button.
3. Select an entry and click the up or down arrow. To cancel any manual changes, click the **Sort** or **Refresh** button.
4. Recompile. The change is not executed or saved if automatic sorting is enabled.

Figure 4-82: Ordering FlexLogic entries

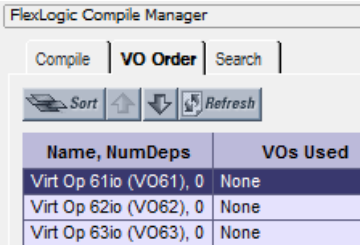

To set automatic sorting:

1. In Engineer, under **File > Preferences**, select the **Compiler** option. The **Automatically Sort VOs** option means that the block with the fastest execution time is entered first in the FlexLogic. When two block functions have the same execution time the block drawn first displays first in the FlexLogic. For example, drawing input 61 to output 61, then input 62 to output 62 causes the input/output 61 to be entered into the FlexLogic first.

4.4.1.9 Search logic

Items that can be searched in a logic diagram include gates, Input, Contact Input, Contact Output, Timer, Virtual Output, Tag In, Tag Out, and User-programmable LED. A search can be performed while designing or monitoring.

To search:

1. In the compiler area of Engineer, click the **Search** tab.
2. Use one of the following methods to set search criteria:
   - Select an element from the first drop-down list. Results display automatically.
   - Type in the second text string box, or select any of the 32 previous searches from the drop-down list. Click the **Search** button. Any results display.

   The search applies to all tabs, not just the active tab.
3. Double-click a search result to view the item.

Figure 4-83: Search function

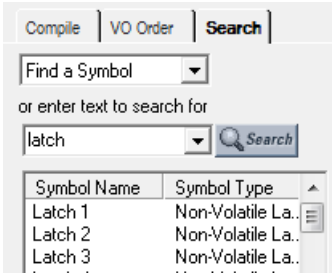

NOTE

You can also select an element from the drop-down list on the toolbar. It is then highlighted in the logic diagram.

4.4.1.10 Exclude sheet from compile

4

While designing the FlexLogic equations, entire sheets can be removed from the compile logic. This allows the user to test various schemes by placing schemes on separate sheets and including either sheet at compile time.

To exclude a sheet:

1. In the Logic Designer window, right-click the tab and select the **Exclude from Compile** option so that the check mark displays. When sheets are excluded, a message displays with each compile that "excluded sheets will not be reflected in the RPN." An excluded sheet is denoted with end brackets, similar to < Sheet 1 >.

Figure 4-84: Excluding a tab from compiling

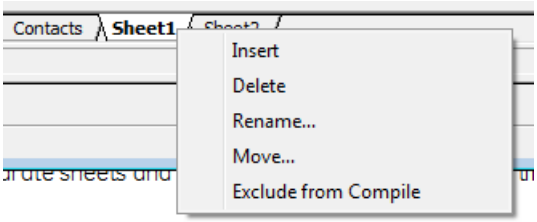

Figure 4-85: Tab excluded from compiling

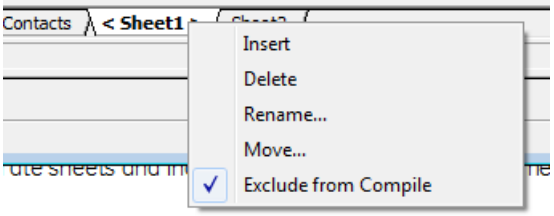

4.4.2 Send file to and from device

With the logic diagram created, compiled, and errors eliminated, the FlexLogic can be sent to a live device. And, conversely, a file from a live device can be added to the Offline Window area for additional work.

To send a file to a device:

1. In the Offline Window area of the software, right-click the device name and select the **Write Settings to Device** option. A prompt can appear that the URS file has been repaired; acknowledge the message.
2. When a window opens, select the device to which you want to send the file, then click the **Send** button and confirm. The order codes must match. The file is sent to the live device. Any errors can be viewed in the log file at the prompt.

To import a file from a device:

1. Close all open files in Engineer that relate to the device, else a message displays to that effect, for example to close the FlexLogic view associated with the file. When the file is not associated with a live device, a message displays to that effect; you need to identify the device to which you want to send the file. The order codes must match.
2. Right-click the device in the Online Window area and select the **Add Device to Offline Window** option. After you enter a name for the file, it is written to the Offline Window area.

4.4.3 Monitor logic

After creating the logic diagram, validating it, and uploading the FlexLogic to a device, the results from the device can be viewed.

The following checks are performed automatically when switching from design to monitoring, and prompts display when necessary:

- Verify that the order code of the linked relay matches the settings file
- Verify that the version of the linked relay matches the settings file
- Verify that the FlexLogic Equation Editor of the linked relay matches the settings file. Solution: Compile the FlexLogic logic diagram and send the settings file to the relay.
- Verify that the FlexLogic Timers of the linked relay match the settings file. Solution: Compile the FlexLogic logic diagram and send the settings file to the relay.
- If the settings file contains a serial number lock, then verify that the serial number of the linked relay matches the settings file

To view results:

1. In the Offline Window area of the software, expand the **Engineer** entry for the device.
2. Double-click the **Logic Designer** entry and **Compile** the logic.
3. Double-click the **Logic Monitor** entry, or click the **M** button in the toolbar at the top of the window. With successful launch, the logic displays and a green indicator displays at the bottom of the tab.

   When the file is not associated with a live device, a message displays to that effect; you need to identify the device to which you want to send the file. The order codes must match between the Offline Window and the Online Window.

   When the device is offline, a message indicates problems communicating with the device.

   When the devices are not synchronized, a message indicates the FlexLogic does not match the settings file. To send the offline file to the device, right-click the device name and select the **Write Settings to Device** option.

   When the state of a symbol is OFF, the symbol is shown in the default color or no color.

   When a symbol's state changes to ON, the symbol and connection line turns green.

   The state of some symbols can either be unknown or the state transitions faster than the update interval. For these two cases, the state of the symbol is considered 'UNKNOWN' and the symbol is outlined in red.

   The colors for the ON and Unknown state can be customized in the Preferences.

   The figure shows that the software is communicating with devices (square green indicator) and that a minor error is present (green box outline). In this case, the battery is weak and needs to be replaced. This can be viewed as the Replace Battery message on the front panel of the device and in the EnerVista software under **Actual Values > Front Panel > Front Panel** or **Display/Keypad**.

Figure 4-86: Monitoring a device, with minor error caused by weak battery

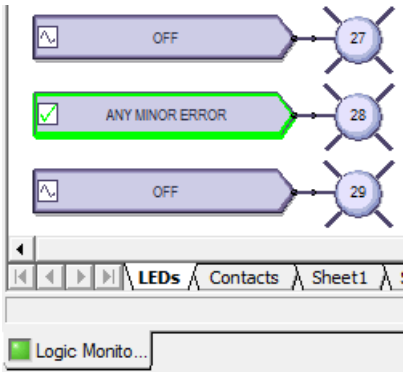

4.4.4 View front panel and print labels

This window displays the LEDs that are on the front panel. You can create labels and print them for the device. You do not use the window to add text labels and upload them to the device. Custom labelling is also outlined earlier in this chapter; see the Front Panel Labelling section.

To view the front panel:

1. In the Offline Window area of the software, expand the **Engineer** entry for the device.
2. Double-click the **Front Panel Report** entry. The report displays. The Device Summary is read from the settings file and cannot be changed. The LEDs and pushbuttons display below the summary.
3. To save the report, click **File > Save As**, enter a file name, and select the front panel report (FPR), JPG, or PDF format.

Figure 4-87: Front panel display in Engineer

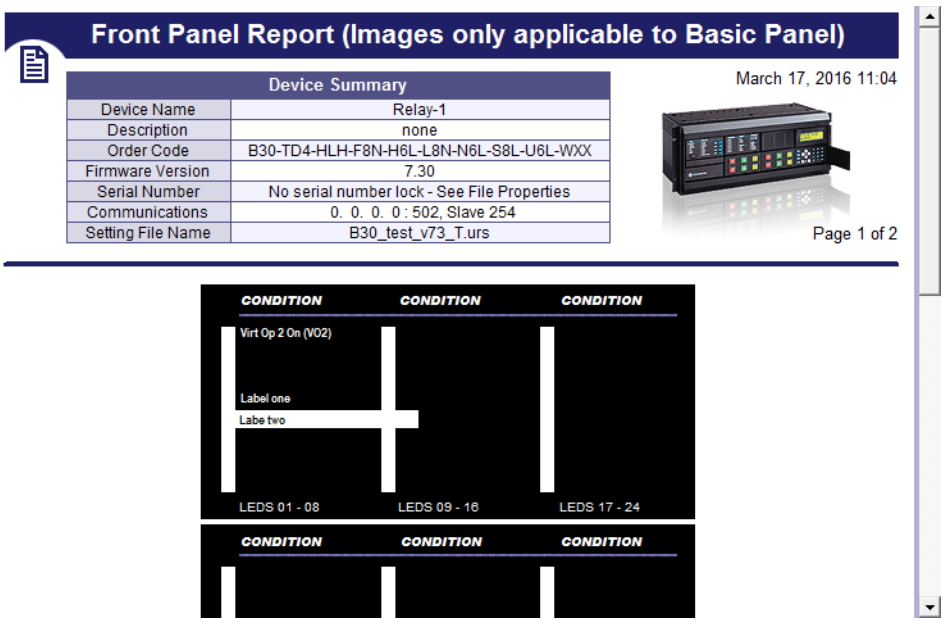

Device Summary	
Device Name	Relay-1
Description	none
Order Code	B30-TD4-HLH-F8N-H6L-L8N-N6L-S8L-U6L-WXX
Firmware Version	7.30
Serial Number	No serial number lock - See File Properties
Communications	0. 0. 0. 0 : 502, Slave 254
Setting File Name	B30_test_v73_T.urs

To print labels:

1. In the **Front Panel Report** window, double-click an LED or pushbutton and enter text.
2. To print the labels, click the **Print** icon on the toolbar.
3. To save the report and labels, click **File > Save As**, enter a file name, and select the FPR, JPG, or PDF format.
4. Use the instructions in the second tab of the window to add the labels to the physical device.

4.4.5 Generate connectivity report

This report displays basic information about a device, such as order code, port numbers, inputs and outputs. You can use it to create a PDF file of basic information. The report is based on CID and/or IID files, and not the system or full SCD. All device details including Remote Inputs, Remote Outputs, and Analog Inputs/Outputs are indicated, including quantities used and available.

To display a device report:

1. In the Offline Window area of the software, expand the **Engineer** entry for the device.
2. Double-click the **Device Connectivity Report** entry. The report displays.
3. To save as a PDF file, click **File > Save As**.

Figure 4-88: Device Connectivity Report

Device Connectivity Report

Device Information

Filename / Device Name	Order Code / Revision / Serial Nr.	File Details
D30_test_v73.urs Relay-1	D30-U03-HLH-F8L-H6L 7.3x No serial number lock - See File Properties	Size: 2683 KB Last Modified Date: 15.11.2016 23:29:41 Path: D:\Users\ \Desktop\UR_Setting les\UR_Setting_files\D30_test_v73\

Device Details

Physical Ports Available	Port Settings	Services / Protocols
RS232	RS232 Baud Rate: 115200	DNP 3.0
RS485	RS485 Baud Rate: 115200	IEC 60870-5-104
2 * 100BaseFX Eth, Multimode, SFP with LC	Port1 IP: 3. 94.244.210	IEC 61850
1 * 100BaseT Eth, Multimode, SFP with RJ-45	Port2 IP: 127. 0. 0. 1	EGD

4.4.6 Preferences

Preferences determine functionality. As such, you are encouraged to review them. This section outlines some options available in the menus and preference panels.

Access them in the **Logic Designer** panel under the **View** menu and under **File > Preferences**. The Logic Designer and Logic Monitor preferences are outlined here, not all preferences for a device.

4.4.6.1 View menu

View > Toolbar > Advanced Actions — Active when in Logic Designer. Toggles a toolbar to nudge, rotate, flip, or change the order of an element.

View > Show Unused Pins — Enable to display unconnected pins. Disable to eliminate unconnected pins from the view, for example when printing.

Figure 4-89: Unused pins on and off

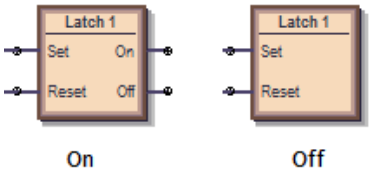

4.4.6.2 Logic designer

The path is **File > Preferences > Logic Designer**.

Workbook Setup

Size and Units

Size and Units — Changes the size of diagram area displayed in Engineer. If you set the size to be smaller than an existing logic diagram, the content is cut off.

4

WorkBook

Print Scale — The scale for logic diagram when printing. Scaling a large diagram to 200 percent, for example, results in the diagram being cut off.

Orphan Protection — When enabled, the printing output prevents Virtual Output circuits from spanning more than a single page. The largest Virtual Output circuit is scaled to fit on a single page and all remaining Virtual Output circuits are scaled so that all circuits are printed using the same scale.

Show Title Block — When enabled, places an information box at the bottom right of the diagram when printing. Enter the information in the **File Information** panel.

Show Sheet Name — When enabled, shows Sheet 1, Sheet 2, or any other name at the top of the logic diagram when printing.

Start Sheet On New Page — Places the sheet on the next page when printing.

Show Notes Selection — When other than None, prints the text from any information notes added to the document (under **Drawing Tools** tab > **Note**). The text is printed after the logic diagram.

File Information

The text entered here displays at the bottom right of a diagram when printing, provided that the **Show Title Block** option is enabled. Note the option to change the logo from the GE logo to your company logo.

Display

The panel sets how the element boxes display. The figure shows how an AND gate displays when the UR default, IEC, or ISO symbol type is selected.

Figure 4-90: AND gate varies by standard selected

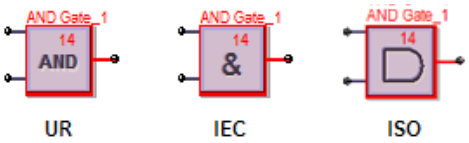

Symbol Style — IEC, ISO, UR Setup — Sets how the gates display in the logic diagram.

Symbol Color — When set to Black & White, only logic blocks with issues continue to display red.

Zoom Operation — Determines what happens when the **View > Zoom** functions are used. When set to Sheet Only and the zoom is changed, the single tab changes. When set to Workbook, all tabs change.

Editor

Repeat Symbol — Enable this feature to add element blocks rapidly in sequence, for example when you have inputs 1 to 10, without having to select the element each time. Select the element block from the toolbox, click the diagram, then continue to click to add additional blocks.

Use first available VO / Timer — When enabled and you copy and paste a virtual output or timer element, the numbering continues in sequence. For example, you copy timer 5 and paste it as timer 6. When disabled and you copy and paste a virtual output or timer element, the same number is used. For example, you copy timer 5 and paste it as timer 5.

Auto-Save Logic Designer every x minutes — Logic diagrams with changes are saved automatically according to this interval. The range is 5 minutes (default) to 30 minutes. With auto-save, the file extension of the saved file is .auto. This file remains until you save the file manually.

Auto Populate

These options work in the **Edit > Auto Populate Workbook** function.

VOs per Worksheet — When an existing settings file is opened in the Logic Designer, the Logic Designer populates the canvas and attempts to evenly distribute the Virtual Output circuits across multiple sheets. A value of 100 in this setting places all FlexLogic equations on a single sheet until there are 100, then the next ones are placed on another sheet. A value of 1 places each Virtual Output circuit on a separate sheet.

Show / **FlexLogic Merge** / **Show Unused** — If Show Contact Outputs and Show LEDs are selected, for example, the function places Contact Output and User-programmable LED symbols for settings that are configured. If you disable the LED check boxes, then the LED tab/sheet does not display when you next open the Logic Designer window. The settings apply to all products, not just the active window when it is next opened. Close then reopen the Logic Designer window for the setting to take effect.

4

Compiler

Show Warnings — Options to filter the messages that display when logic compiles.

Minor — Enable to display minor errors. An example is using the default values of an element added to the diagram, such as the name of the element. An example is "Warning: Virtual output xx using default name," for which you simply click into the element to rename it.

Major — Enable to display major errors. Examples are an input that does not have a corresponding output, using disabled features, and failing to connect a symbol. Fix these errors.

Setting — Enable to display error message related to settings, such as an improperly configured setting, such as using ON or OFF.

Automatically Sort VOs — When enabled, the logic is compiled with an algorithm to give best results and quickest performance, for example the fastest logic first. The fastest logic displays in the FlexLogic Equation Editor output as the first entries in the table. Use sorting when virtual outputs have dependencies on other virtual outputs. This setting takes precedence over order set manually in the **VO Order** tab in the compiler.
When disabled, the sequence in which the blocks were drawn is followed.

Optimize Compiled Output — With this option enabled, the software automatically optimizes a logic diagram to reduce space and free up FlexLogic entries. Run the compiler again, for example by clicking the **Compile** button at the bottom left of the software. The number of saved lines displays in the Optimization Summary. Changes also display when the FlexLogic Equation Editor is accessed. The logic diagram does not change.

4.4.6.3 Logic monitor

Display

The software displays the color specified when an element is on. There is no color when the element is off.

The software displays another color when the status cannot be determined and is unknown.

Timing

Timing Information can be displayed in the monitoring window. This timing information is only an approximate representation of how Engineer sees transitions. Use the device's Event Record to view accurate timing information.

The timing information can also be streamed to a comma-separated values (CSV) spreadsheet.

The timing information displayed and recorded can be filtered based on six categories. If a category is not selected, any timing information related to that category does not display and is not recorded to the CSV file.

Show Timing Information in Output Window — Enable to display times in the monitoring window.

Because of the update rate of the Logic Monitoring, the timing information cannot be used as an accurate representation of the events that occur within the relay. Use instead the device's event record. Timing information can be delayed by 30 seconds.

Save Timing Information to CSV File — Enable to write timing information in a spreadsheet. The timing information is recorded in a text file that uses commas to separate each of the fields. This file uses the extension CSV that is supported by any spreadsheet application.

Every change written to the CSV file requires a timestamp.

The format for the timing information in the output window is as follows:

4

yyyy/mm/dd hh:dd:ss
  devicename offline
yyyy/mm/dd hh:dd:ss
  devicename ONLINE
yyyy/mm/dd hh:dd:ss
  VO1: Virt Out 1- 0
  VI4: Virt In 4- 1
  DI3: Direct In 3- 0
  RI2: Remote In 2- 1
  H5a: Contact In 1- 1
  H1: Contact Output 1- 0

Data is only appended to the CSV file. The format for the data is as follows:

yyyy/mm/dd hh:dd:ss, devicename, offline
yyyy/mm/dd hh:dd:ss, devicename, ONLINE
yyyy/mm/dd hh:dd:ss, VO1: Virt Out 1, 0
yyyy/mm/dd hh:dd:ss, VI4: Virt In 4, 1
yyyy/mm/dd hh:dd:ss, DI3: Direct In 3, 0
yyyy/mm/dd hh:dd:ss, RI2: Remote In 2, 1
yyyy/mm/dd hh:dd:ss, H5a: Contact In 1, 1
yyyy/mm/dd hh:dd:ss, H1: Contact Output 1, 0

Options display for filtering, such as recording timing for Virtual Inputs and Outputs, but not Communications Status.

4.4.6.4 COMTRADE waveforms

Waveform files are viewable in the EnerVista software. The preferences are unrelated to Engineer and are outlined in the UR Family Communications Guide.

4.4.7 Toolbars

These are toggled in the **View > Toolbar** menu.

The UR symbols are displayed for the toolbox icons. They change when the default setting is changed to IEC or ISO symbols. The symbols displayed in the toolbox also vary by firmware version, reflecting what is supported for each release.

4.4.7.1 FlexLogic Editor toolbar

	New Device	Create a new settings file
	Open File	Open an existing settings file in the URS, CID, or IID format
	Save FlexLogic	Save the Logic Designer diagram
	PDF Report	Create a PDF document from Logic Designer diagram(s). Settings can be changed under **File > Preferences > Workbook Setup**.
	Toggle Compile Window	Display or hide the compile window area
	Sort Order	Select to change the sort order of the Virtual Output list to the right of the icon. Virtual Outputs can be sorted numerically in ascending and descending order based on numbers and names.
Select VO to View (1-96)	Select VO to View (x - x)	Select a Virtual Output to locate and select it in the workbook. Each Virtual Output listed also contains the name of the sheet where the Virtual Output is located.
	Edit Mode Logic Designer	Switch to Logic Designer mode
	Monitor Mode Logic Monitor	Switch to Logic Monitor mode
	Turn On ALL Communications	Turn on all communications to all Logic Designer diagrams that are in the monitoring mode. Default upon each launch of Engineer.
	Turn Off All Communications	Turn off all communications to all Logic Designer diagrams that are in the monitoring mode. This is a legacy function for serial communication to turn off communication to devices. Turning off communication applies to the current session only. When you re-launch the EnerVista software, communication is on by default.

4.4.7.2 Token Toolbox

Drawing Tools

Line	Draw a line. Click and drag to draw.
Polyline	Draw multiple joined lines. Click and drag for each line. Double-click to finish.

Polygon	Draw multi-sided object. Click for each line. Double-click to finish.
Rectangle	Draw four-sided object. Click and drag to draw.
Polycurve	Draw multiple curves. Click for each line. Double-click to finish.
Closed Curve	Draw multiple, closed curves. Click for each line. Double-click to finish.
Ellipse	Draw oval or circle. Click and drag to draw.
Text	Add text box with rectangle around it. Click to add. Double-click it to change text.
Image	Add figure. Select file in the window that opens, then click on diagram canvas to add figure.
Note	Add note icon and text. Click to add. Double-click to edit the title and text.

I/O Tokens

These are parts used in FlexLogic equations. They are the inputs and outputs of the Virtual Output equations. The display can vary from that shown here.

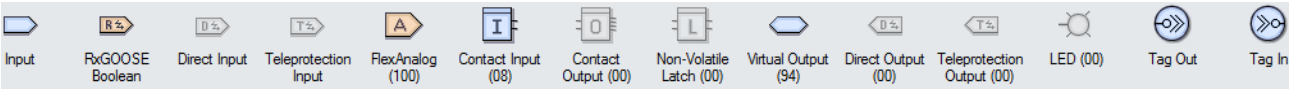

Input	Input symbol that can be configured to any FlexLogic operand value
RxGOOSE Boolean	Remote inputs from other devices
Direct Input	Input from another UR device. Teleprotection inputs/outputs and direct inputs/outputs are mutually exclusive and cannot be used simultaneously.
Teleprotection Input	Teleprotection inputs/outputs and direct inputs/outputs are mutually exclusive and cannot be used simultaneously.

FlexAnalog (100)	FlexAnalog symbol that can be used as the input to a FlexElement or use the FlexAnalog symbol to monitor an actual value when in logic Monitoring mode
Contact Input (24)	Contact Input Gate is similar to the Input symbol but is restricted to the operands associated with a Contact Input
Contact Output (00)	Contact Output Gate is similar to the Input symbol but is restricted to the operands associated with a Contact Output. The Operate and Seal-In settings can be configured graphically.
Non-Volatile Latch (00)	The Non-Volatile Latch is similar to the Input symbol but is restricted to the operands associated with a Non-Volatile Latch. The Set and Reset settings can be configured graphically.
Virtual Output (96)	The final output of an equation is a numbered register called a virtual output. Virtual outputs can be used as an input operand in any equation, including the equation that generates the output, as a seal-in or other type of feedback.
Remote Output (00)	Place and configure a Remote Output. The UR's order code and firmware version then determine the availability of the Remote Output.
Direct Output (00)	Place and configure a Direct Output. The UR's order code and firmware version then determine the availability of the Direct Output to another UR device.
Teleprotection Output (00)	Place and configure a Teleprotection Output. The UR's order code and firmware version then determine the availability of the Teleprotection Output.
LED (00)	Place a User Programmable LED in the Logic Designer diagram. Not applicable when using a graphical front panel.
Tag Out	A Tag Out can be used in 1 of 2 ways. The first use of the Tag Out is to break up logic that needs to span several sheets. The second use of the Tag Out is to associate a frequently used block of code with the Tag Out and then repeatedly use the same block of code using a Tag In. When a Tag Out is referenced more than once, the Tag Out is replaced with a Virtual Output during the compile phase.
Tag In	Tag-In can is used to reference an existing Tag-Out. It joins another diagram to a previous diagram.

Boolean Tokens

These symbols are used to create FlexLogic Equations. Use them as intermediate logic for the Virtual Output equations. The display can vary from that shown here.

OR Gate	Place an OR gate in the Logic Designer diagram. Only one action needs to occur. Any function input on the left side satisfies the condition. The number of inputs is configurable from two to 16.
AND Gate	Place an AND gate in the Logic Designer diagram. Multiple actions need to occur. All functions input on the left side are required to satisfy the condition. The number of inputs is configurable from two to 16.
NOR Gate	Place a NOR gate in the Logic Designer diagram. Gives the value of one when all input operands have a value of zero and otherwise gives a value of zero. It gives an output signal when there are no input signals. An inverter that reverses the logic state. The number of inputs is configurable from two to 16.
NAND Gate	Place a NAND gate in the Logic Designer diagram. Gives the value of zero when all input operands have a value of one and otherwise gives a value of one. It gives an output signal until all signals are present on its inputs. An inverter that reverses the logic state. The number of inputs is configurable from two to 16.
XOR Gate	Place a XOR gate in the Logic Designer diagram, which is two exclusive OR gates. Only one action needs to occur. If there are two inputs or there is no input, there is no output.
NOT Gate	Place a NOT gate in the Logic Designer diagram. Gives the value of one when the input operand has a value of zero and otherwise gives a value of zero. It gives an output signal when there is no input signal. An inverter that reverses the logic state.
Latch	Place a latch in the Logic Designer diagram. A latch has two inputs and one output. One input is the Set input, and other input is the Reset input.
Positive One Shot	Place a positive one shot symbol that responds to a positive going edge in the Logic Designer diagram. A "one shot" is a single input gate that generates a pulse ins response to an edge on the input.
Negative One Shot	Place a negative one shot symbol that responds to a negative going edge in the Logic Designer diagram
Dual One Shot	Place a positive one shot and a negative one shot symbol in the Logic Designer diagram
Timer (32)	Place a timer in the Logic Designer diagram

Elements

These blocks configure properties of the element or use element operands as input to FlexLogic equations.

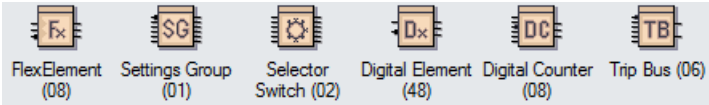

FlexElement (08)	Place and configure a FlexElement. A FlexElement is a universal comparator used to monitor any analog actual value calculated by the relay or a net difference of any two analog actual values of the same type.
Settings Group (01)	Place and configure the Settings Group settings
Selector Switch (02)	Place and configure a Selector Switch element. Firmware version determines feature availability. The Selector Switch element is intended to replace a mechanical selector switch. Typical applications include setting group control or control of multiple logic sub-circuits in user-programmable logic. The element provides for two control inputs.
Digital Element (48)	Place and configure a Digital Element. A Digital Element can monitor any FlexLogic operand and present a target message and/or enable events recording depending on the output operand state.
Digital Counter (08)	Place and configure a Digital Counter element. A Digital Counter counts the number of state transitions from Logic 0 to Logic 1. The counter is used to count operations such as the pickups of an element.

4

4.4.7.3 Basic Actions toolbar

	Select	Select components. Click one component and hold down the **CTRL** key to select others. Or click and drag an area that contains multiple components to select.
	Edit Vertices	Shows vertices points for the component selected (if the component support vertices manipulation)
	Properties	Shows the properties of the selected component
	Zoom Normal	Zoom in and center the screen to the spot selected
	Zoom to Fit	Zoom in to a magnitude that fits your entire schema layout on your entire screen
	Zoom Custom	Zoom in on the components that you have selected
	Pan	Move the viewable area of your screen around the schema. To activate, select this tool and then place the hand icon over and part of your schema. Click and drag the hand in a direction to move around the schema.
	Align Top, Middle, Bottom	Align the selected components to the top, middle, or bottom of the reference component
	Align Left, Center, Right	Align the selected components to the left, middle, or right of the reference component
	Space Across	Evenly space the selected components across a horizontal axis, starting from the far left component and ending at the far right component
	Space Down	Evenly space the selected components across a vertical axis, starting from the top component and ending at the bottom component
	Same Width	Set the width of the selected components to the same width as the reference component
	Same Height	Set the height of the selected components to the same height as the reference component

	Same Size	Set the width and height of the selected components to the same width and height of the reference component

4.4.7.4 Advanced Actions toolbar

Only basic objects (lines, rectangles, ellipses) can be rotated and flipped.

Only objects from the Drawing Toolbar can be structured (grouped, ungrouped, forward, backward).

	Nudge Up, Down, Left, Right	Moves selected component one pixel upward, downward, left, right
	Rotate	Rotates selected component freely. Once selected, put your mouse cursor over the component and move the component clockwise or counter-clockwise depending on what you need.
	Rotate Left, Right	Rotates selected component 90 degrees counter-clockwise or clockwise
	Flip Vertical	Flips the selected component on the vertical axis
	Flip Horizontal	Flips the selected component on the horizontal axis
	Group, Ungroup	Combines all selected components into one combined entity. Ungroups them into separate components.
	Front, Back	Moves current components to the absolute front or back of all viewable layers
	Forward, Backward	Moves current components on layer higher or lower than its original layer hierarchy

L90 Line Current Differential System

Chapter 5: Settings

This chapter outlines front panel and/or software settings. The relay is not taken out of service when saving settings; the relay is taken out of service when a settings file is written to it.

Settings can be viewed remotely in a web browser by entering the IP address of the relay, accessing the **Device Information Menu** option, then the **Front-Panel Display Report** option.

When indicated that a restart is required for a setting change to take effect, use the **Maintenance > Reboot Relay Command** in the software.

Settings file conversion from previous firmware versions is supported. See the Maintenance chapter.

5.1 Settings menu

■■ SETTINGS ■■ PRODUCT SETUP	⇔	■ SECURITY ■	See page 5-8
⇩	⇕	■ DISPLAY ■ PROPERTIES	See page 5-27
	⇕	GRAPHICAL FRONT PANEL	Access in EnerVista See page 5-29
	⇕	■ CLEAR RELAY ■ RECORDS	See page 5-42
	⇕	■ COMMUNICATIONS ■	See page 5-43
	⇕	■ MODBUS USER MAP ■	See page 5-110
	⇕	■ REAL TIME ■ CLOCK	See page 5-110
	⇕	■ FAULT REPORTS ■	See page 5-115
	⇕	■ OSCILLOGRAPHY ■	See page 5-118

	⇕	■ DATA LOGGER ■	See page 5-120
	⇕	■ DEMAND ■	See page 5-122
	⇕	■ USER-PROGRAMMABLE ■ LEDS	See page 5-123
	⇕	■ USER-PROGRAMMABLE ■ SELF TESTS	See page 5-127
	⇕	■ CONTROL ■ PUSHBUTTONS	See page 5-128
	⇕	■ USER-PROGRAMMABLE ■ PUSHBUTTONS	See page 5-129
	⇕	■ FLEX STATE ■ PARAMETERS	See page 5-135
	⇕	■ USER-DEFINABLE ■ DISPLAYS	See page 5-136
⇧	⇧	■ INSTALLATION ■	See page 5-137
■■ REMOTE RESOURCES ■■	⇔	■ ■	Access in EnerVista See page 5-138
■■ SETTINGS ■■ SYSTEM SETUP	⇔	■ AC INPUTS ■	See page 5-139
⇩	⇕	■ POWER SYSTEM ■	See page 5-140
	⇕	■ SIGNAL SOURCES ■	See page 5-141
	⇕	■ 87L POWER SYSTEM ■	See page 5-144
	⇕	■ BREAKERS ■	See page 5-151
	⇕	■ SWITCHES ■	See page 5-156
	⇕	■ FLEXCURVES ■	See page 5-161
⇧	⇧	■ PHASOR MEASUREMENT ■ UNIT	See page 5-168
■■ SETTINGS ■■ FLEXLOGIC	⇔	■ FLEXLOGIC ■ EQUATION EDITOR	See page 5-211
⇩	⇕	■ FLEXLOGIC ■ TIMERS	See page 5-211
	⇕	■ FLEXELEMENTS ■	See page 5-211
⇧	⇧	■ NON-VOLATILE ■ LATCHES	See page 5-215
■■ SETTINGS ■■ GROUPED ELEMENTS	⇔	■ SETTING GROUP 1 ■	See page 5-217
⇩	⇕	■ SETTING GROUP 2 ■	

5

	⇕	■ SETTING GROUP 3 ■	
	⇕	■ SETTING GROUP 4 ■	
	⇕	■ SETTING GROUP 5 ■	
⇧	⇧	■ SETTING GROUP 6 ■	
■■ SETTINGS ■■ CONTROL ELEMENTS	⇔	■ TRIP BUS ■	See page 5-327
⇩	⇕	■ SETTING GROUPS ■	See page 5-329
	⇕	■ SELECTOR SWITCH ■	See page 5-331
	⇕	■ TRIP OUTPUT ■	See page 5-337
	⇕	■ UNDERFREQUENCY ■	See page 5-343
	⇕	■ OVERFREQUENCY ■	See page 5-344
	⇕	■ SYNCHROCHECK ■	See page 5-345
	⇕	■ DIGITAL ELEMENTS ■	See page 5-350
	⇕	■ DIGITAL COUNTERS ■	See page 5-353
	⇕	■ MONITORING ■ ELEMENTS	See page 5-355
	⇕	■ PILOT SCHEMES ■	See page 5-379
	⇕	■ AUTORECLOSE ■	See page 5-402
⇧	⇧	■ FREQUENCY RATE ■ OF CHANGE	See page 5-415
■■ SETTINGS ■■ INPUTS / OUTPUTS	⇔	■ CONTACT INPUTS ■	See page 5-416
⇩	⇕	■ VIRTUAL INPUTS ■	See page 5-418
	⇕	■ CONTACT OUTPUTS ■	See page 5-419
	⇕	■ VIRTUAL OUTPUTS ■	See page 5-423
	⇕	■ DIRECT INPUTS ■	See page 5-423
	⇕	■ DIRECT OUTPUTS ■	See page 5-424
⇧	⇧	■ RESETTING ■	See page 5-424

5

■■ SETTINGS ■■ TRANSDUCER I/O	⇔	■ DCMA INPUTS ■	See page 5-425
⇩	⇳	■ RTD INPUTS ■	See page 5-426
⇧	⇧	■ DCMA OUTPUTS ■	See page 5-428
■■ SETTINGS ■■ TESTING	⇔	TEST MODE FUNCTION: Disabled	Range: Disabled, Test-Blocked, Test See page 5-431
⇩	⇳	TEST MODE FORCING: On	Range: FlexLogic operand See page 5-432
	⇳	■ PMU ■ TEST VALUES	See page 5-432
	⇳	■ FORCE CONTACT ■ INPUTS	See page 5-433
	⇳	■ FORCE CONTACT ■ OUTPUTS	See page 5-434
⇧	⇧	■ CHANNEL TESTS ■	See page 5-435

5.2 Overview

5.2.1 Introduction to elements

For URs, the term *element* is used to describe a feature that is based around a comparator. The comparator is provided with an input (or set of inputs) that is tested against a programmed setting (or group of settings) to determine if the input is within the defined range that sets the output to logic 1, also referred to as *setting the flag*. A single comparator can make multiple tests and provide multiple outputs. For example, the time overcurrent comparator sets a pickup flag when the current input is above the setting and sets an operate flag when the input current has been at a level above the pickup setting for the time specified by the time-current curve settings. All comparators use analog actual values as the input.

NOTE

An exception to this rule is digital elements, which use logic states as inputs.

Elements are arranged into two classes, *grouped* and *control*. Each element classed as a grouped element is provided with six alternate sets of settings, in setting groups numbered 1 through 6. The performance of a grouped element is defined by the setting group that is active at a given time. The performance of a control element is independent of the selected active setting group.

The main characteristics of an element are shown on a logic diagram. This includes the inputs, settings, fixed logic, and the output operands generated. The previous chapter explains how to read a logic diagram, and the abbreviations used in a diagram are defined in the Abbreviations chapter.

Some settings are specified in per-unit (pu) calculated quantities:

pu quantity = (actual quantity) / (base quantity)

Where the current source is from a single current transformer (CT), the *base quantity* is the nominal secondary or primary current of the CT. Use the secondary current base to convert per-unit settings to/from a secondary current value, and use the primary current base to convert to/from a primary current value.

Where the current source is the sum of two or more CTs with different nominal primary current, the primary base quantity is the largest nominal primary current. For example, if CT1 = 300 / 5 A and CT2 = 100 / 1 A, then in order to sum these, CT2 is scaled to the CT1 ratio. In this case, the base quantity is 300 A primary, 5 A secondary for CT1, and 300/(100/1) = 3 A secondary for CT2.

For voltage elements, the primary base quantity is the nominal phase-to-phase primary voltage of the protected system provided that the VT ratio setting is set to the nominal ratio of the VTs and the secondary voltage setting is set to the phase-to-phase voltage seen by the relay when the voltage of the protected system in nominal. The UR uses the convention that nominal voltages in a three-phase system are phase-to-phase voltages.

For example, on a system with a 13.8 kV nominal primary voltage, the base quantity is 13800 V. With 14400:120 V delta-connected VTs, the secondary base quantity and secondary voltage setting is:

$$\frac{13800}{14400} \times 120 = 115 \text{ V} \qquad \textbf{Eq. 5-1}$$

For wye-connected VTs, the primary and secondary base quantities are as before, but the secondary voltage setting (here a phase-to-ground value) is:

$$\frac{13800}{14400} \times \frac{120}{\sqrt{3}} = 66.4 \text{ V} \qquad \textbf{Eq. 5-2}$$

Many settings are common to most elements, outlined as follows:

- **FUNCTION setting** — This setting programs the element to operate when selected as “Enabled.” The factory default is “Disabled.” Once “Enabled,” any element associated with the function becomes active and all options become available.
- **NAME setting** — This setting is used to uniquely identify the element.
- **SOURCE setting** — This setting is used to select the AC source to be monitored. See the Introduction to AC Sources section later.
- **PICKUP setting** — For simple elements, this setting is used to program the level of the measured parameter above or below which the pickup state is established. In more complex elements, a set of settings can be provided to define the range of the measured parameters that cause the element to pick up.
- **PICKUP DELAY setting** — This setting sets a time-delay-on-pickup, or on-delay, for the duration between the pickup and operate output states.
- **RESET DELAY setting** — This setting is used to set a time-delay-on-dropout, or off-delay, for the duration between the operate output state and the return to logic 0 after the input transits outside the defined pickup range.
- **BLOCK setting** — The default output operand state of all comparators is a logic 0 or “flag not set.” The comparator remains in this default state until a logic 1 is asserted at the RUN input, allowing the test to be performed. If the RUN input changes to logic 0 at any time, the comparator returns to the default state. The RUN input is used to supervise the comparator. The BLOCK input is used as one of the inputs to RUN control.
- **TARGET setting** — This setting is used to define the operation of an element target message. When set to "Disabled," no target message or illumination of a front panel LED indicator is issued upon operation of the element. When set to “Self-Reset,” the target message and LED indication follow the operate state of the element and self-resets once the operate element condition clears. When set to “Latched,” the target message and LED indication remains visible after the element output returns to logic 0 until a RESET command is received by the relay.
- **EVENTS setting** — This setting is used to control whether the pickup, dropout, or operate states are recorded by the event recorder. When set to “Disabled,” element pickup, dropout, or operate are not recorded as events. When set to “Enabled,” events are created for

  <Element> PKP (pickup)
  <Element> DPO (dropout)
  <Element> OP (operate)

  The DPO event is created when the measure and decide comparator output transits from the pickup state (logic 1) to the dropout state (logic 0). This can happen when the element is in the operate state if the reset delay time is not zero.

  Not every operand of a given element in a UR relay generates events, only the major output operands. Elements, asserting output per phase, log operating phase output only, without asserting the common three-phase operand event.

5.2.2 Introduction to AC sources

5.2.2.1 Background

The L90 can be used on systems with breaker-and-a-half or ring bus configurations.

In these applications, each of the two three-phase sets of individual phase currents (one associated with each breaker) can be used as an input to a breaker failure element. The sum of both breaker phase currents and 3I_0 residual currents can be required for the circuit relaying and metering functions. Two separate synchrocheck elements can be programmed to check synchronization between two different buses VT and the line VT. These requirements can be satisfied with a single L90, equipped with sufficient CT and VT input channels, by selecting proper parameter to measure. A mechanism is provided to specify the AC parameter (or group of parameters) used as the input to protection/control comparators and some metering elements. Selection of the measured parameters is partially performed by the design of a measuring element or protection/control comparator by identifying the measured parameter type (fundamental frequency phasor, harmonic phasor, symmetrical component, total waveform RMS magnitude, phase-phase or phase-ground voltage, and so on). The user completes the process by selecting the instrument transformer input channels to use and some parameters calculated from these channels. The input parameters available include the summation of currents from multiple input channels. For the summed currents of phase, 3I_0, and ground current, current from CTs with different ratios are adjusted to a single ratio before summation. A mechanism called a source configures the routing of CT and VT input channels to measurement sub-systems.

Sources, in the context of L90 relays, refer to the logical grouping of current and voltage signals such that one source contains all the signals required to measure the load or fault in a particular power apparatus. A given source can contain all or some of the following signals: three-phase currents, single-phase ground current, three-phase voltages and an auxiliary voltages from a single-phase VT for checking for synchronism.

To illustrate the concept of Sources, as applied to current inputs only, consider the breaker-and-a-half scheme shown. Some protection elements, like breaker failure, require individual CT current as an input. Other elements, like distance, require the sum of both current as an input. The line differential function requires the CT currents to be processed individually to cope with a possible CT saturation of one CT during an external fault on the upper bus. The current into protected line is the phasor sum (or difference) of the currents in CT1 and CT2, depending on the current distribution on the upper bus.

Figure 5-1: Breaker-and-a-half scheme

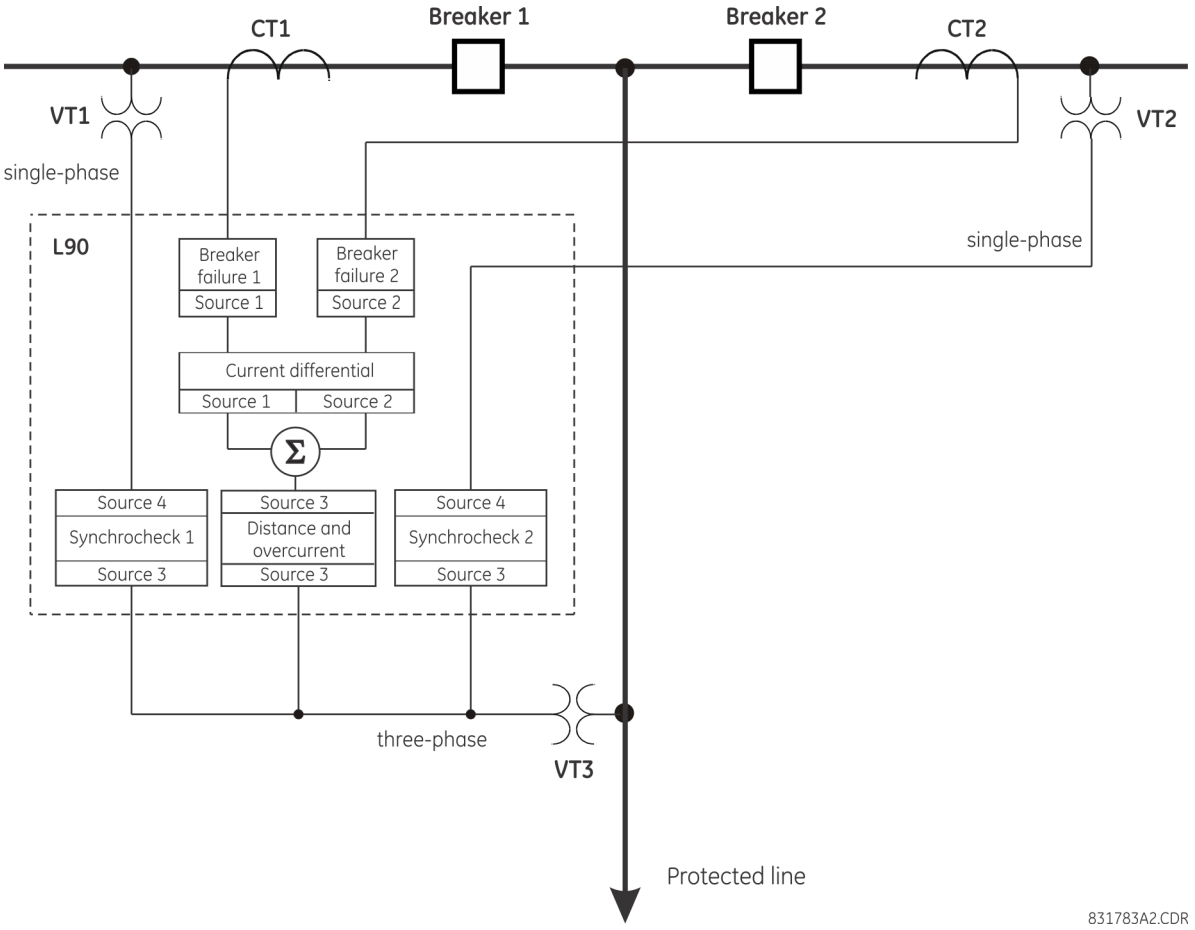

In conventional analog or electronic relays, the sum of the currents is obtained from an appropriate external connection of all CTs through which any portion of the current for the element being protected could flow. Auxiliary CTs are required to perform ratio matching if the ratios of the primary CTs to be summed are not identical. In the L90, provisions have been included for all the current signals to be brought to the device where grouping, CT ratio correction, and summation are applied internally via configuration settings. Up to four currents can be brought into the L90; current summation and CT ratio matching is performed internally. A major advantage of internal summation is that individual currents are available to the protection device (for example, as additional information to apply a restraint current properly, or to allow the provision of additional features that operate on the individual currents, such as breaker failure). Given the flexibility of this approach, it becomes necessary to add configuration settings to the platform to allow the user to select which sets of CT inputs are added to form the net current into the protected device. The internal grouping of current and voltage signals forms an internal source. This source can be assigned a specific name and becomes available to protection and metering elements in the relay. Individual names can be given to each source to identify them for later use. For example, in the scheme shown, three different sources are be configured as inputs for separate elements:

- Source 1 — CT1 current, for the breaker failure 1 element and first current source for the line differential element
- Source 2 — CT2 current, for breaker failure 2 element and second current source for the line differential element
- Source 3 — The sum of the CT1 and CT2 currents for the distance function

In addition, two separate synchrocheck elements can be programmed to check synchronization between line voltage and two different bus voltages (SRC3–SRC1 and SRC3–SRC2).

5.2.2.2 CT/VT module configuration

CT and voltage transformer (VT) input channels are contained in CT/VT modules. The type of input channel can be phase/neutral/other voltage, phase/ground current, or sensitive ground current. The CT/VT modules calculate total waveform RMS levels, fundamental frequency phasors, symmetrical components, and harmonics for voltage or current, as allowed by the hardware in each channel. These modules can calculate other parameters as directed by the CPU module.

A CT/VT module contains up to eight input channels, numbered 1 through 8. The channel numbering corresponds to the module terminal numbering 1 through 8 and is arranged as follows. Channels 1, 2, 3, and 4 are always provided as a group, hereafter called a "bank," and all four are either current or voltage, as are channels 5, 6, 7, and 8. Channels 1, 2, 3 and 5, 6, 7 are arranged as phase A, B, and C respectively. Channels 4 and 8 are either another current or voltage.

Banks are ordered sequentially from the block of lower-numbered channels to the block of higher-numbered channels, and from the CT/VT module with the lowest slot position letter to the module with the highest slot position letter, as follows.

Increasing slot position letter -->		
CT/VT module 1	**CT/VT module 2**	**CT/VT module 3**
< bank 1 >	< bank 3 >	< bank 5 >
< bank 2 >	< bank 4 >	< bank 6 >

The UR platform allows for a maximum of six sets of three-phase voltages and six sets of three-phase currents. The result of these restrictions leads to the maximum number of CT/VT modules in a chassis to three. The maximum number of sources is six. A summary of CT/VT module configurations is as follows.

Item	**Maximum number**
CT/VT Module	2
CT Bank (3 phase channels, 1 ground channel)	2
VT Bank (3 phase channels, 1 auxiliary channel)	2

5

5.2.2.3 CT/VT input channel configuration

Upon relay startup, configuration settings for every bank of current or voltage input channels in the relay are generated automatically from the order code. Within each bank, a channel identification label is assigned automatically to each bank of channels in a given product. The *bank* naming convention is based on the physical location of the channels, required by the user to know how to connect the relay to external circuits. Bank identification consists of the letter designation of the slot in which the CT/VT module is mounted as the first character, followed by numbers indicating the channel, either 1 or 5. See the HardFiber instruction manual for designations of HardFiber voltage and current banks.

For three-phase channel sets, the number of the lowest numbered channel identifies the set. For example, F1 represents the three-phase channel set of F1/F2/F3, where F is the slot letter and 1 is the first channel of the three channels.

Upon startup, the CPU configures the settings required to characterize the current and voltage inputs, and it displays them in the appropriate section in the sequence of the banks (as described earlier) as follows for a maximum configuration: F1, F5, L1, L5, S1, and S5.

5.3 Product setup

5.3.1 Security

5.3.1.1 Security overview

The following security features are available:

- Password security — Basic security present by default
- EnerVista security — Role-based access to various EnerVista software screens and configuration elements. The feature is present by default in the EnerVista software.

- CyberSentry security — Advanced security available using a software option. When purchased, the option is automatically enabled, and the default Password security and EnerVista security are disabled.

Lost password

If all passwords are lost, reset the unit to default values. Follow the instructions outlined later for **COMMANDS ⇨⇩ RELAY MAINTENANCE ⇨ SERVICE COMMAND**. Note that the relay is reset to default values, not just the passwords.

Then for CyberSentry, change the default password of ChangeMe1# as outlined in the Set Up CyberSentry and Change Default Password section at the end of the Installation chapter.

Password requirements

A user account requires an alpha-numeric password that meets the following requirements:

- Password is case-sensitive
- Password cannot contain the user account name or parts of the user account that exceed two consecutive characters
- Password must be 8 to 20 characters in length
- Password must contain characters from all of the following categories:
  - English uppercase characters (A through Z)
  - English lowercase characters (a through z)
  - Base 10 digits (0 through 9)
  - Non-alphabetic characters (for example, ~, !, @, #, $,%, &)

5.3.1.2 Password security

SETTINGS ⇨ PRODUCT SETUP ⇨ SECURITY

■ **SECURITY** ■	⇔	**ACCESS LEVEL:** **Restricted**	Range: Restricted, Command, Setting, Factory Service (for factory use only)
	⇩	■ **CHANGE LOCAL** ■ **PASSWORDS**	See page 5-11
	⇩	■ **CHANGE REMOTE** ■ **PASSWORDS**	See page 5-11
	⇩	■ **ACCESS** ■ **SUPERVISION**	See page 5-12
	⇩	■ **DUAL PERMISSION** ■ **SECURITY ACCESS**	See page 5-13
	⇧	**PASSWORD ACCESS** **EVENTS: Disabled**	Range: Disabled, Enabled

The L90 supports password entry from a local or remote connection.

Local access is defined as access to settings or commands via the front panel. This includes both keypad entry and the RS232 port. Remote access is defined as access to settings or commands via any rear communications port. This includes both Ethernet and RS485 connections. Any change to the local or remote password enables this functionality.

NOTE

For a relay without a CyberSentry software option, any user can activate the **RESET** button or Reset/Acknowledge an alarm in the Graphical Front Panel Annunciator without password entry.

ACCESS LEVEL — The "Restricted" option means that settings and commands can be accessed, but there is no access to factory configuration. Access automatically reverts to the Restricted level according to the access level timeout setting values. The access level is set to Restricted when control power is cycled.

The "Factory Service" level is not available and intended for factory use only.

There are two user security access levels, setting and command, for which you can set a password for each. Use of a password for each level controls whether users can enter commands or change settings. Another option is to specify setting and/or command access for individual user accounts.

- **Setting** — Allows the user to make any changes to any of the setting values:
  - Changing any setting
  - Test mode operation
- **Command** — Restricts the user from making any settings changes, but allows the user to perform the following operations:
  - Operating the breakers via front panel keypad
  - Changing the state of virtual inputs
  - Clearing the event records
  - Clearing the oscillography records
  - Clearing fault reports
  - Changing the date and time
  - Clearing the breaker arcing current
  - Clearing energy records
  - Clearing the data logger
  - Clearing the user-programmable pushbutton states

When entering a settings or command password via EnerVista or any serial interface, the user must enter the corresponding connection password. If the connection is to the back of the L90, the remote password must be used. If the connection is to the RS232 port of the front panel, the local password must be used.

The local setting and command sessions are initiated by the user through the front panel display and are disabled either by the user or by timeout (via the setting and command level access timeout settings). The remote setting and command sessions are initiated by the user through the EnerVista software and are disabled either by the user or by timeout.

The state of the session (local or remote, setting or command) determines the state of the following FlexLogic operands:

- ACCESS LOC SETG OFF — Asserted when local setting access is disabled
- ACCESS LOC SETG ON — Asserted when local setting access is enabled
- ACCESS LOC CMND OFF — Asserted when local command access is disabled
- ACCESS LOC CMND ON — Asserted when local command access is enabled
- ACCESS REM SETG OFF — Asserted when remote setting access is disabled
- ACCESS REM SETG ON — Asserted when remote setting access is enabled
- ACCESS REM CMND OFF — Asserted when remote command access is disabled
- ACCESS REM CMND ON — Asserted when remote command access is enabled

NOTE

A command or setting write operation is required to update the state of the remote and local security operands listed.

When a setting password or command password is set or updated, user access with a graphical front panel is removed. Simply log in again on the graphical front panel.

When the setting password is set or updated, the graphical front panel Access Level displays as Command. This is because the graphical front panel is a Modbus client and it does not have automatic access to the password change.

PASSWORD ACCESS EVENTS — This setting allows recording of password access events in the event recorder.

Change local passwords

SETTINGS ⇨ PRODUCT SETUP ⇨ SECURITY ⇨⇩ CHANGE LOCAL PASSWORDS

■ CHANGE LOCAL ■ PASSWORDS	⇔	CHANGE SETTING PASSWORD: No	Range: No, Yes
	⇧	CHANGE COMMAND PASSWORD: No	Range: No, Yes

As outlined in the previous section, there are two user security access levels, setting and command. Use of a password for each level controls whether users can enter commands or change settings.

Proper password codes are required to enable each access level. When a **CHANGE COMMAND PASSWORD** or **CHANGE SETTING PASSWORD** setting is programmed to "Yes" via the front panel interface, the following message sequence is invoked:

1. ENTER NEW PASSWORD: _____.
2. VERIFY NEW PASSWORD: _____.
3. NEW PASSWORD HAS BEEN STORED.

To gain write access to a "Restricted" setting, program the **ACCESS LEVEL** setting in the main security menu to "Setting" and then change the setting, or attempt to change the setting and follow the prompt to enter the programmed password. If the password is correctly entered, access is allowed. Access automatically reverts to the "Restricted" level according to the access level timeout setting values and when power is cycled.

NOTE

If the setting and command passwords are identical, then this one password allows access to both commands and settings.

If a remote connection is established, local passcodes are not visible.

5

Change remote passwords

Proper passwords are required to enable each command or setting level access, which are explained in the previous section.

SETTINGS ⇨ PRODUCT SETUP ⇨ SECURITY ⇨⇩ CHANGE REMOTE PASSWORDS

■ CHANGE REMOTE ■ PASSWORDS	⇔	CHANGE SETTING PASSWORD: No	Range: No, Yes
	⇧	CHANGE COMMAND PASSWORD: No	Range: No, Yes

To set the command or setting password in EnerVista:

1. In the EnerVista software or from the front panel, navigate to **Settings > Product Setup > Security** menu item to open the remote password settings window.
2. Click the command or setting password **Change** button.
3. Enter the new password in the **New Password** field. Requirements are outlined in the Password Requirements section earlier in this chapter. When an original password has already been used, enter it in the **Enter Password** field and click the **Send Password to Device** button.
4. Re-enter the password in the **Confirm Password** field.

5. Click the **OK** button. The password is checked to ensure that it meets requirements.

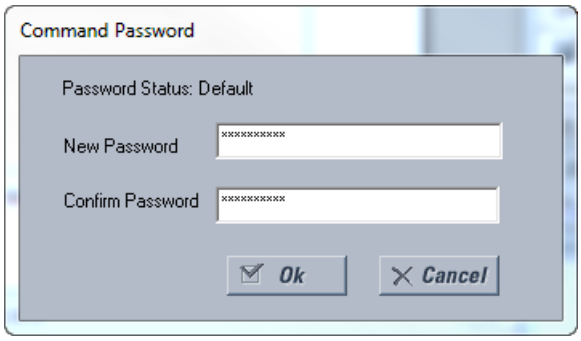

NOTE

If you establish a local (serial) connection to the relay, you cannot view remote passcodes.

Access supervision

SETTINGS ⇨ PRODUCT SETUP ⇨ SECURITY ⇨⇩ ACCESS SUPERVISION

■ ACCESS ■ SUPERVISION	⇔	■ ACCESS LEVEL ■ TIMEOUTS	See below
	⇩	INVALID ATTEMPTS BEFORE LOCKOUT: 3	Range: 2 to 5 in steps of 1
	⇧	PASSWORD LOCKOUT DURATION: 5 min	Range: 5 to 60 minutes in steps of 1

This menu displays when the **ACCESS LEVEL** setting is other than Restricted or Command.

The following access supervision settings are available.

INVALID ATTEMPTS BEFORE LOCKOUT — This setting specifies the number of times that an incorrect password can be entered within a three-minute time span before lockout occurs. When lockout occurs, the LOCAL ACCESS DENIED or REMOTE ACCESS DENIED FlexLogic operands are set to "On." These operands are returned to the "Off" state upon expiration of the lockout.

PASSWORD LOCKOUT DURATION — This setting specifies the time that the L90 locks out password access after the number of invalid password entries specified by the **INVALID ATTEMPTS BEFORE LOCKOUT** setting has occurred.

The L90 provides a means to raise an alarm upon failed password entry. If password verification fails while accessing a password-protected level of the relay (either settings or commands), the UNAUTHORIZED ACCESS FlexLogic operand is asserted. The operand can be programmed to raise an alarm via contact outputs or communications. This feature can be used to protect against both unauthorized and accidental access attempts.

The UNAUTHORIZED ACCESS operand is reset with the **COMMANDS ⇨⇩ CLEAR RECORDS ⇨⇩ RESET UNAUTHORIZED ALARMS** command. Therefore, to apply this feature with security, password-protect the Command level. The operand does not generate events or targets.

If events or targets are required, the UNAUTHORIZED ACCESS operand can be assigned to a digital element programmed with event logs or targets enabled.

The following table outlines access level timeout settings.

SETTINGS ⇨ PRODUCT SETUP ⇨ SECURITY ⇨⇩ ACCESS SUPERVISION ⇨⇩ ACCESS LEVEL TIMEOUTS

■ ACCESS LEVEL ■ TIMEOUTS	⇔	COMMAND LEVEL ACCESS TIMEOUT: 5 min	Range: 5 to 480 minutes in steps of 1
	⇧	SETTING LEVEL ACCESS TIMEOUT: 30 min	Range: 5 to 480 minutes in steps of 1

These settings allow the user to specify the length of inactivity required before returning to the Restricted access level. Note that the access level is set to Restricted when control power is cycled.

COMMAND LEVEL ACCESS TIMEOUT — This setting specifies the length of inactivity (no local or remote access) required to return to Restricted access from the Command password level.

SETTING LEVEL ACCESS TIMEOUT — This setting specifies the length of inactivity (no local or remote access) required to return to Restricted access from the Settings password level.

Dual permission security access

SETTINGS ⇨ PRODUCT SETUP ⇨ SECURITY ⇨⇩ DUAL PERMISSION SECURITY ACCESS

■ DUAL PERMISSION ■ SECURITY ACCESS	⇔	**LOCAL SETTING AUTH: On**	Range: selected FlexLogic operands (see below)
	⇩	**REMOTE SETTING AUTH: On**	Range: FlexLogic operand
	⇧	**ACCESS AUTH TIMEOUT: 30 min**	Range: 5 to 480 minutes in steps of 1

This menu displays when the **ACCESS LEVEL** setting is other than Restricted or Command.

This feature provides a mechanism to prevent unauthorized or unintended upload of settings to a relay through the local or remote interface.

The following settings are available through the local (front panel) interface only.

- **LOCAL SETTING AUTH** — This setting is used for local (front panel or RS232 interface) setting access supervision. Valid values for the FlexLogic operands are either “On” (default) or any physical “Contact Input ~~ On” value.

  If this setting is “On,“ then local setting access functions as normal; that is, a local setting password is required. If this setting is any contact input on FlexLogic operand, then the operand must be asserted (on) prior to providing the local setting password to gain setting access.

  If setting access is *not* authorized for local operation (front panel or RS232 interface) and the user attempts to obtain setting access, then the UNAUTHORIZED ACCESS message displays on the front panel.

  If this setting is "Off," firmware upgrades are blocked. If this setting is "On," firmware upgrades are allowed.
- **REMOTE SETTING AUTH** — This setting is used for remote (Ethernet or RS485 interface) setting access supervision.

  If this setting is “On” (the default setting), then remote setting access functions as normal; that is, a remote password is required. If this setting is “Off,” then remote setting access is blocked even if the correct remote setting password is provided. If this setting is any other FlexLogic operand, then the operand must be asserted (set as on) prior to providing the remote setting password to gain setting access.

  If this setting is "Off," firmware upgrades are blocked. If this setting is "On," firmware upgrades are allowed.
- **ACCESS AUTH TIMEOUT** — This setting represents the timeout delay for local setting access. This setting is applicable when the **LOCAL SETTING AUTH** setting is programmed to any operand except “On.” The state of the FlexLogic operand is monitored continuously for an off-to-on transition. When this occurs, local access is permitted and the timer programmed with the **ACCESS AUTH TIMEOUT** setting value is started. When this timer expires, local setting access is immediately denied. If access is permitted and an off-to-on transition of the FlexLogic operand is detected, the timeout is restarted. The status of this timer updates every five seconds.

The following settings are available through the remote (EnerVista UR Setup) interface only. Select the **Settings > Product Setup > Security** menu item to display the security settings window.

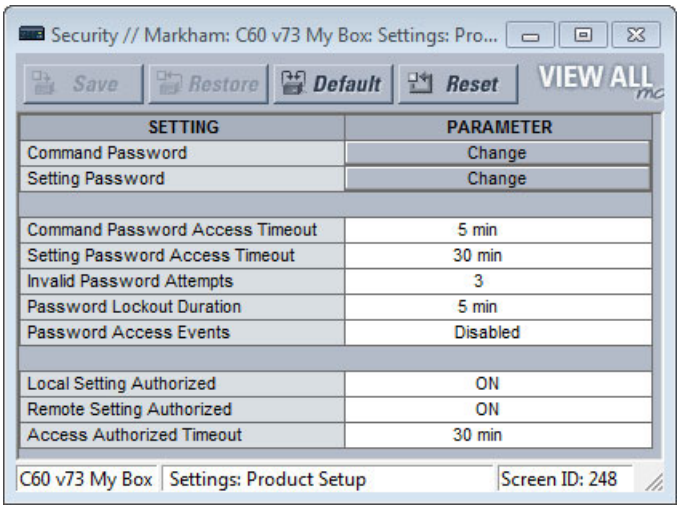

SETTING	PARAMETER
Command Password	Change
Setting Password	Change
Command Password Access Timeout	5 min
Setting Password Access Timeout	30 min
Invalid Password Attempts	3
Password Lockout Duration	5 min
Password Access Events	Disabled
Local Setting Authorized	ON
Remote Setting Authorized	ON
Access Authorized Timeout	30 min

The **Remote Settings Authorized** setting is used for remote (Ethernet or RS485 interface) setting access supervision. If this setting is "On" (the default setting), then remote setting access functions as normal; that is, a remote password is required. If this setting is "Off," then remote setting access is blocked even if the correct remote setting password is provided. If this setting is any other FlexLogic operand, then the operand must be asserted (on) prior to providing the remote setting password to gain setting access.

The **Access Authorized Timeout** setting represents the timeout delay remote setting access. It applies when the **Remote Settings Authorized** setting is programmed to any operand except "On" or "Off." The state of the FlexLogic operand is continuously monitored for an off-to-on transition. When this occurs, remote setting access is permitted, and the timer programmed with the **Access Authorized Timeout** setting value is started. When this timer expires, remote setting access is denied immediately. If access is permitted and an off-to-on transition of the FlexLogic operand is detected, the timeout is restarted. The status of this timer updates every five seconds.

5.3.1.3 EnerVista security

Enable the security management system

Access to files is controlled by the operating system and EnerVista software as follows:

- Access privileges to files are defined by the Windows operating system. A standard user does not have access to a file created by an administrator or another user.
- When the EnerVista UR Setup software security system is disabled (passwords are not required), all users have administrator access

The EnerVista security system allows an administrator to manage access privileges of multiple users of EnerVista. It is disabled by default to allow access to the device immediately after installation. When security is disabled, all users have administrator access. GE recommends enabling the EnerVista security before placing the device in service.

To enable the security system and require password use:

1. Select the **Security > User Management** menu to open the user management window.

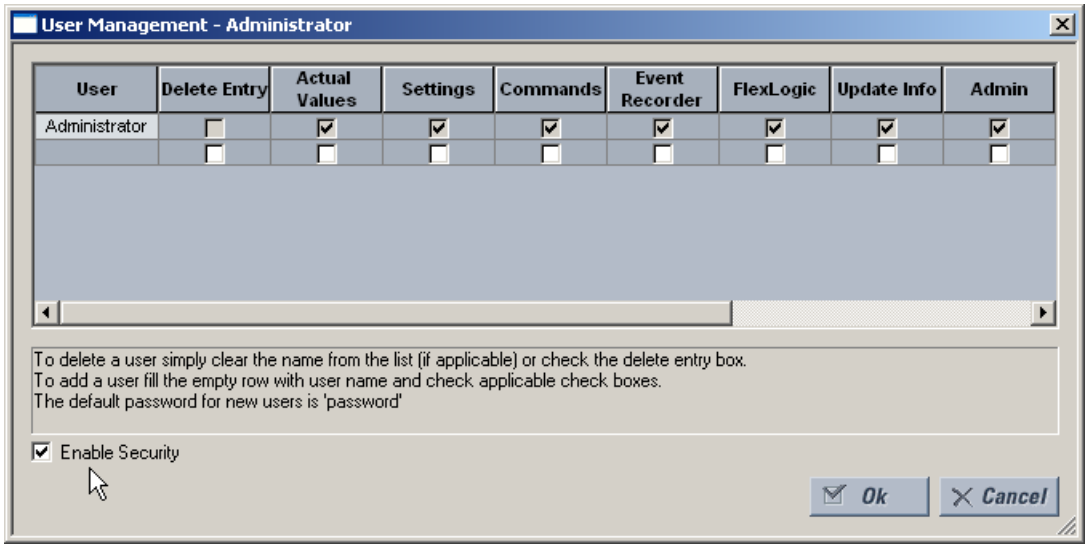

2. Enable the **Enable Security** check box in the lower-left corner to enable the security management system.
3. Click the **Ok** button.

NOTE

If you force password entry using this feature, ensure that you know the Administrator password. If you do not know the password and are locked out of the software, reset the device to factory defaults as outlined later for **COMMANDS ⇨⇩ RELAY MAINTENANCE ⇨ SERVICE COMMAND**. When using CyberSentry, the default password is "ChangeMe1#".

Security is now enabled for the EnerVista UR Setup software. Upon starting the software, users are now required to enter a username and password.

Add a new user

The following pre-requisites are required to add user accounts to the EnerVista security management system:

- The user adding the account must have administrator rights
- The EnerVista security management system must be enabled (previous section)

To add a user account:

1. Select the **Security > User Management** item from the top menu to open the user management window.
2. Enter a username in the **User** field. The username must be four to 20 characters in length.

3. Select the user access rights by enabling the check box of one or more fields.

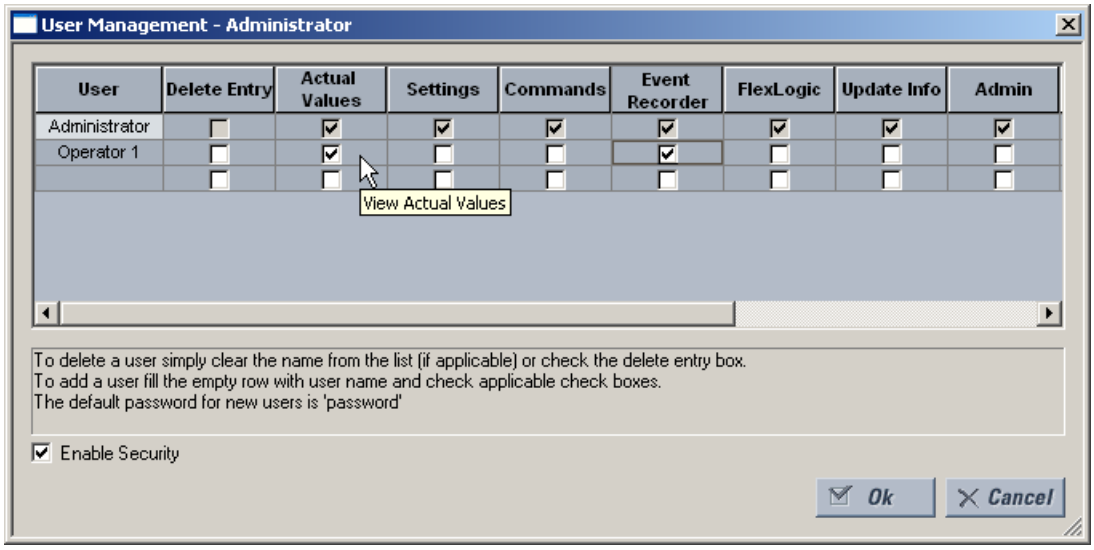

The table outlines access rights.

Table 5-1: Access rights summary

Field	Description
Delete Entry	Deletes the user account when exiting the user management window
Actual Values	Allows the user to read **Actual Values**
Settings	Allows the user to read **Settings** values
Commands	Allows the user to execute **Commands**
Event Recorder	Allows the user to use the **Event Recorder**
FlexLogic	Allows the user to read **FlexLogic** values
Update Info	Allows the user to write to any function to which they have read privileges. When any of the **Settings**, **Event Recorder**, and **FlexLogic** check boxes are enabled by themselves, the user is granted read access. When any of them are enabled in conjunction with the **Update Info** box, they are granted read and write access. The user is not granted write access to functions that are not enabled, even if the **Update Info** field is enabled.
Admin	When the check box is enabled, the user becomes an EnerVista UR Setup administrator and has all administrative rights. Exercise caution when granting administrator rights.

4. Click **OK** to add the user account to the system.

Modify user privileges

The following pre-requisites are required to modify user privileges in the EnerVista security management system:

- The user modifying the privileges must have administrator rights
- The EnerVista security management system must be enabled (the **Enable Security** check box enabled)

To modify user privileges:

1. Select the **Security > User Management** item from the top menu to open the user management window.
2. Locate the username in the **User** field.

3. Modify the user access rights by enabling or disabling one or more of the check boxes.

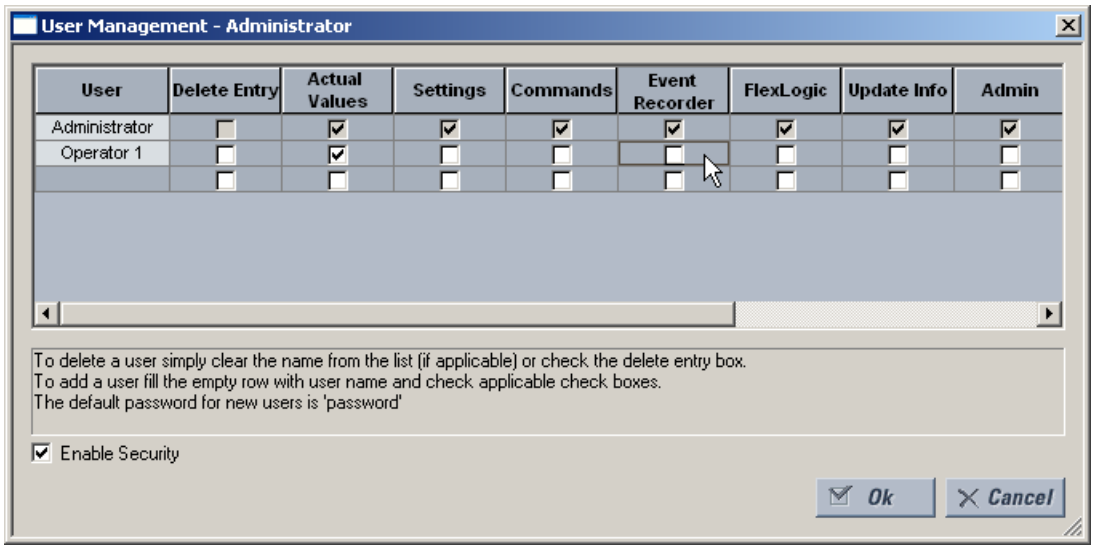

The table outlines access rights.

Table 5-2: Access rights summary

Field	Description
Delete Entry	Deletes the user account when exiting the user management window
Actual Values	Allows the user to read actual values
Settings	Allows the user to read setting values
Commands	Allows the user to execute commands
Event Recorder	Allows the user to use the digital fault recorder
FlexLogic	Allows the user to read FlexLogic values
Update Info	Allows the user to write to any function to which they have read privileges. When any of the **Settings**, **Event Recorder**, and **FlexLogic** check boxes are enabled by themselves, the user is granted read access. When any of them are enabled in conjunction with the **Update Info** box, they are granted read and write access. The user is not granted write access to functions that are not enabled, even if the **Update Info** field is enabled.
Admin	When this check box is enabled, the user becomes an EnerVista UR Setup administrator and has all administrative rights. Exercise caution when granting administrator rights.

4. Click **OK** to save the changes.

5.3.1.4 CyberSentry security

SOFTWARE OPTION

This feature requires a CyberSentry software option. See the Order Codes section in chapter 2 for details.

The EnerVista software provides the means to configure and authenticate the L90 access using either a server or the device. Access to functions depends on user role.

The login screen of EnerVista has two options for access to the L90, these being Server and Device authentication.

Figure 5-2: Login screen for CyberSentry

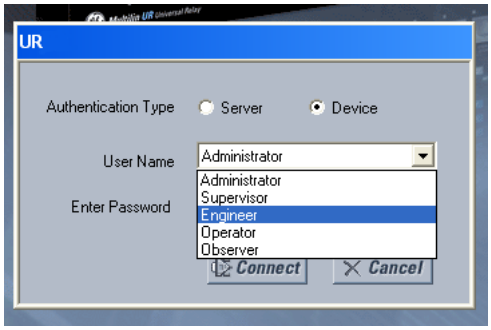

When the "Server" **Authentication Type** is selected, the L90 uses the RADIUS server and not its local authentication database to authenticate the user.

When the "Device" button is selected, the L90 uses its local authentication database and not the RADIUS server to authenticate the user. In this case, it uses built-in roles (Administrator, Engineer, Supervisor, Operator, Observer, or Administrator and Supervisor when Device Authentication is disabled), as login accounts and the associated passwords are stored on the L90 device. In this case, access is not user-attributable. In cases where user-attributable access is required, especially for auditable processes for compliance reasons, use server authentication (RADIUS) only.

No password or security information is displayed in plain text by the EnerVista software or the UR device, nor are they ever transmitted without cryptographic protection.

5

NOTE

Only (TCP/UDP) ports and services that are needed for device configuration and for customer enabled features are open. All the other ports are closed. For example, Modbus is on by default, so its TCP port 502, is open. But if Modbus is disabled, port 502 is closed. This function has been tested and no unused ports have been found open.

When CyberSentry is enabled, Modbus communications over Ethernet is encrypted, which is not always tolerated by SCADA systems. The UR has a bypass access feature for such situations, which allows unencrypted Modbus over Ethernet. The **Bypass Access** setting is available on the **SETTINGS ⇨ PRODUCT SETUP ⇨ SECURITY ⇨⇩ SUPERVISORY** screen. Note that other protocols (DNP, 101, 103, 104, EGD) are not encrypted, and they are good communications options for SCADA systems when CyberSentry is enabled.

When using the rear RS485 port and CyberSentry, registers can be read with a maximum buffer of 64 bytes. Settings may not be written, so use another port or configure the **SERIAL INACTIVITY TIMEOUT** setting to a high value, such as eight minutes, to give the relay enough time to finish the task.

CyberSentry settings through EnerVista

CyberSentry security settings are configured under **Device > Settings > Product Setup > Security**.

Figure 5-3: Security panel when CyberSentry installed

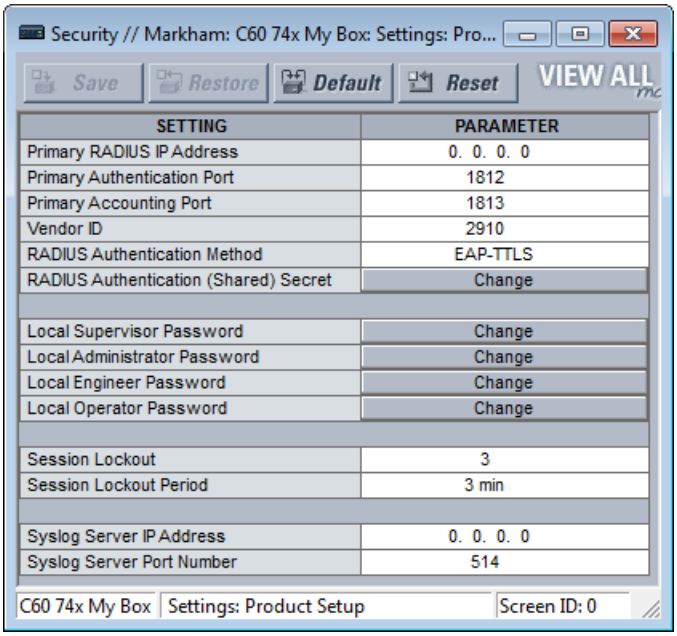

For the **Device > Settings > Product Setup > Supervisory** option, the panel looks like the following.

Figure 5-4: Supervisory panel

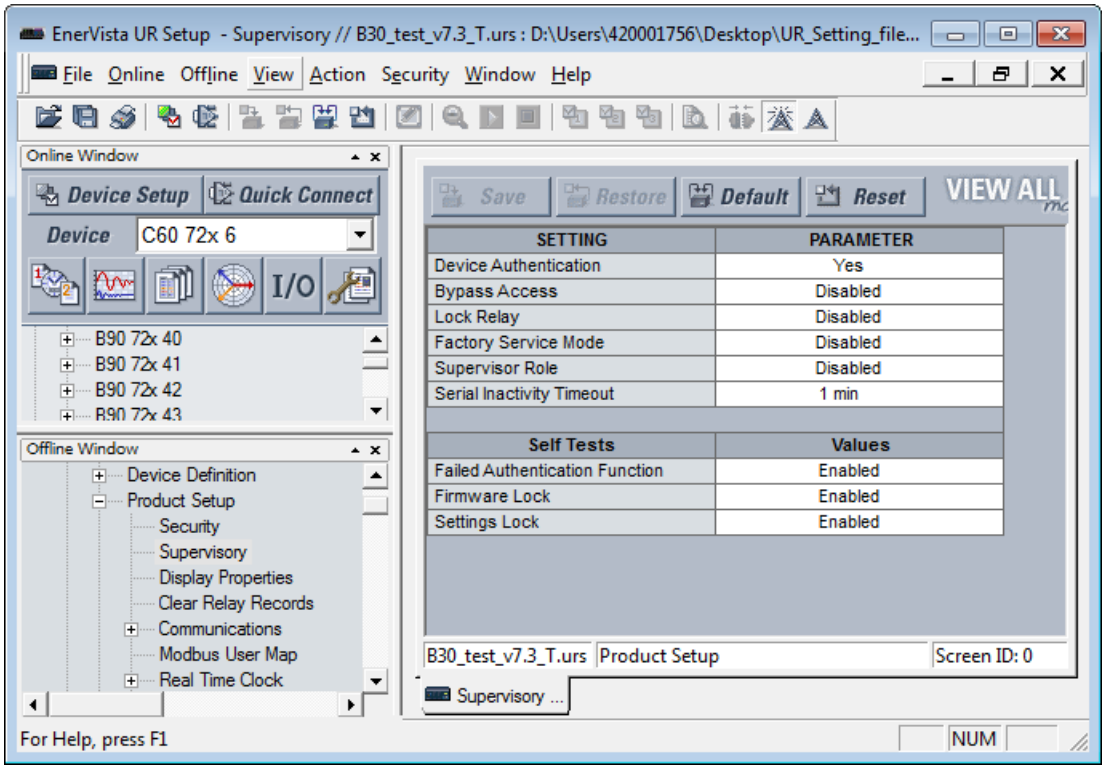

For the Security panel, the following settings are available.

Table 5-3: RADIUS server settings

Setting name	Description	Minimum	Maximum	Default	Units	Minimum permission
Primary RADIUS IP Address	IP address of the main RADIUS server. Default value indicates no Primary RADIUS server is configured, and hence RADIUS is disabled. Restart the relay for any change to take effect.	0.0.0.0	223.255.255.254	0.0.0.0	-	Administrator
Primary Authentication Port	RADIUS authentication port	1	65535	1812	-	Administrator
Primary Accounting Port	RADIUS accounting port	1	65535	1813	-	Administrator
Vendor ID	An identifier that specifies RADIUS vendor-specific attributes used with the protocol			Value that represents General Electric		Administrator
RADIUS Authentication Method	Authentication method used by RADIUS server	EAP-TTLS	PAP	EAP-TTLS	-	Administrator
RADIUS Authentication (Shared) Secret	Shared secret used in authentication. It displays as asterisks. This setting must meet the CyberSentry password requirements.	See the Password Requirements section earlier in this chapter	See the following password section for requirements	N/A	-	Administrator
Confirm RADIUS Authentication (Shared) Secret	Confirmation of the shared secret. The entry displays as asterisks.	See the Password Requirements section	245 characters	N/A	-	Administrator

5

Table 5-4: General security settings

Setting name	Description	Minimum	Maximum	Default	Units	Minimum permission
Session Lockout	Number of failed authentications before the device blocks subsequent authentication attempts for the lockout period	0 (lockout disabled)	99	3	-	Administrator
Session Lockout Period	The period in minutes that a user is prevented from logging in after being locked out	0 (no period)	9999	3	min	Administrator
Syslog Server IP Address	The IP address of the target Syslog server to which all security events are transmitted	0.0.0.0	223.255.255.254	0.0.0.0	-	Administrator
Syslog Server Port Number	The UDP port number of the target syslog server to which all security events are transmitted	1	65535	514	-	Administrator
Device Authentication	When enabled, local Device authentication with roles is allowed. When disabled, the UR only authenticates to the AAA server (RADIUS). **NOTE:** Administrator and Supervisor (if still enabled) remain active even after Device authentication is disabled. The only permission for local Administrator is to re-enable Device authentication when Device authentication is disabled. To re-enable Device authentication, the Supervisor unlocks the device for setting changes, and then the Administrator can re-enable Device authentication.	Disabled	Enabled	Enabled	-	Administrator

Setting name	Description	Minimum	Maximum	Default	Units	Minimum permission
Firmware Lock (via Lock Relay)	Indicates if the device receives firmware upgrades. If Enabled and the firmware upgrade attempt is made, the device denies the upgrade and displays an error message that the lock is set. On each firmware upgrade, this setting goes back to the default. The Lock Relay setting blocks settings and firmware updates.	Disabled	Enabled	Enabled	-	Administrator
Factory Service Mode	When enabled, the device can go into factory service mode. To enable, Supervisor authentication is necessary.	Disabled	Enabled	Disabled	-	Supervisor (Administrator when Supervisor is disabled)
Restore to Defaults	Sets the device to factory defaults	No	Yes	No	-	Administrator
Supervisor Role	When enabled, the Supervisor role is active. To enable, Administrator authentication is necessary. When disabled, the Supervisor role is inactive. To disable, Supervisor authentication is necessary.	Disabled	Enabled	Enabled	-	Administrator to enable and Supervisor to disable
RADIUS user names	Ensures that RADIUS user names are not the same as local/device role names	See RADIUS server documents	See RADIUS server document s		-	Administrator
Password	Local/device roles except for Observer are password-protected. All RADIUS users are password-protected.	See the Password Requirements section earlier in this chapter	See the following password section for requireme nts	Change Me1#	Text	The specified role and Administrator, except for Supervisor, where it is only itself

5

Table 5-5: Security alarm settings

Setting name	Description / Details	Min	Max	Default	Units	Minimum permissions
Failed Authentications	A threshold number indicating when an alarm is set off to indicate too many failed authentication attempts	Disabled	Enabled	Enabled	-	Administrator
Firmware Lock	A value indicating if the device can receive a firmware upgrade. If Enabled and a firmware upgrade attempt is made, the device alarm activates. If Disabled, the device alarm does not activate. On each firmware upgrade this setting goes back to the default.	Disabled	Enabled	Enabled	-	Administrator
Settings Lock	A value indicating if the device can accept any settings changes. If Enabled and a settings change attempt is made, the device alarm activates. If Disabled, the device alarm does not activate.	Disabled	Enabled	Enabled	-	Supervisor (Administrator if Supervisor has been disabled)

CyberSentry settings through the front panel

SETTINGS ⇨ PRODUCT SETUP ⇨ SECURITY

■ SECURITY ■	⇔	LOGIN: None	Range: Administrator, Engineer, Supervisor, Operator, Factory (for factory use only), None
	⇕	■ CHANGE DEVICE ■ PASSWORD	See page 5-22
	⇕	■ SESSION ■ SETTINGS	See page 5-23

⇕	■ **RESTORE DEFAULTS** ■	See page 5-23
⇕	■ **SUPERVISORY** ■	See page 5-23
⇕	**SYSLOG IP ADDRESS:** **0.0.0.0**	Range: 0.0.0.0, 255.255.255.255
⇧	**SYSLOG PORT NUMBER:** **514**	Range: 1 to 65535

LOGIN — This setting is applicable for Device authentication only. This setting allows a user to log in with a specific role, as outlined here. For the Supervisor role, enable the "Supervisor Role" setting. Log out by right-clicking the device in EnerVista and selecting the **Disconnect** option.

Whenever a new role is logged in, the user is prompted to enter a password. Passwords must obey the requirements specified earlier in the chapter in the Password Requirements section.The UR device supports five roles. Roles have their corresponding passwords, except the Observer role, which does not require a password. There are no time-outs for the Administrator, Engineer, Operator, and Supervisor when logged in using the front panel; log out manually or use the **Command > Security** commands in the software.

The roles are defined as follows:

- Administrator — Complete read/write access to all settings and commands. This role does not allow concurrent access. This role has an operand to indicate when it is logged on.
- Engineer — Complete read/write access to all settings and commands except configuring Security settings and firmware upgrades. This role does not allow concurrent access.
- Operator — The Operator has read/write access to all settings under the Commands menu/section. This role does not exist offline.
- Supervisor — This is only an approving role. This role's authentication commits setting changes submitted by Administrator or Engineer. The Supervisor role authenticates to unlock the UR relay for setting changes and not approve changes after the fact. Only a Supervisor can set the Settings Lock and Firmware Lock in the Security settings. This role also has the ability to forcefully log off any other role and clear the security event log. This role can also be disabled, but only through a Supervisor authentication. When this role is disabled its permissions are assigned to the Administrator role.
- Observer — This role has read-only access to all L90 settings. This role allows concurrent access but it has no download access to any files on the device. Observer is the default role if no authentication has been done to the device. This role displays as "None" on the front panel. When local authentication is used, no password is required for this role. When RADIUS server authentication is used, a password is required.

NOTE

The Factory service role is not available. It is for factory use only.

The Local Access Denied message on the front panel can mean that you need to log in to the UR in order to complete the action.

Change device password

SETTINGS ⇨ PRODUCT SETUP ⇨ SECURITY ⇨⇩ CHANGE DEVICE PASSWORD

■ **CHANGE DEVICE** ■ **PASSWORD**	⇔	**NEW PASSWORD:**	Range: 20 alphanumeric characters
	⇧	**CONFIRM PASSWORD:**	Range: 20 alphanumeric characters

The menu is shown on the front panel upon successful login of the Administrator role.

Passwords are stored in text format. No encryption is applied.

NOTE

In Device authentication mode, the Observer role does not have a password associated with it. In Server authentication mode the Observer role requires a password.

If you are locked out of the software, reset the device to factory defaults as outlined later for **COMMANDS ⇨⇩ RELAY MAINTENANCE ⇨ SERVICE COMMAND**. When using CyberSentry, the default password is "ChangeMe1#".

Once the passwords are set, the Administrator with Supervisor approval can change the role-associated password.

In CyberSentry, password encryption is not supported.

Session settings

SETTINGS ⇨ PRODUCT SETUP ⇨ SECURITY ⇨⇩ SESSION SETTINGS

■ SESSION ■ SETTINGS	⇔	SESSION LOCKOUT: 3	Range: 0 to 99
	⇧	SESSION LOCKOUT PERIOD: 3 min	Range: 0 to 9999 minutes

SESSION LOCKOUT — This setting specifies the number of failed authentications before the device blocks subsequent authentication attempts for the lockout period. A value of zero means lockout is disabled.

SESSION LOCKOUT PERIOD — This setting specifies the period of time in minutes of a lockout period. A value of 0 means that there is no lockout period.

Restore defaults

SETTINGS ⇨ PRODUCT SETUP ⇨ SECURITY ⇨⇩ RESTORE DEFAULTS

■ RESTORE DEFAULTS ■	⇔	LOAD FACTORY DEFAULTS: No	Range: Yes, No

LOAD FACTORY DEFAULTS — This setting is used to reset all the settings, communication, and security passwords. An Administrator role is used to change this setting and a Supervisor role (if not disabled) approves it.

Supervisory

SETTINGS ⇨ PRODUCT SETUP ⇨ SECURITY ⇨⇩ SUPERVISORY

■ SUPERVISORY ■	⇔	DEVICE AUTHENTICATION: Yes	Range: Yes, No
	⇩	BYPASS ACCESS: Disabled	Range: Local, Remote, Local and Remote, Disabled, Pushbuttons
	⇩	LOCK RELAY: Disabled	Range: Enabled, Disabled
	⇩	FACTORY SERVICE MODE: Disabled	Range: Enabled, Disabled
	⇩	■ SELF TESTS ■	See below
	⇩	SUPERVISOR ROLE: Disabled	Range: Enabled, Disabled
	⇧	SERIAL INACTIVITY TIMEOUT: 1 min	Range: 1 to 9999 minutes

The Supervisory menu settings are available for Supervisor role only, or if the Supervisor role is disabled then for the Administrator role only.

DEVICE AUTHENTICATION — This setting is enabled by default, meaning "Yes" is selected. When enabled, Device authentication with roles is enabled. When this setting is disabled, the UR only authenticates to the AAA server (RADIUS). However, the Administrator and Supervisor (when enabled) remain active even after device authentication is disabled and their only permission is to re-enable Device authentication. To re-enable Device authentication, the Supervisor unlocks the device for settings changes, then the Administrator re-enables device authentication.

BYPASS ACCESS — The bypass security feature provides an easier access, with no authentication and encryption for those special situations when this is considered safe. Only the Supervisor, or the Administrator when the Supervisor role is disabled, can enable this feature.

Mode	Front panel or serial (RS232, RS485)	Ethernet
Normal mode	Authentication — Role Based Access Control (RBAC) and passwords in clear	Authentication — RBAC and passwords encrypted SSH tunneling
Bypass access mode	No passwords for allowed RBAC levels	No passwords for allowed RBAC levels No SSH tunneling

The bypass options are as follows:

- Local — Bypasses authentication for push buttons, keypad, and RS232
- Remote — Bypasses authentication for RS485 and Ethernet
- Local and Remote — Bypasses authentication for push buttons, keypad, RS232, RS485, and Ethernet
- Pushbuttons — Bypasses authentication for front panel push buttons, including in the software. On the graphical front panel, the authentication for side pushbuttons to control breakers and disconnects also is bypassed.

LOCK RELAY — This setting uses a Boolean value (Enabled/Disabled) to indicate if the device accepts settings changes and whether the device can receive a firmware upgrade. This setting can be changed by the Supervisor role, if it is enabled, or by the Administrator if the Supervisor role is disabled. The Supervisor role disables this setting for the relay to start accepting settings changes, command changes, or firmware upgrade. After all the setting changes are applied or commands executed, the Supervisor enables to lock settings changes.

Example: If this setting is enabled and an attempt is made to change settings or upgrade the firmware, the UR device denies the settings changes or denies upgrading the firmware. If this setting is disabled, the UR device accepts settings changes and firmware upgrade.

This role is disabled by default.

FACTORY SERVICE MODE — When Enabled, the device can go into factory service mode. For this setting to become enabled a Supervisor authentication is necessary. The default value is Disabled.

SUPERVISOR ROLE — When Enabled, the Supervisor role is active. To Disable this setting a Supervisor authentication is necessary. If disabled, the Supervisor role is not allowed to log in. In this case, the Administrator can change the settings under the Supervisory menu.

If enabled, Supervisor authentication is required to change the settings in the Supervisory menu. If the Supervisor disables their role after authentication, the Supervisor session remains valid until they switch to another role using MMI or until they end the current Supervisor session if using communications.

This role is disabled by default.

SERIAL INACTIVITY TIMEOUT — The role logged via a serial port is auto logged off after the Serial Inactivity timer times out. A separate timer is maintained for RS232 and RS485 connections. Set this value to a high number, such as eight minutes, when using the rear RS485 terminals for settings write.

GE recommends setting this value to at least 3 minutes for the following scenario: while connected to a CyberSentry device, with serial or USB cable connected to the front panel, and performing "Add Device to Offline Window" or an online/offline comparison. With less than the recommended 3 minutes, the serial activity timeout interrupts the connection and the security role login window appears. Upon login, the process resumes.

Self-tests

SETTINGS ⇨ PRODUCT SETUP ⇨ SECURITY ⇨⇩ SUPERVISORY ⇨ SELF TESTS

■ SELF TESTS ■	⇔	■ FAILED ■ AUTHENTICATE	See below

⇩	**FIRMWARE LOCK: Enabled**	Range: Enabled, Disabled
⇧	**SETTINGS LOCK: Enabled**	Range: Enabled, Disabled

FAILED AUTHENTICATE — If this setting is Enabled then the number of failed authentications is compared with the Session Lockout threshold. When the Session Lockout threshold is exceeded, this minor alarm indication comes up.

FIRMWARE LOCK — If this setting is Enabled, then any firmware upgrade operation attempt when the Lock Relay setting is enabled brings up this self test alarm.

SETTINGS LOCK — If this setting is Enabled then an unauthorized write attempt to a setting for a given role activates this self test.

SETTINGS ⇨ PRODUCT SETUP ⇨ SECURITY ⇨⇩ SUPERVISORY ⇨ SELF TESTS ⇨ FAILED AUTHENTICATE

■ **FAILED** ■ **AUTHENTICATE**	⇔	**FAILED AUTHENTICATE: Enabled**	Range: Enabled, Disabled

CyberSentry setup

When first using CyberSentry security, use the following procedure for setup.

1. Log in to the relay as Administrator by using the **VALUE** keys on the front panel to enter the default password "ChangeMe1#". Note that the Lock Relay setting needs to be disabled in the **Security > Supervisory** menu. When this setting is disabled, configuration and firmware upgrade are possible. By default, this setting is disabled.
2. Enable the Supervisor role if you have a need for it.
3. Make any required changes in configuration, such as setting a valid IP address for communication over Ethernet.
4. Log out of the Administrator account by choosing None.
5. Next, Device or Server authentication can be chosen on the login screen, but the choice is available only in EnerVista. Use Device authentication to log in using the five pre-configured roles (Administrator, Supervisor, Engineer, Operator, Observer). When using a serial connection, only Device authentication is supported. When Server authentication is required, characteristics for communication with a RADIUS server must be configured. This is possible only in the EnerVista software. The RADIUS server itself also must be configured. The appendix called RADIUS Server at the end of this instruction manual gives an example of how to set up a simple RADIUS server. Once both the RADIUS server and the parameters for connecting the UR to the server have been configured, you can choose Server authentication on the login screen of EnerVista.

NOTICE

The use of CyberSentry for devices communicating through an Ethernet-to-RS485 gateway is not supported. Because these gateways do not support the secure protocols necessary to communicate with such devices, the connection cannot be established. Use the device as a non-CyberSentry device.

Users logged in through the front panel are not timed out and cannot be forcefully logged out by a supervisor. Roles logged in through the front panel that do no allow multiple instances (Administrator, Supervisor, Engineer, Operator) must switch to None (equivalent to a logout) when they are done in order to log out.

For all user roles except Observer, only one instance can be logged in at a time, for both login by front panel and software.

To configure Server authentication:

1. In the EnerVista software, choose Device authentication and log in as Administrator.
2. Configure the following RADIUS server parameters: IP address, authentication port, shared secret, and vendor ID.
3. On the RADIUS server, configure the user accounts. Do not use the five pre-defined roles as user names (Administrator, Supervisor, Engineer, Operator, Observer) in the RADIUS server. If you do, the UR relay automatically provides the authentication from the device.
4. In the EnerVista software, choose Server authentication and log in using the user name and password configured on the RADIUS server for Server authentication login.

5. After making any required changes, log out.

NOTICE When changing settings offline, ensure that only settings permitted by the role that performs the settings download are changed because only those changes are applied.

Pushbuttons (both user-control buttons and user-programmable buttons) located on the front panel can be pressed by an Administrator or Engineer role. This also applies to the **RESET** button, which resets targets, where targets are errors displayed on the front panel or the Targets panel of the EnerVista software. The **RESET** button has special behavior in that it allows these two roles to press it even when they are logged in through the RS232 port and not through the front panel.

To reset the security event log and self-test operands:

1. Log in as Supervisor (if the role is enabled) or Administrator (if the Supervisor role is disabled) and execute a clear security command under **Commands > Security > Clear Security**.

Security events

The security events produced when the CyberSentry option is purchased are sent as sytem log (syslog) messages to a syslog server, if one is configured. The format is as follows.

	Security log	Event Number	Date & Timestamp	Username	IP address	Role	Activity Value

Event Number — Event identification number (index)

Date & Timestamp — UTC date and time

Username — 255 chars maximum, but in the security log it is truncated to 20 characters

IP address — Device IP address

Role — 16 bit unsigned, of type format F617

Enumeration	Role
0	None
1	Administrator
2	Supervisor
3	Engineer
4	Operator
5	Factory

Activity Value — 16 bit unsigned

Enumeration	Description
1	Authentication Failed
2	User Lockout
3	FW Upgrade
4	FW Lock
5	Settings Lock
6	Settings Change. Because this can fill the entire event log, it is supported by the already existing Settings_Change.log file. This event is not required.
7	Clear Oscillography command
8	Clear Data Logger command (not applicable to all UR products)
9	Clear Demand Records command (not applicable to all UR products)
10	Clear Energy command (not applicable to all UR products)
11	Clear Unauthorized Access command
12	Clear Teleprotection Counters command (not applicable to all UR products)
13	Clear All Relay Records command
14	Role Log in

Enumeration	Description
15	Role Log off

If "System Integrity Recovery" events are logged during a restart of the unit due to an incorrect shutdown sequence, upgrade the firmware to version 7.31 or later to correct this issue.

In addition to supporting syslog, a L90 with CyberSentry also saves the security events in two local security files, these being SECURITY_EVENTS.CSV and SETTING_CHANGES.LOG. Details on these files and how to retrieve them are available in the EnerVista software under **Maintenance > Retrieve File**. Depending on the level of criticality/severity, a syslog server or a reporting tool gathering information from a syslog server can produce reports, charts, and so on. All severity levels are per RFC 5424.

Table 5-6: CyberSentry system events recorded

Event	Severity	Description
FAILED_AUTH, ORIGIN, TIMESTAMP	Warning (4)	A failed authentication with origin information (username and IP:MAC address), a time stamp in UTC time when it occurred
AUTH_LOCKOUT, ORIGIN, TIMESTAMP	Error (3)	An authentication lockout has occurred because of too many failed authentication attempts
FIRMWARE_UPGD, ORIGIN, TIMESTAMP	Warning (4)	Indicates that a change of firmware has occurred
FIRMWARE_LOCK, ORIGIN, TIMESTAMP	Critical (1)	An attempt was made to change firmware while the firmware lock was enabled
SETTING_CHG, ORIGIN, TIMESTAMP	Notice (5)	Indicates setting change(s)
SETTING_LOCK, ORIGIN, TIMESTAMP	Critical (1)	An attempt was made to change settings while the settings lock was enabled
LOGIN, ORIGIN, TIMESTAMP	Warning (4)	Indicates when a certain role logged in
LOGOUT, ORIGIN, TIMESTAMP	Notice (5)	Indicates when a certain role logged out or timed out
CLEAR_OSCILLOGRAPHY	Notice (5)	Clear oscillography command was issued
CLEAR_DATA_LOGGER	Notice (5)	Clear data logger command was issued
CLEAR_DEMAND_RECS	Notice (5)	Clear demand records command was issued
CLEAR_ENERGY	Notice (5)	Clear energy command was issued
RESET_UNAUTH_ACCESS	Warning (4)	Reset Unauthorized access command was issued
CLEAR_TELEPROTECTION_CNT	Notice (5)	Clear teleprotection counters command was issued
CLEAR_ALL_RECS	Warning (4)	Clear all records command was issued

5.3.2 Display properties

SETTINGS ⇨ PRODUCT SETUP ⇨⇩ DISPLAY PROPERTIES

■ DISPLAY ■ PROPERTIES	⇔	**LANGUAGE:** **English**	Range: English; English, French; English, Russian; English, Chinese; English, German (examples; depends on order code) Visible when language other than English purchased
	⇩	**FLASH MESSAGE** **TIME: 1.0 s**	Range: 0.5 to 10.0 s in steps of 0.1
	⇩	**DEFAULT MESSAGE** **TIMEOUT: 300 s**	Range: 10 to 900 s in steps of 1
	⇩	**DEFAULT MESSAGE** **INTENSITY: 25 %**	Range: 25%, 50%, 75%, 100% Visible when a VFD is installed
	⇩	**SCREEN SAVER** **FEATURE: Disabled**	Range: Disabled, Enabled Visible when an LCD is installed
	⇩	**SCREEN SAVER WAIT** **TIME: 30 min**	Range: 1 to 65535 min. in steps of 1 Visible when an LCD is installed
	⇩	**CURRENT CUT-OFF** **LEVEL: 0.020 pu**	Range: 0.002 to 0.020 pu in steps of 0.001

⇧ **VOLTAGE CUT-OFF LEVEL: 1.0 V** Range: 0.1 to 1.0 V secondary in steps of 0.1

Some relay messaging characteristics can be modified to suit different situations using the display properties settings.

LANGUAGE — This setting selects the language used to display settings, actual values, and targets. This setting displays when a language other than English was purchased, and the range depends on the order code of the relay.

For Japanese, the settings display in Japanese on the graphical front panel, while the keys printed on the panel are in English.

For Japanese and Chinese, up to 10 characters can be input in a field on the graphical front panel, not 20.

With the graphical front panel, the language can be changed regardless of the language purchased. That is, all languages can be used. If you select a language with which you are unfamiliar and want to switch back to English for example, the menu order remains the same. That is, Settings is always second, Product Setup is always first, Display Properties is always second, and Language is always first.

If the language is changed after entering user-configured names, such as relay names, the strings are not translated. For example, a relay name is entered in English, the language is changed to Japanese, and the relay name remains in English. Set the language before changing settings.

NOTE

Restart the relay after changing the **LANGUAGE** setting.

The language can be selected also for the front panel in EnerVista under **Maintenance > Change Front Panel**.

The language of the EnerVista software can be changed under **View > Language**. Languages supported by the operating system display; that is for Polish or Japanese to display, the software needs to be installed on a Polish or Japanese operating system.

5

FLASH MESSAGE TIME — Flash messages are status, warning, error, and information messages displayed in response to certain key presses during settings programming. These messages override any normal messages. Use this setting to change the duration of flash messages on the display.

DEFAULT MESSAGE TIMEOUT — If the keypad is inactive for a period of time, the relay automatically reverts to a default message. The inactivity time is modified using this setting to ensure that messages remain on the screen long enough during programming or reading of actual values. This setting is not supported on the graphical front panel.

DEFAULT MESSAGE INTENSITY — To extend phosphor life in the vacuum fluorescent display, the brightness can be attenuated during default message display. During keypad interrogation, the display always operates at full brightness. This setting is not supported on the graphical front panel.

SCREEN SAVER FEATURE and **SCREEN SAVER WAIT TIME** — These settings are only visible if the L90 has a liquid crystal display (LCD) and control its backlighting. When the **SCREEN SAVER FEATURE** is "Enabled," the LCD backlighting turns off after the **DEFAULT MESSAGE TIMEOUT** followed by the **SCREEN SAVER WAIT TIME**, provided that no keys have been pressed and no target messages are active. When a keypress occurs or a target becomes active, the LCD backlighting turns on. These settings are not supported on the graphical front panel.

CURRENT CUT-OFF LEVEL — This setting modifies the current cut-off threshold. Very low currents (1 to 2% of the rated value) are very susceptible to noise. Some customers prefer very low currents to display as zero, while others prefer the current to display even when the value reflects noise rather than the actual signal. The L90 applies a cut-off value to the magnitudes and angles of the measured currents. If the magnitude is below the cut-off level, it is substituted with zero. This applies to phase and ground current phasors as well as true RMS values and symmetrical components. The cut-off operation applies to quantities used for metering, protection, and control, as well as those used by communications protocols. Note that the cut-off level for the sensitive ground input is 10 times lower that the **CURRENT CUT-OFF LEVEL** setting value. Raw current samples available via oscillography are not subject to cut-off.

This setting does not affect the 87L metering cutoff, which is constantly at 0.02 pu.

VOLTAGE CUT-OFF LEVEL — This setting modifies the voltage cut-off threshold. Very low secondary voltage measurements (at the fractional volt level) can be affected by noise. Some customers prefer these low voltages to be displayed as zero, while others prefer the voltage to be displayed even when the value reflects noise rather than the actual signal. The L90 applies a cut-off value to the magnitudes and angles of the measured voltages. If the magnitude is below the cut-off level,

it is substituted with zero. This operation applies to phase and auxiliary voltages, and symmetrical components. The cut-off operation applies to quantities used for metering, protection, and control, as well as those used by communications protocols. Raw samples of the voltages available via oscillography are not subject to cut-off.

The **CURRENT CUT-OFF LEVEL** and the **VOLTAGE CUT-OFF LEVEL** are used to determine the metered power cut-off levels. The power cut-off level is calculated using the following equations. For Delta connections:

$$\text{3-phase power cut-off} = \frac{\sqrt{3} \times \textbf{CURRENT CUT-OFF LEVEL} \times \textbf{VOLTAGE CUT-OFF LEVEL} \times \text{VT primary} \times \text{CT primary}}{\text{VT secondary}} \quad \textbf{Eq. 5-3}$$

For Wye connections:

$$\text{3-phase power cut-off} = \frac{3 \times \textbf{CURRENT CUT-OFF LEVEL} \times \textbf{VOLTAGE CUT-OFF LEVEL} \times \text{VT primary} \times \text{CT primary}}{\text{VT secondary}} \quad \textbf{Eq. 5-4}$$

$$\text{per-phase power cut-off} = \frac{\textbf{CURRENT CUT-OFF LEVEL} \times \textbf{VOLTAGE CUT-OFF LEVEL} \times \text{VT primary} \times \text{CT primary}}{\text{VT secondary}} \quad \textbf{Eq. 5-5}$$

where VT primary = VT secondary × VT ratio and CT primary = CT secondary × CT ratio.

For example, given the following settings:

CURRENT CUT-OFF LEVEL: "0.02 pu"
VOLTAGE CUT-OFF LEVEL: "1.0 V"
PHASE CT PRIMARY: "100 A"
PHASE VT SECONDARY: "66.4 V"
PHASE VT RATIO: "208.00 : 1"
PHASE VT CONNECTION: "Delta"

We have:

CT primary = "100 A", and
VT primary = **PHASE VT SECONDARY** x **PHASE VT RATIO** = 66.4 V x 208 = 13811.2 V

The power cut-off is therefore:

power cut-off= (**CURRENT CUT-OFF LEVEL** × **VOLTAGE CUT-OFF LEVEL** × CT primary × VT primary)/VT secondary
= ($\sqrt{3}$ × 0.02 pu × 1.0 V × 100 A × 13811.2 V) / 66.4 V
= 720.5 watts

Any calculated power value below this cut-off does not display. As well, the three-phase energy data do not accumulate if the total power from all three phases does not exceed the power cut-off.

NOTE

Lower the **VOLTAGE CUT-OFF LEVEL** and **CURRENT CUT-OFF LEVEL** with care as the relay accepts lower signals as valid measurements. Unless dictated otherwise by a specific application, the default settings of "0.02 pu" for **CURRENT CUT-OFF LEVEL** and "1.0 V" for **VOLTAGE CUT-OFF LEVEL** are recommended.

5.3.3 Graphical front panel

SOFTWARE OPTION

The graphical front panel is a hardware option. See the Order Codes section in chapter 2 for details.

Use the EnerVista software to configure the graphical front panel. The settings are not accessible from the graphical front panel.

The following screens are available:

- Home page
- Rolling mode
- Metering editor
- Single-line diagram editor

- Annunciator editor
- Configurable navigation

The settings menu itself and the event record pages are not configurable.

Multiple screens can be opened in the EnerVista software, but the first remains active and the others can be read-only. For example, the Annunciator Editor and Single Line Diagram Editor can be open and active, then subsequently opened Rolling Mode and Home Page screens are read-only. Close the windows, then re-open the one required.

5.3.3.1 Home page

This window sets the home page displayed on the graphical front panel and the date and time formats for all pages. Home page options include display of product information, alarms, actual values, and event records.

The path is **Settings > Product Setup > Graphical Panel > Home Page**. The menu does not display when there is no graphical front panel.

Figure 5-5: Home page with product information

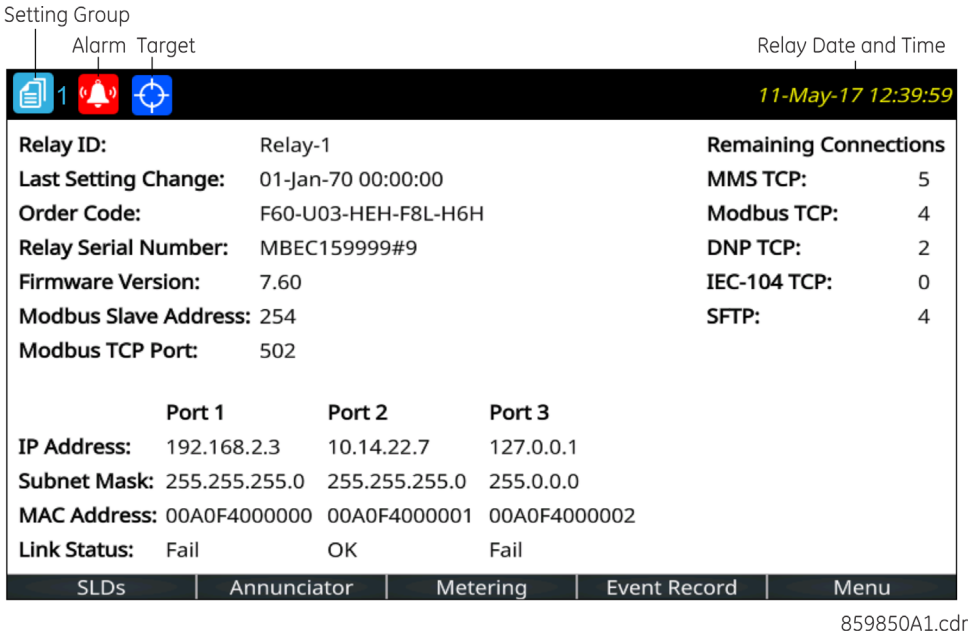

Figure 5-6: Home page settings

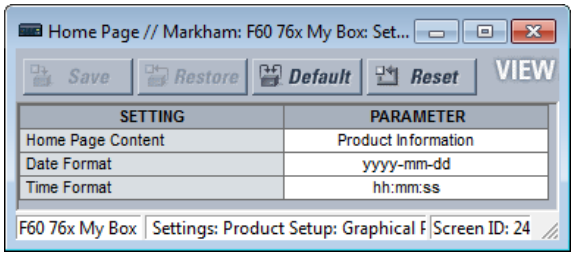

Home Page Content

Range: Product Information, SLD 1...5, Annunciator, Annunciator 1...8, Phasors 1...6, Tabular 1...5, Event Records, Targets
Default: Product Information

This setting specifies the page to display between the home page header and footer. Pressing the **Home** button returns the display to this page. The home page displays for the rolling mode delay specified, then changes to the rolling mode pages.

The "Annunciator" option without a page number specifies the first annunciator page in the following sequence:

- The first annunciator page that contains an annunciator window that is in alarm (fast flash)
- The first annunciator page that contains an annunciator window that is in ringback. Ringback is a "return alert." Visual and audible signals are given when conditions return to normal, then the sequence returns to normal by pushing the **RESET** button.
- The first annunciator page that contains an annunciator window that is in abnormal state
- Annunciator page 1

Whenever an annunciator window changes state this list is re-evaluated, which can result in the home page displaying a different annunciator page.

The Tabular option displays a configured actual values/metering page.

The Targets option displays error messages, such as wrong transceiver, similar to event record entries.

Date Format

Range: yyyy-mm-dd, dd-mmm-yy, yyyy/mm/dd, m/d/yyyy, m/d/yy, mm/dd/yy, mm/dd/yyyy, yy/mm/dd
Default: yyyy-mm-dd

This setting specifies the format for dates on the graphical front panel. It applies to the page header, the events records, the annunciator, and everywhere else a date displays on the panel. If the relay is synchronized to an external time source via PTP, IRIG-B, SNTP, and so on, the date/time is shown in white, and otherwise in yellow.

yyyy — four-digit year, for example 2017

yy — two-digit year, for example 17 for 2017

mmm — abbreviation of month name, for example Jan for January

mm — two-digit month, for example 01 for January

m — one or two-digit month, for example 1 for January and 10 for October

dd — two-digit day, for example 08

d — one or two-digit day, for example 8 and 28

To set the date and time, access **Synchronize Devices** in the software, synchronize to a time source using **Settings > Product Setup > Real Time Clock**, or synchronize to the computer using **Commands > Set Date and Time**.

Time Format

Range: hh:mm:ss, h:mm:ss tt
Default: hh:mm:ss

This setting specifies the format for time on the graphical front panel. It applies to the page header and everywhere else a time displays on the panel. When the Date Format and the Time Format use the defaults, the date and time are separated by the character "T" per the ISO convention, such as "2017-09-24T10:58:31". Otherwise the date and time are separated by a space. If the relay is synchronized to an external time source via PTP, IRIG-B, SNTP, and so on, the date/time is shown in white, and otherwise in yellow.

hh — two-digit hour, for example 02 for two o'clock

h — one or two-digit hour, for example 2 for two o'clock

mm — two-digit minute, for example 51 minutes

ss — two-digit second (can have a decimal and further digits appended), for example 16 seconds

tt — AM or PM based on 12 hour clock

If microseconds have to be displayed, for example, in the event records, the 24-hour clock is adopted. The representation of an accumulated period (for example hh:mm) is not affected by the selected time format.

To set the date and time, access **Synchronize Devices** in the software or synchronize to a time source using **Settings > Product Setup > Real Time Clock**.

5.3.3.2 Rolling mode

After a user-defined period of inactivity, the graphical front panel changes, or rolls, to user-selected pages. Up to 10 pages can be specified. Similarly, the display backlight intensity is lowered to a specified level; lower intensity extends the life of the display.

Each rolling page displays for a few seconds; duration cannot be set.

The path is **Settings > Product Setup > Graphical Panel > Rolling Mode**.

Figure 5-7: Rolling mode settings

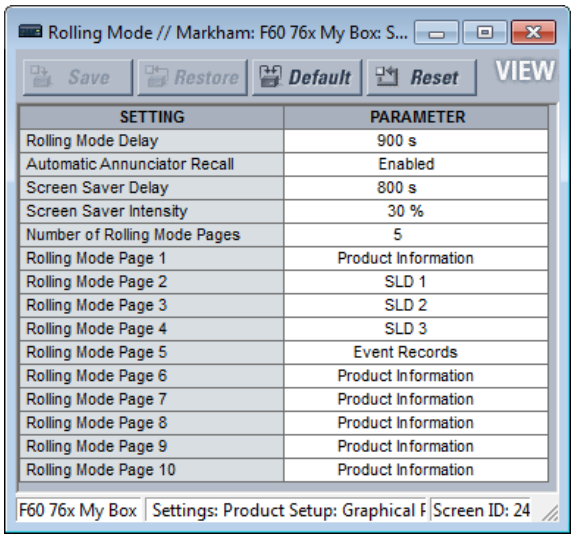

SETTING	PARAMETER
Rolling Mode Delay	900 s
Automatic Annunciator Recall	Enabled
Screen Saver Delay	800 s
Screen Saver Intensity	30 %
Number of Rolling Mode Pages	5
Rolling Mode Page 1	Product Information
Rolling Mode Page 2	SLD 1
Rolling Mode Page 3	SLD 2
Rolling Mode Page 4	SLD 3
Rolling Mode Page 5	Event Records
Rolling Mode Page 6	Product Information
Rolling Mode Page 7	Product Information
Rolling Mode Page 8	Product Information
Rolling Mode Page 9	Product Information
Rolling Mode Page 10	Product Information

5

Rolling Mode Delay

Range: 0 to 900 s in steps of 1
Default: 300 s

Set this delay to 0 to disable the rolling mode feature.

Otherwise, after no pushbutton has been pressed for the amount of time specified by this setting, the display automatically enters rolling mode. While in the rolling mode, the Rolling Mode Pages display. Rolling mode can be interrupted when a setting changes, such as changing the home page, then resumes rolling.

Automatic Annunciator Recall

Range: Enabled, Disabled
Default: Enabled

When Enabled, an annunciator window changes state, and the display is in rolling mode, this setting terminates rolling mode and displays the annunciator page containing the changed state.

The Configurable Navigation feature takes precedence over this setting when the Automatic Annunciator Recall and Configurable Navigation are activated by the same input.

Screen Saver Delay

Range: 0 to 900 s in steps of 1
Default: 300 s

The screen saver mode extends the life of the display. After the amount of time set here, the screen saver activates and the display intensity is reduced to the level set by the **Screen Saver Intensity** setting. When in rolling mode, rolling continues while the screen saver is active. The screen saver terminates when rolling mode terminates. To disable the screen saver, set the delay to 0.

Screen Saver Intensity

Range: 0, 10, 20, or 30 %
Default: 30 %

This setting sets the brightness of the display while the screen saver is active. For example, 0% means that the screen is dark and nothing displays. Pressing a pushbutton or changing a setting in the software, for example, re-activates the display.

Number of Rolling Mode Pages

Range: 1 to 10 in steps of 1

Default: 1

This setting specifies the number of rolling pages. During rolling mode, the graphical front panel displays pages from 1 to the selected number.

Rolling Mode Page 1 to 10

Range: Product Information, SLD 1...5, Annunciator, Annunciator 1...8, Phasors 1...6, Tabular 1...5, Event Records, Targets

Default: Product Information

These settings specify the pages to display on the graphical front panel while in rolling mode.

The "Annunciator" selection without a page number specifies the first annunciator page in the following sequence:

- The first annunciator page that contains an annunciator window that is in alarm (fast flash)
- The first annunciator page that contains an annunciator window that is in ringback. Ringback is a "return alert." Visual and audible signals are given when conditions return to normal, then the sequence returns to normal by pushing the **RESET** button.
- The first annunciator page that contains an annunciator window that is in abnormal state
- Annunciator page 1

Whenever an annunciator window changes state the list is re-evaluated, which can result in the display of a different annunciator page in the rolling sequence.

The Tabular option displays a configured actual values/metering page.

The Targets option displays error messages, such as wrong transceiver, similar to event record entries.

5.3.3.3 Metering editor

This feature creates tables of actual/metered values for the graphical front panel. It configures the content that displays in the Metering Tab pushbutton. An actual value, status, or text can be displayed. Five tabular metering pages can be configured. There also can be a phasor page for each configured AC source, and these pages are not configurable.

The path is **Settings > Product Setup > Graphical Panel > Metering Editor**.

Set the Current Page, Page Name, Layout, configure the top inputs, then the cells. The 16 inputs at the top of the page are used as inputs for the **Status Index** fields. Click the **Preview** button to view the page.

For a phasor diagram, configure the source under **Settings > System Setup > Signal Sources**. The diagram is then viewable by pushing the **Metering** Tab pushbutton on the graphical front panel. The Metering Editor is not used for these phasor diagrams.

The figures show setup and table preview.

Figure 5-8: Metering Editor window

Save | Restore | Default | Reset | VIEW ALL mode

STATUS	STATUS INPUTS			
1 to 4:	87L DIFF OP	87L DIFF OP G	87L DIFF BLOCKED	OFF
5 to 8:	PH DIST Z1 OP	GND DIST Z1 OP	PH DIST Z2 OP	GND DIST Z2 OP
9 to 12:	PH DIST Z3 OP	GND DIST Z3 OP	OFF	OFF
13 to 16:	OFF	OFF	OFF	OFF

CURRENT PAGE	Page 1	PAGE NAME	87L DIFF	LAYOUT	6x4		Preview	
PARAMETER	CONTENT	STATUS INDEX	TEXT	OFF TEXT	FONT	TEXT COLOR	BACK COLOR	ACTUAL
Cell(1, 1)	Text	Select One	DIFF OPERANDS		20			Configure
Cell(1, 2)	Status	1	87L DIFF OP	87LP NOT OP	16			Configure
Cell(1, 3)	Status	2	87L DIFF OP G	87LG NOT OP	16			Configure
Cell(1, 4)	Status	3	87L BLOCKED	87L NOT BLK	16			Configure
Cell(2, 1)	Text	Select One	DIFF CURRENT		20			Configure
Cell(2, 2)	Actual	Select One			16			Configure
Cell(2, 3)	Actual	Select One			16			Configure
Cell(2, 4)	Actual	Select One			16			Configure
Cell(3, 1)	Text	Select One	RESTRAINT CURR		20			Configure
Cell(3, 2)	Actual	Select One			16			Configure
Cell(3, 3)	Actual	Select One			16			Configure
Cell(3, 4)	Actual	Select One			16			Configure
Cell(4, 1)	Text	Select One	LOCAL CURRENT		20			Configure
Cell(4, 2)	Actual	Select One			16			Configure
Cell(4, 3)	Actual	Select One			16			Configure
Cell(4, 4)	Actual	Select One			16			Configure
Cell(5, 1)	Text	Select One	REM CURRENT		20			Configure
Cell(5, 2)	Actual	Select One			16			Configure
Cell(5, 3)	Actual	Select One			16			Configure
Cell(5, 4)	Actual	Select One			16			Configure
Cell(6, 1)	Text	Select One	GND DIFF		20			Configure
Cell(6, 2)	Actual	Select One			16			Configure
Cell(6, 3)	Text	Select One	GND RESTRAINT		20			Configure
Cell(6, 4)	Actual	Select One			16			Configure

Figure 5-9: Preview for graphical front panel

//Metering/87L DIFF

DIFF OPERANDS	87L DIFF OP	87L DIFF OP G	87L BLOCKED
DIFF CURRENT	000000.000 A	000000.000 A	000000.000 A
RESTRAINT CURR	000000.000 A	000000.000	000000.000 A
LOCAL CURRENT	000000.000 A	000000.000 A	000000.000 A
REM CURRENT	000000.000 A	000000.000 A	000000.000 A
GND DIFF	000000.000 A	GND RESTRAINT	000000.000 A

Page 1 : 87L DIFF Rows: 6 Columns: 4

To avoid conflict with XML programming, do not enter the following characters on the Annunciator and Metering editor panels: " (quotation mark), ' (apostrophe), < (less than), > (greater than), & (ampersand). When used, the text following the character does not display or the Annunciator and Metering panels do not display on the graphical front panel.

STATUS INPUTS 1 to 16

Range: OFF, ON, any FlexLogic operand
Default: OFF

This setting identifies the potential inputs for use in the STATUS INDEX fields, for display of the status of FlexLogic operands.

A maximum of eight Status Inputs can be used per metering page, and 16 in all metering pages.

Select the metering input from the drop-down list. The options reflect the FlexLogic operands applicable to the L90. They are inputs for all five metering pages, not just the current page.

CURRENT PAGE

Range: Page 1...Page 5
Default: Page 1

Select the metering page to configure from the drop-down list. There are five pages possible, viewable with the Tab pushbuttons on the graphical front panel.

PAGE NAME

Range: Page 1...Page 5
Default: Page 1

Up to 20 characters can be input here as the name of each metering page. The name displays for the Tab pushbutton on the graphical front panel.

LAYOUT

Range: 3x4, 4x6, 6x8, 6x4, 8x6, 12x8, 12x4, 16x6, 18x8
Default: 6x4

This setting determines how many rows and columns display on the graphical front panel with the metering information. The configurable rows in the settings window change dynamically based on this setting.

CONTENT

Range: Actual, Status, Text
Default: Text

Select the type of content to display.

- Actual — an actual value/data. The **Configure** button becomes active for the actual value to be selected.
- Status — one of the operands selected from the STATUS INPUTS fields. Select it in the **STATUS INDEX** field.
- Text — indicates that text is to display instead of a metered value

STATUS INDEX

Range: 1...16
Default:

This field becomes active when the **CONTENT** field is set to Status. It selects the input from the STATUS INPUTS to display the on/off status of the selected operand.

A maximum of eight Status Inputs can be used per metering page, and 16 in all metering pages.

TEXT

Range: up to 20 alphanumeric characters
Default:

Enter the text to display on the graphical front panel. This field is active when the **CONTENT** field is set to Text or Status. When Status is selected, the text displays when the status input is in the "on" state.

OFF TEXT

Range: up to 20 alphanumeric characters
Default:

Enter the text to display on the graphical front panel when the element being monitored is in an off/closed state. This field is active when the **CONTENT** field is set to Status. The text displays when the status input is in the "off" state.

FONT

Range: 16, 18, 20
Default: 16

Set the font size to display on the graphical front panel.

TEXT COLOR

Range: 24-bit color selector
Default: Black

Set the text color to display in the specified cell.

BACK COLOR

Range: 24-bit color selector
Default: Grey

Set the background color to display in the specified cell.

ACTUAL (Configure)

Range: Configure
Default: Configure

The **Configure** button becomes active when the **CONTENT** field is set to "Actual." The window specifies the metering data to display.

Figure 5-10: Metering value properties window

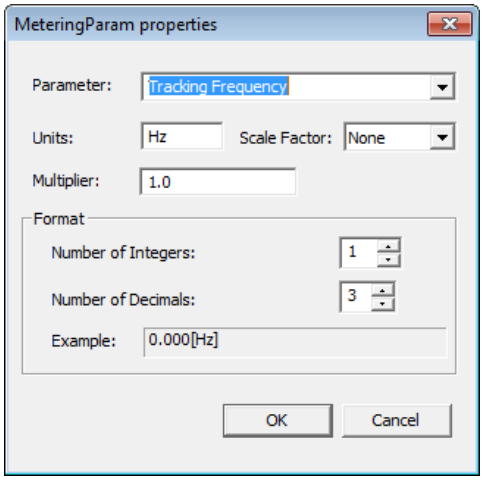

Parameter

Range: any FlexAnalog parameter
Default:

This setting selects a FlexAnalog parameter that specifies the metered value to display in the metering window. A FlexAnalog is an analog parameter.

Units

Range: up to eight alphanumeric characters
Default:

This setting specifies the units of measurement for the metered value and is populated based on the Parameter selected. The field can be left blank when units of measure do not apply.

Scale Factor

Range: G Giga, M Mega, k Kilo, None
Default: None

This setting allows the user to specify the scaling factor for the metering units value. Options depend on the Parameter.

Multiplier

Range: -1000000 to 1000000
Default: 1.0

This setting allows the user to specify a multiplier for the metering parameter value. The multiplier must be in compliance with the 32-bit floating-point format per IEEE 754, otherwise, the input value is represented as per the IEEE standard. For example, 1234.56789 is represented as 1234.567871094, and 9876.54321 as 9876.54296875.

Number of Integers

Range: 1 to 12 in steps of 1

Default: 1

This setting specifies the number of integers in the displayed metered value. It can be used to provide for leading character spacing of the display value.

For example, setting the number to 2 displays 00.000[V] and setting it to 3 displays 000.000[V].

Number of Decimals

Range: 0 to 10 in steps of 1

Default: 3

This setting specifies the number of decimal places in the displayed metered value. For example, setting the number to 1 displays 0.0 and setting it to 2 displays 0.00.

5.3.3.4 Single-line diagram editor

The path is **Settings > Product Setup > Graphical Panel > Single Line Diagram Editor**. Use is explained in the Interfaces chapter.

5.3.3.5 Annunciator editor

The annunciator editor is used to create annunciator content for the graphical front panel, including alarms and actual values. Use is explained in the Interfaces chapter.

The path is **Settings > Product Setup > Graphical Panel > Annunciator Editor**.

To add an alarm, access the Annunciator Editor, configure the Layout and Page Name, configure the alarm or actual value, set the text and color, then save. On the graphical front panel, view the content by pressing the **Annunciator** Tab pushbutton at the bottom of the **Home** page. (Alarms do not display automatically.) Acknowledge the alarm by navigating to it with the arrow pushbuttons, then pressing the **ENTER** or **RESET** pushbutton.

The figure shows alarms for basic functions. The last annunciator page is named Device Alarms. Alarms are set for the device being offline, Ethernet cable issues, unauthorized access, battery failure, and high ambient temperature. They can reset themselves when conditions return to normal, except for unauthorized access and temperature monitoring, which require the alarms to be acknowledged. The self-test error functions, here for Ethernet and battery failures, also have been enabled under **Settings > Product Setup > User-Programmable Self Tests** (not shown). When the alarms are triggered, they display with a red background. An alarm is acknowledged by using the arrow keys on the graphical front panel then pressing the **ENTER** button.

Figure 5-11: Annunciator editor with preview shown

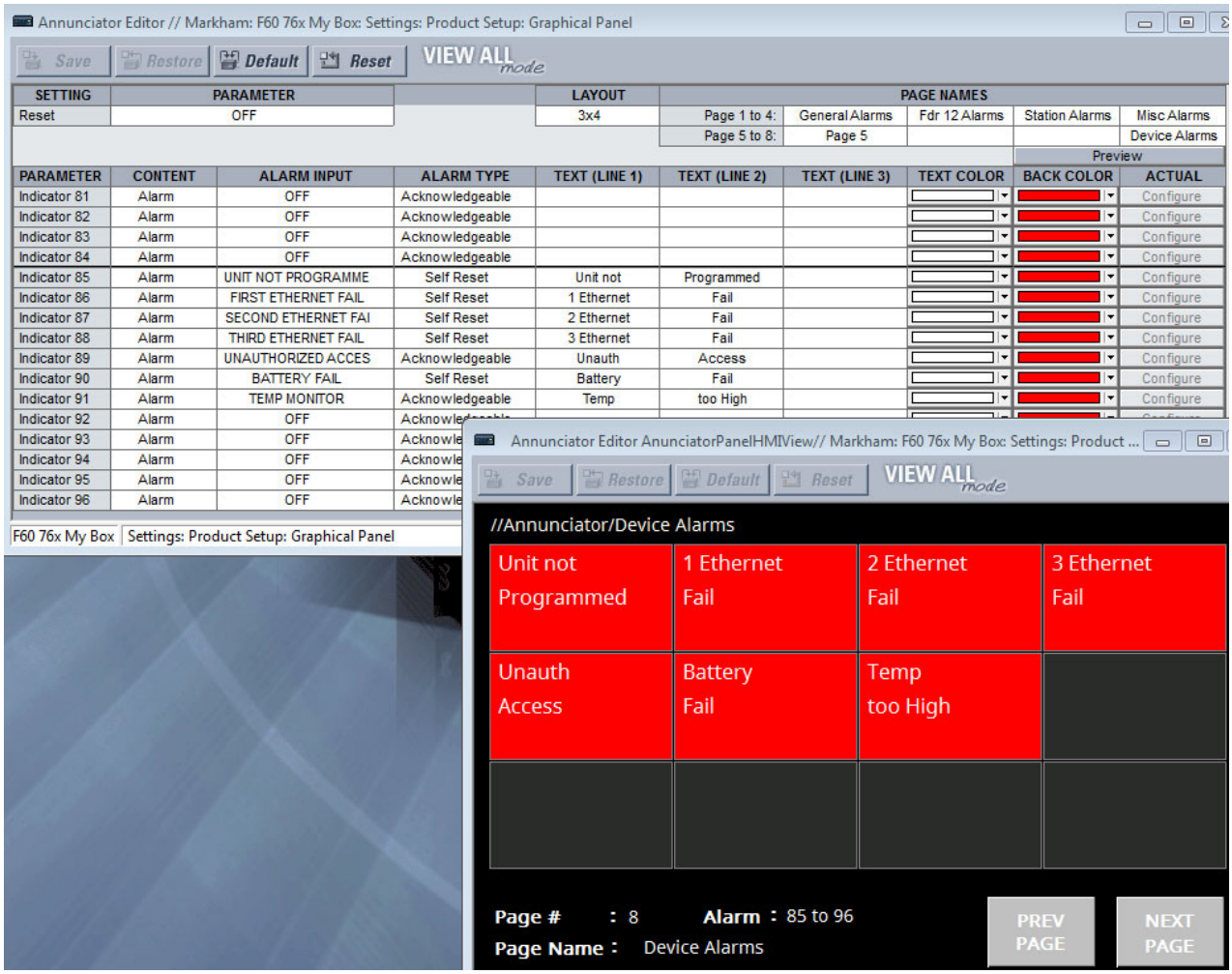

To avoid conflict with XML programming, do not enter the following characters on the Annunciator and Metering editor panels: " (quotation mark), ' (apostrophe), < (less than), > (greater than), & (ampersand). When used, the text following the character does not display or the Annunciator and Metering panels do not display on the graphical front panel.

Reset

Range: ON, OFF, any FlexLogic operand

Default: OFF

This setting selects a FlexLogic operand that when activated acknowledges/resets all annunciator windows in the graphical front panel. For example, to have the first user pushbutton resets all alarms, set this to PUSHBUTTON 1 ON and turn on the pushbutton under **Settings > Product Setup > User-Programmable Pushbuttons**. This setting is the same as the one defined in **Settings > Inputs/Outputs > Resetting > Reset Annunciator**. See the Resetting section later in this chapter.

LAYOUT

Range: 3x4, 4x6, 6x8

Default: 3x4

Selects the number of rows and columns to display on the annunciator pages. For example, 3x4 means 12 windows display per page over eight pages. Up to 96 entries are possible.

To view the layout, click the **Preview** button.

PAGE NAMES

Range: up to 20 alphanumeric characters

Default: Page 1...Page 8

Up to 20 characters can be input as the name of each annunciator page. The number of pages depends on the Layout. The name displays for the Tab pushbutton on the graphical front panel.

PARAMETER

Range: Indicator 1...Indicator 96

Default: Indicator 1...Indicator 96

Read-only field. Up to 96 windows are possible.

CONTENT

Range: Actual, Alarm, Mixed

Default: Alarm

Select if the cell is to be an alarm, an actual value, or a combination thereof, for example consists of a single metered value (set to “Actual”), contains a single alarm indication (set to “Alarm”), or contains both a metered value and an alarm indication (set to “Mixed”).

ALARM INPUT

Range: OFF, ON, any FlexLogic operand

Default: OFF

Select a trigger for the alarm, or the input signal connected to the alarm. For example, when set to "FIRST ETHERNET FAIL" and the Ethernet cable connected to port 1 is removed, the alarm is triggered. (Note that when the Ethernet cable is inserted into an SFP connector and the SFP connector is removed, the alarm is not triggered.) The field is read-only for an actual value.

The selectable options are the FlexLogic operands specific to the product.

ALARM TYPE

Range: Acknowledgeable, Self Reset, Latched

Default: Acknowledgeable

Set the alarm type. The field is read-only for an actual value.

Acknowledgeable — Follow the state transitions, as outlined in the Annunciator section of the Interfaces chapter. The alarm blinks until acknowledged, then remains on until the condition clears.

Self Reset — Track the state of the input operand. The alarm turns on when the trigger activates and off when the trigger clears.

Latched — Alarm is on until acknowledged/reset individually or until the **RESET** button is pressed.

To acknowledge/reset/unlatch an alarm, use the arrow buttons on the graphical front panel and press the **ENTER** button.

TEXT (LINE 1 to 3)

Range: up to 10 alphanumeric characters

Default:

The text that displays in the annunciator cell. Three lines can be displayed. Note that a specified metering value replaces the text for the selected line. This means that a line can display text or be set to show an actual metered value. If the text does not display it is because an actual metered value is over-riding it; change the line for the text or for the actual value.

TEXT COLOR

Range: 24-bit color selector

Default: White

The color to display for the three text or actual value lines specified.

BACK COLOR

Range: 24-bit color selector

Default: Red

The background color to display for any triggered cell, for example when an alarm is triggered.

ACTUAL (Configure)

Range: Configure
Default: Configure

The **Configure** button becomes active when the **CONTENT** field is set to "Actual" or "Mixed." The window specifies the metering data to display.

Parameter

Range: any FlexAnalog parameter
Default:

This setting selects a FlexAnalog parameter that specifies the metered value to display in the annunciator alarm.

Units

Range: up to eight alphanumeric characters
Default:

This setting specifies the units of measurement for the metered value and is populated based on the Parameter selected. The field can be left blank when units of measure do not apply.

Scale Factor

Range: G Giga, M Mega, k Kilo, None
Default: None

This setting allows the user to specify the scaling factor for the metering units value. Options depend on the Parameter.

Multiplier

Range: -1000000 to 1000000
Default: 1.0

This setting allows the user to specify a multiplier for the metering parameter value. The multiplier must be in compliance with the 32-bit floating-point format per IEEE 754, otherwise, the input value is represented as per the IEEE standard. For example, 1234.56789 is represented as 1234.567871094, and 9876.54321 as 9876.54296875.

Number of Integers

Range: 1 to 12 in steps of 1
Default: 1

This setting specifies the number of integers in the displayed analog value. It can be used to provide for leading character spacing of the display value.

For example, setting the number to 2 displays 00.000[V] and setting it to 3 displays 000.000[V].

Number of Decimals

Range: 0 to 10 in steps of 1
Default: 3

This setting specifies the number of decimal places in the displayed analog value. For example, setting the number to 1 displays 0.0 and setting it to 2 displays 0.00.

Display in Line

Range: 1, 2, 3
Default: 1

This setting specifies the line in the annunciator alarm window to display the metered value. The actual value replaces the text for the selected line. For example, 2 means the value displays in line 2 of the text; any text configured to display in that line does not display.

5.3.3.6 Configurable navigation

The path is **Settings > Product Setup > Graphical Panel > Configurable Navigation**.

This feature allows FlexLogic operands to trigger page display on the graphical front panel. It consists of 64 setting pairs, each with a condition and an activation page. The condition selects any FlexLogic operand. The activation page selects any page available for the graphical front panel. The page opens whenever the selected operand transitions from Off to On. The page remains open until rolling mode initiates, another trigger initiates from Configurable Navigation, or the **Home** button is pressed.

Avoid selecting condition operands that are likely to operate simultaneously but activate different pages, as only one page can be opened at a time. For example, do not select a single-line diagram page for breaker status open and select an annunciator page for a trip alarm.

In the example shown, failure of any of the three Ethernet ports triggers the Product Information page to display. With unauthorized access (such as wrong password), IRIG-B clock failure, or breaker trouble, the Event Records display. When a breaker opens, a single-line diagram displays. For the Ethernet and IRIG-B failure operation to work, these functions also have been enabled under **Settings > Product Setup > User-Programmable Self Tests**.

Figure 5-12: Configurable navigation editor

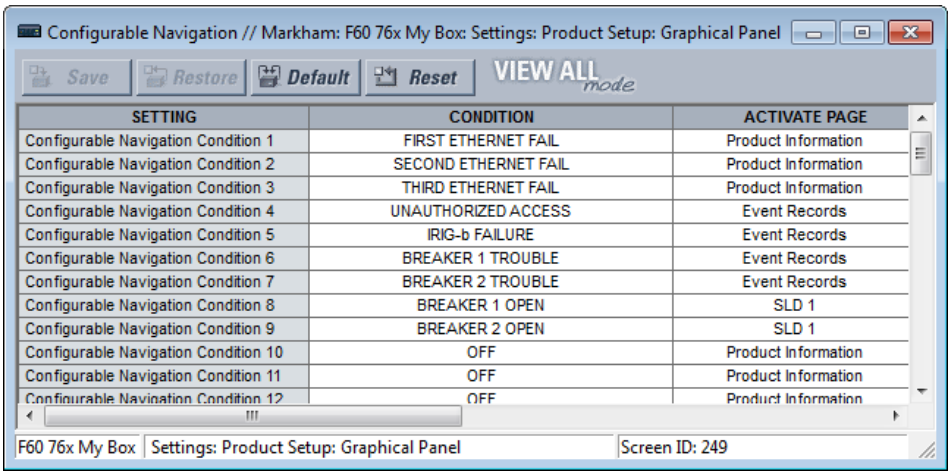

SETTING	CONDITION	ACTIVATE PAGE
Configurable Navigation Condition 1	FIRST ETHERNET FAIL	Product Information
Configurable Navigation Condition 2	SECOND ETHERNET FAIL	Product Information
Configurable Navigation Condition 3	THIRD ETHERNET FAIL	Product Information
Configurable Navigation Condition 4	UNAUTHORIZED ACCESS	Event Records
Configurable Navigation Condition 5	IRIG-b FAILURE	Event Records
Configurable Navigation Condition 6	BREAKER 1 TROUBLE	Event Records
Configurable Navigation Condition 7	BREAKER 2 TROUBLE	Event Records
Configurable Navigation Condition 8	BREAKER 1 OPEN	SLD 1
Configurable Navigation Condition 9	BREAKER 2 OPEN	SLD 1
Configurable Navigation Condition 10	OFF	Product Information
Configurable Navigation Condition 11	OFF	Product Information
Configurable Navigation Condition 12	OFF	Product Information

To use the feature, select a **CONDITION**, select an **ACTIVATE PAGE**, then save.

CONDITION

Range: OFF, ON, any FlexLogic operand

Default: OFF

Select the FlexLogic operand for the trigger. When it transitions from Off to On, it opens the page specified by the **ACTIVATE PAGE** setting. The FlexLogic operands selectable depend on product. Select it from the drop-down list. Or click or select the field and start typing to auto-fill. For example, typing F displays FIRST ETHERNET FAIL, while typing BR displays the first breaker option.

ACTIVATE PAGE

Range: Product Information, SLD 1...5, Annunciator, Annunciator 1...8, Actual Values Phasors 1...6, Tabular 1...5, Event Records, Targets

Default: Product Information

This setting specifies the page to display on the graphical front panel when the FlexLogic operand selected by its **CONDITON** setting transitions from Off to On.

The "Annunciator" option without a page number specifies the first annunciator page in the following sequence:

- The first annunciator page that contains an annunciator window that is in alarm (fast flash)
- The first annunciator page that contains an annunciator window that is in ringback. Ringback is a "return alert." Visual and audible signals are given when conditions return to normal, then the sequence returns to normal by pushing the **RESET** button.
- The first annunciator page that contains an annunciator window that is in abnormal state
- Annunciator page 1

The Tabular option displays a configured actual values/metering page.

The Targets option displays error messages, such as wrong transceiver, similar to event record entries.

5.3.4 Clear relay records

SETTINGS ⇨ PRODUCT SETUP ⇨⇩ CLEAR RELAY RECORDS

■ CLEAR RELAY ■ RECORDS	⇔	**CLEAR FAULT REPORTS:** **Off**	Range: FlexLogic operand
	⇩	**CLEAR EVENT RECORDS:** **Off**	Range: FlexLogic operand
	⇩	**CLEAR OSCILLOGRAPHY:** **Off**	Range: FlexLogic operand
	⇩	**CLEAR DATA LOGGER:** **Off**	Range: FlexLogic operand
	⇩	**CLEAR ARC AMPS 1:** **Off**	Range: FlexLogic operand
		⇩	
	⇩	**CLEAR ARC AMPS 4:** **Off**	Range: FlexLogic operand
	⇩	**CLEAR DEMAND:** **Off**	Range: FlexLogic operand
	⇩	**CLEAR CHNL STATUS:** **Off**	Range: FlexLogic operand
	⇩	**CLEAR ENERGY:** **Off**	Range: FlexLogic operand
	⇧	**RESET UNAUTH ACCESS:** **Off**	Range: FlexLogic operand

RESET UNAUTH ACCESS — Resets the access restriction counter.

Selected records can be cleared from user-programmable conditions with FlexLogic operands. Assigning user-programmable pushbuttons to clear specific records is a typical application for these commands. Since the L90 responds to rising edges of the configured FlexLogic operands, they must be asserted for at least 50 ms to take effect.

Clearing records with user-programmable operands is not protected by the command password. However, user-programmable pushbuttons are protected by the command password. Thus, if they are used to clear records, the user-programmable pushbuttons can provide extra security if required.

For example, to assign user-programmable pushbutton 1 to clear demand records, apply the following settings.

1. Assign the clear demand function to pushbutton 1 by making the following change in the **SETTINGS ⇨ PRODUCT SETUP ⇨⇩ CLEAR RELAY RECORDS** menu:

   CLEAR DEMAND: "PUSHBUTTON 1 ON"

2. Set the properties for user-programmable pushbutton 1 by making the following changes in the **SETTINGS ⇨ PRODUCT SETUP ⇨⇩ USER-PROGRAMMABLE PUSHBUTTONS ⇨ USER PUSHBUTTON 1** menu:

   PUSHBUTTON 1 FUNCTION: "Self-reset"
   PUSHBTN 1 DROP-OUT TIME: "0.20 s"

5.3.5 Communications

5.3.5.1 Menu

SETTINGS ⇨ PRODUCT SETUP ⇨⇩ COMMUNICATIONS

■ COMMUNICATIONS ■	⇔	■ SERIAL PORTS ■	See below
	⇩	■ NETWORK ■	See page 5-44
	⇩	■ IPv4 ROUTE TABLE ■	See page 5-49
	⇩	■ MODBUS PROTOCOL ■	See page 5-52
	⇩	■ PROTOCOL ■	See page 5-53
	⇩	■ DNP PROTOCOL ■	See page 5-54
	⇩	■ DNP / IEC104 ■ POINT LISTS	See page 5-57
	⇩	■ IEC 61850 PROTOCOL ■	Access in EnerVista See page 5-58
	⇩	■ WEB SERVER ■ HTTP PROTOCOL	See page 5-102
	⇩	■ TFTP PROTOCOL ■	See page 5-103
	⇩	■ IEC 60870-5-104 ■ PROTOCOL	See page 5-103
	⇩	■ IEC103 ■ PROTOCOL	See page 5-105
	⇧	■ USB 2.0 PORT ■	See page 5-109

5.3.5.2 Serial ports

SETTINGS ⇨ PRODUCT SETUP ⇨⇩ COMMUNICATIONS ⇨ SERIAL PORTS

■ SERIAL PORTS ■	⇔	RS232 BAUD RATE: 115200	Range: 19200, 115200
	⇩	RS485 COM2 BAUD RATE: 19200	Range: 300, 1200, 2400, 4800, 9600, 14400, 19200, 28800, 33600, 38400, 57600, 115200 bit/s
	⇩	RS485 COM2 PARITY: Even	Range: None, Odd, Even
	⇧	RS485 COM2 RESPONSE MIN TIME: 0 ms	Range: 0 to 1000 ms in steps of 10

The front RS232 port applies to enhanced and basic front panels.

RS232 BAUD RATE, **RS485 COM2 BAUD RATE**, and **PARITY** — The L90 is equipped with two independent serial communication ports. The front panel RS232 port (USB port with graphical front panel) is intended for local use. The rear COM2 port is RS485 and has settings for baud rate and parity. It is important that these parameters agree with the settings used on the computer or other equipment that is connected to these ports. Any of these ports can be connected to a computer running the EnerVista software, for example to download and upload setting files, view measured parameters, and

upgrade the relay firmware. A maximum of 32 relays can be daisy-chained and connected to a DCS, PLC, or computer using the RS485 ports. If IEC 60870-103 is chosen as the protocol, valid baud rates are 9600 and 19200 bit/s, and valid parity is Even.

RS485 COM2 RESPONSE MIN TIME — This setting specifies the minimum time before the rear RS485 port transmits after receiving data from a host. This feature allows operation with hosts that hold the RS485 transmitter active for some time after each transmission.

5.3.5.3 Ethernet network topology

The L90 has three Ethernet ports. Each Ethernet port must belong to a different network or subnetwork. Configure the IP address and subnet to ensure that each port meets this requirement. Two subnets are different when the bitwise AND operation performed between their respective IP address and mask produces a different result. Communication becomes unpredictable when more than one port is configured to the same subnet.

Example 1

IP1/Mask1: 10.1.1.2/255.255.255.0 (where LAN 1 is 10.1.1.x/255.255.255.0)

IP2/Mask2: 10.2.1.2/255.255.255.0 (where LAN2 is 10.2.1.x/255.255.255.0)

IP3/Mask3: 10.3.1.2/255.255.255.0 (where LAN3 is 10.3.1.x/255.255.255.0)

Example 2

IP1/Mask1: 10.1.1.2/255.0.0.0 (where LAN1 is 10.x.x.x/255.0.0.0)

IP2/Mask2: 11.1.1.2/255.0.0.0 (where LAN2 is 11.x.x.x/255.0.0.0)

IP3/Mask3: 12.1.1.2/255.0.0.0 (where LAN3 is 12.x.x.x/255.0.0.0)

Example 3 — Incorrect

IP1/Mask1: 10.1.1.2/255.0.0.0

IP2/Mask2: 10.2.1.2/255.0.0.0

IP3/Mask3: 10.3.1.2/255.0.0.0

This example is incorrect because the mask of 255.0.0.0 used for the three IP addresses makes them belong to the same network of 10.x.x.x.

Single LAN, no redundancy

The topology shown in the following figure allows communications to SCADA, local configuration/monitoring through EnerVista, and access to the public network shared on the same LAN. No redundancy is provided.

Figure 5-13: Network configuration for single LAN

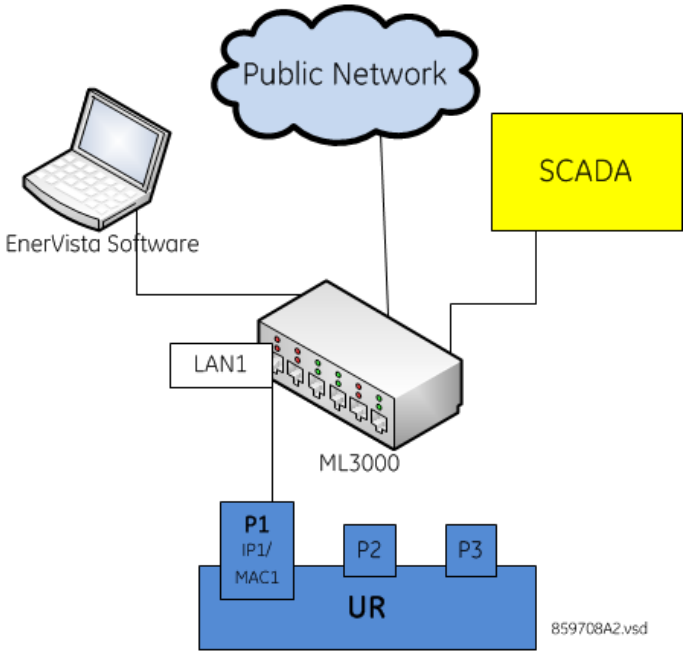

Multiple LANS, with redundancy

The following topology provides local configuration/monitoring through EnerVista software and access to the public network shared on LAN1, to which port 1 (P1) is connected. There is no redundancy provided on LAN1. Communications to SCADA is provided through LAN2. P2 and P3 are connected to LAN2, where P2 is the primary channel and P3 is the redundant channel. In this configuration, P3 uses the IP and MAC addresses of P2.

Figure 5-14: Multiple LANs, with redundancy

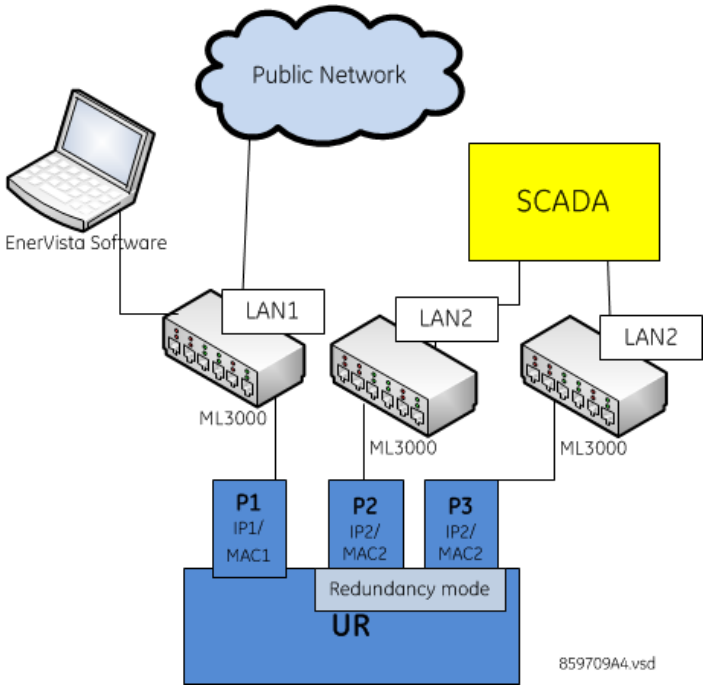

Multiple LANS, no redundancy

The following topology provides local configuration/monitoring through EnerVista software on LAN1, to which port 1 (P1) is connected, access to the public network on LAN2, to which port 2 (P2) is connected, and communications with SCADA on LAN3, to which port 3 (P3) is connected. There is no redundancy.

Figure 5-15: Multiple LANS, no redundancy

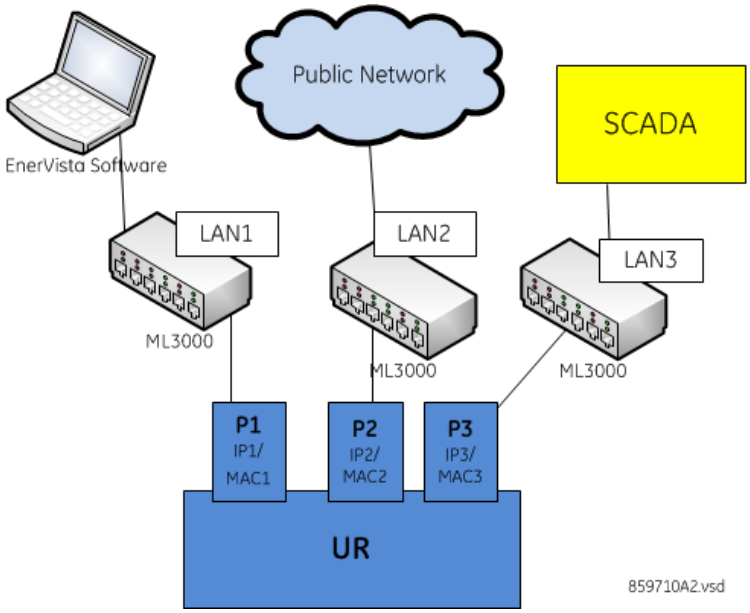

5

5.3.5.4 Network

As outlined in the previous section, when using more than one Ethernet port, configure each to belong to a different network or subnet using the IP addresses and mask. Configure the network IP and subnet settings before configuring the routing settings.

Follow the IP and subnet mask rules outlined in the Set IP Address in UR section of the Installation chapter.

To obtain a list of all port numbers used, for example for audit purposes, contact GE technical support with substantiating information, such as the serial number and order code of your device.

SETTINGS ⇨ PRODUCT SETUP ⇨⇩ COMMUNICATIONS ⇨⇩ NETWORK ⇨ NETWORK PORT 1(3)

■ **NETWORK PORT 1** ■	⇔	**PRT1 IP ADDRESS:** **127.0.0.1**	Range: standard IPV4 address format
	⇩	**PRT1 SUBNET IP MASK:** **255.0.0.0**	Range: standard IPV4 address format
	⇩	**PRT1 FUNCTION:** **Enabled**	Range: Enabled, Disabled

■ **NETWORK PORT 2** ■	⇔	**PRT2 IP ADDRESS:** **127.0.0.1**	Range: standard IPV4 address format
	⇩	**PRT2 SUBNET IP MASK:** **255.0.0.0**	Range: standard IPV4 address format
	⇩	**PRT2 REDUNDANCY:** **None**	Range: None, Failover, PRP Range if no PRP license: None, Failover
	⇩	**PRP MCST ADDR:** **01154E000100**	Range: 01-15-4E-00-01-00 to 01-15-4E-00-01-FF

	⇧	**PRT2 FUNCTION: Enabled**	Range: Enabled, Disabled
■ NETWORK PORT 3 ■	⇔	**PRT3 IP ADDRESS: 127.0.0.1**	Range: standard IPV4 address format
	⇧	**PRT3 SUBNET IP MASK: 255.0.0.0**	Range: standard IPV4 address format
	⇧	**PRT3 FUNCTION: Enabled**	Range: Enabled, Disabled

The IP addresses are used with the DNP, Modbus/TCP, IEC 61580, IEC 60870-5-104, TFTP, HTTP, and PRP protocols. PRP is explained in its own section later.

Use the front panel to change these settings. When online, the EnerVista software can be used to enable/disable each port only. In the Offline Window area, all settings can be changed except port 2 redundancy (depending on firmware version).

When using GOOSE, in failover or PRP mode, port 3 configuration in the CID file is ignored. The Port 3 ConnectedAP elements has no meaning, as ports 2 and 3 use the port 2 MAC address, IP address, and mask.

PRT1 (2 or 3) IP ADDRESS — This setting sets the port's IPv4 address in standard IPV4 format. This setting is valid on port 3 if port 2 **REDUNDANCY** is set to None.

PRT1 (2 or 3) SUBNET MASK — This setting sets the port's IPv4 subnet mask in standard IPV4 format. This setting is valid on port 3 if port 2 **REDUNDANCY** is set to None.

PRT1 (2 or 3) FUNCTION — This setting enable/disables network communication on the respective port. When the port function is Disabled, the network traffic on this port is disabled. The PRT2 redundancy setting has no effect on this functionality. The change takes effect upon relay restart.

PRT2 REDUNDANCY — Determines if ports 2 and 3 operate in redundant or independent mode. If the software options in the order code include PRP, the available options are None, Failover, and PRP. If the software options in the order code do not include PRP, the available options are None and Failover. In non-redundant mode (**REDUNDANCY** set to None), ports 2 and 3 operate independently with their own MAC, IP, and mask addresses. If **REDUNDANCY** is set to Failover, the operation of ports 2 and 3 is as follows:

- Ports 2 and 3 use the port 2 MAC address, IP address, and mask
- The configuration fields for IP address and mask on port 3 are hidden
- Port 3 is in standby mode and does not actively communicate on the Ethernet network but monitors its link to the Multilink switch. If port 2 detects a problem with the link, communications is switched to Port 3. Port 3 is, in effect, acting as a redundant or backup link to the network for port 2. Once port 2 detects that the link between itself and the switch is good and that communication is healthy for five minutes, then switching back to port 2 is performed. The delay in switching back ensures that rebooted switching devices connected to the L90, which signal their ports as active prior to being completely functional, have time to completely initialize themselves and become active. Once port 2 is active again, port 3 returns to standby mode.

If **REDUNDANCY** is set to PRP, the operation of ports 2 and 3 is as follows:

- Ports 2 and 3 use the port 2 MAC address, IP address, and mask
- The configuration fields for IP address and mask on port 3 are overwritten with those from port 2. This is visible on the front panel but not displayed in the EnerVista software.
- Port 2 **MCST ADDRESS** field is visible
- The port 2 PTP function still uses only port 2 and the port 3 PTP function still uses only port 3. The relay still synchronizes to whichever port has the best master. When ports 2 and 3 see the same master, as is typically the case for PRP networks, the port with the better connectivity is used.

Behavior for GOOSE messages is as follows:

- If **REDUNDANCY** is set to Failover or PRP, In order to transmit a GOOSE message on port 2, the CID file must be configured to have the corresponding GSE element in both ConnectedAPs S2 and S3. In the EnerVista software, the **TxGOOSE PORT ASSIGNMENT** needs to be "Ports-1,2,3" to transmit GOOSE on both ports 1 and 2, or "Ports-2,3" to have GOOSE only on port 2, with failover/ PRP.

- If **REDUNDANCY** is set to PRP, the port 2 configured GOOSE message is simultaneously transmitted on ports 2 and 3
- If **REDUNDANCY** is set to failover and the port 2 link fails, then only the port 2 configured GOOSE message is transmitted on port 3

NOTE

The two ports must be connected to completely independent LANs with no single point of failure, such as common power supplies that feed switches on both LANs.

When **REDUNDANCY** is set to PRP or failover and the network path with resolved default gateway is broken, then the ARP table needs approximately five seconds to rebuild. The layer 2 protocols (GOOSE and PTP) are not affected. However, the TCP/IP or UDP protocols (MMS connections, DNP3.0, and so on) can require reconnection if their active connection does not ride through re-transmission frames.

For any changes to this setting to take effect, restart the unit.

PRT2 PRP MCST ADDR — This setting allows the user to change the multicast address used by the PRP supervision frames. This setting is available if **REDUNDANCY** is set to PRP. All devices in the same PRP network need to have the same multicast address. Choose an address that does not conflict with another multicast protocol.

5.3.5.5 Far-End Fault Indication (FEFI)

Since 100BASE-FX does not support Auto-Negotiation, a Far-End Fault Indication (FEFI) feature is included since UR 7 that allows for detection of link failures.

The purpose of the Far-End Fault feature is to allow the stations on both ends of a pair of fibers to be informed when there is a problem with one of the fibers. Without the Far-End Fault feature, it is impossible for a fiber interface to detect a problem that affects only its transmit fiber.

When the Far-End Fault feature is supported, a loss of receive signal (link) causes the transmitter to generate a Far-End Fault pattern in order to inform the device at the far end of the fiber pair that a fault has occurred.

When the local receiver again detects a signal, the local transmitter automatically returns to normal operation.

If a Far-End Fault pattern is received by a fiber interface that supports the Far-End Fault feature and it is enabled, it reacts by dropping the link as if there were no signal at all.

If the receiving interface does not support the Far-End Fault feature or has it disabled, an incoming Far-End Fault pattern is ignored.

It is strongly recommended to have switches used for substation automation that support the Far-End Fault feature, especially when UR 7 redundancy Failover is selected for redundancy.

5.3.5.6 Parallel Redundancy Protocol (PRP)

SOFTWARE OPTION

The L90 is provided with optional PRP capability. This feature is specified as a software option at the time of ordering. See the Order Codes section in chapter 2 for details.

The Parallel Redundancy Protocol (PRP) defines a redundancy protocol for high availability in substation automation networks. It applies to networks based on Ethernet technology (ISO/IEC 8802-3) and is based on the second edition (July 2012) of IEC 62439-3, clause 4.

PRP is designed to provide seamless recovery in case of a single failure in the network, by using a combination of LAN duplication and frame duplication. Identical frames are sent on two completely independent networks that connect source and destination. Under normal circumstances both frames reach the destination and one of them is sent up the OSI stack to the destination application, while the second one is discarded. If an error occurs in one of the networks and traffic is prevented from flowing on that path, connectivity is provided through the other network to ensure continuous communication. Take care when designing the two LANs, so that no single point of failure (such as a common power supply) is encountered, as such scenarios can bring down both LANs simultaneously.

Figure 5-16: Example of parallel redundant network

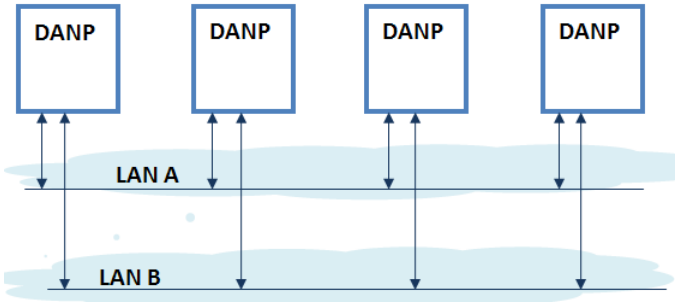

PRP uses specialized nodes called doubly attached nodes (DANPs) for handling the duplicated frames. DANP devices have an additional module, called a Link Redundancy Entity (LRE). LRE is responsible for duplicating frames and adding the specific PRP trailer when sending the frames out on the LAN, as well as making decisions on received frames as to which one is sent up the OSI stack to the application layer and which one is discarded. LRE is responsible for making PRP transparent to the higher layers of the stack.

In addition, there is a second type of specialized device used in PRP networks, called RedBox, with the role of connecting Single Attached Nodes (SANs) to a redundant network.

UR relays implement the DANP functionality. The RedBox functionality is not implemented.

The original standard IEC 62439-3 (2010) was amended to align PRP with the High-availability Seamless Redundancy (HSR) protocol. To achieve this, the original PRP was modified at the cost of losing compatibility with the PRP 2010 version. The revised standard IEC 62439-3 (2012) is commonly referred to as PRP-1, while the original standard is PRP-0. The UR relays support PRP-1.

The relay implements PRP on two of its Ethernet ports, specifically Ports 2 and 3 of the CPU module. Use the previous section (network port configuration) to configure PRP.

PRP is purchased as a separate option. If purchased (valid order code), PRP can be enabled in configuration through a setting available on the network configuration menu, REDUNDANCY, which already has the capability of enabling failover redundancy. The options on this setting must be changed to accommodate two types of redundancy: failover and PRP. When REDUNDANCY is set to either failover or PRP, the ports dedicated for PRP (Ports 2 and 3) operate in redundant mode. In this mode, Port 3 uses the MAC, IP address, and mask of Port 2.

5.3.5.7 IPv4 route table

SETTINGS ⇨ PRODUCT SETUP ⇨⇩ COMMUNICATIONS ⇨⇩ IPv4 ROUTE TABLE 1(6)

■ IPv4 ROUTE TABLE ■	⇔	■ DEFAULT IPv4 ROUTE ■
	⇩	■ IPv4 NETWORK ■ ROUTE 1
		⇩
	⇧	■ IPv4 NETWORK ■ ROUTE 6

A default route and up to six static routes can be configured.

The default route is used as the last choice when no other route towards a given destination is found.

■ DEFAULT IPv4 ROUTE ■	⇔	GATEWAY ADDRESS: 127.0.0.1	Range: standard IPV4 unicast address format
■ IPv4 NETWORK ■ ROUTE 1	⇔	RT1 DESTINATION: 127.0.0.1	Range: standard IPV4 address format

⇕	**RT1 NET MASK:** **255.0.0.0**	Range: standard IPV4 subnet mask format
⇧	**RT1 GATEWAY:** **127.0.0.1**	Range: standard IPV4 unicast address format

Configure the network IP and subnet settings before configuring the routing settings.

Add and delete static routes

Host routes are not supported at present.

The routing table configuration is available on the serial port and front panel. This is a deliberate decision, to avoid loss of connectivity when remotely configuring the L90.

By default, the value of the destination field is 127.0.0.1 for all static routes (1 to 6). This is equivalent to saying that the static routes are not configured. When the destination address is 127.0.0.1, the mask and gateway also must be kept on default values.

By default, the value of the route gateway address is 127.0.0.1. This means that the default route is not configured.

To add a route:

1. Use any of the static network route entries numbered 1 to 6 to configure a static network route. Once a route destination is configured for any of the entries 1 to 6, that entry becomes a static route and it must meet all the rules listed in the next section, General Conditions to be Satisfied by Static Routes.
2. To configure the default route, enter a default gateway address. Once a default gateway address is configured, it must be validated against condition 2 of the General Conditions to be Satisfied by Static Routes, where the route gateway must be on a connected network.

To delete a route:

1. Replace the route destination with the default loopback address of 127.0.0.1. When deleting a route, the mask and gateway also must be brought back to default values.
2. Delete the default route by replacing the default gateway with the default value of 127.0.0.1.

General conditions to be satisfied by static routes

The following rules are validated internally:

- The route mask has IP mask format. In binary this needs to be a set of contiguous bits of 1 from left to right, followed by one or more contiguous bits of 0.
- The route destination and mask must match. This can be verified by checking that
  RtDestination and RtMask = RtDestination
  Example of good configuration: RtDestination = 10.1.1.0; Rt Mask = 255.255.255.0
  Example of bad configuration: RtDestination = 10.1.1.1; Rt Mask = 255.255.255.0

The following rules must be observed when you configure static routes:

- The route destination must not be a connected network
- The route gateway must be on a connected network. This rule applies to the gateway address of the default route as well. This can be verified by checking that:
  (RtGwy & Prt1Mask) == (Prt1IP & Prt1Mask) || (RtGwy & Prt2Mask) == (Prt2IP & Prt2Mask) || (RtGwy & Prt3Mask) == (Prt3IP & Prt3Mask)

  where

  & is the bitwise-AND operator

  == is the equality operator

  || is the logical OR operator

Routing behavior compared to previous releases

Prior to release 7.10, UR devices did not have an explicit manner of configuring routes. The only available route was the default route configured as part of the network settings (port gateway IP address). This limited the ability to route to specific destinations, particularly if these destinations were reachable through a different interface than the one on which the default gateway was.

Starting with UR 7.10, up to six static network routes can be configured in addition to a default route. The default route configuration was also moved from the network settings into the routing section.

The figure shows an example of topology that benefits from the addition of static routes.

Figure 5-17: Using static routes

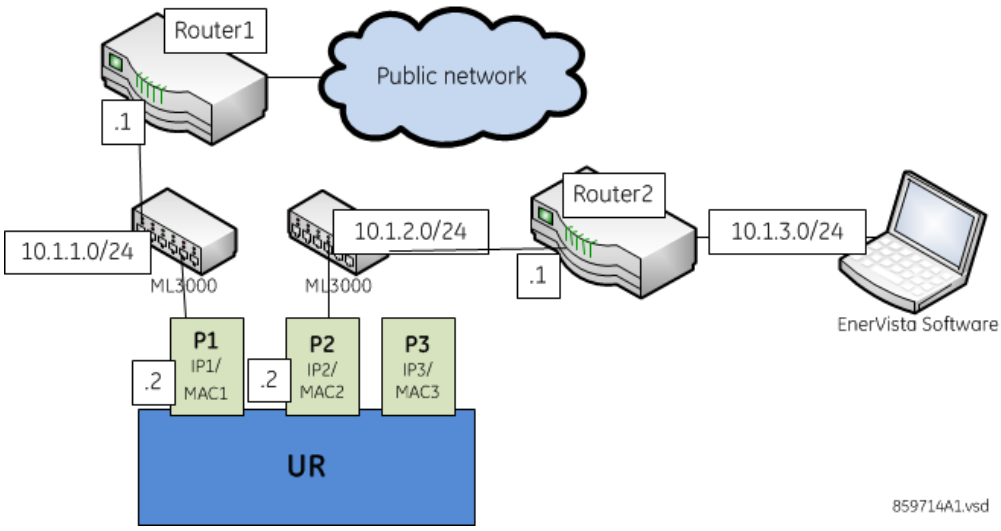

In the figure, the UR connects through the following two Ethernet ports:

- Port 1 (IP address 10.1.1.2) connects the UR to LAN 10.1.1.0/24 and to the Internet through Router1. Router1 has an interface on 10.1.1.0/24 and the IP address of this interface is 10.1.1.1.
- Port 2 (IP address 10.1.2.2) connects the UR to LAN 10.1.2.0/24 and to the EnerVista software through Router2. Router2 has an interface on 10.1.2.0/24 and the IP address of this interface is 10.1.2.1.

The configuration before release 7.10 was as follows:

- PRT1 IP ADDRESS = 10.1.1.2
  PRT1 SUBNET IP MASK = 255.255.255.0
  PRT1 GWY IP ADDRESS = 10.1.1.1
  PRT2 IP ADDRESS = 10.1.2.2
  PRT2 SUBNET IP MASK = 255.255.255.0

The behavior before release 7.10 was as follows. When sending packets to EnerVista, the UR noticed that the destination was not on a connected network and it tried to find a route to destination. Since the default route was the only route it knew, it used it. Yet EnerVista was on a private network, which was not reachable through Router1. Hence a destination unreachable message was received from the router.

The configuration starting with release 7.10 is as follows:

- PRT1 IP ADDRESS = 10.1.1.2
  PRT1 SUBNET IP MASK = 255.255.255.0
  PRT2 IP ADDRESS = 10.1.2.2
  PRT2 SUBNET IP MASK = 255.255.255.0
  IPV4 DEFAULT ROUTE: GATEWAY ADDRESS = 10.1.1.1
  STATIC NETWORK ROUTE 1: RT1 DESTINATION = 10.1.3.0/24; RT1 NET MASK = 255.255.255.0; and RT1 GATEWAY = 10.1.2.1

The behavior since release 7.10 is as follows. There is one added static network route to the destination 10.1.3.0/24, where a computer running EnerVista is located. This static route uses a different gateway (10.1.2.1) than the default route. This gateway is the address of Router2, which has knowledge about 10.1.3.0 and is able to route packets coming from the UR and destined to EnerVista.

Show routes and ARP tables

This feature is available on the Web interface, where the main menu contains an additional Communications menu and two submenus:

- Routing Table
- ARP Table

The tables outline the information displayed when the two submenus are selected.

Table 5-7: Routing table information

Field	Description
Destination	The IP address of the remote network to which this route points
Mask	The network mask for the destination
Gateway	The IP address of the next router to the remote network
Interface	Interface through which the specified network can be reached

Table 5-8: IP ARP information

Field	Description
IP Address	The network address that corresponds to Hardware Address
Age (min)	Age, in minutes, of the cache entry. A hyphen (-) means the address is local.
Hardware Address	LAN hardware address, a MAC address that corresponds to network address
Type	Dynamic or Static
Interface	Interface to which this address mapping has been assigned

5

5.3.5.8 Modbus protocol

SETTINGS ⇨ PRODUCT SETUP ⇨⇩ COMMUNICATIONS ⇨⇩ MODBUS PROTOCOL

■ **MODBUS PROTOCOL** ■	⇔	**MODBUS SLAVE ADDRESS: 254**	Range: 1 to 254 in steps of 1
	⇧	**MODBUS TCP PORT NUMBER(502): 502**	Range: 0 to 65535 in steps of 1

The serial communication ports utilize the Modbus protocol, unless the port is configured for DNP or IEC 60870-5-103 operation. This allows the EnerVista UR Setup software to be used on the port. UR devices operate as Modbus slave devices only.

For more information on the protocol, including the memory map table, see the UR Family Communications Guide.

MODBUS SLAVE ADDRESS — When using the Modbus protocol on the RS232 port, the L90 responds regardless of the **MODBUS SLAVE ADDRESS** programmed. For the RS485 port, each device on the serial bus must have a unique slave address from 1 to 254. Address 0 and addresses from 248 and up are reserved by the Modbus protocol specification, and so their use here is not recommended. Address 0 is the broadcast address to which all Modbus slave devices listen. Addresses do not have to be sequential, but no two devices can have the same address or conflicts resulting in errors occur. Generally, starting at 1, set each device added to the link to use the next higher address. When using Modbus TCP/IP, the client must use the programmed **MODBUS SLAVE ADDRESS** value in the Unit Identifier field.

MODBUS TCP PORT NUMBER — Modbus over TCP/IP can also be used on any of the Ethernet ports. The listening TCP port 502 is reserved for Modbus communications, and only in exceptional cases when **MODBUS TCP PORT NUMBER** is set to any other port. The **MODBUS TCP PORT NUMBER** setting sets the TCP port used by Modbus on Ethernet. A **MODBUS TCP PORT NUMBER** of 0 disables Modbus over TCP/IP, meaning closes the Modbus TCP port. When the port number is changed to 0, the change takes effect when the L90 is restarted. When it is set to 0, use the front panel or serial port to communicate with the relay.

NOTE

Do not set more than one protocol to the same TCP/UDP port number, as this results in unreliable operation of those protocols.

5.3.5.9 Protocol selection

SETTINGS ⇨ PRODUCT SETUP ⇨⇩ COMMUNICATIONS ⇨⇩ PROTOCOL

■ **PROTOCOL** ■	⇔	**SCADA PROTOCOL:** **DNP 3.0**	Range: DNP 3.0, IEC 60870-5-104, IEC 60870-5-103
	⇧	**MMS CONNECTION** **TIMEOUT: 120 s**	Range: 10 to 7200 in steps of 10

The **PROTOCOL** menu allows selection of one of the following protocols: DNP 3.0, IEC60870-104, or IEC60870-103.

SCADA PROTOCOL — This setting selects the SCADA protocol on which the unit communicates, among DNP3.0, IEC 60870-104, and IEC 60870-103, with DNP being the default. Options depend on order code. For any change to take effect, restart the unit.

MMS CONNECTION TIMEOUT — This setting specifies a time delay for the detection of network TCP connection lost. If there is no data traffic on the TCP connection for greater than the time specified by this setting, the connection is terminated. This frees up the connection to be re-used by a client. A setting of 10 seconds disables this timer. The TCP connection then is managed by a standard TCP KeepAlive message sequence. These messages are transmitted every 20 seconds when there is no MMS communication between the relay and the client. If there are no responses to the TCP KeepAlive messages, the connection is closed. For any change to this setting to take effect, restart the unit. The change takes effect for a new connection. For any existing open connection when the change is made, close and re-open the connection. Cycling power to the relay also applies the new setting.

The table shows which of DNP 3.0, IEC 60870-5-104, IEC 60870-5-103, and IEC 61850 protocols are operational on the RS232, RS485, and Ethernet ports. It shows all possible combinations of the **PROTOCOL** and **DNP CHANNEL 1(2) PORT** settings.

Table 5-9: Port and protocol combinations

PROTOCOL setting	DNP CHANNEL 1(2) PORT settings	RS232	RS485	Ethernet
DNP	Channel 1: Eth TCP Channel 2: Eth TCP	Modbus	Modbus	DNP, Modbus, IEC 61850
	Channel 1: Eth TCP Channel 2: none	Modbus	Modbus	DNP, Modbus, IEC 61850
	Channel 1: none Channel 2: Eth TCP	Modbus	Modbus	DNP, Modbus, IEC 61850
	Channel 1: Eth UDP Channel 2: none	Modbus	Modbus	DNP, Modbus, IEC 61850
	Channel 1: Eth TCP Channel 2: RS485	Modbus	DNP	DNP, Modbus, IEC 61850
	Channel 1: Eth TCP Channel 2: RS232	DNP	Modbus	DNP, Modbus, IEC 61850
	Channel 1: Eth UDP Channel 2: RS485	Modbus	DNP	DNP, Modbus, IEC 61850
	Channel 1: Eth UDP Channel 2: RS232	DNP	Modbus	DNP, Modbus, IEC 61850
	Channel 1: RS485 Channel 2: Eth TCP	Modbus	DNP	DNP, Modbus, IEC 61850
	Channel 1: RS232 Channel 2: Eth TCP	DNP	Modbus	DNP, Modbus, IEC 61850
	Channel 1: RS485 Channel 2: RS232	DNP	DNP	Modbus, IEC 61850
	Channel 1: RS232 Channel 2: RS485	DNP	DNP	Modbus, IEC 61850
	Channel 1: RS485 Channel 2: none	Modbus	DNP	Modbus, IEC 61850
IEC 104		Modbus	Modbus	IEC 104, Modbus, IEC 61850
IEC 103		Modbus	IEC 103	Modbus, IEC 61850

5

5.3.5.10 DNP protocol

SETTINGS ⇨ PRODUCT SETUP ⇨⇩ COMMUNICATIONS ⇨⇩ DNP PROTOCOL

■ DNP PROTOCOL ■	⇔	■ DNP CHANNELS ■	See below
	⇩	DNP ADDRESS: 1	Range: 0 to 65535 in steps of 1
	⇩	■ DNP NETWORK ■ CLIENT ADDRESSES	See below
	⇩	DNP TCP/UDP PORT NUMBER(20000): 20000	Range: 0 to 65535 in steps of 1
	⇩	DNP UNSOL RESPONSE FUNCTION: Disabled	Range: Enabled, Disabled
	⇩	DNP UNSOL RESPONSE TIMEOUT: 5 s	Range: 0 to 60 s in steps of 1
	⇩	DNP UNSOL RESPONSE MAX RETRIES: 10	Range: 1 to 255 in steps of 1
	⇩	DNP UNSOL RESPONSE DEST ADDRESS: 1	Range: 0 to 65519 in steps of 1
	⇩	DNP CURRENT SCALE FACTOR: 1	Range: 0.001, 0.01. 0.1, 1, 10, 100, 1000, 10000, 100000, 1000000, 10000000, 100000000

⇕	DNP VOLTAGE SCALE FACTOR: 1	Range: 0.001, 0.01. 0.1, 1, 10, 100, 1000, 10000, 100000, 1000000, 10000000, 100000000
⇕	DNP POWER SCALE FACTOR: 1	Range: 0.001, 0.01. 0.1, 1, 10, 100, 1000, 10000, 100000, 1000000, 10000000, 100000000
⇕	DNP ENERGY SCALE FACTOR: 1	Range: 0.001, 0.01. 0.1, 1, 10, 100, 1000, 10000, 100000, 1000000, 10000000, 100000000
⇕	DNP PF SCALE FACTOR: 1	Range: 0.001, 0.01. 0.1, 1, 10, 100, 1000, 10000, 100000, 1000000, 10000000, 100000000
⇕	DNP OTHER SCALE FACTOR: 1	Range: 0.001, 0.01. 0.1, 1, 10, 100, 1000, 10000, 100000, 1000000, 10000000, 100000000
⇕	DNP CURRENT DEFAULT DEADBAND: 30000	Range: 0 to 100000000 in steps of 1
⇕	DNP VOLTAGE DEFAULT DEADBAND: 30000	Range: 0 to 100000000 in steps of 1
⇕	DNP POWER DEFAULT DEADBAND: 30000	Range: 0 to 100000000 in steps of 1
⇕	DNP ENERGY DEFAULT DEADBAND: 30000	Range: 0 to 100000000 in steps of 1
⇕	DNP PF DEFAULT DEADBAND: 30000	Range: 0 to 100000000 in steps of 1
⇕	DNP OTHER DEFAULT DEADBAND: 30000	Range: 0 to 100000000 in steps of 1
⇕	DNP TIME SYNC IIN PERIOD: 1440 min	Range: 1 to 10080 min. in steps of 1
⇕	DNP MESSAGE FRAGMENT SIZE: 240	Range: 30 to 2048 in steps of 1
⇕	DNP OBJECT 1 DEFAULT VARIATION: 2	Range: 1, 2
⇕	DNP OBJECT 2 DEFAULT VARIATION: 2	Range: 1, 2, 3
⇕	DNP OBJECT 20 DEFAULT VARIATION: 1	Range: 1, 2, 5, 6
⇕	DNP OBJECT 21 DEFAULT VARIATION: 1	Range: 1, 2, 9, 10
⇕	DNP OBJECT 22 DEFAULT VARIATION: 1	Range: 1, 2, 5, 6
⇕	DNP OBJECT 23 DEFAULT VARIATION: 1	Range: 1, 2, 5, 6
⇕	DNP OBJECT 30 DEFAULT VARIATION: 1	Range: 1, 2, 3, 4, 5
⇕	DNP OBJECT 32 DEFAULT VARIATION: 1	Range: 1, 2, 3, 4, 5, 7
⇕	DNP NUMBER OF PAIRED CONTROL POINTS: 0	Range: 0 to 32 in steps of 1
⇕	DNP TCP CONNECTION TIMEOUT: 120 s	Range: 10 to 7200 s in steps of 1
⇧	DNP EVENT TIME BASE: LOCAL	Range: UTC, LOCAL

The Distributed Network Protocol (DNP) allows for the optimization of control and data acquisition between the equipment in the substation and the central control center. The protocol is scalable; that is, it is designed to be compatible with the latest high speed LAN technology yet still be implemented over slower speed serial links.

The DNP improves upon many master-slave protocols by improving overall communication performance requirements and provides time-stamping with millisecond accuracy.

The L90 supports the Distributed Network Protocol (DNP) version 3.0. DNP is enabled when the **SETTINGS ⇨ PRODUCT SETUP ⇨⇩ COMMUNICATIONS ⇨ PROTOCOL** setting is set to DNP 3.0. The L90 can be used as a DNP slave device connected to multiple DNP masters (usually an RTU or a SCADA master station). Since the L90 maintains two sets of DNP data change buffers and connection information, two DNP masters can actively communicate with the L90 at one time.

DNP is not available using the USB port on the graphical front panel.

See the UR Family Communications Guide for more information on DNP.

NOTE For any change to DNP settings, restart the relay.

The DNP Channels sub-menu is shown.

SETTINGS ⇨ PRODUCT SETUP ⇨⇩ COMMUNICATIONS ⇨⇩ DNP PROTOCOL ⇨ DNP CHANNELS

■ **DNP CHANNELS** ■	⇔	**DNP CHANNEL 1 PORT:** **NONE**	Range: NONE, COM1 - RS485, COM2 - RS485, FRONT PANEL - RS232, NETWORK - TCP, NETWORK - UDP
	⇧	**DNP CHANNEL 2 PORT:** **NONE**	Range: NONE, COM1 - RS485, COM2 - RS485, FRONT PANEL - RS232, NETWORK - TCP

5

The **DNP CHANNEL 1 PORT** and **DNP CHANNEL 2 PORT** settings select the communications port assigned to the DNP protocol for each channel. Once DNP is assigned to a serial port, DNP is the only protocol running on that port; Modbus or IEC 60870-5-103 are disabled. If DNP is assigned to RS485, the protocol must be set to DNP on the serial port configuration as well, for the change to take effect. When the **DNP CHANNEL 1(2) PORT** setting is set to “Network - TCP,” the channel 1(2) DNP protocol can be used over TCP/IP on the Ethernet ports. When this value is set to “Network - UDP,” the DNP protocol can be used over UDP/IP on channel 1 only. The "Front Panel - RS232" setting does not apply to the graphical front panel; when selected the DNP client cannot establish a connection on a USB port.

NOTE Do not set more than one protocol to the same TCP/UDP port number, as this results in unreliable operation of those protocols.

The **DNP ADDRESS** setting is the DNP slave address. This number identifies the L90 on a DNP communications link. Assign a unique address to each DNP slave.

The L90 can specify a maximum of five clients for its DNP connections. These are IP addresses for the controllers to which the L90 can connect. The settings follow.

SETTINGS ⇨ PRODUCT SETUP ⇨⇩ COMMUNICATIONS ⇨⇩ DNP PROTOCOL ⇨ DNP NETWORK CLIENT ADDRESSES

■ **DNP NETWORK** ■ **CLIENT ADDRESSES**	⇔	**CLIENT ADDRESS 1:** **0.0.0.0**	Range: standard IP address
		⇩	
	⇧	**CLIENT ADDRESS 5:** **0.0.0.0**	Range: standard IP address

The **DNP TCP/UDP PORT NUMBER** setting is for normal DNP operation. To close the port, set the port number to 0.

The **DNP UNSOL RESPONSE FUNCTION** is set to “Disabled” for RS485 applications since there is no collision avoidance mechanism. The **DNP UNSOL RESPONSE TIMEOUT** sets the time the L90 waits for a DNP master to confirm an unsolicited response. The **DNP UNSOL RESPONSE MAX RETRIES** setting determines the number of times the L90 retransmits an

unsolicited response without receiving confirmation from the master; a value of "255" allows infinite re-tries. The **DNP UNSOL RESPONSE DEST ADDRESS** is the DNP address to which all unsolicited responses are sent. The IP address to which solicited responses are sent is determined by the L90 from the current TCP connection or the most recent UDP message.

The DNP scale factor settings are numbers used to scale analog input point values. These settings group the L90 analog input data into the following types: current, voltage, power, energy, power factor, and other. Each setting represents the scale factor for all analog input points of that type. For example, if the **DNP VOLTAGE SCALE FACTOR** setting is set to "1000," all DNP analog input points that are voltages are returned with values 1000 times smaller (for example, a value of 72000 V on the L90 is returned as 72). These settings are useful when analog input values must be adjusted to fit within certain ranges in DNP masters. Note that a scale factor of 0.1 is equivalent to a multiplier of 10 (that is, the value is 10 times larger).

The **DNP DEFAULT DEADBAND** settings determine when to trigger unsolicited responses containing analog input data. These settings group the L90 analog input data into the following types: current, voltage, power, energy, power factor, and other. Each setting represents the default deadband value for all analog input points of that type. For example, to trigger unsolicited responses from the L90 when any current values change by 15 A, the **DNP CURRENT DEFAULT DEADBAND** setting is set to "15." Note that these settings are the deadband default values. DNP object 34 points can be used to change deadband values, from the default, for each individual DNP analog input point.

The **DNP TIME SYNC IIN PERIOD** setting determines how often the Need Time Internal Indication (IIN) bit is set by the L90. Changing this time allows the DNP master to send time synchronization commands more or less often, as required.

The **DNP MESSAGE FRAGMENT SIZE** setting determines the size, in bytes, at which message fragmentation occurs. Large fragment sizes allow for more efficient throughput; smaller fragment sizes cause more application layer confirmations to be necessary, which provides more robust data transfer over noisy communication channels.

NOTE

Check the "DNP Points Lists" L90 web page to view the analog inputs and/or binary inputs points lists. This page can be viewed with a web browser by entering the IP address of the L90 Ethernet port employed to access the L90 Main Menu, then by clicking the **Device Information Menu** item, then the **DNP Points Lists** item.

5

The **DNP OBJECT 1 DEFAULT VARIATION** to **DNP OBJECT 32 DEFAULT VARIATION** settings select the DNP default variation number for object types 1, 2, 20, 21, 22, 23, 30, and 32. The default variation refers to the variation response when variation 0 is requested and/or in class 0, 1, 2, or 3 scans. See the DNP Implementation section in the UR Family Communications Guide.

The DNP binary outputs typically map one-to-one to IED data points. That is, each DNP binary output controls a single physical or virtual control point in an IED. In the L90 relay, DNP binary outputs are mapped to virtual inputs. However, some legacy DNP implementations use a mapping of one DNP binary output to two physical or virtual control points to support the concept of trip/close (for circuit breakers) or raise/lower (for tap changers) using a single control point. That is, the DNP master can operate a single point for both trip and close, or raise and lower, operations. The L90 can be configured to support paired control points, with each paired control point operating two virtual inputs. The **DNP NUMBER OF PAIRED CONTROL POINTS** setting allows configuration of 0 to 32 binary output paired controls. Points not configured as paired operate on a one-to-one basis.

The **DNP TCP CONNECTION TIMEOUT** setting specifies a time delay for the detection of dead network TCP connections. If there is no data traffic on a DNP TCP connection for greater than the time specified by this setting, the connection is aborted by the L90. This frees up the connection to be re-used by a client.

NOTE

For any change to DNP settings, restart the relay.

5.3.5.11 DNP / IEC 60870-5-104 point lists

SETTINGS ⇨ PRODUCT SETUP ⇨⇩ COMMUNICATIONS ⇨⇩ DNP / IEC104 POINT LISTS

■ DNP / IEC104 ■ POINT LISTS	⇔	■ BINARY INPUT / MSP ■ POINTS	See below
	⇧	■ ANALOG INPUT / MME ■ POINTS	See below

Up to 256 binary and up to 256 analog input points for the DNP protocol, or the MSP and MME points for IEC 60870-5-104 protocol, can be configured. The value for each point is user-programmable and can be configured by assigning FlexLogic operands for binary inputs / MSP points or FlexAnalog parameters for analog inputs / MME points.

The menu for the binary input points (DNP) or MSP points (IEC 60870-5-104) follows.

SETTINGS ⇨ PRODUCT SETUP ⇨⇩ COMMUNICATIONS ⇨⇩ DNP / IEC104 POINT LISTS ⇨ BINARY INPUT / MSP POINTS

■ BINARY INPUT / MSP ■ POINTS	⇔	Point: 0 Off	Range: FlexLogic operand
	⇩	Point: 1 Off	Range: FlexLogic operand
	⇩		
	⇧	Point: 255 Off	Range: FlexLogic operand

Up to 256 binary input points can be configured for the DNP or IEC 60870-5-104 protocols. The points are configured by assigning an appropriate FlexLogic operand. See the Introduction to FlexLogic section in this chapter for the range of assignable operands.

Changes to the DNP / IEC 60870-5-104 point lists take effect when the L90 is restarted.

The menu for the analog input points (DNP) or MME points (IEC 60870-5-104) follows.

SETTINGS ⇨ PRODUCT SETUP ⇨⇩ COMMUNICATIONS ⇨⇩ DNP / IEC104 POINT LISTS ⇨⇩ ANALOG INPUT / MME POINTS

■ ANALOG INPUT / MME ■ POINTS	⇔	Point: 0 Off	Range: any FlexAnalog parameter
	⇩	Point: 1 Off	Range: any FlexAnalog parameter
	⇩		
	⇧	Point: 255 Off	Range: any FlexAnalog parameter

Up to 256 analog input points can be configured for the DNP or IEC 60870-5-104 protocols. The analog point list is configured by assigning an appropriate FlexAnalog parameter to each point. See the FlexAnalog Parameters section in Appendix A for the range of assignable parameters.

Changes to the DNP / IEC 60870-5-104 point lists take effect when the L90 is restarted.

NOTE

The DNP / IEC 60870-5-104 point lists always begin with point 0 and end at the first "Off" value. Since DNP / IEC 60870-5-104 point lists must be in one continuous block, any points assigned after the first "Off" point are ignored.

5.3.5.12 IEC 61850 protocol

SOFTWARE OPTION

The L90 is provided with optional IEC 61850 communications. This feature is specified as a software option at the time of ordering. See the Order Codes section in chapter 2 for details.

The IEC 61850 settings are accessible in EnerVista software or a substation configuration language (SCL) generating tool. The path is **Settings > Product Setup > Communications > IEC 61850** or **Settings > IEC 61850**. The settings are not accessible from the front panel of the device.

NOTE

IEC 61850 messaging can form part of protection schemes. Consider IEC 61850 settings with the same criticality as protection element settings. To ensure reliable performance of protection schemes utilizing IEC 61850 messaging, route IEC 61850 traffic on a separate port from SCADA communications, or use redundant, independent ports, and a high-speed network recovery method, such as PRP.

Overview

IEC 61850 is a series of international standards and technical reports applicable to power utility automation systems. It includes semantics, abstract communication services, specific communication services, performance specifications, network engineering guidelines, configuration description methodologies, and engineering processes. The standard enables interoperability among intelligent electronic devices (IEDs) from different suppliers and interoperability among software configuration tools from different suppliers. Interoperability in this case is the ability for IEDs to operate on the same network or communication path sharing information and commands, and for configuration tools to understand each other's configuration files.

The UR family supports a large subset of IEC 61850 features. These are detailed in the UR Family Communications Guide and include the information model, GOOSE publish, GOOSE subscribe, buffered report server, unbuffered report server, and Manufacturing Message Specification (MMS) query, read, write, and control services. In addition, the URs and their EnerVista UR Setup software support IEC 61850 Substation Configuration Language (SCL) file import/export and merging.

Whereas prior UR releases used edition 1.0 of IEC 61850, this release uses edition 2.0, with certain modifications according to IEC/TR 61850-90-5. Only edition 2.0 61850 configuration tools can interoperate with edition 2.0 devices, such as the UR 7.3x release. This UR release uses edition 2.0 SCL, which differs from edition 1.0 SCL. GSSE, fixed GOOSE, and fixed report services of previous releases are no longer supported, and thus UR devices of previous releases using these features have to be converted to configurable GOOSE to communicate with a 7.3x or later device.

Many settings of UR protection, control, and monitoring elements, that is to say elements that are not concerned with the IEC 61850 protocol, can nevertheless be accessed via IEC 61850. These settings are documented elsewhere in this Settings chapter. This section of the Settings chapter deals solely with the settings that configure the IEC 61850 protocol itself.

The maximum number of simultaneous clients supported by the UR family is five.

EnerVista setup for IEC 61850

The EnerVista UR Setup software provides the interface to configure L90 settings for the IEC 61850 protocol. This section describes this interface. The software also supports import/export and merging of IEC 61850 Substation Configuration Language (SCL) files as documented in the UR Family Communications Guide.

The IEC 61850 protocol configuration settings cannot be accessed through the UR front panel and are instead accessible with the EnerVista software, via MMS query, read, and write services, or via 61850 SCL file transfer. Accordingly, whereas other settings are presented in this manual as they appear on the front panel, IEC 61850 settings are presented as they appear in the software. See the UR Family Communications Guide for MMS and SCL access. Note that if you update the IEC 61850 settings in the EnerVista software by writing to them by MMS while the corresponding IEC 61850 panel is open in EnerVista, you need to close then open the panel in EnerVista for the correct readings to display.

IEC 61850 protocol configuration settings are accessed through software panels that are selected either in the **Online Window** area (see figure) or the **Offline Window** area in the EnerVista software.

The EnerVista software also includes an interface that is compatible with firmware versions 5.0 to 7.2 to configure subscribers. Use the Simplified GOOSE Configurator in the Offline Window area.

Figure 5-18: IEC 61850 panel example in EnerVista software

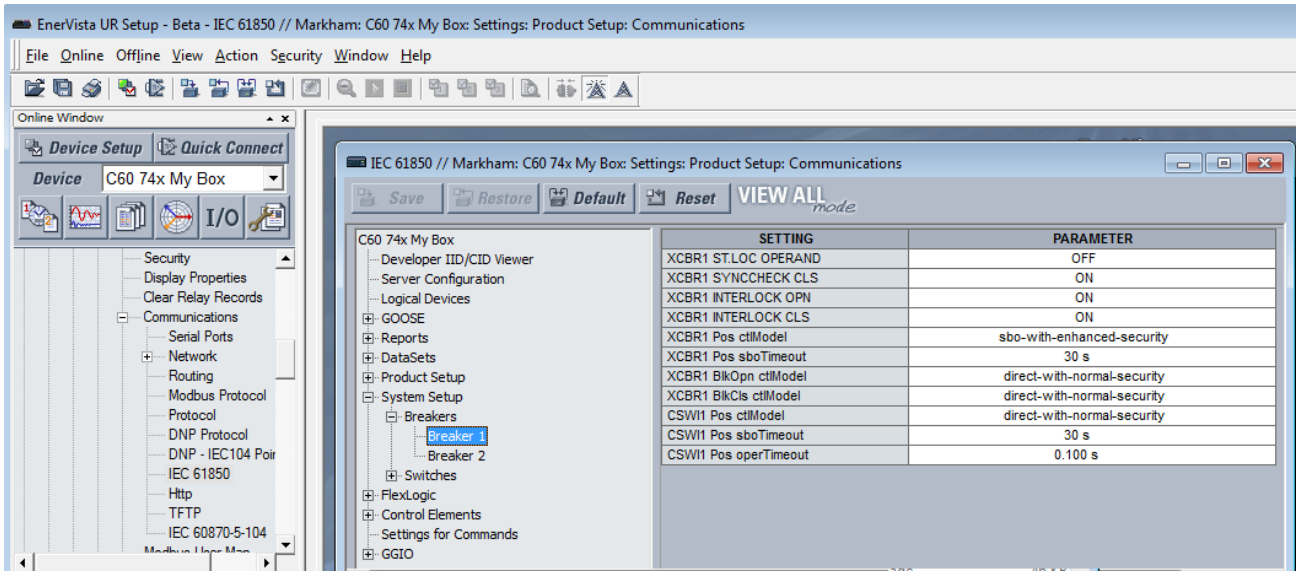

The IEC 61850 window is divided into a navigation pane on the left and a settings panel on the right. You expand and click an option on the left to display its panel on the right. The following figure shows an example for Server Configuration. The **SETTING** column contains the names of the settings, and the **PARAMETER** column is used to enter the settings. Hovering the mouse over a setting name displays a tool-tip showing the 61850 information model name of the setting or its location in SCL files.

5

Figure 5-19: IEC 61850 panel

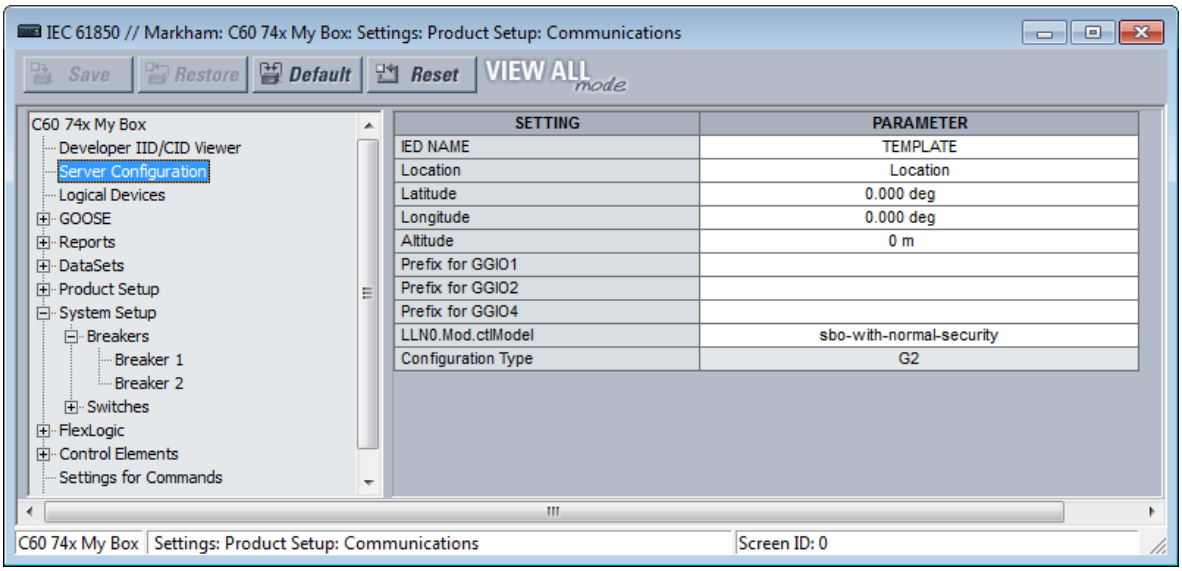

Opening the IEC 61850 window while online causes the UR Setup software to retrieve and import an SCL file from the L90. This System Configuration Description (SCD) file contains all the settings in the UR at the time of the file request, both those that are mapped into the IEC 61850 information model (that is, the "public" sections) and those that are not in the model (that is, the "private" section). The UR EnerVista Setup software imports all of these settings into the current session, not just those in the IEC 61850 window. To avoid loss of any unsaved setting changes made in other panels during the current session, all other panels for the L90 must be closed before the IEC 61850 panel can be opened, and the software prompts for this when applicable. Panels for other devices can be open concurrently to facilitate parameter coordination.

When CyberSentry security is enabled, editable settings depend on the user role logged in. For example, an Administrator and Engineer can change settings. If prompted for a "Settings password," it means the Administrator or Engineer password.

The **Restore** button restores settings in the window to their last saved values. The **Default** button reverts settings in the window to factory default values or Oscillography, Data Logger, or FlexLogic Equation Editor pre-configured values. The **Reset** button reverts all IEC 61850 settings to the factory default values, not just the current window. (In other settings windows, the button reverts settings in the window to factory default values.)

When a setting is enabled, its panel continues to read Disabled until relaunched. There is no polling capability to update automatically the IEC 61850 readings, so the panel needs to be closed then opened for the correct status to display. Good practice is to close any panel not in use because changes being made by other users too are reflected only upon relaunch of the panel.

Some of the IEC 61850 settings use floating point data, which guarantees accurate representation of real numbers up to seven digits. Numbers with more than seven digits are approximated within a certain precision. This can result in differences between what is entered and what is saved, and for example results in differences shown on a settings comparison report.

Create CID and settings files

When the **Save** button is clicked in the online IEC 61850 window, UR Setup software prepares a configured IED description (CID) file containing all the settings of the UR and sends the CID file to the L90. Upon receipt, the L90 checks the CID file for correctness, going out of service, then back into service when the CID file is accepted. The software displays a message when the L90 is running the new settings, confirming successful transfer. This process can take a minute or so due to the amount of processing required by the software and the L90.

When the **Save** button is clicked in the offline IEC 61850 window, UR Setup software saves to local storage, for example the hard drive, a .urs file containing all settings of the UR.

View IID/CID files

The file types are described as follows:

- IID — Instantiated IED capability description file — Actual settings on UR
- CID — Configured IED description file — Settings sent to the UR (may or may not contain the present settings)

IID and CID files are viewable. For example, after modifying settings in the IEC 61850 panels and clicking **Developer IID/ CID Viewer** in the software, a CID file generates and an SCL Viewer shows the updated CID file content. There are no edit or save functions; use instead the Back Up and Restore Settings instructions later in this document to save the files.

Searches are case insensitive.

Figure 5-20: View CID settings file

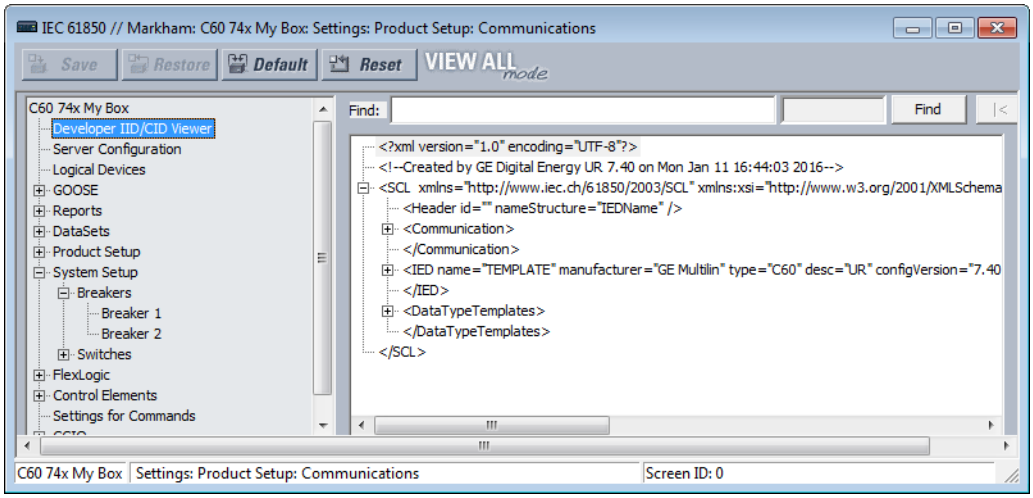

Server configuration

The Server Configuration panel contains IEC 61850 settings relevant to the server functions of the IED implementation.

The path is **Settings > Product Setup > Communications > IEC 61850 > Server Configuration**.

The following settings are available, where <iedName> is a syntactic variable representing the present value of the IED NAME setting.

IED NAME

Range: 1 to 58 VisibleString characters
Default: TEMPLATE

The value entered sets the IED name used by IEC 61850 for the L90. An IED name unique within the network must be entered for proper operation. Valid characters are upper and lowercase letters, digits, and the underscore (_) character. The first character must be a letter.

The **IED NAME** and the **Product LD inst name** comprise the <LDName> for a product. The longest LD inst are "Master" and "System" at six characters, with Master being fixed and the others configurable with the configurable Logical device feature. So the IED NAME needs to be restricted to 58 characters to meet a 64 character limit.

Location

Range: 0 to 255 ASCII characters
Default: Location

The value entered sets the value of the data attribute <LDName>/LPHD1.PhyNam.location. This data attribute is provided by the protocol to allow the user to declare where the equipment is installed.

Latitude

Range: -90.000 to 90.000 degrees in steps of 0.001 degree
Default: 0.000 deg

The value entered sets the value of the data attribute <LDName>/LPHD1.PhyNam.latitude. This data attribute is provided by the protocol to declare the geographical position of the device in WGS84 coordinates -latitude. Negative values indicate a southern latitude. WGS refers to the world geodetic system, which is used in global positioning systems (GPS), and 84 is the current version of the standard.

Longitude

Range: -180.000 to 180.000 degrees in steps of 0.001 degree
Default: 0.000 deg

The value entered sets the value of the data attribute <LDName>/LPHD1.PhyNam.longitude. This data attribute is provided by the protocol to declare the geographical position of the device in WGS84 coordinates -longitude. Negative values indicate a western longitude.

Altitude

Range: 0 to 10,0000 m in steps of 1 m
Default: 0 m

The value entered sets the value of the data attribute <LDName>/LPHD1.PhyNam.altitude. This data attribute is provided by the protocol to declare the geographical position of the device in WGS84 coordinates - altitude.

Prefix for GGIO1

Range: 0 to 11 VisibleString characters
Default:

This setting sets the LN Prefix of the FlexLogic operand interface logical node GGIO1 that is described in the GGIO1 section later. Valid characters are upper and lowercase letters, digits, and the underscore (_) character. The first character must be a letter. UR Setup software does not allow entry of a prefix that duplicates any other GGIO1 prefix that is used by the product, such as ConIn and ConOut.

Prefix for GGIO2

Range: 0 to 11 VisibleString characters

Default:

This setting sets the LN Prefix of the Virtual Inputs Interface logical node GGIO2 that is described in the GGIO2 section later. Valid characters are upper and lowercase letters, digits, and the underscore (_) character. The first character must be a letter. UR Setup software does not allow entry of a prefix that duplicates any other GGIO2 prefix that is used by the product.

Prefix for GGIO4

Range: 0 to 11 VisibleString characters

Default:

This setting sets the LN Prefix of the FlexAnalog operand interface logical node GGIO4 that is described in the GGIO4 section later. Valid characters are upper and lowercase letters, digits, and the underscore (_) character. The first character must be a letter. UR Setup software does not allow entry of a prefix that duplicates any other GGIO4 prefix that is used by the product.

LLN0.Mod.ctlModel

Range: status-only, direct-with-normal-security, sbo-with-normal-security

Default: sbo-with-normal-security

This setting specifies the control service that clients must use to control the TEST MODE FUNCTION of the L90. An "on" control to <LDName>/LLN0.Mod changes TEST MODE FUNCTION to Disabled, an "on-blocked" control changes it to Test, and a "test/blocked" changes it to Test-Blocked.

Configuration Type

Range: G2, E3-2.0

Default: G2

This setting is read only. It specifies the method used to describe GOOSE subscription configuration in SCL. See the UR Family Communications Guide for details. In the G2 mode, the CID file contains IED elements for IEDs subscribed to by this IED containing GOOSE subscription information. In the E3 2.0 mode, the CID file has only one IED element and GOOSE subscription information is coded in data objects in the standard LGOS logical node used to monitor reception of the subscribed GOOSE. UR 7.30 or later accepts either mode. The set value is for the entire EnerVista installation and is preserved between sessions. To change this global field, click **File > Preferences** and access the IEC 61850 panel; you do not need to be connected to the device.

Logical devices

The Logical Devices panel contains IEC 61850 settings relevant to the configurable logical devices feature, wherein logical device naming can be reconfigured and logical nodes re-assigned.

The path is **Settings > Product Setup > Communications > IEC 61850 > Logical Devices**.

Figure 5-21: Default IEC 61850 Logical Devices panel with devices middle and nodes right

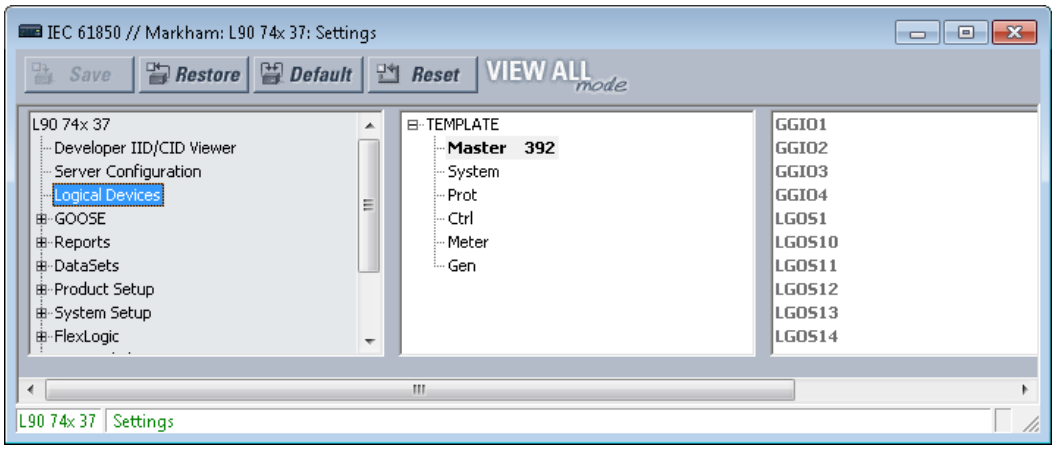

To configure logical devices and nodes:

1. Right-click an entry and edit an existing device, add a new one, or move a logical node. The rest of this section explains the window and how to perform these actions.

The default logical device categories are as follows:

- **Master** — Communications, including GOOSE, reports, Remote I/O, Virtual Inputs, Modbus, DNP, and setting group control
- **System** — Power system devices: breakers, switches, CTs, VTs, and so on, including interfaces to these, such as AC inputs, contact I/O, transducer I/O, HardFiber I/O
- **Prot** — Protection and protection-related functions
- **Ctrl** — Control and monitoring functions
- **Meter** — Metering and measurement functions
- **Gen** — FlexLogic, Virtual Outputs, non-volatile latches, FlexElements, recording (for example oscillography), security, front panel, clock

For the Master logical device, the following logical nodes have fixed assignment:

- The LLN0 in the Master logical device, which includes setting group, GOOSE and report control blocks, and datasets
- LPHD1 — Models common issues for physical devices
- GGIO1 — For unmapped FlexLogic operands
- GGIO2 — For Virtual Input control
- GGIO3 — For RxGOOSE Inputs
- GGIO4 — For unmapped FlexAnalog operands
- LGOS logical nodes — For GOOSE subscription

The Logical Devices panel has middle and right panes. The middle pane has a list of the instantiated logical devices in the sequence that they appear in SCL, with one device selected. The right pane has a list of the logical nodes presently assigned to the selected logical device in lexicographic order by logical node name.

In the middle pane logical devices are shown with their product-related name, followed in brackets by their function-related ldName, and followed by the value of their confRev. In the following example, by right-clicking and editing, the Protection logical device has been set to instance name "Prot", the function-related name "Feeder1Prot" and the configuration revision "2016-03-07 08:46." The text is clipped on the right if the line is longer than the available width. The next paragraphs explain how to do this setup.

Figure 5-22: Protection logical node selected

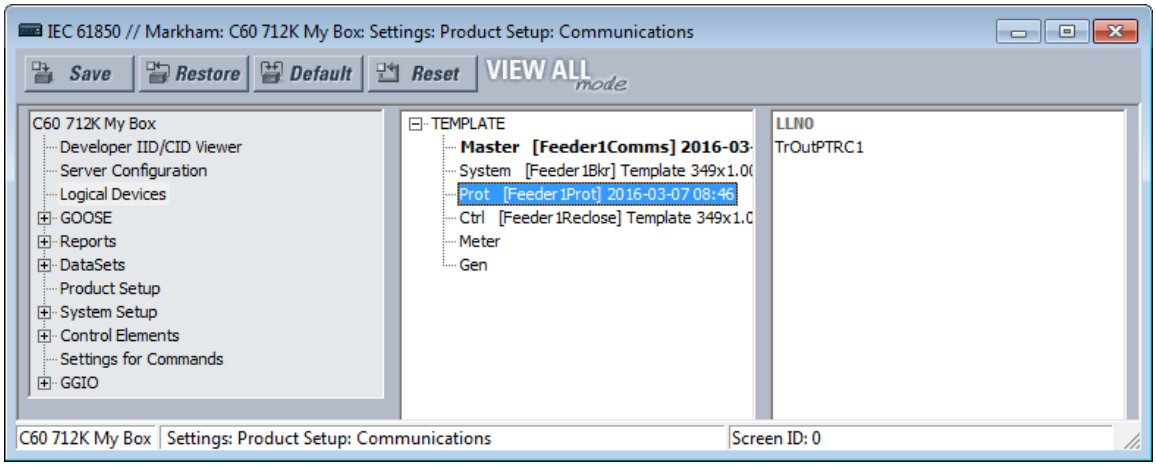

Right-clicking a logical device displays the menu that allows insertion of a new logical device immediately below the selected one, deletion of the selected logical device, or editing the selected logical device's parameters. The insert option is disabled and greyed-out if there are already 16 logical devices instantiated. The delete option is disabled and greyed-out if the selected logical device is Master or it contains any logical nodes other than LLN0.

Figure 5-23: Menu for logical node

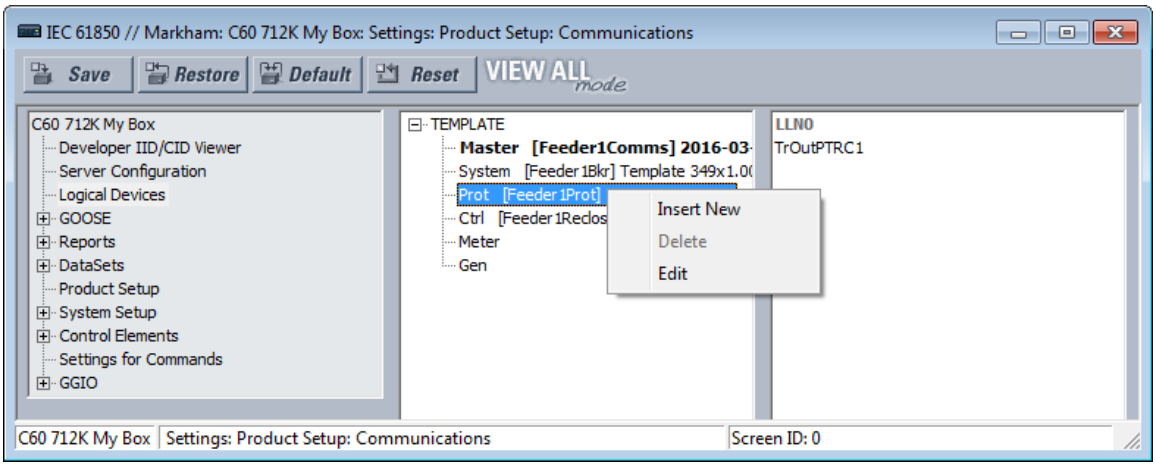

If the insert option is selected, or the edit option is selected for other than the Master logical device, a logical device parameters edit dialog opens.

Figure 5-24: Insert new logical node

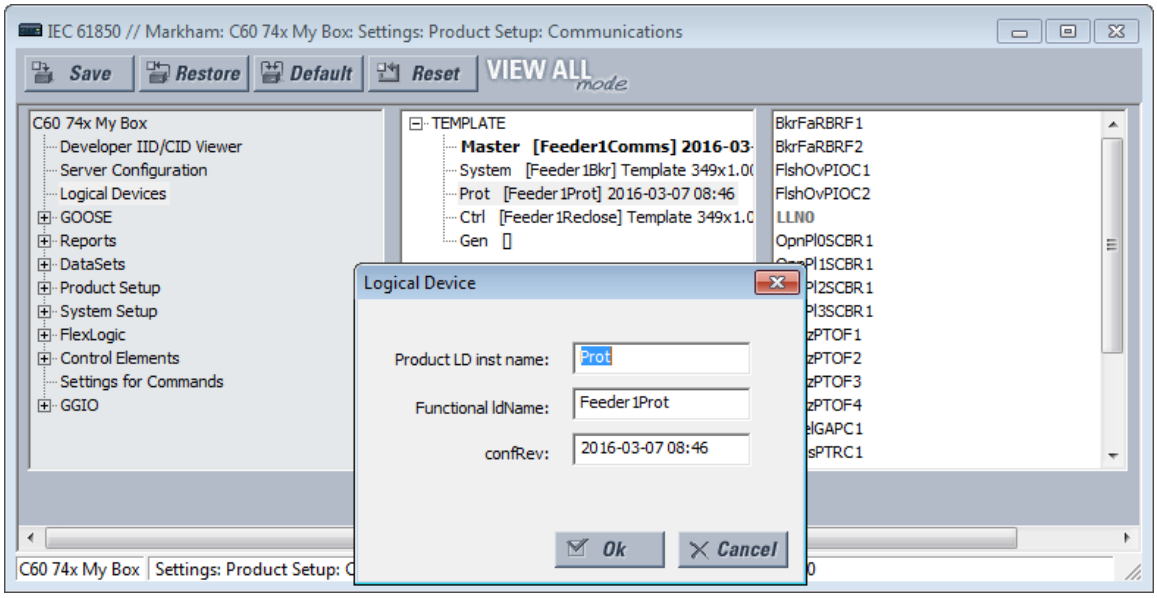

If the edit option is selected for the Master logical device, the **Product LD inst name** setting is not editable.

Figure 5-25: Edit logical node

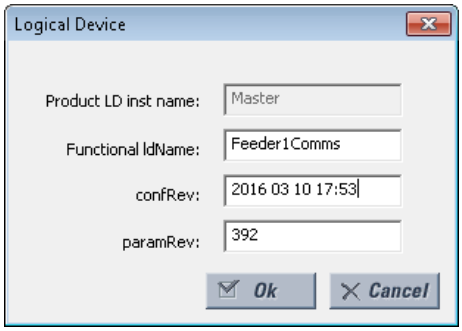

When the **Ok** button is clicked, the entered values for **Product LD inst name** and **Functional ldName** are checked for uniqueness within the UR, and they are updated in the pane.

The settings are explained as follows, where <iedName> is a syntactic variable representing the present value of the IED NAME setting. When adding or editing a logical device entry, these are the fields that need to be completed.

NOTE

Customized logical nodes are not saved in the URS file.

Product LD inst name

Range: 1 to 64 VisibleString characters

Default: as per the following table

Each logical device has this setting. The value is fixed at "Master" in the first logical device and configurable in all others. Valid characters are upper and lowercase letters, digits, and the underscore (_) character. The entered value sets the logical device inst name. Each logical device inst name is required to be unique within the device, and it cannot be blank. Also, if the corresponding functional ldName setting is blank, the concatenation of the IED name and the logical device

inst name must form an LDName that is unique within the network for proper operation. It is recommended that the length of the IED NAME plus the length of this setting be not greater than 64 to respect the requirements of IEC 61850 7 2:2010 22.2 for LDName.

The factory default configuration is for six logical devices with Product LD inst name settings and logical node assignments as per the following table.

Table 5-10: Factory default logical nodes

Default logical device inst name	Contains logical nodes modeling...
Master (root logical device; name is fixed)	communications, including GOOSE, reports, Remote I/O, Virtual Inputs, Modbus, DNP, and so on. Setting group control. This is the root logical device. To comply with IEC 61850 7 1 Ed2 clause 6.4.5.1, all group L logical nodes (logical nodes with class names begin with "L"), except LLN0, belonging to this IED are in this logical device.
Protection (Prot)	protection functions
Control (Ctrl)	control and monitoring functions
System	power system devices: breakers, switches, CTs, VTs, and so on, including interface to these such as AC inputs, contact I/O, transducer I/O, HardFiber I/O
Metering (Meter)	metering and measurement (other than PMU), including Signal Sources
General (Gen)	FlexLogic, virtual outputs, non-volatile latches, FlexElements, FlexMath, recording (for example oscillography), security, front panel, clock

Functional ldName

Range: 0 to 64 VisibleString characters

Default: empty string

Each logical device has this setting. The value is configurable in all logical devices. Valid characters are upper and lowercase letters, digits, and the underscore (_) character. If the number of characters entered is greater than zero, the setting sets the value of the function-related name used in communications. If an ldName is entered, it must form an LDName that is unique within the network for proper operation. The standard recommends choosing this name according to IEC 81346-1. If the number of characters entered is zero, no function-related name is defined.

NOTE

Throughout the remainder of this IEC 61850 section, <LDName> is a syntactic variable representing the present LDName of the master logical device. In other contexts LDName can refer to some other logical device. Depending on its context, <LDName> can be a product-related name or a function-related name.

configRev

Range: 0 to 255 ASCII characters

Default:

This data attribute is provided by the protocol to declare changes to the semantic of the data model of the UR. The intent is that the user changes Master configRev each time that the semantic or data model changes, so that clients can readily detect the change. A semantic change is a logical node getting a new semantic use; for example, an instance of logical node CSWI is now serving a different physical switch, or an instance of a logical node PDIS is now used for another zone. A data model change is a change in the presence of logical nodes, data objects, data attributes, or instance names.

The scope of Maser configRev is the entire relay configuration, as the Master logical device is the root logical device. Similar settings are provided for the other logical nodes; the scope of these other configRev settings is limited to the corresponding logical device configuration.

paramRev

Range: -2,147,483,648 to 2,147,483,647

Default: 0

The configurable data attribute paramRev has a scope that includes the entire device, and thus is modified whenever any setting in the device changes. The UR increments the value of paramRev by one whenever one or multiple setting changes occurs in one Modbus write request by any means (front panel, Modbus, or MMS) other than by SCL file

download. Incrementing occurs whether or not the setting is represented in the information model. When a UR device or EnerVista UR Setup accepts an SCL file, paramRev is set to the value in that SCL file. When EnerVista UR Setup changes one or more settings, and prepares an SCL file, it increments paramRev to the next higher multiple of 10 000.

NOTE

Each logical device has a name: LDName. (Note the upper case LD.) LDName has both a product-related form and a function-related form as per IEC 61850 6:2009 8.5.3.

SCL files invariably use the product-related form of LDName. The product-related form is the concatenation of the IED name of the device and the individual logical device's inst name. The IED name is the value of the "IED NAME" setting on the Server Configuration panel, and the logical device inst names are each the value of the corresponding "Product LD inst name" setting here. The "Product LD inst name" of the first logical device is fixed at "Master".

Communications use the function-related form of LDName if a function-related name is defined, otherwise communications use the product-related name. The function-related name is the value of the corresponding "Functional ldName" setting if this setting is not empty, if empty the function-related name is not defined.

In SCL, the function-related name is specified by the LDevice element attribute ldName (note the lower case ld). Absence of this attribute indicates the function-related name is not defined. In SCL the product-related name is specified by the name attribute of the IED element and the inst attribute of the LDevice element.

In the right pane, logical nodes assigned permanently to the Master logical device and LLN0 in all logical devices are greyed-out as shown earlier. These are not movable. Any other logical node can be dragged to any of the logical devices in the middle pane, which causes that logical device to be re-assigned to that logical device. Right-clicking a logical node device displays a menu that lists the logical devices that this logical node can be moved to. Clicking one of these re-assigns the logical node. Other common keyboard and/or mouse action can be used to select one or more logical nodes and move the selected nodes together.

5

Figure 5-26: Move logical node

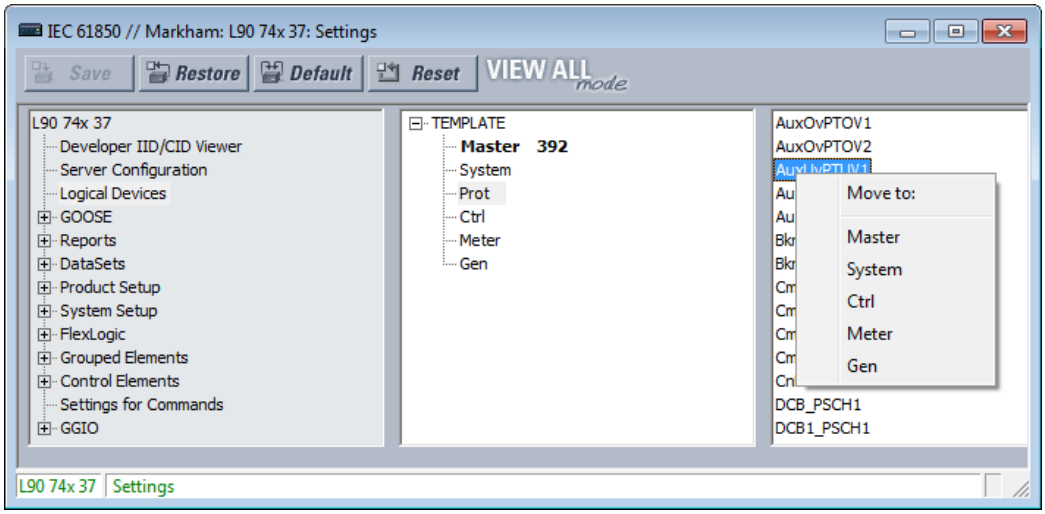

GOOSE

The path is **Settings > Product Setup > Communications > IEC 61850 > GOOSE**.

Support for Routable GOOSE

Routable GOOSE (R-GOOSE) is supported in firmware release 7.4 and later. Routable GOOSE allows UR and other devices to be located in separate networks. Encryption/decryption of messages is performed by a separate gateway device. Messages are routed using a separate router, using IP addresses.

Note the following behavior:

- A v7.4 device can send an R-GOOSE message to another v7.4 device when both have R-GOOSE active as the protocol
- A v7.4 device can send a GOOSE message to another v7.4 device when both have GOOSE active as the protocol

- A v7.4 device cannot send an R-GOOSE message to non-R-GOOSE devices, such as v7.3 or v5.9 UR device
- UR devices with firmware below v7.3 can send a GOOSE message to a v7.4 device that has GOOSE as the active protocol

NOTE

R-GOOSE is available through the IEC 61850 software option. If R-GOOSE security is required, the CyberSentry software option also must be purchased.

TxGOOSE

IEC 61850 GOOSE is an efficient method for simultaneous high-speed delivery of generic substation event information by a publishing device to more than one subscribing device. A TxGOOSE is a UR element implementing a single IEC 61850 GOOSE message publishing service. The subscribing function in URs is performed by RxGOOSE elements, as described in the next section. Each UR with IEC 61850 order code options has 16 TxGOOSE elements. Each TxGOOSE can either use the original format specified in IEC 61850 8 1:2011 or the routable GOOSE (R-GOOSE) format specified in IEC TR 61850-90-5:2012. Each TxGOOSE element can publish the values of up to 64 attributes of the IEC 61850 nodes in the UR.

Published TxGOOSE messages configured in the EnerVista UR Setup software can be subscribed by and the published operand values understood by other UR devices. Furthermore, they can be subscribed to and understood by any device of any manufacturer that implements the IEC 61850 edition 1.0 or 2.0 GOOSE subscription mechanism. The messages are published with a multicast address so that the network sends the messages to all devices; any number of devices that want to subscribe can.

For wide area protection, control, and monitoring schemes, R-GOOSE wraps the proven original format GOOSE in IP/UDP to multicast (or unicast) the data over a Wide Area Network (WAN). Sample applications are Wide area Remedial Action Scheme (RAS) and Under Voltage/ Frequency Load Shedding Schemes (UVLS/UFLS). R GOOSE uses IGMPv3 (Internet Group Management Protocol version-3, RFC 3376) for multicasting.

The entities whose values are published in GOOSE messages are known as members. The members are itemized in an ordered list known as a data set. Each TxGOOSE can use any one of the configured data sets. (See the DataSets section later for details.) The performance of a TxGOOSE is determined by its dataset. Booleans in fast GOOSE datasets are designed for the TT6 transfer time class (3 ms), while Booleans in the Normal datasets are designed for the TT3 class (100 ms). Due to the significant amount of CPU time required to compose a TT6 TxGOOSE message and the limited amount of time allowed by the TT6 class, at most four of these can be configured in a given UR. So only four fast GOOSE are allowed to be configured, and the UR software has a check to disallow the use of more than four fast datasets in GOOSE. If six fast datasets are configured outside of UR software and the file sent directly to the relay, the relay rejects the file. The design does allow six fast datasets to be used in report control blocks, which allows fast scanned data in reports.

Each enabled TxGOOSE transmits its message whenever a value change is detected in one or more of its members. If the changed value is a Boolean in a fast dataset, then the change detect occurs in the TT6 detection time of 3 ms or less. If the member is an analog value in a fast dataset, the change detect occurs in the TT3 time of 100 ms. In Normal GOOSE Datasets, change detection for all dataset members occurs in the TT3 time of 100 ms. To guard against the possibility that such a message is lost in the network before it reaches all subscribers, the message is quickly retransmitted several times. To allow subscribers to verify that their link to the publisher and the publisher itself are healthy, each message is also retransmitted periodically even while the values are unchanging. These latter messages are known as heartbeat messages, while the former are known as event messages. Heartbeat messages also provide means for a subscriber newly online to receive the published values in the absence of an event.

The details of TxGOOSE message construction are contained in the UR Family Communications Guide. Knowledge of these details is not required to configure GOOSE.

The UR does not implement the Fixed-Length encoded GOOSE messages option specified in IEC 61850-8-1:2011 clause A.3; the UR always uses the ASN.1 Basic encoding rules (as specified in ISO/IEC 8825-1) as specified in IEC 61850 edition 1.0 and as optional in IEC 61850 edition 2.0.

Navigate to **Settings > Product Setup > Communications > IEC 61850 > GOOSE > TxGOOSE > TxGOOSE1** to access the settings for the first TxGOOSE. The settings and functionality for the others are similar.

Figure 5-27: IEC 61850 TxGOOSE panel

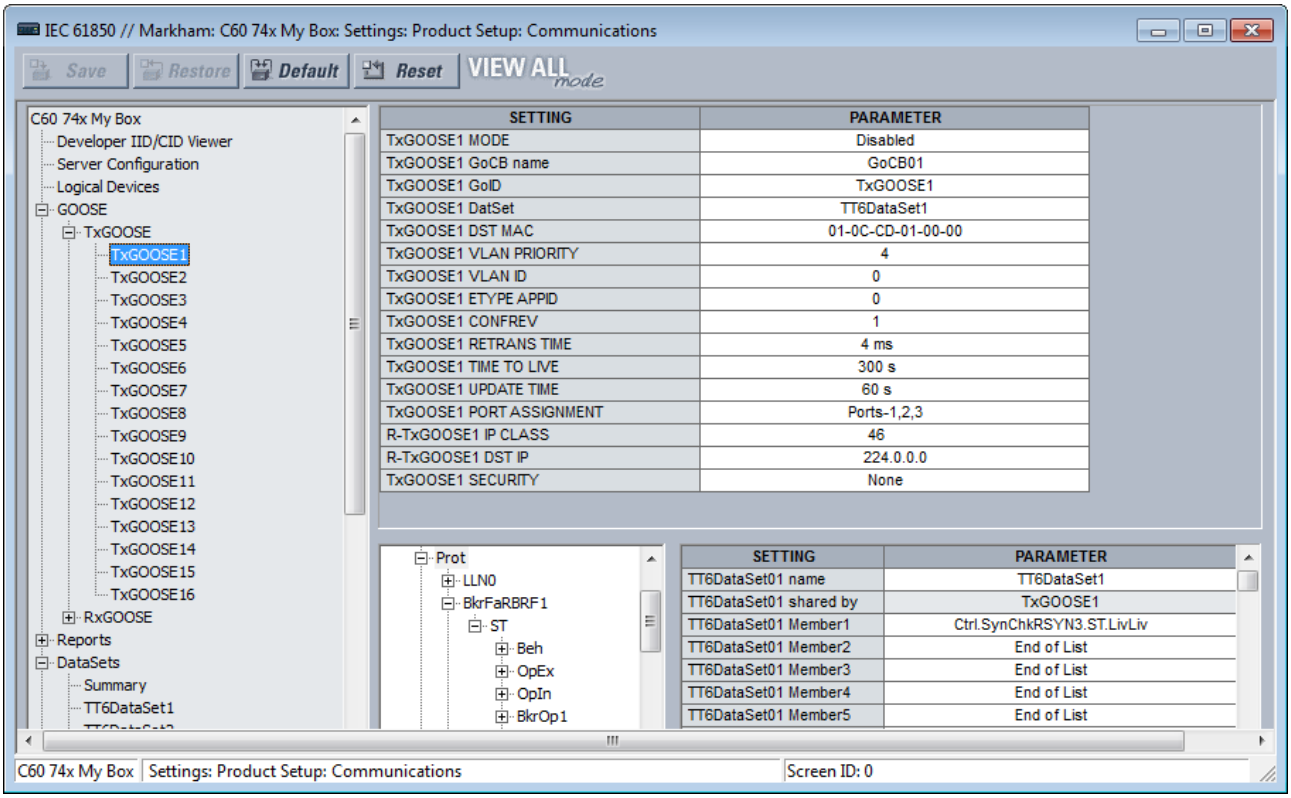

A data set needs to be set up and selected in the **TxGOOSEx DatSet** field for all content to display.

When saving changes, when a "dataset member is empty" message displays, you need to set the member in the bottom right of the window.

TxGOOSE1 MODE

Range: Disabled, GOOSE, R-GOOSE

Default: Disabled

When set to Disabled, TxGOOSE1 messages are not published. When set to GOOSE, TxGOOSE1 messages are published in IEC 61850 8 1:2011 GOOSE format. When set to R-GOOSE, TxGOOSE1 messages are published in Routable GOOSE format according to IEC 61850 90-5, and the **TxGOOSE1 DST MAC** address is set to 00 00 00 00 00 00 and cannot be changed.

TxGOOSE1 GoCB name

Range: 0 up to 32 VisibleString characters

Default: GoCB01

The entered value sets the GOOSE control block (GoCB) name value for TxGOOSE1.

An ObjectReference to the control block, which consists of the concatenation of the string "<LDName>/LLN0." and the control block name, is published in the gocbRef field of TxGOOSE1 messages and is used by subscribers to discriminate TxGOOSE1 messages from other GOOSE messages. <LDName> is a syntactic variable that is set to the value of setting Master functional ldName if one or more characters have been entered to that setting, otherwise the value of setting IED NAME suffixed with "Master".

TxGOOSE1 GoID

Range for Edition 2: 0 to 129 Visible String characters
Range for Edition 1: 0 to 65 Visible String characters
Default: TxGOOSE1

The entered value sets the goID value published in TxGOOSE1 messages, and can be used by subscribers to discriminate the TxGOOSE1 messages from other GOOSE messages.

TxGOOSE1 DatSet

Range: None, TT6DataSet1,TT6 DataSet2, ... TT3DataSet01,TT3 DataSet02, ...
Default: None

This setting selects the published data set using the UR Setup software designator for the data set. If None is selected, no TxGOOSE1 messages are sent.

The IEC 61850 name of the data sets are configured in the Datasets panel, as described later.

Some datasets are designed for the TT6 transfer time class (3 ms), while others are designed for the TT3 class (100 ms). The performance of a TxGOOSE is determined by its dataset. Use TT6 datasets for trips and blocking applications, TT3 datasets for slow automatic interactions. The 61850 name of the datasets are configured in the Datasets panel.

An ObjectReference to the data set, which consists of the concatenation of the string "<LDName>/LLN0." and the data set name, is published in the datSet field of TxGOOSE1 messages and can be used by subscribers to discriminate TxGOOSE1 messages from other GOOSE messages. <LDName> is a syntactic variable that is set to the value of setting Master functional ldName if one or more characters have been entered to that setting, otherwise the value of setting IED NAME suffixed with "Master".

To configure a DataSet, select it at the top of the window from the drop-down list. In the lower part of the window, drag and drop configuration items to the right side. Dataset members configured here affect other Report or TxGOOSE control blocks that use the same DataSet.

The performance of the TxGOOSE is determined by the performance of the selected dataset. When the selection is TT3DataSet01, TT3DataSet02, ... it is possible that transient events can be missed.

TxGOOSE1 DST MAC

Range: any 12 digit hexadecimal number
Default: 01-0C-CD-01-00-00

When the **TxGOOSE1 MODE** setting is R-GOOSE, the **TxGOOSE1 DST MAC** address is set to 00 00 00 00 00 00 and cannot be changed. Otherwise, the value entered here sets the Ethernet destination Media Access Control (MAC) address in published TxGOOSE1 messages. As the standard requires that the address have the multicast bit set TRUE, that is to say the second digit is set to an odd number, messages transmitted have the multicast bit set TRUE no matter its value in this setting.

The destination MAC address can be used by the network to restrict message delivery to selected devices that need to receive them, reducing network load. This address also can be used by hardware in receiving devices to filter out messages that are of no interest to them, reducing processor burden. Different filtering algorithms are implemented by different devices. The standard recommends that the algorithm used by hardware of the receiving device be considered when assigning destination multicast addresses.

Subscribers can use this address to discriminate TxGOOSE1 messages from other GOOSE messages.

TxGOOSE1 VLAN PRIORITY

Range: 0, 1, 2, 3, 4, 5, 6, 7, 5-4, 6-4, 6-5, 7-4, 7-5, 7-6
Default: 4

When the value entered is 0, 1, 2, 3, 4, 5, 6, or 7, the User Priority value in the IEEE 802.1Q VLAN tag included in published TxGOOSE1 messages is set to that value. When one of the two-digit values is entered, the dynamic priority feature is selected: the first event message has the User Priority value of the first digit, and User Priority is decremented in each following message until reaching the value of the second digit. For instance, if the selected value is 7-5, then the User Priority values in successive messages beginning with the message triggered by an event is 7, 6, 5, 5, 5, 5, 5, and so on. Do not make a dynamic priority selection when standard behavior is required.

Network devices can forward a message with a higher priority value before a message with a lower priority value, which speeds delivery of high-priority messages in heavily loaded networks. The standard recommends that higher-priority messages, such as GOOSE, have priority values in the range of 4 to 7.

TxGOOSE1 VLAN ID

Range: 0 to 4095 in steps of 1

Default: 0

The value entered sets the VID value in the IEEE 802.1Q VLAN tag included in published TxGOOSE1 messages. VID can be used by network devices to direct messages to only selected devices, reducing network burden. VID values of 0 and 1 are assigned by IEEE 802.1Q to other functions and are not to be used for GOOSE.

TxGOOSE1 ETYPE APPID

Range: 0 to 65535 in steps of 1

Default: 0

The value entered sets the APPID value in published GOOSE messages and can be used by subscribers to discriminate TxGOOSE1 messages from other GOOSE messages.

The standard reserves the value range 0 to 16383 for GOOSE Type 1 (Fast messages), and reserves the value range 32768 to 41151 for GOOSE Type 1A (Trip messages). Some subscribers can process messages in the Type 1A range faster than messages in the Type 1 range. The standard reserves the default value (0) to indicate lack of configuration. The standard strongly recommends unique, source-orientated APPIDs within a given system.

TxGOOSE1 CONFREV

Range: 0 to 4294967295 in steps of 1

Default: 1

The entered value sets the confRev value in published GOOSE messages and can be used by subscribers to discriminate TxGOOSE messages of the expected configuration revision from messages of a different revision. The standard requires that CONFREV be incremented each time the members or the order of the members published is changed. The standard states that the value of 0 is reserved.

TxGOOSE1 RETRANS TIME

Range: 0 to 100 ms in steps of 1 ms

Default: 4 ms

If the entered time is non-zero, when a member value change is detected, four event transmissions are sent, then heartbeat transmissions resume. The interval between the first and second event transmissions, and between the second and third, is the time set here. The interval between the third and the fourth event transmission is double the set time. If the entered time is zero, only a single event transmission occurs, then heartbeat transmissions resume.

TxGOOSE1 TIME TO LIVE

Range: 1 to 300 s in steps of 1 s

Default: 300 s

The value entered sets the timeAllowedtoLive value in published TxGOOSE1 messages. The standard requires subscribers to assume a failure has occurred when another TxGOOSE1 message is not received within the published timeAllowedtoLive time.

Base this setting on the **TxGOOSE UPDATE TIME** and the tolerable number of contiguous message delivery misses. For example, if the heartbeat time is 10 s, and missing up to three successive messages is tolerable, make the setting 10 * 3 + 1 = 31 s. The extra second is to ensure that arrival of the third heartbeat transmission beats the timeAllowedtoLive timer.

TxGOOSE1 UPDATE TIME

Range: 1 to 60 s in steps of 1 s

Default: 60 s

This setting specifies the time interval between heartbeat messages, meaning messages that are sent periodically while no events are detected.

TxGOOSE1 PORT ASSIGNMENT

Range: Disabled, Port-1; Port-2; Port-3; Ports-1,2; Ports-2,3; Ports-1,3; Ports-1,2,3

Default: Ports-1,2,3

This setting specifies the Ethernet ports for transmission of TxGOOSE1. When set to disabled, TxGOOSE1 messages are not transmitted on any port no matter the state of GoEna. When set to Port-1, TxGOOSE1 is published over Ethernet Port-1 only; while selecting Ports-1, 3 option, the same TxGOOSE1 is published to both Ports 1 and 3; and similarly if set to Ports-1,2,3, all ports publish TxGOOSE1.

NOTE

When setting **PRT2 REDUNDANCY** to Failover or to PRP, the TxGOOSE 1 port assignment needs to be set to ports 2 and 3 (Ports-2,3).

Also, Port 3 configuration in the CID file is ignored. The Port 3 ConnectedAP elements has no meaning, as ports 2 and 3 use the port 2 MAC address, IP address, and mask.

R-TxGOOSE1 IP CLASS

Range: 0 to 256 in steps of 1

Default: 46

This setting applies to IEC 61850 Edition 2.

When the **TxGOOSE1 MODE** setting is other than R-GOOSE, the value of this setting is not used. Otherwise this setting selects the IPv4 Differentiated Services Code Point-DSCP (formerly called TypeOfService-TOS) value. This value provides priority routing, when supported in the routers. The default value is for Expedited Forwarding (101110B, 46 or 2EH).

R-TxGOOSE1 DST IP

Range: 0.0.0.0 to 255.255.255 in steps of 1

Default: 224.0.0.0

When the **TxGOOSE1 MODE** setting is other than R-GOOSE, the value of this setting is not used. Otherwise this setting specifies destination IP address for the R-TXGOOSE1 that is entered in Standard IPV4 address format. The destination IP address needs to be a valid multicast or unicast IP address. The value specified in this setting is mapped to IPv4 header 32 bit field for Destination IP Address while publishing R-GOOSE1.

The default IP address 224.0.0.0 is reserved, and hence not a valid multicast IP address.

The source IP address is that of the UR port from which the R-GOOSE messages are transmitted.

R-TxGOOSE1 SECURITY

Range: None, Signature, Signature and Encryption

Default: None

This setting applies to IEC 61850 Edition 2.

This setting specifies level of security (authentication/encryption) used for TxGOOSE1. None specifies no security mechanisms are to be used. Signature specifies only signature (no encryption) is to be used. SignatureAndEncryption specifies that both signature and encryption are to be used.

RxGOOSE

Navigate to **Settings > Product Setup > Communications > IEC 61850 > GOOSE > RxGOOSE > RxGOOSE Messages**.

GOOSE is an efficient method for simultaneous high-speed delivery of generic substation event information by a publishing device to more than one subscribing device. An RxGOOSE is a UR element implementing a single IEC 61850 GOOSE message subscribing service. The publishing function in URs is performed by TxGOOSE elements, as described in the previous section.

Each UR with an IEC 61850 order code option has 64 RxGOOSE elements. Each RxGOOSE element can subscribe to GOOSE messages from a specified publisher. Each RxGOOSE can either use the original format specified in IEC 61850 8 1:2011 or the routable GOOSE (R-GOOSE) format specified in IEC TR 61850-90-5:2012. Subscribed message members can be DataObjects, SubDataObjects, DataAttributes, or SubAttributes. In E2-2.0 mode, members are restricted to basic types BOOLEAN, FLOAT32, INT32, Dbpos, TimeStamp, or Quality. Each subscribed message can contain up to 64 values. A member can be a structure containing several values; note that it is the number of values rather than the number of members that are limited to 64.

GOOSE messages from any device of any manufacturer that implements the IEC 61850 edition 1.0 or 2.0 GOOSE publish service or the 61850-90-5 R GOOSE service can be subscribed to. The UR accepts both the variable-length encoded GOOSE messages specified in IEC 61850 8 1:2004 and the fixed-length encoded GOOSE messages as specified in IEC 61850 8 1:2011 clause A.3.

Each enabled RxGOOSE monitors for interruption of the GOOSE messages it subscribes to based on the value in the timeAllowedtoLive field of the last message received. If a new message is not received within that time interval, the RxGOOSE assumes that connectivity is lost. FlexLogic operands (for example RxGOOSE1 On, RxGOOSE1 Off) reflect the status of each RxGOOSE connectivity. An RxGOOSE connection is also considered lost after the UR finishes restart until a message is received. While any RxGOOSE connectivity is lost, a common RxGOOSE Fail self-test is activated.

Messages that contain the value true in the ndsCom field are never accepted. Messages that contain the value true in the simulation field (test field in Edition 1.0 messages) are accepted only when the UR **Test Mode Function** setting is set to Test or Test-Blocked.

RxGOOSE messages can be received through any UR Ethernet port.

Navigate to **Settings > Product Setup > Communications > IEC 61850 > GOOSE > RxGOOSE > RxGOOSE Messages > RxGOOSE1** to access the settings that specify the messages to be accepted by the first RxGOOSE element. The settings and functionality for the other RxGOOSE are similar. The following settings are available. They allow RxGOOSE1 to recognize the GOOSE messages to accept. Most of these settings are configured automatically by the EnerVista UR Setup software when an association to an RxGOOSE Boolean Input, RxGOOSE DPS Input, and/or RxGOOSE Analog Input is made as described in the following sections. Only settings **R-RxGOOSE1 RECEPTION MODE**, **R-RxGOOSE1 SECURITY**, and **R-RxGOOSE SRC IP** need to be completed manually as the information is not contained in publisher SCL.

Figure 5-28: IEC 61850 RxGOOSE Messages panel

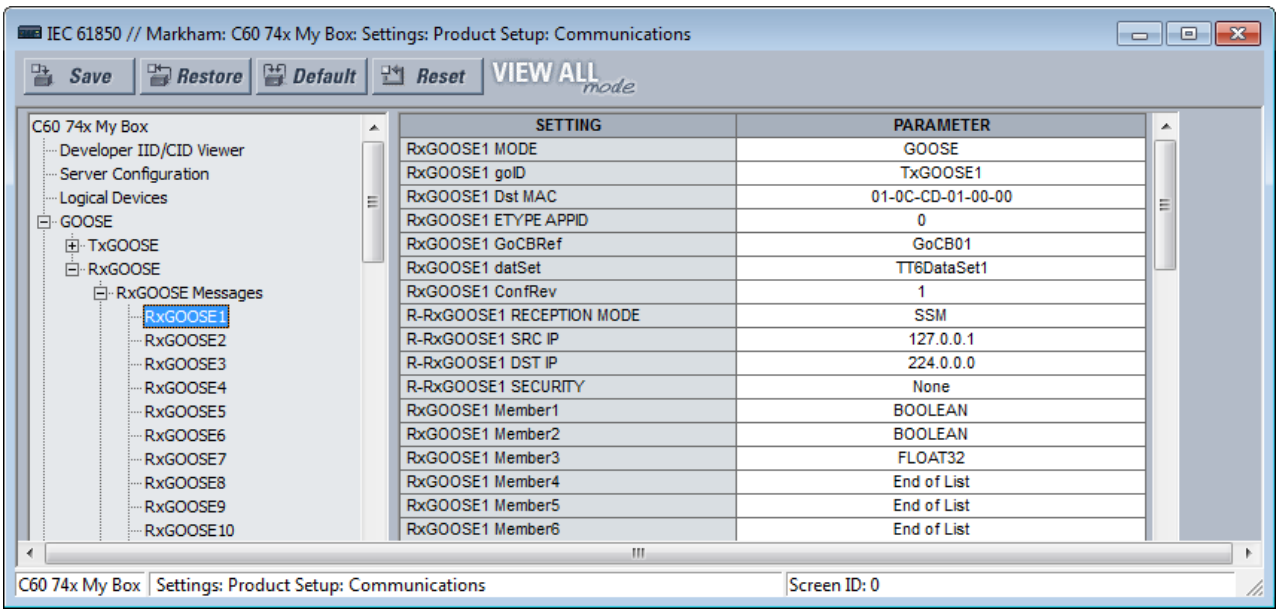

SETTING	PARAMETER
RxGOOSE1 MODE	GOOSE
RxGOOSE1 goID	TxGOOSE1
RxGOOSE1 Dst MAC	01-0C-CD-01-00-00
RxGOOSE1 ETYPE APPID	0
RxGOOSE1 GoCBRef	GoCB01
RxGOOSE1 datSet	TT6DataSet1
RxGOOSE1 ConfRev	1
R-RxGOOSE1 RECEPTION MODE	SSM
R-RxGOOSE1 SRC IP	127.0.0.1
R-RxGOOSE1 DST IP	224.0.0.0
R-RxGOOSE1 SECURITY	None
RxGOOSE1 Member1	BOOLEAN
RxGOOSE1 Member2	BOOLEAN
RxGOOSE1 Member3	FLOAT32
RxGOOSE1 Member4	End of List
RxGOOSE1 Member5	End of List
RxGOOSE1 Member6	End of List

RxGOOSE1 MODE

Range for Edition 2: GOOSE, R-GOOSE

Range for Edition 1: GOOSE

Default: GOOSE

When set to GOOSE, TxGOOSE1 messages are published in IEC 61850 8 1:2011 GOOSE format. When set to R-GOOSE, TxGOOSE1 messages are published in Routable GOOSE format according to IEC 61850 90-5. When set to R-GOOSE, the **R-RxGOOSE DST IP** needs to be a valid multicast or unicast IP address.

RxGOOSE1 goID

Range for Edition 2: 0 to 129 Visible String characters
Range for Edition 1: up to 65 Visible String characters
Default: empty string

If the entered value has one or more characters, the goID field of incoming GOOSE messages must exactly match this value for the message to be accepted as a valid RxGOOSE1 message. If the entered value is the empty string, RxGOOSE1 does not check the value received in the goID field.

If the publisher is a UR 7.3x series device, this setting needs match the value of the publisher's **TxGOOSE GoID** setting.

RxGOOSE1 Dst MAC

Range: any 12 digit hexadecimal number
Default: 01-0C-CD-01-00-00

When the **RxGOOSE1 MODE** setting is R-GOOSE, the value of this setting is not used, the destination Media Access Control (MAC) address for RxGOOSE1 messages is calculated based on the **RxGOOSE DST IP** address. Otherwise, set this setting to the MAC address of the publisher. Only received GOOSE messages having a MAC address equal to this value are accepted as valid RxGOOSE1 messages. An entered address of zero disables RxGOOSE1.

If the publisher is a UR series 7.3x device, the setting needs to match the value of the publisher's **TxGOOSE DST MAC** setting.

RxGOOSE1 ETYPE APPID

Range: 0 to 65535 in steps of 1
Default: 0

If the value entered is non-zero, the APPID field of incoming GOOSE messages must exactly match this value for the message to be accepted as a valid RxGOOSE1 message. If the value entered is zero, RxGOOSE1 does not check the value received in the APPID field.

If the publisher is a UR series 7.3x device, the setting needs to match the value of the publisher's **TxGOOSE ETYPE APPID** setting.

RxGOOSE1 GoCBRef

Range for Edition 2: 0 to 129 alphanumeric, underscore, slash and period characters, beginning with an alpha character
Range for Edition 1: 0 to 65 alphanumeric, underscore, slash and period characters, beginning with an alpha character
Default: empty string

The gocbRef field of incoming GOOSE messages must match this value for the message to be accepted as a valid RxGOOSE1 message. If the entered value is the empty string, RxGOOSE1 is disabled. If not the empty string, the entry needs to be an ACSI ObjectReference to the publishing control block in the format:

<LDName>/LLN0.<GoCBName>

where <LDName> is the function-related name if the logical device containing the publishing control block has "ldName" configured, otherwise the product-related name of that logical device, and <GoCBName> is the name of the publishing control block.

The L90 translates the ACSI format required for this setting to the MMS format used in GOOSE messages:

<LDName>/LLN0GO<GoCBName>

If the publisher is a UR 7.3x or 7.40 series device, <LDName> is the value of the publisher's Master functional ldName setting if that setting is not empty, otherwise it is the value of the publisher's IED NAME suffixed with "Master". If the publisher is a UR 7.3x series device, <GoCBName> is "GoCB" suffixed with the two digit TxGOOSE instance number, for example "GoCB01". If the publisher is a UR 7.40 series device, <GoCBName> is as specified earlier in the TxGOOSE section of this chapter.

RxGOOSE1 datSet

Range: 0 to 32 alphanumeric and underscore characters, beginning with an alpha character
Default: empty string

If the entered value has one or more characters, the datSet field of incoming GOOSE messages must exactly match this value prefixed by <LDName>/LLN0$ for the message to be accepted as a valid RxGOOSE1 message. <LDName> is as specified in the RxGOOSE GoCBRef setting above. If the entered value is the empty string, RxGOOSE1 does not check the value received in the datSet field.

If the publisher is a UR 7.3x series device, set this setting to the value of the publisher's DataSetxx name setting, where xx is the instance number of the data set selected by the publisher's **TxGOOSE datSet** setting. If the publisher is a UR 7.40 series device, datSet is as specified in the DataSets section of this chapter.

RxGOOSE1 ConfRev

Range: 0 to 4294967295 in steps of 1
Default: 1

If the value entered is non-zero, the confRev field of incoming GOOSE messages must exactly match this value for the message to be accepted as a valid RxGOOSE1 message. If the entered value is zero, RxGOOSE1 does not check the value received in the confRev field.

If the publisher is a UR 7.3x series device, set this setting to match the value of the publisher's **TxGOOSE ConfRev** setting.

R-RxGOOSE1 RECEPTION MODE

Range: SSM, ASM, Unicast
Default: SSM

This setting applies to IEC 61850 Edition 2.

When the **RxGOOSE1 MODE** setting is other than R-GOOSE the value of this setting is not used. Otherwise it selects the R-GOOSE reception mode.

R-RxGOOSE RECEPTION MODE specifies the **R-RxGOOSE DST IP** range. When set to SSM, **R-RxGOOSE DST IP** must be in the range of 232.0.0.1 to 232.255.255.255. When set to ASM, **R-RxGOOSE DST IP** must be in the range of 224.0.0.1 to 239.255.255.255, excluding the SSM range. Note that the SSM range is inside the ASM range and therefore the ASM use excludes the SSM range. The default destination IP address 224.0.0.0 is reserved, and hence not a valid multicast IP address.

The reception modes are related to Layer-3 R-GOOSE reception from routers/WAN. The subscription to multicasting of R-GOOSE is supported using IGMP Protocol Independent Multicast (PIM). It is made available in either Source Specific Multicast (SSM) mode or Any Source Multicast (ASM) mode. Unicast (over UDP) mode can also be used. In case of multicasting (IGMPv3 based SSM or ASM), the R-GOOSE subscriber device requests the Last Hop Router (LHR) to subscribe to a specific multicasting group.

If the publisher is using a unicast destination IP address for this R-GOOSE, then set **R-RxGOOSE1 RECEPTION MODE** to Unicast. Otherwise set **R-RxGOOSE1 RECEPTION MODE** to the SSM or ASM mode used by the local routers/firewalls.

R-RxGOOSE1 SRC IP

Range: 0.0.0.0 to 255.255.255 in steps of 1
Default: 127.0.0.1

This setting applies to IEC 61850 Edition 2.

When the **RxGOOSE1 MODE** setting is other than R-GOOSE, the value of this setting is not used. When the **RxGOOSE1 MODE** setting is R-GOOSE and the **R-RxGOOSE RECEPTION MODE** setting is ASM, the value of this setting is not used. Otherwise the Source IP Address field of incoming R-GOOSE messages must exactly match this value for the message to be accepted as a valid RxGOOSE1 message. Set this setting to the value of the source IP address used by the publisher. For UR publishers, this value is in setting PRT# IP ADDRESS.

The UR does not validate the address entered. The default IP address 127.0.0.1 is a reserved, not a valid IP address. Enter a valid IP source address.

R-RxGOOSE1 DST IP

Range: 0.0.0.0 to 255.255.255 in steps of 1
Default: 224.0.0.0

This setting applies to IEC 61850 Edition 2.

When the **RxGOOSE1 MODE** setting is other than R-GOOSE, the value of this setting is not used. Otherwise the Destination IP Address field of incoming R GOOSE messages must exactly match this value for the message to be accepted as a valid RxGOOSE1 message. Set this setting to the same value as the R-GOOSE publisher's Destination IP Address. For UR publishers, this value is in setting R-TxGOOSE# DST IP.

The destination IP address needs to be a valid multicast or unicast IP address. The UR does not validate the address entered. The default IP address 224.0.0.0 is reserved, and hence not a valid multicast IP address.

R-RxGOOSE1 SECURITY

Range: None, Signature, Signature and Encryption

Default: None

This setting applies to IEC 61850 Edition 2.

This setting specifies the level of security (authentication/encryption) used for RxGOOSE1. None indicates no security mechanisms are in use. Signature indicates only signature (no encryption) is in use. SignatureAndEncryption indicates that both signature and encryption are in use. Normally this setting is set to match the GOOSE publisher's security method.

RxGOOSE1 Member 1

Range: End of List, BOOLEAN, FLOAT32, INT32, Dbpos (DPS), Quality, TimeStamp

Default: End of List

This setting specifies the type that the first member of incoming GOOSE messages must be for the message to be accepted as a valid RxGOOSE1 message. There are similar settings for each of the up to 64 members that the UR is able to subscribe to in a given GOOSE message. The member before the first member setting set to "End of List" must be the last member of the message for the message to be accepted as a valid RxGOOSE1 message.

If the publisher is a UR 7.3x or 7.40 series device, set these settings to match the basic type of the members of the publisher's data set selected by the publisher's **TxGOOSE datSet** setting.

If the publisher dataset includes members with structured data, that is, data attributes, sub-data objects, and/or data attributes with sub-data attributes, configuration must use one of the new 7.40 UR Setup RxGOOSE Inputs pages. In this case the Member setting displays as the product-related name used by the publishing IED of the data object or data attribute, in standard SCSM format (e.g. Publisher1LD1/LLN0STOff$stVal).

Note that a dataset can hold at most 64 basic data attribute values, and that a single structured data object or attribute can contain multiple basic data attribute values. UR Setup software does not allow more that 64 basic data attribute values to be entered, in which case the last several members settings cannot be changed from End of List.

Note that the publisher's name alone does not contain all the information required for subscription, additional publisher information model information is stored elsewhere. For this reason, manual entry of the name is not supported.

RxGOOSE inputs

The values received by RxGOOSE elements need to be converted to FlexLogic or FlexAnalog operands so that they can be used by other UR elements. This conversion is done by RxGOOSE Boolean, RxGOOSE DPS, and RxGOOSE Analog elements. Each RxGOOSE Boolean can convert the value of a specified Boolean value received by a specified RxGOOSE to a FlexLogic operand. Each RxGOOSE DPS can convert the value of a specified Dbpos (Double bit position) value to four FlexLogic operands, one for each of the four possible Dbpos states. Each RxGOOSE Analog can convert the value of a specified FLOAT32 member to a FlexAnalog operand. Each of these operands reverts to its default state when the RxGOOSE connectivity is lost. Other types of values can be present in subscribed GOOSE messages, but cannot be converted to operands. An RxGOOSE Input that is mapped to a value that in the GOOSE message is a child of a data object reverts to its configured default value while the Quality value in that data object is invalid, and also while the Quality value is test and this relay's **TEST MODE FUNCTION** setting is other than Test or Test-Blocked.

RxGOOSE Boolean, RxGOOSE DPS, and RxGOOSE Analog elements are mapped to various data objects in <iedName>Master/GGIO3. This is to allow reading of their values via MMS and to allow references to them in SCL files. GGIO3 has no settings, nor is it visible in the UR Setup software. See the UR Family Communications Guide for more information on GGIO3.

RxGOOSE Boolean inputs

Navigate to **Settings > Product Setup > Communications > IEC 61850 > GOOSE > RxGOOSE > RxGOOSE Boolean Inputs**.

The number of RxGOOSE Boolean (remote inputs) is 256.

There are **Add IED** and **Remove IED** buttons. The **Add IED** button allows SCL files to be used, including ICD, CID, and SCD (supported in version 7.40 and later). When the file format is SCD, the system lists all IEDs inside the SCD file and lets the user select the ones to add. The figure shows a selection being made by importing a CID file using the **Add IED** function.

Figure 5-29: RxGOOSE Boolean panel

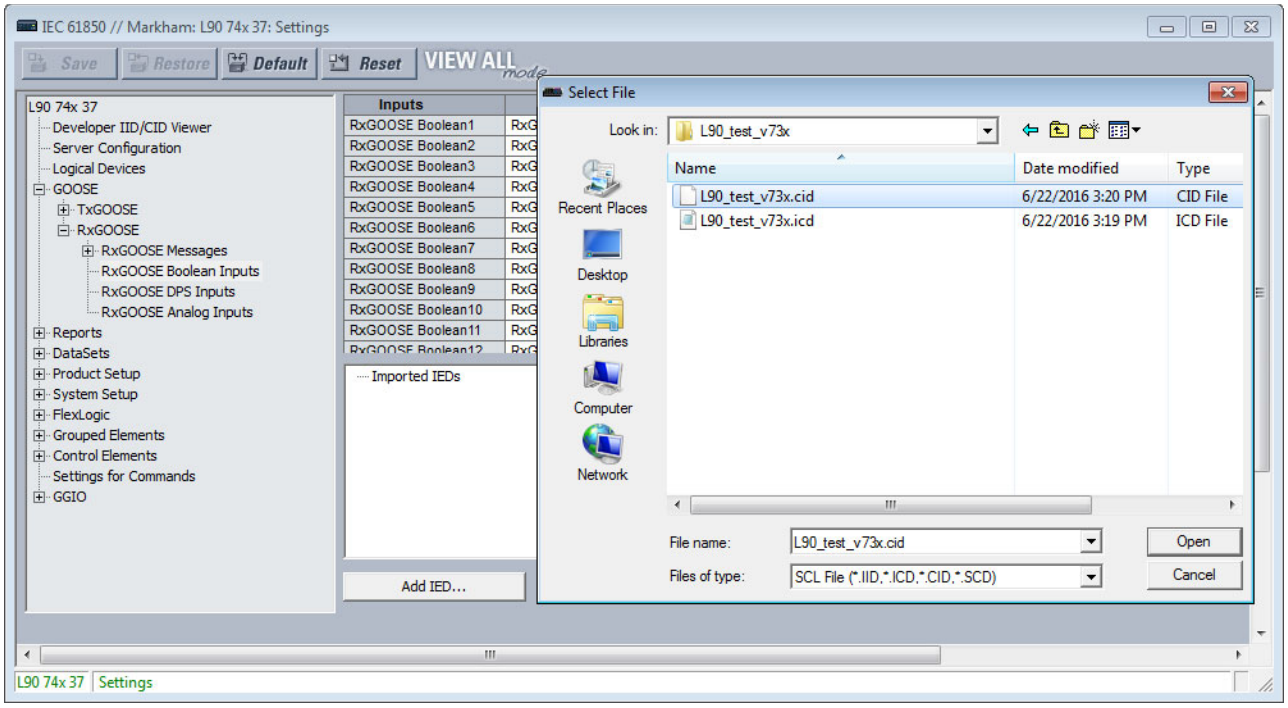

5

Most of the settings are configured by drag-and-drop. However the ID, DEFAULT STATE, and EVENTS settings must be individually entered when the factory default values are not acceptable.

RxGOOSE Boolean1 ID

Range: 0 to 20 characters

Default: RxG Bool1

This setting allows the user to assign descriptive text to the name of the RxGOOSE Boolean1 FlexLogic operand. The full operand name is the value of this setting appended with " On". The basic and enhanced front panels display the first 17 characters of this setting plus " On" to fit the 20 character display.

RxGOOSE Boolean1 RxGOOSE

Range: None, RxGOOSE1, RxGOOSE2, and so on

Default: None

This setting selects the RxGOOSE containing the value that drives the RxGOOSE Boolean1 FlexLogic operand. If set to None, the RxGOOSE Boolean1 FlexLogic operand assumes its default state.

RxGOOSE Boolean1 Member

Range: 1 to 64 in steps of 1

Default: 1

This setting selects the GOOSE message member that drives the RxGOOSE Boolean1 FlexLogic operand. A setting of 1 selects the first member, 2 selects the second member, and so on. Entering a number greater than the number of members in the message and entering the number of a member which does not contain a BOOLEAN results in the RxGOOSE Boolean1 FlexLogic operand assuming its default state. The Subscribed to column identifies the particular Boolean subscribed to even if the member is a structure containing more than one Boolean.

RxGOOSE Boolean1 DEFAULT STATE

Range: On, Off, Latest/On, Latest/Off

Default: Off

This setting selects the logic state for the RxGOOSE Boolean1 FlexLogic operand if the UR has just completed startup and the selected RxGOOSE has not yet received a message, or the selected RxGOOSE has lost its connectivity with the publisher. The following choices are available:

- "On" value defaults the input to logic 1
- "Off" value defaults the input to logic 0
- "Latest/On" freezes the input in case of lost connectivity. If the latest state is unknown, such as after UR power-up but before the first communication, the input defaults to logic 1. When communication resumes, the input becomes fully operational.
- "Latest/Off" freezes the input in case of lost connectivity. If the latest state is unknown, such as after UR power-up but before the first communication, the input defaults to logic 0. When communication resumes, the input becomes fully operational.

RxGOOSE Boolean1 EVENTS

Range: Disabled, Enabled

Default: Disabled

This setting selects whether Off to On transitions of the RxGOOSE Boolean1 FlexLogic operand are recorded by the event recorder. If set to Enabled, Off to On transitions are recorded. On to Off transitions are never recorded, even if events are enabled.

RxGOOSE DPS inputs

Navigate to **Settings > Product Setup > Communications > IEC 618560 > GOOSE > RxGOOSE > RxGOOSE DPS Inputs**.

There are **Add IED** and **Remove IED** buttons. The **Add IED** button allows SCL files to be used, including ICD, CID, and SCD (supported in version 7.40 and later). When the file format is SCD, the system lists all IEDs inside the SCD file and lets the user select the ones to add.

Figure 5-30: RxGOOSE DPS Inputs panel

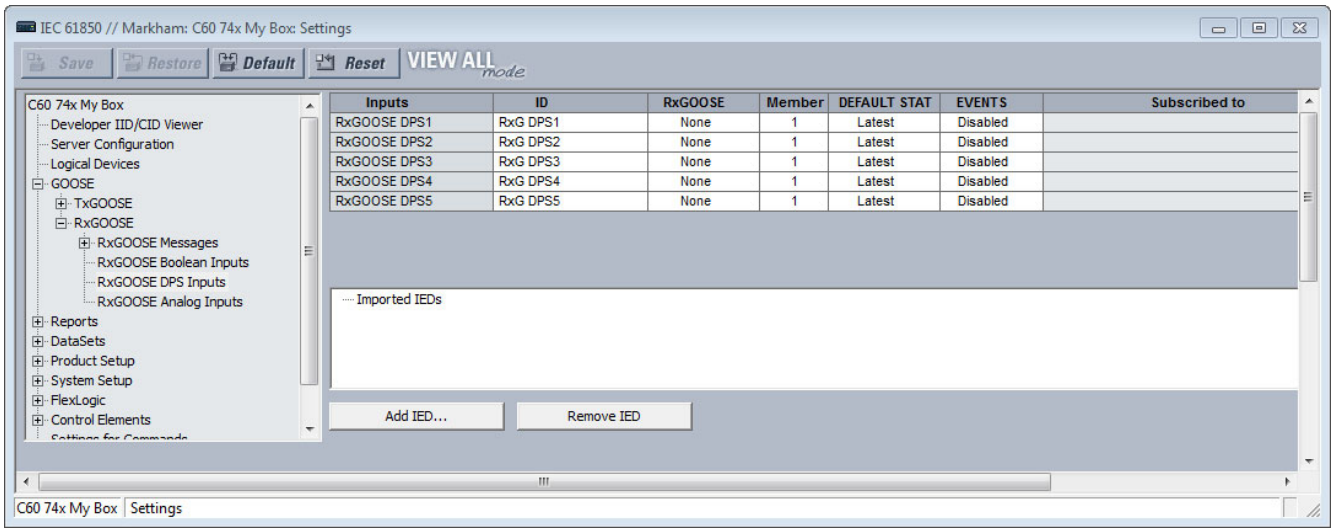

RxGOOSE DPS1 ID

Range: 0 to 20 characters

Default: RxG DPS1

This setting allows the user to assign descriptive text to the names of the four RxGOOSE DPS1 FlexLogic operands. The full operand name is the value of this setting appended with "Interm," "On," "Off," or "Bad." The basic and enhanced front panels display the first 13 characters of this setting plus the state suffix to fit the 20 character display.

RxGOOSE DPS1 RxGOOSE

Range: None, RxGOOSE1, RxGOOSE2, and so on

Default: None

This setting selects the GOOSE message containing the value that drives the RxGOOSE DPS1 FlexLogic operand. If set to None, the RxGOOSE DPS1 FlexLogic operand assumes its default state.

RxGOOSE DPS1 Member

Range: 1 to 64 in steps of 1

Default: 1

This setting selects the GOOSE message member that drives the RxGOOSE DPS1 FlexLogic operand. A setting of 1 selects the first member, 2 selects the second member, and so on. Entering a number greater than the number of members in the message and entering the number of a member that is not a Dbpos results in the RxGOOSE DPS1 FlexLogic operand assuming its default state. In the case that the member is a structure containing more than one Dbpos, the Subscribed to column identifies the particular Dbpos subscribed to.

RxGOOSE DPS1 DEFAULT STATE

Range: Intermediate-state, Off, On, Bad-state, Latest

Default: Latest

This setting selects the logic state for the data attribute @Master/GGIO3.IndPos01.stVal and the DPS FlexLogic operands when the UR has just completed start-up and the selected RxGOOSE has not yet received a message, and when the RxGOOSE has lost its connection with the publisher. When this setting is selected to Latest, the value of @Master/GGIO3.IndPosψψ.stVal is Intermediate-state when the UR has just completed start-up and the selected RxGOOSE has not yet received a message, and the latest received value when the RxGOOSE loses its connectivity with the publisher.

RxGOOSE DPS1 EVENTS

Range: Disabled, Enabled

Default: Disabled

This setting selects whether Off to On transitions of the RxGOOSE DPS1 FlexLogic operands are recorded by the event recorder. If set to Enabled, Off to On transitions are recorded. On to Off transitions are never recorded, even if events are enabled.

5

RxGOOSE analog inputs

Navigate to **Settings > Product Setup > Communications > IEC 61850 > GOOSE > RxGOOSE > RxGOOSE Analog Inputs**.

There are **Add IED** and **Remove IED** buttons. The **Add IED** button allows SCL files to be used, including ICD, CID, and SCD (supported in version 7.40 and later). When the file format is SCD, the system lists all IEDs inside the SCD file and lets the user select the ones to add.

Figure 5-31: RxGOOSE Analog Inputs panel

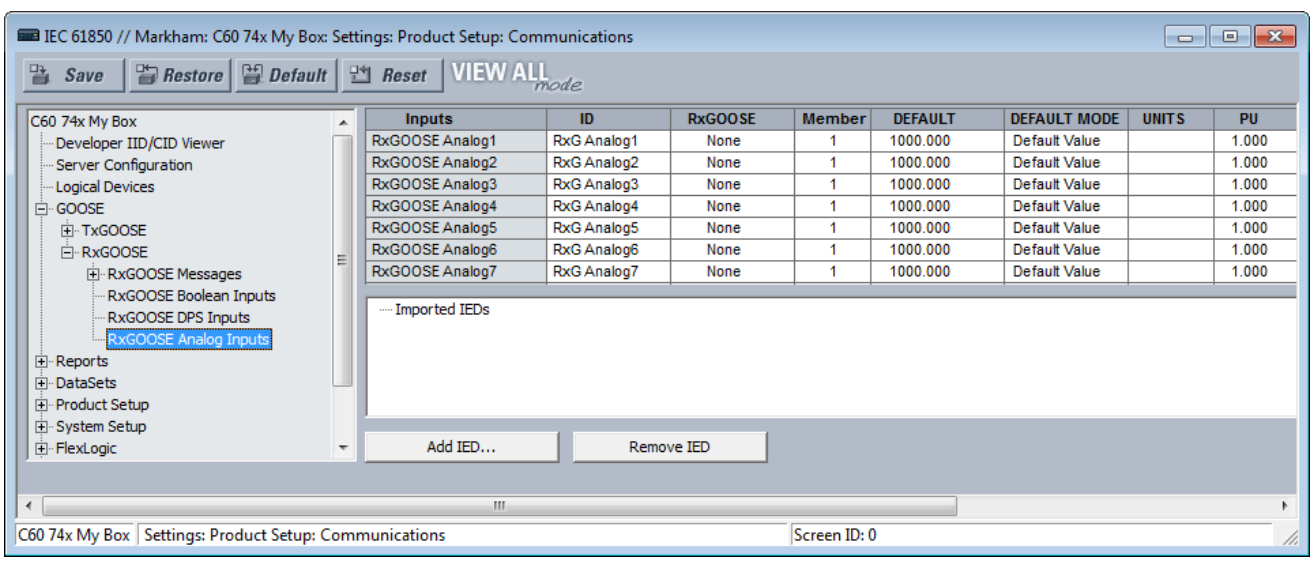

Inputs	ID	RxGOOSE	Member	DEFAULT	DEFAULT MODE	UNITS	PU
RxGOOSE Analog1	RxG Analog1	None	1	1000.000	Default Value		1.000
RxGOOSE Analog2	RxG Analog2	None	1	1000.000	Default Value		1.000
RxGOOSE Analog3	RxG Analog3	None	1	1000.000	Default Value		1.000
RxGOOSE Analog4	RxG Analog4	None	1	1000.000	Default Value		1.000
RxGOOSE Analog5	RxG Analog5	None	1	1000.000	Default Value		1.000
RxGOOSE Analog6	RxG Analog6	None	1	1000.000	Default Value		1.000
RxGOOSE Analog7	RxG Analog7	None	1	1000.000	Default Value		1.000

There are 32 RxGOOSE analog inputs.

RxGOOSE Analog1 ID

Range: 0 to 20 characters

Default: RxG Analog1

This setting allows the user to assign descriptive text to RxGOOSE Analog1. Unlike RxGOOSE Booleans and RxGOOSE DPS, the RxGOOSE Analog operands have fixed names, for example RxGOOSE Analog1.

RxGOOSE Analog1 RxGOOSE

Range: None, RxGOOSE1, RxGOOSE2, and so on

Default: None

This setting selects the GOOSE message that drives the RxGOOSE Analog1 FlexAnalog operand. If set to None, the RxGOOSE Analog1 FlexAnalog operand assumes its default state.

RxGOOSE Analog1 Member

Range: 1 to 64 in steps of 1

Default: 1

This setting selects the GOOSE message member that drives the RxGOOSE Analog1 FlexAnalog operand. A setting of 1 selects the first member, 2 selects the second member, and so on. Entering a number greater than the number of members in the message and entering the number of a member that does not contain a FLOAT32 results in the RxGOOSE Analog1 FlexAnalog operand assuming its default state. The Subscribed to column identifies the particular FLOAT32 subscribed to even if the member is a structure containing more than one FLOAT32.

RxGOOSE Analog1 DEFAULT

Range: -1000000.000 to 1000000.000 in steps of 0.001

Default: 1000.000

This setting specifies the value of the GOOSE analog input when the selected RxGOOSE has lost its connectivity with the publisher and the RxGOOSE Analog1 DEFAULT MODE is set to "Default Value." Otherwise this setting has no effect. This setting is stored as an IEEE 754 / IEC 60559 floating point number. Because of the large range of this setting, not all possible values can be stored. Some values can be rounded to the closest possible floating point number.

RxGOOSE Analog1 DEFAULT MODE

Range: Default Value, Last Known

Default: Default Value

When the selected RxGOOSE has lost its connectivity with the publisher and this setting is "Last Known," the value of the RxGOOSE Analog1 FlexLogic operand remains at the last received value. When the selected RxGOOSE has lost its connectivity with the publisher and this setting value is "Default Value," then the RxGOOSE Analog1 FlexLogic operand is defined by the RxGOOSE Analog1 DEFAULT setting. After restart, until a message is received, the operand value is the default value.

RxGOOSE Analog1 UNITS

Range: up to 4 characters

Default: empty string

This setting specifies a four-character string that is used in the actual values display of RxGOOSE Analog1.

RxGOOSE Analogs are floating-point values, with no units. The RxGOOSE UNIT and PU base settings allow the user to configure RxGOOSE Analog, so that it can be used in a FlexElement.

RxGOOSE Analogs that represent current, voltage, power, frequency, angles, or power factor can be used in a FlexElement. The following text must be used in the UNITS setting, to represent these types of analogs: A, V, W, var, VA, Hz, deg, and no text (blank setting) for power factor.

RxGOOSE Analogs can be compared to other RxGOOSE Analogs with any character string or no string.

RxGOOSE Analog1 PU Base in kilo

Range: 0.000 to 1000000000.000 in steps of 0.001

Default: 1.000

This setting specifies the per-unit base value for other L90 features to use with the RxGOOSE Analog1 operand. A FlexElement for instance subtracts two quantities after converting their values to integers rescaled to a common base, the common base being the largest of the base values of the two quantities. If one of quantities is RxGOOSE Analog1 and its per-unit base value is not appropriate, the rescaling operation can result in unnecessary loss of precision or overflow

in the integer result. The FlexElement Base Units table in the Settings > FlexLogic > FlexElements section later, which tabulates the per-unit base value used by its pickup setting and implies the per-unit base used by other FlexAnalogs, can be of use in selecting a value for the **RxGOOSE Analog1 PU** setting.

Some UR elements have requirements for the type of input operands, for instance current type or voltage type. These elements assume that RxGOOSE Analog operands are of whatever type is necessary to meet these requirements.

The per-unit base setting represents thousands, not single units. For example, a PU base of 1.000 is actually 1000 and a PU base of 0.001 is 1.

When using RxGOOSE Analogs and PU base in FlexElements, the largest value that can be displayed in the FlexElement actual values is 2,140,000.000.

Reports

Navigate to **Settings > Product Setup > Communications > IEC 61850 > Reports**.

Report settings

Navigate to **Settings > Product Setup > Communications > IEC 61850 > Reports > Report Settings**.

ReportSettings rptID

Range: Dyn, Conf
Default: Dyn

When set to Dyn, the RptID attribute in any buffered and unbuffered report control block can be modified by an MMS client while the control block's RptEna attribute is false. The RptID is the name of the report.

ReportSettings optFields

Range: Dyn, Conf
Default: Dyn

When set to Dyn, the OptFlds attribute in any buffered and unbuffered report control block can be modified by an MMS client while the control block's RptEna attribute is false.

ReportSettings bufTime

Range: Dyn, Conf
Default: Dyn

When set to Dyn, the BufTm attribute in any buffered and unbuffered report control block can be modified by an MMS client while the control block's RptEna attribute is false.

ReportSettings trgOps

Range: Dyn, Conf
Default: Dyn

When set to Dyn, the TrgOps attribute in any buffered and unbuffered report control block can be modified by an MMS client while the control block's RptEna attribute is false.

ReportSettings intgPd

Range: Dyn, Conf
Default: Dyn

When set to Dyn, the IntgPd attribute in any buffered and unbuffered report control block can be modified by an MMS client while the control block's RptEna attribute is false.

Buffered and unbuffered reports

Navigate to **Settings > Product Setup > Communications > IEC 61850 > Reports > Buffered Reports** or **Unbuffered Reports**.

Figure 5-32: IEC 61850 buffered report panel

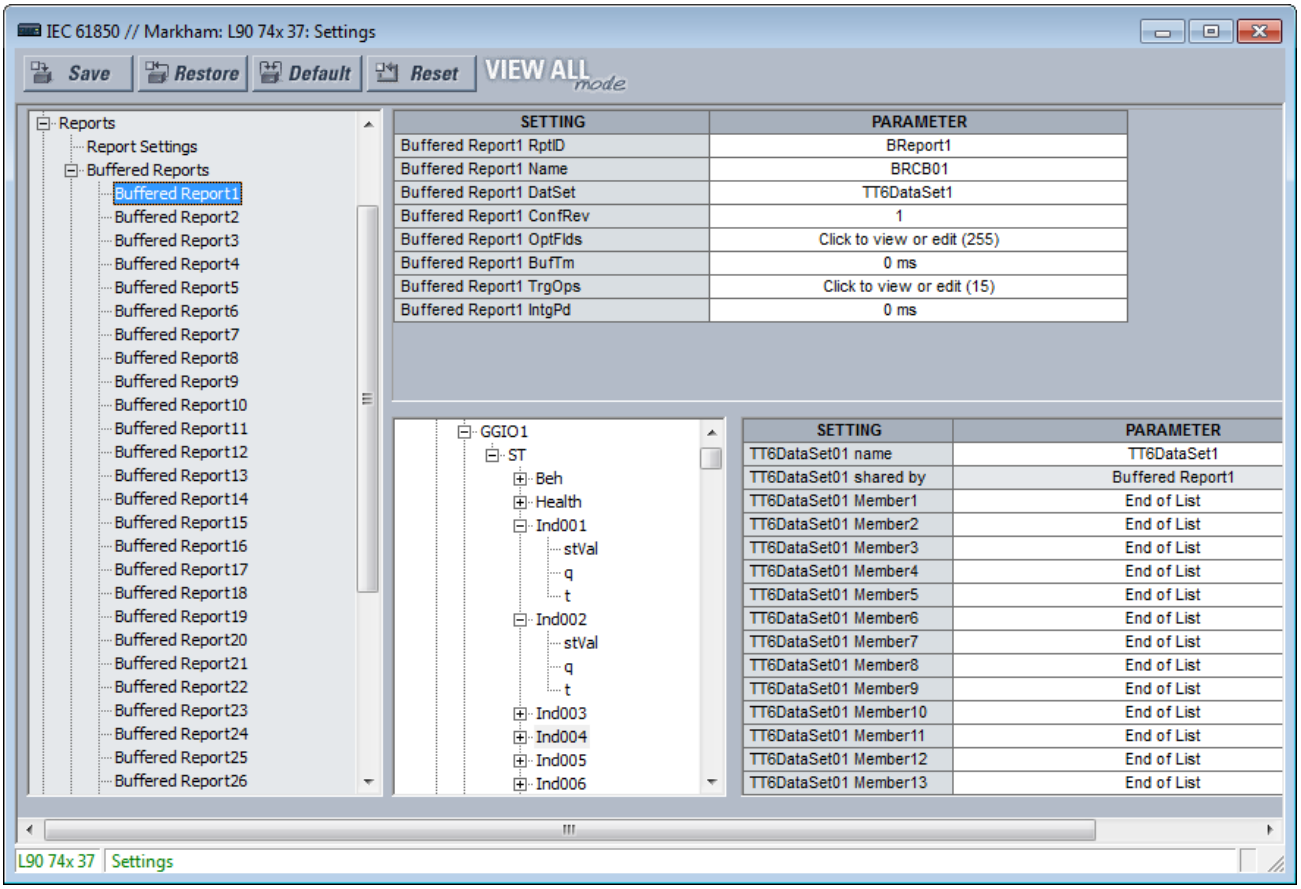

An IEC 61850 Report server is an efficient method to deliver generic substation event information from a single server to a single client, such as a supervisory control IED. A Configurable Report is a UR element implementing an IEC 61850 Report server, either of the buffered or unbuffered kind. The following table lists the number of Configurable Report elements. Each Configurable Report element can report the values of up to 64 FlexLogic or FlexAnalog operands. Buffered report elements queue value changes that occur while the client is offline and delivered when the client re-connects. Up to 512 events can be queued. Unbuffered control blocks purge all value change events when the connection to the client is lost; any events that occur while the client is not connected are lost.

Table 5-11: Number of report elements

	Number
Buffered reports	30
Unbuffered reports	18

Configurable Reports interoperate with any client device of any manufacturer that conforms to the IEC 61850 edition 1.0 or 2.0 report client requirements.

The entities whose values are reported by a Configurable Report are known as members. The members are itemized in an ordered list known as a data set. Each Configurable Report can use any one of the data sets provided.

Each enabled Configurable Report transmits an update to its client whenever a value change is detected in one or more of its members. Also, the control block can be configured to send integrity reports containing the present value of all members either on demand from the client or periodically. A TCP handshaking mechanism causes messages that are not read and acknowledged by the client to be retransmitted.

For a Configurable Report to operate, its members must be selected (that is, its data set configured) and a client must open a connection to, configure, and enable its report control block. Control blocks and data sets can be pre-configured by sending the L90 a CID file. See the UR Family Communications Guide for details. EnerVista UR Setup also can be used to select the data set members and to pre-configure the control blocks.

Each buffered report has the following settings.

Buffered Report1 RptID

Range: 0 to 129 VisibleString characters

Default: empty string

The name of the report. The entered value sets the RptID value in Buffered Report1 messages, and it can be used by the client to discriminate Buffered Report1 messages from other messages. If the number of characters entered is zero, the value used for RptID in messages is an ObjectReference to the report's control block, that is, "<LDName>/LLN0BR"BRCB01".

Buffered Report1 Name

Range: 0 to 32 VisibleString characters

Default: BRCB01

The entered value sets the report control block name value for Buffered Report1.

Buffered Report1 DatSet

Range: None, TT6DataSet1, TT6 DataSet2, ..., TT3DataSet01, TT3DataSet02, ...

Default: None

This setting selects the data set whose members' status is reported in Buffered Report1 messages using the UR Setup software designator for the data set. The IEC 61850 name of the data sets are configured in the Datasets panel, as described later.

An ObjectReference to the data set, which consists of the concatenation of the string "<LDName>/LLN0$" and the data set name, is used in the datSet field of report messages, and it can be used by the client to discriminate Buffered Report1 messages from other messages.

The performance of the report is determined by the performance of the selected dataset. When the selection is TT3DataSet01, TT3DataSet02, ... it is possible that transient events can be missed.

To configure a DataSet, select it at the top of the window from the drop-down list, for example DataSet02 shown in the previous figure. In the lower part of the window, drag and drop configuration items to the right side. For example select the **ST Ind001 stVal** item and drag it to DataSet Member 1. Dataset members configured here affect other Report or TxGOOSE control blocks that use the same DataSet.

Buffered Report1 ConfRev

Range: 0 to 4294967295 in steps of 1

Default: 1

The entered value sets the confRev value in Buffered Report1 messages, and it can be used by clients to discriminate report messages of the expected configuration revision from messages of a different revision. The standard requires that confRev be incremented each time the members or the order of the members is changed, and each time the data set name is changed. The standard states that the value of 0 is reserved.

Buffered Report1 OptFlds

Range: The check box for each individual bit can be enabled or not (see figure)

Default: All bits enabled/ true

The OptFlds setting is bitstring that controls which of the optional fields are included in report messages. The figure shows the available option bits. To reduce message size, uncheck any fields that are not needed.

Figure 5-33: Options for buffered report messages

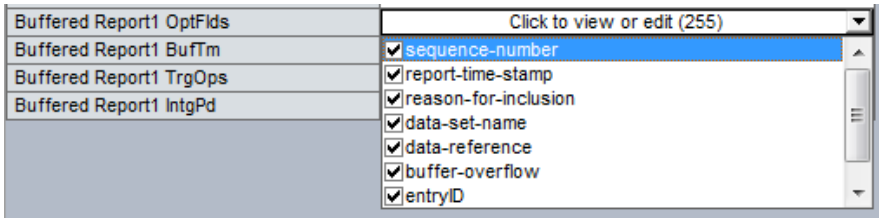

Buffered Report1 BufTm

Range: 0 to 4294967295 in steps of 1

Default: 0 ms

The entered value sets the time interval in milliseconds for the buffering of events for inclusion in a single report.

Buffered Report1 TrgOps

Range: The check box for an individual bit can be enabled or not

Default: All bits enabled / true

The TrgOps setting is bitstring that controls which trigger conditions are monitored in this report. The options are as follows. Uncheck any trigger conditions that are not needed.

- data-change
- quality-change
- integrity
- general interrogation

Buffered Report1 IntgPd

Range: 0 to 4294967295 in steps of 1

Default: 0 ms

The entered value sets the period in milliseconds for generating Buffered Report1 integrity reports. An integrity report includes the values of all members of the referenced data set, whether a change has occurred or not.

Each unbuffered report has the following settings.

Unbuffered Report1 RptID

Range: 0 to 129 VisibleString characters

Default: empty string

The name of the report. The entered value sets the RptID value in Unbuffered Report1 messages, and it can be used by the client to discriminate Unbuffered Report1 messages from other messages. If the number of characters entered is zero, the value used for RptID in messages is an ObjectReference to the report's control block, that is, "<LDName>/LLN0RP"URCB01".

Unbuffered Report1 Name

Range: 0 up to 32 VisibleString characters

Default: URCB01

The entered value sets the report control block name value for Unbuffered Report1.

Unbuffered Report1 DatSet

Range: None, TT6DataSet1, TT6 DataSet2, ..., TT3DataSet01, TT3DataSet02, ...

Default: None

This setting selects the data set whose members' status is reported in Unbuffered Report1 messages using the UR Setup software designator for the data set. The IEC 61850 name of the data sets are configured in the Datasets panel, as described later.

An ObjectReference to the data set, which consists of the concatenation of the string "<LDName>/LLN0$" and the data set name, is used in the datSet field of report messages, and it can be used by the client to discriminate Unbuffered Report1 messages from other messages.

The performance of the report is determined by the performance of the selected dataset. When the selection is TT3DataSet01, TT3DataSet02, ... it is possible that transient events can be missed.

Unbuffered Report1 ConfRev

Range: 0 to 4294967295 in steps of 1
Default: 1

The entered value sets the confRev value in Unbuffered Report1 messages, and it can be used by clients to discriminate report messages of the expected configuration revision from messages of a different revision. The standard requires that confRev be incremented each time the members or the order of the members is changed, and each time the data set name is changed. The standard states that the value of 0 is reserved.

Unbuffered Report1 OptFlds

Range: The check box for an individual bit can be enabled or not
Default: All bits enabled / true

The OptFlds setting is bitstring that controls which of the optional fields are included in report messages. The options are as follows. To reduce message size, uncheck any fields that are not needed.

- sequence-number
- report-time-stamp
- reason-for-inclusion
- data-set-name
- data-reference
- conf-revision

The OptFlds bits buffer-overflow and entryID also listed are not applicable to unbuffered reports even though the bits exist in the protocol. They are unchecked by default.

Unbuffered Report1 BufTm

Range: 0 to 4294967295 in steps of 1
Default: 0 ms

The entered value sets the time interval in milliseconds for the buffering of events for inclusion into a single report.

Unbuffered Report1 TrgOps

Range: The check box for an individual bit can be enabled or not
Default: All bits enabled / true

The TrgOps setting is bitstring that controls which trigger conditions are monitored in this report. The options are as follows. Uncheck any trigger conditions that are not needed.

- data-change
- quality-change
- integrity
- general interrogation

Unbuffered Report1 IntgPd

Range: 0 to 4294967295 in steps of 1
Default: 0 ms

The entered value sets the period in milliseconds for generating Unbuffered Report1 integrity reports. An integrity report includes the values of all members of the referenced data set, whether a change has occurred or not.

DataSets

Navigate to **Settings > Product Setup > Communications > IEC 61850 > DataSets**.

As mentioned in the preceding GOOSE and Reports sections, the members whose values are communicated by these services are itemized in an ordered list known as a data set. Each UR with the IEC 61850 option has 18 data sets (six fast and 12 slow). Each data set can contain as many as 64 members. Any data set can be used simultaneously by any number of TxGOOSE elements and/or by any number of Configurable Report elements. UR Setup software can configure any FlexLogic operands and any FlexAnalog operands as members.

Figure 5-34: IEC 61850 DataSets

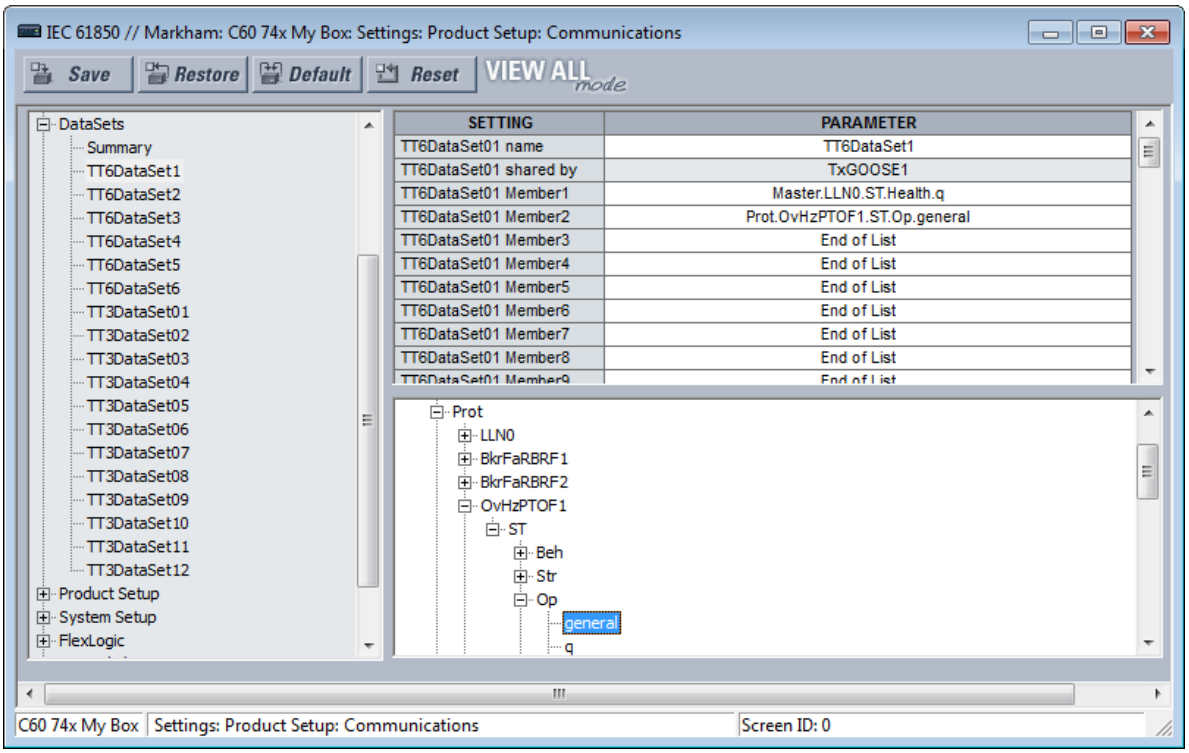

UR Setup software requires data set members to be IEC 61850 data objects or data attributes with Functional Constraint ST or MX. Certain FlexLogic and FlexAnalog operands have factory-assigned data attributes as tabulated in the UR Family Communications Guide. All FlexLogic and FlexAnalog operands can be user-assigned to GGIO1 or GGIO4 data attributes, so that operands without factory-assigned data attributes can still have their values published. See the GGIO1 and GGIO4 sections later for details.

Datasets used by TxGOOSE1, TxGOOSE2, and/or by reports also provide a chatter suppression service for their Boolean members. Oscillation in a value, also known as chatter, can be caused by errors in logic programming, inadequate hysteresis (deadband) on a threshold, or a failed station component. Chatter can flood a communications network with GOOSE messages, degrading response time for all users. If chatter is detected in a Boolean member, TxGOOSE suspends GOOSE event message triggering and report message triggering from that member for as long as the condition exists, and for a minimum period of one second. While sending is suspended, a self-test message identifying the specific data item detected as oscillating is activated.

For a summary of the panels in which the data sets are used, the path is **Settings > Product Setup > Communications > IEC 61850 > DataSets > Summary**.

For the settings, navigate to **Settings > Product Setup > Communications > IEC 61850 > DataSets > TT6DataSet1** for the first data set.

Copy and paste functions are available when right-clicking a DataSet. They allow the target dataset to be configured based on its order code. If some dataset items are not supported, they are not pasted, and a warning message shows a list of dataset items that were not supported and not pasted. The **DataSet name** is not copied or pasted. In short, use this feature to copy a **DataSet Member** setting and paste it into another Member setting, a text file, or Word, as examples.

Figure 5-35: Member right-click

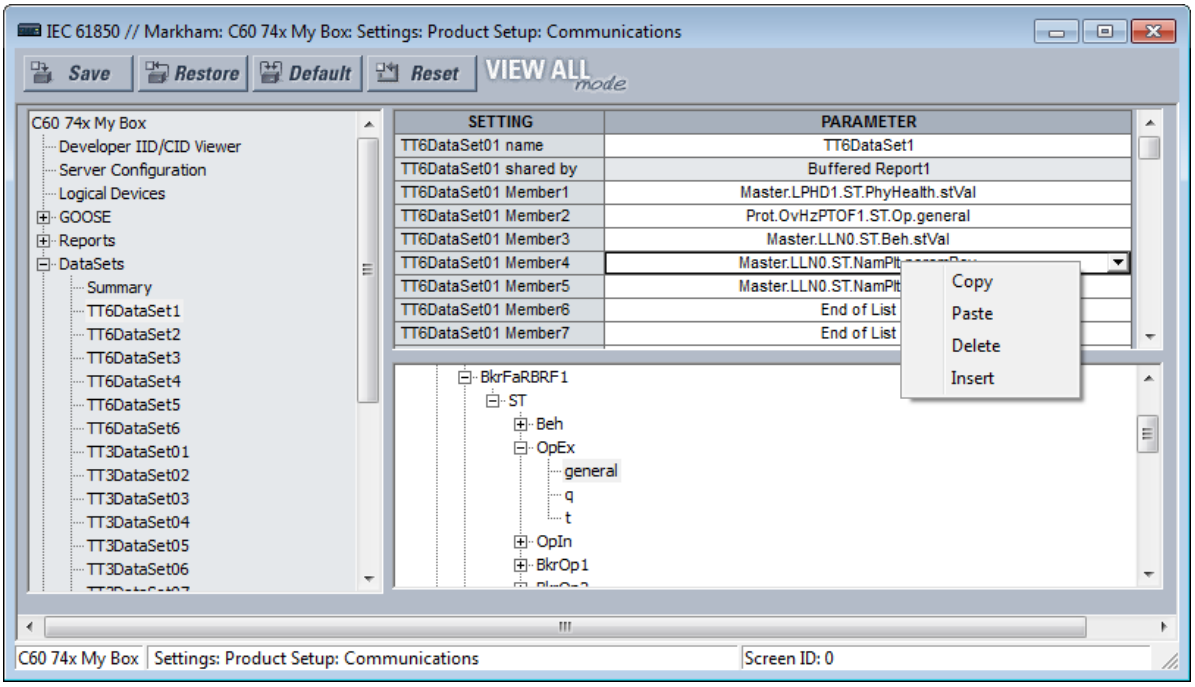

5

DataSet01 name

Range: 0 to 32 VisibleString characters

Default: DataSet01

The value entered sets the name of the data set, which is required to be unique within the UR for proper operation. The value entered sets the name of the data set, which is required to be unique within the UR for proper operation. Fast datasets start with TT6, and slow datasets start with TT3. Up to six fast datasets are allowed. Up to four fast GOOSE datasets are allowed.

An ObjectReference to the data set consists of a string that is the concatenation of "<LDName>/LLN0$" and the DataSet01 name setting value. An ObjectReference to the data set is published in the datSet field of TxGOOSE messages, and it can be used by subscribers to discriminate the messages of that TxGOOSE from other GOOSE messages. An ObjectReference to the data set is optionally published in the DatSet field of Report messages. Valid characters are upper and lowercase letters, digits, and the underscore (_) character. The first character must be a letter.

DataSet01 shared by

Range: 0 to 32 VisibleString characters

Default:

Names of all control blocks that use this DataSet. Read-only field.

DataSet01 Member1

Range: End of List or any instantiated 61850 data object or data attribute with Functional Constraint ST or MX

Default: End of List

This setting specifies the first member in TxGOOSE1 messages. There is a similar setting for each of the up to 64 members that the UR allows in a Dataset. Only values of members before the first set to End of List are published.

Select the member from the drop-down list. Or right-click an entry to copy, paste, delete, or insert.

Product setup

Navigate to **Settings > Product Setup > Communications > IEC 61850 > Product Setup**.

Security

Navigate to **Settings > Product Setup > Communications > IEC 61850 > Product Setup > Security**.

Figure 5-36: IEC 61850 Security

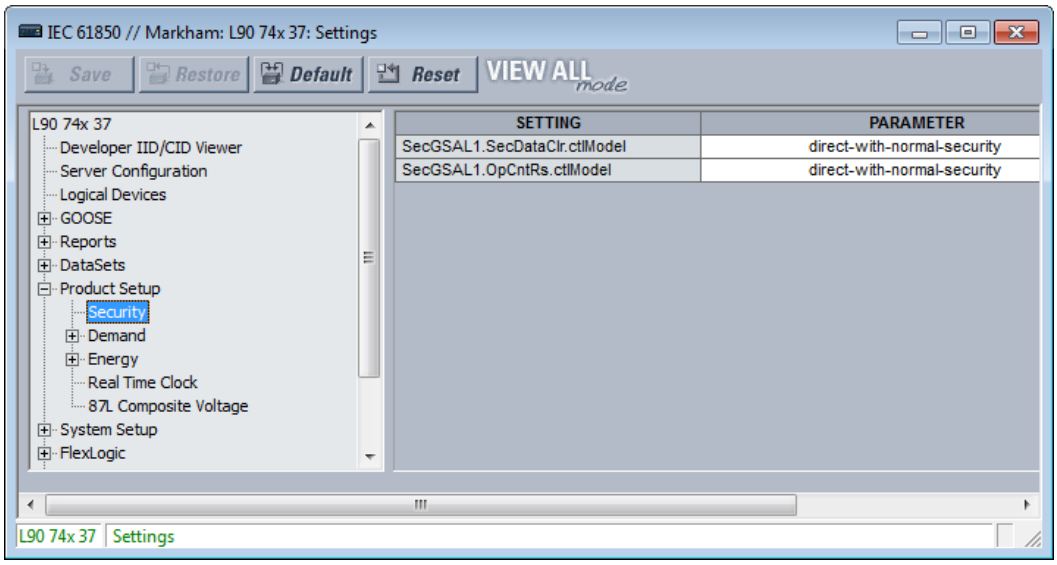

SecGSAL1.SecDataClr.ctlModel

Range: direct-with-normal-security, sbo-with-normal-security

Default: direct-with-normal-security

This setting selects the control model that clients must use to clear security data via commands to SecGSAL1.SecDataClr. "sbo" here is select-before-operate.

SecGSAL1.OpCntRs ctlModel

Range: direct-with-normal-security, sbo-with-normal-security

Default: direct-with-normal-security

This setting selects the control model that clients must use to clear security data via commands to SecGSAL1.OpCntRs. "sbo" here is select-before-operate.

Demand

Deadband parameters of measured values related to the Demand metering are configured here.

Energy

Deadband parameters of measured values related to the Energy metering are configured here.

Real Time Clock

Navigate to **Settings > Product Setup > Communications > IEC 61850 > Product Setup > Real Time Clock**.

Figure 5-37: IEC 61850 Real Time Clock

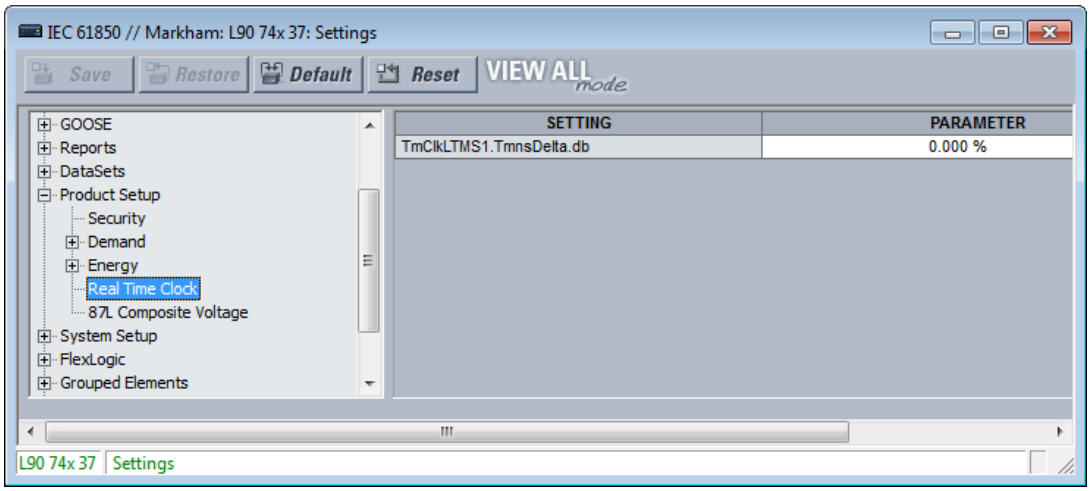

TmClkLTMS1.TmnsDelta.db

Range: 0.000 to 100.000 %

Default: 0.000 %

This setting is a deadband setting and is used by the relay to determine when to update the "mag" and "cVal" values from the associated "instMag" and "instCVal" values. The value shall represent the percentage of difference between maximum and minimum in units of 0.001%. The minimum and maximum values for TmnsDelta data object are -500000000 ns and 500000000 ns respectively and for example, a setting value of 0.002% results in the dead banded value of (500000000 - (-500000000)) * 0.002 / 100 = 20000 ns. The default setting value of 0.000% does not update the "mag" and "cVal" values.

5

Deadband settings

A deadband is a range in which no action occurs, usually expressed as a percentage.

The IEC 61850 panels contain hundreds of deadband settings, such as in the following panels: Product Setup > Real Time Clock, FlexLogic, Control Elements, and GGIO4. Each panel is not outlined here.

Deadband setting names all end either with "DB" or .db. As they all work the same way, but each on a different analog value, a single description applicable to all deadband settings is given here. The analog value that each deadband setting applies is usually obvious from the name of the setting. However, a tabulation of the analog values and their associated deadband setting can be found in the UR Family Communications Guide.

Figure 5-38: Deadband settings with .db suffix

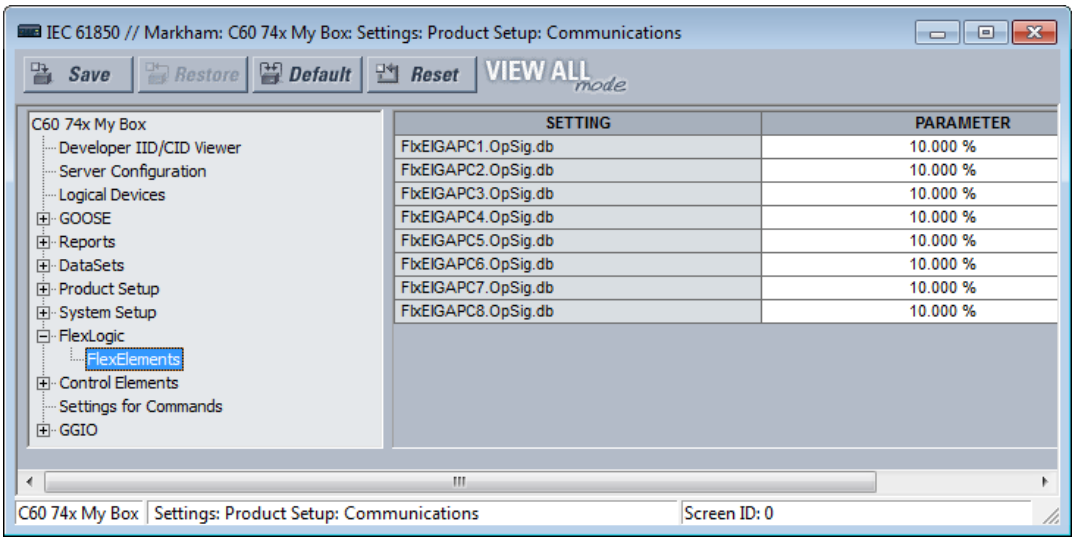

GOOSE, buffered report, and unbuffered report messages are for the most part transmitted only when there is a value change in one or more of their members. Most analog values continuously dither by an amount that is not significant. Were a report to be sent each time an insignificant analog value change occurred, then the communications network floods with GOOSE and report messages, degrading response time for all users.

To control this, a deadband setting is provided for each analog value. Also, in addition to the present actual value of each analog ("instMag" in the following figure), there is a deadbanded value ("mag" in the figure), which is updated with the present value only when the difference between the two exceeds the deadband setting (db in the figure). Changes to this deadbanded value trigger transmissions when included in GOOSE and report data sets.

5

Figure 5-39: Deadband settings

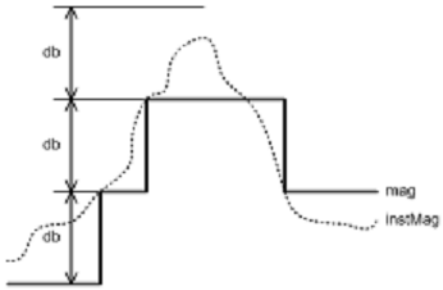

Deadband settings are entered in UR Setup software in units of percent of the difference between the "max." and "min." of the associated analog value. A zero deadband setting suppresses transmission triggering. The range of deadband settings is 0.000 to 100.000% in steps of 0.001. The default value is 0.000%.

GGIO4 elements have individual settings for "min." and "max." The min. and max. for FlxEIGAPC#.OpSig.db (FLEXELEMENT # OpSig) are -50 pu and +50 pu respectively. The min. value for all other quantities is 0. The max. values are as follows:

- Phase current — 46 x phase CT primary setting
- Neutral current — 46 x ground CT primary setting
- Ground current (sensitive ground CT) — 4.6 x sensitive ground CT primary setting
- Phase, phase-to-phase, and sequence voltage — 275 x phase VT ratio setting
- Auxiliary voltage — 275 x auxiliary VT ration setting
- Power (real, reactive, apparent, 3-phase, and 1-phase) — 4 × phase CT primary setting × 1.5 × VT Secondary setting × VT ratio setting

- Energy (real or imaginary) — 4 × phase CT primary setting × 1.5 × VT Secondary setting × VT ratio setting x 1 hour
- Frequency — 90 Hz
- Frequency rate of change — 90 Hz/s
- Power factor — 2
- Angle — 360 degrees

Select the deadband settings from knowledge of the characteristics of the power system quantity measured and knowledge of the demands of the applications receiving the measurement via GOOSE or report such that changes of significance to the application are promptly reported, yet the network is not overly burdened with event messages.

Signal sources

Deadband parameters of measured values related to the signal sources are configured here.

Breakers

The UR breaker control and status monitoring elements have certain settings that configure how the IEC 61850 protocol interacts with these elements. These settings are described in this section. See the Breakers section in the System Setup section of this chapter for details on the operation of breaker control elements.

Navigate to **Settings > Communications > IEC 61850 > System Setup > Breakers > Breaker 1** to access the settings that configure the IEC 61850 protocol interface with the first breaker control and status monitoring element. The settings and functionality for the others are similar.

Figure 5-40: IEC 61850 Breaker panel

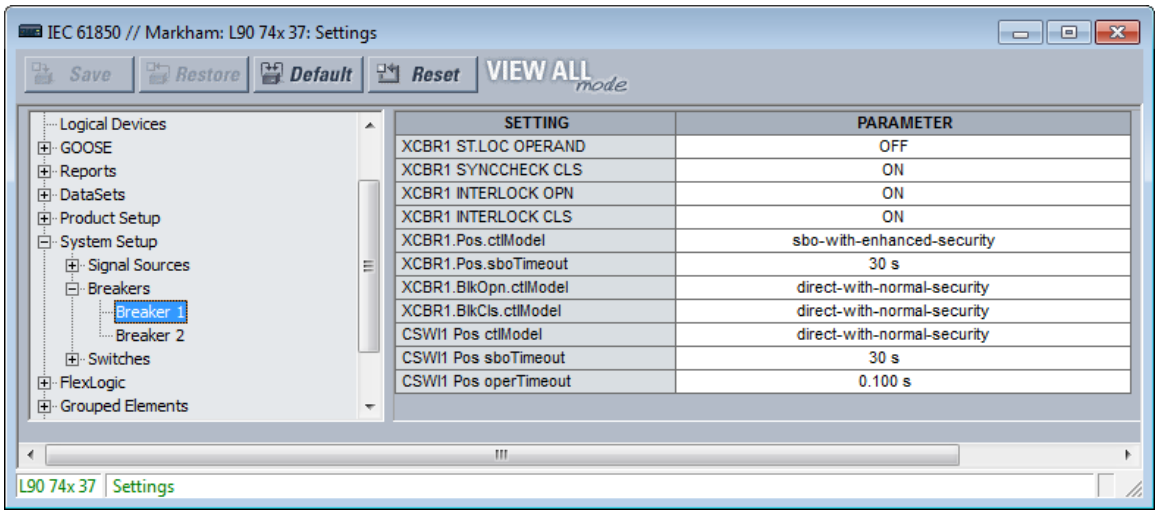

XCBR1 ST.LOC OPERAND

Range: any FlexLogic operand
Default: OFF

This setting is used to select a FlexLogic operand that declares to IEC 61850 services that breaker 1 is selected for local control. While the selected operand is asserted, Bkr0XCBR1.Loc.stVal is true and IEC 61850 commands to BkrCSWI1.Pos and Bkr0XCBR1.Pos are not accepted, and a Negative Response (-Rsp) is issued with the REASON CODE of Blocked-by-switching-hierarchy.

XCBR1 SYNCCHECK CLS

Range: any FlexLogic operand
Default: ON

This setting is used to select a FlexLogic operand that declares to IEC 61850 services that synchrocheck conditions are acceptable for closing breaker 1. If a SelectWithValue or Operate service with ctlVal true and with Check.SynchroCheck true is requested of either BkrCSWI1.Pos or Bkr0XCBR1.Pos and the selected operand is not asserted, a Negative Response (-Rsp) is issued with the REASON CODE of Blocked-by-synchrocheck.

XCBR1 INTERLOCK OPN

Range: any FlexLogic operand
Default: ON

This setting is used to select a FlexLogic operand that declares to IEC 61850 services that interlocking conditions are not acceptable for opening breaker 1. While the selected operand is asserted, the value of BkrCILO.EnaOpn.stVal is false. If a SelectWithValue or Operate service with ctlVal false and with Check.Interlock-check true is requested of either BkrCSWI1.Pos or Bkr0XCBR1.Pos, and the selected operand is not activated, a Negative Response (-Rsp) is issued with the REASON CODE of Blocked-by-interlocking.

XCBR1 INTERLOCK CLS

Range: any FlexLogic operand
Default: ON

This setting is used to select a FlexLogic operand that declares to IEC 61850 services that interlocking conditions are not acceptable for closing breaker 1. While the selected operand is asserted, the value of BkrCILO.EnaCls.stVal is false. If a SelectWithValue or Operate service with ctlVal true and with Check.Interlock-check true is requested of either BkrCSWI1.Pos or Bkr0XCBR1.Pos and the selected operand is not activated, a Negative Response (-Rsp) is issued with the REASON CODE of Blocked-by-interlocking.

XCBR1 Pos ctlModel

Range: status-only, direct-with-normal-security, sbo-with-normal-security, direct-with-enhanced-security, sbo-with-enhanced-security
Default: sbo-with-enhanced-security

This setting selects the control model clients must use to successfully control the breaker 1 signals marked Bkr0XCBR1.PosOpn.ctlVal and Bkr0XCBR1.PosCls.ctlVal on the Breaker Control Logic (Sheet 1 of 2) diagram in the Settings > System Setup section later in this chapter. These signals force a breaker 1 three-phase trip or close control while the operand selected by setting XCBR1 ST.LOC OPERAND is not active.

"sbo" here is select-before-operate. Enhanced security means that the UR reports to the client the breaker 1 position at the end of the command sequence.

XCBR1 Pos sboTimeout

Range: 2.000 to 60.000 s in steps of 1 s
Default: 30.000 s

This setting specifies the maximum time between a select and an operate command to breaker 1 signals marked Bkr0XCBR1.PosOpn.ctlVal and Bkr0XCBR1.PosCls.ctlVal in order for the operand to be successful. This setting is only relevant when XCBR1 Pos ctlModel is sbo-with-normal-security or sbo-with-enhanced-security.

XCBR1 BlkOpn ctlModel

Range: status-only, direct-with-normal-security, sbo-with-normal-security
Default: direct-with-normal-security

This setting selects the control model clients must use to successfully control the breaker 1 signal marked Bkr0XCBR1.BlkOpn.ctlVal signal on the Breaker Control Logic (Sheet 1 of 2) diagram in the Settings > System Setup section later. This signal when true blocks breaker 1 trip control while the operand selected by setting XCBR1 ST.LOC OPERAND is not active.

XCBR1 BlkCls ctlModel

Range: status-only, direct-with-normal-security, sbo-with-normal-security

Default: direct-with-normal-security

This setting selects the control model clients must use to successfully control the breaker 1 signal marked Bkr0XCBR1.BlkCls.ctlVal signal on the Breaker Control Logic (Sheet 1 of 2) diagram in the Settings > System Setup section later. This signal when true blocks breaker 1 close control while the operand selected by setting XCBR1 ST.LOC OPERAND is not active.

CSWI1 Pos ctlModel

Range: status-only, direct-with-normal-security, sbo-with-normal-security, direct-with-enhanced-security, sbo-with-enhanced-security

Default: direct-with-normal-security

This setting selects the control model clients must use to successfully control the breaker 1 signals marked BkrCSWI1.PosOpn.ctlVal and BkrCSWI1.PosCls.ctlVal on the Breaker Control Logic (Sheet 1 of 2) diagram in the Settings > System Setup section earlier. These signals force a breaker 1 three-phase trip or close control while the operand selected by setting XCBR1 ST.LOC OPERAND is not active.

CSWI1 Pos sboTimeout

Range: 2 to 60 s in steps of 1 s

Default: 30 s

This setting specifies the maximum time between a select and an operate command to breaker 1 via BkrCSWI1.Pos in order for the operand to be successful. This setting is only relevant when CSWI1 Pos ctlModel is sbo-with-normal-security or sbo-with-enhanced-security.

CSWI1 Pos operTimeout

Range: 0.000 to 2.000 s in steps of 0.001s

Default: 0.100 s

This setting specifies the maximum time between an operate command to breaker 1 via BkrCSWI1.Pos until BkrCSWI1.Pos.stVal enters the commanded state. The command terminates if the commanded state is not reached in the set time.

Switches

The UR disconnect switch control and status monitoring elements have certain settings that configure how the IEC 61850 protocol interacts with these elements. These settings are described in this section. See the Settings > System Setup > Disconnect Switches section later in this chapter for details on the operation of the disconnect switch control elements.

Navigate to **Settings > Product Setup > Communications > IEC 61850 > System Setup > Switches > Switch 1** to access the settings that configure the IEC 61850 protocol interface with the first disconnect switch control and status monitoring element. The settings and functionality for the others are similar.

Figure 5-41: Switch panel

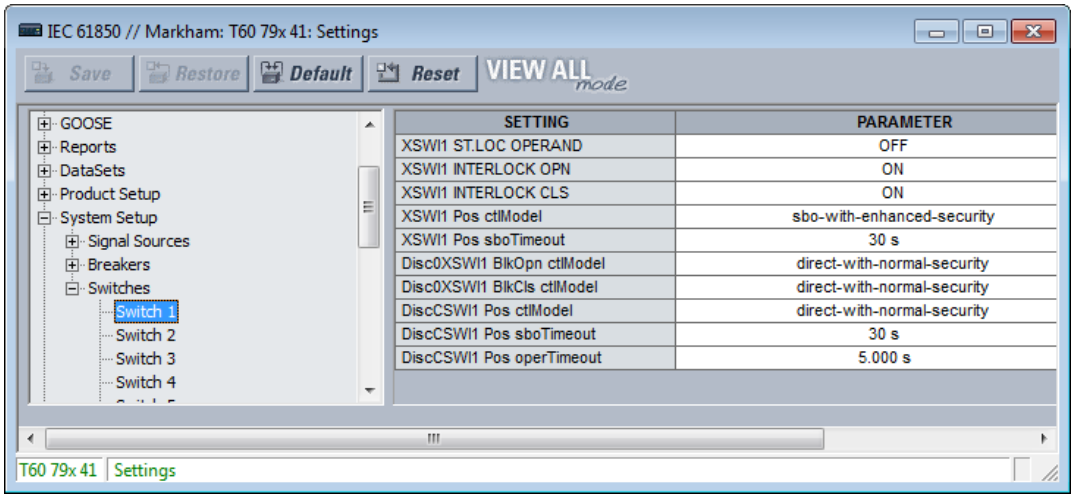

XSWI1 ST.LOC OPERAND

Range: any FlexLogic operand
Default: OFF

This setting is used to select a FlexLogic operand that declares to IEC 61850 services that disconnect switch 1 is selected for local control. While the selected operand is asserted, Disc0XSWI1.Loc.stVal is true and IEC 61850 commands to DiscCSWI1.Pos and Disc0XSWI1.Pos are not accepted, and a Negative Response (-Rsp) is issued with the REASON CODE of Blocked-by-switching-hierarchy.

XSWI1 INTERLOCK OPN

Range: any FlexLogic operand
Default: ON

This setting is used to select a FlexLogic operand that declares to IEC 61850 services that interlocking conditions are not acceptable for opening disconnect switch 1. While the selected operand is asserted, the value of DiscCILO.EnaOpn.stVal is false. If a SelectWithValue or Operate service with ctlVal false and with Check.Interlock-check true is requested of DiscCSWI1.Pos or Disc0XSWI1.Pos and the selected operand is not activated, a Negative Response (-Rsp) is issued with the REASON CODE of Blocked-by-interlocking.

XSWI1 INTERLOCK CLS

Range: any FlexLogic operand
Default: ON

This setting is used to select a FlexLogic operand that declares to IEC 61850 services that interlocking conditions are not acceptable for closing disconnect switch 1. While the selected operand is asserted, the value of DiscCILO.EnaCls.stVal is false. If a SelectWithValue or Operate service with ctlVal true and with Check.Interlock-check true is requested of DiscCSWI1.Pos or Disc0XSWI1.Pos and the selected operand is not activated, a Negative Response (-Rsp) is issued with the REASON CODE of Blocked-by-interlocking.

XSWI1 Pos ctlModel

Range: status-only, direct-with-normal-security, sbo-with-normal-security, direct-with-enhanced-security, sbo-with-enhanced-security
Default: sbo-with-enhanced-security

This setting selects the control model that clients must use to successfully control the disconnect switch 1 signals marked Disc0XCBR1.PosOpn.ctlVal and Disc0XCBR1.PosCls.ctlVal on the Disconnect Switch Logic diagram in the Settings > System Setup section later. These signals force a disconnect switch trip or close control while the operand selected by setting XSWI1 ST.LOC OPERAND is not active.

"sbo" here is select-before-operate. Enhanced security means that the L90 reports to the client the disconnect switch 1 position the end of the command sequence.

XSWI1 Pos sboTimeout

Range: 2 to 60 s in steps of 1 s

Default: 30 s

This setting specifies the maximum time between a select and an operate command to disconnect switch 1 signals marked Disc0XCBR1.PosOpn.ctlVal and Disc0XCBR1.PosCls.ctlVal in order for the operand to be successful. This setting is only relevant when XSWI1 Pos ctlModel is sbo-with-normal-security or sbo-with-enhanced-security.

Disc0XSWI1 BlkOpn ctlModel

Range: status-only, direct-with-normal-security, sbo-with-normal-security

Default: direct-with-normal-security

This setting selects the control model clients must use to successfully control the disconnect switch 1 signal marked DiscCSWI1.BlkOpn.ctlVal signal on the Disconnect Switch Logic diagram in the Settings > System Setup section later. This signal when true blocks disconnect switch 1 trip control while the operand selected by setting XSWI1 ST.LOC OPERAND is not active.

Disc0XSWI1 BlkCls ctlModel

Range: status-only, direct-with-normal-security, sbo-with-normal-security

Default: direct-with-normal-security

This setting selects the control model clients must use to successfully control the disconnect switch 1 signal marked DiscCSWI1.BlkCls.ctlVal signal on the Disconnect Switch Logic diagram in the Settings > System Setup section later. This signal when true blocks disconnect switch 1 close control while the operand selected by setting XSWI1 ST.LOC OPERAND is not active.

Disc0CSWI1 Pos ctlModel

Range: status-only, direct-with-normal-security, sbo-with-normal-security, direct-with-enhanced-security, sbo-with-enhanced-security

Default: direct-with-normal-security

This setting selects the control model clients must use to successfully control the disconnect switch 1 signals marked DiscCSWI1.PosOpn.ctlVal and DiscCSWI1.PosCls.ctlVal on the Disconnect Switch Logic diagram in the Settings > System Setup section later. These signals force a disconnect switch trip or close control while the operand selected by setting XSWI1 ST.LOC OPERAND is not active.

Disc0CSWI1 Pos sboTimeout

Range: 2 to 60 s in steps of 1 s

Default: 30 s

This setting specifies the maximum time between a select and an operate command to disconnect switch 1 via BkrCSWI1.Pos in order for the operand to be successful. This setting is only relevant when CSWI1 Pos ctlModel is sbo-with-normal-security or sbo-with-enhanced-security.

Disc0CSWI1 Pos operTimeout

Range: 0.000 to 65.535 s in steps of 0.001s

Default: 5.000 s

This setting specifies the maximum time between an operate command to disconnect switch 1 via BkrCSWI1.Pos until BkrCSWI1.Pos.stVal enters the commanded state. The command terminates if the commanded state is not reached in the set time.

Setting Groups

The UR implements a setting groups element as detailed in the Control Elements > Setting Groups section of this chapter. The active setting group and the setting group open for edits can be selected via MMS commands SelectActiveSG and SelectEditSG. The setting related to these IEC 61850 commands are described here.

Navigate to **Settings > Product Setup > Communications > IEC 61850 > Control Elements > Setting Groups** to access the setting that configures the IEC 61850 setting group commands.

Figure 5-42: Setting Groups panel

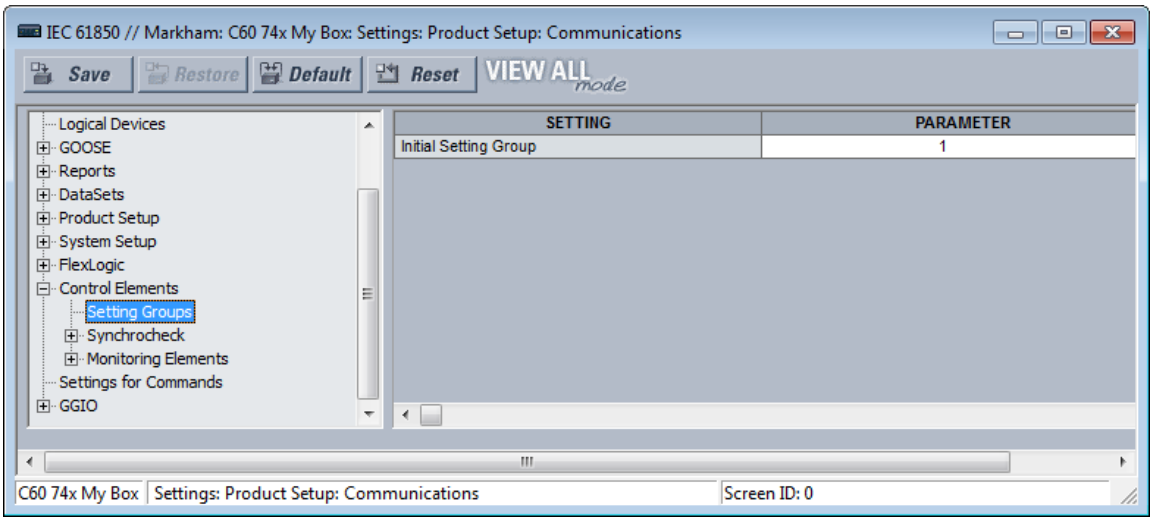

Initial Setting Group

Range: 1 to 6 in steps of 1

Default: 1

The entered value sets the initial value of the non-volatile register normally controlled by the service SelectActiveSG. This initialization occurs only on the UR reboot immediately following the receipt of a valid CID file.

This setting is not mapped into the IEC 61850 information model, but sets the value of SettingControl element attribute actSG in SCL files.

Commands

The UR implements a number of clear records commands as detailed in the Commands and Targets chapter of this manual. Several of these commands also can be issued via IEC 61850. The settings related to these IEC 61850 commands are described here.

Navigate to **Settings > Product Setup > Communications > IEC 61850 > Settings for Commands** to access the settings that configure the IEC 61850 protocol interface for record clear commands. The content varies with relay capability.

Figure 5-43: Commands panel

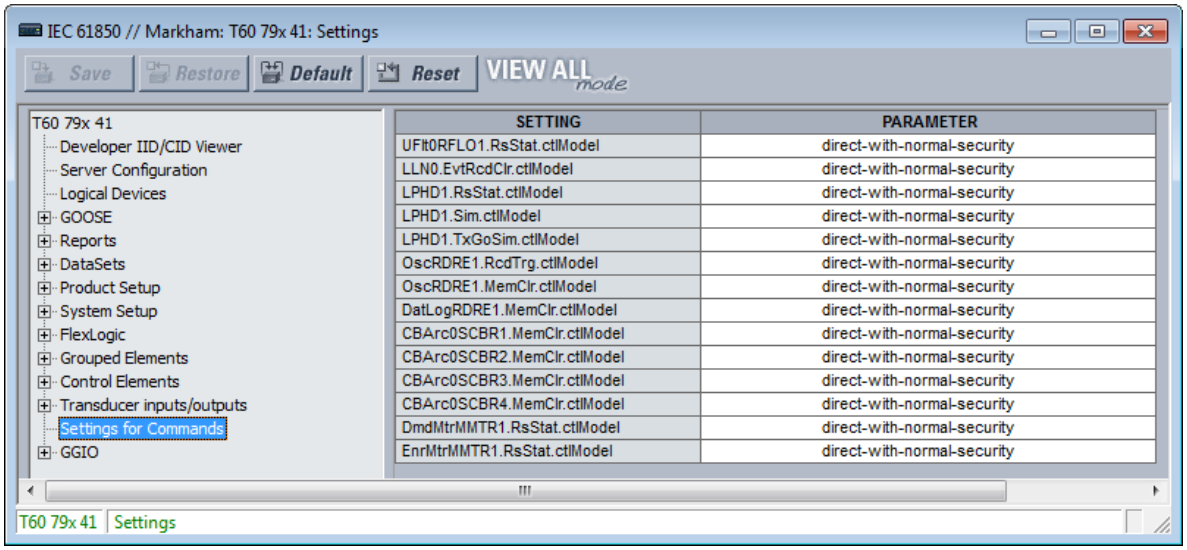

UFltRptRFLO1.RsStat.ctlModel

Range: direct-with-normal-security, sbo-with-normal-security
Default: direct-with-normal-security

This setting selects the control model clients must use to successfully control the command CLEAR FAULT REPORTS. "sbo" here is select-before-operate. Enhanced security means that the L90 reports to the client the breaker 1 position at the end of the command sequence.

LLN0.EvtRcdClr.ctlModel

Range: direct-with-normal-security, sbo-with-normal-security
Default: direct-with-normal-security

This setting selects the control model clients must use to successfully control the command CLEAR EVENT RECORDS.

LPHD1.RsStat.ctlModel

Range: direct-with-normal-security, sbo-with-normal-security
Default: direct-with-normal-security

This setting selects the control model clients must use to successfully control the command CLEAR ALL RELAY RECORDS.

LPHD1.Sim.ctlModel

Range: direct-with-normal-security, sbo-with-normal-security
Default: direct-with-normal-security

LPHD1.TxGoSim.ctlModel

Range: direct-with-normal-security, sbo-with-normal-security
Default: direct-with-normal-security

OscRDRE1.RcdTrg.ctlModel

Range: direct-with-normal-security, sbo-with-normal-security
Default: direct-with-normal-security

This setting selects the control model clients must use to successfully control the command FORCE TRIGGER.

OscRDRE1.MemClr.ctlModel

Range: direct-with-normal-security, sbo-with-normal-security
Default: direct-with-normal-security

This setting selects the control model clients must use to successfully control the command CLEAR OSCILLOGRAPHY.

DatLogRDRE1.MemClr.ctlModel

Range: direct-with-normal-security, sbo-with-normal-security
Default: direct-with-normal-security

This setting selects the control model clients must use to successfully control the command CLEAR DATA LOGGER.

CBArc0SCBR1.MemClr.ctlModel

Range: direct-with-normal-security, sbo-with-normal-security
Default: direct-with-normal-security

This setting selects the control model clients must use to successfully control the command CLEAR ARC AMPS 1.

DmdMtrMMTR1.RsStat.ctlModel

Range: direct-with-normal-security, sbo-with-normal-security
Default: direct-with-normal-security

This setting selects the control model clients must use to successfully control the command CLEAR DEMAND.

EnrMtrMMTR1.RsStat.ctlModel

Range: direct-with-normal-security, sbo-with-normal-security

Default: direct-with-normal-security

This setting selects the control model clients must use to successfully control the command CLEAR ENERGY.

GGIO1

GGIO1 is a UR feature that allows up to 128 UR FlexLogic operands to be user-mapped to IEC 61850 information model data attributes.

For the value of a FlexLogic operand to be read via MMS, included in TxGOOSE messages, or included in buffered/unbuffered reports, the value must be assigned to a data attribute. GGIO1 allows those FlexLogic operands that have not yet been factory-assigned to a data attribute to be user-assigned to a generic data attribute, and thus have their values included in IEC 61850 communications.

Navigate to **Settings > Product Setup > Communications > IEC 61850 > GGIO > GGIO1** to access the settings for GGIO1.

Figure 5-44: IEC 61850 GGIO1 panel

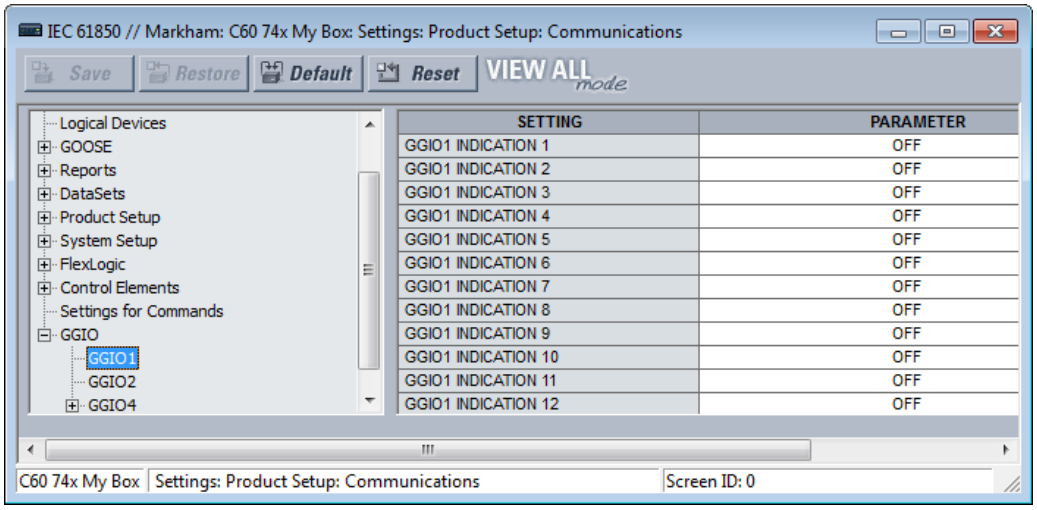

GGIO1 INDICATION 1

Range: any FlexLogic operand

Default: OFF

This setting selects the FlexLogic operand whose value is mapped into the IEC 61850 data attribute <LDName>/GGIO1.Ind001.stVal. See the FlexLogic section in this chapter for a list of FlexLogic operands.

GGIO1 INDICATION 2

Range: any FlexLogic operand

Default: OFF

Selects the FlexLogic operand mapped to <LDName>/GGIO1.Ind002.stVal, and so on.

GGIO2

Virtual Inputs are controllable FlexLogic operands that can be controlled via IEC 61850 commands to GGIO2, by DNP, by Modbus, and by the UR front panel. The settings related to these IEC 61850 commands are described here.

Navigate to **Settings > Product Setup > Communications > IEC 61850 > GGIO > GGIO2** to access the settings that configure the IEC 61850 protocol interface for Virtual Input commands.

Figure 5-45: GGIO2 panel

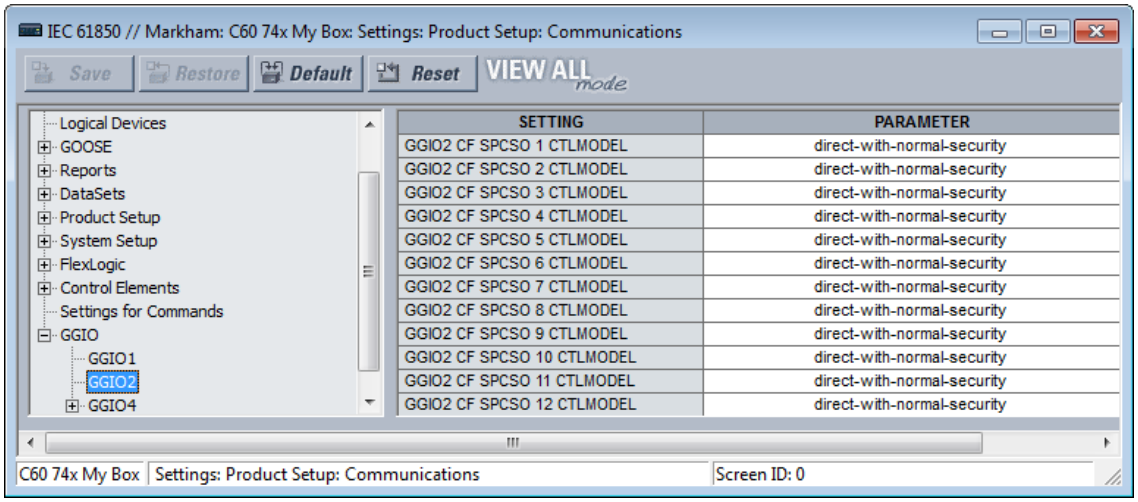

GGIO2 CF SPCSO 1 CTLMODEL

Range: status-only, direct-with-normal-security, sbo-with-normal-security
Default: direct-with-normal-security

This setting selects the control model clients must use to successfully control Virtual Input 1. "sbo" here is select-before-operate.

GGIO2 CF SPCSO 2 CTLMODEL

Range: status-only, direct-with-normal-security, sbo-with-normal-security
Default: direct-with-normal-security

Selects the control model for Virtual Input 2, and so on.

GGIO4

GGIO4 is a UR feature that allows up to 32 UR FlexAnalog operands to be user-mapped to an IEC 61850 information model data attribute.

For the value of a FlexAnalog operand to be read via MMS, included in TxGOOSE messages, or included in buffered/unbuffered reports, the value must be assigned to a data attribute. GGIO4 allows those FlexAnalog operands that have not yet been factory-assigned to a data attribute to be user-assigned to a generic data attribute, and thus have their values included in IEC 61850 communications.

Navigate to **Settings > Product Setup > Communications > IEC 61850 > GGIO > GGIO4 > GGIO4.AnIn1** to access the settings for the first GGIO4 value. The settings and functionality for the others are similar.

Figure 5-46: GGIO4 panel

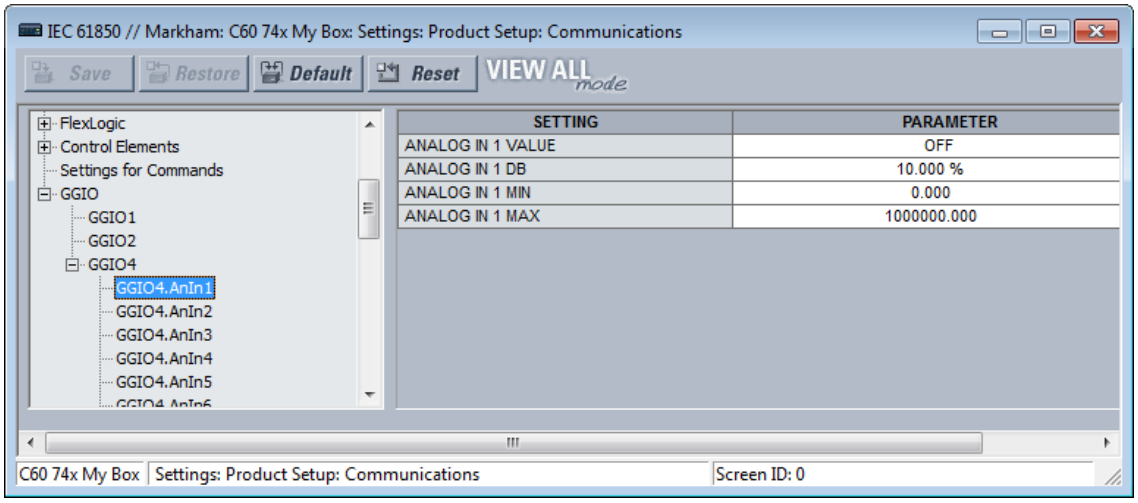

ANALOG IN 1 VALUE

Range: any FlexAnalog operand
Default: OFF

This setting selects the FlexAnalog operand whose value is mapped into the IEC 61850 data attribute <LDName>/GGIO4.AnIn01.instMag.f. The value of the FlexAnalog operand is converted automatically to the format and scaling required by the standard, that is to say primary amperes, primary volts, and so on. See Appendix A for a list of FlexAnalog operands.

ANALOG IN 1 DB

Range: 0.000 to 100.000% in steps of 0.001
Default: 0.000%

This setting specifies the deadband for the **ANALOG IN 1 VALUE**. The deadband is used to determine when to update the deadbanded magnitude from the instantaneous magnitude. The deadband is a percentage of the difference between the "max." and "min." values. Here, the "max." and "min." are as specified by the settings **ANALOG IN 1 MAX** and **ANALOG IN 1 MIN**.

See the Deadband Settings section earlier for a description of deadbanded values.

ANALOG IN 1 MIN

Range: -1000000000.000 to 1000000000.000 in steps of 0.001
Default: 0.000

This setting specifies the "min." value used in deadband calculations. The scaling of this setting is the same as used by <LDName>/GGIO4.AnIn01.instMag.f. This setting is stored as an IEEE 754 / IEC 60559 floating point number. Because of the large range of this setting, not all possible values can be stored. Some values are rounded to the closest possible floating point number.

ANALOG IN 1 MAX

Range: -1000000000.000 to 1000000000.000 in steps of 0.001
Default: 1000000.000

This setting specifies the "max." value used in deadband calculations. The scaling of this setting is the same as used by <LDName>/GGIO4.AnIn01.instMag.f. This setting is stored as an IEEE 754 / IEC 60559 floating point number. Because of the large range of this setting, not all possible values can be stored. Some values are rounded to the closest possible floating point number.

File transfer by IEC 61850

The L90 supports file transfer by IEC 61850. The approach is as follows, using the SISCO AX-S4 61850 client software as an example.

1. In the AX-S4 61850 Explorer window, click the **Tools** menu and access the SISCO File Transfer Utility.
2. Select the **Remote AR Name** from the drop-down list. Available files appear in the **File Specification** area on the right side of the window.
3. With the **Copy** option active, select a file to transfer and click the **Go** button. The file is copied and displays in the **Local** list on the left side of the window.
4. Repeat the process to transfer any other files.

Figure 5-47: File transfer by IEC 61850

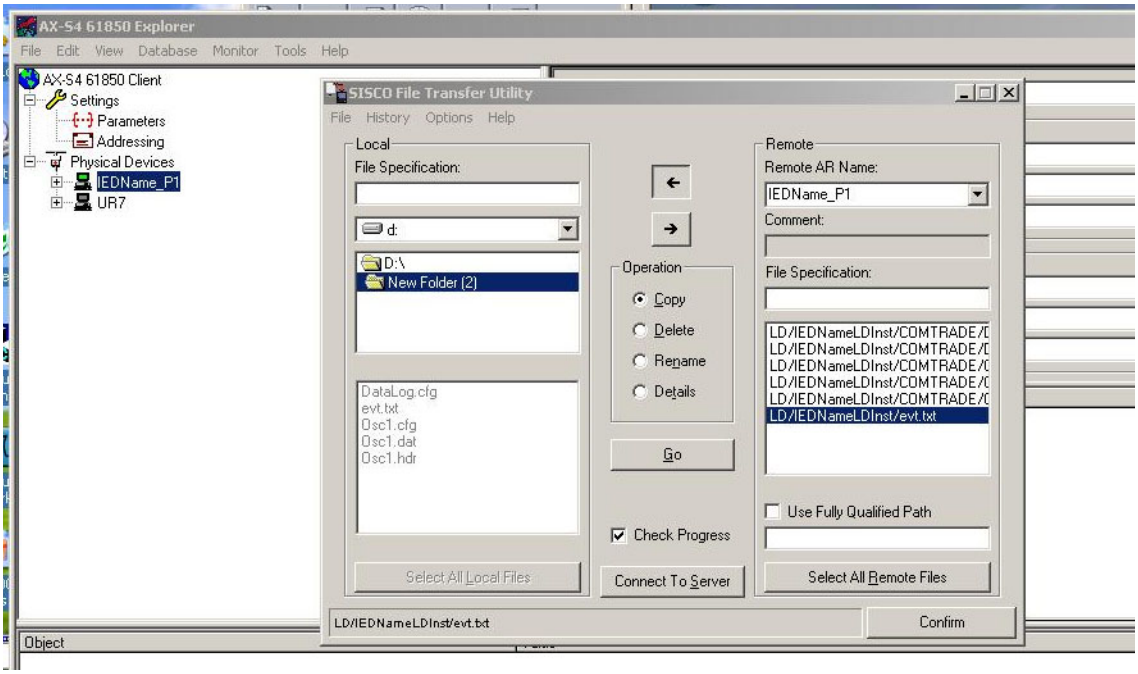

5.3.5.13 Web server HTTP protocol

SETTINGS ⇨ PRODUCT SETUP ⇨⇩ COMMUNICATIONS ⇨⇩ WEB SERVER HTTP PROTOCOL

■ **WEB SERVER** ■ **HTTP PROTOCOL**	⇔	**HTTP TCP PORT NUMBER(80): 80**	Range: 0 to 65535 in steps of 1

The L90 contains an embedded web server and can display pages in a web browser. The web pages are organized as a series of menus that can be accessed starting at the L90 "Main Menu." Web pages are read-only and are available showing IEC 60870-5-104 points lists, Modbus registers, event records, fault reports, and so on. First connect the L90 and a computer to an Ethernet network, then enter the IP address of the L90 Ethernet port in a web browser.

To close the port, set the port number to 0.

Any change takes effect when the L90 is restarted.

Figure 5-48: Example of UR web page showing event records

GE Multilin

C60 Breaker Relay
Revision 7.31

Relay Name: **Relay-1**
IP Address: **10.14.22.72**

UR

Event Recorder: Last 10 Events

Click Here For The Main Menu

Event Number	Time and Date	Event Cause
214	Nov 04 2014 14:02:56.062087	PROTOTYPE FIRMWARE
213	Nov 04 2014 14:02:56.062087	POWER ON
212	Nov 03 2014 14:00:20.364906	POWER OFF
211	Nov 03 2014 13:55:15.061866	PROTOTYPE FIRMWARE
210	Nov 03 2014 13:55:15.061866	POWER ON
209	Nov 03 2014 13:10:59.733179	POWER OFF
208	Nov 03 2014 13:06:11.062104	PROTOTYPE FIRMWARE
207	Nov 03 2014 13:06:11.062104	POWER ON
206	Oct 31 2014 10:07:25.078203	POWER OFF
205	Oct 31 2014 10:00:44.062027	PROTOTYPE FIRMWARE

NOTE

Do not set more than one protocol to the same TCP/UDP port number, as this results in unreliable operation of those protocols.

5

5.3.5.14 TFTP protocol

SETTINGS ⇨ PRODUCT SETUP ⇨⇩ COMMUNICATIONS ⇨⇩ TFTP PROTOCOL

■ TFTP PROTOCOL ■	⇔	TFTP MAIN UDP PORT NUMBER(69): 69	Range: 0 to 65535 in steps of 1
	⇩	TFTP DATA UDP PORT 1 NUMBER: 0	Range: 0 to 65535 in steps of 1
	⇧	TFTP DATA UDP PORT 2 NUMBER: 0	Range: 0 to 65535 in steps of 1

The Trivial File Transfer Protocol (TFTP) can be used to transfer files from the L90 over a network. The L90 operates as a TFTP server. TFTP client software is available from various sources, including Microsoft Windows NT. The dir.txt file obtained from the L90 contains a list and description of all available files, for example event records and oscillography.

The "put" function is not for security reasons. You can enter a "get" command but not a "put" command.

TFTP MAIN UDP PORT NUMBER — To close the port, set the port number to 0. Any change takes effect when the L90 is restarted.

NOTE

Do not set more than one protocol to the same TCP/UDP port number, as this results in unreliable operation of those protocols.

5.3.5.15 IEC 60870-5-104 protocol

SETTINGS ⇨ PRODUCT SETUP ⇨⇩ COMMUNICATIONS ⇨⇩ IEC 60870-5-104 PROTOCOL

■ IEC 60870-5-104 ■ PROTOCOL	⇔	IEC TCP PORT NUMBER: 2404	Range: 0 to 65535 in steps of 1
	⇩	■ IEC NETWORK ■ CLIENT ADDRESSES	See below

⇕	IEC COMMON ADDRESS OF ASDU: 0	Range: 0 to 65535 in steps of 1
⇕	IEC CYCLIC DATA PERIOD: 60 s	Range: 1 to 65535 s in steps of 1
⇕	IEC CURRENT DEFAULT THRESHOLD: 30000	Range: 0 to 100000000 in steps of 1
⇕	IEC VOLTAGE DEFAULT THRESHOLD: 30000	Range: 0 to 100000000 in steps of 1
⇕	IEC POWER DEFAULT THRESHOLD: 30000	Range: 0 to 100000000 in steps of 1
⇕	IEC ENERGY DEFAULT THRESHOLD: 30000	Range: 0 to 100000000 in steps of 1
⇕	IEC PF DEFAULT THRESHOLD: 1.00	Range: 0.00 to 1.00
⇕	IEC OTHER DEFAULT THRESHOLD: 30000	Range: 0 to 100000000 in steps of 1
⇧	IEC REDUNDANCY ENABLED: No	Range: No, Yes

IEC 60870-5-104 is a transmission protocol for network access, specifically for communication between a control station and substation over a TCP/IP network.

5

The L90 supports the IEC 60870-5-104 protocol. This protocol is enabled when the **SETTINGS ⇨ PRODUCT SETUP ⇨⇩ COMMUNICATIONS ⇨ PROTOCOL** setting is set to IEC 60870-5-104. The L90 can be used as an IEC 60870-5-104 slave device connected to a maximum of two masters (usually either an RTU or a SCADA master station). Since the L90 maintains two sets of IEC 60870-5-104 data change buffers, ideally no more than two masters actively communicate with the L90 at one time.

The **IEC ------- DEFAULT THRESHOLD** settings are used to determine when to trigger spontaneous responses containing M_ME_NC_1 analog data. These settings group the L90 analog data into types: current, voltage, power, energy, and other. Each setting represents the default threshold value for all M_ME_NC_1 analog points of that type. For example, to trigger spontaneous responses from the L90 when any current values change by 15 A, the **IEC CURRENT DEFAULT THRESHOLD** setting is set to 15. Note that these settings are the default values of the deadbands. P_ME_NC_1 (parameter of measured value, short floating point value) points can be used to change threshold values, from the default, for each individual M_ME_NC_1 analog point. Whenever power is removed and re-applied to the L90, the default thresholds are in effect.

The **IEC REDUNDANCY** setting decides whether multiple client connections are accepted or not. If redundancy is set to Yes, two simultaneous connections can be active at any given time.

IEC TCP PORT NUMBER — To close the port, set the port number to 0. Any change takes effect when the L90 is restarted.

IEC COMMON ADDRESS OF ASDU — The change takes effect when the L90 is restarted.

IEC CYCLIC DATA PERIOD — The change takes effect when the L90 is restarted.

NOTE

Do not set more than one protocol to the same TCP/UDP port number, as this results in unreliable operation of those protocols.

SETTINGS ⇨ PRODUCT SETUP ⇨⇩ COMMUNICATIONS ⇨⇩ IEC 60870-5-104 PROTOCOL ⇨⇩ IEC NETWORK CLIENT ADDRESSES

■ IEC NETWORK ■ CLIENT ADDRESSES	⇔	CLIENT ADDRESS 1: 0.0.0.0	Range: standard IPV4 address format
		⇩	
	⇧	CLIENT ADDRESS 5: 0.0.0.0	Range: standard IPV4 address format

The L90 can specify a maximum of five clients for its IEC 104 connections. These are IP addresses for the controllers to which the L90 can connect. A maximum of two simultaneous connections are supported at any given time.

5.3.5.16 IEC 60870-5-103 protocol

SETTINGS ⇨ PRODUCT SETUP ⇨⇩ COMMUNICATIONS ⇨⇩ IEC 60870-5-103

■ IEC103 ■ PROTOCOL	⇔	IEC103 COMMON ADDRESS OF ASDU: 0	Range: 0 to 254 in steps of 1
	⇩	IEC103 SYNC TIMEOUT: 1	Range: 1 to 1440 min in steps of 1
	⇩	■ IEC103 INPUTS ■ BINARY	See below
	⇩	■ IEC103 INPUTS ■ MEASURANDS	See below
	⇧	■ IEC103 COMMANDS ■	See below

SOFTWARE OPTION

The L90 is provided with optional IEC 60870-5-103 communications capability. This feature is specified as a software option at the time of ordering. See the Order Codes section in chapter 2 for details.

IEC 60870-5-103 is a companion standard to the IEC 60870-5 suite of standards for transmission protocols. It defines messages and procedures for interoperability between protection equipment and devices of a control system in a substation for communicating on a serial line.

The IEC 60870-5-103 protocol is enabled when the **SETTINGS ⇨ PRODUCT SETUP ⇨⇩ COMMUNICATIONS ⇨ PROTOCOL** setting is set to IEC 60870-5-103.

The IEC 60870-5-103 is an unbalanced (master-slave) protocol for coded-bit serial communication, exchanging information with a control system. In the context of this protocol, the protection equipment is the slave and the control system is the master. The communication is based on a point-to-point principle. The master must be able to interpret the IEC 60870-5-103 communication messages.

The UR implementation of IEC 60870-5-103 consists of the following functions:

- Report binary inputs
- Report analog values (measurands)
- Commands
- Time synchronization

The RS485 port supports IEC 60870-5-103.

The UR Family Communications Guide contains more information on the protocol.

IEC103 COMMON ADDRESS OF ASDU — This setting uniquely defines this L90 on the serial line. Select an ID between 0 and 254. This ID does not need to be in sequential order for all stations that communicate with a controller, but it is recommended. Note that RS485 only allows a maximum of 32 slave stations on a communication line, so the entire range of 254 addresses is never exhausted.

IEC103 SYNC TIMEOUT — This setting defines the time that the L90 waits for a synchronization message. The L90 synchronizes its clock using all available sources, with the source synching more frequently overwriting the time of the other sources. Since the synchronization message received from the IEC 60870-5-103 master is less frequent than IRIG-B, PTP, or SNTP, its time is overwritten by these three sources, if any of them is active. If the synchronization timeout occurs and none of IRIG-B, PTP, or SNTP is active, the L90 sets the invalid bit in the time stamp of a time-tagged message.

The settings for the remaining menus are outlined as follows.

SETTINGS ⇨ PRODUCT SETUP ⇨⇩ COMMUNICATIONS ⇨⇩ IEC 60870-5-103 ⇨⇩ IEC103 INPUTS BINARY

■ IEC103 INPUTS ■ BINARY	⇔	■ POINT 0 ■	See below

```
                    ⇕  ■ POINT 1                  See below
                       ■
                       ⇩
                    ⇧  ■ POINT 95                 See below
                       ■

■ POINT 0           ⇔  POINT 0 FUN                Range:  0 to 255 in steps of 1
■                      0
                    ⇕  POINT 0 INF                Range:  0 to 255 in steps of 1
                       0
                    ⇧  POINT 0 Input              Range:  FlexLogic operand
                       Off
                       ⇩

■ POINT 95          ⇔  POINT 95 FUN               Range:  0 to 255 in steps of 1
■                      0
                    ⇕  POINT 95 INF               Range:  0 to 255 in steps of 1
                       0
                    ⇧  POINT 95 Input             Range:  FlexLogic operand
                       Off
```

5

The binary input points are mapped using elements from a list of possible FlexLogic operands. A maximum of 96 binary inputs (points) can be mapped this way.

The IEC 60870-5-103 point list always starts with point 0 and ends at the first "Off" value. Since the IEC 60870-5-103 point list must be in a continuous block, any points assigned after the first "Off" point are ignored.

For each defined point, set appropriate values for the Function Type (FUN) and Information Number (INF), which form the Information Object Identifier field of the ASDU, as defined in IEC 60870-5-103.

The binary input points are sent as Class 1 data. They are sent either as a response to a general interrogation received from the controller or reported spontaneously. Spontaneous transmission occurs as a response to cyclic Class 2 requests. If the L90 wants to transmit Class 1 data at that time, it demands access for Class 1 data transmission (ACD=1 in the control field of the response).

For any change to take effect, restart the relay.

SETTINGS ⇨ PRODUCT SETUP ⇨⇩ COMMUNICATIONS ⇨⇩ IEC 60870-5-103 ⇨⇩ IEC103 INPUTS MEASURANDS

```
■ IEC103 INPUTS     ⇔  ■ ASDU 1                   See below
■ MEASURANDS           ■
                       ⇩
                    ⇧  ■ ASDU 4
                       ■

■ ASDU 1            ⇔  ASDU 1 TYP:                Range:  3 or 9
■                      9
                    ⇕  ASDU 1 FUN:                Range:  0 to 255 in steps of 1
                       0
                    ⇕  ASDU 1 INF:                Range:  0 to 255 in steps of 1
                       0
                    ⇕  ASDU 1 SCAN TOUT:          Range:  0 to 1000 s in steps of 1
                       0
```

	⇕	**ASDU 1 ANALOG 1 Off**	Range: FlexAnalog parameter
	⇕	**ASDU 1 ANALOG 1 FACTOR: 1.000**	Range: 0.000 to 65.535 in steps of 0.001
	⇕	**ASDU 1 ANALOG 1 OFFSET: 0**	Range: -32768 to 32767 in steps of 1
	⇩		
	⇕	**ASDU 1 ANALOG 9 Off**	Range: FlexAnalog parameter
	⇕	**ASDU 1 ANALOG 9 FACTOR: 1.000**	Range: 0.000 to 65.535 in steps of 0.001
	⇕	**ASDU 1 ANALOG 9 OFFSET: 0**	Range: -32768 to 32767 in steps of 1
	⇩		
■ **ASDU 4** ■	⇕	**ASDU 4 TYP: 9**	Range: 3 or 9
	⇕	**ASDU 4 FUN: 0**	Range: 0 to 255 in steps of 1
	⇕	**ASDU 4 INF: 0**	Range: 0 to 255 in steps of 1
	⇕	**ASDU 4 SCAN TOUT: 0**	Range: 0 to 1000 s in steps of 1
	⇕	**ASDU 4 ANALOG 1 Off**	Range: FlexAnalog parameter
	⇕	**ASDU 4 ANALOG 1 FACTOR: 1.000**	Range: 0.000 to 65.535 in steps of 0.001
	⇕	**ASDU 4 ANALOG 1 OFFSET: 0**	Range: -32768 to 32767 in steps of 1
	⇩		
	⇕	**ASDU 4 ANALOG 9 Off**	Range: FlexAnalog parameter
	⇕	**ASDU 4 ANALOG 9 FACTOR: 1.000**	Range: 0.000 to 65.535 in steps of 0.001
	⇧	**ASDU 4 ANALOG 9 OFFSET: 0**	Range: -32768 to 32767 in steps of 1

The configuration menu allows a maximum of four ASDUs containing measurands.

Measurands are sent as a response to Class 2 requests, which are cyclic requests coming from the master.

TYPE IDENTIFICATION (TYP) — The configuration field TYP indicates how many measurands are present in the corresponding ASDU. Each ASDU can take either 4 or 9 measurands maximum, depending on the type identification (3 respectively 9). For any change to take effect, restart the relay.

FUNCTION TYPE (FUN) and **INFORMATION NUMBER (INF)** — These two fields form the Information Object Identifier of the ASDU as defined in IEC 60870-103. For any change to take effect, restart the relay.

SCAN TIMEOUT (SCAN TOUT) — This is the cyclic period used by the L90 to decide when a measurand ASDU is included in a response. The measurand is sent as response to a Class 2 request when the corresponding timeout expires. The default value 0 means 500 ms.

ANALOG # — This field contains the actual measurand to be sent in the response to the master. The measurands can be mapped using elements from a list of FlexAnalog operands. The measurands sent are voltage, current, power, power factor, and frequency. If any other FlexAnalog is chosen, the L90 sends 0 instead of its value. Note that the power is transmitted in KW, not W. Measurands are transmitted as ASDU 3 or ASDU 9 (type identification value set to measurands I, respectively measurands II).

Each IEC 60870-5-103 measurands list ends at the first unconfigured ("Off") value. Any measurand assigned after the first "Off" value is ignored.

At least one measurand per ASDU must be configured in order to configure the following ASDU. For example, the user can configure only one measurand for each ASDU, but the user is not allowed to skip ASDU 2 and configure measurands in ASDU 3.

For any change to take effect, restart the relay.

ANALOG # FACTOR and **OFFSET** — For each measurand included in the ASDU, a factor and offset also can be configured. The factor and offset allow for scaling to be performed on measurands. The final measurement sent to the IEC 60870-103 master is then "a*x + b," where x is the measurand, a is the multiplying factor and b is the offset. The master has to perform the reversed operation in order to retrieve the actual value if such scaling is done. By default a = 1 and b = 0, so no scaling is done if these values are left at their defaults. Examples of when scaling is appropriate are as follows:

- If the measured value contains decimals and it is important to preserve the resolution. Since the format for transmitting the measurand does not permit decimals, a factor a>1 can be applied before transmission. For example, a frequency F=59.9Hz can be transmitted as Ft = 10 * F = 10 * 59.9 = 599. In this case a = 10, b = 0. The master receives 599 and has to divide by 10 to retrieve the real value 59.9.
- If the measured value is larger than what fits in the format defined in IEC 103. The format defined in the standard allows for signed integers up to 4095. By offsetting, unsigned integers up to 4096 + 4095 = 8191 are supported. Scaling using factors <1 can be required in such cases. The calculation is outlined in the IEC 60870-5-103 chapter of the UR Family Communications Guide. Two examples follow, where you decide factors a and b.

  Example 1: Nominal power Pn = 100 MW = 100000 KW (power is transmitted in KW)

  Since P can be both positive and negative:

  Transmitted power Pt = (4095/(Pn*2.4)) * P = (4095/(100000 * 2.4)) * P

  = 0.017 * P

  a = 0.017

  b = 0

  Pt = 0.017 * P

  For a max power 100000 KW * 2.4 = 240000 KW, we transmit

  Pt = 0.017 * 240000 = 4080

  A value above 240 MW is indicated by overflow.

  Example 2: Nominal voltage Vn = 500000 V

  Since RMS voltage V can be only positive:

  Transmitted voltage Vt = (8191/(Vn*2.4)) * V - 4096 =

  = (8191/(500000 * 2.4)) * V - 4096 = 0.0068 * V - 4096

  a = 0.0068

  Since the step is in increments of 0.001, we round it at:

  a = 0.006

  b = -4096

  Vt = 0.006 * V - 4096

  For max voltage 500000 V * 2.4 = 1200000 V, we transmit

  Vt = 0.006 * 1200000 - 4096 = 7200 - 4096 = 3104

SETTINGS ⇨ PRODUCT SETUP ⇨⇩ COMMUNICATIONS ⇨⇩ IEC 60870-5-103 ⇨⇩ IEC103 COMMANDS

■ IEC103 COMMANDS ■	⇔	■ COMMAND 0 ■	See below
	⇩	■ COMMAND 1 ■	
		⇩	
	⇧	■ COMMAND 31 ■	

■ COMMAND 0 ■	⇔	COMMAND 0 FUN: 0	Range: 0 to 255 in steps of 1
	⇩	COMMAND 0 INF: 0	Range: 0 to 255 in steps of 1
	⇩	COMMAND 0 ON: Off	Range: Virtual input
	⇧	COMMAND 0 OFF: Off	Range: Virtual input
		⇩	
■ COMMAND 31 ■	⇔	COMMAND 31 FUN: 0	Range: 0 to 255 in steps of 1
	⇩	COMMAND 31 INF: 0	Range: 0 to 255 in steps of 1
	⇩	COMMAND 31 ON: Off	Range: Virtual input
	⇧	COMMAND 31 OFF: Off	Range: Virtual input

Commands are received as General Command (Type Identification 20). The user can configure the action to perform when an ASDU command comes.

A list of available mappings is provided on the L90. This includes 64 virtual inputs (see the following table). The ON and OFF for the same ASDU command can be mapped to different virtual inputs.

Each command is identified by the unique combination made by the function type (FUN) and information number (INF). If the master sends an ASDU command that does not have the FUN and INF of any configured command, the relay rejects it.

Table 5-12: Commands mapping table

Description	Value
Off	0
Virtual Input 1	1
Virtual Input 2	2
...	...
Virtual Input 64	64

For any change to take effect, restart the relay.

5.3.5.17 USB port

SETTINGS ⇨ PRODUCT SETUP ⇨⇩ COMMUNICATIONS ⇨⇩ USB 2.0

■ USB 2.0 ■	⇔	USB DEVICE PORT FUNCTION: Enabled	Range: Disabled, Enabled

SOFTWARE OPTION

This setting applies to the USB port on the graphical front panel.

This setting enables/disables the USB port on the graphical front panel. When the port function is "Enabled," a standard USB serial cable allows a computer running the EnerVista UR Setup software to retrieve, display, and write settings either individually or collectively, to display status and actual values, to initiate controls, and to retrieve and display event records, oscillography records, data logger records, and disturbance records. Installation of the EnerVista software automatically installs the drivers required to use this USB port.

DNP is not available using the USB port on the graphical front panel.

5.3.6 Modbus user map

SETTINGS ⇨ PRODUCT SETUP ⇨⇩ MODBUS USER MAP

■ MODBUS USER MAP ■	⇔	ADDRESS 1: 0 VALUE: 0	Range: 0 to 65535 in steps of 1
		⇩	
	⇧	ADDRESS 256: 0 VALUE: 0	Range: 0 to 65535 in steps of 1

The Modbus user map provides read-only access for up to 256 registers. To obtain a memory map value, enter the address in the **ADDRESS** line (converted from hex to decimal format). The corresponding value (if programmed) displays in the **VALUE** line. A value of "0" in subsequent register **ADDRESS** lines automatically returns values for the previous **ADDRESS** lines incremented by 1. An address value of "0" in the initial register means "none" and values of "0" display for all registers. Different **ADDRESS** values can be entered as required in any of the register positions.

The UR Family Communications Guide outlines the Modbus memory map. The map is also viewable in a web browser; enter the IP address of the L90 in a web browser and click the option.

5

5.3.7 Real-time clock

5.3.7.1 Menu

SETTINGS ⇨ PRODUCT SETUP ⇨⇩ REAL TIME CLOCK

■ REAL TIME ■ CLOCK	⇔	SYNCRONIZING SOURCE: None	Range: None, PP/IRIG-B/PTP/Other, IRIG-B/PP/PTP/Other, PP/PTP/IRIG-B/Other
	⇩	REAL TIME CLOCK EVENTS: Disabled	Range: Enabled, Disabled
	⇩	IRIG-B SIGNAL TYPE: None	Range: None, DC Shift, Amplitude Modulated
	⇩	■ PRECISION TIME ■ PROTOCOL (1588)	See below
	⇩	■ SNTP PROTOCOL ■	See below
	⇧	■ LOCAL TIME ■	See below

The relay contains a real time clock (RTC) to create time stamps for communications protocols as well as for historical data, such as event records and oscillography. When the relay restarts, the RTC initializes from an onboard battery-backed clock, which has the same accuracy as an electronic watch, approximately ±1 minute per month (~23 ppm). Once the RTC is synchronized with the Precision Time Protocol (PTP), IRIG-B, or SNTP, its accuracy approaches that of the synchronizing time delivered to the relay. While the RTC is not synchronized via PTP or IRIG-B, or the relay determines that it has an offset

possibly greater than 10 µs from the international time standard, the CLOCK UNSYNCHRONIZED FlexLogic operand is activated. When the L30/L90 channel asymmetry function is used, the relay's real time clock must be synchronized to an external time source using PTP or IRIG-B, typically from a global positioning system (GPS) receiver.

The **SYNCHRONIZING SOURCE** setting displays in the software when the relay includes the IEEE 1588 software option. The setting configures the priority sequence of the time synchronization source, to determine which of the available external time sources to use for time synchronization. A setting of None causes the RTC and the synchrophasor clock to free-run, and the clock can be changed from the front panel or from communications protocols. A setting of PP/IRIG-B/PTP/Other, IRIG-B/PP/PTP/Other, or PP/PTP/IRIG-B/Other causes the relay to track the first source named that is enabled and operational, or free-run if none of these are available. Here, PP means a time source that is strictly compliant with PP, PTP means a time source that is not strictly compliant with PP, and Other means any less precise source (SNTP, IEC 103, IEC 104, Modbus, or DNP). When a time source fails or recovers, the relay automatically transfers synchronization as required by this setting.

When the relay does not have the IEEE 1588 software option and this setting does not display, it uses IRIG-B when enabled and operational, then failing that SNTP when configured and operational, and otherwise it free-runs unless the clock is changed from the front panel or from communications protocols.

Setup for IRIG-B is illustrated in the Installation chapter.

For the Other protocols, whenever a time synchronization message is received through any of the active protocols, the L90 clock updates. However, given that IEC 60870-5-103, IEC 60870-5-104, Modbus, and DNP are low-accuracy time synchronization methods, avoid their use for synchronization when better accuracy time protocols, such as IRIG-B and PTP, are active in the system. If IRIG-B or PTP is used to update the relay clock, the other protocols (such as SNTP) are not allowed to update, even if active.

See the **COMMANDS ⇨ SET DATE AND TIME** menu section of this manual to manually set the RTC.

The **REAL TIME CLOCK EVENTS** setting allows changes to the date and/or time to be captured in the event record. The event records the RTC time before the adjustment. A Date/Time Changed event is generated when:

- The real time clock changed from SNTP/PTP/IRIG-B and the time difference is more than one second
- The real time clock changed from the front panel or via Modbus register. The relay always generates this event regardless of the time difference.
- The Daylight Saving Time (DST) setting gets enabled and the current relay time is already in the DST zone
- The real time clock enters or leaves DST

To enable IRIG-B synchronization, the input **IRIG-B SIGNAL TYPE** must be set to DC Shift or Amplitude Modulated. IRIG-B synchronization can be disabled by making this setting None. When IRIG-B is enabled and active, clock synchronization by communication protocols. (DNP, IEC 60870-5-103, IEC 60870-5-104) is blocked, and clock synchronization from the front panel and over Modbus is always enabled.

Clocks can be synchronized locally among several relays using the computer time. When using a time source, such as IRIG-B, the time is overwritten eventually by the time source. To synchronize clocks among UR devices:

1. In the EnerVista software, expand the main menu in the Online Window area and select the **Synchronize Devices** entry. The window opens. The software prompts to acknowledge any offline devices.
2. Click the **Synchronize Devices** button at the top of the window, and confirm the action at the prompt. The devices assume the time of the computer being used.

To configure and enable PTP and/or SNTP, or to set local time parameters (for example time zone, daylight savings), use the following sections.

5.3.7.2 Precision time protocol (1588)

SETTINGS ⇨ PRODUCT SETUP ⇨⇩ REAL TIME CLOCK ⇨⇩ PRECISION TIME PROTOCOL (1588)

■ **PRECISION TIME PROTOCOL (1588)**	⇔	**STRICT POWER PROFILE: Disabled**	Range: Enabled, Disabled
	⇩	**PTP DOMAIN NUMBER: 0**	Range: 0 to 255

⇕	**PTP VLAN PRIORITY:** **4**	Range: 0 to 7
⇕	**PTP VLAN ID:** **0**	Range: 0 to 4095
⇧	■ **PTP PORT 1** ■	See below

SETTINGS ⇨ PRODUCT SETUP ⇨⇩ REAL TIME CLOCK ⇨⇩ PRECISION TIME PROTOCOL (1588) ⇨⇩ PTP PORT 1(3)

■ **PTP PORT 1** ■	⇕	**PORT 1 PTP FUNCTION:** **Disabled**	Range: Enabled, Disabled
	⇕	**PORT 1 PATH DELAY ADDER: 0 ns**	Range: 0 to 60000 ns in steps of 1
	⇧	**PORT 1 PATH DELAY ASYMMETRY: 0 ns**	Range: –1000 to +1000 ns in steps of 1

SOFTWARE OPTION

The L90 is provided with optional Precision Time Protocol capability. This feature is specified as the IEEE 1588 software option at the time of ordering. See the Order Codes section in chapter 2 for details.

The L90 supports the Precision Time Protocol (PTP) specified in IEEE Std 1588 2008 using the Power Profile (PP) specified in IEEE Std C37.238 2011. This enables the relay to synchronize to the international time standard over an Ethernet network that implements PP.

The relay can be configured to operate on some PTP networks that are not strictly PP. Time accuracy can be less than specified for a PP network. Tolerated deviations from strict PP include 1) missing declaration of PP compliance in the messages, 2) connection to a network device that does not support the PTP peer delay mechanism, 3) jitter substantially greater than 1 µs in received event messages, and 4) certain non-compliant announce and sync message update rates.

The relay implements PTP according to IEEE Std 1588 2008 and the equivalent IEC 61588:2009(E), sometimes referred to as version 2 PTP. It does not support the previous version of the standard (version 1).

PTP is a protocol that allows multiple clocks in a network to synchronize with one another. It permits synchronization accuracies better than 1 ns, but this requires that each and every component in the network achieve very high levels of accuracy and a very high baud rate, faster than normally used for relay communications. When operating over a generic Ethernet network, time error can amount to 1 ms or more. PP is a profile of PTP which specifies a limited subset of PTP suitable for use in power system protection, control, automation, and data communication applications, and thereby facilitates interoperability between different vendor's clocks and switches. PP specifies a worst-case delivered time error of less than 1 µs over a 16-hop network.

In a PTP system and in a PP system, the clocks automatically organize themselves into a master-slave synchronization hierarchy with the "best" clock available making itself the "grandmaster" at the top of the hierarchy; all others make themselves "slaves" and track the grandmaster. Typically the grandmaster clock receives its time from GPS satellites or some other link to the international time standard. If the grandmaster fails, the next "best" clock available in the domain assumes the grandmaster role. When a clock on start-up discovers that it is "better" than the present grandmaster, it assumes the grandmaster role and the previous grandmaster reverts to slave. The L90 qualification mechanism accepts a potential master clock as a new grandmaster, when in a four-second interval it has received three announce messages from it, all better than the present grandmaster clock and better than any other announce in this interval.

Time messages issued by the grandmaster are delayed as they pass through the network both due to the finite speed of the signal in the interconnecting fiber or wire, and due to processing delays in the Ethernet switches. Each clock and switch implementing PP measures the propagation delay to each of its PP neighbors, and compensates for these delays in the time received. Each network device implementing PP measures the processing delay it introduces in each time message and compensates for this delay in the time it transmits. As a result, the time delivered to end-devices such as the UR are virtually identical to the grandmaster time. If one of the network devices in the hierarchy does not fully implement PP, the associated propagation delay and/or latency may not be compensated for, and the time received at the end-device can be in error by more than 100 µs.

See the preceding Real Time Clock section for a description of when time values received via PTP are used to update the relay's real time clock.

The following settings are available for configuring the relay for PTP. The PTP menu displays only when the option was purchased.

STRICT POWER PROFILE — Power profile (IEEE Std C37.238 2011) requires that the relay only select a power profile compliant clock as a grandmaster, that the delivered time have worst-case error of ±1 µs, and that the peer delay mechanism be implemented. With the strict power profile setting enabled, the relay only selects as master the clocks displaying the IEEE_C37_238 identification codes. It uses a port only when the peer delay mechanism is operational. With the strict power profile setting disabled, the relay uses clocks without the power profile identification when no power profile clocks are present, and uses ports even if the peer delay mechanism is non-operational. This setting applies to all of the relay's PTP capable ports.

PTP DOMAIN NUMBER — Set this setting to the domain number of the grandmaster-capable clock(s) to be synchronized to. A network can support multiple time distribution domains, each distinguished with a unique domain number. More commonly, there is a single domain using the default domain number zero.

This setting applies to all of the relay's PTP capable ports.

PTP VLAN PRIORITY — This setting selects the value of the priority field in the 802.1Q VLAN tag in request messages issued by the relay's peer delay mechanism. In compliance with PP the default VLAN priority is 4, but it is recommended that it be set to 7 in accordance with PTP. Depending on the characteristics of the device to which the relay is linked directly, VLAN Priority can have no effect.

This setting applies to all of the relay's PTP capable ports.

PTP VLAN ID — This setting selects the value of the ID field in the 802.1Q VLAN tag in request messages issued by the relay's peer delay mechanism. It is provided in compliance with PP. As these messages have a destination address that indicates they are not to be bridged, their VLAN ID serves no function, and so can be left at its default value. Depending on the characteristics of the device to which the relay is linked directly, VLAN ID can have no effect. This setting applies to all of the relay's PTP capable ports.

PORT 1 ... 3 FUNCTION — While this port setting is selected to disabled, PTP is disabled on this port. The relay does not generate or listen to PTP messages on this port.

PORT 1 ... 3 PATH DELAY ADDER — The time delivered by PTP is advanced by the time value in this setting prior to the time being used to synchronize the relay's real time clock. This is to compensate to the extent practical for time delivery delays not compensated for in the network. In a fully compliant PP network, the peer delay and the processing delay mechanisms compensate for all the delays between the grandmaster and the relay. In such networks, make this setting zero.

In networks containing one or more switches and/or clocks that do not implement both of these mechanisms, not all delays are compensated, so the time of message arrival at the relay is later than the time indicated in the message. This setting can be used to approximately compensate for this delay. However, as the relay is not aware of network switching that dynamically changes the amount of uncompensated delay, there is no setting that always and completely corrects for uncompensated delay. A setting can be chosen that reduces the worst-case error to half of the range between minimum and maximum uncompensated delay, if these values are known.

PORT 1 ... 3 PATH DELAY ASSYMMETRY — This setting corresponds to "delayAsymmetry" in PTP, which is used by the peer delay mechanism to compensate for any difference in the propagation delay between the two directions of a link. Except in unusual cases, the two fibers are of essentially identical length and composition, so make this setting zero.

In unusual cases where the length of the link is different in different directions, set this setting to the number of nanoseconds the Ethernet propagation delay to the relay is longer than the mean of path propagation delays to and from the relay. For instance, if it is known say from the physical length of the fibers and the propagation speed in the fibers that the delay from the relay to the Ethernet switch it is connected to is 9000 ns and that the delay from the switch to the relay is 11000 ns, then the mean delay is 10000 ns, and the path delay asymmetry is 11000 - 10000 = +1000 ns.

5.3.7.3 SNTP protocol

SETTINGS ⇨ PRODUCT SETUP ⇨⇩ REAL TIME CLOCK ⇨⇩ SNTP PROTOCOL

■ **SNTP PROTOCOL** ■	⇔	**SNTP FUNCTION:** **Disabled**	Range: Enabled, Disabled

⇕	**SNTP SERVER IP ADDR: 0.0.0.0**	Range: standard IP address format
⇧	**SNTP UDP PORT NUMBER: 123**	Range: 1 to 65535 in steps of 1

The L90 supports the Simple Network Time Protocol specified in RFC-2030. With SNTP, the L90 can obtain clock time over an Ethernet network. The L90 acts as an SNTP client to receive time values from an SNTP/NTP server, usually a dedicated product using a GPS receiver. UR family relays support unicast, broadcast, multicast, and anycast SNTP functionality.

The **SNTP FUNCTION** setting enables or disables the SNTP feature on the L90.

To use SNTP in unicast mode, set **SNTP SERVER IP ADDR** to the SNTP/NTP server IP address. Once this address is set and **SNTP FUNCTION** is "Enabled," the L90 attempts to obtain time values from the SNTP/NTP server. Since many time values are obtained and averaged, it generally takes three to four minutes until the L90 clock is closely synchronized with the SNTP/NTP server. It takes up to two minutes for the L90 to signal an SNTP self-test error if the server is offline.

To use SNTP in broadcast mode, set the **SNTP SERVER IP ADDR** setting to "0.0.0.0" and **SNTP FUNCTION** to "Enabled." The L90 then listens to SNTP messages sent to the "all ones" broadcast address for the subnet. The L90 waits up to 18 minutes (>1024 seconds) without receiving an SNTP broadcast message before signaling an SNTP self-test error.

The **SNTP UDP PORT NUMBER** is 123 for normal SNTP operation. The change takes effect when the L90 is restarted.

After enabling and waiting for the synchronization, verify that there is no SNTP Failure message in the Event Records.

NOTE

Do not set more than one protocol to the same TCP/UDP port number, as this results in unreliable operation of those protocols.

5

5.3.7.4 Local time

SETTINGS ⇨ PRODUCT SETUP ⇨⇩ REAL TIME CLOCK ⇨⇩ LOCAL TIME

■ **LOCAL TIME** ■	⇔	**LOCAL TIME OFFSET FROM UTC: 0.0 hr**	Range: –24.0 to 24.0 hr in steps of 0.5
	⇕	**DAYLIGHT SAVINGS TIME: Disabled**	Range: Disabled, Enabled
	⇕	**DST START MONTH: January**	Range: January to December (all months)
	⇕	**DST START DAY: Sunday**	Range: Sunday to Saturday (all days of the week)
	⇕	**DST START DAY INSTANCE: First**	Range: First, Second, Third, Fourth, Last
	⇕	**DST START HOUR: 2:00**	Range: 0:00 to 23:00 in steps of one hour
	⇕	**DST STOP MONTH: January**	Range: January to December (all months)
	⇕	**DST STOP DAY: Sunday**	Range: Sunday to Saturday (all days of the week)
	⇕	**DST STOP DAY INSTANCE: First**	Range: First, Second, Third, Fourth, Last
	⇧	**DST STOP HOUR: 2:00**	Range: 0:00 to 23:00 in steps of one hour

The L90 maintains two times: local time and Universal Coordinated Time (UTC). Local time can be provided by IRIG-B signals. UTC time is provided by SNTP servers.

The real-time clock (RTC) and time stamps reported in historical records and communication protocols can be incorrect if the Local Time settings are not configured properly.

See the IRIG-B section in the Installation chapter for guidance on these settings when using an IRIG-B source that sets the IRIG-B control bits according to IEEE Std 1344-1995.

LOCAL TIME OFFSET FROM UTC — Used to specify the local time zone offset from UTC (Greenwich Mean Time) in hours. Time zones in the eastern hemisphere have positive values; time zones in the western hemisphere have negative values. A value of zero causes the relay to use UTC for local time. This setting has two uses. When the system RTC is synchronized with a communications protocol providing only local time or it is free-running, the offset setting is used to calculate UTC from the local time these provide. When the RTC is synchronized with a communications protocol providing only UTC (such as PTP or SNTP), the time offset setting is used to determine local time from the UTC provided. PTP ALTERNATE_TIME_OFFSET_INDICATOR TLVs are not used to calculate local time.

DAYLIGHT SAVINGS TIME and **DST** — Can be used to allow the relay to follow the DST rules of the local time zone. Note that when IRIG-B time synchronization is active, the local time in the IRIG-B signal contains any daylight savings time offset and so the DST settings are ignored. Note that the following items do not include the DST: Time of Day Timer Start Time; Time of Day Timer Stop Time; Event Recorder Last Cleared Date; Source x Demand VAR Maximum Date; Source x Demand WATT Maximum Date; Source x Demand VA Maximum Date; Source x Demand Ia Maximum Date; Source x Demand Ib Maximum Date; Source x Demand Ic Maximum Date; PMU x Last Cleared Date; PMU One-Shot Time; Data Logger Newest Time; Data Logger Oldest Time; Oscillography Last Cleared Date; Last Settings Change Date; User Programmable Fault Report Cleared Date; Digital Counter x Frozen Time Stamp; HIZ RMS Capture x Time; and HIZ Capture x Time.

5.3.8 Fault reports

SETTINGS ⇨⇩ PRODUCT SETUP ⇨⇩ FAULT REPORTS ⇨⇩ FAULT REPORT 1(4)

■ **FAULT REPORT 1** ■	⇔	**FAULT REPORT 1 SOURCE: SRC 1**	Range: SRC 1, SRC 2, SRC 3, SRC 4
	⇩	**FAULT REPORT 1 TRIG: Off**	Range: FlexLogic operand
	⇩	**FAULT REPORT 1 Z1 MAG: 3.00 Ω**	Range: 0.01 to 250.00 ohms in steps of 0.01
	⇩	**FAULT REPORT 1 Z1 ANGLE: 75°**	Range: 25 to 90° in steps of 1
	⇩	**FAULT REPORT 1 Z0 MAG: 9.00 Ω**	Range: 0.01 to 650.00 ohms in steps of 0.01
	⇩	**FAULT REPORT 1 Z0 ANGLE: 75°**	Range: 25 to 90° in steps of 1
	⇩	**FAULT REPORT 1 Z0M MAG: 0.00 Ω**	Range: 0.00 to 650.00 ohms in steps of 0.01
	⇩	**FAULT REPORT 1 Z0M ANGLE: 75°**	Range: 25 to 90° in steps of 1
	⇩	**FAULT REPORT 1 LINE LENGTH UNITS: km**	Range: km, miles
	⇩	**FAULT REP 1 LENGTH (km): 100.0**	Range: 0.0 to 2000.0 in steps of 0.1
	⇩	**FAULT REP 1 REM1-TAP Z1 MAG: 3.00 Ω**	Range: 0.01 to 250.00 ohms in steps of 0.01
	⇩	**FAULT REP 1 REM1-TAP Z1 ANG: 75°**	Range: 25 to 90° in steps of 1
	⇩	**FAULT REP 1 REM1-TAP LENGTH (km): 100.0**	Range: 0.0 to 2000.0 in steps of 0.1
	⇩	**FAULT REP 1 REM2-TAP Z1 MAG: 3.00 Ω**	Range: 0.01 to 250.00 ohms in steps of 0.01

⇕	**FAULT REP 1 REM2-TAP Z1 ANG: 75°**	Range: 25 to 90° in steps of 1
⇕	**FAULT REP 1 REM2-TAP LENGTH (km): 100.0**	Range: 0.0 to 2000.0 in steps of 0.1
⇕	**FAULT REPORT 1 VT SUBSTITUTION: None**	Range: None, I0, V0
⇕	**FAULT REP 1 SYSTEM Z0 MAG: 2.00 Ω**	Range: 0.01 to 650.00 ohms in steps of 0.01
⇕	**FAULT REP 1 SYSTEM Z0 ANGLE: 75°**	Range: 25 to 90° in steps of 1
⇧	**FAULT REPORT 1 Z0M MAG: 0.00 Ω**	Range: 0.00 to 650.00 ohms in steps of 0.01

The L90 incorporates a multi-ended fault locator method based on the synchronized voltage and current measurements at all ends of the transmission line. This makes it possible to compute the fault location without assumptions or approximations. This fault locator method is applicable on both two-terminal and three-terminal applications, with results computed independently at each terminal. For three-terminal line applications, the fault locator is reports the exact line segment at which the fault occurred and the distance to the fault from the terminal adjacent to the fault.

if charging current compensation is configured and enabled, the line charging current is removed at each terminal for improved accuracy.

During communication channel failures, the L90 uses the single-ended algorithm to calculate and report fault location. When the single-ended algorithm is used for three-terminal line applications, the faulted segment of the line is not determined and reported.

5

The L90 relay supports one fault report and an associated fault locator per CT bank to a maximum of four. The signal source and trigger condition, as well as the characteristics of the line or feeder, are entered in this menu.

The fault report stores data, in non-volatile memory, pertinent to an event when triggered. The captured data contained in the FaultReport.txt file includes:

- Fault report number
- Name of the relay, programmed by the user
- Firmware revision of the relay
- Date and time of trigger
- Name of trigger (specific operand)
- Line or feeder ID via the name of a configured signal source
- Active setting group at the time of trigger
- Pre-fault current and voltage phasors (two cycles before either a 50DD disturbance associated with fault report source or the trigger operate). Once a disturbance is detected, pre-fault phasors hold for three seconds waiting for the fault report trigger. If trigger does not occur within this time, the values are cleared to prepare for the next disturbance.
- Fault current and voltage phasors (one cycle after the trigger)
- Elements operated at the time of triggering
- Events — Nine before trigger and seven after trigger (only available via the relay web page)
- Fault duration times for each breaker (created by the breaker arcing current feature)

The captured data also includes the fault type, the distance to the fault location, distance to the fault location, fault loop impedance, as well as the reclose shot number (when applicable). To include fault duration times in the fault report, enable and configure the breaker arcing current feature for each of the breakers. Fault duration is reported on a per-phase basis.

The relay allows locating faults, including ground faults, from delta-connected VTs. In this case, the missing zero-sequence voltage is substituted either by the externally provided neutral voltage (broken delta VT) connected to the auxiliary voltage channel of a VT bank, or by the zero-sequence voltage approximated as a voltage drop developed by the zero-sequence current, and user-provided zero-sequence equivalent impedance of the system behind the relay.

The trigger can be any FlexLogic operand, but in most applications it is expected to be the same operand, usually a virtual output, that is used to drive an output relay to trip a breaker. To prevent the overwriting of fault events, do not use the disturbance detector to trigger a fault report. A FAULT RPT TRIG event is automatically created when the report is triggered.

If a number of protection elements are ORed to create a fault report trigger, the first operation of any element causing the OR gate output to become high triggers a fault report. However, If other elements operate during the fault and the first operated element has not been reset (the OR gate output is still high), the fault report is not triggered again. Considering the reset time of protection elements, there is very little chance that a fault report can be triggered twice in this manner. As the fault report must capture a usable amount of pre and post-fault data, it cannot be triggered faster than every 20 ms.

Each fault report is stored as a file; the relay capacity is 15 files. A 16th trigger overwrites the oldest file.

Individual fault report features store their files in the same memory space. The sixteenth report overwrites the first one regardless of which fault report feature produced the sixteenth and the first records.

The EnerVista software is required to view all captured data. The relay faceplate display can be used to view the date and time of trigger, the fault type, the distance location of the fault, and the reclose shot number.

The **FAULT REPORT 1 SOURCE** setting selects the source for input currents and voltages and disturbance detection. For dual-breaker applications where the line current is supplied individually from two breaker CTs, the fault locator source should include the sum of currents from both CTs as well as the line voltage. For the application of entirely parallel lines, the fault report can be programmed to apply compensation for the zero sequence mutual coupling between parallel lines when calculating fault resistance and fault loop impedance. If this compensation is required, the ground current (3I_0) from the parallel line must be connected to the ground input CT of the CT bank configured under the **FAULT REPORT 1 SOURCE** with the same polarity as the phase current input configured in the same source.

The **FAULT 1 REPORT TRIG** setting assigns the FlexLogic operand representing the protection element/elements requiring operational fault location calculations. The distance to fault calculations are initiated by this signal. The **FAULT REPORT 1 Z1 MAG**, **FAULT REPORT 1 Z0 MAG**, and **FAULT REPORT 1 Z0M MAG** impedances are entered in secondary ohms.

For a two-terminal line application, the **FAULT REPORT 1 Z1 MAG**, **FAULT REPORT 1 Z1 ANG**, **FAULT REPORT 1 Z0 MAG**, **FAULT REPORT 1 Z0 ANG** and **FAULT REPORT 1 LENGTH** settings for the entire line must to be entered for fault location calculations. For the application of entirely parallel lines, Z0M MAG/ANG is the mutual zero-sequence impedance for the whole line, required to compensate the calculation of fault resistance and fault loop impedance. For a three-terminal application, these settings are used to enter the line segment impedance and length from the local terminal to the tap point only. The figure shows the supported configurations of parallel lines in three-terminal applications.

Figure 5-49: Supported configurations of parallel lines in three-terminal applications

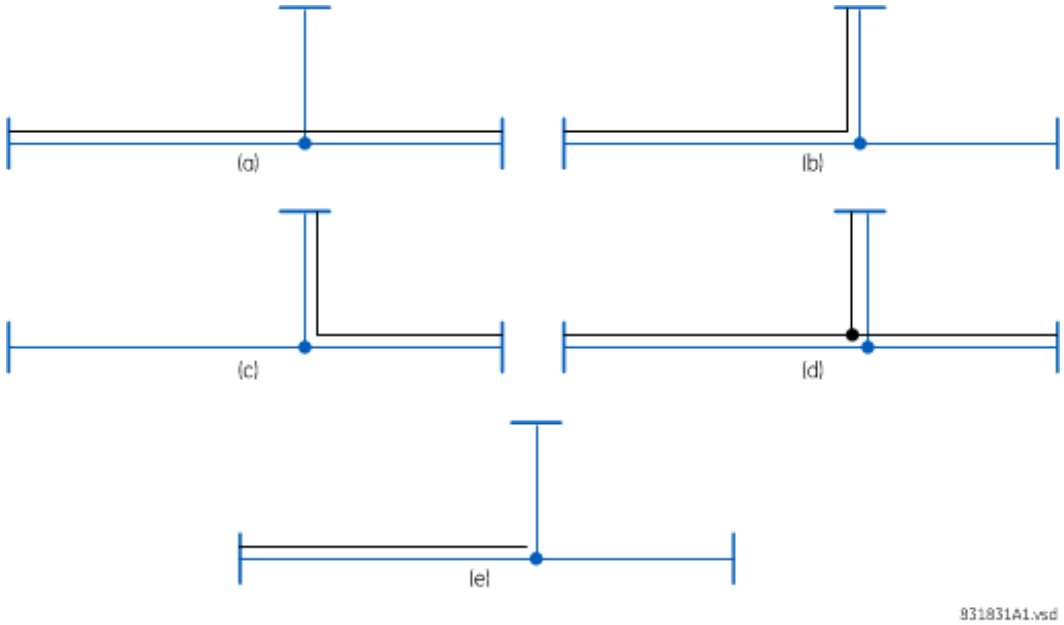

The **FAULT REP 1 REM1-TAP Z1 MAG** and **FAULT REP 1 REM1-TAP Z1 ANG** settings are used for three-terminal applications to enter positive sequence section impedances (in secondary ohms) for the line segment from remote terminal 1 to the tap point. The length of the line section from remote terminal 1 to the tap point is entered in the **FAULT REP 1 REM1-TAP LENGTH** setting.

The **FAULT REP 1 REM2-TAP Z1 MAG**, **FAULT REP 1 REM2-TAP Z1 ANG**, and **FAULT REP 1 REM2-TAP LENGTH** settings are used as above, but for the line segment from remote terminal 2 to the tap point.

The **FAULT REPORT 1 VT SUBSTITUTION** setting is set to "None" if the relay is fed from wye-connected VTs. If delta-connected VTs are used, and the relay is supplied with the neutral (3V0) voltage, this setting is set to "V0". The method is still exact, as the fault locator combines the line-to-line voltage measurements with the neutral voltage measurement to re-create the line-to-ground voltages. See the **ACTUAL VALUES ⇨⇩ RECORDS ⇨ FAULT REPORTS** menu for details. It is required to configure the delta and neutral voltages under the source indicated as input for the fault report. Also, the relay checks if the auxiliary signal configured is marked as "Vn" by the user (under VT setup) and inhibits the fault location if the auxiliary signal is labeled differently.

If the broken-delta neutral voltage is not available to the relay, an approximation is possible by assuming the missing zero-sequence voltage to be an inverted voltage drop produced by the zero-sequence current and the user-specified equivalent zero-sequence system impedance behind the relay: $V0 = -Z0 \times I0$. In order to enable this mode of operation, the **FAULT REPORT 1 VT SUBSTITUTION** setting is set to "I0".

The **FAULT REP 1 SYSTEM Z0 MAG** and **FAULT REP 1 SYSTEM Z0 ANGLE** settings are used only when the **VT SUBSTITUTION** setting value is "I0". The magnitude is to be entered in secondary ohms. This impedance is an average system equivalent behind the relay. It can be calculated as zero-sequence Thevenin impedance at the local bus with the protected line/feeder disconnected. The method is accurate only if this setting matches perfectly the actual system impedance during the fault. If the system exhibits too much variability, this approach is questionable and the fault location results for single-line-to-ground faults is trusted accordingly. Keep in mind that grounding points in the vicinity of the installation impact the system zero-sequence impedance (grounded loads, reactors, zig-zag transformers, shunt capacitor banks, and so on).

5

NOTE For proper operation of the multi-ended fault locator, the nominal primary voltage is expected to appear identical at all line terminals as seen from the nominal secondary voltage, VT ratio, and VT connection settings of the first 87L source.

5.3.9 Oscillography

5.3.9.1 Menu

SETTINGS ⇨ PRODUCT SETUP ⇨⇩ OSCILLOGRAPHY

■ OSCILLOGRAPHY ■	⇔	NUMBER OF RECORDS: 15	Range: 3 to 64 in steps of 1
	⇩	TRIGGER MODE: Automatic Overwrite	Range: Automatic Overwrite, Protected
	⇩	TRIGGER POSITION: 50%	Range: 0 to 100% in steps of 1
	⇩	TRIGGER SOURCE: Off	Range: FlexLogic operand
	⇩	AC INPUT WAVEFORMS: 16 samples/cycle	Range: Off; 8, 16, 32, 64 samples/cycle
	⇩	■ DIGITAL CHANNELS ■	See below
	⇧	■ ANALOG CHANNELS ■	See below

Oscillography records contain waveforms captured at the sampling rate as well as other relay data at the point of trigger. Oscillography records are triggered by a programmable FlexLogic operand. Multiple oscillography records can be captured simultaneously.

When EnerVista UR Setup creates a new settings file, a Smart defaults feature automatically enters a basic oscillography configuration. The basic configuration changes the factory default values to make the number of samples per cycle 32, adds a selection of digital and analog channels that are often of interest, and adds a FlexLogic equation to trigger oscillography. Review and update this basic configuration as required for the application at hand.

The **NUMBER OF RECORDS** is selectable, but the number of cycles captured in a single record varies considerably based on other factors, such as sample rate and the number of operational modules. There is a fixed amount of data storage for oscillography; the more data captured, the less the number of cycles captured per record. See the **ACTUAL VALUES ⇨⇩ RECORDS ⇨⇩ OSCILLOGRAPHY** menu to view the number of cycles captured per record. The following table provides sample configurations with corresponding cycles/record. The minimum number of oscillographic records is three.

Table 5-13: Oscillography cycles/record example

Records	CT/VTs	Sample rate	Digital channels	Analog channels	Cycles per record
3	1	32	32	16	2399
3	1	64	32	16	1450
16	1	32	32	16	666
16	1	64	32	16	402
32	1	32	32	16	352
32	1	64	32	16	213
3	2	32	32	16	1516
3	2	64	32	16	851
16	2	32	32	16	421

TRIGGER MODE — A new record automatically overwrites an older record when **TRIGGER MODE** is set to "Automatic Overwrite."

TRIGGER POSITION — Set this to a percentage of the total buffer size (for example, 10%, 50%, 75%, and so on). A trigger position of 25% consists of 25% pre- and 75% post-trigger data.

TRIGGER SOURCE — Always captured in oscillography and can be any FlexLogic parameter (element state, contact input, virtual output, and so on). The relay sampling rate is 64 samples per cycle.

AC INPUT WAVEFORMS — Determines the sampling rate at which AC input signals (that is, current and voltage) are stored. Reducing the sampling rate allows longer records to be stored. This setting has no effect on the internal sampling rate of the relay, which is always 64 samples per cycle. That is, it has no effect on the fundamental calculations of the device.

NOTE

When changes are made to the oscillography settings, all existing oscillography records are cleared.

5.3.9.2 Digital channels

SETTINGS ⇨ PRODUCT SETUP ⇨⇩ OSCILLOGRAPHY ⇨⇩ DIGITAL CHANNELS

```
■ DIGITAL CHANNELS        ⇔   DIGITAL CHANNEL  1:        Range:   FlexLogic operand
■                             Off
                                  ⇩
                          ⇧   DIGITAL CHANNEL 63:        Range:   FlexLogic operand
                              Off
```

DIGITAL 1(63) CHANNEL — This setting selects the FlexLogic operand state recorded in an oscillography trace. The length of each oscillography trace depends in part on the number of parameters selected here. Parameters set to "Off" are ignored.

To populate quickly the rows in the Offline Window, use Ctrl C/V to copy/paste, or click then double-click a row to display a quick selection window.

Figure 5-50: Quick selection window

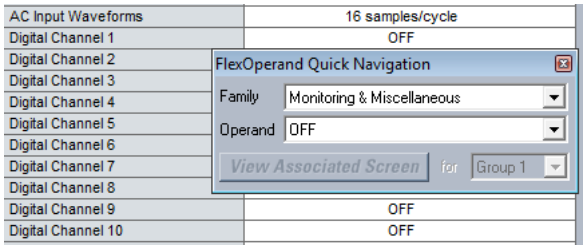

5.3.9.3 Analog channels

SETTINGS ⇨ PRODUCT SETUP ⇨⇩ OSCILLOGRAPHY ⇨⇩ ANALOG CHANNELS

■ ANALOG CHANNELS ■	⇔	ANALOG CHANNEL 1: Off	Range: Off, any FlexAnalog/actual value parameter See Appendix A for list
		⇩	
	⇧	ANALOG CHANNEL 16: Off	Range: Off, any FlexAnalog/actual value parameter See Appendix A for list

These settings select the metering actual value recorded in an oscillography trace. The length of each oscillography trace depends in part on the number of parameters selected here. Parameters set to "Off" are ignored. The parameters available in a given relay depend on

- the type of relay,
- the type and number of CT/VT hardware modules installed, and
- the type and number of analog input hardware modules installed

A list of all possible analog metering actual value parameters is presented in Appendix A: FlexAnalog Parameters. The parameter index number shown in any of the tables is used to expedite the selection of the parameter on the relay display. It can be time-consuming to scan through the list of parameters via the relay keypad and display — entering this number via the relay keypad causes the corresponding parameter to display.

All eight CT/VT module channels are stored in the oscillography file. The CT/VT module channels are named as follows:

<slot_letter><terminal_number>—<I or *V><phase A, B*, or *C*, or *4th input>*

The fourth current input in a bank is called IG, and the fourth voltage input in a bank is called VX. For example, F2-IB designates the IB signal on terminal 2 of the CT/VT module in slot F.

If there are no CT/VT modules and analog input modules, no analog traces appear in the file; only the digital traces appear.

5.3.10 Data logger

SETTINGS ⇨⇩ PRODUCT SETUP ⇨⇩ DATA LOGGER

■ DATA LOGGER ■	⇔	DATA LOGGER MODE: Continuous	Range: Continuous, Trigger
	⇩	DATA LOGGER TRIGGER: Off	Range: FlexLogic operand
	⇩	DATA LOGGER RATE: 60000 msec	Range: 15 to 3600000 ms in steps of 1
	⇩	DATA LOGGER CHNL 1: Off	Range: Off, any FlexAnalog/actual value parameter See Appendix A for list
		⇩	
	⇩	DATA LOGGER CHNL 16: Off	Range: Off, any FlexAnalog/actual value parameter See Appendix A for list

⇧ **DATA LOGGER CONFIG:**
0 CHNL x 0.0 DAYS

Range: Not applicable - shows computed data only

The data logger samples and records up to 16 analog parameters at a user-defined sampling rate. This recorded data can be downloaded to EnerVista UR Setup and displayed with parameters on the vertical axis and time on the horizontal axis. All data is stored in non-volatile memory, so the information is retained when power to the relay is lost.

For a fixed sampling rate, the data logger can be configured with a few channels over a long period or a larger number of channels for a shorter period. The relay automatically partitions the available memory between the channels in use. The following table outlines examples of storage capacities for a system frequency of 60 Hz.

Table 5-14: Data logger storage capacity example

Sampling rate	Channels	Days	Storage capacity
15 ms	1	0.1	482 s
	8	0.1	60 s
	9	0.1	54 s
	16	0.1	30 s
1000 ms	1	0.3	32729 s
	8	0.1	4091 s
	9	0.1	3637 s
	16	0.1	2046 s
60000 ms	1	22.7	1963710 s
	8	2.8	245460 s
	9	2.5	218190 s
	16	1.4	127230 s
3600000 ms	1	1362.1	117822600 s
	8	170.2	14727600 s
	9	151.3	13091400 s

NOTE

Changing any setting affecting data logger operation clears data in the log.

DATA LOGGER MODE — This setting configures the mode in which the data logger operates. When set to “Continuous,” the data logger actively records any configured channels at the rate as defined by the **DATA LOGGER RATE**. The data logger is idle in this mode when no channels are configured. When set to “Trigger,” the data logger records any configured channels at the instance of the rising edge of the **DATA LOGGER TRIGGER** source FlexLogic operand. The data logger ignores all subsequent triggers and continues to record data until the active record is full. Once the data logger is full, a CLEAR DATA LOGGER command is required to clear the data logger record before a new record can be started. Performing the CLEAR DATA LOGGER command also stops the current record and resets the data logger to be ready for the next trigger.

DATA LOGGER TRIGGER — This setting selects the signal used to trigger the start of a new data logger record. Any FlexLogic operand can be used as the trigger source. This setting only applies when the mode is set to “Trigger.”

DATA LOGGER RATE — This setting selects the time interval at which the actual value data is recorded.

DATA LOGGER CHNL 1(16) — This setting selects the metering actual value that is to be recorded in Channel 1(16) of the data log. The parameters available in a given relay are dependent on: the type of relay, the type and number of CT/VT hardware modules installed, and the type and number of Analog Input hardware modules installed. Upon startup, the relay automatically prepares the parameter list. A list of all possible analog metering actual value parameters is shown in Appendix A: FlexAnalog Parameters. The parameter index number shown in any of the tables is used to expedite the selection of the parameter on the relay display. It can be time-consuming to scan through the list of parameters via the relay keypad/display—entering this number via the relay keypad causes the corresponding parameter to display.

DATA LOGGER CONFIG — This display presents the total amount of time that the Data Logger can record the channels not selected to “Off” without overwriting old data.

5.3.11 Demand

SETTINGS ⇨⇩ PRODUCT SETUTP ⇨⇩ DEMAND

■ **DEMAND** ■	⇔	**CRNT DEMAND METHOD:** **Thermal Exponential**	Range: Thermal Exponential, Block Interval, Rolling Demand
	⇩	**POWER DEMAND METHOD:** **Thermal Exponential**	Range: Thermal Exponential, Block Interval, Rolling Demand
	⇩	**DEMAND INTERVAL:** **15 MIN**	Range: 5, 10, 15, 20, 30, 60 minutes
	⇧	**DEMAND TRIGGER:** **Off**	Range: FlexLogic operand Note: for calculation using method 2a

The relay measures current demand on each phase, and three-phase demand for real, reactive, and apparent power. Current and Power methods can be chosen separately for the convenience of the user. Settings are provided to allow the user to emulate common electrical utility demand measuring techniques, for statistical or control purposes. If the **CRNT DEMAND METHOD** is set to "Block Interval" and the **DEMAND TRIGGER** is set to "Off," Method 2 is used as follows. If **DEMAND TRIGGER** is assigned to any other FlexLogic operand, Method 2a is used as follows.

The relay can be set to calculate demand by any of the following three methods.

5.3.11.1 Calculation method 1: Thermal exponential

This method emulates the action of an analog peak-recording thermal demand meter. The relay measures the quantity (RMS current, real power, reactive power, or apparent power) on each phase every second and assumes that the circuit quantity remains at this value until updated by the next measurement. It calculates the 'thermal demand equivalent' based on the following equation:

$$d(t) = D(1 - e^{-kt}) \qquad \textbf{Eq. 5-6}$$

where

d = demand value after applying input quantity for time t (in minutes)
D = input quantity (constant)
k = 2.3 / thermal 90% response time

The figure shows the 90% thermal response time characteristic of 15 minutes. A setpoint establishes the time to reach 90% of a steady-state value, just as the response time of an analog instrument. A steady state value applied for twice the response time indicates 99% of the value.

Figure 5-51: Thermal demand characteristic

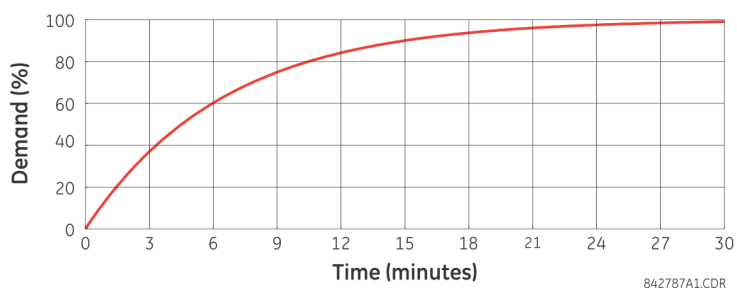

5.3.11.2 Calculation method 2: Block interval

This method calculates a linear average of the quantity (RMS current, real power, reactive power, or apparent power) over the programmed demand time interval, starting daily at 00:00:00 (that is, 12:00 am). The 1440 minutes per day is divided into the number of blocks as set by the programmed time interval. Each new value of demand becomes available at the end of each time interval.

5.3.11.3 Calculation method 2a: Block interval (with start demand interval logic trigger)

This method calculates a linear average of the quantity (RMS current, real power, reactive power, or apparent power) over the interval between successive Start Demand Interval logic input pulses. Each new value of demand becomes available at the end of each pulse. Assign a FlexLogic operand to the **DEMAND TRIGGER** setting to program the input for the new demand interval pulses.

NOTE

If no trigger is assigned in the **DEMAND TRIGGER** setting and the **CRNT DEMAND METHOD** is "Block Interval," use calculation method 2. If a trigger is assigned, the maximum allowed time between two trigger signals is 60 minutes. If no trigger signal appears within 60 minutes, demand calculations are performed and available, and the algorithm resets and starts the new cycle of calculations. The minimum required time for trigger contact closure is 20 µs.

5.3.11.4 Calculation method 3: Rolling demand

This method calculates a linear average of the quantity (RMS current, real power, reactive power, or apparent power) over the programmed demand time interval, in the same way as Block Interval. The value is updated every minute and indicates the demand over the time interval just preceding the time of update.

5.3.12 User-programmable LEDs

5.3.12.1 Menu - Enhanced and basic front panels

SETTINGS ⇨ PRODUCT SETUP ⇨⇩ USER-PROGRAMMABLE LEDS

■ USER-PROGRAMMABLE ■ LEDS	⇔	■ LED TEST ■	See below
	⇕	■ TRIP & ALARM LEDS ■	See page 5-126
	⇕	■ USER-PROGRAMMABLE ■ LED 1	See page 5-126
		⇩	
	⇧	■ USER-PROGRAMMABLE ■ LED 48	

5.3.12.2 Menu - Graphical front panel

SETTINGS ⇨ PRODUCT SETUP ⇨⇩ USER-PROGRAMMABLE LEDS

■ USER-PROGRAMMABLE ■ LEDS	⇔	■ LED TEST ■	See below
	⇕	■ TRIP & ALARM LEDS ■	See page 5-126
	⇕	■ EVENT CAUSE LED 1 ■	See page 5-127
		⇩	
	⇧	■ EVENT CAUSE LED 9 ■	

The LEDs can be customized to illuminate when a selected FlexLogic operand is in the logic 1 state. The trip and alarm LEDs can also be customized in a similar manner. To ensure correct functionality of all LEDs, an LED test feature is also provided.

5.3.12.3 LED test

SETTINGS ⇨ PRODUCT SETUP ⇨⇩ USER-PROGRAMMABLE LEDS ⇨ LED TEST

■ **LED TEST** ■	⇔	**LED TEST FUNCTION:** **Disabled**	Range: Disabled, Enabled
	⇧	**LED TEST CONTROL:** **Off**	Range: FlexLogic operand

When enabled, the LED test can be initiated from any digital input or user-programmable condition, such as a user-programmable pushbutton. The control operand is configured under the **LED TEST CONTROL** setting. The test covers all LEDs, including the LEDs of the optional user-programmable pushbuttons.

For the enhanced and basic front panels, the test consists of the following three stages:

1. All 62 LEDs on the relay are illuminated. This is a quick test to verify if any of the LEDs is “burned.” This stage lasts as long as the control input is on, up to a maximum of one minute. After one minute, the test ends.
2. All the LEDs are turned off, and then one LED at a time turns on for one second, then back off. The test routine starts at the top left panel, moving from the top to bottom of each LED column. This test checks for hardware failures that lead to more than one LED being turned on from a single logic point. This stage can be interrupted at any time.
3. All the LEDs are turned on. One LED at a time turns off for one second, then back on. The test routine starts at the top left panel moving from top to bottom of each column of the LEDs. This test checks for hardware failures that lead to more than one LED being turned off from a single logic point. This stage can be interrupted at any time.

For the graphical front panel, the test consists of the following stages:

1. All 22 LEDs on the relay are illuminated. This is a quick test to verify if any of the LEDs is "burned." This stage lasts as long as the control input is on, up to a maximum of one minute. After one minute, the test ends.
2. All the LEDs are turned off, and then one LED at a time turns on with the orange color for one second, then back off. The test routine starts at the top left panel, moving from the top to bottom for all 14 LEDs. Then the eight pushbutton LEDs are tested in the same manner. This test checks for hardware failures that lead to more than one LED being turned on from a single logic point. This stage can be interrupted at any time.
3. All the LEDs are turned on with the orange color. One LED at a time turns off for one second, then back on. The test routine starts at the top left panel moving from top to bottom for all 14 LEDs. Then the eight pushbutton LEDs are tested in the same manner. This test checks for hardware failures that lead to more than one LED being turned off from a single logic point. This stage can be interrupted at any time.
4. Additionally, stages 2 and 3 are repeated twice for the five device status LEDs and nine event cause LEDs, one time with green color on and the other with red color on.

When testing is in progress, the LEDs are controlled by the test sequence, rather than the protection, control, and monitoring features. However, the LED control mechanism accepts all the changes to LED states generated by the relay and stores the actual LED states (on or off) in memory. When the test completes, the LEDs reflect the actual state resulting from relay response during testing. The reset pushbutton does not clear any targets when the LED Test is in progress.

A dedicated FlexLogic operand, LED TEST IN PROGRESS, is set for the duration of the test. When the test sequence is initiated, the LED TEST INITIATED event is stored in the event recorder.

The entire test procedure is user-controlled. In particular, stage 1 can last as long as necessary, and stages 2 and 3 can be interrupted. The test responds to the position and rising edges of the control input defined by the **LED TEST CONTROL** setting. The control pulses must last at least 250 ms to take effect. The following diagram explains how the test is executed.

Figure 5-52: LED test sequence

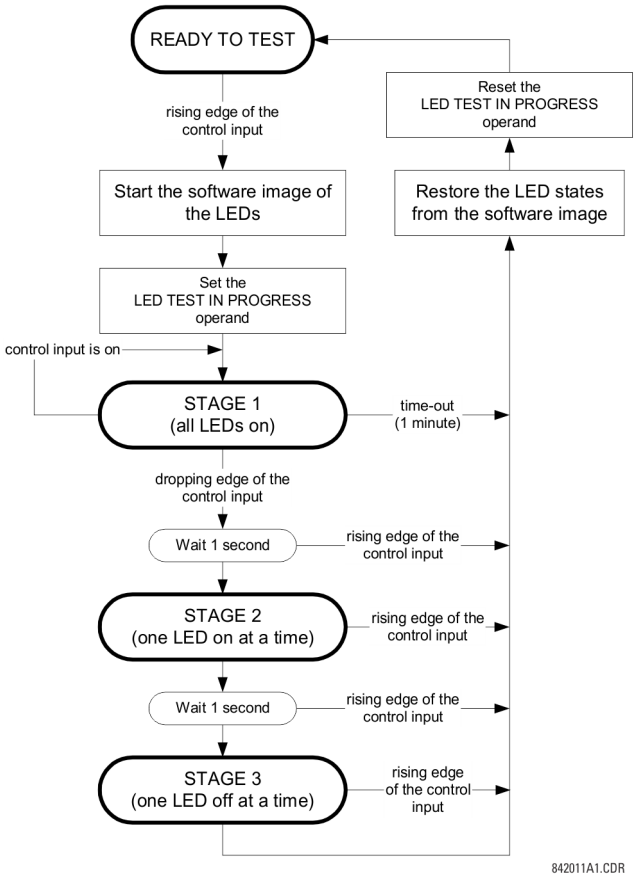

Application example 1

Assume one needs to check if any of the LEDs is "burned" through user-programmable pushbutton 1. Apply the following settings.

Configure user-programmable pushbutton 1 by making the following entries in the **SETTINGS ⇨ PRODUCT SETUP ⇨⇩ USER-PROGRAMMABLE PUSHBUTTONS ⇨ USER PUSHBUTTON 1** menu. (The option does not display when not purchased.)

PUSHBUTTON 1 FUNCTION: "Self-reset"
PUSHBTN 1 DROP-OUT TIME: "0.10 s"

Configure the LED test to recognize user-programmable pushbutton 1 by making the following entries in the **SETTINGS ⇨ PRODUCT SETUP ⇨⇩ USER-PROGRAMMABLE LEDS ⇨ LED TEST** menu:

LED TEST FUNCTION: "Enabled"
LED TEST CONTROL: "PUSHBUTTON 1 ON"

The test is initiated when the user-programmable pushbutton 1 is pressed. Keep the pushbutton pressed for as long as the LEDs are being visually inspected. When finished, release the pushbutton. The relay then automatically starts stage 2. At this point, test can be cancelled by pressing the pushbutton.

Application example 2

Assume one needs to check if any LEDs are "burned" as well as exercise one LED at a time to check for other failures. This is to be performed via user-programmable pushbutton 1.

After applying the settings in application example 1, hold down the pushbutton as long as necessary to test all LEDs. When finished, release the pushbutton so that the relay then automatically starts stage 2. When stage 2 is completed, stage 3 starts automatically. The test can be cancelled at any time by pressing the pushbutton.

5.3.12.4 Trip and alarm LEDs

SETTINGS ⇨ PRODUCT SETUP ⇨⇩ USER-PROGRAMMABLE LEDS ⇨⇩ TRIP & ALARMS LEDS

■ TRIP & ALARM LEDS ■	⇔	TRIP LED INPUT: Off	Range: FlexLogic operand
	⇩	ALARM LED INPUT: Off	Range: FlexLogic operand

The trip and alarm LEDs are in the first LED column (enhanced and graphical front panels) and on LED panel 1 (basic front panel). Each LED can be programmed to turn on when the selected FlexLogic operand is in the logic 1 state.

5.3.12.5 User-programmable LED 1(48)

SETTINGS ⇨ PRODUCT SETUP ⇨⇩ USER-PROGRAMMABLE LEDS ⇨⇩ USER-PROGRAMMABLE LED 1(48)

■ USER-PROGRAMMABLE ■ LED 1	⇔	LED 1 OPERAND: Off	Range: FlexLogic operand
	⇧	LED 1 TYPE: Self-Reset	Range: Self-Reset, Latched

For the enhanced and basic front panels, there are 48 amber LEDs across the relay LED panels. Each of these indicators can be programmed to illuminate when the selected FlexLogic operand is in the logic 1 state.

For the basic front panel, the LEDs are located as follows:

- LED Panel 2 — User-programmable LEDs 1 through 24
- LED Panel 3 — User programmable LEDs 25 through 48

For the enhanced front panel, the LEDs are located as follows:

- LED column 2 — User-programmable LEDs 1 through 12
- LED column 3 — User-programmable LEDs 13 through 24
- LED column 4 — User-programmable LEDs 25 through 36
- LED column 5 — User-programmable LEDs 37 through 48

See the LED Indicators section in chapter 4 for information on the location of these indexed LEDs.

The user-programmable LED settings select the FlexLogic operands that control the LEDs. If the **LED 1 TYPE** setting is "Self-Reset" (the default setting), the LED illumination tracks the state of the selected LED operand. If the **LED 1 TYPE** setting is "Latched," the LED, once lit, remains so until reset by the front panel **RESET** button, from a remote device via a communications channel, or from any programmed operand, even if the LED operand state de-asserts.

Table 5-15: Recommended settings for user-programmable LEDs

Setting	Parameter	Setting	Parameter
LED 1 operand	SETTING GROUP ACT 1	LED 13 operand	Off
LED 2 operand	SETTING GROUP ACT 2	LED 14 operand	BREAKER 2 OPEN
LED 3 operand	SETTING GROUP ACT 3	LED 15 operand	BREAKER 2 CLOSED
LED 4 operand	SETTING GROUP ACT 4	LED 16 operand	BREAKER 2 TROUBLE
LED 5 operand	SETTING GROUP ACT 5	LED 17 operand	SYNC 1 SYNC OP
LED 6 operand	SETTING GROUP ACT 6	LED 18 operand	SYNC 2 SYNC OP
LED 7 operand	Off	LED 19 operand	Off
LED 8 operand	Off	LED 20 operand	Off
LED 9 operand	BREAKER 1 OPEN	LED 21 operand	AR ENABLED
LED 10 operand	BREAKER 1 CLOSED	LED 22 operand	AR DISABLED
LED 11 operand	BREAKER 1 TROUBLE	LED 23 operand	AR RIP
LED 12 operand	Off	LED 24 operand	AR LO

See the figure in the Setting Groups section of the Control Elements section later in this chapter for an example of group activation.

5.3.12.6 Event cause LED 1(9)

SETTINGS ⇨ PRODUCT SETUP ⇨⇩ USER-PROGRAMMABLE LEDS ⇨⇩ EVENT CAUSE LED 1(9)

■ EVENT CAUSE LED 1 ■	⇔	LED 1 OPERAND: LED PICKUP	Range: FlexLogic operand
	⇩	LED 1 COLOR: Green	Range: Red, Green, Orange
	⇩	LED 1 TYPE: Self-Reset	Range: Self-Reset, Latched

For the graphical front panel, the event cause LED settings select the FlexLogic operands that control the LEDs.

LED 1 TYPE — If set to "Self-Reset," the LED illumination tracks the state of the selected LED operand. If set to "Latched," the LED, once lit, remains so even the LED operand state already de-asserts, until reset by the front panel **RESET** button, from a remote device via a communications channel, or from any programmed operand.

The table outlines default input operand and output operands for each event cause LED.

Table 5-16: Default input and output operand for event cause LEDs

LED	Default input operand	Output operand	Default color
Event Cause LED 1	LED PICKUP	EVENT CAUSE LED 1	Green
Event Cause LED 2	LED VOLTAGE	EVENT CAUSE LED 2	Orange
Event Cause LED 3	LED CURRENT	EVENT CAUSE LED 3	Orange
Event Cause LED 4	LED FREQUENCY	EVENT CAUSE LED 4	Orange
Event Cause LED 5	LED OTHER	EVENT CAUSE LED 5	Orange
Event Cause LED 6	LED PHASE A	EVENT CAUSE LED 6	Orange
Event Cause LED 7	LED PHASE B	EVENT CAUSE LED 7	Orange
Event Cause LED 8	LED PHASE C	EVENT CAUSE LED 8	Orange
Event Cause LED 9	LED NEUTRAL/GROUND	EVENT CAUSE LED 9	Orange

5.3.13 User-programmable self-tests

SETTINGS ⇨ PRODUCT SETUP ⇨⇩ USER-PROGRAMMABLE SELF TESTS

■ USER-PROGRAMMABLE ■ SELF TESTS	⇔	RxGOOSE OFF FUNCTION: Enabled	Range: Disabled, Enabled
	⇩	FIRST ETHERNET FAIL FUNCTION: Disabled	Range: Disabled, Enabled
	⇩	SEC. ETHERNET FAIL FUNCTION: Disabled	Range: Disabled, Enabled
	⇩	THIRD ETHERNET FAIL FUNCTION: Disabled	Range: Disabled, Enabled
	⇩	SFP MODULE FAIL FUNCTION: Disabled	Range: Disabled, Enabled
	⇩	BATTERY FAIL FUNCTION: Enabled	Range: Disabled, Enabled
	⇩	SNTP FAIL FUNCTION: Enabled	Range: Disabled, Enabled
	⇩	IRIG-B FAIL FUNCTION: Enabled	Range: Disabled, Enabled

⇧	**PTP FAIL FUNCTION: Enabled**	Range: Disabled, Enabled

All major self-test alarms are reported automatically with their corresponding FlexLogic operands, events, and targets.

This settings menu allows enabling and disabling of most minor self-test alarms.

When in the Disabled mode, minor alarms do not assert a FlexLogic operand, write to the event recorder, or display target messages. Moreover, they do not trigger the ANY MINOR ALARM or ANY SELF-TEST messages. When in Enabled mode, minor alarms continue to function along with other major and minor alarms. See the Relay Self-tests section in chapter 7 for information on major and minor self-test alarms.

When using the graphical front panel and setting annunciator alarms, the function needs to be enabled here too, else the alarm is not triggered.

5.3.14 Control pushbuttons

SETTINGS ⇨ PRODUCT SETUP ⇨⇩ CONTROL PUSHBUTTONS ⇨ CONTROL PUSHBUTTON 1(7)

■ **CONTROL** ■ **PUSHBUTTON 1**	⇔	**CONTROL PUSHBUTTN 1 ID CTRL PB 1**	Range: up to 20 alphanumeric characters
	⇩	**CONTROL PUSHBUTTON 1 FUNCTION: Disabled**	Range: Disabled, Enabled
	⇧	**CONTROL PUSHBUTTON 1 EVENTS: Disabled**	Range: Disabled, Enabled

5

This feature is supported with enhanced and basic front panels.

There are three standard control pushbuttons, labelled USER 1, USER 2, and USER 3, on the basic and enhanced front panels. These are user-programmable and can be used for various applications such as performing an LED test, switching setting groups, and invoking and scrolling though user-programmable displays.

Firmware revisions 3.2x and older use these three pushbuttons for manual breaker control. This functionality has been retained—if the breaker control feature is configured to use the three pushbuttons, they cannot be used as user-programmable control pushbuttons.

The locations of the control pushbuttons are shown in the following figures.

Figure 5-53: Control pushbuttons (enhanced front panel)

842813A1.CDR

An additional four control pushbuttons are included on the basic front panel when the L90 is ordered with the 12 user-programmable pushbutton option.

Figure 5-54: Control pushbuttons (basic front panel)

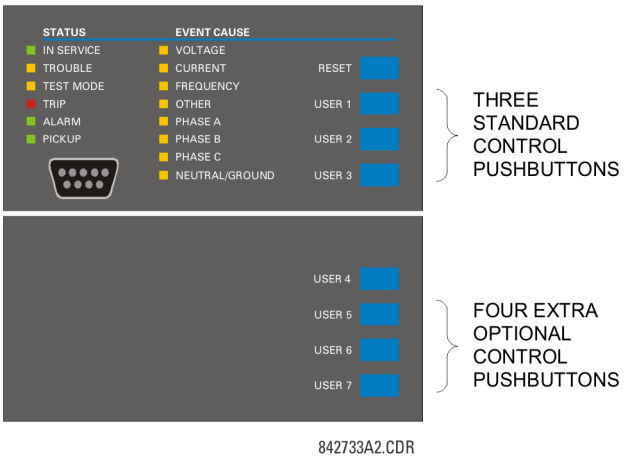

842733A2.CDR

Control pushbuttons are not typically used for critical operations and are not protected by the control password. However, by supervising their output operands, the user can dynamically enable or disable control pushbuttons for security reasons.

Each control pushbutton asserts its own FlexLogic operand. Each operand need to be configured appropriately to perform the required function. Each operand remains asserted as long as the pushbutton is pressed and resets when the pushbutton is released. A dropout delay of 100 ms is incorporated to ensure fast pushbutton manipulation is recognized by various features that can use control pushbuttons as inputs.

An event is logged in the event record (as per user setting) when a control pushbutton is pressed. No event is logged when the pushbutton is released. The front panel keys (including control keys) cannot be operated simultaneously—a given key must be released before the next one can be pressed.

The control pushbuttons become user-programmable only if the breaker control feature is not configured for manual control via the USER 1 through 3 pushbuttons as shown. If configured for manual control, breaker control typically uses the larger, optional user-programmable pushbuttons, making the control pushbuttons available for other user applications.

Figure 5-55: Control pushbutton logic

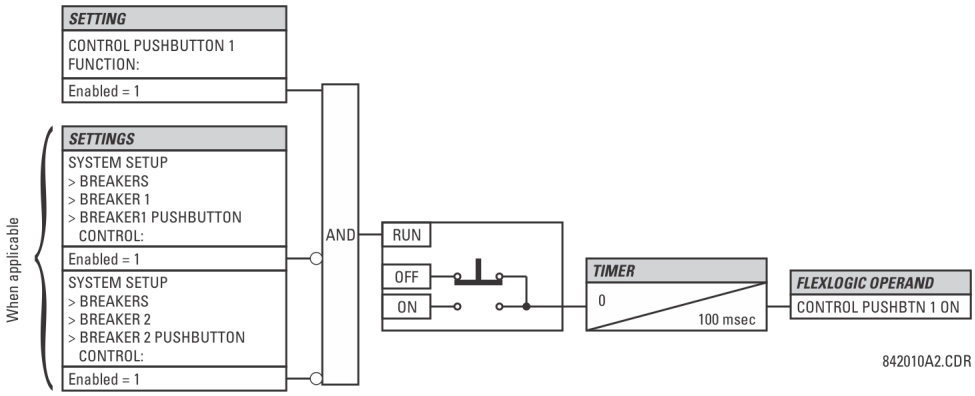

5.3.15 User-programmable pushbuttons

SETTINGS ⇨ PRODUCT SETUP ⇨⇩ USER-PROGRAMMABLE PUSHBUTTONS ⇨ USER PUSHBUTTON 1(16)

■ **USER PUSHBUTTON 1** ■	⇔	**PUSHBUTTON 1 FUNCTION: Disabled**	Range: Self-Reset, Latched, Disabled
	⇩	**PUSHBTN 1 ID TEXT: USER PB 1**	Range: up to 20 alphanumeric characters

⇕	**PUSHBTN 1 ON TEXT: PUSHBTN 1 ON**	Range: up to 20 alphanumeric characters
⇕	**PUSHBTN 1 OFF TEXT: PUSHBTN 1 OFF**	Range: up to 20 alphanumeric characters
⇕	**PUSHBTN 1 HOLD: 0.1 s**	Range: 0.0 to 10.0 s in steps of 0.1
⇕	**PUSHBTN 1 SET: Off**	Range: FlexLogic operand
⇕	**PUSHBTN 1 RESET: Off**	Range: FlexLogic operand
⇕	**PUSHBTN 1 AUTORST: Disabled**	Range: Disabled, Enabled
⇕	**PUSHBTN 1 AUTORST DELAY: 1.0 s**	Range: 0.2 to 600.0 s in steps of 0.1
⇕	**PUSHBTN 1 REMOTE: Off**	Range: FlexLogic operand
⇕	**PUSHBTN 1 LOCAL: Off**	Range: FlexLogic operand
⇕	**PUSHBTN 1 DROP-OUT TIME: 0.00 s**	Range: 0 to 60.00 s in steps of 0.05
⇕	**PUSHBTN 1 LED CTL: Off**	Range: FlexLogic operand
⇕	**PUSHBTN 1 MESSAGE: Disabled**	Range: Disabled, Normal, High Priority
⇧	**PUSHBUTTON 1 EVENTS: Disabled**	Range: Disabled, Enabled

SOFTWARE OPTION

The L90 is provided with this optional feature, specified as an option at the time of ordering. Using the order code for your device, see the order codes in chapter 2 for details.

User-programmable pushbuttons provide an easy and error-free method of entering digital state (on, off) information. The number depends on the front panel ordered.

- Enhanced horizontal front panel — 16 user-programmable pushbuttons
- Enhanced vertical front panel — 6 user-programmable pushbuttons
- Basic horizontal front panel — 12 user-programmable pushbuttons
- Graphical front panel — 16 user-programmable pushbuttons (eight physical pushbuttons, eight graphical interface pushbuttons)

NOTE

User-programmable pushbuttons require a front panel with that option. If the front panel was ordered separately, update the EnerVista software under **Maintenance > Change Front Panel**.

The digital state can be entered locally (by directly pressing the front panel pushbutton or optional graphical front panel interface) or remotely (via FlexLogic operands) into FlexLogic equations, protection elements, and control elements. Typical applications include breaker control, autorecloser blocking, and setting groups changes. For example, set pushbuttons 1 to 5 to select settings groups 1 to 5, or set pushbutton 1 to clear event records. The user-programmable pushbuttons are under the control level of password protection.

Example

To clear event records using pushbutton 1, set **Settings > Product Setup > Clear Relay Records > Clear Event Records** to FlexLogic operand PUSHBUTTON 1 ON. Then program the pushbutton by setting **Settings > Product Setup > User-Programmable Pushbuttons > Pushbutton 1 Function** to "Self-reset." For a graphical front panel, to use a side pushbutton 9 to 16 to clear the event records, it also needs to be programmed in a single-line diagram.

The figures show user-configurable pushbuttons for the front panels.

Figure 5-56: User-programmable pushbuttons (enhanced front panel)

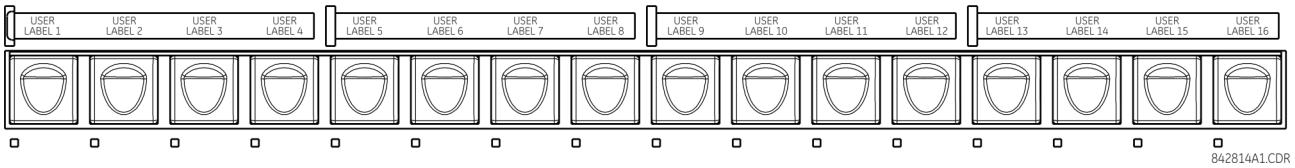

Figure 5-57: User-programmable pushbuttons (basic front panel)

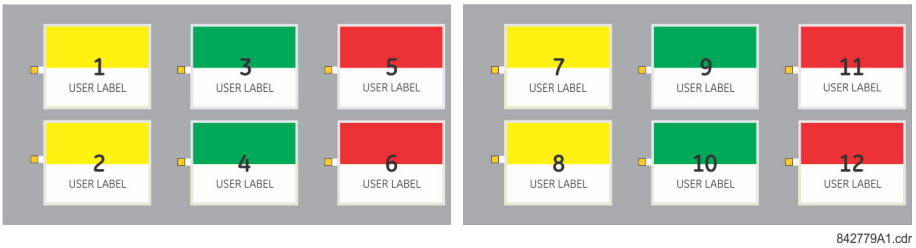

Figure 5-58: User-programmable pushbuttons (graphical front panel)

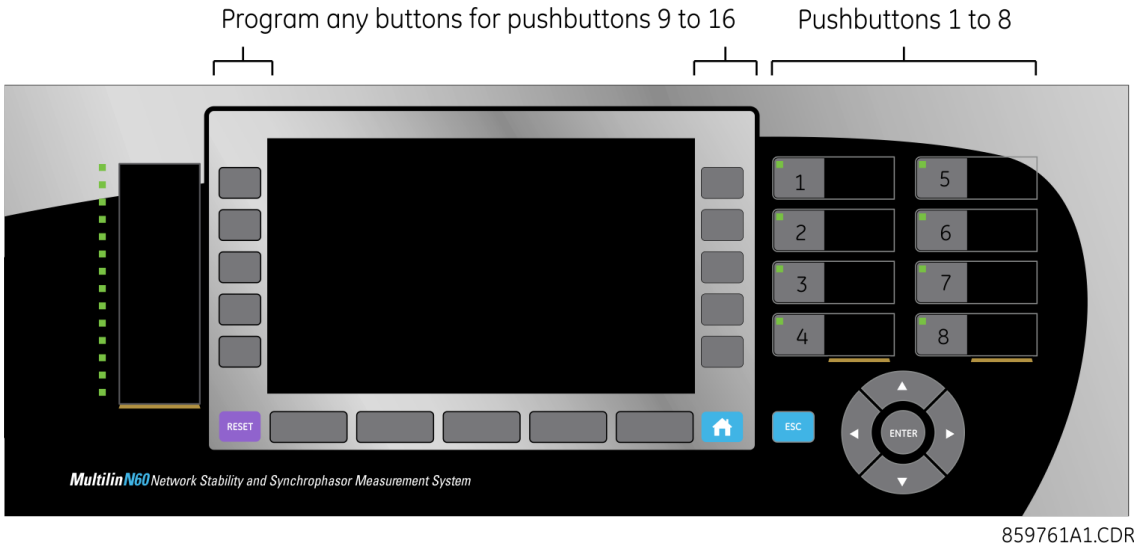

Front panel pushbuttons and LEDs can be custom labeled as outlined in the Front Panel Labeling section in the previous chapter.

Each pushbutton asserts its own "On" and "Off" FlexLogic operands (for example, PUSHBUTTON 1 ON and PUSHBUTTON 1 OFF). These operands are available for each pushbutton and are used to program specific actions. If any pushbutton is active, the ANY PB ON operand is asserted.

Each pushbutton has an associated LED indicator. By default, this indicator displays the present status of the corresponding pushbutton (on or off). However, each LED indicator can be assigned to any FlexLogic operand through the **PUSHBTN 1 LED CTL** setting.

The activation and deactivation of user-programmable pushbuttons depends on whether latched or self-reset mode is programmed.

- **Latched mode** — In latched mode, a pushbutton can be set (activated) by asserting the operand assigned to the **PUSHBTN 1 SET** setting, by directly pressing the associated front panel pushbutton, or with the graphical front panel interface. The state of each pushbutton is stored in non-volatile memory and maintained through a loss of control power.

  The pushbutton is reset (deactivated) in latched mode by asserting the operand assigned to the **PUSHBTN 1 RESET** setting, by directly pressing the active front panel pushbutton, or with the graphical front panel interface.

  It can also be programmed to reset automatically through the **PUSHBTN 1 AUTORST** and **PUSHBTN 1 AUTORST DELAY** settings. These settings enable the autoreset timer and specify the associated time delay. The autoreset timer can be used in select-before-operate (SBO) breaker control applications, where the command type (close/open) or breaker location (feeder number) must be selected prior to command execution. The selection must reset automatically if control is not executed within a specified time period.
- **Self-reset mode** — In self-reset mode, a user-programmable pushbutton can be set (activated) by asserting the operand assigned to the **PUSHBTN 1 SET** setting, by pressing the front panel pushbutton, or by the graphical front panel interface. A pushbutton remains active for the time it is pressed physically or pressed in the graphical front panel interface, plus the dropout time specified in the **PUSHBTN 1 DROP-OUT TIME** setting. If the pushbutton is activated via FlexLogic, the pulse duration is specified by the **PUSHBTN 1 DROP-OUT TIME** only. The time the operand assigned to the **PUSHBTN 1 SET** setting remains On has no effect on the pulse duration.

NOTE

The pulse duration of the remote set or local front panel pushbutton must be at least 56 ms for a 60 Hz system or 60 ms for a 50 Hz system to operate the pushbutton. This allows the user-programmable pushbuttons to properly operate during power cycling events and various system disturbances that can cause transient assertion of the operating signals.

5

The local and remote operation of each user-programmable pushbutton can be inhibited through the **PUSHBTN 1 LOCAL** and **PUSHBTN 1 REMOTE** settings. If local inhibit is applied, the pushbutton ignores set and reset commands executed through the front panel pushbuttons. If remote inhibit is applied, the pushbutton ignores set and reset commands executed through FlexLogic operands.

The inhibit functions are not applied to the autoreset feature. The inhibit function can be used in SBO control operations to prevent user-programmable pushbutton activation and ensuring “one-at-a-time” select operation.

The inhibit functions can also be used to prevent pushbutton activation from the accidental pressing of the front panel pushbuttons. The separate inhibit of the local and remote operation simplifies the implementation of local/remote control supervision.

Pushbutton states can be logged by the event recorder. User-defined messages can also be associated with each pushbutton and displayed on basic and enhanced front panels when the user-programmable pushbutton is activated, and when in the latched mode when the user-programmable pushbutton is deactivated. With the graphical front panel interface, instead of messages, the status of user-programmable pushbuttons can display on a single-line diagram and can also display in annunciator page windows and in actual values page cells.

For the graphical front panel, the pushbuttons 1 to 8 are linked to the eight physical pushbuttons, and pushbuttons 9 to 16 are mapped to the graphical interface pushbuttons. To set the buttons for pushbuttons 9 to 16, access **Settings > Product Setup > Graphical Panel > Single Line Diagram Editor**, click the PB symbol in the toolbox, then configure pushbuttons 9 to 16.

PUSHBUTTON 1 FUNCTION — This setting selects the mode of the pushbutton (Self-Reset, Latched, Disabled). If set to “Disabled,” the pushbutton is not active and the corresponding FlexLogic operands (both “On” and “Off”) are de-asserted. If set to "Latched," the pushbutton remains on until reset.

PUSHBTN 1 ID TEXT — This setting specifies the top 20-character line of the user-programmable pushbutton message and is intended to provide ID information of the pushbutton. For example, the text displays in the Event Record. See the User-definable Displays section in this chapter for instructions on how to enter alphanumeric characters from the keypad. On a graphical front panel, this setting instead controls the label of the user-programmable pushbutton component on single-line diagrams.

PUSHBTN 1 ON TEXT — This setting specifies the bottom 20-character line of the user-programmable pushbutton message and is displayed when the pushbutton is in the "on" position. See the User-definable Displays section for instructions on entering alphanumeric characters from the keypad. On a graphical front panel, this setting instead controls the on status text of the user-programmable pushbutton component on single-line diagrams. This setting is not applied to the physical pushbuttons on the graphical front panel.

PUSHBTN 1 OFF TEXT — This setting specifies the bottom 20-character line of the user-programmable pushbutton message and displays when the pushbutton is deactivated and the **PUSHBUTTON 1 FUNCTION** is "Latched." A message does not display when the **PUSHBUTTON 1 FUNCTION** is "Self-reset" as the pushbutton operand status is implied to be "Off" upon its release. The length of the "Off" message is configured with the **PRODUCT SETUP ⇨⇩ DISPLAY PROPERTIES ⇨ FLASH MESSAGE TIME** setting. On a graphical front panel, this setting instead controls the off status text of the user-programmable pushbutton component on single-line diagrams. This setting is not applied to the physical pushbuttons on the graphical front panel.

PUSHBTN 1 HOLD — This setting specifies the time required for a front panel pushbutton to be pressed before it is deemed active. This timer is reset upon release of the pushbutton. Note that user-programmable pushbutton operation requires the front panel pushbutton to be pressed a minimum of 56 ms for a 60 Hz system or 60 ms for a 50 Hz system. This minimum time is required prior to activating the user-programmable pushbutton hold timer.

PUSHBTN 1 SET — This setting assigns the FlexLogic operand serving to activate the user-programmable pushbutton element. The duration of the incoming set signal must be at least 56 ms for a 60 Hz system or 60 ms for a 50 Hz system.

PUSHBTN 1 RESET — This setting assigns the FlexLogic operand serving to deactivate the user-programmable pushbutton element. This setting is applicable only if the user-programmable pushbutton is in "Latched" mode.

PUSHBTN 1 AUTORST — This setting enables the user-programmable pushbutton autoreset feature. This setting is applicable only if the pushbutton is in "Latched" mode.

PUSHBTN 1 AUTORST DELAY — This setting specifies the time delay for automatic reset of the pushbutton when in "Latched" mode.

PUSHBTN 1 REMOTE — This setting assigns the FlexLogic operand serving to inhibit user-programmable pushbutton operation from the operand assigned to the **PUSHBTN 1 SET** or **PUSHBTN 1 RESET** settings.

PUSHBTN 1 LOCAL — This setting assigns the FlexLogic operand serving to inhibit user-programmable pushbutton operation from the front panel pushbuttons. This inhibit functionality is not applicable to pushbutton autoreset.

PUSHBTN 1 DROP-OUT TIME — This setting applies only to "Self-Reset" mode and specifies the duration of the user-programmable pushbutton active status after the front panel pushbutton or graphical front panel interface pushbutton has been released. When activated remotely, this setting specifies the entire activation time of the pushbutton; the length of time the operand selected by **PUSHBTN 1 SET** remains on has no effect on the pulse duration.

PUSHBTN 1 LED CTL — This setting assigns the FlexLogic operand serving to drive the front panel pushbutton LED. If this setting is "Off," then LED operation is directly linked to the PUSHBUTTON 1 ON operand. This setting is not applied to Pushbuttons 9 to 16 on the graphical front panel, where the label background shows the orange glow color for the "on" state.

PUSHBTN 1 MESSAGE — This setting controls the behavior of the user-programmable pushbutton on message that is programmed in the **PUSHBTN 1 ID** and **PUSHBTN 1 ON TEXT** settings, and the behavior of the user-programmable pushbutton off message that is programmed in the **PUSHBTN 1 ID** and **PUSHBTN 1 OFF TEXT** settings. This settings has no effect on the graphical front panel.

When set to "Disabled", user-programmable pushbutton messages do not display. Otherwise the on message displays when the user-programmable pushbutton becomes activated, and if in the "Latched" mode the off message displays when the user-programmable pushbutton becomes deactivated.

When set to "Normal", the duration the message displays is as specified by the **FLASH MESSAGE TIME** setting.

When set to "High Priority", the duration of the off message is as specified by the **FLASH MESSAGE TIME** setting, but the on message is displayed as long as the user-programmable pushbutton is activated. While activated, target and other messages are suppressed. To allow front panel keypad operation, when a keypad button is pressed the message is supressed for 10 seconds.

PUSHBUTTON 1 EVENTS — If this setting is enabled, each user-programmable pushbutton state change is logged as an event into the event recorder.

The figures show the user-programmable pushbutton logic.

Figure 5-59: User-programmable pushbutton logic (Sheet 1 of 2)

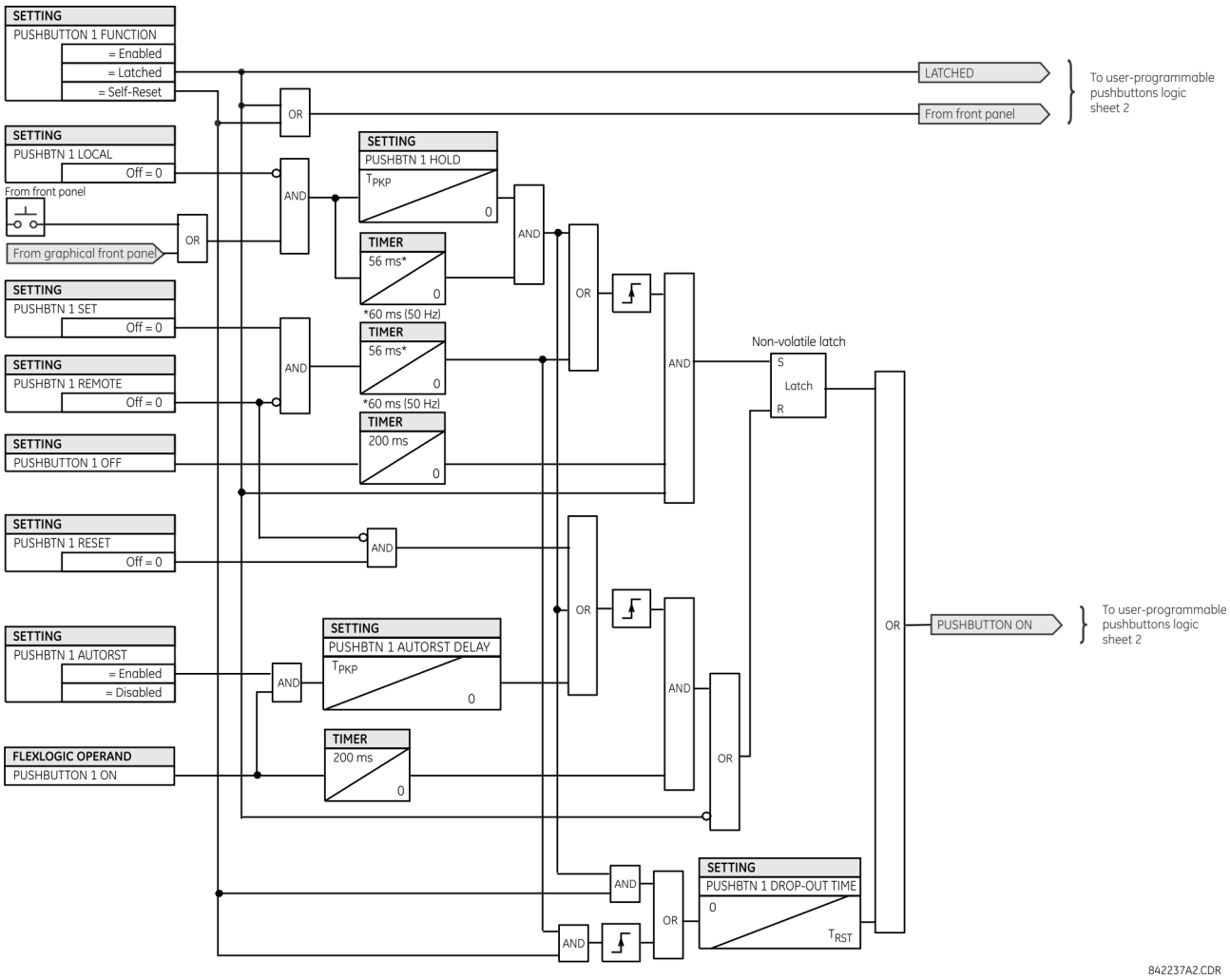

Figure 5-60: User-programmable pushbutton logic (Sheet 2 of 2)

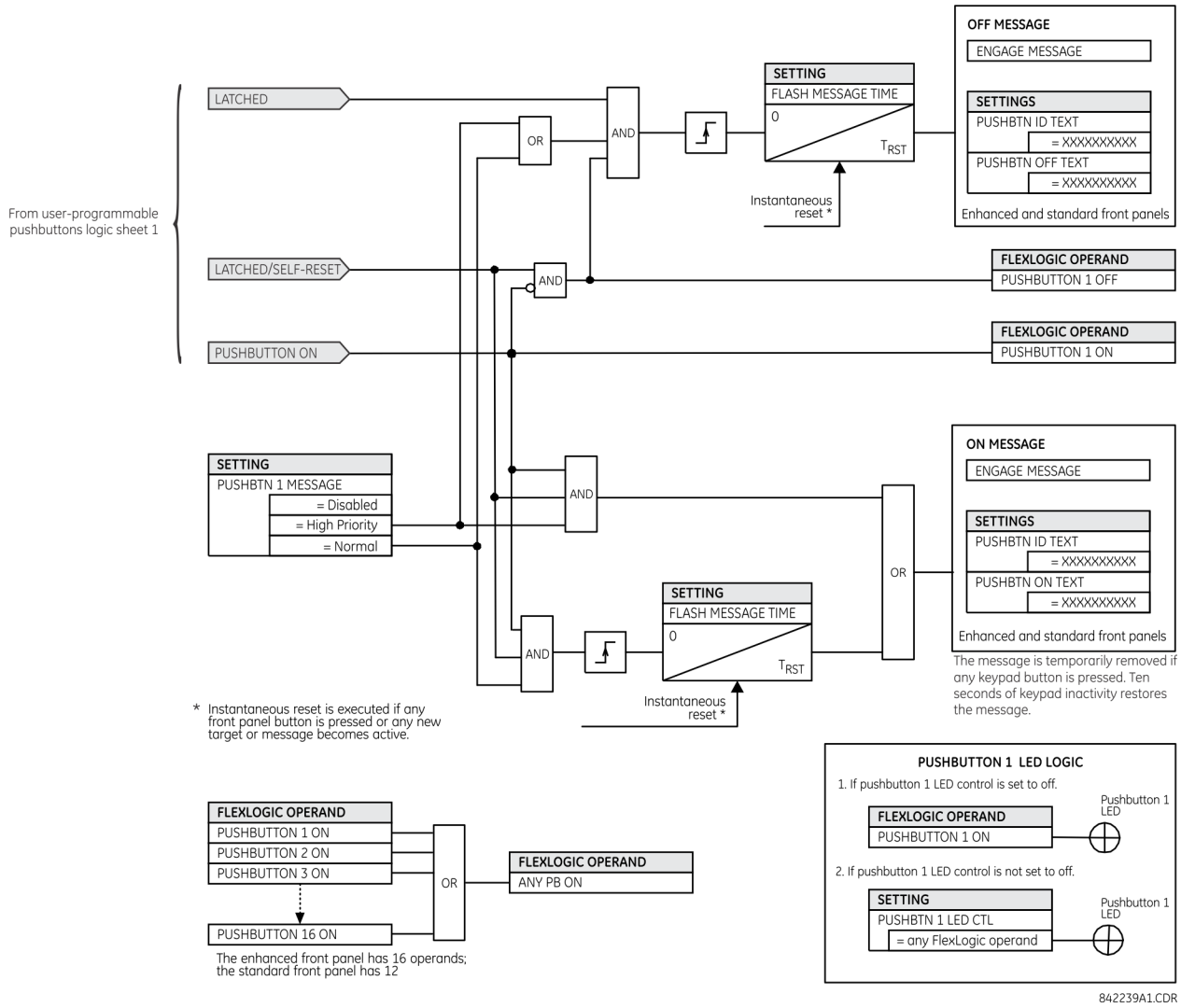

5.3.16 Flex state parameters

SETTINGS ⇨ PRODUCT SETUP ⇨⇩ FLEX STATE PARAMETERS

■ FLEX STATE ■ PARAMETERS	⇔	**PARAMETER 1:** **Off**	Range: FlexLogic operand
		⇩	
	⇧	**PARAMETER 256:** **Off**	Range: FlexLogic operand

This feature provides a mechanism where any of 256 selected FlexLogic operand states can be used for efficient monitoring. The feature allows user-customized access to the FlexLogic operand states in the relay. The state bits are packed so that 16 states are readable in a single Modbus register. The state bits can be configured so that all states of interest are available in a minimum number of Modbus registers.

The state bits can be read out in the "Flex States" register array beginning at Modbus address 0900h. Sixteen states are packed into each register, with the lowest-numbered state in the lowest-order bit. Sixteen registers accommodate the 256 state bits.

5.3.17 User-definable displays

5.3.17.1 Menu

SETTINGS ⇨ PRODUCT SETUP ⇨⇩ USER-DEFINABLE DISPLAYS

■ USER-DEFINABLE ■ DISPLAYS	⇔	INVOKE AND SCROLL: Off	Range: FlexLogic operand
	⇩	■ USER DISPLAY 1 ■	See below
	⇩		
	⇧	■ USER DISPLAY 16 ■	

This feature is supported with enhanced and basic front panels.

This menu provides a mechanism for manually creating up to 16 user-defined information displays in a convenient viewing sequence in the **USER DISPLAY** menu (between the **TARGETS** and **ACTUAL VALUES** top-level menus). The sub-menus facilitate text entry and Modbus register data pointer options for defining the user display content.

This feature is not supported with the optional graphical front panel.

Once programmed, the user-definable displays can be viewed in two ways.

- **Keypad** — Use the **MENU** key to select the **USER DISPLAY** menu item to access the first user-definable display (note that only the programmed screens are displayed). The screens can be scrolled using the up and down arrow keys. The display disappears after the default message time-out period specified by the **PRODUCT SETUP ⇨⇩ DISPLAY PROPERTIES ⇨⇩ DEFAULT MESSAGE TIMEOUT** setting.
- **User-programmable control input** — The user-definable displays also respond to the **INVOKE AND SCROLL** setting. Any FlexLogic operand (in particular, the user-programmable pushbutton operands), can be used to navigate the programmed displays.

  On the rising edge of the configured operand (such as when the pushbutton is pressed), the displays are invoked by showing the last user-definable display shown during the previous activity. From this moment onward, the operand acts exactly as the down key and allows scrolling through the configured displays. The last display wraps up to the first one. The **INVOKE AND SCROLL** input and the down arrow key operate concurrently.

  When the default timer expires (set by the **DEFAULT MESSAGE TIMEOUT** setting), the relay starts to cycle through the user displays. The next activity of the **INVOKE AND SCROLL** input stops the cycling at the currently displayed user display, not at the first user-defined display. The **INVOKE AND SCROLL** pulses must last for at least 250 ms to take effect.

5.3.17.2 User display 1(16)

SETTINGS ⇨ PRODUCT SETUP ⇨⇩ USER-DEFINABLE DISPLAYS ⇨⇩ USER DISPLAY 1(16)

■ USER DISPLAY 1 ■	⇔	DISP 1 TOP LINE:	Range: up to 20 alphanumeric characters
	⇩	DISP 1 BOTTOM LINE:	Range: up to 20 alphanumeric characters
	⇩	DISP 1 ITEM 1: 0	Range: 0 to 65535 in steps of 1
	⇩		
	⇧	DISP 1 ITEM 5: 0	Range: 0 to 65535 in steps of 1

Any existing system display can be automatically copied into an available user display by selecting the existing display and pressing the **ENTER** key. The display then prompts with ADD TO USER DISPLAY LIST? After selecting "Yes," a message indicates that the selected display has been added to the user display list. When this type of entry occurs, the sub-menus are automatically configured with the proper content—this content can be edited subsequently.

This menu is used to enter user-defined text and user-selected Modbus-registered data fields into the particular user display. Each user display consists of two 20-character lines (top and bottom). The tilde (~) character is used to mark the start of a data field – the length of the data field needs to be accounted for. Up to five separate data fields can be entered in a user display – the *n*th tilde (~) refers to the *n*th item.

A user display can be entered from the front panel keypad or the EnerVista interface (preferred for convenience). The following procedure shows how to enter text characters in the top and bottom lines from the front panel keypad:

1. Select the line to be edited.
2. Press the decimal key to enter text edit mode.
3. Use either **VALUE** key to scroll through the characters. A space is selected like a character.
4. Press the decimal key to advance the cursor to the next position.
5. Repeat step 3 and continue entering characters until the desired text is displayed.
6. The **HELP** key can be pressed at any time for context sensitive help information.
7. Press the **ENTER** key to store the new settings.

To enter a numerical value for any of the five items (the *decimal form* of the selected Modbus address) from the front panel keypad, use the number keypad. Use the value of "0" for any items not being used. Use the **HELP** key at any selected system display (setting, actual value, or command) which has a Modbus address, to view the *hexadecimal form* of the Modbus address, then manually convert it to decimal form before entering it (EnerVista usage conveniently facilitates this conversion).

Use the **MENU** key to go to the user displays menu to view the user-defined content. The current user displays show in sequence, changing every four seconds. While viewing a user display, press the **ENTER** key and then select the 'Yes" option to remove the display from the user display list. Use the **MENU** key again to exit the user displays menu.

An example of user display setup and result is shown as follows.

■ USER DISPLAY 1 ■	⇔	DISP 1 TOP LINE: Current X ~ A	Shows user-defined text with first tilde marker
	⇩	DISP 1 BOTTOM LINE: Current Y ~ A	Shows user-defined text with second tilde marker
	⇩	DISP 1 ITEM 1: 6016	Shows decimal form of user-selected Modbus register address, corresponding to first tilde marker
	⇩	DISP 1 ITEM 2: 6357	Shows decimal form of user-selected Modbus register address, corresponding to second tilde marker
	⇩	DISP 1 ITEM 3: 0	This item is not being used. There is no corresponding tilde marker in top or bottom lines.
	⇩	DISP 1 ITEM 4: 0	This item is not being used. There is no corresponding tilde marker in top or bottom lines.
	⇧	DISP 1 ITEM 5: 0	This item is not being used. There is no corresponding tilde marker in top or bottom lines.
USER DISPLAYS	⇨	Current X 0.850 Current Y 0.327 A	Shows the resultant display content

If the parameters for the top line and the bottom line items have the same units, then the unit is displayed on the bottom line only. The units are only displayed on both lines if the units specified both the top and bottom line items are different.

5.3.18 Installation

SETTINGS ⇨ PRODUCT SETUP ⇨⇩ INSTALLATION

■ INSTALLATION ■	⇔	RELAY SETTINGS: Not Programmed	Range: Not Programmed, Programmed

⇧	**RELAY NAME:** **Relay-1**	Range: up to 20 alphanumeric characters

RELAY SETTINGS — To safeguard against the installation of a relay without any entered settings, the unit does not allow signaling of any output relay until **RELAY SETTINGS** is set to "Programmed." This setting is "Not Programmed" by default. The UNIT NOT PROGRAMMED self-test error message displays until the relay is put into the "Programmed" state.

RELAY NAME — This setting allows the user to uniquely identify a relay. This name appears on generated reports.

5.4 Remote resources

5.4.1 Remote resources configuration

When the L90 is ordered with a process card module as a part of HardFiber system, an additional **Remote Resources** menu tree is available in the EnerVista software to allow configuration of the HardFiber system.

Figure 5-61: Remote Resources configuration menu

The remote resources settings configure a L90 with a process bus module to work with HardFiber Bricks. Remote resources configuration is only available through the EnerVista software, and is not available through the L90 front panel. A Brick provides eight AC measurements, along with contact inputs, DC analog inputs, and contact outputs, to be the remote interface to field equipment such as circuit breakers and transformers. The L90 with a process bus module has access to all of the capabilities of up to eight Bricks. Remote resources settings configure the point-to-point connection between specific fiber optic ports on the L90 process card and specific Brick. The relay is then configured to measure specific currents, voltages and contact inputs from those Bricks, and to control specific outputs.

The configuration process for remote resources is straightforward and consists of the following steps.

- Configure the field units. This establishes the point-to-point connection between a specific port on the relay process bus module, and a specific digital core on a specific Brick. This is a necessary first step in configuring a process bus relay.
- Configure the AC banks. This sets the primary and secondary quantities and connections for currents and voltages. AC bank configuration also provides a provision for redundant measurements for currents and voltages, a powerful reliability improvement possible with process bus.
- Configure signal sources. This functionality of the L90 has not changed other than the requirement to use currents and voltages established by AC bank configuration under the remote resources menu.
- Configure field contact inputs, field contact outputs, RTDs, and transducers as required for the application's functionality. These inputs and outputs are the physical interface to circuit breakers, transformers, and other

equipment. They replace the traditional contact inputs and outputs located at the relay to virtually eliminate copper wiring.

- Configure shared inputs and outputs as required for the application's functionality. Shared inputs and outputs are distinct binary channels that provide high-speed protection quality signaling between relays through a Brick.

For additional information on how to configure a relay with a process bus module, see the HardFiber Process Bus System Instruction Manual.

5.5 System setup

5.5.1 AC inputs

5.5.1.1 Current banks

SETTINGS ⇨⇩ SYSTEM SETUP ⇨ AC INPUTS ⇨ CURRENT BANK F1(L5)

■ CURRENT BANK F1 ■	⇔	PHASE CT F1 PRIMARY: 1 A	Range: 1 to 65000 A in steps of 1
	⇩	PHASE CT F1 SECONDARY: 1 A	Range: 1 A, 5 A
	⇩	GROUND CT F1 PRIMARY: 1 A	Range: 1 to 65000 A in steps of 1
	⇧	GROUND CT F1 SECONDARY: 1 A	Range: 1 A, 5 A

Because energy parameters are accumulated, record these values and then reset immediately prior to changing CT characteristics.

Four banks of phase and ground CTs can be set, where the current banks are denoted in the following format (X represents the module slot position letter):

Xa, where X = {F, L} and a = {1, 5}

See the Introduction to AC Sources section at the beginning of this chapter for details.

These settings are critical for all features that have settings dependent on current measurements. When the relay is ordered, the CT module must be specified to include a standard or sensitive ground input. As the phase CTs are connected in wye (star), the calculated phasor sum of the three phase currents (IA + IB + IC = neutral current = 3I0) is used as the input for the neutral overcurrent elements. In addition, a zero-sequence (core balance) CT which senses current in all of the circuit primary conductors, or a CT in a neutral grounding conductor can also be used. For this configuration, the ground CT primary rating must be entered. To detect low level ground fault currents, the sensitive ground input can be used. In this case, the sensitive ground CT primary rating must be entered. See chapter 3 for more details on CT connections.

Enter the rated CT primary current values. For both 1000:5 and 1000:1 CTs, the entry would be 1000. For correct operation, the CT secondary rating must match the setting (which must also correspond to the specific CT connections used).

The following example illustrates how multiple CT inputs (current banks) are summed as one source current. Given the following current banks:

- F1: CT bank with 500:1 ratio
- F5: CT bank with 1000:1 ratio
- L1: CT bank with 800:1 ratio

The following rule applies:

$$SRC\ 1 = F1 + F5 + L1 \qquad \textbf{Eq. 5-7}$$

1 pu is the highest primary current. In this case, 1000 is entered and the secondary current from the 500:1 and 800:1 ratio CTs are adjusted to that created by a 1000:1 CT before summation. If a protection element is set up to act on SRC 1 currents, then a pickup level of 1 pu operates on 1000 A primary.

The same rule applies for current sums from CTs with different secondary taps (5 A and 1 A).

5.5.1.2 Voltage banks

SETTINGS ⇨⇩ SYSTEM SETUP ⇨ AC INPUTS ⇨⇩ VOLTAGE BANK F5(L5)

■ **VOLTAGE BANK F5** ■	⇔	**PHASE VT F5 CONNECTION: Wye**	Range: Wye, Delta
	⇩	**PHASE VT F5 SECONDARY: 66.4 V**	Range: 25.0 to 240.0 V in steps of 0.1
	⇩	**PHASE VT F5 RATIO: 1.00 :1**	Range: 1.00 to 24000.00 in steps of 0.01
	⇩	**AUXILIARY VT F5 CONNECTION: Vag**	Range: Vn, Vag, Vbg, Vcg, Vab, Vbc, Vca
	⇩	**AUXILIARY VT F5 SECONDARY: 66.4 V**	Range: 25.0 to 240.0 V in steps of 0.1
	⇧	**AUXILIARY VT F5 RATIO: 1.00 :1**	Range: 1.00 to 24000.00 in steps of 0.01

Because energy parameters are accumulated, these values should be recorded and then reset immediately prior to changing VT characteristics.

Two banks of phase/auxiliary VTs can be set, where voltage banks are denoted in the following format (X represents the module slot position letter):

Xa, where X = {F, L} and a = {5}

See the Introduction to AC Sources section at the beginning of this chapter for details.

With VTs installed, the relay can perform voltage measurements as well as power calculations. Enter the **PHASE VT F5 CONNECTION** made to the system as "Wye" or "Delta." An open-delta source VT connection is entered as "Delta."

NOTE

The nominal **PHASE VT F5 SECONDARY** voltage setting is the voltage across the relay input terminals when nominal voltage is applied to the VT primary.

For example, on a system with a 13.8 kV nominal primary voltage and with a 14400:120 volt VT in a delta connection, the secondary voltage is 115; that is, (13800 / 14400) × 120. For a wye connection, the voltage value entered must be the phase to neutral voltage, which is 115 / $\sqrt{3}$ = 66.4.

On a 14.4 kV system with a delta connection and a VT primary to secondary turns ratio of 14400:120, the voltage value entered is 120; that is, 14400 / 120.

5.5.2 Power system

SETTINGS ⇨⇩ SYSTEM SETUP ⇨⇩ POWER SYSTEM

■ **POWER SYSTEM** ■	⇔	**NOMINAL FREQUENCY: 60 Hz**	Range: 25 to 60 Hz in steps of 1
	⇩	**PHASE ROTATION: ABC**	Range: ABC, ACB
	⇩	**FREQUENCY AND PHASE REFERENCE: SRC 1**	Range: SRC 1, SRC 2, SRC 3, SRC 4
	⇧	**FREQUENCY TRACKING: Enabled**	Range: Disabled, Enabled

The power system **NOMINAL FREQUENCY** value is used as a default to set the digital sampling rate if the system frequency cannot be measured from available signals. This can happen if the signals are not present or are heavily distorted. Before reverting to the nominal frequency, the frequency tracking algorithm holds the last valid frequency measurement for a safe period of time while waiting for the signals to reappear or for the distortions to decay. After changing this setting, restart the relay using **Maintenance > Reboot Relay Command**.

NOTE

Select the nominal system frequency as 50 Hz or 60 Hz only. The **FREQUENCY AND PHASE REFERENCE** setting, used as a reference for calculating all angles, must be identical for all terminals. Whenever the 87L function is "Enabled," the frequency tracking function is disabled, and frequency tracking is driven by the UR algorithm. Whenever the 87L function is "Disabled," the frequency tracking mechanism reverts to the UR-series mechanism that uses the **FREQUENCY TRACKING** setting to provide frequency tracking for all other elements and functions.

The phase sequence of the power system is required to properly calculate sequence components and power parameters. The **PHASE ROTATION** setting matches the power system phase sequence and informs the relay of the actual system phase sequence, either ABC or ACB. CT and VT inputs on the relay, labeled as A, B, and C, must be connected to system phases A, B, and C for correct operation.

The **FREQUENCY AND PHASE REFERENCE** setting determines which signal source is used (and hence which AC signal) for phase angle reference. The AC signal used is prioritized based on the AC inputs configured for the signal source. Phase voltages takes precedence, followed by auxiliary voltage, then phase currents, and finally ground current.

For three phase selection, phase A is used for angle referencing ($V_{ANGLE\ REF} = V_A$), while Clarke transformation of the phase signals is used for frequency metering and tracking ($V_{FREQUENCY} = (2V_A - V_B - V_C) / 3$) for better performance during fault, open pole, and VT and CT fail conditions.

The phase reference and frequency tracking AC signals are selected based upon the source configuration, regardless of whether or not a particular signal is actually applied to the relay.

Phase angle of the reference signal always displays zero degrees and all other phase angles are relative to this signal. If the pre-selected reference signal is not measurable at a given time, the phase angles are not referenced.

The phase angle referencing is done via a phase locked loop, which can synchronize independent UR-series relays if they have the same AC signal reference. This results in very precise correlation of phase angle indications between different UR-series relays.

FREQUENCY TRACKING is set to "Disabled" only in unusual circumstances; consult GE Grid Solutions for special variable-frequency applications.

NOTE

The frequency tracking feature functions only when the L90 is in the "Programmed" mode. If the L90 is "Not Programmed," then metering values are available but can exhibit significant errors.

5.5.3 Signal sources

SETTINGS ⇨⇩ SYSTEM SETUP ⇨⇩ SIGNAL SOURCES ⇨ SOURCE 1(4)

■ **SOURCE 1** ■	⇔	**SOURCE 1 NAME:** **SRC 1**	Range: up to 20 alphanumeric characters
	⇩	**SOURCE 1 PHASE CT:** **None**	Range: None, F1,... up to any 6 CTs. Only Phase CT inputs are displayed.
	⇩	**SOURCE 1 GROUND CT:** **None**	Range: None, F1,... up to any 6 CTs. Only Ground CT inputs are displayed.
	⇩	**SOURCE 1 PHASE VT:** **None**	Range: None, F5, L5 Only phase voltage inputs are displayed
	⇧	**SOURCE 1 AUX VT:** **None**	Range: None, F5, L5 Only auxiliary voltage inputs are displayed

Identical menus are available for each source. The "SRC 1" text can be replaced by with a user-defined name appropriate for the associated source.

The first letter in the source identifier represents the module slot position. The number directly following this letter represents either the first bank of four channels (1, 2, 3, 4) called “1” or the second bank of four channels (5, 6, 7, 8) called “5” in a particular CT/VT module. See the Introduction to AC Sources section at the beginning of this chapter for details.

It is possible to select the sum of all CT combinations. The first channel displayed is the CT to which all others are referred. For example, the selection “F1+F5” indicates the sum of each phase from channels “F1” and “F5,” scaled to whichever CT has the higher ratio. Selecting “None” hides the associated actual values.

The approach used to configure the AC sources consists of several steps; first step is to specify the information about each CT and VT input. For CT inputs, this is the nominal primary and secondary current. For VTs, this is the connection type, ratio and nominal secondary voltage. Once the inputs have been specified, the configuration for each source is entered, including specifying which CTs are summed together.

5.5.3.1 User selection of AC parameters for comparator elements

CT/VT modules automatically calculate all current and voltage parameters from the available inputs. Users must select the specific input parameters to be measured by every element in the relevant settings menu. The internal design of the element specifies which type of parameter to use and provides a setting for source selection. In elements where the parameter can be either fundamental or RMS magnitude, such as phase time overcurrent, two settings are provided. One setting specifies the source, the second setting selects between fundamental phasor and RMS.

5.5.3.2 AC input actual values

The calculated parameters associated with the configured voltage and current inputs are displayed in the current and voltage sections of actual values. Only the phasor quantities associated with the actual AC physical input channels display here. All parameters contained within a configured source are displayed in the sources section of the actual values.

5.5.3.3 Disturbance detectors (internal)

The disturbance detector (ANSI 50DD) element is a sensitive current disturbance detector that detects any disturbance on the protected system. The 50DD function is used directly in some elements in the relay, for example VT Fuse Failure detector or Fault Report. It can also be used to supervise current-based elements to prevent maloperation as a result of the wrong settings or external CT wiring problem. A disturbance detector is provided for each source.

The 50DD function responds to the changes in magnitude of the sequence currents. The disturbance detector logic is as follows.

Figure 5-62: Disturbance detector logic

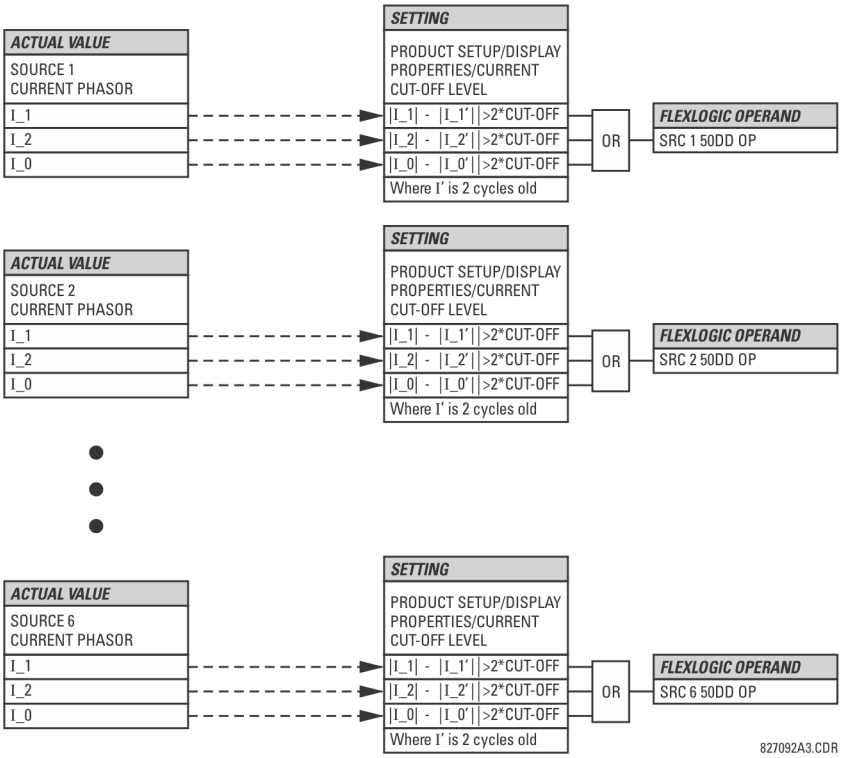

The disturbance detector responds to the change in currents of twice the current cut-off level. The default cut-off threshold is 0.02 pu; thus by default the disturbance detector responds to a change of 0.04 pu. The metering sensitivity setting (**PRODUCT SETUP ⇨⇩ DISPLAY PROPERTIES ⇨⇩ CURRENT CUT-OFF LEVEL**) controls the sensitivity of the disturbance detector accordingly.

5.5.3.4 Example for use of sources

An example of the use of sources is shown in the following figure. A relay can have the following hardware configuration:

	Increasing slot position letter -->		
UR	**CT/VT module 1**	**CT/VT module 2**	**CT/VT module 3**
B30, B90, C70, F35, N60, T35	8 CTs	4 CTs, 4 VTs	4 CTs, 4 VTs
C60, D60, G30, G60, L30, L90, M60, T60	CTs	VTs	not applicable

This configuration can be used on a two-winding transformer, with one winding connected into a breaker-and-a-half system. The following figure shows the arrangement of sources used to provide the functions required in this application, and the CT/VT inputs that are used to provide the data.

Figure 5-63: Example of use of sources

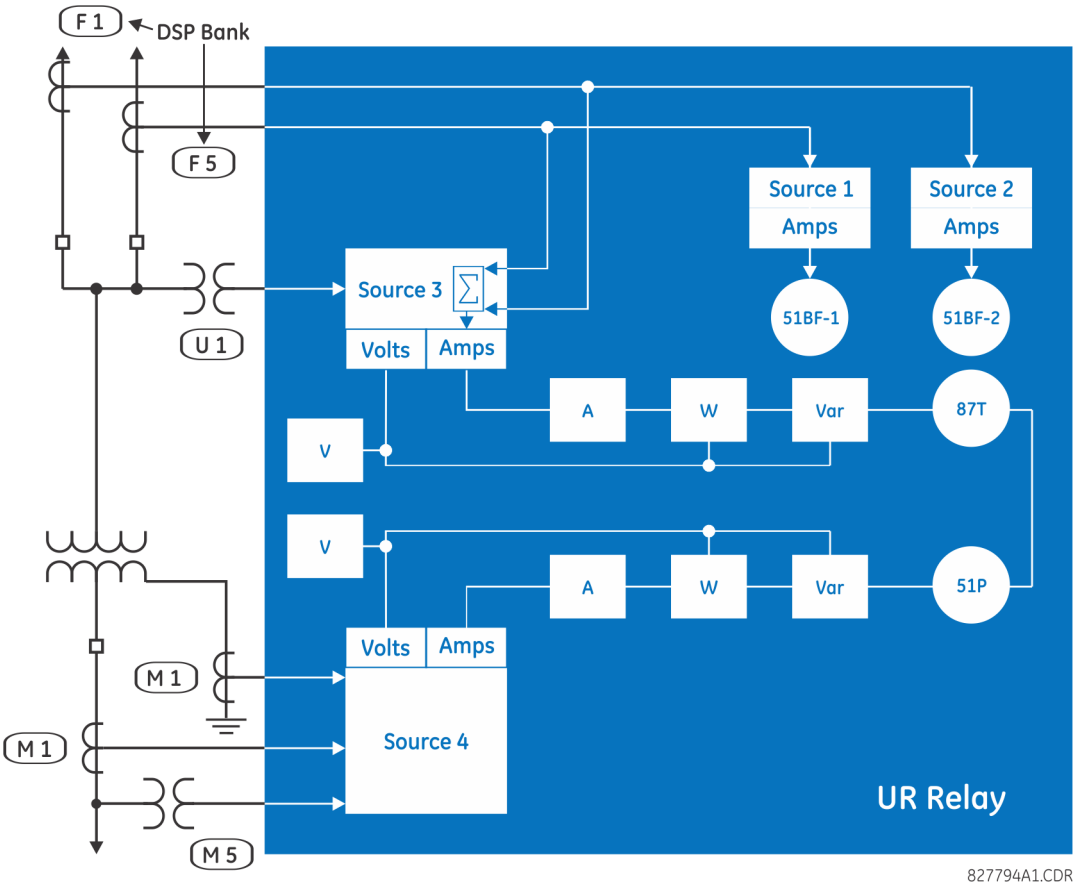

	Y LV	D HV	AUX
	SRC 1	SRC 2	SRC 3
Phase CT	M1	F1+F5	None
Ground CT	M1	None	None
Phase VT	M5	None	None
Aux VT	None	None	U1

5.5.4 87L power system

5.5.4.1 Menu

SETTINGS ⇨⇩ SYSTEM SETUP ⇨⇩ 87L POWER SYSTEM

■ 87L POWER SYSTEM ■	⇔	NUMBER OF TERMINALS: 2	Range: 2, 3
	⇕	NUMBER OF CHANNELS: 1	Range: 1, 2
	⇕	CHARGING CURRENT COMPENSATN: Disabled	Range: Disabled, Enabled
	⇕	POS SEQ CAPACITIVE REACTANCE: 0.100 kΩ	Range: 0.100 to 65.535 kΩin steps of 0.001

⇕	**ZERO SEQ CAPACITIVE REACTANCE: 0.100 kΩ**	Range: 0.100 to 65.535 kΩ in steps of 0.001
⇕	**ZERO SEQ CURRENT REMOVAL: Disabled**	Range: Disabled, Enabled
⇕	**LOCAL RELAY ID NUMBER: 0**	Range: 0 to 255 in steps of 1
⇕	**TERMINAL 1 RELAY ID NUMBER: 0**	Range: 0 to 255 in steps of 1
⇕	**TERMINAL 2 RELAY ID NUMBER: 0**	Range: 0 to 255 in steps of 1
⇕	**CHNL ASYM COMP: Off**	Range: FlexLogic operand
⇕	**BLOCK GPS TIME REF: Off**	Range: FlexLogic operand
⇕	**MAX CHNL ASYMMETRY: 1.5 ms**	Range: 0.0 to 10.0 ms in steps of 0.1
⇕	**ROUND TRIP TIME CHANGE: 1.5 ms**	Range: 0.0 to 10.0 ms in steps of 0.1
⇑	■ **IN-ZONE** ■ **TRANSFORMER**	See page 5-149

NOTE

Any changes to the L90 power system settings change the protection system configuration. As such, the 87L protection at all L90 protection system terminals must be temporarily disabled to allow the relays to acknowledge the new settings.

5

NUMBER OF TERMINALS — This setting is the number of terminals of the protected line.

NUMBER OF CHANNELS — This setting corresponds to the communications module installed. If the relay is applied on two terminal lines with a single communications channel, select "1." For a two-terminal line with a second redundant channel for increased dependability, or for three terminal line applications, select "2."

CHARGING CURRENT COMPENSATION — This setting enables and disables the charging current calculations and corrections of current phasors. The voltage signals used for charging current compensation are taken from the source assigned with the **CURRENT DIFF SIGNAL SOURCE 1** setting. As such, it is critical to ensure that three-phase line voltage is assigned to this source. The figure shows possible configurations.

Figure 5-64: Charging current compensation configurations

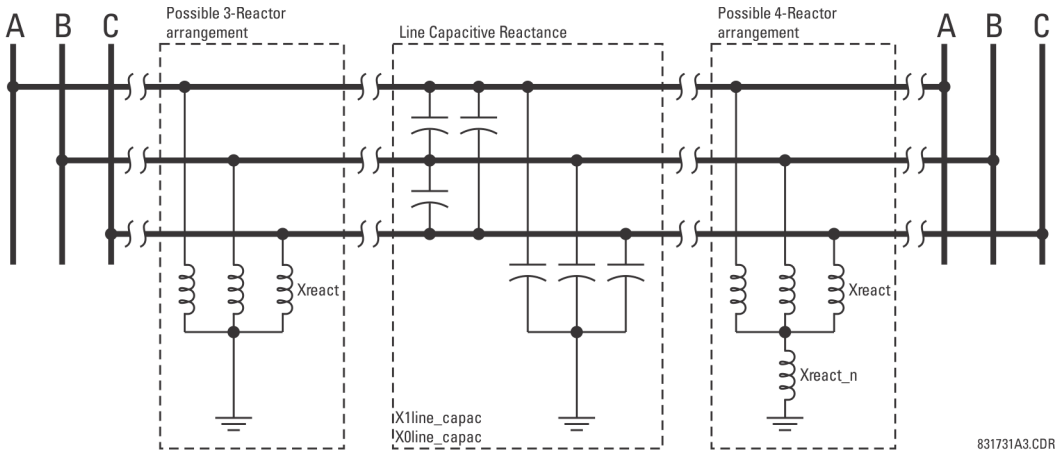

POSITIVE and **ZERO SEQUENCE CAPACITIVE REACTANCE** — The values of positive and zero-sequence capacitive reactance of the protected line are required for charging current compensation calculations. The line capacitive reactance values are entered in primary kilo-ohms for the total line length.

If shunt reactors are also installed on the line, the resulting value entered in the **POS SEQ CAPACITIVE REACTANCE** and **ZERO SEQ CAPACITIVE REACTANCE** settings are calculated as follows:

Three-reactor arrangement — Three identical line reactors (X_{react}) solidly connected phase to ground:

$$X_{C1} = \frac{X_{1line_capac} \cdot X_{react}}{X_{react} - X_{1line_capac}} \quad , X_{C0} = \frac{X_{0line_capac} \cdot X_{react}}{X_{react} - X_{0line_capac}}$$

Eq. 5-8

Four-reactor arrangement — Three identical line reactors (X_{react}) wye-connected with the fourth reactor (X_{react_n}) connected between reactor-bank neutral and the ground.

$$X_{C1} = \frac{X_{1line_capac} \cdot X_{react}}{X_{react} - X_{1line_capac}} \quad , X_{C0} = \frac{X_{0line_capac} \cdot (X_{react} + 3X_{react_n})}{X_{react} + 3X_{react_n} - X_{0line_capac}}$$

Eq. 5-9

where

X_{1line_capac} = the total line positive-sequence capacitive reactance

X_{0line_capac} = the total line zero-sequence capacitive reactance

X_{react} = the total reactor inductive reactance per phase. If identical reactors are installed at both line ends, the value of the inductive reactance is divided by 2 (or 3 for a three-terminal line) before use in the previous equations. If the reactors installed at both ends of the line are different, the following equations apply:

5

For two terminal line:

$$X_{react} = 1 / \left(\frac{1}{X_{react_terminal1}} + \frac{1}{X_{react_terminal2}} \right)$$

Eq. 5-10

For three terminal line:

$$X_{react} = 1 / \left(\frac{1}{X_{react_terminal1}} + \frac{1}{X_{react_terminal2}} + \frac{1}{X_{react_terminal3}} \right)$$

Eq. 5-11

where

X_{react_n} = the total neutral reactor inductive reactance. If identical reactors are installed at both line ends, the value of the inductive reactance is divided by 2 (or 3 for a three-terminal line) before use in the previous equations. If the reactors installed at both ends of the line are different, the following equations apply:

For two terminal line:

$$X_{react_n} = 1 / \left(\frac{1}{X_{react_n_terminal1}} + \frac{1}{X_{react_n_terminal2}} \right)$$

Eq. 5-12

For three terminal line:

$$X_{react_n} = 1 / \left(\frac{1}{X_{react_n_terminal1}} + \frac{1}{X_{react__n_terminal2}} + \frac{1}{X_{react_n_terminal3}} \right)$$

Eq. 5-13

NOTE

Charging current compensation calculations need to be performed for an arrangement where the VTs are connected to the line side of the circuit. Otherwise, opening the breaker at one end of the line causes a calculation error.

Differential current is significantly decreased when **CHARGING CURRENT COMPENSATION** is "Enabled" and the proper reactance values are entered. The effect of charging current compensation is viewed in the **METERING ⇨⇩ 87L DIFFERENTIAL CURRENT** actual values menu. This effect is very dependent on CT and VT accuracy.

ZERO-SEQUENCE CURRENT REMOVAL — This setting facilitates application of the L90 to transmission lines with one or more tapped transformers without current measurement at the taps. If the tapped transformer is connected in a grounded wye on the line side, it becomes a source of the zero-sequence current for external ground faults. As the transformer current is not measured by the L90 protection system, the zero-sequence current creates a spurious differential signal and can cause a false trip.

If enabled, this setting forces the L90 to remove zero-sequence current from the phase currents prior to forming their differential signals, ensuring protection stability on external ground faults. However, zero-sequence current removal can cause all three phases to trip for internal ground faults. Consequently, a phase selective operation of the L90 is not retained if the setting is enabled. This does not impose any limitation, as single-pole tripping is not recommended for lines with tapped transformers. See the Application of Settings chapter for guidelines.

LOCAL (TERMINAL 1 and TERMINAL 2) ID NUMBER — In installations using multiplexers or modems for communication, it is desirable to ensure the data used by the relays protecting a given line comes from the correct relays. The L90 performs this check by reading the ID number contained in the messages sent by transmitting relays and comparing this ID to the programmed correct ID numbers by the receiving relays. This check is used to block the differential element of a relay, if the channel is inadvertently set to loopback mode, by recognizing its own ID on a received channel. If an incorrect ID is found on a either channel during normal operation, the FlexLogic operand 87 CH1(2) ID FAIL is set, driving the event with the same name. The result of channel identification is also available in **ACTUAL VALUES ⇨ STATUS ⇨⇩ CHANNEL TESTS ⇨⇩ VALIDITY OF CHANNEL CONFIGURATION** for commissioning purposes. The default value "0" as the local relay ID setting indicates that the channel ID number is not to be checked. See the Current Differential section in this chapter for additional information.

For two-terminal applications, use the **LOCAL ID NUMBER** and **TERMINAL 1 ID NUMBER**. For three-terminal applications, also use the **TERMINAL 2 ID NUMBER**.

CHNL ASYM COMP — This setting enables/disables channel asymmetry compensation. The compensation is based on absolute time referencing provided by GPS-based clocks via the Precision Time Protocol or IRIG-B. Use this feature on multiplexed channels where channel asymmetry can be expected and which otherwise causes errors in current differential calculations. The feature takes effect when all terminals are provided with reliable GPS clock signals. If the GPS clock signal is lost at any terminal of the current differential protection system, or the real time clock not configured, then the compensation is not calculated. If the compensation is in place prior to losing the GPS time reference, the last (memorized) correction is applied as long as the value of **CHNL ASYM COMP** is "On." See the Application of Settings chapter for information.

The GPS-based compensation for channel asymmetry can take three different effects:

- If the **CHNL ASYM COMP** selected FlexLogic operand is "Off," compensation is not applied and the L90 uses only the ping-pong technique.
- If the **CHNL ASYM COMP** selected FlexLogic operand is "On" and all terminals have a valid time reference, then compensation is applied and the L90 effectively uses GPS time referencing tracking channel asymmetry if the latter fluctuates.
- If **CHNL ASYM COMP** is "On" and not all terminals have a valid time reference, then compensation is not applied (if the system was not compensated prior to the problem), or the memorized (last valid) compensation is used if compensation was in effect prior to the problem.

A terminal is considered to have a valid time reference while the **BLOCK GPS TIME REF** selected FlexLogic operand is Off and the internal signal **LOCAL GPS TROUBLE** is Off. The **LOCAL GPS TROUBLE** signal is On if the real time clock is not locked to global time via PP, PTP, or DC Shift IRIG-B. It is also On if locked via Amplitude Modulated IRIG-B, and if locked via PP or PTP and indicated clock accuracy is less than 250 µs.

The **CHNL ASYM COMP** setting dynamically turns the GPS compensation on and off. A FlexLogic operand that combines several factors typically is used. The L90 protection system does not incorporate any pre-defined way of treating certain conditions, such as failure of the GPS receiver, loss of satellite signal, channel asymmetry prior to the loss of reference time, or change of the round trip time prior to loss of the time reference. Virtually any philosophy can be programmed by selecting the **CHNL ASYM COMP** setting. Factors to consider are:

- **Fail-safe output of the GPS receiver** — Some receivers can be equipped with the fail-safe output relay. The L90 system requires a maximum error of 250 µs. The fail-safe output of the GPS receiver can be connected to the local L90 via an input contact. In the case of GPS receiver fail, the channel compensation function can be effectively disabled by using the input contact in conjunction with the **BLOCK GPS TIME REF** setting.
- **Channel asymmetry prior to losing the GPS time reference** — This value is measured by the L90 and a user-programmable threshold is applied to it. The corresponding FlexLogic operands are produced if the asymmetry is above the threshold (87L DIFF 1 MAX ASYM and 87L DIFF 2 MAX ASYM). These operands can be latched in FlexLogic and combined with other factors to decide, upon GPS loss, if the relays continue to compensate using the memorized correction. Typically, one decides to keep compensating if the pre-existing asymmetry is low.
- **Change in the round trip travel time** — This value is measured by the L90 and a user-programmable threshold applied to it. The corresponding FlexLogic operands are produced if the delta change is above the threshold (87L DIFF 1 TIME CHNG and 87L DIFF 2 TIME CHNG). These operands can be latched in FlexLogic and combined with other factors to decide, upon GPS loss, if the relays continue to compensate using the memorized correction. Typically, one decides to disable compensation if the round trip time changes.

BLOCK GPS TIME REF — This setting signals to the L90 that the time reference is not valid, for example due to problems with the GPS receiver. Be aware of the case when a GPS satellite receiver loses its satellite signal and reverts to its own calibrated crystal oscillator. In this case, accuracy degrades in time and can eventually cause relay misoperation. Verification from the receiver manufacturer of accuracy not worse than 250 µs and the presence of an alarm contact indicating loss of the satellite signal is strongly recommended. If the time reference accuracy cannot be guaranteed, relay this to the L90 via contact inputs and block GPS compensation using the contact position in conjunction with the **BLOCK GPS TIME REF** setting. This setting is typically a signal from the GPS receiver signaling problems or time inaccuracy.

Some GPS receivers supply erroneous IRIG-B signals during power-up and before locking to satellites. If the receiver's failsafe contact opens during power-up (allowing for an erroneous IRIG-B signal), then set a dropout delay up to 15 minutes (depending on GPS receiver specifications) to the failsafe contact via FlexLogic to prevent incorrect relay response.

MAX CHNL ASYMMETRY — This setting detects excessive channel asymmetry. The same threshold is applied to both channels, while the per-channel 87L DIFF 1 MAX ASYM and 87L DIFF 2 MAX ASYM FlexLogic operands are generated. These operands can be used to alarm on problems with communication equipment and/or to decide whether channel asymmetry compensation remains in operation if the GPS-based time reference is lost. Channel asymmetry is measured if both terminals of a given channel have valid time reference.

If the memorized asymmetry value is much greater than expected (indicating a significant problem with GPS clock timing), then this operand also can be used to block GPS compensation, forcing the relay to use the memorized asymmetry value.

ROUND TRIP TIME CHANGE — This setting detects changes in round-trip time. This threshold is applied to both channels, while the 87L DIFF 1 TIME CHNG and 87L DIFF 2 TIME CHNG ASYM per-channel FlexLogic operands are generated. These operands can be used to alarm on problems with communication equipment and/or to decide whether channel asymmetry compensation remains in operation if the GPS-based time reference is lost.

LOCAL GPS TROUBLE — This internal signal is On when any of the following conditions are present:

- The best clock selector (BCS) selection is none or SNTP
- The BCS selection is IRIG-B and the **IRIG-B SIGNAL TYPE** setting is Amplitude Modulated
- The RTC and/or the synchrophasor clock are not synchronized to the selected synchronizing source. This can possibly occur on power-up, when transferring between sources, and when the selected source's holdover timer times out.
- The quality bits in the messages from a PTP source used for synchronizing indicate worst-case error greater than 250 µs, or accuracy less than 250 µs, or unknown accuracy/error (that is, not locked to an international time standard). Apply two security counts (2 seconds) to both set and reset of this operand when change is based on accuracy. There is no corresponding quality test for IRIG-B sources here.

Figure 5-65: Channel asymmetry compensation logic

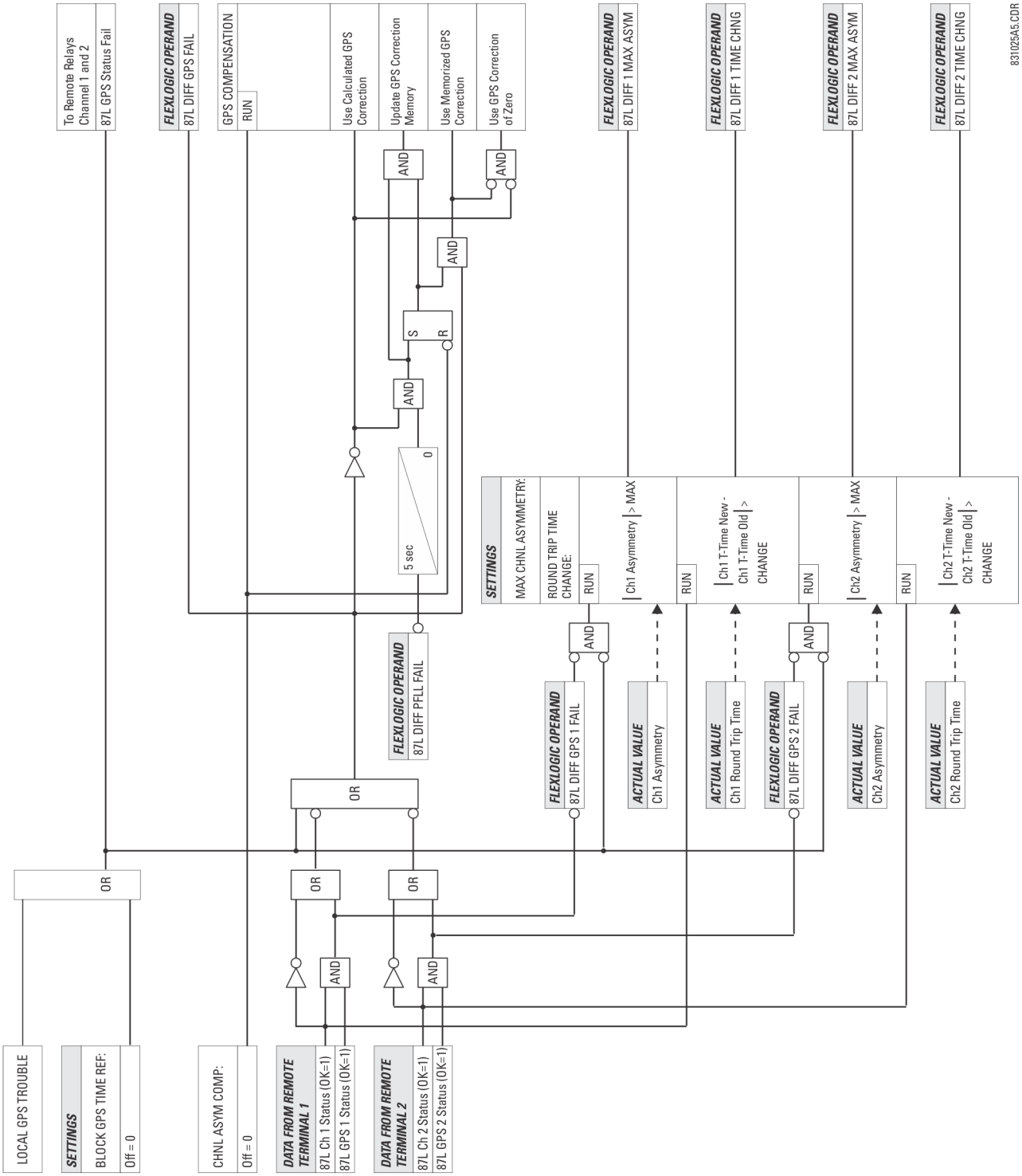

5.5.4.2 In-zone transformer

SETTINGS ⇨⇩ SYSTEM SETUP ⇨⇩ 87L POWER SYSTEM ⇨⇩ IN-ZONE TRANSFORMER

■ IN-ZONE ■ TRANSFORMER	⇔	**IN-ZONE TRANSFORMER CONNECTION: None**	Range: None, 0 to 330° lag in steps of 30°

⇧ **TRANSFORMER LOCATION: Local-Tap** Range: Local-Tap, Rem1-Tap, Rem2-Tap

The L90 is provided with this optional feature, specified as an option at the time of ordering. Using the order code for your device, see the order codes in chapter 2 for details.

These settings ensure that the 87L element correctly applies magnitude and phase compensation for the in-zone transformer. To accommodate for the difference in CT ratios at line terminals, use the **SETTINGS ⇨⇩ GROUPED ELEMENTS ⇨ SETTING GROUP 1(6) ⇨ LINE DIFFERENTIAL ELEMENTS ⇨ CURRENT DIFFERENTIAL ⇨⇩ CURRENT DIFF CT TAP** setting. It is important to properly program the in-zone transformer setting for all terminals to ensure correct 87L performance.

IN-ZONE TRANSFORMER CONNECTION — This setting indicates the presence and group connection of the in-zone transformer. The winding angle selection specifies the phase shift of the remote terminal side winding with respect to the local terminal side winding. For example, for the Dy1 group where the delta winding is connected to the local terminal side, and wye winding is connected to the remote terminal side, you select “30° lag” for the local terminal side. (At the remote terminal relay, select “330° lag” for this transformer group connection.) If there is no in-zone transformer connected, then program this setting as “None” (note that the “0° lag” value does not correspond to “None”). Only one in-zone transformer is allowed for both two-terminal and three-terminal applications. Enabling in-zone transformer functionality forces the L90 to automatically remove the zero-sequence component from all terminals currents. It also disables ground differential 87LG functionality and zero-sequence current removal functionality defined by the **ZERO SEQ CURRENT REMOVAL** setting.

Do not set the **IN-ZONE TRANSFORMER CONNECTION** setting to "None" at one terminal and set other terminals to a value other than "None." 87L is blocked under these circumstances.

The In-Zone Transformer software option enables line differential devices to support a power transformer between line terminals. If there is no power transformer between terminals, none of the L90 relays should have the In-zone transformer software option. UR firmware versions 6.06, 7.20, and later allow using devices with In-Zone Tx on one terminal and without In-Zone Tx on the other terminals on schemes with no power transformer between line terminals, provided devices with In-Zone Tx are set to "TX connection = None."

TRANSFORMER LOCATION — This setting selects the transformer location and applies only when the **IN-ZONE TRANSFORMER CONNECTION** setting is other than “None.”

Select the “Local-Tap” value if the transformer is present between the local terminal and the tap point or for two-terminal applications.

Select “Rem1-Tap” if the transformer is present between remote terminal 1 and the tap point.

Select “Rem2-Tap” if the transformer is present between remote terminal 2 and the tap point.

Figure 5-66: Illustration of in-zone transformer for two-terminal and three-terminal lines

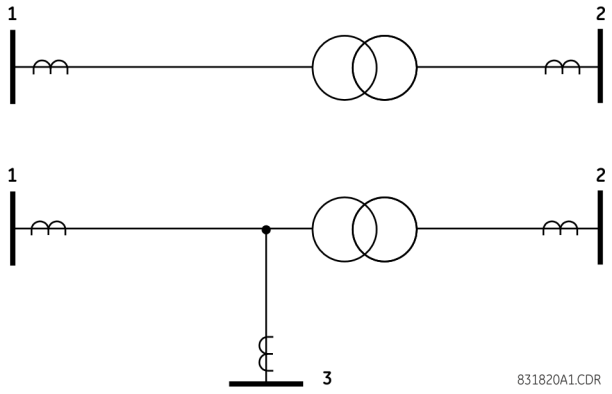

When the L90 ordered has in-zone functionality, it does not support the multi-ended fault locator.

5.5.5 Breakers

SETTINGS ⇨⇩ SYSTEM SETUP ⇨⇩ BREAKERS ⇨ BREAKER 1(4)

■ BREAKER 1 ■	⇔	BREAKER 1 FUNCTION: Disabled	Range: Disabled, Enabled
	⇕	BREAKER1 PUSH BUTTON CONTROL: Disabled	Range: Disabled, Enabled
	⇕	BREAKER 1 TAGGING: Disabled	Range: Disabled, Enabled
	⇕	BREAKER 1 SUBSTITUTN: Disabled	Range: Disabled, Enabled
	⇕	BREAKER 1 BYPASS: Disabled	Range: Disabled, Enabled
	⇕	BREAKER 1 AR BLOCK: Disabled	Range: Disabled, Enabled
	⇕	BREAKER 1 NAME: Bkr 1	Range: up to six alphanumeric characters
	⇕	BREAKER 1 MODE: 3-Pole	Range: 3-Pole, 1-Pole
	⇕	BREAKER 1 OPEN: Off	Range: FlexLogic operand
	⇕	BREAKER 1 BLK OPEN: Off	Range: FlexLogic operand
	⇕	BREAKER 1 CLOSE: Off	Range: FlexLogic operand
	⇕	BREAKER 1 BLK CLOSE: Off	Range: FlexLogic operand
	⇕	BREAKER1 ΦA/3P CLSD: Off	Range: FlexLogic operand
	⇕	BREAKER1 ΦA/3P OPND: Off	Range: FlexLogic operand
	⇕	BREAKER 1 ΦB CLOSED: Off	Range: FlexLogic operand
	⇕	BREAKER 1 ΦB OPENED: Off	Range: FlexLogic operand
	⇕	BREAKER 1 ΦC CLOSED: Off	Range: FlexLogic operand
	⇕	BREAKER 1 ΦC OPENED: Off	Range: FlexLogic operand
	⇕	BREAKER 1 TOPERATE: 70 ms	Range: 0 to 65535 s in steps of 1
	⇕	BREAKER 1 EXT ALARM: Off	Range: FlexLogic operand
	⇕	BREAKER 1 ALARM DELAY: 0.000 s	Range: 0.000 to 65.535 s in steps of 0.001
	⇕	MANUAL CLOSE RECAL1 TIME: 0.000 s	Range: 0.000 to 65.535 s in steps of 0.001
	⇕	BREAKER 1 OPEN SEAL-IN: 0.000 s	Range: 0.000 to 65.535 s in steps of 0.001

⇕	**BREAKER 1 OUT OF SV: Off**	Range: FlexLogic operand
⇕	**BREAKER 1 RACKED-IN: Off**	Range: FlexLogic operand
⇧	**BREAKER 1 EVENTS: Disabled**	Range: Disabled, Enabled

The breaker control element contains the auxiliary logic for status and serves as the interface for opening and closing of a circuit breaker from protection, autoreclose, SCADA, or through the front panel interface. The breaker control element can be used to create interlocking functionality. For greater security in determination of the breaker position, both the 52/a and 52/b auxiliary contacts are used with reporting of the discrepancy between them.

To use this element, configure the contact outputs that trip and close the breaker to use FlexLogic operands BREAKER 1 OFF CMD (or BREAKER 1 TRIP A/B/C in the case of single-pole tripping) and BREAKER 1 ON CMD, and configure the breaker control element inputs as described here.

A description of the operation of the breaker control and status monitoring features from the front panel is provided in chapter 4.

NOTE

Breaker control element 1 and Breaker control element 2 are permanently attached to Autoreclose element functions BKR1 and BKR2 respectively.

NOTE

Breaker control element 1 is permanently attached to the Trip Output element.

5

There are two breaker control elements for each CT/VT module installed. The following settings are available for each breaker control element.

BREAKER 1 FUNCTION — This setting enables and disables the operation of the breaker 1 control feature.

BREAKER1 PUSH BUTTON CONTROL — Set to “Enable” to allow front panel pushbutton open/close control operations.

BREAKER1 TAGGING — Set to "Enable" to allow the graphical front panel to tag breaker 1. When tagged, the following operations are disabled: pushbutton open/close, IEC 61850 open/close, autoreclose command issued by the autoreclose element, and close command initiated by **BREAKER 1 CLOSE** setting. The trip command issued by the Trip Out element or **BREAKER 1 OPEN** setting is not affected.

BREAKER1 SUBSTITUTN — Set to "Enable" to allow the graphical front panel to substitute breaker 1 status. When substituted, breaker 1 control open/close status is forced to the substituted value.

BREAKER1 BYPASS — Set to "Enable" to allow the graphical front panel to bypass breaker 1 interlocking. When asserted, **BREAKER 1 BLK OPEN** and **BREAKER 1 BLK CLOSE** settings are bypassed.

BREAKER1 AR BLOCK — Set to "Enable" to allow the graphical front panel to issue a BLOCK AR command and generate the BREAKER 1 BLK RCLS operand, which blocks the breaker 1 close command from the Autoreclose element.

The autoreclose element operates for BKR1 and BKR2 only.

Once **AR BLOCK** is asserted from the front panel, the breaker reclosing is not allowed. Note that the autoreclose element is not automatically inhibited by **BLOCK AR** from the front panel. If the autoreclose scheme needs to be inhibited, set setting **AR BLOCK BKR1** or **AR BLOCK** in the autoreclose element with the BREAKER 1 BLK RCLS operand.

BREAKER 1 NAME — Assign a user-defined name (up to six characters) to the breaker. This name is used in flash messages related to breaker 1.

BREAKER 1 MODE — Selects “3-Pole” mode, where all breaker poles are operated simultaneously, or “1-Pole” mode where all breaker poles are operated either independently or simultaneously.

BREAKER 1 OPEN — Selects an operand that when activated, and unless blocked, initiates the Breaker 1 open and individual phase trip commands.

BREAKER 1 BLK OPEN — Selects an operand that prevents initiation of Breaker 1 open and individual phase trip commands. This setting can be used for blocking circuit breaker tripping for instance when breaker monitoring detects conditions such as low SF_6 gas density during which breaker opening can cause damage.

BREAKER 1 CLOSE — Selects an operand that when activated, and unless blocked, initiates the Breaker 1 close commands.

BREAKER 1 BLK CLOSE — Selects an operand that prevents initiation of Breaker 1 close commands. This setting can be used for blocking circuit breaker closing, for instance to prevent closing into a closed ground switch.

BREAKER1 ΦA/3P CLSD — Selects an operand, usually a contact input connected to a breaker auxiliary position tracking mechanism. This input is for a normally-open 52/a status input that creates a logic 1 when the breaker is closed. If the **BREAKER 1 MODE** setting is selected as "3-Pole," this setting selects a single 52/a input as the operand used to track the breaker open or closed position. If the mode is selected as "1-Pole," the input mentioned is used to track phase A and the **BREAKER 1 ΦB** and **BREAKER 1 ΦC** settings select operands to track phases B and C, respectively.

BREAKER1 ΦA/3P OPND — Selects an operand, usually a contact input, that is for a normally-closed 52/b status input that creates a logic 1 when the breaker is open. If a separate 52/b contact input is not available, then the inverted 52/a status signal or the inverted **BREAKER 1 CLOSED** status signal can be used.

BREAKER 1 ΦB CLOSED — If the mode is selected as three-pole, this setting has no function. If the mode is selected as single-pole, this input is used to track the breaker phase B closed position as outlined for phase A.

BREAKER 1 ΦB OPENED — If the mode is selected as three-pole, this setting has no function. If the mode is selected as single-pole, this input is used to track the breaker phase B opened position as outlined for phase A.

BREAKER 1 ΦC CLOSED — If the mode is selected as three-pole, this setting has no function. If the mode is selected as single-pole, this input is used to track the breaker phase C closed position as outlined for phase A.

BREAKER 1 ΦC OPENED — If the mode is selected as three-pole, this setting has no function. If the mode is selected as single-pole, this input is used to track the breaker phase C opened position as outlined for phase A.

BREAKER 1 TOPERATE — This setting specifies the required interval to overcome transient disagreement between the 52/a and 52/b auxiliary contacts during breaker operation. If transient disagreement still exists after this time has expired, the BREAKER 1 BAD STATUS FlexLogic operand is asserted for alarm or blocking purposes.

BREAKER 1 EXT ALARM — This setting selects an operand, usually an external contact input connected to a breaker alarm reporting contact. While the selected operand is active, the BREAKER 1 TROUBLE operand is activated.

BREAKER 1 ALARM DELAY — This setting specifies the delay interval during which a disagreement of status among the three-pole position tracking operands does not declare a pole disagreement. This allows for non-simultaneous operation of the poles.

If single-pole tripping and reclosing is used, the breaker can trip unsymmetrically for faults. In this case, the minimum alarm delay setting must exceed the maximum time required for fault clearing and reclosing by a suitable margin.

BREAKER 1 OPEN SEAL-IN — This setting specifies the seal-in time of the three-pole open command initiated by either the Trip Out element or a manual open command to the circuit breaker.

MANUAL CLOSE RECAL1 TIME — This setting specifies the seal-in time of the close commands due to an operator-initiated manual close command to the circuit breaker.

BREAKER 1 OUT OF SV — Selects an operand indicating that breaker 1 is out-of-service.

BREAKER 1 RACKED-IN — This setting selects a contact input to show whether the breaker is racked-in or racked-out. The racked-in or racked-out status is used to indicate dynamically the status of breaker symbol, only applied in the single-line diagram in the graphical front panel. If this setting is set to Off, the racked status is not considered.

NOTE

IEC 61850 functionality is permitted when the L90 device is in "Programmed" mode and not in local control mode.

Figure 5-67: Dual breaker control logic (Sheet 1 of 3)

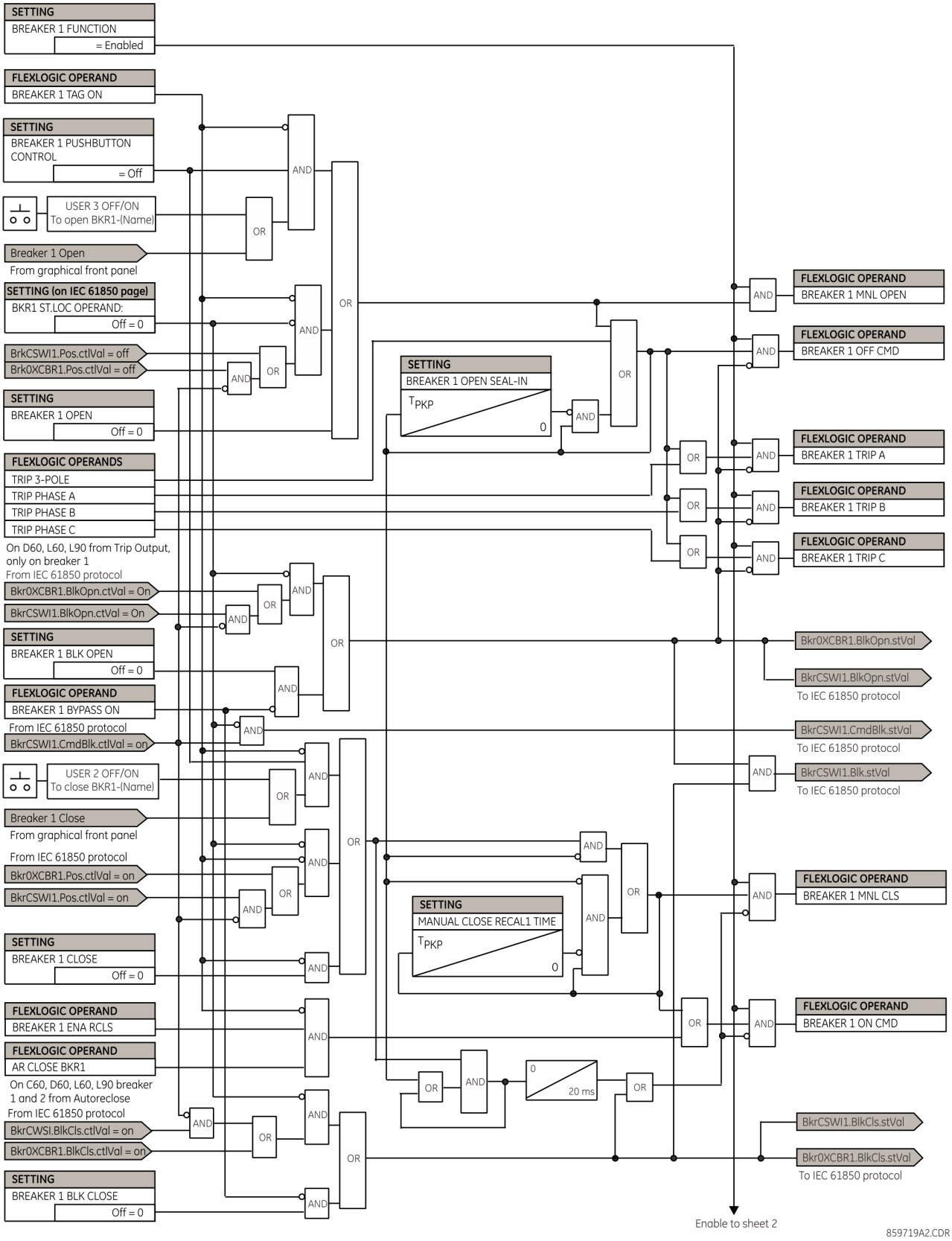

Figure 5-68: Dual breaker control logic (Sheet 2 of 3)

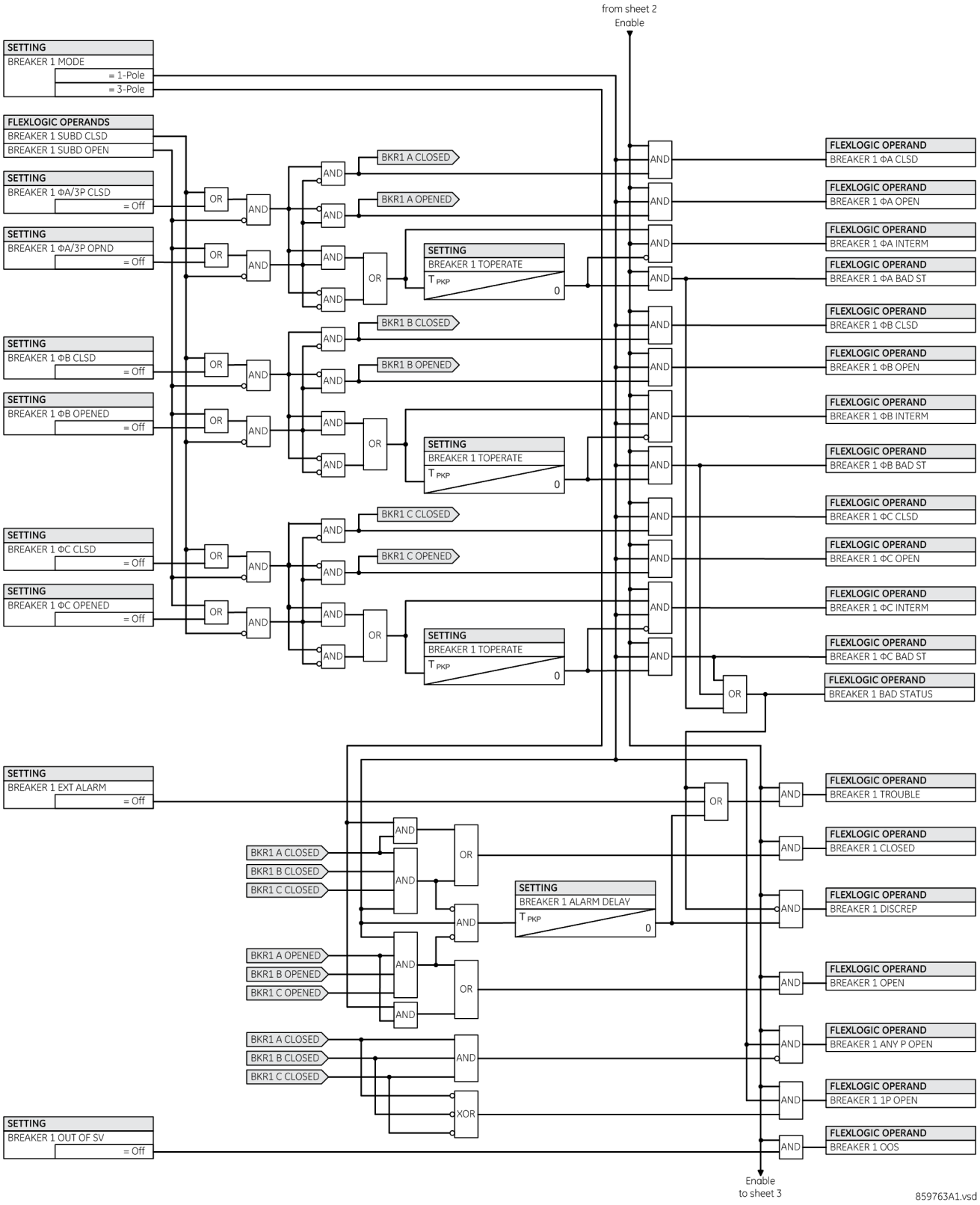

Figure 5-69: Dual breaker / graphical front panel control logic (Sheet 3 of 3)

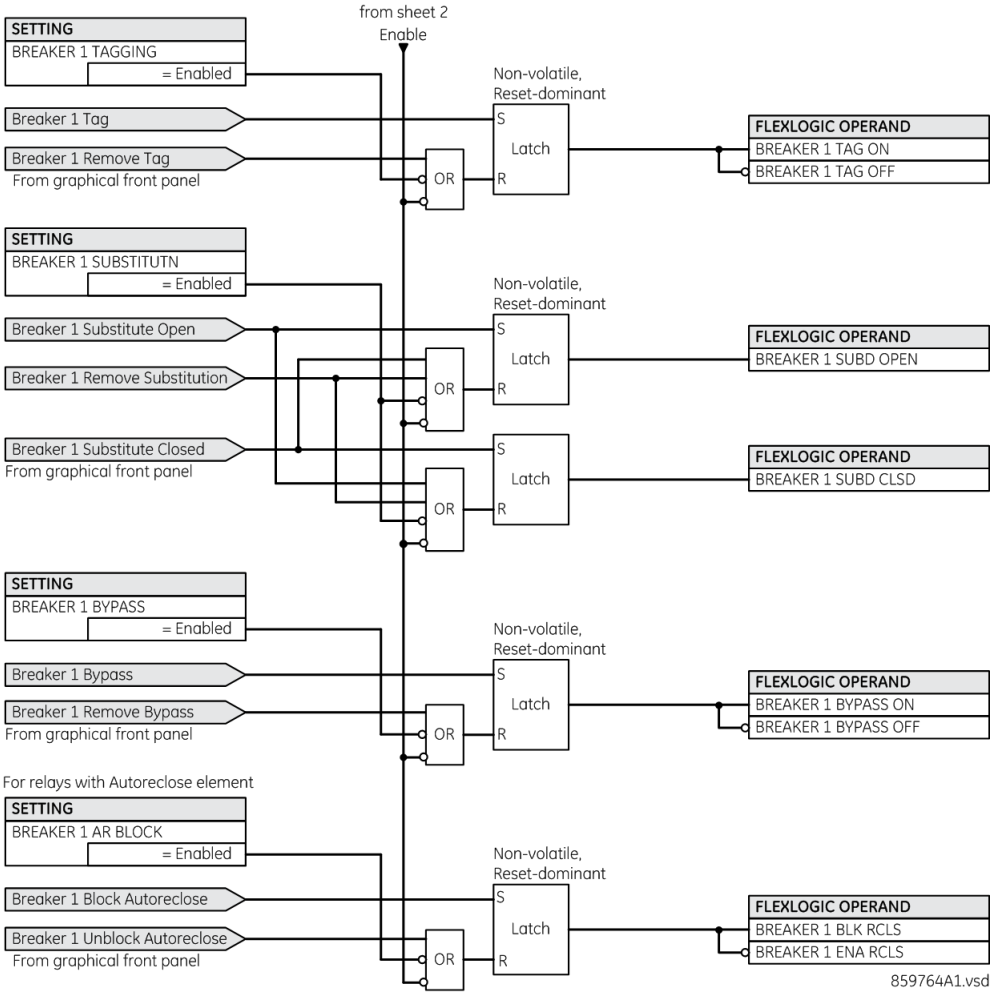

The breaker element has direct hard-coded connections to the IEC 61850 model as shown in the logic diagram. This allows remote open/close operation of each breaker, using either CSWI or XCBR IEC 61850 logical nodes. IEC 61850 select-before-operate functionality, local/remote switch functionality, along with blocking of open/close commands are provided. Note that the dwell time for the IEC 61850 trip and close commands shown is one protection pass only. To maintain the close/open command for a certain time, do so by setting the seal-in timers **BREAKER 1 OPEN SEAL-IN** and **MANUAL CLOSE RECAL1 TIME**, on the contact outputs using the "Seal-in" setting, in the Trip Output element, and/or in FlexLogic.

5.5.6 Disconnect switch control

SETTINGS ⇨⇩ SYSTEM SETUP ⇨⇩ SWITCHES ⇨⇩ SWITCH 1(24)

■ SWITCH 1 ■	⇔	SWITCH 1 FUNCTION: Disabled	Range: Disabled, Enabled
	⇩	SWITCH 1 NAME: SW 1	Range: up to six alphanumeric characters
	⇩	SWITCH 1 MODE: 3-Pole	Range: 3-Pole, 1-Pole
	⇩	SWITCH 1 OPEN: Off	Range: FlexLogic operand

⇕	**SWITCH 1 BLK OPEN: Off**	Range: FlexLogic operand
⇕	**SWITCH 1 CLOSE: Off**	Range: FlexLogic operand
⇕	**SWITCH 1 BLK CLOSE: Off**	Range: FlexLogic operand
⇕	**SWTCH 1 ΦA/3P CLSD: Off**	Range: FlexLogic operand
⇕	**SWTCH 1 ΦA/3P OPND: Off**	Range: FlexLogic operand
⇕	**SWITCH 1 ΦB CLOSED: Off**	Range: FlexLogic operand
⇕	**SWITCH 1 ΦB OPENED: Off**	Range: FlexLogic operand
⇕	**SWITCH 1 ΦC CLOSED: Off**	Range: FlexLogic operand
⇕	**SWITCH 1 ΦC OPENED: Off**	Range: FlexLogic operand
⇕	**SWITCH1 PUSH BUTTON CONTROL: Off**	Range: FlexLogic operand
⇕	**SWITCH 1 TAGGING: Disabled**	Range: Disabled, Enabled
⇕	**SWITCH 1 SUBSTITUTN: Disabled**	Range: Disabled, Enabled
⇕	**SWITCH 1 BYPASS: Disabled**	Range: Disabled, Enabled
⇕	**SWITCH 1 OPEN SEAL-IN: 0.000 s**	Range: 0.000 to 65.535 s in steps of 0.001
⇕	**SWITCH 1 CLOSE SEAL IN: 0.000 s**	Range: 0.000 to 65.535 s in steps of 0.001
⇕	**SWITCH 1 TOPERATE: 70 ms**	Range: 0 to 65535 ms in steps of 1
⇕	**SWITCH 1 ALARM DELAY: 0.000 s**	Range: 0.000 to 65.535 s in steps of 0.001
⇑	**SWITCH 1 EVENTS: Disabled**	Range: Disabled, Enabled

The disconnect switch control element contains the auxiliary logic for status and serves as the interface for opening and closing of disconnect switches from SCADA or through the front panel interface. The disconnect switch control element can be used to create interlocking functionality. For greater security in determination of the switch pole position, both the 89/a and 89/b auxiliary contacts are used with reporting of the discrepancy between them. There are eight disconnect switch control elements for each CT/VT module installed.

To use this element, configure the contact outputs that open and close the disconnect switch to use FlexLogic operands SWITCH 1 OFF CMD and SWITCH 1 ON CMD, and configure the disconnect switch control element's inputs as outlined here.

SWITCH 1 FUNCTION — This setting enables and disables operation of the disconnect switch element.

SWITCH 1 NAME — Assign a user-defined name (up to six characters) to the disconnect switch. This name is used in flash messages related to disconnect switch 1.

SWITCH 1 MODE — This setting selects “3-Pole” mode, where disconnect switch poles have a single common auxiliary switch, or “1-Pole” mode where each disconnect switch pole has its own auxiliary switch.

SWITCH 1 OPEN — This setting selects an operand that when activated, and unless blocked, initiates the disconnect switch 1 open command.

SWITCH 1 BLK OPEN — This setting selects an operand that prevents initiation of the disconnect switch 1 command. This setting can be used to block the disconnect switch from opening, for instance when switchyard monitoring indicates that current exceeding the switch's interrupting rating can be flowing through the switch.

SWITCH 1 CLOSE — This setting selects an operand that when activated, and unless blocked, initiates the disconnect switch 1 close command.

SWITCH 1 BLK CLOSE — This setting selects an operand that prevents initiation of disconnect switch 1 close commands. This setting can be used to block the disconnect switch from closing, for instance to prevent closing into a closed ground switch.

SWTCH 1 ΦA/3P CLSD — This setting selects an operand, usually a contact input connected to a disconnect switch auxiliary position tracking mechanism. This input is for a normally-open 89/a status input that creates a logic 1 when the disconnect switch is closed. If the **SWITCH 1 MODE** setting is selected as "3-Pole," this setting selects a single 89/a input as the operand used to track the disconnect switch open or closed position. If the mode is selected as "1-Pole," the input mentioned is used to track phase A and the **SWITCH 1 ΦB** and **SWITCH 1 ΦC** settings select operands to track phases B and C, respectively.

SWTCH 1 ΦA/3P OPND — This setting selects an operand, usually a contact input, that is for a normally-closed 89/b status input that creates a logic 1 when the disconnect switch is open. If a separate 89/b contact input is not available, then an inverted 89/a status signal can be used.

SWITCH 1 ΦB CLOSED — If the mode is selected as three-pole, this setting has no function. If the mode is selected as single-pole, this input is used to track the disconnect switch phase B closed position as outlined for phase A.

SWITCH 1 ΦB OPENED — If the mode is selected as three-pole, this setting has no function. If the mode is selected as single-pole, this input is used to track the disconnect switch phase B opened position as outlined for phase A.

SWITCH 1 ΦC CLOSED — If the mode is selected as three-pole, this setting has no function. If the mode is selected as single-pole, this input is used to track the disconnect switch phase C closed position as outlined for phase A.

SWITCH 1 ΦC OPENED — If the mode is selected as three-pole, this setting has no function. If the mode is selected as single-pole, this input is used to track the disconnect switch phase C opened position as outlined for phase A.

SWITCH 1 PUSH BUTTON CONTROL — Local disconnect switch control operations (for example, open/close) are allowed from front panel pushbuttons when the selected FlexLogic operand value is high.

SWITCH 1 TAGGING — Set to "Enable" to allow the graphical front panel to tag switch 1. When tagged, the following operations are disabled:

- Pushbutton Open/Close
- IEC 61850 Open/Close
- Open command initiated by **SWITCH 1 OPEN** setting
- Close command initiated by **SWITCH 1 CLOSE** setting

SWITCH 1 SUBSTITUTN — Set to "Enable" to allow the graphical front panel to substitute switch 1 status. When substituted, switch 1 control open/close status is forced to the substituted value.

SWITCH 1 BYPASS —Set to "Enable" to allow the graphical front panel to bypass switch 1 interlocking. When asserted, **SWITCH 1 BLK OPEN** and **SWITCH 1 BLK CLOSE** settings are bypassed.

SWITCH 1 OPEN SEAL-IN — This setting specifies the seal-in time of the open command due to an operator-initiated manual open command to the disconnect switch.

SWITCH 1 CLOSE SEAL-IN — This setting specifies the seal-in time of the close command due to an operator-initiated manual close command to the disconnect switch.

SWITCH 1 TOPERATE — This setting specifies the required interval to overcome transient disagreement between the 89/a and 89/b auxiliary contacts during disconnect switch operation. If transient disagreement still exists after this time has expired, the SWITCH 1 BAD STATUS FlexLogic operand is asserted for alarm or blocking purposes.

SWITCH 1 ALARM DELAY — This setting specifies the delay interval during which a disagreement of status among the pole position tracking operands do not declare a pole disagreement. This allows for non-simultaneous operation of the poles.

NOTE

IEC 61850 functionality is permitted when the L90 is in “Programmed” mode and not in local control mode.

The switch element has direct hard-coded connections to the IEC 61850 model as shown in the logic diagrams. This allows remote open/close operation of each switch, using either CSWI or XSWI IEC 61850 logical nodes. IEC 61850 select-before-operate functionality, local/remote switch functionality, along with blocking open/close commands are provided. Note that the dwell time for the IEC 61850 trip and close commands shown is one protection pass only. To maintain close/open command for a certain time, do so using the seal-in timers **SWITCH 1 OPEN SEAL-IN** and **SWITCH 1 CLOSE SEAL-IN**, on the contact outputs using the "Seal-in" setting, or in FlexLogic.

Figure 5-70: Disconnect switch control logic (sheet 1 of 3)

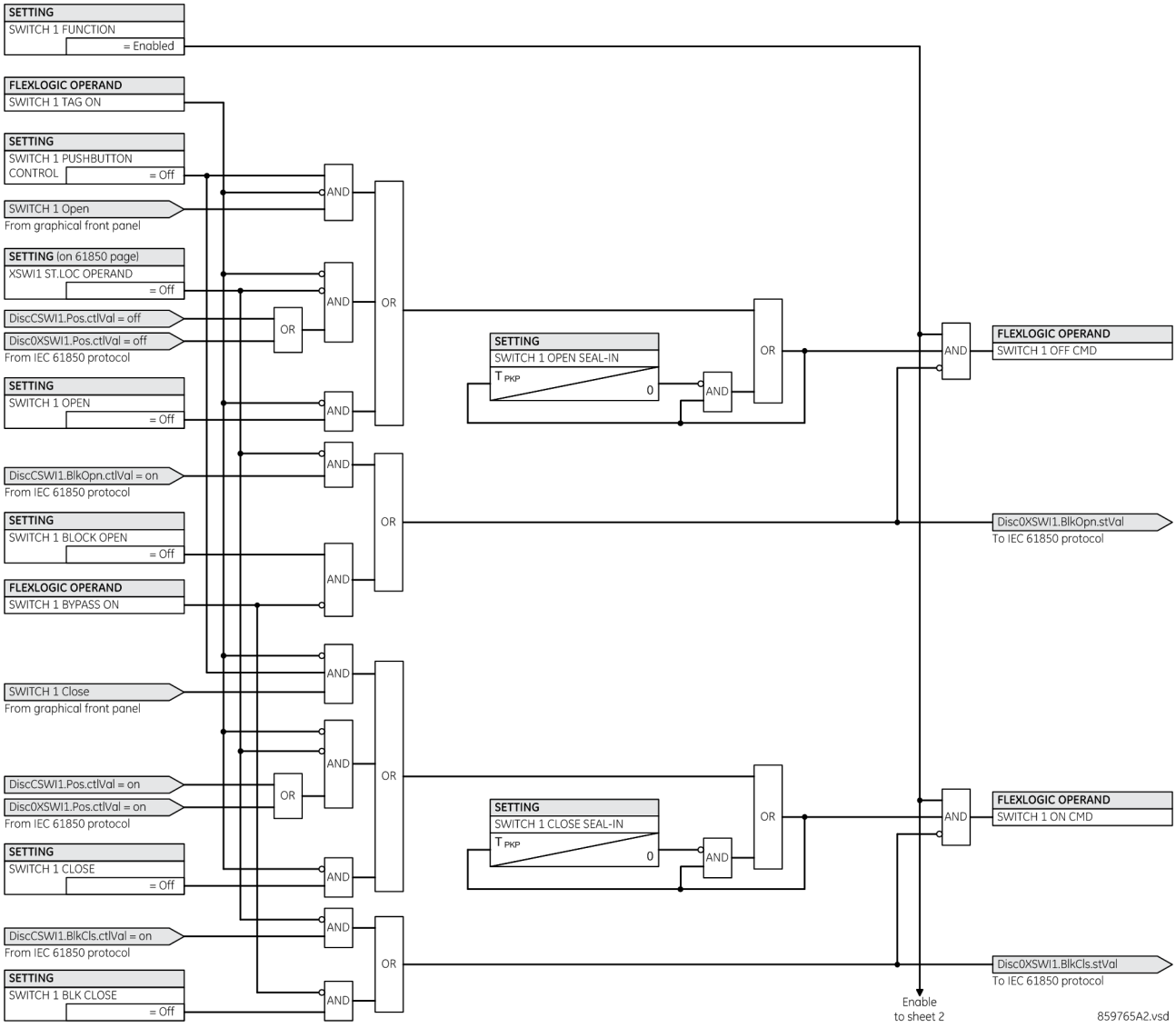

Figure 5-71: Disconnect switch control status logic (sheet 2 of 3)

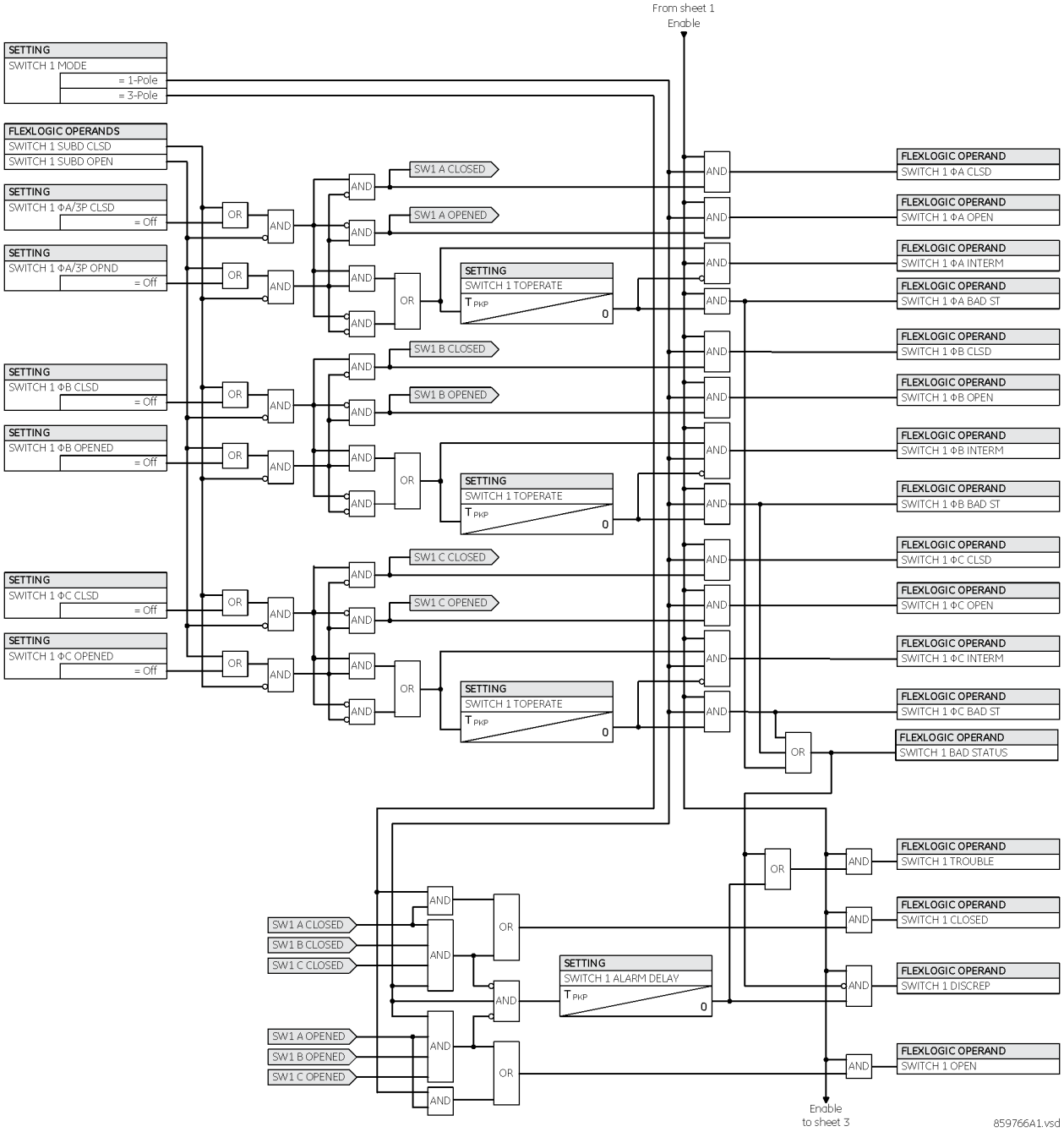

Figure 5-72: Disconnect switch control graphical front panel logic (sheet 3 of 3)

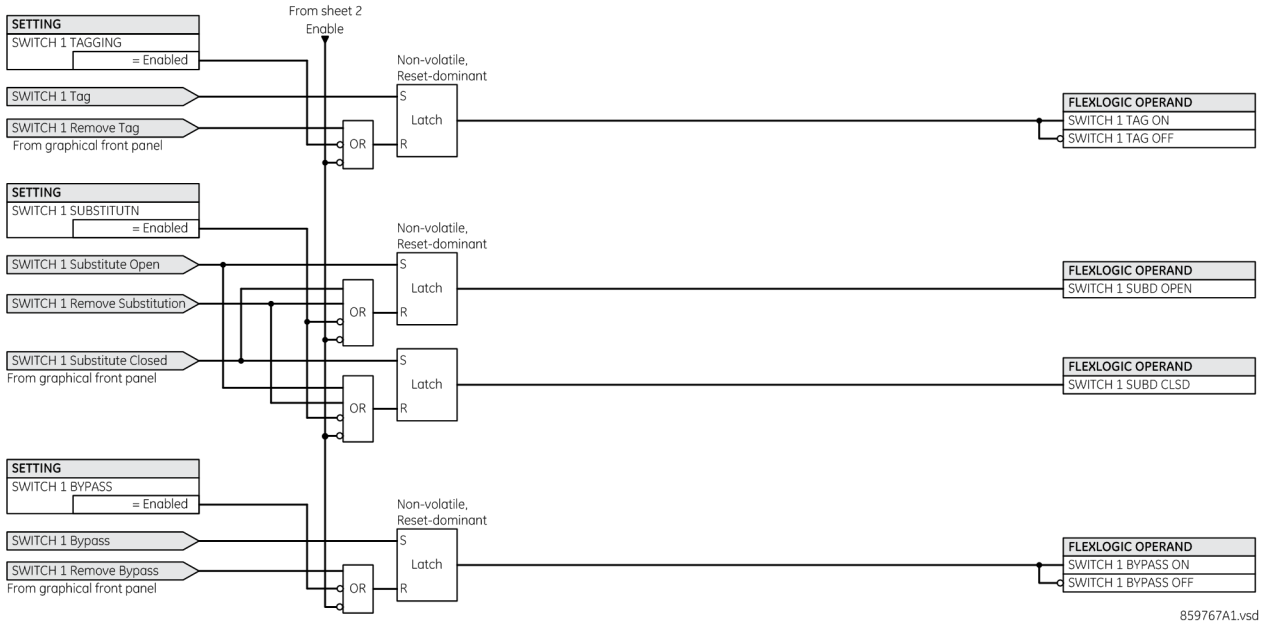

5.5.7 FlexCurves

5.5.7.1 Settings

SETTINGS ⇨⇩ SYSTEM SETUP ⇨⇩ FLEXCURVES ⇨⇩ FLEXCURE A(D)

■ **FLEXCURVE A** ■	⇔	**FLEXCURVE A TIME AT** **0.00 xPKP: 0 ms**	Range: 0 to 65535 ms in steps of 1
	⇩	**FLEXCURVE A TIME AT** **0.05 xPKP: 0 ms**	Range: 0 to 65535 ms in steps of 1
	⇩		
	⇧	**FLEXCURVE A TIME AT** **20.00xPKP: 0 ms**	Range: 0 to 65535 ms in steps of 1

FlexCurves A through D have settings for entering times to reset and operate at the following pickup levels: 0.00 to 0.98 and 1.03 to 20.00. This data is converted into two continuous curves by linear interpolation between data points. To enter a custom FlexCurve, enter the reset and operate times (using the **VALUE** keys) for each selected pickup point (using the **MESSAGE** up/down keys) for the required protection curve (A, B, C, or D).

Table 5-17: FlexCurve table

Reset	Time ms	Reset	Time ms	Operate	Time ms	Operate	Time ms	Operate	Time ms	Operate	Time ms
0.00		0.68		1.03		2.9		4.9		10.5	
0.05		0.70		1.05		3.0		5.0		11.0	
0.10		0.72		1.1		3.1		5.1		11.5	
0.15		0.74		1.2		3.2		5.2		12.0	
0.20		0.76		1.3		3.3		5.3		12.5	
0.25		0.78		1.4		3.4		5.4		13.0	
0.30		0.80		1.5		3.5		5.5		13.5	
0.35		0.82		1.6		3.6		5.6		14.0	
0.40		0.84		1.7		3.7		5.7		14.5	
0.45		0.86		1.8		3.8		5.8		15.0	
0.48		0.88		1.9		3.9		5.9		15.5	
0.50		0.90		2.0		4.0		6.0		16.0	
0.52		0.91		2.1		4.1		6.5		16.5	
0.54		0.92		2.2		4.2		7.0		17.0	
0.56		0.93		2.3		4.3		7.5		17.5	
0.58		0.94		2.4		4.4		8.0		18.0	
0.60		0.95		2.5		4.5		8.5		18.5	
0.62		0.96		2.6		4.6		9.0		19.0	
0.64		0.97		2.7		4.7		9.5		19.5	
0.66		0.98		2.8		4.8		10.0		20.0	

5

NOTE

The relay using a given FlexCurve applies linear approximation for times between the user-entered points. Take care when setting the two points that are close to the multiple of pickup of 1; that is, 0.98 pu and 1.03 pu. It is recommended to set the two times to a similar value, otherwise the linear approximation can result in undesired behavior for the operating quantity that is close to 1.00 pu.

5.5.7.2 FlexCurve configuration with EnerVista software

The EnerVista software allows for easy configuration and management of FlexCurves and their associated data points. Prospective FlexCurves can be configured from a selection of standard curves to provide the best approximate fit, then specific data points can be edited afterwards. Alternately, curve data can be imported from a specified file (.csv format) by selecting the EnerVista **Import Data From** setting (**Settings > System Setup > FlexCurves > FlexCurve**).

Curves and data can be exported, viewed, and cleared by clicking the appropriate buttons. FlexCurves are customized by editing the operating time (ms) values at pre-defined per-unit current multiples. Note that the pickup multiples start at zero (implying the "reset time"), operating time below pickup, and operating time above pickup.

5.5.7.3 Recloser curve editing

Recloser curve selection is special in that recloser curves can be shaped into a composite curve with a minimum response time and a fixed time above a specified pickup multiples. There are 41 recloser curve types supported. These definite operating times are useful to coordinate operating times, typically at higher currents and where upstream and downstream protective devices have different operating characteristics. The recloser curve configuration window shown here appears when the **Initialize From** setting in the EnerVista software is set to “Recloser Curve” and the **Initialize FlexCurve** button is clicked.

Figure 5-73: Recloser curve initialization

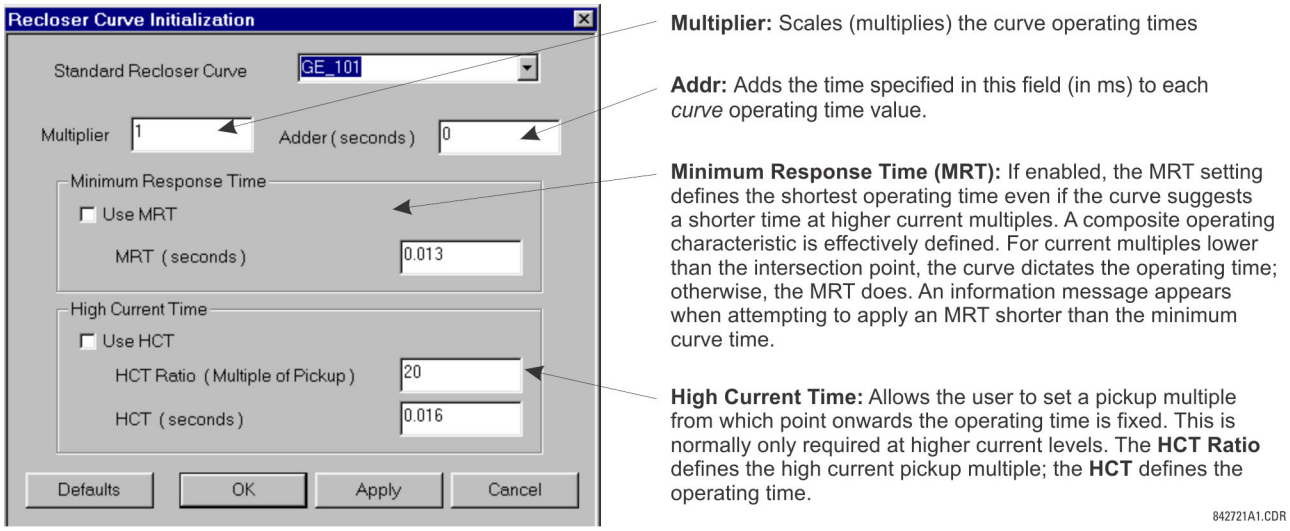

NOTE

The **Multiplier** and **Adder** settings only affect the curve portion of the characteristic and not the MRT and HCT settings. The HCT settings override the MRT settings for multiples of pickup greater than the HCT ratio.

5.5.7.4 Example

A composite curve can be created from the GE_111 standard with MRT = 200 ms and HCT initially disabled and then enabled at eight times pickup with an operating time of 30 ms. At approximately four times pickup, the curve operating time is equal to the MRT and from then onwards the operating time remains at 200 ms.

Figure 5-74: Composite recloser curve with HCT disabled

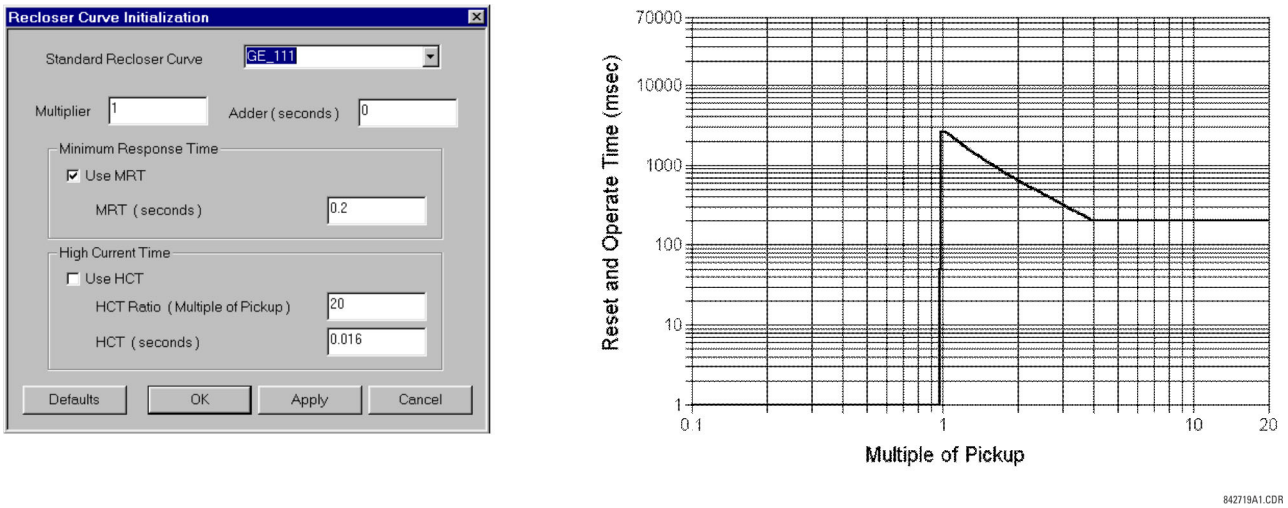

With the HCT feature enabled, the operating time reduces to 30 ms for pickup multiples exceeding eight times pickup.

Figure 5-75: Composite recloser curve with HCT enabled

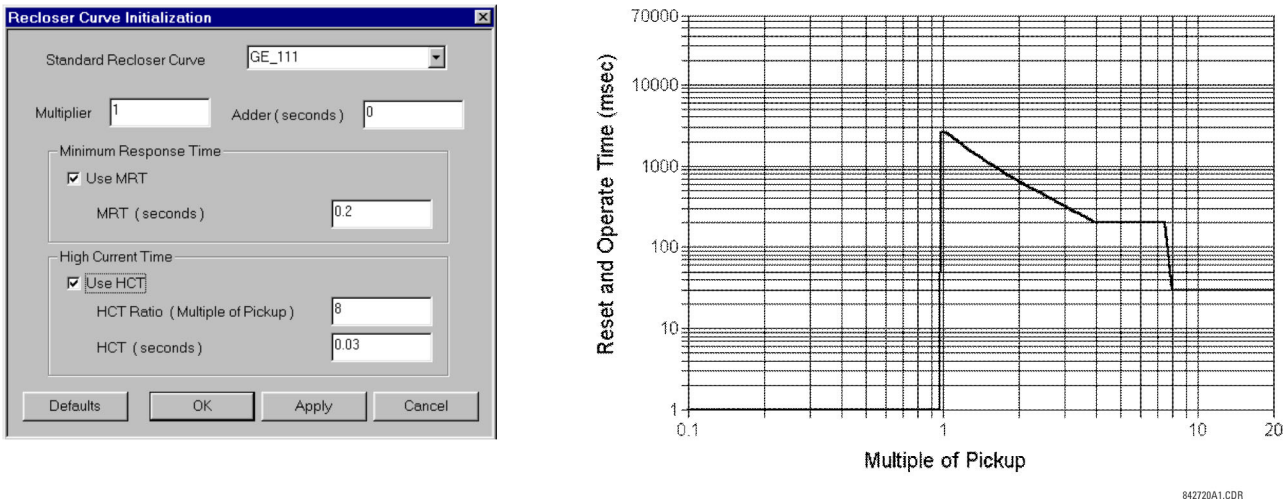

NOTE

Configuring a composite curve with an increase in operating time at increased pickup multiples is not allowed. If this is attempted, the EnerVista software generates an error message and discards the proposed changes.

5

5.5.7.5 Standard recloser curves

The following graphs display standard recloser curves available for the L90.

Figure 5-76: Recloser curves GE101 to GE106

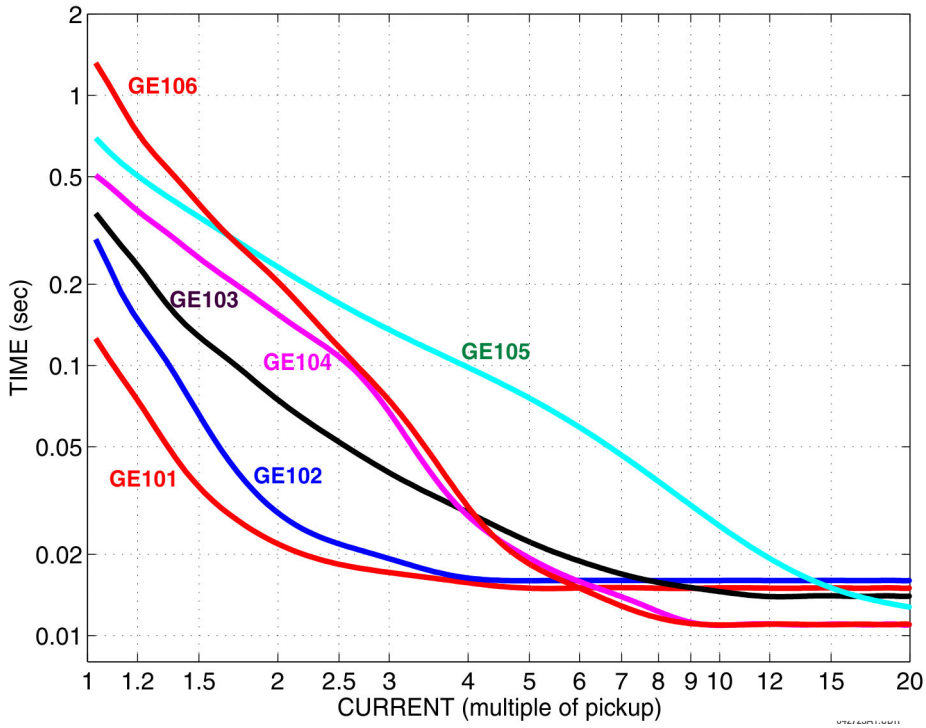

Figure 5-77: Recloser curves GE113, GE120, GE138, and GE142

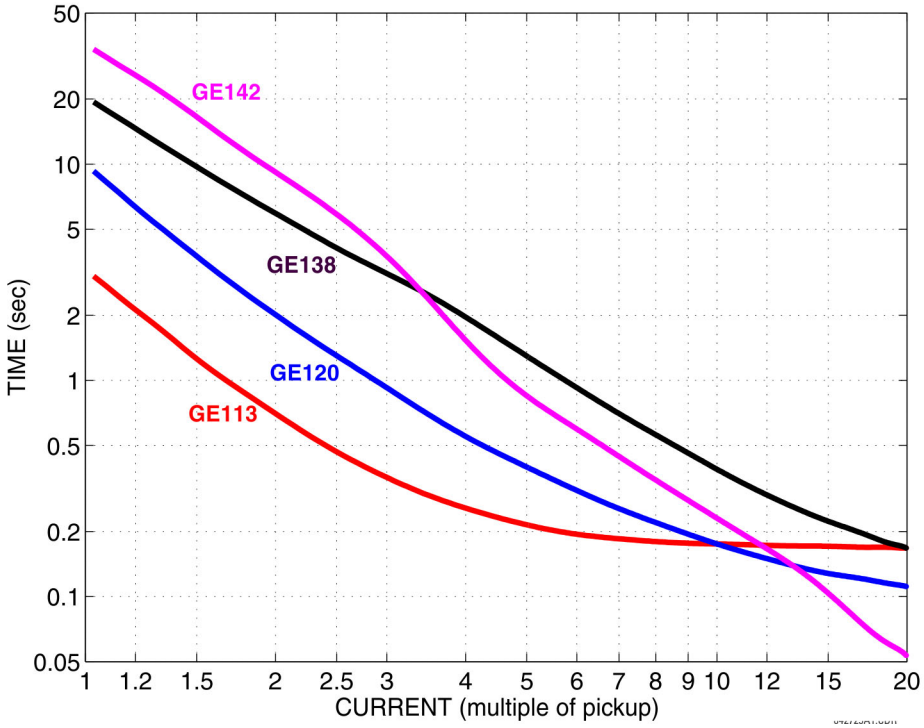

Figure 5-78: Recloser curves GE134, GE137, GE140, GE151, and GE201

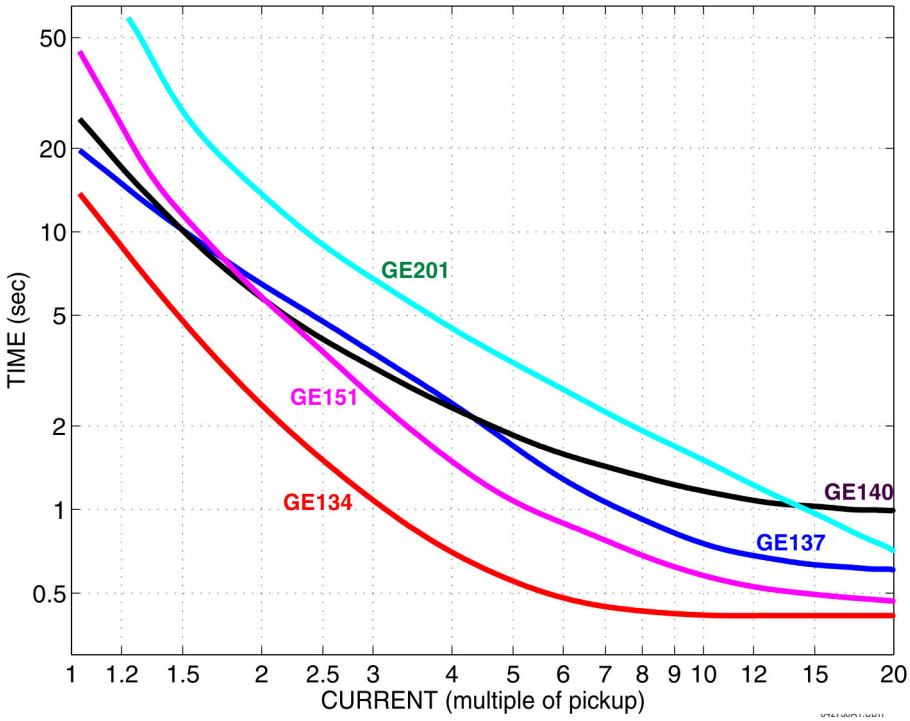

5

Figure 5-79: Recloser curves GE131, GE141, GE152, and GE200

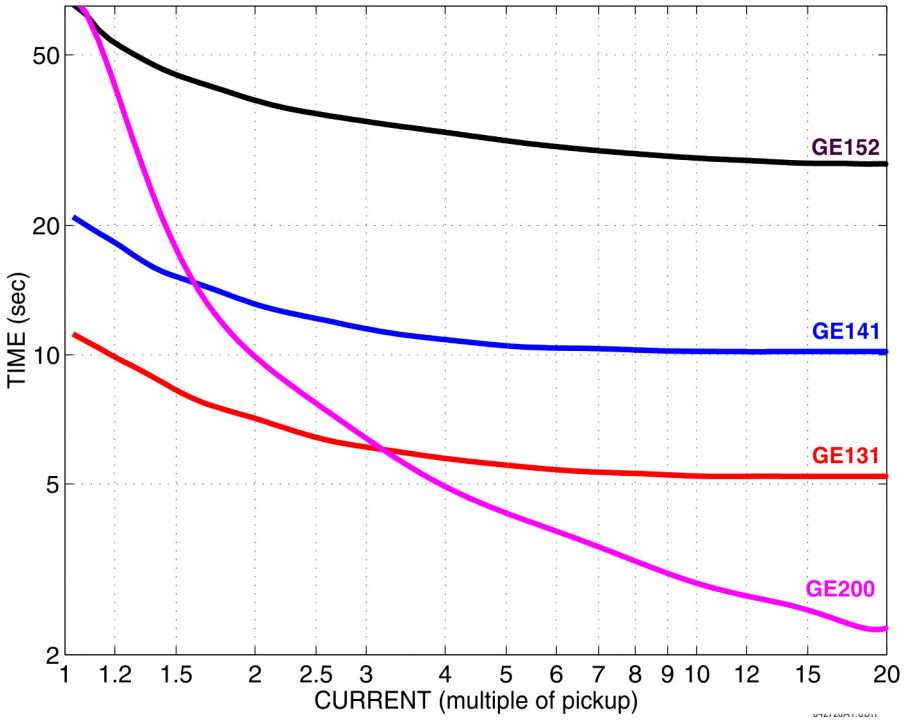

Figure 5-80: Recloser curves GE133, GE161, GE162, GE163, GE164, and GE165

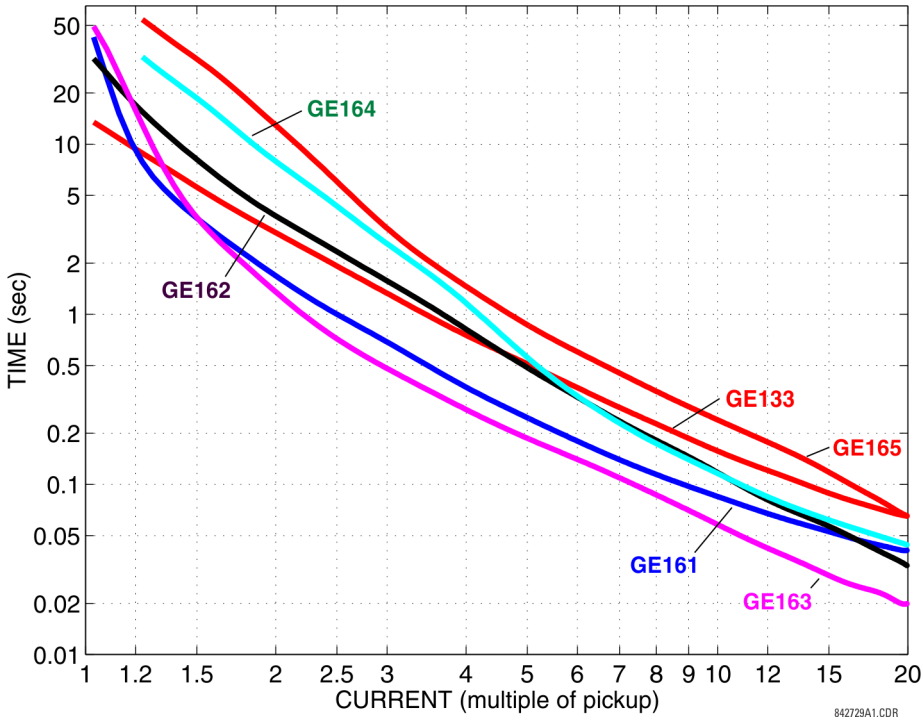

Figure 5-81: Recloser curves GE116, GE117, GE118, GE132, GE136, and GE139

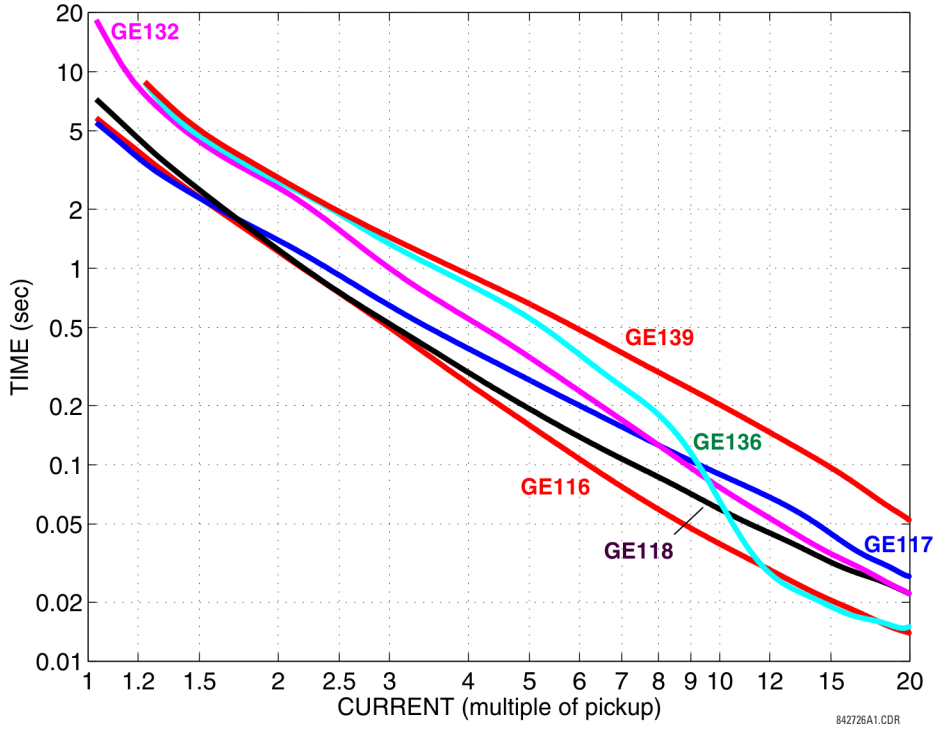

Figure 5-82: Recloser curves GE107, GE111, GE112, GE114, GE115, GE121, and GE122

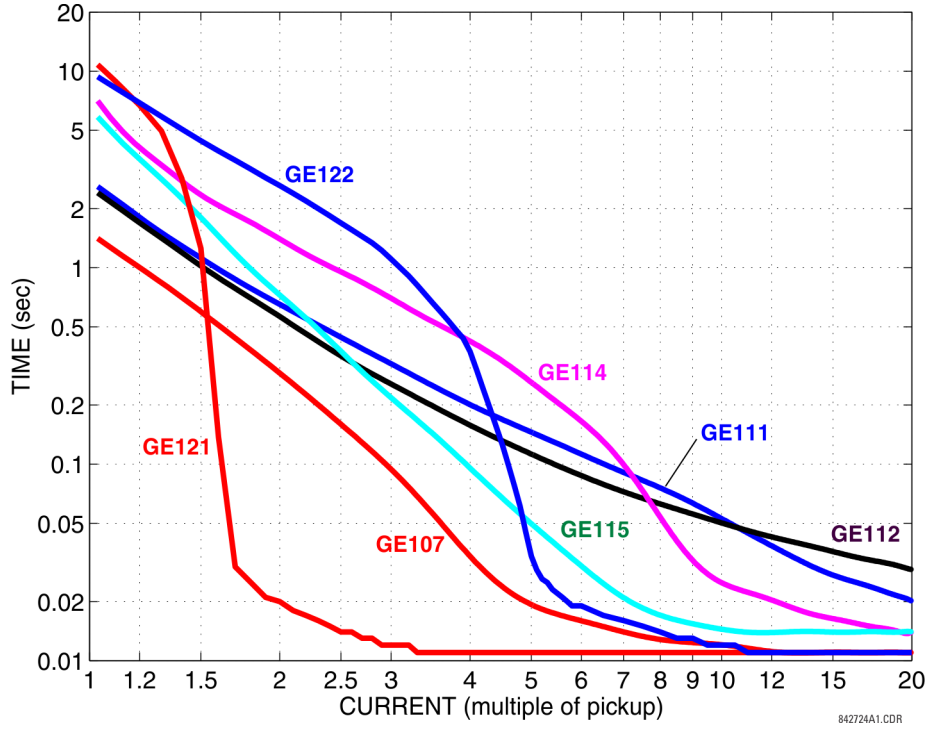

5

Figure 5-83: Recloser curves GE119, GE135, and GE202

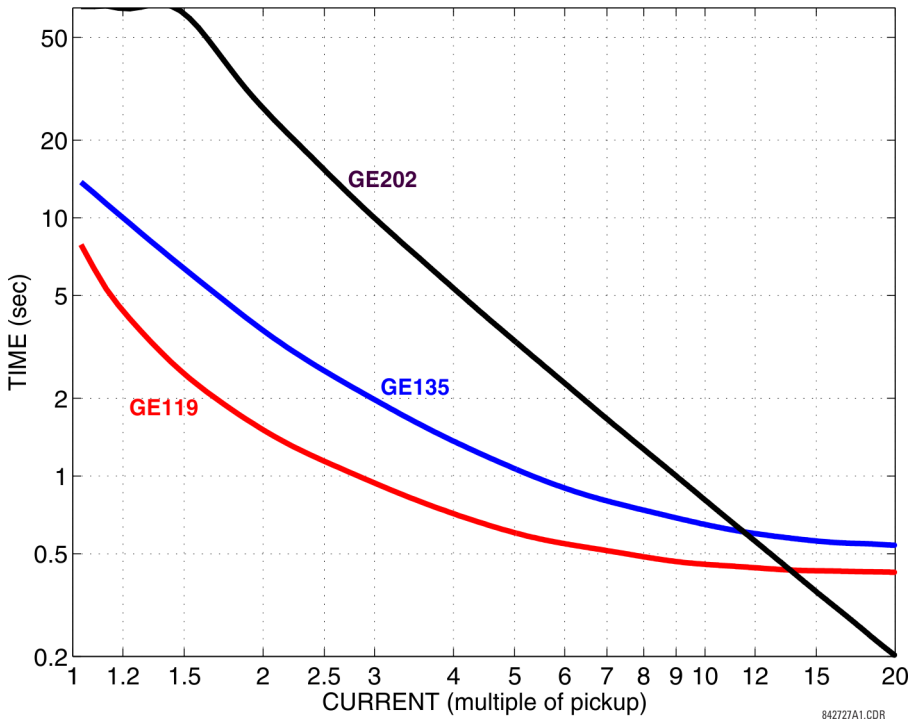

5

5.5.8 Phasor Measurement Unit

5.5.8.1 Menu

SETTINGS ⇨⇩ SYSTEM SETUP ⇨⇩ PHASOR MEASUREMENT UNIT

■ PHASOR MEASUREMENT ■ UNIT	⇔	■ PHASOR MEASUREMENT ■ UNIT 1	See below
	⇩	■ PMU AGGREGATOR 1 ■	See page 5-185
	⇧	■ IEC 90-5 MSVCB ■ CONFIGURATION	See page 5-187

SOFTWARE OPTION

The L90 is provided with an optional Phasor Measurement Unit (PMU) feature. This feature is specified as a software option at the time of ordering. The number of PMUs available also depends on this option. Using the order code for your device, see the order codes in chapter 2 for details.

5.5.8.2 UR synchrophasor implementation

Phasors are used in protection relays. When these phasors are referenced to a common time base, they are referred to as synchrophasors. A vastly improved method for tracking power system dynamic phenomena for power system monitoring, protection, operation, and control can be realized when synchrophasors from different locations within the power system are networked to a central location.

The L90 offers PMU features over two communication standards, IEC 61850-90-5 and IEEE C37.118. The figure shows complete synchrophasor implementation.

Figure 5-84: Synchrophasor implementation

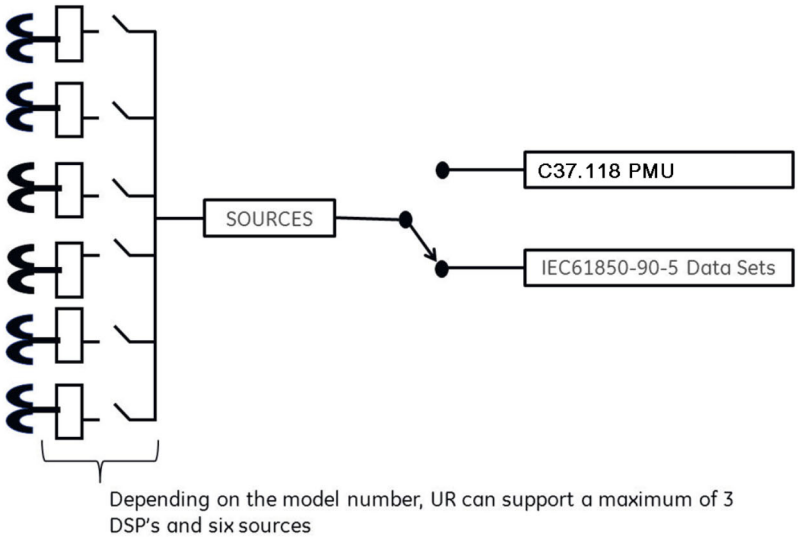

5.5.8.3 UR implementation of IEC 61850-90-5

Synchrophasor data as measured and calculated by PMUs is used to assess the condition of the electrical power network. The IEEE C37.118 standards define synchrophasors and related message formats to transmit synchrophasor data. Synchrophasor streaming via IEEE C37.118 has proven to work but the need to have a communication mechanism that is compliant with the concept of IEC 61850 has led to the development of IEC 61850-90-5. The IEC 61850-90-5 technical report defines the packet structure for multicast routing of streamed Sampled Value (SV) known as R-SV.

UR firmware versions 7.0 and above have a 90-5 based R-SV implementation equivalent in structure and configuration to that of the existing IEEE C37.118 implementation of firmware version 6.0, that is, synchrophasor data at rates up to 60 Hz for metering and 120 Hz for protection class synchrophasors. The following two figures depict the general data flow for the generation of synchrophasor data for IEC 61850-90-5. In the first figure, when IEC 61850-90-5 is selected all real and virtual sources are available for the IEC 61850-90-5 PMUs.

The number of PMUs and aggregators vary by product, as outlined in the table.

Table 5-18: PMU implementation by UR device

UR device	Number of PMUS	Number of aggregators	Comment
N60	1, 2, 4, or 6	1 with 1 PMU 2 with 2 or 4 PMUs 4 with 6 PMUs	Number of PMUs is ordered using software options
C60	2	2	
D60, F60, G60, L30, L90, T60	1	1	

The figure shows an example of an N60 using four Logical Device PMUs (Logical Device 2 through 5) and four aggregators. The control blocks for the aggregators are located in LD1. A 64 character LDName setting is provided.

Figure 5-85: N60 example for four logical device PMUs

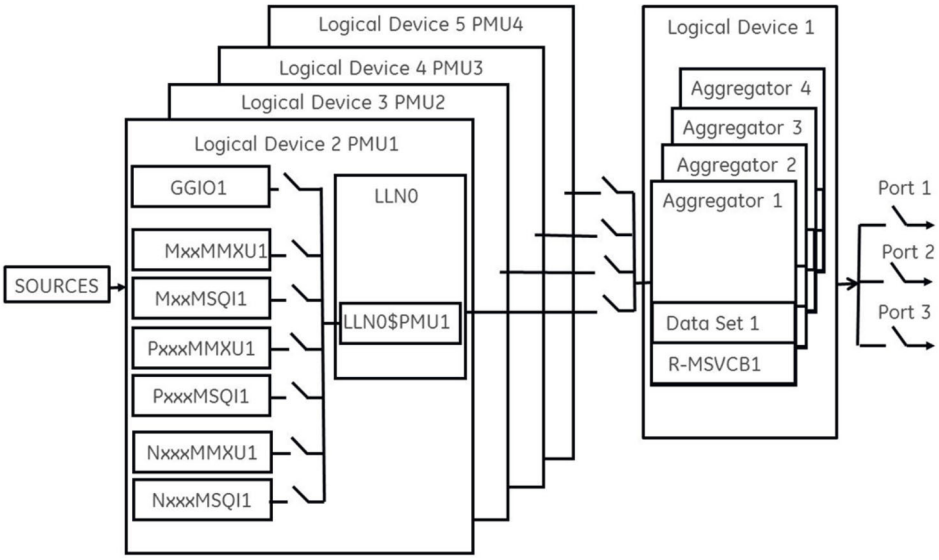

NOTE

Precise time input to the relay from the international time standard, via either IRIG-B or PTP, is vital for correct synchrophasor measurement and reporting. For IRIG-B, a DC level shift IRIG-B receiver must be used for the PMU to output proper synchrophasor values.

5

Depending on the applied filter, the synchrophasors that are produced by PMUs are classified as either P (protection) or M (Measurement) class synchrophasors. Synchrophasors available within the UR that have no filtering applied are classified as NONE, which within the standard is classified as PRES OR UNKNOWN under the Calculation Method - ClcMth. Each Logical Device PMU supports one MxxMMXU, MxxMSQI, PxxxMMXU , PxxxMSQI, NxxMMXU, and one NxxMSQI logical node.

Figure 5-86: Logical nodes supported in each logical device

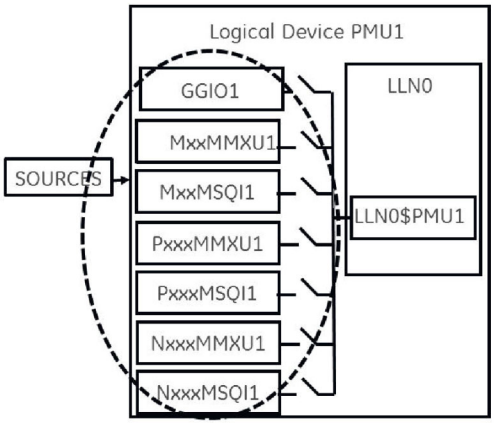

The following is a summary of LNs that are in each Logical Device (LD2 through LD7):

- PxxxMMXU1 ClcMth = P-Class (Note Vaux is mapped to Vneut of MMXU)
- PxxxMSQI1 ClcMth = P-CLASS
- MxxMMXU1 ClcMth = M-Class (Note Vaux is mapped to Vneut of MMXU)
- MxxMSQI1 ClcMth = M-CLASS
- NxxMMXU1 ClcMth = M-Class (Note Vaux is mapped to Vneut of MMXU)
- NxxMSQI1 ClcMth = M-CLASS

- GGIO1, which contains 16 digital status indication points and 16 analog points. The Analog GGIO values are selectable from any FlexAnalog value in the UR.

NOTE The Synchro Logical Nodes in an LD report at the same rate as set in the PMUn Basic Configuration setting. This is reflected in the instantiation of the Data Object – SmpRate in the msvcb## of LLN0 in the LD1. SmpRate is a Read Only Integer Status (INS).

When the first PMU from any LD is mapped into an aggregator, the aggregator inherits the Sample Rate (SmpRate) and IEEE C37.118 Class (P or M) of that PMU. The value of the SmpRate DO in the Report Control Block is set based on the value of the Sample Rate in the PMU. The Class of the Dataset are mapped into the MSVID of the Dataset (see text that follows for the overall name of the MSVID). If other PMUs are mapped into the same aggregator with different Sample Rates or from different classes, then a Self-Test error (DatSetErr) is set and dataset transmission is blocked.

A setting value — MSVID — is created with a maximum input range of 56 characters (=64 less 6 for the IDCode less 2 for the Class).

The value of MSVID in the dataset is a concatenation of the aggregator IDCode and the MSVID setting value in the format: MSVID-AggregatorIDCode-CLASS where CLASS is P, M, or N (for None) – depending on the Class of the first PMU included in the Aggregator.

NOTE Synchrophasor Rectangular Format and Integer data types are NOT supported in IEC 61850-90-5 (only supported with IEEE C37.118) and not to set — GGIO1 that contains 16 digital status indication points — aggregated as a 16 bit bitstring and 16 analog points. The Analog GGIO values are selectable from any FlexAnalog value in the UR. For firmware versions 7.0 and later, the description fields for the phasors, analog, and digital channels are populated with the 16 character name field provided within the Basic Configuration menu. Additionally, the names of the 16 binary points are implemented as numbered descriptions — d1, d2, d3, and so on. The number of descriptions are equal to the number of bits configured in the 16 bit digital status word.

All bitstrings less than or equal to 32 bits in length map into a 32 bit bitstring in an IEC 61850-90-5 dataset.

The Value of the Nominal Frequency of the chassis is instantiated as a DO in LPHD of LD1. The value is named HzNom and is an Integer Status (INS).

The UR also supports the option to apply no filtering to the synchrophasors. If no filtering is applied (PMU Class = None), according to the standard, the ClcMth attribute is PRES. The semantic of the ClcMth used is not carried in the individual DO and so it is recommended that one of letters of the prefix on the instantiated LNs be set to “P” or “M” accordingly in order to differentiate. For firmware versions 7.0 and later, only FCDA data is supported. The PMU Implementation by UR Device table earlier indicates the maximum size of each PMU data set for version 7.2 and later using FCDA data (non-structured data).

5.5.8.4 Example: Protection synchrophasors data set with reporting rate 60 frames/second

This example gives the protection synchrophasors data set with a reporting rate of 60 frames per second (P60MMXU1). See the figure earlier, Logical Nodes Supported in Each Logical Device. This data or list of items, as shown in the following figure, is not available to the UR setup program but is available to be mapped by the user into a selected aggregator or aggregators dataset. The logical device name (LDName) of each PMU LD is a 64 character user setting. The IEEE C37.118 STN and IDCode is to be mapped as a concatenated value in the (d)escription field of LPL CDC of the NamPlt DO in LLN0. The mapping is implemented as STN-IDCode (text string).

From each PMU, the user selects the phasor information of interest that is mapped into the selected aggregator datset(s). For version 7.0 and later, only FCDA data is supported.

Figure 5-87: Data set created from user-selected internal items

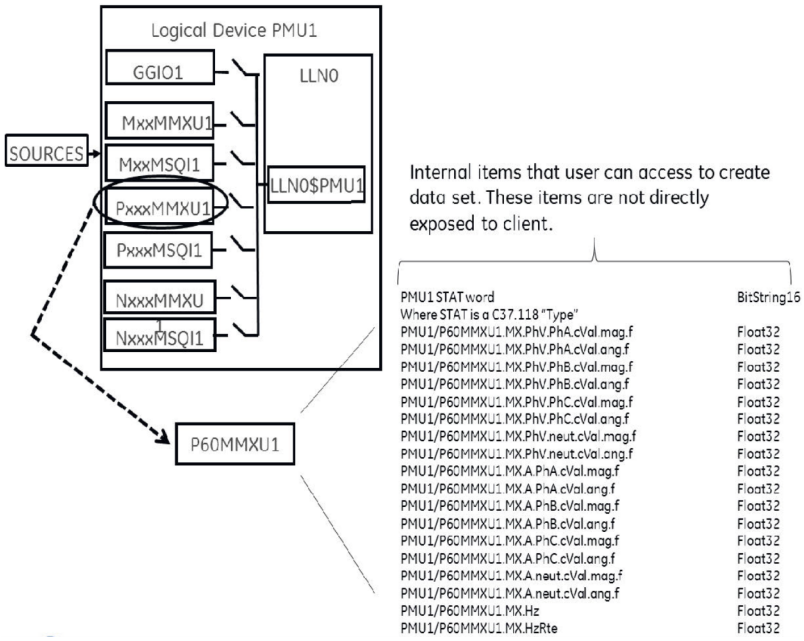

5

5.5.8.5 Example: Creation of different data sets

The aggregators allow the aggregation of phasors from multiple PMUs (with the same reporting rate) into a single custom data set to optimize bandwidth when streaming.

Figure 5-88: Example of aggregator data sets

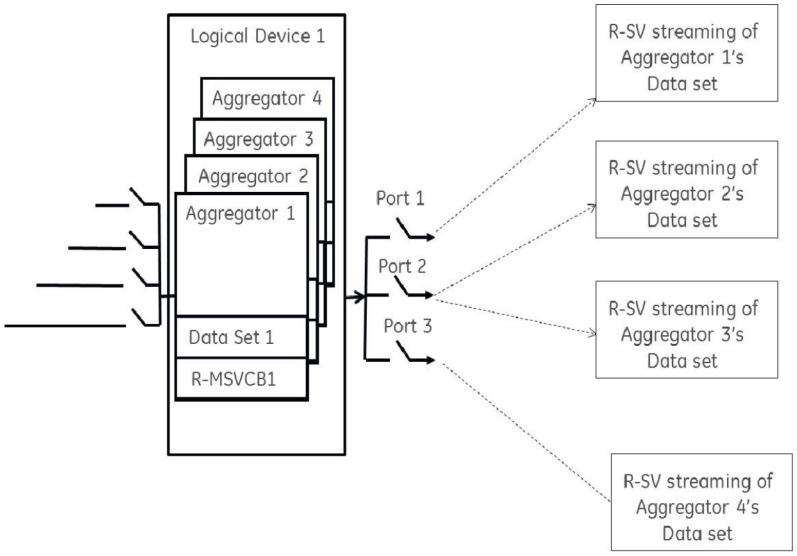

5.5.8.6 Configuration example: CFG-2 based configuration (using IEC 61850-90-5)

The L90 is expected to send the CFG-2 file (IEEE C37.118 config. file) upon request from the upstream synchrophasor devices (for example, P30) without stopping R-SV multicasting, as shown in the following figure. The primary domain controller (PDC) does not need to use a stop/start data stream command if the UR protocol is set to IEC 61850-90-5 prior to requesting the configuration via CFG-2 (IEEE C37.118 config. file). The CFG-2 request from the P30 can be on TCP/IP or UDP/IP, however, R-SV data streaming is only UDP multicasts (not TCP).

Figure 5-89: CFG-2 based configuration solution

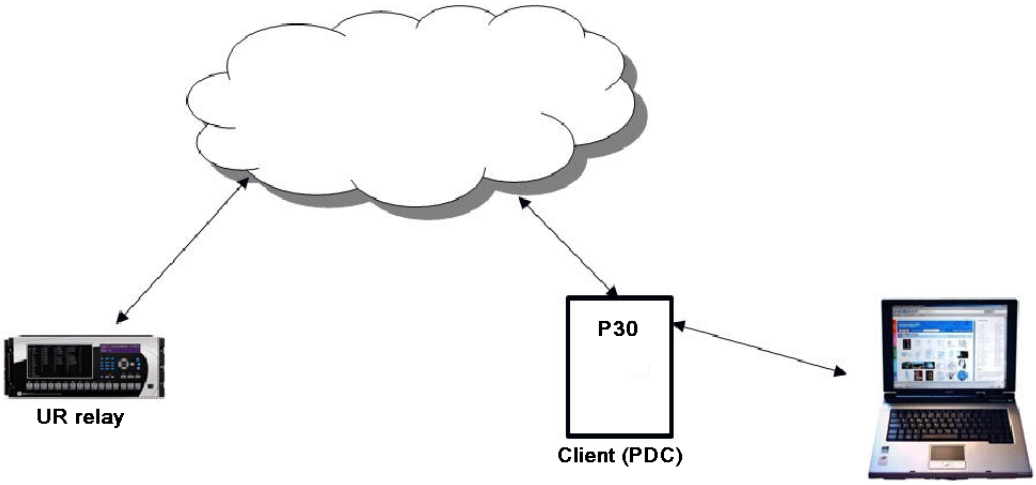

5.5.8.7 Modification of SYNC word in CFG-2 for TR 90-5 data sets

In the CFG-2 file, all relevant information about the data being streamed is included. However, this file does not include the fact that it describes a 90-5 dataset or the number of Application Service Data Units (datasets). In order to communicate this information via the CFG-2 file for a given aggregator, when the aggregator is set to 90-5, the version number of the CFG-2 file (found in bits 0-3 of the frame SYNC word, which is set presently to 2) is set as follows:

Value (decimal)	Number of ASDUs
11	1
12	2
13	3
14	4

5.5.8.8 Settings

The PMU settings are organized as follows.

SETTINGS ⇨⇩ SYSTEM SETUP ⇨⇩ PHASOR MEASUREMENT UNIT ⇨⇩ PHASOR MEASUREMENT UNIT 1

■ PHASOR MEASUREMENT ■ UNIT 1	⇔	■ PMU 1 BASIC ■ CONFIGURATION	See below
	⇩	■ PMU 1 ■ CALIBRATION	See page 5-177
	⇩	■ PMU 1 ■ TRIGGERING	See page 5-178
	⇧	■ PMU 1 ■ RECORDING	See page 5-184

5.5.8.9 Basic configuration

SETTINGS ⇨⇩ SYSTEM SETUP ⇨⇩ PHASOR MEASUREMENT UNIT ⇨ PHASOR MEASUREMENT UNIT1 ⇨ PMU 1 BASIC CONFIGURATION

■ PMU 1 BASIC ■ CONFIGURATION	⇔	PMU 1 FUNCTION: Disabled	Range: Enabled, Disabled
	⇩	PMU 1 IDCODE: 1	Range: 1 to 65534 in steps of 1

PMU 1 STN: **GE-UR-PMU**	Range: 32-character ASCII string truncated to 16 characters if mapped into C37.118 Default: GE-UR-PMU
PMU 1 SIGNAL SOURCE: **SRC 1**	Range: available signal sources
PMU 1 CLASS: **M-CLASS**	Range: None, M-CLASS, P-CLASS
PMU 1 FORMAT: **Integer**	Range: Integer, Floating-point
PMU 1 STYLE: **Polar**	Range: Polar, Rectangular
PMU 1 RATE: **10/sec**	Range: 1, 2, 4, 5, 10, 12, 15,20, 25, 30,50, 60, 100, 120 /sec
PMU 1 f & df/dt **FILTER: None**	Range: None, 10Hz/s <10Hz, 10Hz/s <20Hz, 20Hz/s <10Hz, 20Hz/s <20Hz
■ **C37.118 PMU 1** ■ **CONFIGURATION**	See below
PMU 1 PHS- 1: **Off**	Range: available synchrophasor values
⇩	
PMU 1 PHS-14: **Off**	Range: available synchrophasor values
PMU 1 PHS- 1: **NM: GE-UR-PMU-PHS 1**	Range: 16-character ASCII string
⇩	
PMU 1 PHS-14: **NM: GE-UR-PMU-PHS 14**	Range: 16-character ASCII string
PMU 1 A-CH- 1: **Off**	Range: available FlexAnalog values
⇩	
PMU 1 A-CH-8: **Off**	Range: available FlexAnalog values
PMU 1 A-CH- 1: **NM: AnalogChannel 1**	Range: 16-character ASCII string
⇩	
PMU 1 A-CH-8: **NM: AnalogChannel 8**	Range: 16-character ASCII string
PMU 1 D-CH- 1: **Off**	Range: available FlexLogic operands
⇩	
PMU 1 D-CH-16: **Off**	Range: available FlexLogic operands
PMU 1 D-CH- 1 **NM: Dig Channel 1**	Range: 16-character ASCII string
⇩	
PMU 1 D-CH-16 **NM: Dig Channel 16**	Range: 16-character ASCII string
PMU 1 D-CH- 1 **NORMAL STATE: Off**	Range: Off, On
⇩	

⇕	**PMU 1 D-CH-16:** **NORMAL STATE: Off**	Range: Off, On
⇧	■ **90-5 PMU 1** ■ **CONFIGURATION**	See below

This section contains basic Phasor Measurement Unit (PMU) data, such as functions, source settings, and names.

PMU 1 FUNCTION — This setting enables the LOGICAL Device PMU 1 functionality. Use this setting to permanently enable or disable the feature.

PMU 1 IDCODE — This setting assigns a numerical ID to the PMU. It corresponds to the IDCODE field of the data, configuration, header, and command frames of the IEEE C37.118 protocol. The PMU uses this value when sending data, configuration, and header frames; and it responds to this value when receiving the command frame. This is used when only data from one PMU is present.

PMU 1 STN — This setting assigns an alphanumeric ID to the PMU station. It corresponds to the STN field of the configuration frame of the IEEE C37.118 protocol. This value is a 16-character ASCII string as per the IEEE C37.118 standard.

PMU 1 SIGNAL SOURCE — This setting specifies one of the available L90 signal sources for processing in the PMU. Any combination of voltages and currents can be configured as a source. The current channels can be configured as sums of physically connected currents. This facilitates PMU applications in breaker-and-a-half, ring-bus, and similar arrangements. The PMU feature calculates voltage phasors for actual voltage (A, B, C, and auxiliary) and current (A, B, C, and ground) channels of the source, as well as symmetrical components (0, 1, and 2) of both voltages and currents. When configuring communication and recording features of the PMU, the user can select, from the above superset, the content to be sent out or recorded. When one source is selected by one PMU, it cannot be selected by another PMU.

PMU 1 CLASS (Range P, M, None) — This setting selects the synchrophasor class. A reporting rate of 100 or 120 can only be selected for class P synchrophasors and if the system frequency is 50 or 60 Hz, respectively.

PMU 1 NETWORK REPORTING FORMAT — This setting selects between reporting synchrophasors as 16-bit integer or 32-bit IEEE floating point numbers. This setting complies with bit-1 of the FORMAT field of the C37.118 configuration frame. Note that this setting applies to synchrophasors only; the user-selectable FlexAnalog channels are always transmitted as 16-bit integer values.

PMU 1 NETWORK REPORTING STYLE — This setting selects between reporting synchrophasors in rectangular (real and imaginary) or in polar (magnitude and angle) coordinates. This setting complies with bit-0 of the FORMAT field of the C37.118 configuration frame.

PMU 1 RATE — This setting specifies the reporting rate for the network (Ethernet) port. This value applies to all PMU streams of the device that are assigned to transmit over this aggregator. For a system frequency of 60 Hz (50 Hz), the L90 generates a reporting mismatch message if the selected rate is not set as 10 Hz, 12 Hz, 15 Hz, 20 Hz, 30 Hz, 60 Hz, or 120 Hz (or 10 Hz, 25 Hz, 50 Hz, or 100 Hz when the system frequency is 50 Hz) when entered via the keypad or software; and the L90 stops the transmission of reports. Note that 4 Hz is not allowed for an M-class 50 Hz system.

PMU 1 f & df/dt FILTER — This setting allows applying post-filtering to the frequency and rate-of-change of-frequency to avoid reporting erroneous values, which can possibly happen during fault, switching, and other system disturbances. For example, choosing 20Hz/s <10Hz setting ensures that if rate-of-change of-frequency between current reporting instance and previous one exceeds 20Hz/s or frequency deviation from the nominal frequency exceeds 10Hz, then new frequency and rate-of-change of-frequency value are invalidated. If this happens, the previous valid value of the frequency is maintained and rate-of-change of-frequency value is forced to 0 at this reporting instance.

PMU 1 PHS-1 to **PMU 1 PHS-14** — These settings specify synchrophasors to be transmitted from the superset of all synchronized measurements. The table outlines available synchrophasor values.

Table 5-19: Synchrophaser settings

Selection	Meaning
Va	First voltage channel, either Va or Vab
Vb	Second voltage channel, either Vb or Vbc
Vc	Third voltage channel, either Vc or Vca
Vx	Fourth voltage channel

Selection	Meaning
Ia	Phase A current, physical channel or summation as per the source settings
Ib	Phase B current, physical channel or summation as per the source settings
Ic	Phase C current, physical channel or summation as per the source settings
Ig	Fourth current channel, physical or summation as per the source settings
V1	Positive-sequence voltage, referenced to Va
V2	Negative-sequence voltage, referenced to Va
V0	Zero-sequence voltage
I1	Positive-sequence current, referenced to Ia
I2	Negative-sequence current, referenced to Ia
I0	Zero-sequence current

These settings allow for optimizing the frame size and maximizing transmission channel usage, depending on a given application. Select "Off" to suppress transmission of a given value.

PMU 1 PHS-1 NM to **PMU 1 PHS-14 NM** — These settings allow for custom naming of the synchrophasor channels. Sixteen-character ASCII strings are allowed as in the CHNAM field of the configuration frame. These names are typically based on station, bus, or breaker names.

PMU 1 A-CH-1 to **PMU 1 A-CH-16** — These settings specify any analog data measured by the relay to be included as a user-selectable analog channel of the data frame. Up to eight analog channels can be configured to send any FlexAnalog value from the relay. Examples include frequency, rate of frequency change, active and reactive power, per phase or three-phase power, power factor, temperature via RTD inputs, and THD. The configured analog values are sampled concurrently with the synchrophasor instant and sent as 32-bit floating-point values scaled to Engineering units.

5

PMU 1 A-CH-1 NM to **PMU 1 A-CH-16 NM** — These settings allow for custom naming of the analog channels. Sixteen-character ASCII strings are allowed as in the CHNAM field of the configuration frame.

PMU 1 D-CH-1 to **PMU 1 D-CH-16** — These settings specify any digital flag measured by the relay to be included as a user-selectable digital channel of the data frame. Up to 16 digital channels can be configured to send any FlexLogic operand from the relay. The configured digital flags are sampled concurrently with the synchrophasor instant. These values are mapped into a two-byte integer number, with byte 1 LSB corresponding to the digital channel 1 and byte 2 MSB corresponding to digital channel 16.

PMU 1 D-CH-1 NM to **PMU 1 D-CH-16 NM** — These settings allow for custom naming of the digital channels. Sixteen-character ASCII strings are allowed as in the CHNAM field of the configuration frame.

PMU 1 D-CH-1 NORMAL STATE to **PMU 1 D-CH-16 NORMAL STATE** — These settings allow for specifying a normal state for each digital channel. These states are transmitted in configuration frames to the data concentrator.

C37.118 PMU 1 configuration

SETTINGS ⇨⇩ SYSTEM SETUP ⇨⇩ PHASOR MEASUREMENT UNIT ⇨ PHASOR MEASURMENT UNIT1 ⇨ PMU 1 BASIC CONFIGURATION ⇨ C37.118 PMU 1 CONFIGURATION

■ C37.118 PMU 1 ■ CONFIGURATION	⇔	**PMU 1 FORMAT: Integer**	Range: Integer, Floating-point
	⇧	**PMU 1 STYLE: Polar**	Range: Polar, Rectangular

PMU 1 FORMAT — This setting selects whether synchrophasors are reported as 16-bit integers or 32-bit IEEE floating point numbers. This setting complies with bit-1 of the FORMAT field of the IEEE C37.118 configuration frame. This setting applies to synchrophasors only; user-selectable FlexAnalog channels are always transmitted as 16-bit integer values.

PMU 1 STYLE — This setting selects whether synchrophasors are reported in rectangular (real and imaginary) coordinates or in polar (magnitude and angle) coordinates. This setting complies with bit-0 of the FORMAT field of the IEEE C37.118 configuration frame.

NOTE

With 90-5 PMU, the FORMAT and STYLE are Floating-point and Polar respectively, as specified in the IEC 61850-90-5 technical report.

IEC 61850–90–5 PMU 1 configuration

SETTINGS ⇨⇩ SYSTEM SETUP ⇨⇩ PHASOR MEASUREMENT UNIT ⇨ PHASOR MEASURMENT UNIT1 ⇨ PMU 1 BASIC CONFIGURATION ⇨ 90-5 PMU 1 CONFIGURATION

■ 90-5 PMU 1 ■ CONFIGURATION	⇔	PMU 1 LDINST: PMU1	Range: 64 char ASCII text

PMU1 LDINST — A user-defined visible string (maximum 64 char ASCII test) to assign Logical Device (LD) Inst for a PMU logical device.

NOTE

As per IEC 61850-6 standard specification, the PMU LD Name is the concatenated combination (to total 64 characters) of IED Name (specified in IEC 61850 Server Settings) appended with PMU X LDINST string.

5.5.8.10 PMU calibration

SETTINGS ⇨⇩ SYSTEM SETUP ⇨⇩ PHASOR MEASUREMENT UNIT ⇨⇩ PHASOR MEASUREMENT UNIT 1 ⇨⇩ PMU 1 CALIBRATION

■ PMU 1 ■ CALIBRATION	⇔	PMU 1 VA CALIBRATION ANGLE: 0.00°	Range: –5.00 to 5.00° in steps of 0.05
	⇩	PMU 1 VA CALIBRATION MAG: 100.0%	Range: 95.0 to 105.0 in steps of 0.1%
	⇩	PMU 1 VB CALIBRATION ANGLE: 0.00°	Range: –5.00 to 5.00° in steps of 0.05
	⇩	PMU 1 VB CALIBRATION MAG: 100.0%	Range: 95.0 to 105.0 in steps of 0.1%
	⇩	PMU 1 VC CALIBRATION ANGLE: 0.00°	Range: –5.00 to 5.00° in steps of 0.05
	⇩	PMU 1 VC CALIBRATION MAG: 100.0%	Range: 95.0 to 105.0 in steps of 0.1%
	⇩	PMU 1 VX CALIBRATION ANGLE: 0.00°	Range: –5.00 to 5.00° in steps of 0.05
	⇩	PMU 1 VX CALIBRATION MAG: 100.0%	Range: 95.0 to 105.0 in steps of 0.1%
	⇩	PMU 1 IA CALIBRATION ANGLE: 0.00°	Range: –5.00 to 5.00° in steps of 0.05
	⇩	PMU 1 IA CALIBRATION MAG: 100.0%	Range: 95.0 to 105.0 in steps of 0.1%
	⇩	PMU 1 IB CALIBRATION ANGLE: 0.00°	Range: –5.00 to 5.00° in steps of 0.05
	⇩	PMU 1 IB CALIBRATION MAG: 100.0%	Range: 95.0 to 105.0 in steps of 0.1%
	⇩	PMU 1 IC CALIBRATION ANGLE: 0.00°	Range: –5.00 to 5.00° in steps of 0.05
	⇩	PMU 1 IC CALIBRATION MAG: 100.0%	Range: 95.0 to 105.0 in steps of 0.1%

⇕	**PMU 1 IG CALIBRATION ANGLE: 0.00°**	Range: –5.00 to 5.00° in steps of 0.05
⇕	**PMU 1 IG CALIBRATION MAG: 100.0%**	Range: 95.0 to 105.0 in steps of 0.1%
⇕	**PMU 1 SEQ VOLT SHIFT ANGLE: 0°**	Range: –180 to 180° in steps of 30
⇧	**PMU 1 SEQ CURR SHIFT ANGLE: 0°**	Range: –180 to 180° in steps of 30

This menu contains user angle and magnitude calibration data for the Phasor Measurement Unit (PMU). This data is combined with the factory adjustments to shift the phasors for better accuracy.

PMU 1 VA... IG CALIBRATION ANGLE — These settings recognize applications with protection class voltage and current sources, and they allow the user to calibrate each channel (four voltages and four currents) individually to offset errors introduced by VTs, CTs, and cabling. The setting values are effectively added to the measured angles. Therefore, enter a positive correction when the secondary signal lags the true signal and a negative value when the secondary signal leads the true signal.

PMU 1 VA... IG CALIBRATION MAGNITUDE — These settings recognize applications with protection class voltage and current sources, and they allow the user to calibrate each channel (four voltages and four currents) individually to offset errors introduced by VTs, CTs. The setting values are effectively a multiplier of the measured magnitudes. Therefore, entering a multiplier greater than 100% of the secondary signal increases the true signal, and a multiplier less than 100% value of the secondary signal reduces the true signal.

PMU 1 SEQ VOLT SHIFT ANGLE — This setting allows correcting positive- and negative-sequence voltages for vector groups of power transformers located between the PMU voltage point and the reference node. This angle is effectively added to the positive-sequence voltage angle and subtracted from the negative-sequence voltage angle. Note that:

- When this setting is not "0°", the phase and sequence voltages do not agree. Unlike sequence voltages, the phase voltages cannot be corrected in a general case and therefore are reported as measured.
- When receiving synchrophasor data at multiple locations, with possibly different reference nodes, it can be more beneficial to allow the central locations to perform the compensation of sequence voltages.
- This setting applies to PMU data only. The L90 calculates symmetrical voltages independently for protection and control purposes without applying this correction.
- When connected to line-to-line voltages, the PMU calculates symmetrical voltages with the reference to the AG voltage and not to the physically connected AB voltage (see the Metering Conventions section in Chapter 6).

PMU 1 SEQ CURR SHIFT ANGLE — This setting allows correcting positive and negative-sequence currents for vector groups of power transformers located between the PMU current point and the reference node. The setting has the same meaning for currents as the **PMU 1 SEQ VOLT SHIFT ANGLE** setting has for voltages. Normally, the two correcting angles are set identically, except rare applications when the voltage and current measuring points are located at different windings of a power transformer.

5.5.8.11 PMU triggering overview

SETTINGS ⇨⇩ SYSTEM SETUP ⇨⇩ PHASOR MEASUREMENT UNIT ⇨⇩ PHASOR MEASUREMENT UNIT 1 ⇨⇩ PMU 1 TRIGGERING

■ **PMU 1** ■ **TRIGGERING**	⇔	■ **PMU 1 USER** ■ **TRIGGER**	See below
	⇕	■ **PMU 1 FREQUENCY** ■ **TRIGGER**	See page 5-179
	⇕	■ **PMU 1 VOLTAGE** ■ **TRIGGER**	See page 5-180
	⇕	■ **PMU 1 CURRENT** ■ **TRIGGER**	See page 5-181

⇩	■ PMU 1 POWER ■ TRIGGER	See page 5-182
⇧	■ PMU 1 df/dt ■ TRIGGER	See page 5-183

Each Phasor Measurement Unit (PMU) contains five triggering mechanisms to facilitate triggering of the associated PMU recorder, or cross-triggering of other PMUs in the system. They are

- Overfrequency and underfrequency
- Overvoltage and undervoltage
- Overcurrent
- Overpower
- High rate of change of frequency

The pre-configured triggers can be augmented with a user-specified condition built freely using programmable logic of the relay. The entire triggering logic is refreshed once every two power system cycles.

All five triggering functions and the user-definable condition are consolidated (ORed) and connected to the PMU recorder. Each trigger can be programmed to log its operation into the event recorder and to signal its operation via targets. The five triggers drive the STAT bits of the data frame to inform the destination of the synchrophasor data regarding the cause of trigger. The following convention is adopted to drive bits 11, 3, 2, 1, and 0 of the STAT word.

Figure 5-90: STAT bits logic

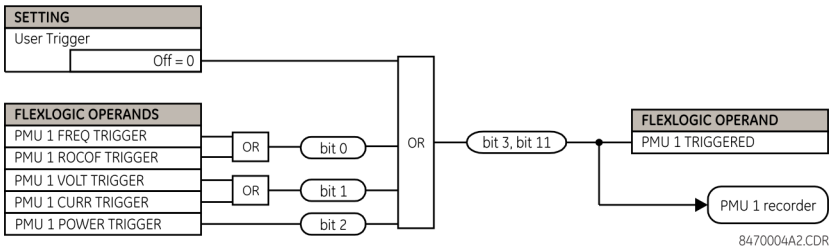

The trigger reset (drop-off) timer is available for all five triggering functions (FREQ, ROCOF, VOLT, CURR, POWER) in individual trigger settings under the **TRIGGER DPO TIME** setting. This asserts individual trigger operand and overall PMU x TRIGGERED operand with stat bits 3 and 11 for a fixed interval defined by this setting. If it is required that PMU x TRIGGERED operand with stat bits 3 and 11 stay longer than the individual reset timer, then use the **PMU x USER TRIGGER** setting assigned with appropriate elements and FlexLogic. In short, in case of **USER TRIGGER**, the drop-off time needs to be implemented using FlexLogic.

5.5.8.12 User triggering

SETTINGS ⇨⇩ SYSTEM SETUP ⇨⇩ PHASOR MEASUREMENT UNIT ⇨⇩ PHASOR MEASUREMENT UNIT 1 ⇨⇩ PMU 1 TRIGGERING ⇨⇩ PMU 1 USER TRIGGER

■ PMU 1 USER ■ TRIGGER	⇔	PMU 1 USER TRIGGER: Off	Range: FlexLogic operand

The user trigger allows customized triggering logic to be constructed from FlexLogic. The entire triggering logic is refreshed every two power system cycles.

5.5.8.13 Frequency triggering

SETTINGS ⇨⇩ SYSTEM SETUP ⇨⇩ PHASOR MEASUREMENT UNIT ⇨⇩ PHASOR MEASUREMENT UNIT 1 ⇨⇩ PMU 1 TRIGGERING ⇨⇩ PMU 1 FREQUENCY TRIGGER

■ PMU 1 FREQUENCY ■ TRIGGER	⇔	PMU 1 FREQ TRIGGER FUNCTION: Disabled	Range: Enabled, Disabled

⇕	**PMU 1 FREQ TRIGGER LOW-FREQ: 49.00 Hz**	Range: 20.00 to 70.00 Hz in steps of 0.01
⇕	**PMU 1 FREQ TRIGGER HIGH-FREQ: 61.00 Hz**	Range: 20.00 to 70.00 Hz in steps of 0.01
⇕	**PMU 1 FREQ TRIGGER PKP TIME: 0.10 s**	Range: 0.00 to 600.00 s in steps of 0.01
⇕	**PMU 1 FREQ TRIGGER DPO TIME: 1.00 s**	Range: 0.00 to 600.00 s in steps of 0.01
⇕	**PMU 1 FREQ TRIG BLK: Off**	Range: FlexLogic operand
⇕	**PMU 1 FREQ TRIGGER TARGET: Self-reset**	Range: Self-reset, Latched, Disabled
⇧	**PMU 1 FREQ TRIGGER EVENTS: Disabled**	Range: Enabled, Disabled

The trigger responds to the frequency signal of the Phasor Measurement Unit (PMU) source. The frequency is calculated from among phase voltages, auxiliary voltage, phase currents, and ground current, in this hierarchy, depending on the source configuration as per L90 standards. This element requires that the frequency be above the minimum measurable value. If the frequency is below this value, such as when the circuit is de-energized, the trigger drops out.

PMU 1 FREQ TRIGGER LOW-FREQ — Specifies the low threshold for the abnormal frequency trigger. The comparator applies a 0.02 Hz hysteresis.

PMU 1 FREQ TRIGGER HIGH-FREQ — Specifies the high threshold for the abnormal frequency trigger. The comparator applies a 0.02 Hz hysteresis.

PMU 1 FREQ TRIGGER PKP TIME — Use to filter out spurious conditions and avoid unnecessary triggering of the recorder.

PMU 1 FREQ TRIGGER DPO TIME — Use to extend the trigger after the situation returns to normal. This setting is of importance when using the recorder in the forced mode (recording as long as the triggering condition is asserted).

Figure 5-91: Frequency trigger logic

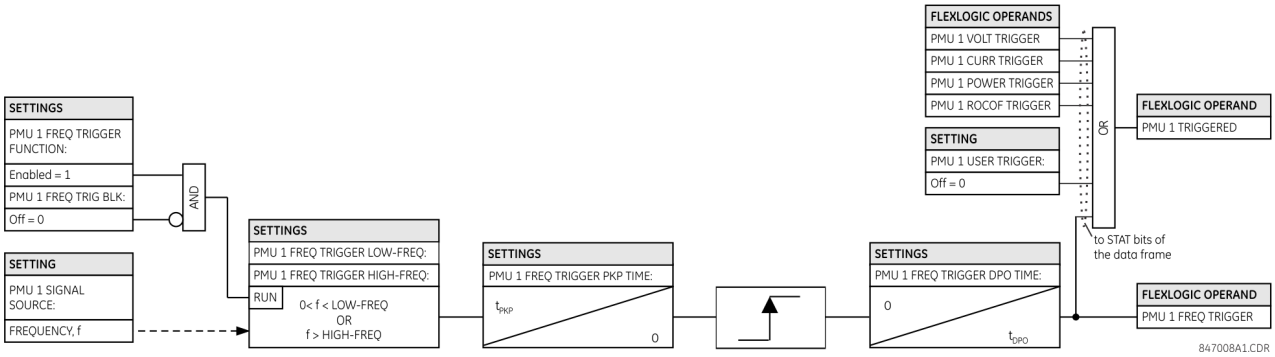

5.5.8.14 Voltage triggering

SETTINGS ⇨⇩ SYSTEM SETUP ⇨⇩ PHASOR MEASUREMENT UNIT ⇨⇩ PHASOR MEASUREMENT UNIT 1 ⇨⇩ PMU 1 TRIGGERING ⇨⇩ PMU 1 VOLTAGE TRIGGER

■ **PMU 1 VOLTAGE** ■ **TRIGGER**	⇔	**PMU 1 VOLT TRIGGER FUNCTION: Disabled**	Range: Enabled, Disabled
	⇕	**PMU 1 VOLT TRIGGER LOW-VOLT: 0.800 pu**	Range: 0.250 to 1.250 pu in steps of 0.001
	⇕	**PMU 1 VOLT TRIGGER HIGH-VOLT: 1.200 pu**	Range: 0.750 to 1.750 pu in steps of 0.001

⇕	**PMU 1 VOLT TRIGGER PKP TIME: 0.10 s**	Range: 0.00 to 600.00 s in steps of 0.01
⇕	**PMU 1 VOLT TRIGGER DPO TIME: 1.00 s**	Range: 0.00 to 600.00 s in steps of 0.01
⇕	**PMU 1 VOLT TRIG BLK: Off**	Range: FlexLogic operand
⇕	**PMU 1 VOLT TRIGGER TARGET: Self-reset**	Range: Self-reset, Latched, Disabled
⇧	**PMU 1 VOLT TRIGGER EVENTS: Disabled**	Range: Enabled, Disabled

This element responds to abnormal voltage. Separate thresholds are provided for low and high voltage. In terms of signaling its operation, the element does not differentiate between the undervoltage and overvoltage events. The trigger responds to the phase voltage signal of the Phasor Measurement Unit (PMU) source. All voltage channels (A, B, and C or AB, BC, and CA) are processed independently and can trigger the recorder. A minimum voltage supervision of 0.1 pu is implemented to prevent pickup on a de-energized circuit, similarly to the undervoltage protection element.

PMU 1 VOLT TRIGGER LOW-VOLT — Specifies the low threshold for the abnormal voltage trigger, in per-unit of the PMU source. 1 pu is a nominal voltage value defined as the nominal secondary voltage times VT ratio. The comparator applies a 1% hysteresis.

PMU 1 VOLT TRIGGER HIGH-VOLT — Specifies the high threshold for the abnormal voltage trigger, in per-unit of the PMU source. 1 pu is a nominal voltage value defined as the nominal secondary voltage times VT ratio. The comparator applies a 1% hysteresis.

PMU 1 VOLT TRIGGER PKP TIME — Use to filter out spurious conditions and avoid unnecessary triggering of the recorder.

PMU 1 VOLT TRIGGER DPO TIME — Use to extend the trigger after the situation returns to normal. This setting is of importance when using the recorder in the forced mode (recording as long as the triggering condition is asserted).

5

Figure 5-92: Voltage trigger logic

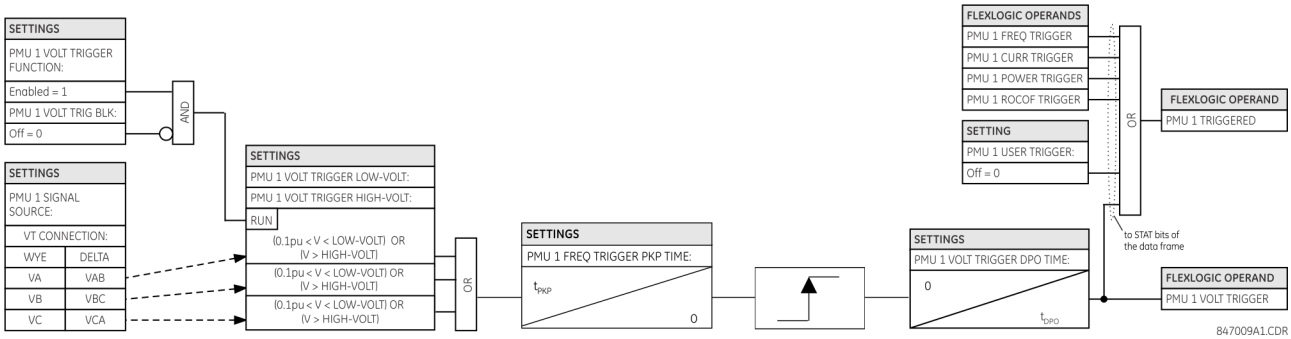

5.5.8.15 Current triggering

SETTINGS ⇨⇩ SYSTEM SETUP ⇨⇩ PHASOR MEASUREMENT UNIT ⇨⇩ PHASOR MEASUREMENT UNIT 1 ⇨⇩ PMU 1 TRIGGERING ⇨⇩ PMU 1 CURRENT TRIGGER

■ **PMU 1 CURRENT** ■ **TRIGGER**	⇔	**PMU 1 CURR TRIGGER FUNCTION: Disabled**	Range: Enabled, Disabled
	⇕	**PMU 1 CURR TRIGGER PICKUP: 1.800 pu**	Range: 0.100 to 30.000 pu in steps of 0.001
	⇕	**PMU 1 CURR TRIGGER PKP TIME: 0.10 s**	Range: 0.00 to 600.00 s in steps of 0.01
	⇕	**PMU 1 CURR TRIGGER DPO TIME: 1.00 s**	Range: 0.00 to 600.00 s in steps of 0.01

⇕	**PMU 1 CURR TRIG BLK: Off**	Range: FlexLogic operand
⇕	**PMU 1 CURR TRIGGER TARGET: Self-reset**	Range: Self-reset, Latched, Disabled
⇑	**PMU 1 CURR TRIGGER EVENTS: Disabled**	Range: Enabled, Disabled

This element responds to elevated current. The trigger responds to the phase current signal of the Phasor Measurement Unit (PMU) source. All current channel (A, B, and C) are processed independently and can trigger the recorder.

PMU 1 CURR TRIGGER PICKUP — Specifies the pickup threshold for the overcurrent trigger, in per unit of the PMU source. A value of 1 pu is a nominal primary current. The comparator applies a 3% hysteresis.

PMU 1 CURR TRIGGER PKP TIME — Use to filter out spurious conditions and avoid unnecessary triggering of the recorder.

PMU 1 CURR TRIGGER DPO TIME — Use to extend the trigger after the situation returns to normal. This setting is of importance when using the recorder in the forced mode (recording as long as the triggering condition is asserted).

Figure 5-93: Current trigger logic

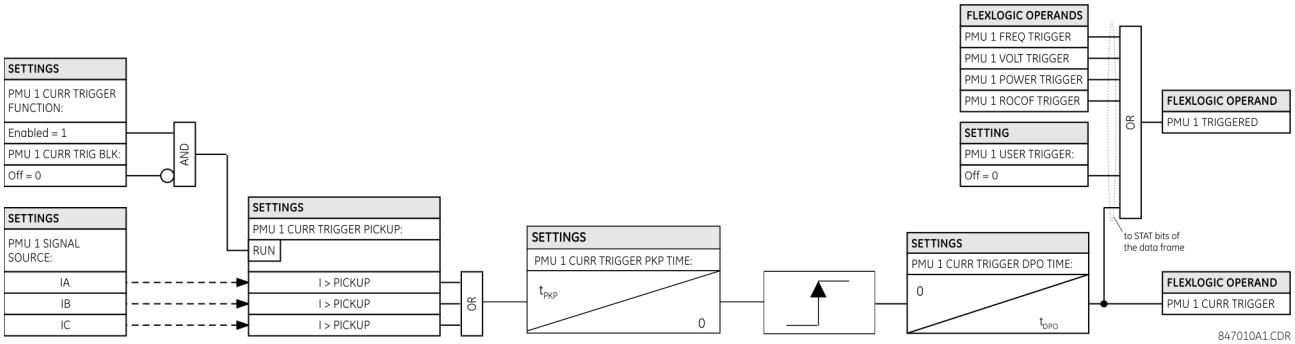

5.5.8.16 Power triggering

SETTINGS ⇨⇩ SYSTEM SETUP ⇨⇩ PHASOR MEASUREMENT UNIT ⇨⇩ PHASOR MEASUREMENT UNIT 1 ⇨⇩ PMU 1 TRIGGERING ⇨⇩ PMU 1 POWER TRIGGER

■ **PMU 1 POWER** ■ **TRIGGER**	⇔	**PMU 1 POWER TRIGGER FUNCTION: Disabled**	Range: Enabled, Disabled
	⇕	**PMU 1 POWER TRIGGER ACTIVE: 1.250 pu**	Range: 0.250 to 3.000 pu in steps of 0.001
	⇕	**PMU 1 POWER TRIGGER REACTIVE: 1.250 pu**	Range: 0.250 to 3.000 pu in steps of 0.001
	⇕	**PMU 1 POWER TRIGGER APPARENT: 1.250 pu**	Range: 0.250 to 3.000 pu in steps of 0.001
	⇕	**PMU 1 POWER TRIGGER PKP TIME: 0.10 s**	Range: 0.00 to 600.00 s in steps of 0.01
	⇕	**PMU 1 POWER TRIGGER DPO TIME: 1.00 s**	Range: 0.00 to 600.00 s in steps of 0.01
	⇕	**PMU 1 PWR TRIG BLK: Off**	Range: FlexLogic operand
	⇕	**PMU 1 POWER TRIGGER TARGET: Self-reset**	Range: Self-reset, Latched, Disabled
	⇑	**PMU 1 POWER TRIGGER EVENTS: Disabled**	Range: Enabled, Disabled

This element responds to abnormal power. Separate thresholds are provided for active, reactive, and apparent powers. In terms of signaling its operation, the element does not differentiate among the three types of power. The trigger responds to the single-phase and three-phase power signals of the Phasor Measurement Unit (PMU) source.

PMU 1 POWER TRIGGER ACTIVE — Specifies the pickup threshold for the active power of the source. For single-phase power, 1 pu is a product of 1 pu voltage and 1 pu current, or the product of nominal secondary voltage, the VT ratio and the nominal primary current. For the three-phase power, 1 pu is three times that for a single-phase power. The comparator applies a 3% hysteresis.

PMU 1 POWER TRIGGER REACTIVE — Specifies the pickup threshold for the reactive power of the source. For single-phase power, 1 pu is a product of 1 pu voltage and 1 pu current, or the product of nominal secondary voltage, the VT ratio and the nominal primary current. For the three-phase power, 1 pu is three times that for a single-phase power. The comparator applies a 3% hysteresis.

PMU 1 POWER TRIGGER APPARENT — Specifies the pickup threshold for the apparent power of the source. For single-phase power, 1 pu is a product of 1 pu voltage and 1 pu current, or the product of nominal secondary voltage, the VT ratio and the nominal primary current. For the three-phase power, 1 pu is three times that for a single-phase power. The comparator applies a 3% hysteresis.

PMU 1 POWER TRIGGER PKP TIME — Use to filter out spurious conditions and avoid unnecessary triggering of the recorder.

PMU 1 POWER TRIGGER DPO TIME — Use to extend the trigger after the situation returns to normal. This setting is of particular importance when using the recorder in the forced mode (recording as long as the triggering condition is asserted).

Figure 5-94: Power trigger logic

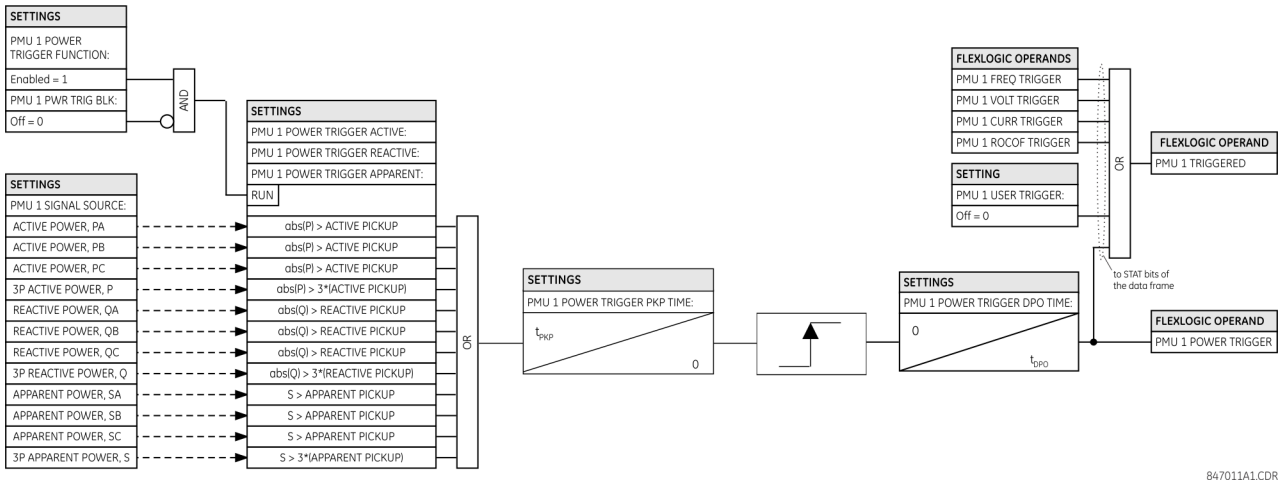

5.5.8.17 df/dt triggering

SETTINGS ⇨⇩ SYSTEM SETUP ⇨⇩ PHASOR MEASUREMENT UNIT ⇨⇩ PHASOR MEASUREMENT UNIT 1 ⇨⇩ PMU 1 TRIGGERING ⇨⇩ PMU 1 df/dt TRIGGER

■ PMU 1 df/dt ■ TRIGGER	⇔	**PMU 1 df/dt TRIGGER FUNCTION: Disabled**	Range: Enabled, Disabled
	⇩	**PMU 1 df/dt TRIGGER RAISE: 0.25 Hz/s**	Range: 0.10 to 15.00 Hz/s in steps of 0.01
	⇩	**PMU 1 df/dt TRIGGER FALL: 0.25 Hz/s**	Range: 0.10 to 15.00 Hz/s in steps of 0.01
	⇩	**PMU 1 df/dt TRIGGER PKP TIME: 0.10 s**	Range: 0.00 to 600.00 s in steps of 0.01
	⇩	**PMU 1 df/dt TRIGGER DPO TIME: 1.00 s**	Range: 0.00 to 600.00 s in steps of 0.01

⇕	**PMU 1 df/dt TRG BLK: Off**	Range: FlexLogic operand
⇕	**PMU 1 df/dt TRIGGER TARGET: Self-reset**	Range: Self-reset, Latched, Disabled
⇧	**PMU 1 df/dt TRIGGER EVENTS: Disabled**	Range: Enabled, Disabled

This element responds to frequency rate of change. Separate thresholds are provided for rising and dropping frequency. The trigger responds to the rate of change of frequency (df/dt) of the Phasor Measurement Unit (PMU) source.

PMU 1 df/dt TRIGGER RAISE — Specifies the pickup threshold for the rate of change of frequency in the raising direction (positive df/dt). The comparator applies a 4% hysteresis.

PMU 1 df/dt TRIGGER FALL — Specifies the pickup threshold for the rate of change of frequency in the falling direction (negative df/dt). The comparator applies a 4% hysteresis.

PMU 1 df/dt TRIGGER PKP TIME — Use to filter out spurious conditions and avoid unnecessary triggering of the recorder.

PMU 1 df/dt TRIGGER DPO TIME — Use to extend the trigger after the situation returns to normal. This setting is of importance when using the recorder in the forced mode (recording as long as the triggering condition is asserted).

Figure 5-95: Rate of change of frequency trigger logic

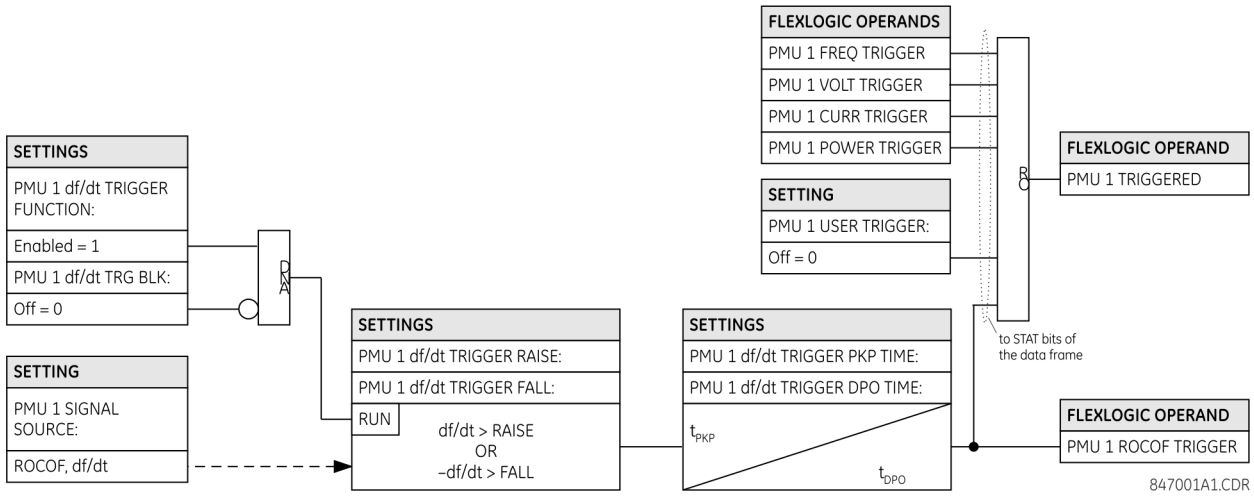

5.5.8.18 PMU recording

SETTINGS ⇨⇩ SYSTEM SETUP ⇨⇩ PHASOR MEASUREMENT UNIT ⇨⇩ PHASOR MEASUREMENT UNIT 1 ⇨⇩ RECORDING PMU 1

■ **PMU 1** ■ **RECORDING**	⇔	**PMU 1 FUNCTION: Disabled**	Range: Enabled, Disabled
	⇕	**PMU 1 NO OF TIMED RECORDS: 10**	Range: 2 to 128 in steps of 1
	⇕	**PMU 1 TRIGGER MODE: Automatic Overwrite**	Range: Automatic Overwrite, Protected
	⇧	**PMU 1 TIMED TRIGGER POSITION: 10%**	Range: 1 to 50% in steps of 1

The length of the PMU record is variable and depends on some settings and configuration, such as **PMU 1 NO OF TIMED RECORDS**, **PMU 1 RATE**, number of Synchrophasors, Analogs and Digitals configured in each PMU. There is a fixed amount of data storage for PMU recording; the more records captured, the less the recording length captured per record. See the

ACTUAL VALUES ⇨ RECORDS ⇨⇩ PMU RECORDS ⇨ PMU 1 RECORDING menu to view the actual PMU record length captured per record. The following table provides sample configurations with corresponding seconds per record. The minimum number of PMU records is two. The third to fifth columns is the number of configured values recorded in each record.

Table 5-20: PMU record length example

Records	Frames per second	Synchrophasors	Analogs	Digitals	Record length (seconds)
3	30	14	8	16	590.4
16	30	14	8	16	138.9
32	30	14	8	16	71.5
64	30	14	8	16	36.3
3	60	14	8	16	295.2
16	60	14	8	16	69.4
32	60	14	8	16	35.7
64	60	14	8	16	18.1

PMU 1 FUNCTION — This setting enables or disables the recorder for PMU 1. The rate is fixed at the reporting rate set within the aggregator (that is, Aggregator 1).

PMU 1 NO OF TIMED RECORDS — Specifies the number of timed records that are available for a given logical PMU 1. The length of each record is equal to the available memory divided by the content size and number of records. As the number of records is increased, the available storage for each record is reduced. The relay supports a maximum of 128 records in either timed or forced mode.

PMU 1 TRIGGER MODE — Specifies what happens when the recorder uses its entire available memory storage. With "Automatic Overwrite," the last record is erased to facilitate new recording, when triggered. Under the "Protected" selection, the recorder stops creating new records when the entire memory is used up by the old uncleared records.

PMU 1 TIMED TRIGGER POSITION — Specifies the amount of pre-trigger data as a percent of the entire record. This setting applies only to the timed mode of recording.

5.5.8.19 Aggregators

SETTINGS ⇨⇩ SYSTEM SETUP ⇨⇩ PHASOR MEASUREMENT UNIT ⇨⇩ PMU AGGREGATOR 1

■ PMU AGGREGATOR 1 ■	⇔	PMU AGGREGATOR 1 PROTOCOL: NONE	Range: NONE, 37.118, 90-5
	⇩	PMU AGGREGATOR 1 IDCODE: 1	Range: 1 to 65534 in steps of 1
	⇩	PMU AGGREGATOR 1 INCLUDE PMU1: No	Range: No, Yes
	⇩	■ C37.118 AGGR 1 ■ CONFIGURATION	See below
	⇧	■ 90-5 AGGR 1 ■ CONFIGURATION	See below

NOTE When the protocol selection is set via the software or keypad, all aggregators whose protocol is not set to None are set to the last protocol saved (that is, IEEE C37.118 or IEC 61850-90-5) to any aggregators, as both IEEE C37.118 and IEC 61850-90-5 simultaneous streaming is not possible.

PMU AGGREGATOR1 PROTOCOL — Selects if the IEEE C37.118 or IEC 61850-90-5 technical report is used. Because one protocol is supported at a time in a device, this setting applies to all PMU aggregators.

PMU AGGREGATOR1 IDCODE — Numeric identifier of the Aggregator / PDC function. In an IEEE C37.118 output stream, this identifies the ID of the aggregator, which is only used if there is more than 1 PMU mapped into an aggregator.

PMU AGGREGATOR1 PMU1 — If set to "Yes," aggregator 1 includes the PMU1 data set in the reporting data stream. AGGREGATOR1 does not include PMU1 data set in the report if set to "No."

NOTE

Only PMUs with same reporting rate can be assigned to the same PMU AGGREGATOR.

SETTINGS ⇨⇩ SYSTEM SETUP ⇨⇩ PHASOR MEASUREMENT UNIT ⇨⇩ PMU AGGREGATOR 1 ⇩ C37.118 AGGR 1 CONFIGURATION

■ C37.118 AGGR 1 ■ CONFIGURATION	⇔	PMU AGGREGATOR 1 TCP PORT: 4712	Range: 0 to 65534
	⇩	PMU AGGREGATOR 1: UDP PORT: 4713	Range: 0 to 65534
	⇧	PMU AGGREGATOR 1: PDC CONTROL: Disabled	Range: Disabled, Enabled

PMU AGGREGATOR 1 TCP PORT — Selects the TCP port number to be used by this aggregator for network reporting. All ports, even those of unused aggregators, must be valid and unique to avoid port number collisions.

PMU AGGREGATOR 1 UDP PORT — Selects the UDP port number to be used by this aggregator for network reporting. All ports, even those of unused aggregators, must be valid and unique to avoid port number collisions.

PMU AGGREGATOR 1 PDC CONTROL — The synchrophasor standard allows for user-defined controls originating at the PDC, to be executed on the PMU. The control is accomplished via an extended command frame. The relay decodes the first word of the extended field, EXTFRAME, to drive 16 dedicated FlexLogic operands. Each aggregator supports 16 FlexLogic operands, as shown in the table. The operands are asserted for five seconds following reception of the command frame. If the new command frame arrives within the five-second period, the FlexLogic operands are updated, and the five-second timer restarts. This setting enables or disables the control. When enabled, all 16 operands for each aggregator are active; when disabled, all 16 operands for each aggregator remain reset.

5

Table 5-21: FlexLogic operands supported by aggregator

Operand type	Operand syntax	Operand description
ELEMENT: Synchrophasor, phasor data, concentrator	AGTR1 PDC CNTRL 1	Phasor data concentrator asserts control bit 1, as received via the network
as above	AGTR1 PDC CNTRL 2	Phasor data concentrator asserts control bit 2 as received via the network
as above	AGTR1 PDC CNTRL 3	Phasor data concentrator asserts control bit 3 as received via the network
⇩		
as above	AGTR1 PDC CNTRL 16	Phasor data concentrator asserts control bit 16, as received via the network
as above	AGTR2 PDC CNTRL 1	Phasor data concentrator asserts control bit 1 as received via the network
as above	AGTR2 PDC CNTRL 2	Phasor data concentrator asserts control bit 2 as received via the network
as above	AGTR2 PDC CNTRL 3	Phasor data concentrator asserts control bit 3 as received via the network
⇩		
as above	AGTR1 PDC CNTRL 16	Phasor data concentrator asserts control bit 16, as received via the network

SETTINGS ⇨⇩ SYSTEM SETUP ⇨⇩ PHASOR MEASUREMENT UNIT ⇨⇩ PMU AGGREGATOR 1 ⇩ 90-5 AGGR 1 CONFIGURATION

■ 90-5 AGGR 1 ■ CONFIGURATION	⇔	PMU AGGREGATOR 1 NAME:	Range: 56-character ASCII text (blank by default)
	⇩	PMU AGGREGATOR 1 PORT: 1	Range: 1, 2, 3

⇕	**PMU AGGREGATOR 1 UDP PORT: 102**	Range: 0 to 65534 in steps of 1
⇧	**PMU AGGREGATOR 1 NUMBER OF ASDUs: 1**	Range: 1 to 4

PMU AGGREGATOR 1 NAME — A user-defined visible string of characters (maximum 56) to identify the source of the stream. This value, concatenated with the Aggregator IDCode and Aggregator Class of Service, is mapped into the IEC 61850 MSVID filed in the output stream. The field allows 65 characters, but uses the first 56 characters.

AGGREGATOR 1: PHYSICAL PORT — This setting determines the physical ports through which the synchrophasor traffic is transmitted. The range is 1, 2, 3.

PMU AGGREGATOR 1: UDP PORT — This setting selects the UDP port number that is used by this dataset for network reporting. A default setting value for IEC 6150-90-5 is provided.

PMU AGGREGATOR 1: NUMBER OF ASDUs — This setting sets the number of Application Service Data Units (ASDUs) from 1 through to 4.

Table 5-22: Number of ASDUs

Settings for ASDU	Transmission
1	ASDU at T0 (current values)
2	ASDU at T-1 (previous values) + ASDU at T0 (current values)
3	ASDU at T-2 (previous values) + ASDU at T-1 (previous values) + ASDU at T0 (current values)
4	ASDU at T-3 (previous values) + ASDU at T-2 (previous values) + ASDU at T-1 (previous values) + ASDU at T0 (current values)

5.5.8.20 Control blocks

SETTINGS ⇨⇩ SYSTEM SETUP ⇨⇩ PHASOR MEASUREMENT UNIT ⇨⇩ 90–5 R-SV CB 1 CONFIGURATION

■ 90-5 R-SV CB 1 ■ CONFIGURATION	⇔	**R-SV CB1 SVENA: Off**	Range: FlexLogic operand
	⇕	**R-SV CB1 CLIENT CTRL: Off**	Range: FlexLogic operand
	⇕	**R-SV CB1 SVENA DFLT: Off**	Range: FlexLogic operand
	⇕	**R-SV CB1 CONFREV: 1**	Range: 1 to 4294967295
	⇕	**R-SV CB1 PRIORITY: 4**	Range: 0 to 7
	⇕	**R-SV CB1 CSCP CLASS: Expedited Forwarding**	Range: None, Expedited Forwarding
	⇕	**R-SV CB1 VLAN ID: 0**	Range: 0 to 4095
	⇕	**R-SV CB1 APPID: 0**	Range: 0 to 16383
	⇕	**R-SV CB1 DEST IP: 224.0.0.0**	Range: 0 to 255.255.255.255
	⇧	**R-SV CB1 SECURITY: 0**	Range: 0 to 2

R-SV CB1 SVENA — The SV Stream Control is set by either toggling an assigned FlexLogic operand or a remote client write, to start and stop the streaming of R-SV frames. If remote client control is disabled, a negative response is provided to the client in response to a write attempt. A FlexLogic operand (SvEna) is provided for each Aggregator that reflects the state of the SvEna control where “1”= Enabled and “0”=Disabled. The figure shows the logic for setting the SvEna control bit.

Figure 5-96: Logic for setting SvEna control bit

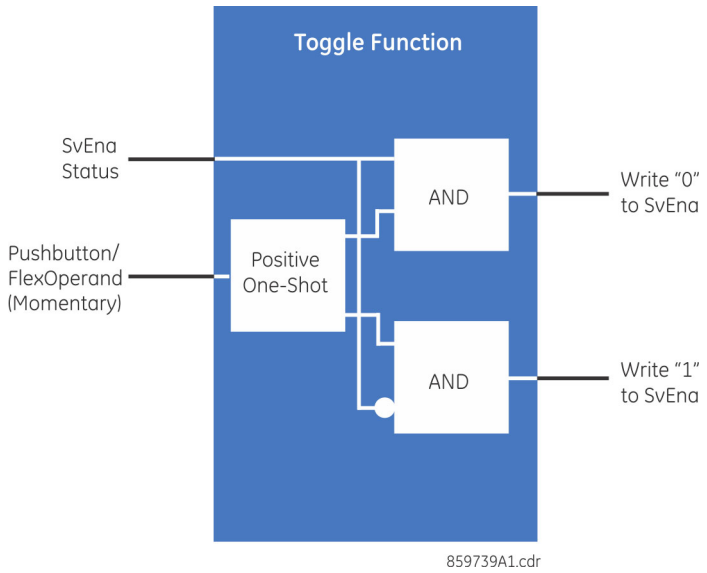

R-SV CB1 CLIENT CONTRL — This setting determines if a client can write to the reserve bit. When the assigned FlexLogic operand is a logic 1 state, remote clients can write to both the reserve bit and the SvEna bit. When the FlexLogic operand is a logic 0 state, the remote client writes to the reserve bit, the SvEna is rejected by the UR, and a negative response with the appropriate Service Error is returned to the client.

5

R-SV CB1 SVENA DFLT — This setting sets the default state of the stream (On or Off) on power-up or restart.

R-SV CB1 CONFREV — The relay increments the Configuration revision every time the configuration is changed. This setting allows the user to reset the configuration back to 1 or a value from 1 to 4294967295.

R-SV CB1 PRIORITY — A value from 0 through 7. The default value is 4.

R-SV CB1 DSCP CLASS — The value represents the IPv4 Differentiated Services (formerly called TypeOfService) value. The default value is set for Expedited Forwarding (101110B (46 or 2EH). This value provides priority routing, when supported in the routers.

R-SV CB1 VLAN ID — A range of values limited from 0 to 4095.

R-SV CB1 APPID — This setting allows the selection of a specific application ID for each sending device.

R-SV CB1 DEST IP — This is the destination multicast IP address that is entered in Standard IPV4 address format. The valid range for IPv4 is from 224.0.0.0 to 239.255.255.255. The UR does not test the address entered.

R-SV CB1 SECURITY — This setting selects the level of security and authentication used, as outlined in the following table, and is in the form of an enumeration as per standard. The range is 0 to 2.

NOTE

Shaded settings in the table are not supported in firmware 7.0.

Table 5-23: Security

Enumeration	Authentication	Encryption
0	No	No
1	Yes	No
2	Yes	Yes

5.6 FlexLogic

5.6.1 FlexLogic operands

For flexibility, the arrangement of internal digital logic combines fixed and user-programmed parameters. Logic upon which individual features are designed is fixed, and all other logic, from contact input signals through elements or combinations of elements to contact outputs, is variable. The user has complete control of all variable logic through FlexLogic. In general, the system receives analog and digital inputs that it uses to produce analog and digital outputs. The figure shows major subsystems of a generic UR-series relay involved in this process.

Figure 5-97: UR architecture overview

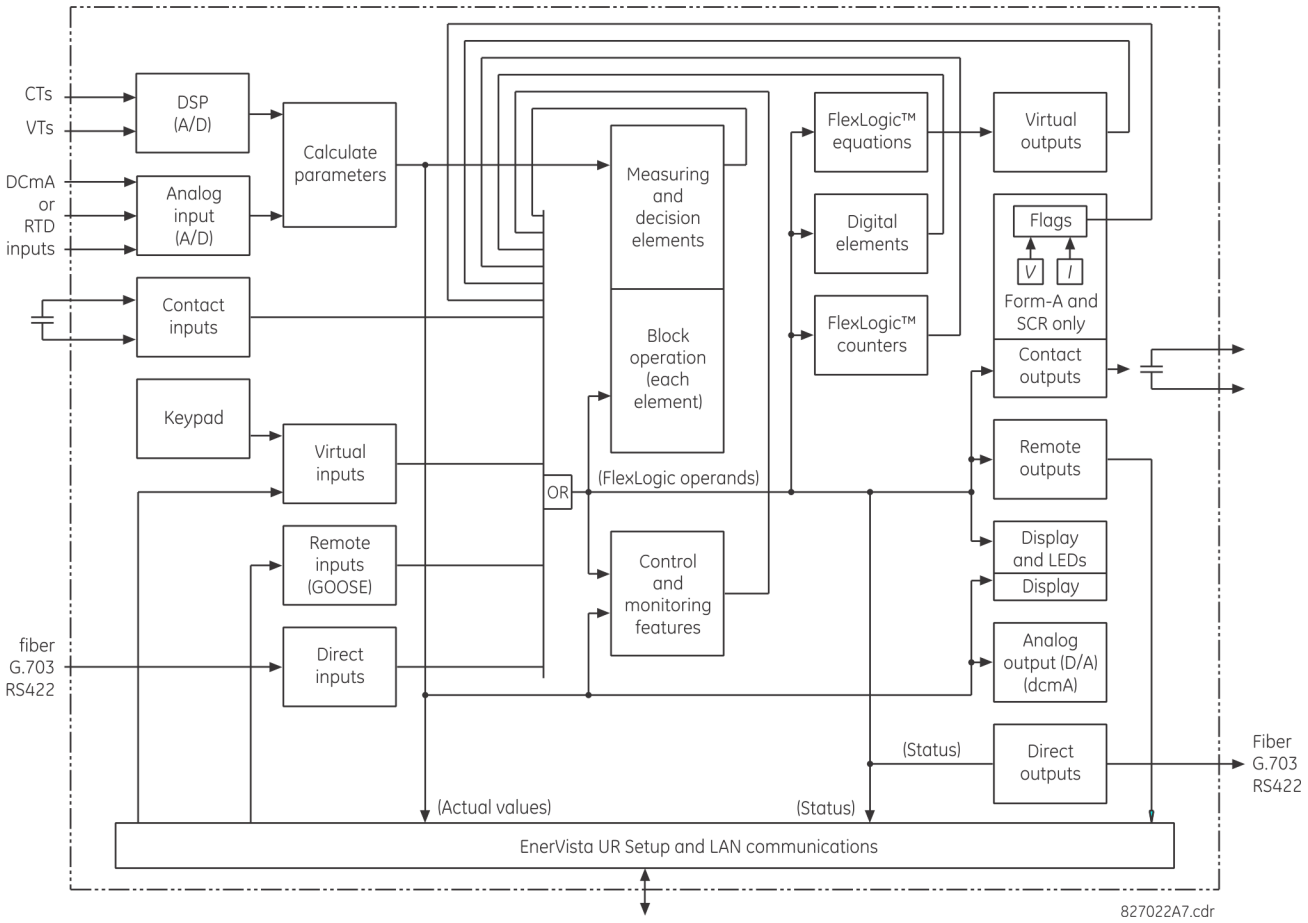

The states of all digital signals used in the L90 are represented by flags (or FlexLogic operands, which are described later in this section). A digital "1" is represented by a set flag. Any external contact change-of-state can be used to block an element from operating, as an input to a control feature in a FlexLogic equation, or to operate a contact output. The state of the contact input can be displayed locally or viewed remotely via the communications facilities provided. If a simple scheme where a contact input is used to block an element is wanted, this selection is made when programming the element. This capability also applies to the other features that set flags: elements, virtual inputs, remote inputs, schemes, and human operators.

If more complex logic than shown in the figure is required, it is implemented via FlexLogic. For example, to have the closed state of contact input H7a and the operated state of the phase undervoltage element block the operation of the phase time overcurrent element, the two control input states are programmed in a FlexLogic equation. This equation ANDs the two control inputs to produce a virtual output that is then selected when programming the phase time overcurrent to be used as a blocking input. Virtual outputs can only be created by FlexLogic equations.

Traditionally, protective relay logic has been relatively limited. Any unusual applications involving interlocks, blocking, or supervisory functions had to be hard-wired using contact inputs and outputs. FlexLogic minimizes the requirement for auxiliary components and wiring while making more complex schemes possible.

The logic that determines the interaction of inputs, elements, schemes, and outputs is field-programmable through the use of logic equations that are sequentially processed. The use of virtual inputs and outputs in addition to hardware is available internally and on the communication ports for other relays to use (distributed FlexLogic).

FlexLogic allows users to customize the relay through a series of equations that consist of operators and operands. The operands are the states of inputs, elements, schemes, and outputs. The operators are logic gates, timers, and latches (with set and reset inputs). A system of sequential operations allows any combination of operands to be assigned as inputs to specified operators to create an output. The final output of an equation is a numbered register called a virtual output. Virtual outputs can be used as an input operand in any equation, including the equation that generates the output, as a seal-in or other type of feedback.

A FlexLogic equation consists of parameters that are either operands or operators. Operands have a logic state of 1 or 0. Operators provide a defined function, such as an AND gate or a Timer. Each equation defines the combinations of parameters to be used to set a Virtual Output flag. Evaluation of an equation results in either a 1 (=ON, or flag set) or 0 (=OFF, or flag not set). Each equation is evaluated at least four times every power system cycle.

Some types of operands are present in the relay in multiple instances, for example contact and remote inputs. These types of operands are grouped together (for presentation purposes only) on the front panel display. The table lists characteristics of the different types of operands.

Table 5-24: L90 FlexLogic operand types

Operand type	State	Example of format	Characteristics [Input Is '1' (= ON) if...]
Contact Input	On	Cont Ip On	Voltage is applied presently to the input (external contact closed)
	Off	Cont Ip Off	Voltage is not applied presently to the input (external contact open)
Contact Output (type Form-A contact only)	Contact Closed	Cont Op 1 Closed	Contact output is closed
	Current On	Cont Op 1 Ion	Current is flowing through the contact
	Voltage On	Cont Op 1 VOn	Voltage exists across the contact
	Voltage Off	Cont Op 1 VOff	Voltage does not exist across the contact
Direct Input	On	DIRECT INPUT 1 On	The direct input is presently in the ON state
Element (Analog)	Pickup	PHASE TOC1 PKP	The tested parameter is presently above the pickup setting of an element that responds to rising values or below the pickup setting of an element that responds to falling values
	Dropout	PHASE TOC1 DPO	This operand is the logical inverse of the above PKP operand
	Operate	PHASE TOC1 OP	The tested parameter has been above/below the pickup setting of the element for the programmed delay time, or has been at logic 1 and is now at logic 0 but the reset timer has not finished timing
	Block	PHASE TOC1 BLK	The output of the comparator is set to the block function
Element (Digital)	Pickup	Dig Element 1 PKP	The input operand is at logic 1
	Dropout	Dig Element 1 DPO	This operand is the logical inverse of the above PKP operand
	Operate	Dig Element 1 OP	The input operand has been at logic 1 for the programmed pickup delay time, or has been at logic 1 for this period and is now at logic 0 but the reset timer has not finished timing
Element (Digital Counter)	Higher than	Counter 1 HI	The number of pulses counted is above the set number
	Equal to	Counter 1 EQL	The number of pulses counted is equal to the set number
	Lower than	Counter 1 LO	The number of pulses counted is below the set number
Fixed	On	On	Logic 1
	Off	Off	Logic 0

Operand type	State	Example of format	Characteristics [Input Is '1' (= ON) if...]
RxGOOSE Boolean	On	RxGOOSE Boolean 1 On	The RxGOOSE Boolean is presently in the ON state
Virtual Input	On	Virt Ip 1 On	The virtual input is presently in the ON state
Virtual Output	On	Virt Op 1 On	The virtual output is presently in the set state (that is, evaluation of the equation that produces this virtual output results in a "1")

The following table lists the operands available for the relay. The operands can be viewed online by entering the IP address of the relay in a web browser and accessing the Device Information Menu.

Table 5-25: L90 FlexLogic operands

Operand type	Operand syntax	Operand description
ANNUNCIATOR Graphical front panel	ANY ANCTR ABNORMAL ANY ANCTR ALARMED	On for one second when any annunciator window state changes from normal to abnormal On while any annunciator window state is abnormal
CONTROL PUSHBUTTONS Enhanced and basic front panels	CONTROL PUSHBTN 1 ON CONTROL PUSHBTN 2 ON CONTROL PUSHBTN 3 ON CONTROL PUSHBTN 4 ON CONTROL PUSHBTN 5 ON CONTROL PUSHBTN 6 ON CONTROL PUSHBTN 7 ON	Control pushbutton 1 is being pressed Control pushbutton 2 is being pressed Control pushbutton 3 is being pressed Control pushbutton 4 is being pressed Control pushbutton 5 is being pressed Control pushbutton 6 is being pressed Control pushbutton 7 is being pressed
CYBERSENTRY	ROLE ADMIN ACT ROLE SUPERVISOR ACT ROLE ENGINEER ACT ROLE OPERATOR ACT ROLE OBSERVER ACT AUTHENTICATION FAIL UNAUTH FW ATTEMPT UNAUTH SETTING WRITE	Administrator role is active and is set to true when that is the case Supervisor role is active and is set to true when that is the case Engineer role is active and is set to true when that is the case Operator role is active and is set to true when that is the case Observer role is active and is set to true when that is the case Operand set for Failed Authentication self-test and alarm Operand set for firmware lock self-test and alarm Operand set for settings lock self-test and alarm
ELEMENT: 50DD supervision	50DD SV 50DD SV 87LG	Disturbance detector has operated Disturbance detector for 87LG has operated
ELEMENT: 87L current differential	87L DIFF OP 87L DIFF OP A 87L DIFF OP B 87L DIFF OP C 87L DIFF RECVD DTT A 87L DIFF RECVD DTT B 87L DIFF RECVD DTT C 87L DIFF KEY DTT 87L DIFF PFLL FAIL 87L DIFF CH ASYM DET 87L DIFF CH1 FAIL 87L DIFF CH2 FAIL 87L DIFF CH1 LOSTPKT 87L DIFF CH2 LOSTPKT 87L DIFF CH1 CRCFAIL 87L DIFF CH2 CRCFAIL 87L DIFF CH1 ID FAIL 87L DIFF CH2 ID FAIL 87L DIFF GPS FAIL 87L DIFF 1 MAX ASYM 87L DIFF 2 MAX ASYM 87L DIFF 1 TIME CHNG 87L DIFF 2 TIME CHNG 87L DIFF GPS 1 FAIL 87L DIFF GPS 2 FAIL 87L DIFF BLOCKED 87L DIFF PKP G 87L DIFF OP G	At least one phase of current differential has operated Phase A of current differential has operated Phase B of current differential has operated Phase C of current differential has operated Direct transfer trip phase A has been received Direct transfer trip phase B has been received Direct transfer trip phase C has been received Direct transfer trip is keyed Phase and frequency lock loop (PFLL) has failed Channel asymmetry greater than 1.5 ms detected Channel 1 has failed Channel 2 has failed Exceeded maximum lost packet threshold on channel 1 Exceeded maximum lost packet threshold on channel 2 Exceeded maximum CRC error threshold on channel 1 Exceeded maximum CRC error threshold on channel 2 The ID check for a peer L90 on channel 1 has failed The ID check for a peer L90 on channel 2 has failed The GPS signal failed or is not configured properly at any terminal Asymmetry on channel 1 exceeded preset value Asymmetry on channel 2 exceeded preset value Change in round trip delay on channel 1 exceeded preset value Change in round trip delay on channel 2 exceeded preset value GPS failed at remote terminal 1 (channel 1) GPS failed at remote terminal 1 (channel 2) The 87L function is blocked due to communication problems The ground differential element has picked up The ground differential element has operated

Operand type	Operand syntax	Operand description
ELEMENT: 87L in-zone transformer compensation	87L HARM2 A OP	Asserted when phase A of second harmonic of the transformer magnetizing inrush current inhibits the current differential element from operating.
	87L HARM2 B OP	Asserted when phase B of second harmonic of the transformer magnetizing inrush current inhibits the current differential element from operating.
	87L HARM2 C OP	Asserted when phase C of second harmonic of the transformer magnetizing inrush current inhibits the current differential element from operating.
ELEMENT: 87L differential trip	87L TRIP OP	At least one phase of the trip output element has operated
	87L TRIP OP A	Phase A of the trip output element has operated
	87L TRIP OP B	Phase B of the trip output element has operated
	87L TRIP OP C	Phase C of the trip output element has operated
	87L TRIP 1P OP	Single-pole trip is initiated
	87L TRIP 3P OP	Three-pole trip is initiated
ELEMENT: Autoreclose (1P/3P)	AR ENABLED	Autoreclosure is enabled and ready to perform
	AR DISABLED	Autoreclosure is disabled
	AR RIP	Autoreclosure is in “reclose-in-progress” state
	AR 1-P RIP	A single-pole reclosure is in progress
	AR 3-P/1 RIP	A three-pole reclosure is in progress, via dead time 1
	AR 3-P/2 RIP	A three-pole reclosure is in progress, via dead time 2
	AR 3-P/3 RIP	A three-pole reclosure is in progress, via dead time 3
	AR 3-P/4 RIP	A three-pole reclosure is in progress, via dead time 4
	AR LO	Autoreclosure is in lockout state
	AR BKR1 BLK	Reclosure of breaker 1 is blocked
	AR BKR2 BLK	Reclosure of breaker 2 is blocked
	AR CLOSE BKR1	Reclose breaker 1 signal
	AR CLOSE BKR2	Reclose breaker 2 signal
	AR FORCE 3-P TRIP	Force any trip to a three-phase trip
	AR SHOT CNT > 0	The first ‘CLOSE BKR X’ signal has been issued
	AR SHOT CNT = 1	Shot count is equal to 1
	AR SHOT CNT = 2	Shot count is equal to 2
	AR SHOT CNT = 3	Shot count is equal to 3
	AR SHOT CNT = 4	Shot count is equal to 4
	AR MODE = 1	Autoreclose mode equal to 1 (1 and 3 pole mode)
	AR MODE = 2	Autoreclose mode equal to 2 (1 pole mode)
	AR MODE = 3	Autoreclose mode equal to 3 (3 pole-A mode)
	AR MODE = 4	Autoreclose mode equal to 4 (3 pole-B mode)
	AR MODE SWITCH FAIL	Autoreclose mode switching is attempted, but failed
	AR ZONE 1 EXTENT	The zone 1 distance function must be set to the extended overreach value
	AR INCOMPLETE SEQ	The incomplete sequence timer timed out
	AR RESET	Autoreclose has been reset either manually or by the reset timer
ELEMENT: Auxiliary overvoltage	AUX OV1 PKP	Auxiliary overvoltage element has picked up
	AUX OV1 DPO	Auxiliary overvoltage element has dropped out
	AUX OV1 OP	Auxiliary overvoltage element has operated
	AUX OV2	Same set of operands as shown for AUX OV1
ELEMENT: Auxiliary undervoltage	AUX UV1 PKP	Auxiliary undervoltage element has picked up
	AUX UV1 DPO	Auxiliary undervoltage element has dropped out
	AUX UV1 OP	Auxiliary undervoltage element has operated
	AUX UV2 to 3	Same set of operands as shown for AUX UV1
ELEMENT: Breaker flashover	BKR 1 FLSHOVR PKP A	Breaker 1 flashover element phase A has picked up
	BKR 1 FLSHOVR PKP B	Breaker 1 flashover element phase B has picked up
	BKR 1 FLSHOVR PKP C	Breaker 1 flashover element phase C has picked up
	BKR 1 FLSHOVR PKP	Breaker 1 flashover element has picked up
	BKR 1 FLSHOVR OP A	Breaker 1 flashover element phase A has operated
	BKR 1 FLSHOVR OP B	Breaker 1 flashover element phase B has operated
	BKR 1 FLSHOVR OP C	Breaker 1 flashover element phase C has operated
	BKR 1 FLSHOVR OP	Breaker 1 flashover element has operated
	BKR 1 FLSHOVR DPO A	Breaker 1 flashover element phase A has dropped out
	BKR 1 FLSHOVR DPO B	Breaker 1 flashover element phase B has dropped out
	BKR 1 FLSHOVR DPO C	Breaker 1 flashover element phase C has dropped out
	BKR 1 FLSHOVR DPO	Breaker 1 flashover element has dropped out
	BKR 2 FLSHOVR	Same set of operands as shown for BKR 1 FLSHOVR

Operand type	Operand syntax	Operand description
ELEMENT: Breaker arcing	BKR ARC 1 OP	Breaker arcing current 1 has operated
	BKR ARC 1 DPO	Breaker arcing current 1 has dropped out
	BKR ARC 1 MAX OP	Breaker arcing current 1 max interrupting current has operated
	BKR ARC 1 MAX DPO	Breaker arcing current 1 max interrupting current has dropped out
	BKR ARC 2 OP	Breaker arcing current 2 has operated
	BKR ARC 2 DPO	Breaker arcing current 2 has dropped out
	BKR ARC 2 MAX OP	Breaker arcing current 2 max interrupting current has operated
	BKR ARC 2 MAX DPO	Breaker arcing current 2 max interrupting current has dropped out
	BKR ARC 3 to 4	Same set of operands as shown for BKR ARC 1
ELEMENT: Breaker failure	BKR FAIL 1 RETRIPA	Breaker failure 1 re-trip phase A (only for 1-pole schemes)
	BKR FAIL 1 RETRIPB	Breaker failure 1 re-trip phase B (only for 1-pole schemes)
	BKR FAIL 1 RETRIPC	Breaker failure 1 re-trip phase C (only for 1-pole schemes)
	BKR FAIL 1 RETRIP	Breaker failure 1 re-trip 3-phase
	BKR FAIL 1 T1 OP	Breaker failure 1 timer 1 is operated
	BKR FAIL 1 T2 OP	Breaker failure 1 timer 2 is operated
	BKR FAIL 1 T3 OP	Breaker failure 1 timer 3 is operated
	BKR FAIL 1 TRIP OP	Breaker failure 1 trip is operated
	BKR FAIL 2 to 4	Same set of operands as shown for BKR FAIL 1
ELEMENT: Breaker restrike	BRK RESTRIKE 1 OP	Breaker restrike detected in any phase of the breaker control 1 element
	BRK RESTRIKE 1 OP A	Breaker restrike detected in phase A of the breaker control 1 element
	BRK RESTRIKE 1 OP B	Breaker restrike detected in phase B of the breaker control 1 element
	BRK RESTRIKE 1 OP C	Breaker restrike detected in phase C of the breaker control 1 element
	BKR RESTRIKE 2	Same set of operands as shown for BKR RESTRIKE 1
ELEMENT: Breaker control	BREAKER 1 OFF CMD	Breaker 1 3-pole open command/trip initiated
	BREAKER 1 ON CMD	Breaker 1 close command initiated
	BREAKER 1 ΦA BAD ST	Breaker 1 phase A bad status is detected (discrepancy between the 52/a and 52/b contacts)
	BREAKER 1 ΦA INTERM	Breaker 1 phase A intermediate status is detected (transition from one position to another)
	BREAKER 1 ΦA CLSD	Breaker 1 phase A is closed
	BREAKER 1 ΦA OPEN	Breaker 1 phase A is open
	BREAKER 1 ΦB BAD ST	Breaker 1 phase B bad status is detected (discrepancy between the 52/a and 52/b contacts)
	BREAKER 1 ΦB INTERM	Breaker 1 phase B intermediate status is detected (transition from one position to another)
	BREAKER 1 ΦB CLSD	Breaker 1 phase B is closed
	BREAKER 1 ΦB OPEN	Breaker 1 phase B is open
	BREAKER 1 ΦC BAD ST	Breaker 1 phase C bad status is detected (discrepancy between the 52/a and 52/b contacts)
	BREAKER 1 ΦC INTERM	Breaker 1 phase C intermediate status is detected (transition from one position to another)
	BREAKER 1 ΦC CLSD	Breaker 1 phase C is closed
	BREAKER 1 ΦC OPEN	Breaker 1 phase C is open
	BREAKER 1 BAD STATUS	Breaker 1 bad status is detected on any pole
	BREAKER 1 CLOSED	Breaker 1 is closed
	BREAKER 1 OPEN	Breaker 1 is open
	BREAKER 1 DISCREP	Breaker 1 has discrepancy
	BREAKER 1 TROUBLE	Breaker 1 trouble alarm
	BREAKER 1 MNL OPEN	Breaker 1 manual open
	BREAKER 1 MNL CLS	Breaker 1 manual close
	BREAKER 1 TRIP A	Breaker 1 trip phase A command
	BREAKER 1 TRIP B	Breaker 1 trip phase B command
	BREAKER 1 TRIP C	Breaker 1 trip phase C command
	BREAKER 1 ANY P OPEN	At least one pole of breaker 1 is open
	BREAKER 1 ONE P OPEN	Only one pole of breaker 1 is open
	BREAKER 1 OOS	Breaker 1 is out of service
	BREAKER 1 TAG ON	Breaker 1 tagged so manual trip and close and autoreclose are blocked
	BREAKER 1 TAG OFF	Breaker 1 not tagged
	BREAKER 1 SUBD CLSD	Breaker 1 status manually substituted to closed
	BREAKER 1 SUBD OPEN	Breaker 1 status manually substituted to open
	BREAKER 1 BYPASS ON	Breaker 1 control interlocking is manually bypassed
	BREAKER 1 BYPASS OFF	Breaker 1 control interlocking is not manually bypassed
	BREAKER 1 BLK RCLS	Breaker 1 command to manually block autoreclose
	BREAKER 1 ENA RCLS	Breaker 1 command to manually enable autoreclose
	BREAKER 2 to 4	Same set of operands as shown for BREAKER 1

Operand type	Operand syntax	Operand description
ELEMENT: Broken conductor	BROKEN CONDUCT 1 OP BROKEN CONDUCT 1 PKP	Asserted when the broken conductor 1 element operates Asserted when the broken conductor 1 element picks up
	BROKEN CONDUCT 2	Same set of operands as shown for BROKEN CONDUCTOR 1
ELEMENT: Compensated overvoltage	COMP OV STG1 PKP COMP OV STG2 PKP COMP OV STG3 PKP COMP OV STG1 DPO COMP OV STG2 DPO COMP OV STG3 DPO COMP OV STG1 OP COMP OV STG2 OP COMP OV STG3 OP COMP OV PKP COMP OV DPO COMP OV OP	Asserted when the compensated overvoltage element picks up in stage 1 Asserted when the compensated overvoltage element picks up in stage 2 Asserted when the compensated overvoltage element picks up in stage 3 Asserted when the compensated overvoltage element drops out in stage 1 Asserted when the compensated overvoltage element drops out in stage 2 Asserted when the compensated overvoltage element drops out in stage 3 Asserted when the compensated overvoltage element operates in stage 1 Asserted when the compensated overvoltage element operates in stage 2 Asserted when the compensated overvoltage element operates in stage 3 Asserted when the compensated overvoltage element picks up Asserted when the compensated overvoltage element drops out Asserted when the compensated overvoltage element operates
ELEMENT: Continuous monitor	CONT MONITOR PKP CONT MONITOR OP	Continuous monitor has picked up Continuous monitor has operated
ELEMENT: CT fail	CT FAIL 1 PKP CT FAIL 1 OP	CT fail has picked up CT fail has dropped out
	CT FAIL 2 to 4 (4 with breaker and half software option)	Same set of operands as per CT FAIL 1
ELEMENT: Digital counters	Counter 1 HI Counter 1 EQL Counter 1 LO	Digital counter 1 output is 'more than' comparison value Digital counter 1 output is 'equal to' comparison value Digital counter 1 output is 'less than' comparison value
	Counter 2 to 8	Same set of operands as shown for Counter 1
ELEMENT: Directional comparison unblocking scheme (DCUB)	DCUB TX1 DCUB TX2 DCUB TX3 DCUB TX4 DCUB TRIP A DCUB TRIP B DCUB TRIP C DCUB TRIP 3P DCUB OP	Directional comparison unblocking scheme asserts transmit bit 1 Directional comparison unblocking scheme asserts transmit bit 2 Directional comparison unblocking scheme asserts transmit bit 3 Directional comparison unblocking scheme asserts transmit bit 4 Directional comparison unblocking scheme has operated to trip phase A Directional comparison unblocking scheme has operated to trip phase B Directional comparison unblocking scheme has operated to trip phase C Directional comparison unblocking scheme has operated to trip all phases Directional comparison unblocking scheme has operated
ELEMENT: Digital elements	Dig Element 1 PKP Dig Element 1 OP Dig Element 1 DPO	Digital Element 1 is picked up Digital Element 1 is operated Digital Element 1 is dropped out
	Dig Element 2 to 48	Same set of operands as shown for Dig Element 1
ELEMENT: Blocking scheme	DIR BLOCK TX INIT DIR BLOCK TX1 STOP DIR BLOCK TX2 STOP DIR BLOCK TX3 STOP DIR BLOCK TX4 STOP DIR BLOCK TRIP A DIR BLOCK TRIP B DIR BLOCK TRIP C DIR BLOCK TRIP 3P DIR BLOCK OP	Directional blocking signal is initiated Directional blocking scheme de-asserts transmit bit no. 1 Directional blocking scheme de-asserts transmit bit no. 2 Directional blocking scheme de-asserts transmit bit no. 3 Directional blocking scheme de-asserts transmit bit no. 4 Directional blocking scheme has operated to trip phase A Directional blocking scheme has operated to trip phase B Directional blocking scheme has operated to trip phase C Directional blocking scheme has tripped all 3 phases Directional blocking scheme has operated
ELEMENT: Blocking 1 scheme	DIR BLOCK1 TX INIT DIR BLOCK1 TX1 STOP DIR BLOCK1 TX2 STOP DIR BLOCK1 TX3 STOP DIR BLOCK1 TX4 STOP DIR BLOCK1 TRIP A DIR BLOCK1 TRIP B DIR BLOCK1 TRIP C DIR BLOCK1 TRIP 3P DIR BLOCK1 OP	Directional blocking1 signal is initiated Directional blocking1 scheme de-asserts transmit bit no. 1 Directional blocking1 scheme de-asserts transmit bit no. 2 Directional blocking1 scheme de-asserts transmit bit no. 3 Directional blocking1 scheme de-asserts transmit bit no. 4 Directional blocking1 scheme has operated to trip phase A Directional blocking1 scheme has operated to trip phase B Directional blocking1 scheme has operated to trip phase C Directional blocking1 scheme has tripped all 3 phases Directional blocking1 scheme has operated

Operand type	Operand syntax	Operand description
ELEMENT: Sensitive directional power	DIR POWER 1 STG1 PKP DIR POWER 1 STG2 PKP DIR POWER 1 STG1 DPO DIR POWER 1 STG2 DPO DIR POWER 1 STG1 OP DIR POWER 1 STG2 OP DIR POWER 1 PKP DIR POWER 1 DPO DIR POWER 1 OP	Stage 1 of the directional power element 1 has picked up Stage 2 of the directional power element 1 has picked up Stage 1 of the directional power element 1 has dropped out Stage 2 of the directional power element 1 has dropped out Stage 1 of the directional power element 1 has operated Stage 2 of the directional power element 1 has operated The directional power element has picked up The directional power element has dropped out The directional power element has operated
	DIR POWER 2	Same set of operands as DIR POWER 1
ELEMENT: DUTT (Direct underreach transfer trip)	DUTT TX1 DUTT TX2 DUTT TX3 DUTT TX4 DUTT TRIP A DUTT TRIP B DUTT TRIP C DUTT TRIP 3P DUTT OP	Direct under-reaching transfer trip asserts transmit bit 1 Direct under-reaching transfer trip asserts transmit bit 2 Direct under-reaching transfer trip asserts transmit bit 3 Direct under-reaching transfer trip asserts transmit bit 4 Direct under-reaching transfer trip has operated to trip phase A Direct under-reaching transfer trip has operated to trip phase B Direct under-reaching transfer trip has operated to trip phase C Direct under-reaching transfer trip has operated to trip all three phases Direct under-reaching transfer trip has operated
ELEMENT: Fault locator	TAP-LOCAL FAULT	Fault is located between local terminal and tap point (3-terminal only)
ELEMENT: Frequency rate of change	FREQ RATE 1 PKP FREQ RATE 1 DPO FREQ RATE 1 OP	The frequency rate of change 1 element has picked up The frequency rate of change 1 element has dropped out The frequency rate of change 1 element has operated
	FREQ RATE 2 to 4	Same set of operands as shown for FREQ RATE 1
ELEMENT: FlexElements	FxE 1 PKP FxE 1 OP FxE 1 DPO	FlexElement 1 has picked up FlexElement 1 has operated FlexElement 1 has dropped out
	FxE 2 to 8	Same set of operands as shown for FxE 1
ELEMENT: Ground distance	GND DIST Z1 PKP GND DIST Z1 OP GND DIST Z1 OP A GND DIST Z1 OP B GND DIST Z1 OP C GND DIST Z1 PKP A GND DIST Z1 PKP B GND DIST Z1 PKP C GND DIST Z1 SUPN IA GND DIST Z1 SUPN IB GND DIST Z1 SUPN IC GND DIST Z1 SUPN IN GND DIST Z1 DPO A GND DIST Z1 DPO B GND DIST Z1 DPO C GND DIST Z1 DIR SUPN	Ground distance zone 1 has picked up Ground distance zone 1 has operated Ground distance zone 1 phase A has operated Ground distance zone 1 phase B has operated Ground distance zone 1 phase C has operated Ground distance zone 1 phase A has picked up Ground distance zone 1 phase B has picked up Ground distance zone 1 phase C has picked up Ground distance zone 1 neutral 1A is supervising Ground distance zone 1 neutral 1B is supervising Ground distance zone 1 neutral 1C is supervising Ground distance zone 1 neutral is supervising Ground distance zone 1 phase A has dropped out Ground distance zone 1 phase B has dropped out Ground distance zone 1 phase C has dropped out Ground distance zone 1 directional is supervising
	GND DIST Z2 to 5	Same set of operands as shown for GND DIST Z1
ELEMENT: Ground instantaneous overcurrent	GROUND IOC1 PKP GROUND IOC1 OP GROUND IOC1 DPO	Ground instantaneous overcurrent 1 has picked up Ground instantaneous overcurrent 1 has operated Ground instantaneous overcurrent 1 has dropped out
	GROUND IOC2 to 8	Same set of operands as shown for GROUND IOC 1
ELEMENT: Ground time overcurrent	GROUND TOC1 PKP GROUND TOC1 OP GROUND TOC1 DPO	Ground time overcurrent 1 has picked up Ground time overcurrent 1 has operated Ground time overcurrent 1 has dropped out
	GROUND TOC2 to 4	Same set of operands as shown for GROUND TOC1

Operand type	Operand syntax	Operand description
ELEMENT: Hybrid POTT (Hybrid permissive overreach transfer trip)	HYBRID POTT TX1 HYBRID POTT TX2 HYBRID POTT TX3 HYBRID POTT TX4 HYBRID POTT TRIP A HYBRID POTT TRIP B HYBRID POTT TRIP C HYBRID POTT TRIP 3P HYBRID POTT OP	Hybrid permissive over-reaching transfer trip asserts transmit bit 1 Hybrid permissive over-reaching transfer trip asserts transmit bit 2 Hybrid permissive over-reaching transfer trip asserts transmit bit 3 Hybrid permissive over-reaching transfer trip asserts transmit bit 4 Hybrid permissive over-reaching transfer trip has operated to trip phase A Hybrid permissive over-reaching transfer trip has operated to trip phase B Hybrid permissive over-reaching transfer trip has operated to trip phase C Hybrid permissive over-reaching transfer trip has tripped all three phases Hybrid permissive over-reaching transfer trip has operated
ELEMENT: Non-volatile latches	LATCH 1 ON LATCH 1 OFF	Non-volatile latch 1 is ON (Logic = 1) Non-volatile latch 1 is OFF (Logic = 0)
	LATCH 2 to 16	Same set of operands as shown for LATCH 1
ELEMENT: Line pickup	LINE PICKUP OP LINE PICKUP PKP LINE PICKUP DPO LINE PICKUP I<A LINE PICKUP I<B LINE PICKUP I<C LINE PICKUP UV PKP LINE PICKUP LEO PKP LINE PICKUP RCL TRIP	Line pickup has operated Line pickup has picked up Line pickup has dropped out Line pickup detected phase A current below 5% of nominal Line pickup detected phase B current below 5% of nominal Line pickup detected phase C current below 5% of nominal Line pickup undervoltage has picked up Line pickup line end open has picked up Line pickup operated from overreaching zone 2 when reclosing the line (zone 1 extension functionality)
ELEMENT: Load encroachment	LOAD ENCHR PKP LOAD ENCHR OP LOAD ENCHR DPO	Load encroachment has picked up Load encroachment has operated Load encroachment has dropped out
ELEMENT: Negative-sequence directional overcurrent	NEG SEQ DIR OC1 FWD NEG SEQ DIR OC1 REV NEG SEQ DIR OC2 FWD NEG SEQ DIR OC2 REV	Negative-sequence directional overcurrent 1 forward has operated Negative-sequence directional overcurrent 1 reverse has operated Negative-sequence directional overcurrent 2 forward has operated Negative-sequence directional overcurrent 2 reverse has operated
ELEMENT: Negative-sequence instantaneous overcurrent	NEG SEQ IOC1 PKP NEG SEQ IOC1 OP NEG SEQ IOC1 DPO	Negative-sequence instantaneous overcurrent 1 has picked up Negative-sequence instantaneous overcurrent 1 has operated Negative-sequence instantaneous overcurrent 1 has dropped out
	NEG SEQ IOC2	Same set of operands as shown for NEG SEQ IOC1
ELEMENT: Negative-sequence time overcurrent	NEG SEQ TOC1 PKP NEG SEQ TOC1 OP NEG SEQ TOC1 DPO	Negative-sequence time overcurrent 1 has picked up Negative-sequence time overcurrent 1 has operated Negative-sequence time overcurrent 1 has dropped out
	NEG SEQ TOC2	Same set of operands as shown for NEG SEQ TOC1
ELEMENT: Neutral instantaneous overcurrent	NEUTRAL IOC1 PKP NEUTRAL IOC1 OP NEUTRAL IOC1 DPO	Neutral instantaneous overcurrent 1 has picked up Neutral instantaneous overcurrent 1 has operated Neutral instantaneous overcurrent 1 has dropped out
	NEUTRAL IOC2 to 8	Same set of operands as shown for NEUTRAL IOC1
ELEMENT: Neutral overvoltage	NEUTRAL OV1 PKP NEUTRAL OV1 DPO NEUTRAL OV1 OP	Neutral overvoltage element 1 has picked up Neutral overvoltage element 1 has dropped out Neutral overvoltage element 1 has operated
	NEUTRAL OV2 to 3	Same set of operands as shown for NEUTRAL OV1
ELEMENT: Neutral time overcurrent	NEUTRAL TOC1 PKP NEUTRAL TOC1 OP NEUTRAL TOC1 DPO	Neutral time overcurrent 1 has picked up Neutral time overcurrent 1 has operated Neutral time overcurrent 1 has dropped out
	NEUTRAL TOC2 to 6	Same set of operands as shown for NEUTRAL TOC1
ELEMENT: Neutral directional overcurrent	NTRL DIR OC1 FWD NTRL DIR OC1 REV	Neutral directional overcurrent 1 forward has operated Neutral directional overcurrent 1 reverse has operated
	NTRL DIR OC2	Same set of operands as shown for NTRL DIR OC1

Operand type	Operand syntax	Operand description
ELEMENT: Open pole detector	OPEN POLE OP ϕA OPEN POLE OP ϕB OPEN POLE OP ϕC OPEN POLE BKR ϕA OP OPEN POLE BKR ϕB OP OPEN POLE BKR ϕC OP OPEN POLE BLK N OPEN POLE BLK AB OPEN POLE BLK BC OPEN POLE BLK CA OPEN POLE REM OP ϕA OPEN POLE REM OP ϕB OPEN POLE REM OP ϕC OPEN POLE OP OPEN POLE I< ϕA OPEN POLE I< ϕB OPEN POLE I< ϕC	Open pole condition is detected in phase A Open pole condition is detected in phase B Open pole condition is detected in phase C Based on the breaker(s) auxiliary contacts, an open pole condition is detected on phase A Based on the breaker(s) auxiliary contacts, an open pole condition is detected on phase B Based on the breaker(s) auxiliary contacts, an open pole condition is detected on phase C Blocking signal for neutral, ground, and negative-sequence overcurrent element is established Blocking signal for the AB phase distance elements is established Blocking signal for the BC phase distance elements is established Blocking signal for the CA phase distance elements is established Remote open pole condition detected in phase A Remote open pole condition detected in phase B Remote open pole condition detected in phase C Open pole detector is operated Open pole undercurrent condition is detected in phase A Open pole undercurrent condition is detected in phase B Open pole undercurrent condition is detected in phase C
ELEMENT: Overfrequency	OVERFREQ 1 PKP OVERFREQ 1 OP OVERFREQ 1 DPO	Overfrequency 1 has picked up Overfrequency 1 has operated Overfrequency 1 has dropped out
	OVERFREQ 2 to 4	Same set of operands as shown for OVERFREQ 1
ELEMENT: Synchrophasor phasor data concentrator	PDC NETWORK CNTRL 1 PDC NETWORK CNTRL 2 ↓ PDC NETWORK CNTRL 16	Phasor data concentrator asserts control bit 1 as received via the network Phasor data concentrator asserts control bit 2 as received via the network ↓ Phasor data concentrator asserts control bit 16 as received via the network
ELEMENT: Phase directional overcurrent	PH DIR1 BLK A PH DIR1 BLK B PH DIR1 BLK C PH DIR1 BLK	Phase A directional 1 block Phase B directional 1 block Phase C directional 1 block Phase directional 1 block
	PH DIR2	Same set of operands as shown for PH DIR1
ELEMENT: Phase distance	PH DIST Z1 PKP PH DIST Z1 OP PH DIST Z1 OP AB PH DIST Z1 OP BC PH DIST Z1 OP CA PH DIST Z1 PKP AB PH DIST Z1 PKP BC PH DIST Z1 PKP CA PH DIST Z1 SUPN IAB PH DIST Z1 SUPN IBC PH DIST Z1 SUPN ICA PH DIST Z1 DPO AB PH DIST Z1 DPO BC PH DIST Z1 DPO CA	Phase distance zone 1 has picked up Phase distance zone 1 has operated Phase distance zone 1 phase AB has operated Phase distance zone 1 phase BC has operated Phase distance zone 1 phase CA has operated Phase distance zone 1 phase AB has picked up Phase distance zone 1 phase BC has picked up Phase distance zone 1 phase CA has picked up Phase distance zone 1 phase AB IOC is supervising Phase distance zone 1 phase BC IOC is supervising Phase distance zone 1 phase CA IOC is supervising Phase distance zone 1 phase AB has dropped out Phase distance zone 1 phase BC has dropped out Phase distance zone 1 phase CA has dropped out
	PH DIST Z2 to 5	Same set of operands as shown for PH DIST Z1
ELEMENT: Phase instantaneous overcurrent	PHASE IOC1 PKP PHASE IOC1 OP PHASE IOC1 DPO PHASE IOC1 PKP A PHASE IOC1 PKP B PHASE IOC1 PKP C PHASE IOC1 OP A PHASE IOC1 OP B PHASE IOC1 OP C PHASE IOC1 DPO A PHASE IOC1 DPO B PHASE IOC1 DPO C	At least one phase of phase instantaneous overcurrent 1 has picked up At least one phase of phase instantaneous overcurrent 1 has operated All phases of phase instantaneous overcurrent 1 have dropped out Phase A of phase instantaneous overcurrent 1 has picked up Phase B of phase instantaneous overcurrent 1 has picked up Phase C of phase instantaneous overcurrent 1 has picked up Phase A of phase instantaneous overcurrent 1 has operated Phase B of phase instantaneous overcurrent 1 has operated Phase C of phase instantaneous overcurrent 1 has operated Phase A of phase instantaneous overcurrent 1 has dropped out Phase B of phase instantaneous overcurrent 1 has dropped out Phase C of phase instantaneous overcurrent 1 has dropped out
	PHASE IOC2 to 8	Same set of operands as shown for PHASE IOC1

Operand type	Operand syntax	Operand description
ELEMENT: Phase overvoltage	PHASE OV1 PKP PHASE OV1 OP PHASE OV1 DPO PHASE OV1 PKP A PHASE OV1 PKP B PHASE OV1 PKP C PHASE OV1 OP A PHASE OV1 OP B PHASE OV1 OP C PHASE OV1 DPO A PHASE OV1 DPO B PHASE OV1 DPO C	At least one phase of overvoltage 1 has picked up At least one phase of overvoltage 1 has operated All phases of overvoltage 1 have dropped out Phase A of overvoltage 1 has picked up Phase B of overvoltage 1 has picked up Phase C of overvoltage 1 has picked up Phase A of overvoltage 1 has operated Phase B of overvoltage 1 has operated Phase C of overvoltage 1 has operated Phase A of overvoltage 1 has dropped out Phase B of overvoltage 1 has dropped out Phase C of overvoltage 1 has dropped out
	PHASE OV2 to 3	Same set of operands as shown for PHASE OV1
ELEMENT: Phase select	PHASE SELECT AG PHASE SELECT BG PHASE SELECT CG PHASE SELECT AB PHASE SELECT BC PHASE SELECT CA PHASE SELECT ABG PHASE SELECT BCG PHASE SELECT CAG PHASE SELECT 3P PHASE SELECT SLG PHASE SELECT MULTI-P PHASE SELECT VOID	Phase A to ground fault is detected Phase B to ground fault is detected Phase C to ground fault is detected Phase A to B fault is detected Phase B to C fault is detected Phase C to A fault is detected Phase A to B to ground fault is detected Phase B to C to ground fault is detected Phase C to A to ground fault is detected Three-phase symmetrical fault is detected Single line to ground fault is detected Multi-phase fault is detected Fault type cannot be detected
ELEMENT: Phase time overcurrent	PHASE TOC1 PKP PHASE TOC1 OP PHASE TOC1 DPO PHASE TOC1 PKP A PHASE TOC1 PKP B PHASE TOC1 PKP C PHASE TOC1 OP A PHASE TOC1 OP B PHASE TOC1 OP C PHASE TOC1 DPO A PHASE TOC1 DPO B PHASE TOC1 DPO C	At least one phase of phase time overcurrent 1 has picked up At least one phase of phase time overcurrent 1 has operated All phases of phase time overcurrent 1 have dropped out Phase A of phase time overcurrent 1 has picked up Phase B of phase time overcurrent 1 has picked up Phase C of phase time overcurrent 1 has picked up Phase A of phase time overcurrent 1 has operated Phase B of phase time overcurrent 1 has operated Phase C of phase time overcurrent 1 has operated Phase A of phase time overcurrent 1 has dropped out Phase B of phase time overcurrent 1 has dropped out Phase C of phase time overcurrent 1 has dropped out
	PHASE TOC2 to 6	Same set of operands as shown for PHASE TOC1
ELEMENT: Phase undervoltage	PHASE UV1 PKP PHASE UV1 OP PHASE UV1 DPO PHASE UV1 PKP A PHASE UV1 PKP B PHASE UV1 PKP C PHASE UV1 OP A PHASE UV1 OP B PHASE UV1 OP C PHASE UV1 DPO A PHASE UV1 DPO B PHASE UV1 DPO C	At least one phase of phase undervoltage 1 has picked up At least one phase of phase undervoltage 1 has operated All phases of phase undervoltage 1 have dropped out Phase A of phase undervoltage 1 has picked up Phase B of phase undervoltage 1 has picked up Phase C of phase undervoltage 1 has picked up Phase A of phase undervoltage 1 has operated Phase B of phase undervoltage 1 has operated Phase C of phase undervoltage 1 has operated Phase A of phase undervoltage 1 has dropped out Phase B of phase undervoltage 1 has dropped out Phase C of phase undervoltage 1 has dropped out
	PHASE UV2 to 3	Same set of operands as shown for PHASE UV1
ELEMENT: Synchrophasor Phasor Measurement Unit (PMU)	PMU Agg 1 SvEng On PMU 1 CURR TRIGGER PMU 1 FREQ TRIGGER PMU 1 POWER TRIGGER PMU 1 ROCOF TRIGGER PMU 1 VOLT TRIGGER PMU 1 TRIGGERED	SvEng data item in associated control block is on Overcurrent trigger of phasor measurement unit 1 has operated Abnormal frequency trigger of phasor measurement unit 1 has operated Overpower trigger of phasor measurement unit 1 has operated Rate of change of frequency trigger of phasor measurement unit 1 has operated Abnormal voltage trigger of phasor measurement unit 1 has operated Phasor measurement unit 1 triggered; no events or targets are generated by this operand

Operand type	Operand syntax	Operand description
ELEMENT: Synchrophasor one-shot	PMU ONE-SHOT EXPIRED	Indicates the one-shot operation has been executed, and the present time is at least 30 seconds past the scheduled one-shot time
	PMU ONE-SHOT OP	Indicates the one-shot operation and remains asserted for 30 seconds afterwards
	PMU ONE-SHOT PENDING	Indicates the one-shot operation is pending; that is, the present time is before the scheduled one-shot time
ELEMENT: POTT (Permissive overreach transfer trip)	POTT OP	Permissive over-reaching transfer trip has operated
	POTT TX	Permissive over-reaching transfer trip signal sent
	POTT TX1	Permissive over-reaching transfer trip asserts transmit bit number 1
	POTT TX2	Permissive over-reaching transfer trip asserts transmit bit number 2
	POTT TX3	Permissive over-reaching transfer trip asserts transmit bit number 3
	POTT TX4	Permissive over-reaching transfer trip asserts transmit bit number 4
	POTT TRIP A	Permissive over-reaching transfer trip has operated to trip phase A
	POTT TRIP B	Permissive over-reaching transfer trip has operated to trip phase B
	POTT TRIP C	Permissive over-reaching transfer trip has operated to trip phase C
	POTT TRIP 3P	Permissive over-reaching transfer trip has operated to trip all three phases
ELEMENT: POTT1 (Permissive overreach transfer trip ground)	POTT1 OP	Permissive over-reaching transfer trip ground has operated
	POTT1 TX1	Permissive over-reaching transfer trip ground asserts transmit bit number 1
	POTT1 TX2	Permissive over-reaching transfer trip ground asserts transmit bit number 2
	POTT1 TX3	Permissive over-reaching transfer trip ground asserts transmit bit number 3
	POTT1 TX4	Permissive over-reaching transfer trip ground asserts transmit bit number 4
	POTT1 TRIP A	Permissive over-reaching transfer trip ground has operated to trip phase A
	POTT1 TRIP B	Permissive over-reaching transfer trip ground has operated to trip phase B
	POTT1 TRIP C	Permissive over-reaching transfer trip ground has operated to trip phase C
	POTT1 TRIP 3P	Permissive over-reaching transfer trip ground has operated to trip all three phases
ELEMENT: Power swing detect	POWER SWING OUTER	Positive-sequence impedance in outer characteristic
	POWER SWING MIDDLE	Positive-sequence impedance in middle characteristic
	POWER SWING INNER	Positive-sequence impedance in inner characteristic
	POWER SWING BLOCK	Power swing blocking element operated
	POWER SWING TMR2 PKP	Power swing timer 2 picked up
	POWER SWING TMR3 PKP	Power swing timer 3 picked up
	POWER SWING TMR4 PKP	Power swing timer 4 picked up
	POWER SWING TRIP	Out-of-step tripping operated
	POWER SWING 50DD	The power swing element detected a disturbance other than power swing
	POWER SWING INCOMING	An unstable power swing has been detected (incoming locus)
	POWER SWING OUTGOING	An unstable power swing has been detected (outgoing locus)
	POWER SWING UN/BLOCK	Asserted when power swing is detected and de-asserted when a fault during power swing occurs
ELEMENT: PUTT (Permissive underreach transfer trip)	PUTT OP	Permissive under-reaching transfer trip has operated
	PUTT TX1	Permissive under-reaching transfer trip asserts transmit bit number 1
	PUTT TX2	Permissive under-reaching transfer trip asserts transmit bit number 2
	PUTT TX3	Permissive under-reaching transfer trip asserts transmit bit number 3
	PUTT TX4	Permissive under-reaching transfer trip asserts transmit bit number 4
	PUTT TRIP A	Permissive under-reaching transfer trip has operated to trip phase A
	PUTT TRIP B	Permissive under-reaching transfer trip has operated to trip phase B
	PUTT TRIP C	Permissive under-reaching transfer trip has operated to trip phase C
	PUTT TRIP 3P	Permissive under-reaching transfer trip has operated to trip all three phases
ELEMENT: Restricted ground fault	RESTD GND FT1 PKP	Restricted ground fault 1 has picked up
	RESTD GND FT1 OP	Restricted ground fault 1 has operated
	RESTD GND FT1 DPO	Restricted ground fault 1 has dropped out
	RESTD GND FT2 to 4	Same set of operands as shown for RESTD GND FT1
ELEMENT: Selector switch	SELECTOR 1 POS Y	Selector switch 1 is in Position Y (mutually exclusive operands)
	SELECTOR 1 BIT 0	First bit of the 3-bit word encoding position of selector 1
	SELECTOR 1 BIT 1	Second bit of the 3-bit word encoding position of selector 1
	SELECTOR 1 BIT 2	Third bit of the 3-bit word encoding position of selector 1
	SELECTOR 1 STP ALARM	Position of selector 1 has been pre-selected with the stepping up control input but not acknowledged
	SELECTOR 1 BIT ALARM	Position of selector 1 has been pre-selected with the 3-bit control input but not acknowledged
	SELECTOR 1 ALARM	Position of selector 1 has been pre-selected but not acknowledged
	SELECTOR 1 PWR ALARM	Position of selector switch 1 is undetermined or restored from memory when the relay powers up and synchronizes to the three-bit input
	SELECTOR 2	Same set of operands as shown for SELECTOR 1

Operand type	Operand syntax	Operand description
ELEMENT: Setting group	SETTING GROUP ACT 1 SETTING GROUP ACT 2 SETTING GROUP ACT 3 SETTING GROUP ACT 4 SETTING GROUP ACT 5 SETTING GROUP ACT 6	Setting group 1 is active Setting group 2 is active Setting group 3 is active Setting group 4 is active Setting group 5 is active Setting group 6 is active
ELEMENT: Disturbance detector	SRC1 50DD OP SRC2 50DD OP SRC3 50DD OP SRC4 50DD OP	Source 1 disturbance detector has operated Source 2 disturbance detector has operated Source 3 disturbance detector has operated Source 4 disturbance detector has operated
ELEMENT: VTFF (Voltage transformer fuse failure)	SRC1 VT FF OP SRC1 VT FF DPO SRC1 VT FF VOL LOSS SRC1 VT FF ALARM	Source 1 VT fuse failure detector has operated Source 1 VT fuse failure detector has dropped out Source 1 has lost voltage signals (V2 below 10% and V1 below 5% of nominal) Source 1 has triggered a VT fuse failure alarm
	SRC1 VT NEU WIRE OPEN	Source 1 VT neutral wire open detected. When the VT is connected in Delta, do not enable this function because there is no neutral wire for Delta connected VT.
	SRC2 VT FUSE FAIL to SRC4	Same set of operands as shown for SRC1 VT FF
ELEMENT: Stub bus	STUB BUS OP	Stub bus is operated
ELEMENT: Disconnect switch	SWITCH 1 OFF CMD SWITCH 1 ON CMD SWITCH 1 CLOSED SWITCH 1 OPEN SWITCH 1 DISCREP SWITCH 1 TROUBLE SWITCH 1 ΦA CLSD SWITCH 1 ΦA OPEN SWITCH 1 ΦA BAD ST SWITCH 1 ΦA INTERM SWITCH 1 ΦB CLSD SWITCH 1 ΦB OPEN SWITCH 1 ΦB BAD ST SWITCH 1 ΦB INTERM SWITCH 1 ΦC CLSD SWITCH 1 ΦC OPEN SWITCH 1 ΦC BAD ST SWITCH 1 ΦC INTERM SWITCH 1 BAD STATUS SWITCH 1 TAG ON SWITCH 1 TAG OFF SWITCH 1 SUBD CLSD SWITCH 1 SUBD OPEN SWITCH 1 BYPASS ON SWITCH 1 BYPASS OFF	Disconnect switch 1 open command initiated Disconnect switch 1 close command initiated Disconnect switch 1 is closed Disconnect switch 1 is open Disconnect switch 1 has discrepancy Disconnect switch 1 trouble alarm Disconnect switch 1 phase A is closed Disconnect switch 1 phase A is open Disconnect switch 1 phase A bad status is detected (discrepancy between the 89/a and 89/b contacts) Disconnect switch 1 phase A intermediate status is detected (transition from one position to another) Disconnect switch 1 phase B is closed Disconnect switch 1 phase B is open Disconnect switch 1 phase B bad status is detected (discrepancy between the 89/a and 89/b contacts) Disconnect switch 1 phase B intermediate status is detected (transition from one position to another) Disconnect switch 1 phase C is closed Disconnect switch 1 phase C is open Disconnect switch 1 phase C bad status is detected (discrepancy between the 89/a and 89/b contacts) Disconnect switch 1 phase C intermediate status is detected (transition from one position to another) Disconnect switch 1 bad status is detected on any pole Switch 1 tagged so manual trip and close is blocked Switch 1 not tagged Switch 1 status manually substituted to closed Switch 1 status manually substituted to open Switch 1 control interlocking is bypassed manually Switch 1 control interlocking is not bypassed manually
	SWITCH 2 to 24	Same set of operands as shown for SWITCH 1
ELEMENT: Synchrocheck	SYNC1 DEAD S OP SYNC1 DEAD S DPO SYNC1 SYNC OP SYNC1 SYNC DPO SYNC1 CLS OP SYNC1 CLS DPO SYNC1 V1 ABOVE MIN SYNC1 V1 BELOW MAX SYNC1 V2 ABOVE MIN SYNC1 V2 BELOW MAX SYNC1 S-CLOSE OP SYNC1 S-CLOSE OP DPO SYNC1 S-CLOSE ARMD	Synchrocheck 1 dead source has operated Synchrocheck 1 dead source has dropped out Synchrocheck 1 in synchronization has operated Synchrocheck 1 in synchronization has dropped out Synchrocheck 1 close has operated Synchrocheck 1 close has dropped out Synchrocheck 1 V1 is above the minimum live voltage Synchrocheck 1 V1 is below the maximum dead voltage Synchrocheck 1 V2 is above the minimum live voltage Synchrocheck 1 V2 is below the maximum dead voltage Synchrocheck 1 S-CLOSE has operated Synchrocheck 1 S-CLOSE has dropped out Synchrocheck 1 S-CLOSE has been armed

Operand type	Operand syntax	Operand description
	SYNC 2 to 10	Same set of operands as shown for SYNC 1
ELEMENT: Thermal overload protection	THERMAL PROT 1 PKP THERMAL PROT 1 OP	Thermal overload protection 1 picked up Thermal overload protection 1 operated
	THERMAL PROT 2	Same set of operands as shown for THERMAL PROT 1
ELEMENT: Trip output	TRIP 3-POLE TRIP 1-POLE TRIP PHASE A TRIP PHASE B TRIP PHASE C TRIP AR INIT 3-POLE TRIP FORCE 3-POLE TRIP OUTPUT OP TRIP Z2PH TMR INIT TRIP Z2GR TMR INIT	Trip all three breaker poles A single-pole trip-and-reclose operation is initiated Trip breaker pole A, initiate phase A breaker fail and reclose Trip breaker pole B, initiate phase B breaker fail and reclose Trip breaker pole C, initiate phase C breaker fail and reclose Initiate a three-pole reclose Three-pole trip must be initiated Any trip is initiated by the trip output Phase distance zone 2 timer is initiated by the trip output Ground distance zone 2 timer is initiated by the trip output
ELEMENT: Trip bus	TRIP BUS 1 PKP TRIP BUS 1 OP	Asserted when the trip bus 1 element picks up Asserted when the trip bus 1 element operates
	TRIP BUS 2 to 6	Same set of operands as shown for TRIP BUS 1
ELEMENT: Underfrequency	UNDERFREQ 1 PKP UNDERFREQ 1 OP UNDERFREQ 1 DPO	Underfrequency 1 has picked up Underfrequency 1 has operated Underfrequency 1 has dropped out
	UNDERFREQ 2 to 6	Same set of operands as shown for UNDERFREQ 1
ELEMENT: Volts per hertz	VOLT PER HERTZ 1 PKP VOLT PER HERTZ 1 OP VOLT PER HERTZ 1 DPO	The volts per hertz element 1 has picked up The volts per hertz element 1 has operated The volts per hertz element 1 has dropped out
	VOLT PER HERTZ 2	Same set of operands as VOLT PER HERTZ 1
ELEMENT: Wattmetric zero-sequence directional	WATTMETRIC 1 PKP WATTMETRIC 1 OP	Wattmetric directional element 1 has picked up Wattmetric directional element 1 has operated
	WATTMETRIC 2	Same set of operands as per WATTMETRIC 1
FIXED OPERANDS	Off	Logic = 0. Does nothing and can be used as a delimiter in an equation list; used as 'Disable' by other features.
	On	Logic = 1. Can be used as a test setting.
INPUTS/OUTPUTS: Contact inputs	Cont Ip 1 On Cont Ip 2 On ↓ Cont Ip 1 Off Cont Ip 2 Off ↓ Cont Ip 120 On Cont Ip 120 Off	(does not appear unless ordered) (does not appear unless ordered) ↓ (does not appear unless ordered) (does not appear unless ordered) ↓ (does not appear unless ordered) (does not appear unless ordered)
INPUTS/OUTPUTS: Contact outputs, current (from detector on form-A output only)	Cont Op 1 IOn Cont Op 2 IOn ↓ Cont Op 72 IOn	(does not appear unless ordered) (does not appear unless ordered) ↓ (does not appear unless ordered)
INPUTS/OUTPUTS: Contact outputs, voltage (from detector on form-A output only)	Cont Op 1 VOn Cont Op 2 VOn ↓ Cont Op 72 VOn	(does not appear unless ordered) (does not appear unless ordered) ↓ (does not appear unless ordered)
	Cont Op 1 VOff Cont Op 2 VOff ↓ Cont Op 72 VOff	(does not appear unless ordered) (does not appear unless ordered) ↓ (does not appear unless ordered)
INPUTS/OUTPUTS: Direct input	Direct I/P 1-1 On ↓ Direct I/P 1-8 On	(appears only when an inter-relay communications card is used) ↓ (appears only when inter-relay communications card is used)
	Direct I/P 2-1 On ↓ Direct I/P 2-8 On	(appears only when inter-relay communications card is used) ↓ (appears only when inter-relay communications card is used)

Operand type	Operand syntax	Operand description
INPUTS/OUTPUTS: RxGOOSE DPS	RxG DPS 1 BAD RxG DPS 1 INTERM RxG DPS 1 OFF RxG DPS 1 ON	Asserted while the RxGOOSE double-point status input is in the bad state Asserted while the RxGOOSE double-point status input is in the intermediate state Asserted while the RxGOOSE double-point status input is off Asserted while the RxGOOSE double-point status input is on
	RxG DPS 2 to 5	Same set of operands as per RxG DPS 1
INPUTS/OUTPUTS: RxGOOSE Booleans	RxG Bool 1 On RxG Bool 2 On RxG Bool 3 On ↓ RxG Bool 256 On	Flag is set, logic=1 Flag is set, logic=1 Flag is set, logic=1 ↓ Flag is set, logic=1
INPUTS/OUTPUTS: Virtual inputs	Virt Ip 1 On Virt Ip 2 On Virt Ip 3 On ↓ Virt Ip 64 On	Flag is set, logic=1 Flag is set, logic=1 Flag is set, logic=1 ↓ Flag is set, logic=1
INPUTS/OUTPUTS: Virtual outputs	Virt Op 1 On Virt Op 2 On Virt Op 3 On ↓ Virt Op 96 On	Flag is set, logic=1 Flag is set, logic=1 Flag is set, logic=1 ↓ Flag is set, logic=1
LED INDICATORS: Enhanced and basic front panels	LED IN SERVICE LED TROUBLE LED TEST MODE LED TRIP LED ALARM LED PICKUP LED VOLTAGE LED CURRENT LED FREQUENCY LED OTHER LED PHASE A LED PHASE B LED PHASE C LED NEUTRAL/GROUND	Asserted when the front panel IN SERVICE LED is on Asserted when the front panel TROUBLE LED is on Asserted when the front panel TEST MODE LED is on Asserted when the front panel TRIP LED is on Asserted when the front panel ALARM LED is on Asserted when an element picks up and to turn PICKUP LED on Asserted when a voltage element involved and to turn VOLTAGE LED on Asserted when a current element involved and to turn CURRENT LED on Asserted when a frequency element involved and to turn FREQUENCY LED on Asserted when a composite element involved and to turn OTHER LED on Asserted when phase A involved and to turn PHASE A LED on Asserted when phase B involved and to turn PHASE B LED on Asserted when phase C involved and to turn PHASE C LED on Asserted when a neutral or ground element involved and to turn NEUTRAL/ GROUND LED on
LED INDICATORS: Graphical front panel	LED IN SERVICE LED TROUBLE LED TEST MODE LED TRIP LED ALARM LED PICKUP LED VOLTAGE LED CURRENT LED FREQUENCY LED OTHER LED PHASE A LED PHASE B LED PHASE C LED NEUTRAL/GROUND	Asserted when the front panel IN SERVICE LED is on Asserted when the front panel TROUBLE LED is on Asserted when the front panel TEST MODE LED is on Asserted when the front panel TRIP LED is on Asserted when the front panel ALARM LED is on Asserted when an element picks up and to turn Event Cause LED 1 on by default Asserted when a voltage element involved and to turn Event Cause LED 2 on by default Asserted when a current element involved and to turn Event Cause LED 3 on by default Asserted when a frequency element involved and to turn Event Cause LED 4 on by default Asserted when a composite element involved and to turn Event Cause LED 5 on by default Asserted when phase A involved and to turn Event Cause LED 6 on by default Asserted when phase B involved and to turn Event Cause LED 7 on by default Asserted when phase C involved and to turn Event Cause LED 8 on by default Asserted when a neutral or ground element involved and to turn Event Cause LED 9 on by default
LED INDICATORS: LED test	LED TEST IN PROGRESS	An LED test has been initiated and has not finished
LED INDICATORS: User-programmable LEDs Enhanced and basic front panels	LED USER 1	Asserted when user-programmable LED 1 is on
	LED USER 2 to 48	The operand above is available for user-programmable LEDs 2 through 48

Operand type	Operand syntax	Operand description
LED INDICATORS: User-programmable LEDs Graphical front panel	EVENT CAUSE LED 1	Asserted when event cause LED 1 is on
	EVENT CAUSE LED 2 to 9	Same operand as EVENT CAUSE LED 1
PASSWORD SECURITY	ACCESS LOC SETG OFF ACCESS LOC SETG ON ACCESS LOC CMND OFF ACCESS LOC CMND ON ACCESS REM SETG OFF ACCESS REM SETG ON ACCESS REM CMND OFF ACCESS REM CMND ON UNAUTHORIZED ACCESS	Asserted when local setting access is disabled Asserted when local setting access is enabled Asserted when local command access is disabled Asserted when local command access is enabled Asserted when remote setting access is disabled Asserted when remote setting access is enabled Asserted when remote command access is disabled Asserted when remote command access is enabled Asserted when a password entry fails while accessing a password protected level of the L90
RxGOOSE	RxGOOSE 1 On ↓ RxGOOSE 64 On	Flag is set, logic=1 ↓ Flag is set, logic=1
	RxGOOSE 1 Off ↓ RxGOOSE 64 Off	Flag is set, logic=1 ↓ Flag is set, logic=1
	R-RxGOOSE1 IGMP On R-TxGOOSE1 ARP On <RxGOOSE Boolean1 ID> On <RxGOOSE DPS1 ID> Bad <RxGOOSE DPS1 ID> Interm <RxGOOSE DPS1 ID> Off <RxGOOSE DPS1 ID> On	Indicates status of IGMP connection for R-GOOSE multicast reception Indicates status of ARP connection for R GOOSE unicast transmission Replace bracketed text with RxGOOSE Boolean1 status of "true" Replace bracketed text with RxGOOSE DPS1 status of "bad-state" Replace bracketed text with RxGOOSE DPS1 status is "intermediate-state" Replace bracketed text with RxGOOSE DPS1 status is "off" Replace bracketed text with RxGOOSE DPS1 status is "on"
RESETTING	RESET OP RESET OP (COMMS) RESET OP (OPERAND) RESET OP (PUSHBUTTON) RESET ANCTR OP RESET ANCTR OP(OPRD) RESET ANCTR OP(MNUL)	Reset command is operated (set by all three operands below) Communications source of the reset command Operand (assigned in the **INPUTS/OUTPUTS ⇨⇩ RESETTING** menu) source of the reset command Reset key (pushbutton) source of the reset command Reset annunciator command is operated (set by any operands below) Reset operand (assigned in **INPUTS/OUTPUTS ⇨⇩ RESETTING ANNUNCIATOR** menu) source of the reset annunciator command Reset manual (pushbutton or EnerVista software) source of the reset annunciator command
SELF-DIAGNOSTICS (See Relay Self-tests descriptions in Chapter 7: Commands and Targets)	ANY MAJOR ERROR ANY MINOR ERROR ANY SELF-TESTS BATTERY FAIL CLOCK UNSYNCHRONIZED DIRECT DEVICE OFF DIRECT RING BREAK EQUIPMENT MISMATCH FLEXLOGIC ERR TOKEN IRIG-B FAILURE LATCHING OUT ERROR MAINTENANCE ALERT FIRST ETHERNET FAIL PROCESS BUS FAILURE PTP FAILURE RxGOOSE OFF RRTD COMM FAIL SECOND ETHERNET FAIL THIRD ETHERNET FAIL SNTP FAILURE SYSTEM EXCEPTION TEMP MONITOR UNIT NOT PROGRAMMED SETTING CHANGED	Any of the major self-test errors generated (major error) Any of the minor self-test errors generated (minor error) Any self-test errors generated (generic, any error) The battery is weak or not functioning. Replace as outlined in the Maintenance chapter. Relay is not synchronized to the international time standard A direct device is configured but not connected The Direct I/O settings is for a connection that is not in a ring The configuration of modules does not match the stored order code A FlexLogic equation is incorrect "Bad IRIG-B Signal" self-test. See Chapter 7: Commands and Targets. A difference is detected between the desired and actual latch contact state A subset of the minor self-test errors generated, see Chapter 7 Link failure detected. See description in Chapter 7: Commands and Targets. See description in Chapter 7: Commands and Targets "Bad PTP Signal" self-test as described in Chapter 7 One or more GOOSE messages are not being received See description in Chapter 7: Commands and Targets See description in Chapter 7: Commands and Targets See description in Chapter 7: Commands and Targets SNTP server is not responding See description in Chapter 7: Commands and Targets Monitors ambient temperature and maximum operating temperature The product **SETUP > INSTALLATION > RELAYS SETTINGS** setting is not programmed Any device settings changed over any available interface; operand is asserted for at least one second and then self-reset
TEMPERATURE MONITOR	TEMP MONITOR	Asserted while the ambient temperature is greater than the maximum operating temperature (80°C)

Operand type	Operand syntax	Operand description
USER-PROGRAMMABLE PUSHBUTTONS	PUSHBUTTON 1 ON PUSHBUTTON 1 OFF ANY PB ON	Pushbutton number 1 is in the "On" position Pushbutton number 1 is in the "Off" position Any of 12 pushbuttons is in the "On" position
	PUSHBUTTON 2 to 6, 12, or 16 depending on front panel	Same set of operands as PUSHBUTTON 1

Some operands can be re-named. These are the names of the breakers in the breaker control feature, the ID (identification) of contact inputs and outputs, the ID of virtual inputs, and the ID of virtual outputs. If the user changes the default name or ID of any of these operands, the assigned name appears in the relay list of operands. The default names are shown in the FlexLogic operands table.

The characteristics of the logic gates are tabulated in the following table, and the operators available in FlexLogic are listed in the FlexLogic operators table.

Table 5-26: FlexLogic gate characteristics

Gates	Number of inputs	Output is '1' (= ON) if...
NOT	1	input is '0'
OR	2 to 16	any input is '1'
AND	2 to 16	all inputs are '1'
NOR	2 to 16	all inputs are '0'
NAND	2 to 16	any input is '0'
XOR	2	only one input is '1'

Table 5-27: FlexLogic operators

Type	Syntax	Description	Notes
Editor	INSERT	Insert a parameter in an equation list	
	DELETE	Delete a parameter from an equation list	
End	END	The first END encountered signifies the last entry in the list of processed FlexLogic parameters	
One-shot	POSITIVE ONE SHOT	One shot that responds to a positive going edge	A 'one shot' refers to a single input gate that generates a pulse in response to an edge on the input. The output from a 'one shot' is True (positive) for only one pass through the FlexLogic equation. There is a maximum of 64 'one shots.'
	NEGATIVE ONE SHOT	One shot that responds to a negative going edge	
	DUAL ONE SHOT	One shot that responds to both the positive and negative going edges	
Logic gate	NOT	Logical NOT	Operates on the previous parameter
	OR(2) ↓ OR(16)	2 input OR gate ↓ 16 input OR gate	Operates on the 2 previous parameters ↓ Operates on the 16 previous parameters
	AND(2) ↓ AND(16)	2 input AND gate ↓ 16 input AND gate	Operates on the 2 previous parameters ↓ Operates on the 16 previous parameters
	NOR(2) ↓ NOR(16)	2 input NOR gate ↓ 16 input NOR gate	Operates on the 2 previous parameters ↓ Operates on the 16 previous parameters
	NAND(2) ↓ NAND(16)	2 input NAND gate ↓ 16 input NAND gate	Operates on the 2 previous parameters ↓ Operates on the 16 previous parameters
	XOR(2)	2 input Exclusive OR gate	Operates on the 2 previous parameters
	LATCH (S,R)	Latch (set, reset): reset-dominant	The parameter preceding LATCH(S,R) is the reset input. The parameter preceding the reset input is the set input.
Timer	TIMER 1 ↓ TIMER 32	Timer set with FlexLogic timer 1 settings ↓ Timer set with FlexLogic timer 32 settings	The timer is started by the preceding parameter. The output of the timer is TIMER #.
Assign virtual output	= Virt Op 1 ↓ = Virt Op 96	Assigns previous FlexLogic operand to virtual output 1 ↓ Assigns previous FlexLogic operand to virtual output 96	The virtual output is set by the preceding parameter

5.6.2 FlexLogic rules

When forming a FlexLogic equation, the sequence in the linear array of parameters must follow these general rules:

1. Operands must precede the operator that uses the operands as inputs.
2. Operators have only one output. The output of an operator must be used to create a virtual output if it is to be used as an input to two or more operators.
3. Assigning the output of an operator to a virtual output terminates the equation.
4. A timer operator (for example, "TIMER 1") or virtual output assignment (for example, " = Virt Op 1") can be used once only. If this rule is broken, a syntax error is declared.

5.6.3 FlexLogic evaluation

Each equation is evaluated in the ascending order in which the parameters have been entered.

NOTE

FlexLogic provides built-in latches that by definition have a memory action, remaining in the set state after the set input has been asserted. These built-in latches are reset dominant, meaning that if logical "1" is applied to both set and reset entries simultaneously, then the output of the latch is logical "0." However, they are volatile, meaning that they reset upon removal of control power.

When making changes to FlexLogic entries in the settings, all FlexLogic equations are re-compiled whenever any new FlexLogic entry value is entered, and as a result of the re-compile all latches are reset automatically.

To implement FlexLogic using a graphical user interface, see the FlexLogic Design and Monitoring using Engineer section in the previous chapter.

5.6.4 FlexLogic example

This section provides an example of logic implementation for a typical application. The sequence of steps is important to minimize the work to develop the relay settings. Note that the example in the following figure demonstrates the procedure, not to solve a specific application situation.

Note that there is also a graphical interface with which to draw logic and populate FlexLogic equation entries. See the Engineer content at the end of the previous chapter.

In the example, it is assumed that logic has already been programmed to produce virtual outputs 1 and 2, and is only a part of the full set of equations used. When using FlexLogic, it is important to make a note of each virtual output used; a virtual output designation (1 to 96) can be assigned only once.

Figure 5-98: Logic example

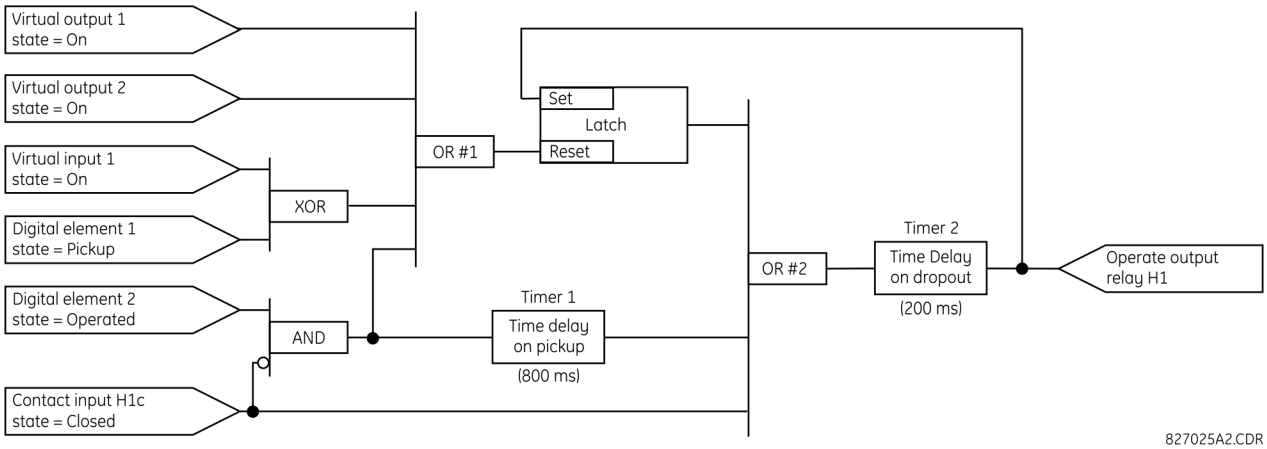

1. Inspect the example logic diagram to determine if the required logic can be implemented with the FlexLogic operators. If this is not possible, the logic must be altered until this condition is satisfied. Once done, count the inputs to each gate to verify that the number of inputs does not exceed the FlexLogic limits, which is unlikely but possible. If the number of inputs is too high, subdivide the inputs into multiple gates to produce an equivalent. For example, if 25 inputs to an AND gate are required, connect Inputs 1 through 16 to AND(16), 17 through 25 to AND(9), and the outputs from these two gates to AND(2).

   Inspect each operator between the initial operands and final virtual outputs to determine if the output from the operator is used as an input to more than one following operator. If so, the operator output must be assigned as a virtual output.

   For the example shown, the output of the AND gate is used as an input to both OR#1 and Timer 1, and must therefore be made a virtual output and assigned the next available number (that is, Virtual Output 3). The final output must also be assigned to a virtual output as virtual output 4, which is programmed in the contact output section to operate relay H1 (that is, contact output H1).

   Therefore, the required logic can be implemented with two FlexLogic equations with outputs of virtual output 3 and virtual output 4, shown as follows.

Figure 5-99: Logic example with virtual outputs

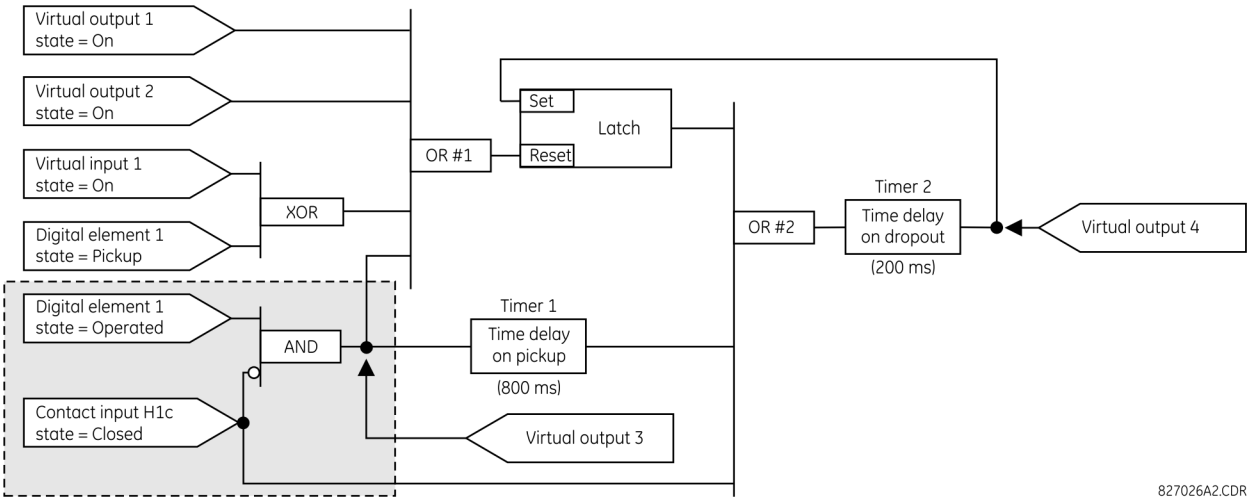

2. Prepare a logic diagram for the equation to produce virtual output 3, as this output is used as an operand in the virtual output 4 equation (create the equation for every output that is used as an operand first, so that when these operands are required they already have been evaluated and assigned to a specific virtual output). The logic for virtual output 3 is shown as follows with the final output assigned.

Figure 5-100: Logic for virtual output 3

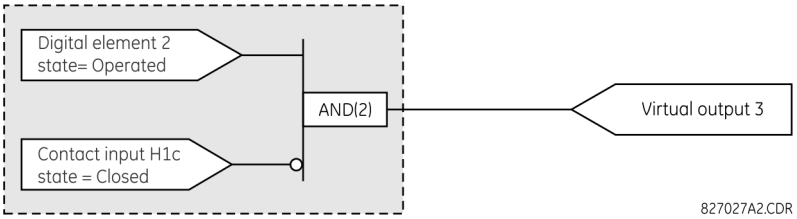

3. Prepare a logic diagram for virtual output 4, replacing the logic ahead of virtual output 3 with a symbol identified as virtual output 3, shown as follows.

Figure 5-101: Logic for virtual output 4

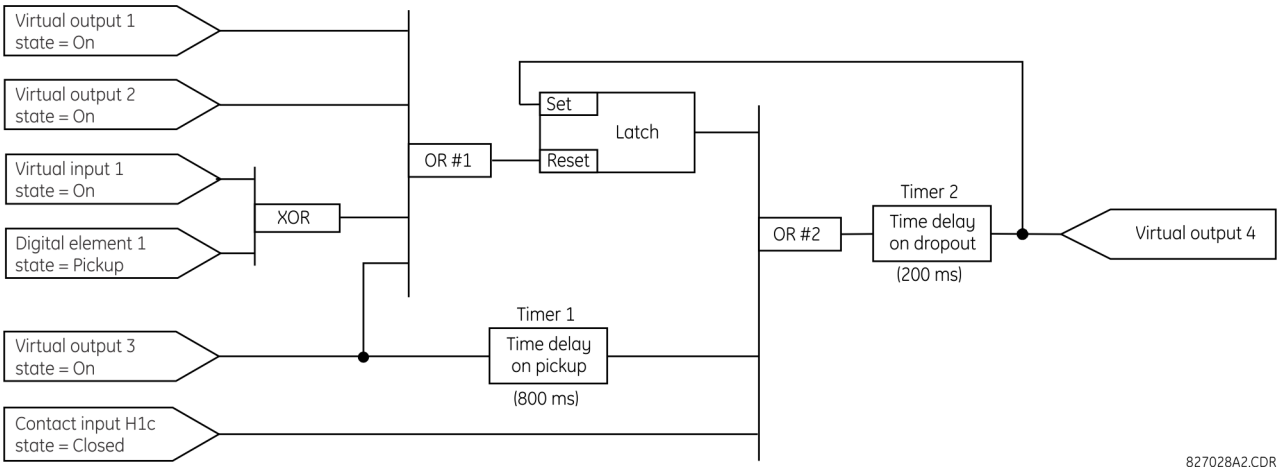

4. Program the FlexLogic equation for virtual output 3 by translating the logic into available FlexLogic parameters. The equation is formed one parameter at a time until the required logic is complete. It is generally easier to start at the output end of the equation and work back towards the input, as shown in the following steps. It is also recommended

to list operator inputs from bottom to top. For demonstration, the final outputs are arbitrarily identified as parameter 99, and each preceding parameter decremented by one in turn. Until accustomed to using FlexLogic, it is suggested that a worksheet with a series of cells marked with the arbitrary parameter numbers be prepared shown as follows.

Figure 5-102: FlexLogic worksheet

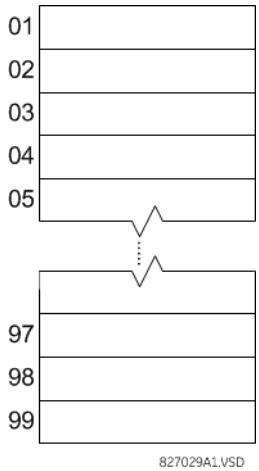

5. Following the procedure outlined, start with parameter 99, as follows:
   - 99: The final output of the equation is virtual output 3, which is created by the operator "= Virt Op n". This parameter is therefore "= Virt Op 3".
   - 98: The gate preceding the output is an AND, which in this case requires two inputs. The operator for this gate is a 2-input AND so the parameter is “AND(2)”. Note that FlexLogic rules require that the number of inputs to most types of operators must be specified to identify the operands for the gate. As the 2-input AND operates on the two operands preceding it, these inputs must be specified, starting with the lower.
   - 97: This lower input to the AND gate must be passed through an inverter (the NOT operator) so the next parameter is “NOT”. The NOT operator acts upon the operand immediately preceding it, so specify the inverter input next.
   - 96: The input to the NOT gate is to be contact input H1c. The ON state of a contact input can be programmed to be set when the contact is either open or closed. Assume for this example that the state is to be ON for a closed contact. The operand is therefore “Cont Ip H1c On”.
   - 95: The last step in the procedure is to specify the upper input to the AND gate, the operated state of digital element 2. This operand is "DIG ELEM 2 OP".

   Writing the parameters in numerical order forms the equation for virtual output 3:

```
[95] DIG ELEM 2 OP
[96] Cont Ip H1c On
[97] NOT
[98] AND(2)
[99] = Virt Op 3
```

   It is now possible to check that this selection of parameters produces the required logic by converting the set of parameters into a logic diagram. The result of this process is shown in the figure, which is compared to the logic for virtual output 3 diagram as a check.

Figure 5-103: FlexLogic equation for virtual output 3

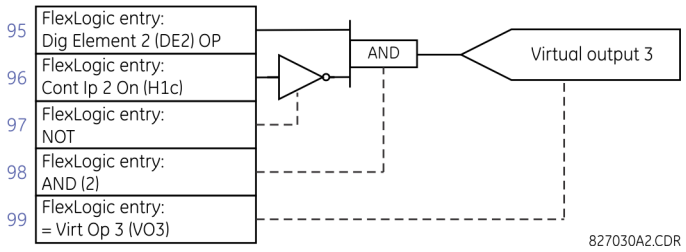

6. Repeating the process described for virtual output 3, select the FlexLogic parameters for Virtual Output 4.
   - 99: The final output of the equation is virtual output 4, which is parameter "= Virt Op 4".
   - 98: The operator preceding the output is timer 2, which is operand "TIMER 2". Note that the settings required for the timer are established in the timer programming section.
   - 97: The operator preceding timer 2 is OR #2, a 3-input OR, which is parameter "OR(3)".
   - 96: The lowest input to OR #2 is operand "Cont Ip H1c On".
   - 95: The center input to OR #2 is operand "TIMER 1".
   - 94: The input to timer 1 is operand "Virt Op 3 On".
   - 93: The upper input to OR #2 is operand "LATCH (S,R)".
   - 92: There are two inputs to a latch, and the input immediately preceding the latch reset is OR #1, a 4-input OR, which is parameter "OR(4)".
   - 91: The lowest input to OR #1 is operand "Virt Op 3 On".
   - 90: The input just above the lowest input to OR #1 is operand "XOR(2)".
   - 89: The lower input to the XOR is operand "DIG ELEM 1 PKP".
   - 88: The upper input to the XOR is operand "Virt Ip 1 On".
   - 87: The input just below the upper input to OR #1 is operand "Virt Op 2 On".
   - 86: The upper input to OR #1 is operand "Virt Op 1 On".
   - 85: The last parameter is used to set the latch, and is operand "Virt Op 4 On".

   The equation for virtual output 4 is:

```
[85] Virt Op 4 On
[86] Virt Op 1 On
[87] Virt Op 2 On
[88] Virt Ip 1 On
[89] DIG ELEM 1 PKP
[90] XOR(2)
[91] Virt Op 3 On
[92] OR(4)
[93] LATCH (S,R)
[94] Virt Op 3 On
[95] TIMER 1
[96] Cont Ip H1c On
[97] OR(3)
[98] TIMER 2
[99] = Virt Op 4
```

   Now check that the selection of parameters produce the required logic by converting the set of parameters into a logic diagram. The result is shown in the figure, which is compared to the logic for virtual output 4 diagram as a check.

Figure 5-104: FlexLogic equation for virtual output 4

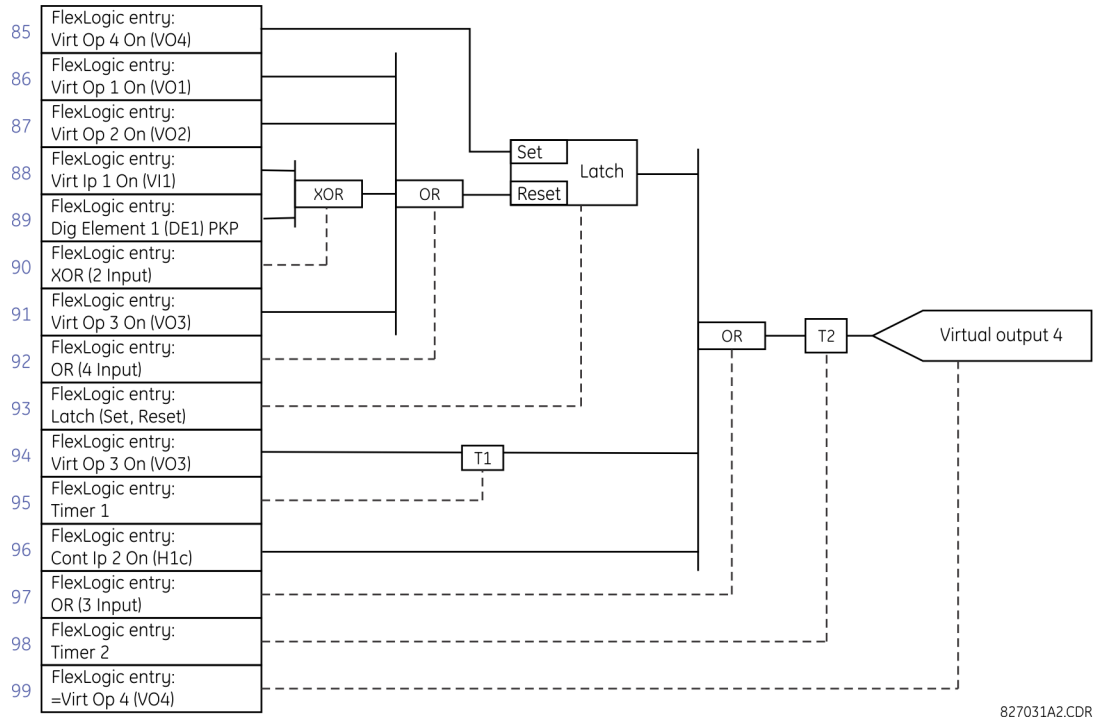

7. Now write the complete FlexLogic expression required to implement the logic, making an effort to assemble the equation in an order where Virtual Outputs that are used as inputs to operators are created before needed. In cases where a lot of processing is required to perform logic, this can be difficult to achieve, but in most cases does not cause problems as all logic is calculated at least four times per power frequency cycle. The possibility of a problem caused by sequential processing emphasizes the necessity to test the performance of FlexLogic before it is placed in service.

   In the following equation, virtual output 3 is used as an input to both latch 1 and timer 1 as arranged in the following order:

```
DIG ELEM 2 OP
Cont Ip H1c On
NOT
AND(2)
= Virt Op 3
Virt Op 4 On
Virt Op 1 On
Virt Op 2 On
Virt Ip 1 On
DIG ELEM 1 PKP
XOR(2)
Virt Op 3 On
OR(4)
LATCH (S,R)
Virt Op 3 On
TIMER 1
Cont Ip H1c On
OR(3)
TIMER 2
= Virt Op 4
END
```

   In this expression, the virtual output 4 input to the four-input OR is listed before it is created. This is typical of a form of feedback, in this case, used to create a seal-in effect with the latch, and is correct.

8. Always test the logic after it is loaded into the relay, in the same way as has been used in the past. Testing can be simplified by placing an "END" operator within the overall set of FlexLogic equations. The equations are evaluated up

to the first "END" operator.

The "On" and "Off" operands can be placed in an equation to establish a known set of conditions for test purposes, and the "INSERT" and "DELETE" commands can be used to modify equations.

5.6.5 FlexLogic equation editor

SETTINGS ⇨⇩ FLEXLOGIC ⇨ FLEXLOGIC EQUATION EDITOR

■ FLEXLOGIC ■ EQUATION EDITOR	⇔	FLEXLOGIC ENTRY 1: END	Range: FlexLogic operands
		⇩	
	⇧	FLEXLOGIC ENTRY 1024: END	Range: FlexLogic operands

There are 1,024 FlexLogic entries available, numbered from 1 to 1024, with default END entry settings. If a "Disabled" element is selected as a FlexLogic entry, the associated state flag is never set to '1'. Press the **+/–** key when editing FlexLogic equations to quickly scan through the major parameter types.

5.6.6 FlexLogic timers

SETTINGS ⇨⇩ FLEXLOGIC ⇨⇩ FLEXLOGIC TIMERS ⇨ FLEXLOGIC TIMER 1(32)

■ FLEXLOGIC ■ TIMER 1	⇔	TIMER 1 TYPE: millisecond	Range: millisecond, second, minute
	⇧⇩	TIMER 1 PICKUP DELAY: 0	Range: 0 to 60000 in steps of 1
	⇧	TIMER 1 DROPOUT DELAY: 0	Range: 0 to 60000 in steps of 1

There are 32 identical FlexLogic timers available. These timers are used as operators for FlexLogic equations.

TIMER 1 TYPE — Selects the time measurement unit.

TIMER 1 PICKUP DELAY — Sets the time delay to pickup. If a pickup delay is not required, set this function to "0."

TIMER 1 DROPOUT DELAY — Sets the time delay to dropout. If a dropout delay is not required, set this function to "0."

5.6.7 FlexElements

SETTINGS ⇨⇩ FLEXLOGIC ⇨⇩ FLEXELEMENTS ⇨ FLEXELEMENT 1(8)

■ FLEXELEMENT 1 ■	⇔	FLEXELEMENT 1 FUNCTION: Disabled	Range: Disabled, Enabled
	⇧⇩	FLEXELEMENT 1 NAME: FxE 1	Range: up to six alphanumeric characters
	⇧⇩	FLEXELEMENT 1 +IN: Off	Range: Off, any analog actual value parameter
	⇧⇩	FLEXELEMENT 1 -IN: Off	Range: Off, any analog actual value parameter
	⇧⇩	FLEXELEMENT 1 INPUT MODE: SIGNED	Range: SIGNED, ABSOLUTE
	⇧⇩	FLEXELEMENT 1 COMP MODE: LEVEL	Range: LEVEL, DELTA
	⇧⇩	FLEXELEMENT 1 DIRECTION: OVER	Range: OVER, UNDER

⇕	**FLEXELEMENT 1 PICKUP: 1.000 pu**	Range: –90.000 to 90.000 pu in steps of 0.001
⇕	**FLEXELEMENT 1 HYSTERESIS: 3.0%**	Range: 0.1 to 50.0% in steps of 0.1
⇕	**FLEXELEMENT 1 dt UNIT: Milliseconds**	Range: Milliseconds, Seconds, Minutes
⇕	**FLEXELEMENT 1 dt: 20**	Range: 20 to 86400 in steps of 1
⇕	**FLEXELEMENT 1 PKP DELAY: 0.000 s**	Range: 0.000 to 65.535 s in steps of 0.001
⇕	**FLEXELEMENT 1 RST DELAY: 0.000 s**	Range: 0.000 to 65.535 s in steps of 0.001
⇕	**FLEXELEMENT 1 BLK: Off**	Range: FlexLogic operand
⇕	**FLEXELEMENT 1 TARGET: Self-reset**	Range: Self-reset, Disabled, Latched
⇧	**FLEXELEMENT 1 EVENTS: Disabled**	Range: Disabled, Enabled

A FlexElement is a universal comparator used to monitor any analog actual value calculated by the relay or a net difference of any two analog actual values of the same type. The effective operating signal can be treated as a signed number or its absolute value can be used.

FlexElements run every half power cycle (every four protection passes).

The element can be programmed to respond either to a signal level or to a rate-of-change (delta) over a pre-defined period of time. The output operand is asserted when the operating signal is higher than a threshold or lower than a threshold, as per your choice.

Figure 5-105: FlexElement logic

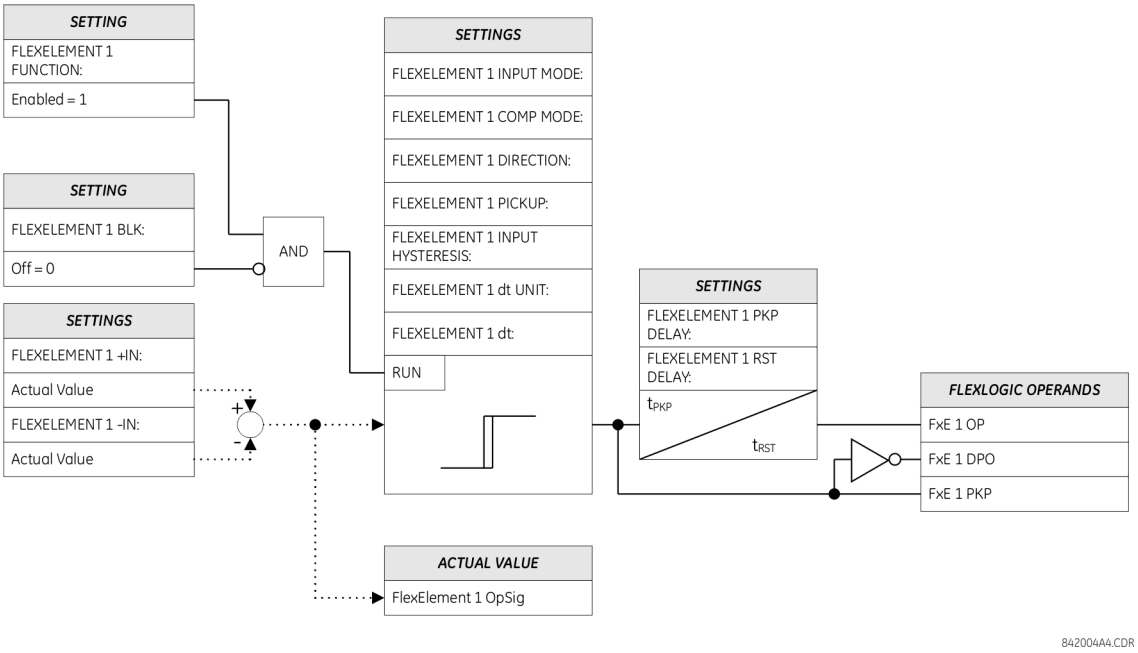

FLEXELEMENT 1 +IN — This setting specifies the first (non-inverted) input to the FlexElement. Zero is assumed as the input if this setting is set to "Off." For proper operation of the element, at least one input must be selected. Otherwise, the element does not assert its output operands.

FLEXELEMENT 1 –IN — Specifies the second (inverted) input to the FlexElement. Zero is assumed as the input if this setting is set to "Off." For proper operation of the element, at least one input must be selected. Otherwise, the element does not assert its output operands. This input is used to invert the signal if needed for convenience, or to make the element respond to a differential signal, such as for a top-bottom oil temperature differential alarm. The element does not operate if the two input signals are of different types, for example if one tries to use active power and phase angle to build the effective operating signal.

The element responds directly to the differential signal if the **FLEXELEMENT 1 INPUT MODE** setting is set to "Signed" The element responds to the absolute value of the differential signal if this setting is set to "Absolute." Sample applications for the "Absolute" setting include monitoring the angular difference between two phasors with a symmetrical limit angle in both directions, monitoring power regardless of its direction, or monitoring a trend.

The element responds directly to its operating signal—as defined by the **FLEXELEMENT 1 +IN**, **FLEXELEMENT 1 –IN** and **FLEXELEMENT 1 INPUT MODE** settings—if the **FLEXELEMENT 1 COMP MODE** setting is set to "Level." The element responds to the rate of change of its operating signal if the **FLEXELEMENT 1 COMP MODE** setting is set to "Delta." In this case, the **FLEXELEMENT 1 dt UNIT** and **FLEXELEMENT 1 dt** settings specify how the rate of change is derived.

FLEXELEMENT 1 DIRECTION — Enables the relay to respond to either high or low values of the operating signal. The following figure explains the application of the **FLEXELEMENT 1 DIRECTION**, **FLEXELEMENT 1 PICKUP**, and **FLEXELEMENT 1 HYSTERESIS** settings.

Figure 5-106: FlexElement direction, pickup, and hysteresis

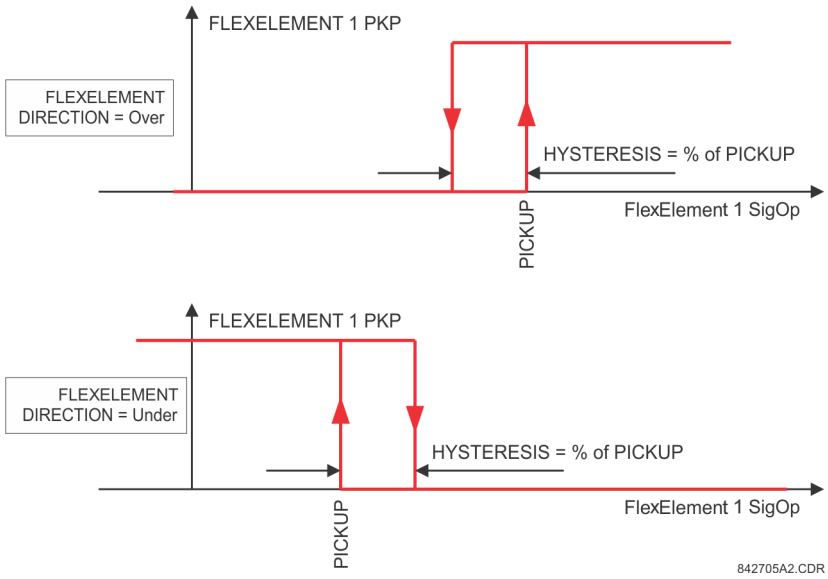

In conjunction with the **FLEXELEMENT 1 INPUT MODE** setting, the element can be programmed to provide two extra characteristics, as shown in the following figure.

Figure 5-107: FlexElement input mode setting

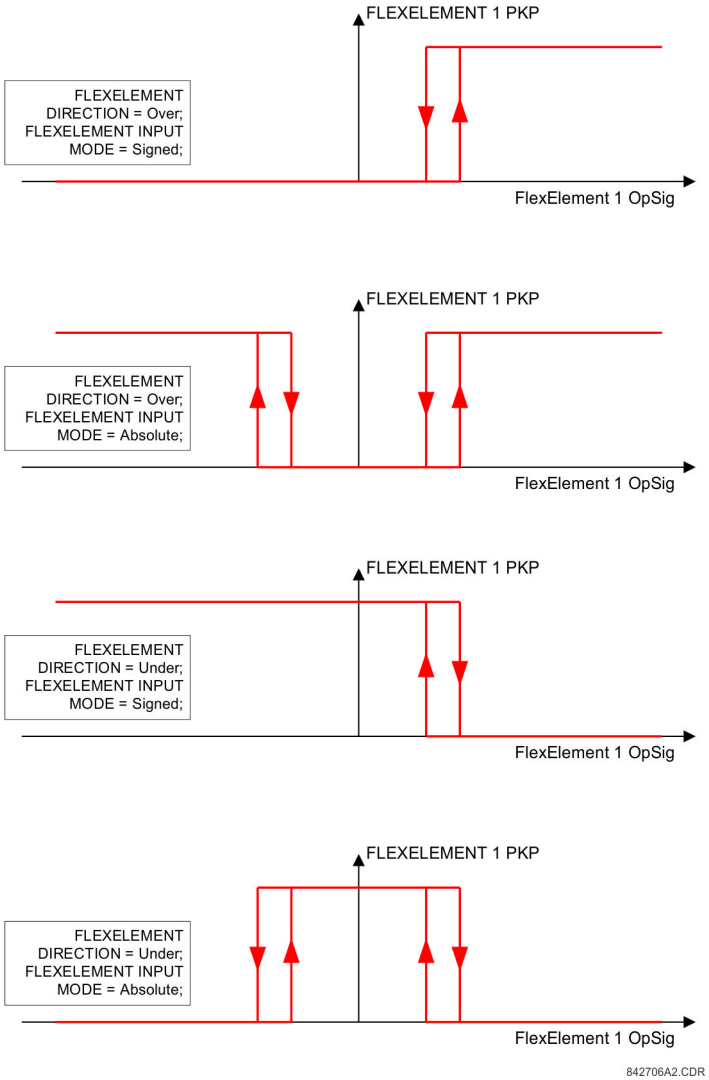

FLEXELEMENT 1 PICKUP — This setting specifies the operating threshold for the effective operating signal of the element. If set to "Over," the element picks up when the operating signal exceeds the **FLEXELEMENT 1 PICKUP** value. If set to "Under," the element picks up when the operating signal falls below the **FLEXELEMENT 1 PICKUP** value.

When using FlexElements for Voltage Elements, 1 pu is always equal to phase to ground voltage nominal secondary voltage, even if you select a phase to phase voltage as an operating quantity.

FLEXELEMENT 1 HYSTERESIS — This setting controls the element dropout. Notice that both the operating signal and the pickup threshold can be negative, facilitating applications such as reverse power alarm protection. The FlexElement can be programmed to work with all analog actual values measured by the relay. The **FLEXELEMENT 1 PICKUP** setting is entered in per-unit values using the following definitions of the base units.

Table 5-28: FlexElement base units

Unit	Description
87L SIGNALS (Local IA Mag, IB, and IC) (Diff Curr IA Mag, IB, and IC) (Terminal 1 IA Mag, IB, and IC) (Terminal 2 IA Mag, IB and IC)	I_{BASE} = maximum primary RMS value of the +IN and –IN inputs (CT primary for source currents, and 87L source primary current for line differential currents)

Unit	Description
87L SIGNALS (Op Square Curr IA, IB, and IC) (Rest Square Curr IA, IB, and IC)	BASE = Squared CT secondary of the 87L source
BREAKER ACC ARCING AMPS (Brk X Acc Arc Amp A, B, and C)	BASE = 2000 $kA^2 \times$ cycle
BREAKER ARCING AMPS (Brk X Arc Amp A, B, and C)	BASE = 1 $kA^2 \times$ cycle
DCmA	BASE = maximum value of the **DCMA INPUT MAX** setting for the two transducers configured under the +IN and –IN inputs
DELTA TIME	BASE = 1 µs
FAULT LOCATION	BASE = Line Length as specified in Fault Report
FREQUENCY	f_{BASE} = 1 Hz
FREQUENCY RATE OF CHANGE	df/dt_{BASE} = 1 Hz/s
PHASE ANGLE	φ_{BASE} = 360 degrees (see the UR angle referencing convention)
POWER FACTOR	PF_{BASE} = 1.00
RTDs	BASE = 100°C
SENSITIVE DIR POWER (Sns Dir Power)	P_{BASE} = maximum value of $3 \times V_{BASE} \times I_{BASE}$ for the +IN and –IN inputs of the sources configured for the sensitive power directional element(s).
SOURCE CURRENT	I_{BASE} = maximum nominal primary RMS value of the +IN and –IN inputs
SOURCE ENERGY (Positive and Negative Watthours, Positive and Negative Varhours)	E_{BASE} = 10000 MWh or MVAh, respectively
SOURCE POWER	P_{BASE} = maximum value of $V_{BASE} \times I_{BASE}$ for the +IN and –IN inputs
SOURCE THD & HARMONICS	BASE = 1%
SOURCE VOLTAGE	V_{BASE} = maximum nominal primary RMS value of the +IN and –IN inputs
SYNCHROCHECK (Max Delta Volts)	V_{BASE} = maximum primary RMS value of all the sources related to the +IN and –IN inputs
VOLTS PER HERTZ	BASE = 1.00 pu
Z_{BASE}	Z_{BASE} = PhaseVTSecondary / PhaseCTSecondary, where PhaseVTSecondary and PhaseCTSecondary are the secondary nominal voltage and the secondary nominal current of the distance source. In case multiple CT inputs are summed as one source current and mapped as the distance source, use the PhaseCTSecondary value from the CT with the highest primary nominal current. Distance source is specified in setting under **SETTINGS ⇨⇩ GROUPED ELEMENTS ⇨⇩ SETTING GROUP 1(6) ⇨ DISTANCE**. PhaseVTSecondary and PhaseCTSecondary are specified in setting under **SETTINGS ⇨⇩ SYSTEM SETUP ⇨⇩ AC INPUTS**.

FLEXELEMENT 1 HYSTERESIS — This setting defines the pickup–dropout relation of the element by specifying the width of the hysteresis loop as a percentage of the pickup value as shown in the FlexElement Direction, Pickup, and Hysteresis diagram.

FLEXELEMENT 1 dt UNIT — Specifies the time unit for the setting **FLEXELEMENT 1 dt**. This setting is applicable only if **FLEXELEMENT 1 COMP MODE** is set to "Delta."

FLEXELEMENT 1 dt — Specifies duration of the time interval for the rate of change mode of operation. This setting is applicable only if **FLEXELEMENT 1 COMP MODE** is set to "Delta."

FLEXELEMENT 1 PKP DELAY — Specifies the pickup delay of the element.

FLEXELEMENT 1 RST DELAY — Specifies the reset delay of the element.

5.6.8 Non-volatile latches

SETTINGS ⇨⇩ FLEXLOGIC ⇨⇩ NON-VOLATILE LATCHES ⇨ LATCH 1(16)

■ **LATCH 1** ■	⇔	**LATCH 1** **FUNCTION: Disabled**	Range: Disabled, Enabled

⇕	**LATCH 1 ID:** **NV Latch 1**	Range: up to 20 alphanumeric characters
⇕	**LATCH 1 TYPE:** **Reset Dominant**	Range: Reset Dominant, Set Dominant
⇕	**LATCH 1 SET:** **Off**	Range: FlexLogic operand
⇕	**LATCH 1 RESET:** **Off**	Range: FlexLogic operand
⇕	**LATCH 1** **TARGET: Self-reset**	Range: Self-reset, Latched, Disabled
⇧	**LATCH 1** **EVENTS: Disabled**	Range: Disabled, Enabled

The non-volatile latches provide a permanent logical flag that is stored safely and do not reset upon restart after the relay is powered down. Typical applications include sustaining operator commands or permanently blocking relay functions, such as Autorecloser, until a deliberate interface action resets the latch.

LATCH 1 TYPE — This setting characterizes Latch 1 to be Set- or Reset-dominant.

LATCH 1 SET — If asserted, the specified FlexLogic operands 'sets' Latch 1.

LATCH 1 RESET — If asserted, the specified FlexLogic operand 'resets' Latch 1.

Figure 5-108: Non-volatile latch operation table (N = 1 to 16) and logic

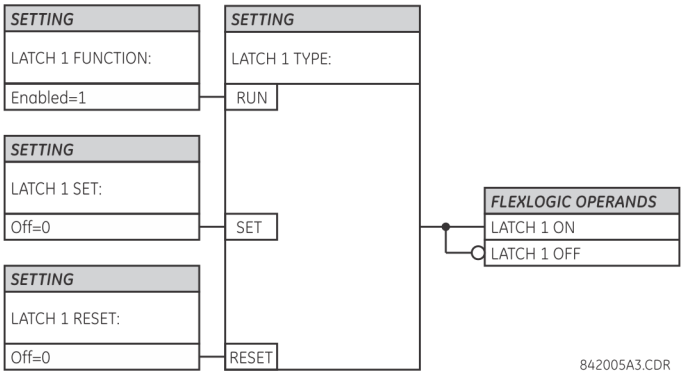

Latch n type	Latch n set	Latch n reset	Latch n on	Latch n off
Reset Dominant	ON	OFF	ON	OFF
	OFF	OFF	Previous State	Previous State
	ON	ON	OFF	ON
	OFF	ON	OFF	ON
Set Dominant	ON	OFF	ON	OFF
	ON	ON	ON	OFF
	OFF	OFF	Previous State	Previous State
	OFF	ON	OFF	ON

5.7 Grouped elements

5.7.1 Overview

Each protection element can be assigned up to six sets of settings with designations 1 to 6. The performance of these elements is defined by the active setting group at a given time. Multiple setting groups allow the user to conveniently change protection settings for different operating situations (for example, altered power system configuration or season of the year). The active setting group can be preset or selected in the **SETTING GROUPS** menu (see the Control Elements section later in this chapter). See also the Introduction to Elements section at the beginning of this chapter.

5.7.2 Setting group 1

SETTINGS ⇨⇩ GROUPED ELEMENTS ⇨ SETTING GROUP 1(6)

■ SETTING GROUP 1 ■	⇔	■ LINE DIFFERENTIAL ■ ELEMENTS	See below
	⇩	■ LINE PICKUP ■	See page 5-223
	⇩	■ DISTANCE ■	See page 5-225
	⇩	■ POWER SWING ■ DETECT	See page 5-246
	⇩	■ LOAD ENCROACHMENT ■	See page 5-255
	⇩	■ PHASE CURRENT ■	See page 5-256
	⇩	■ NEUTRAL CURRENT ■	See page 5-268
	⇩	■ WATTMETRIC ■ GROUND FAULT	See page 5-276
	⇩	■ GROUND CURRENT ■	See page 5-280
	⇩	■ NEGATIVE SEQUENCE ■ CURRENT	See page 5-290
	⇩	■ BREAKER FAILURE ■	See page 5-296
	⇩	■ VOLTAGE ELEMENTS ■	See page 5-305
	⇩	■ SUPERVISING ■ ELEMENTS	See page 5-317
	⇧	■ POWER ■	See page 5-324

Each of the six setting group menus is identical. Setting group 1 (the default active group) is active automatically when no other group is active.

If the device incorrectly switches to group 1 after power cycling, upgrade the firmware to version 7.31 or later to correct this issue.

5.7.3 Line differential elements

SETTINGS ⇨⇩ GROUPED ELEMENTS ⇨ SETTING GROUP 1(6) ⇨ LINE DIFFERENTIAL ELEMENTS

■ LINE DIFFERENTIAL ■ ELEMENTS	⇔	■ CURRENT ■ DIFFERENTIAL	See below
	⇧	■ STUB BUS ■	See page 5-222

5.7.3.1 Current differential (ANSI 87L)

SETTINGS ⇨⇩ GROUPED ELEMENTS ⇨ SETTING GROUP 1(6) ⇨ LINE DIFFERENTIAL... ⇨ CURRENT DIFFERENTIAL

■ CURRENT ■ DIFFERENTIAL	⇔	CURRENT DIFF FUNCTION: Disabled	Range: Disabled, Enabled
	⇩	CURRENT DIFF SIGNAL SOURCE 1: SRC 1	Range: SRC 1, SRC 2, SRC 3, SRC 4
	⇩	CURRENT DIFF SIGNAL SOURCE 2: None	Range: None, SRC 1, SRC 2, SRC 3, SRC 4
	⇩	CURRENT DIFF SIGNAL SOURCE 3: None	Range: None, SRC 1, SRC 2, SRC 3, SRC 4
	⇩	CURRENT DIFF SIGNAL SOURCE 4: None	Range: None, SRC 1, SRC 2, SRC 3, SRC 4
	⇩	CURRENT DIFF BLOCK: Off	Range: FlexLogic operand
	⇩	CURRENT DIFF PICKUP: 0.20 pu	Range: 0.10 to 4.00 pu in steps of 0.01
	⇩	CURRENT DIFF CT TAP 1: 1.00	Range: 0.05 to 20.00 in steps of 0.01
	⇩	CURRENT DIFF CT TAP 2: 1.00	Range: 0.05 to 20.00 in steps of 0.01
	⇩	CURRENT DIFF RESTRAINT 1: 30%	Range: 1 to 50% in steps of 1
	⇩	CURRENT DIFF RESTRAINT 2: 50%	Range: 1 to 70% in steps of 1
	⇩	CURRENT DIFF BREAK PT: 1.0 pu	Range: 0.0 to 20.0 pu in steps of 0.1
	⇩	INRUSH INHIBIT MODE: Disabled	Range: Disabled, Per phase, 2-out-of-3, Average
	⇩	INRUSH INHIBIT LEVEL: 20% fo	Range: 1.0 to 40.0% f_0 in steps of 0.1
	⇩	CURRENT DIFF GND FUNCTION: Disabled	Range: Disabled, Enabled
	⇩	CURRENT DIFF GND PICKUP: 0.10 pu	Range: 0.05 to 1.00 pu in steps of 0.01
	⇩	CURRENT DIFF GND RESTRAINT: 25%	Range: 1 to 50% in steps of 1
	⇩	CURRENT DIFF GND DELAY: 0.10 s	Range: 0.00 to 5.00 s in steps of 0.01
	⇩	CURRENT DIFF DTT: Enabled	Range: Disabled, Enabled

⇕	**CURRENT DIFF KEY DTT: Off**	Range: FlexLogic operand
⇕	**CURRENT DIFF TARGET: Self-reset**	Range: Self-reset, Latched, Disabled
⇧	**CURRENT DIFF EVENTS: Disabled**	Range: Disabled, Enabled

NOTE

See the Relay Synchronization section in the Theory of Operation chapter for information on channel failure, lost packet, CRC failure, and PFLL failure alarms.

CURRENT DIFF SIGNAL SOURCE 1 — This setting selects the first source for the current differential element local operating current. If more than one source is configured, the other source currents are scaled to the CT with the maximum primary current assigned by the **CURRENT DIFF SIGNAL SOURCE 1** to **CURRENT DIFF SIGNAL SOURCE 4** settings. This source is mandatory and is assigned with the **SYSTEM SETUP ⇨⇩ SIGNAL SOURCES ⇨ SOURCE 1** menu.

CURRENT DIFF SIGNAL SOURCE 2, 3, 4 — These settings select the second, third, and fourth sources for the current differential function for applications where more than one set of CT circuitry is connected directly to the L90.

CURRENT DIFF BLOCK — This setting selects a FlexLogic operand to block the operation of the current differential element.

CURRENT DIFF PICKUP — This setting is used to select the current differential pickup value.

CURRENT DIFF CT TAP 1, 2 — These settings adapt the remote terminal 1 or 2 (communication channel 1 and 2 respectively) CT ratio to the local ratio if the CT ratios for the local and remote terminals differ. In two-terminal, two-channel applications use the same value for both TAP 1 and TAP 2 settings, and in three-terminals accordingly remote 1 and 2 CTs. The setting value is determined by CT_{prim_rem} / CT_{prim_loc} for local and remote terminal CTs (where CT_{prim_rem} / CT_{prim_loc} is referred to as the CT primary rated current). Ratio matching must always be performed against the remote CT with the maximum CT primary defined by the **CURRENT DIFF SIGNAL SOURCE 1** through **CURRENT DIFF SIGNAL SOURCE 4** settings. See the Current Differential Settings example in the Application of Settings chapter for details.

When an in-zone power transformer is present, calculate and use this setting by taking into account the in-zone power transformer as follows.

$$\text{CT Tap} = \frac{CT_{prim_rem} \times V_{prim_rem}}{CT_{prim_loc} \times V_{prim_loc}} \quad \text{for remote terminals 1 and 2, respecitvely} \qquad \textbf{Eq. 5-14}$$

In this equation, V_{prim_rem} is primary nominal voltage of the transformer winding at the remote terminal and V_{prim_loc} is primary nominal voltage of the transformer winding at the local terminal.

NOTE

Apply different CT ratios with care because an external fault current can cause different CT performance, especially when CTs at opposite ends of the line can saturate asymmetrically. A large difference in CT ratios, resulting in high CT TAP settings is recommended to be validated for a given application using the "L90 CT Saturation Analysis" tool from the GE Multilin website. Download, and extract the files, enter CT parameters in the spreadsheet, and click the **Analyze** button to obtain CT saturation analysis.

CURRENT DIFF RESTRAINT 1, 2 — These settings select the bias characteristic for the first and second slope, respectively.

CURRENT DIFF BREAK PT — This setting is used to select an intersection point between the two slopes.

INRUSH INHIBIT MODE — This setting selects the mode for blocking differential protection during magnetizing inrush conditions. Modern transformers can produce small second harmonic ratios during inrush conditions. This can result in undesired tripping of the protected line. Reducing the second harmonic inhibit threshold can jeopardize dependability and speed of differential protection. When low, the second harmonic ratio causes problems in one phase only. This can be utilized to ensure security by applying cross-phase blocking rather than lowering the inrush inhibit threshold.

If set to “Disabled”, no inrush inhibit action is taken.

If set to “Per phase”, the L90 performs inrush inhibit individually in each phase.

If set to “2-out-of-3,” the L90 checks second harmonic level in all three phases individually. If any two phases establish an inhibiting condition, then the remaining phase is restrained automatically.

If set to "Average", the L90 first calculates the average second harmonic ratio, then applies the inrush threshold to the calculated average.

INRUSH INHIBIT LEVEL — This setting specifies the level of second harmonic component in the transformer magnetizing inrush current, above which the current differential element is inhibited from operating. The value of the **INRUSH INHIBIT MODE** setting must be taken into account when programming this value. This setting is typically programmed as "20% f_0."

CURRENT DIFF GND FUNCTION — This setting enables and disabled the 87LG neutral differential element, which can be used to detect high-resistive faults. This element uses restrained characteristics to cope with spurious zero-sequence current during system unbalance and signal distortions. The differential neutral current is calculated as the vector sum of all in-zone CT input neutral currents. The restraint current is derived as the maximum of phase currents from all terminals flowing through any individual CT, including breaker-and-a-half configurations. The 87LG neutral differential element is blocked when the phase current at any terminal is greater than 3 pu, since the phase differential element should operate for internal faults. To correctly derive the restraint quantity from the maximum through current at any terminal, it is important that the 87L phase-segregated differential pickup and slope settings be equal at all terminals. See the Application of Settings chapter for details.

CURRENT DIFF GND PICKUP — This setting specifies the pickup threshold for neutral current differential element.

CURRENT DIFF GND RESTRAINT — This setting specifies the bias characteristic for the neutral current differential element.

CURRENT DIFF GND DELAY — This setting specifies the operation delay for the neutral current differential element. Since this element is used to detect high-resistive faults where fault currents are relatively low, high-speed operation is usually not critical. This delay provides security against spurious neutral current during switch-off transients and external fault clearing.

CURRENT DIFF DTT — This setting enables and disables the sending of a direct transfer trip (DTT) by the current differential element on per single-phase basis to remote devices. To allow the L90 to restart from master-master to master-slave mode (very important on three-terminal applications), **CURR DIFF DTT** must be "Enabled."

CURRENT DIFF KEY DTT — This setting selects an additional protection element (besides the current differential element; for example, distance element or breaker failure) that keys the DTT on a per three-phase basis.

NOTE

For the current differential element to function properly, it is imperative that all L90 devices on the protected line have identical firmware revisions. For example, revision 5.62 in only compatible with 5.62, not 5.61 or 5.63.

Figure 5-109: Current differential logic

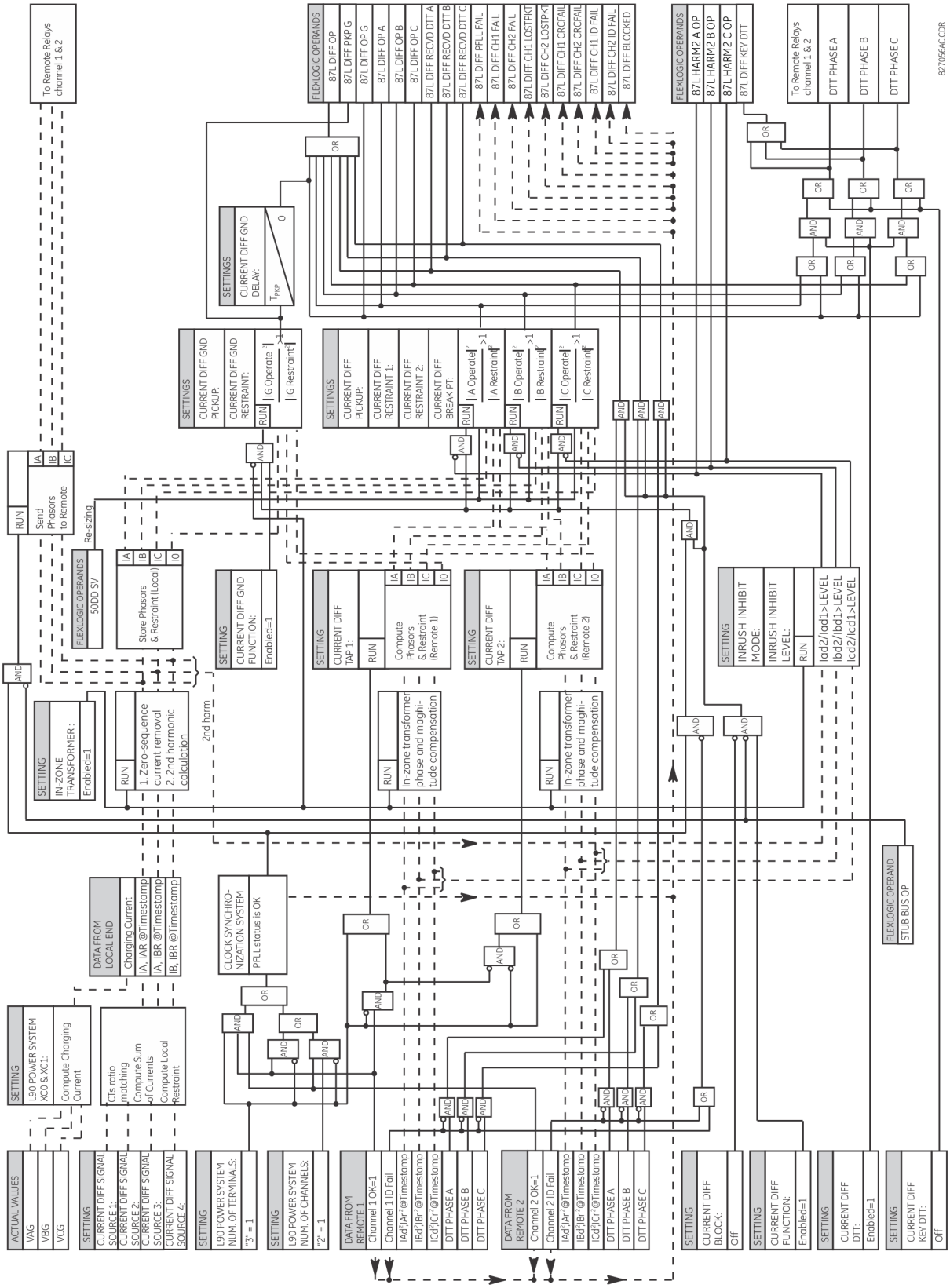

5.7.3.2 Stub bus

SETTINGS ⇨⇩ GROUPED ELEMENTS ⇨ SETTING GROUP 1(6) ⇨ LINE DIFFERENTIAL ELEMENT ⇨⇩ STUB BUS

■ STUB BUS ■	⇔	STUB BUS FUNCTION: Disabled	Range: Disabled, Enabled
	⇩	STUB BUS DISCONNECT: Off	Range: FlexLogic operand
	⇩	STUB BUS TRIGGER: Off	Range: FlexLogic operand
	⇩	STUB BUS TARGET: Self-reset	Range: Self-reset, Latched, Disabled
	⇧	STUB BUS EVENTS: Disabled	Range: Disabled, Enabled

The stub bus element protects for faults between two breakers in a breaker-and-a-half or ring bus configuration when the line disconnect switch is open. At the same time, if the line is still energized through the remote terminal(s), differential protection is still required (the line can still need to be energized because there is a tapped load on a two-terminal line or because the line is a three-terminal line with two of the terminals still connected). Correct operation for this condition is achieved by the local relay sending zero current values to the remote end(s) so that a local bus fault does not result in tripping the line. At the local end, the differential element is disabled and stub bus protection is provided by a user-selected overcurrent element. If there is a line fault, the remote end(s) trips on differential but local differential function and the DTT signal (if enabled) to the local end are blocked by the stub bus logic, allowing the local breakers to remain closed.

5

STUB BUS FUNCTION — There are three requirements for stub bus operation: the element must be enabled, an indication that the line disconnect is open, and the **STUB BUS TRIGGER** setting is set. There are two methods to set the stub bus trigger and thus setting up stub bus operation, as follows:

1. If **STUB BUS TRIGGER** is "On," the STUB BUS OPERATE operand picks up as soon as the disconnect switch opens, causing zero currents to be transmitted to remote end(s) and DTT receipt from remote end(s) to be permanently blocked. An overcurrent element, blocked by disconnect switch closed, provides protection for the local bus.
2. An alternate method is to set **STUB BUS TRIGGER** to be the pickup of an assigned instantaneous overcurrent element. The instantaneous overcurrent element must operate quickly enough to pick up the STUB BUS OPERATE operand, disable the local differential, and send zero currents to the other terminal(s). If the bus minimum fault current is above five times the instantaneous overcurrent pickup, tests have confirmed that the STUB BUS OPERATE operand always picks up correctly for a stub bus fault and prevents tripping of the remote terminal. If minimum stub bus fault current is below this value, then use method 1. Note also that correct testing of stub bus operation, when this method is used, requires sudden injection of a fault currents above five times instantaneous overcurrent pickup. The assigned current element needs to be mapped to the appropriate output contact(s) to trip the stub bus breakers. It should be blocked unless disconnect is open. To prevent 87L tripping from remote L90 relays still protecting the line, assign the auxiliary contact of line disconnect switch (logic "1" when line switch is open) to block the local 87L function by using the **CURRENT DIFF BLOCK** setting.

STUB BUS DISCONNECT — Selects a FlexLogic operand to represent the open state of auxiliary contact of line disconnect switch (logic "1" when line disconnect switch is open). If necessary, simple logic representing not only the line disconnect switch but also the closed state of the breakers can be created with FlexLogic and assigned to this setting.

STUB BUS TRIGGER — Selects a FlexLogic operand that causes the STUB BUS OPERATE operand to pick up if the line disconnect is open. It can be set either to "On" or to an instantaneous overcurrent element (as outlined). If the instantaneous overcurrent used for the stub bus protection is set with a time delay, then **STUB BUS TRIGGER** should use the associated instantaneous overcurrent pickup operand. The source assigned for the current of this element must cover the stub between CTs of the associated breakers and disconnect switch.

Figure 5-110: Stub bus logic

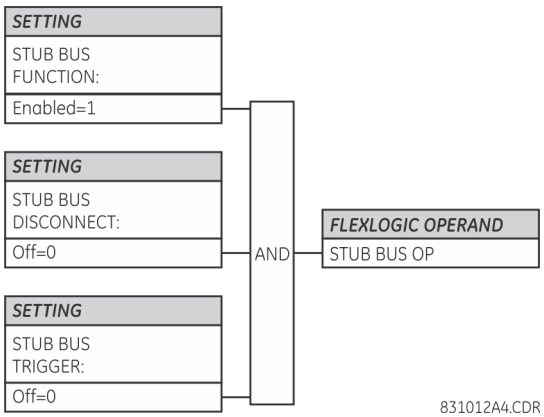

5.7.4 Line pickup

SETTINGS ⇨⇩ GROUPED ELEMENTS ⇨ SETTING GROUP 1(6) ⇨⇩ LINE PICKUP

■ LINE PICKUP ■	⇔	LINE PICKUP FUNCTION: Disabled	Range: Disabled, Enabled
	⇩	LINE PICKUP SIGNAL SOURCE: SRC 1	Range: SRC 1, SRC 2, SRC 3, SRC 4
	⇩	PHASE IOC LINE PICKUP: 1.000 pu	Range: 0.020 to 30.000 pu in steps of 0.001
	⇩	LINE PICKUP UV PKP: 0.700 pu	Range: 0.004 to 3.000 pu in steps of 0.001
	⇩	LINE END OPEN PICKUP DELAY: 0.150 s	Range: 0.000 to 65.535 s in steps of 0.001
	⇩	LINE END OPEN RESET DELAY: 0.090 s	Range: 0.000 to 65.535 s in steps of 0.001
	⇩	LINE PICKUP OV PKP DELAY: 0.040 s	Range: 0.000 to 65.535 s in steps of 0.001
	⇩	AR CO-ORD BYPASS: Enabled	Range: Disabled, Enabled
	⇩	AR CO-ORD PICKUP DELAY: 0.045 s	Range: 0.000 to 65.535 s in steps of 0.001
	⇩	AR CO-ORD RESET DELAY: 0.005 s	Range: 0.000 to 65.535 s in steps of 0.001
	⇩	TERMINAL OPEN: Off	Range: FlexLogic operand
	⇩	AR ACCELERATE: Off	Range: FlexLogic operand
	⇩	LINE PICKUP DISTANCE TRIP: Enabled	Range: Disabled, Enabled
	⇩	LINE PICKUP BLOCK: Off	Range: FlexLogic operand
	⇩	LINE PICKUP TARGET: Self-reset	Range: Self-reset, Latched, Disabled
	⇧	LINE PICKUP EVENTS: Disabled	Range: Disabled, Enabled

The line pickup feature uses a combination of undercurrent and undervoltage to identify a line that has been de-energized (line end open). Alternately assign a FlexLogic operand to the **TERMINAL OPEN** setting that specifies the terminal status. Three instantaneous overcurrent elements are used to identify a previously de-energized line that has been closed onto a fault. Faults other than close-in faults can be identified satisfactorily with the distance elements.

Co-ordination features are included to ensure satisfactory operation when high-speed automatic reclosure (AR) is employed. The **AR CO-ORD DELAY** setting allows the overcurrent setting to be below the expected load current seen after reclose. Co-ordination is achieved by all of the **LINE PICKP UV** elements resetting and blocking the trip path before the **AR CO-ORD DELAY** times out. The **AR CO-ORD BYPASS** setting is normally enabled. It is disabled if high speed autoreclosure is implemented.

The line pickup protection incorporates zone 1 extension capability. When the line is being re-energized from the local terminal, pickup of an overreaching zone 2 or excessive phase current within eight power cycles after the autorecloser issues a close command results in the LINE PICKUP RCL TRIP FlexLogic operand. For security, the overcurrent trip is supervised by an undervoltage condition, which in turn is controlled by the VT FUSE FAIL OP operand with a 10 ms coordination timer. If a trip from distance is not required, then it can be disabled with the **LINE PICKUP DISTANCE TRIP** setting. Configure the LINE PICKUP RCL TRIP operand to perform a trip action if the intent is zone 1 extension.

The zone 1 extension philosophy used here normally operates from an under-reaching zone, and it uses an overreaching distance zone when reclosing the line with the other line end open. The **AR ACCELERATE** setting is provided to achieve zone 1 extension functionality if external autoreclosure is employed. Another zone 1 extension approach is to apply permanently an overreaching zone, and reduce the reach when reclosing. This philosophy can be programmed via the autoreclose scheme.

LINE PICKUP FUNCTION — This setting enables and disables the line pickup feature.

LINE PICKUP SIGNAL SOURCE — Selects the signal source for line pickup protection.

PHASE IOC LINE PICKUP — Specifies the level of line current required to declare a line pickup operation when the line is re-energized.

LINE END OPEN PICKUP DELAY — Specifies the time during which the line is de-energized before the line pickup logic is armed.

LINE END OPEN RESET DELAY — Specifies the time during which the line pickup logic remains armed once the line has been re-energized.

AR CO-ORD BYPASS — The coordination timer allows the overcurrent detector to be set below the expected load current seen after reclose. When this setting is enabled (the default value), the coordination timer is bypassed. Disable this setting (removing the bypass and inserting the timer) if high speed autoreclosure is employed.

AR CO-ORD PICKUP DELAY — If the setting of the overcurrent detector is less than the load current, then it picks up during a normal re-energization of the line. This setting delays the assertion of the LINE PICKUP OP operand, allowing the recovery of the line voltage to block the scheme.

AR CO-ORD RESET DELAY — This setting extends the assertion of the line pickup output when autoreclose coordination is not bypassed.

TERMINAL OPEN — This setting allows the line pickup element to be armed from a status signal (such as breaker position) rather than from current and voltage. The FlexLogic operand assigned to this setting indicates that the terminal is opened. It can be derived by combining the status of several devices in a FlexLogic equation.

AR ACCELERATE — This setting provides zone 1 extension functionality if external autoreclosure is employed.

LINE PICKUP BLOCK — Assertion of the FlexLogic operand assigned to this setting blocks operation of the line pickup element.

LINE PICKUP EVENTS — This setting enables and disables the logging of line pickup events in the sequence of events recorder.

Figure 5-111: Line pickup logic

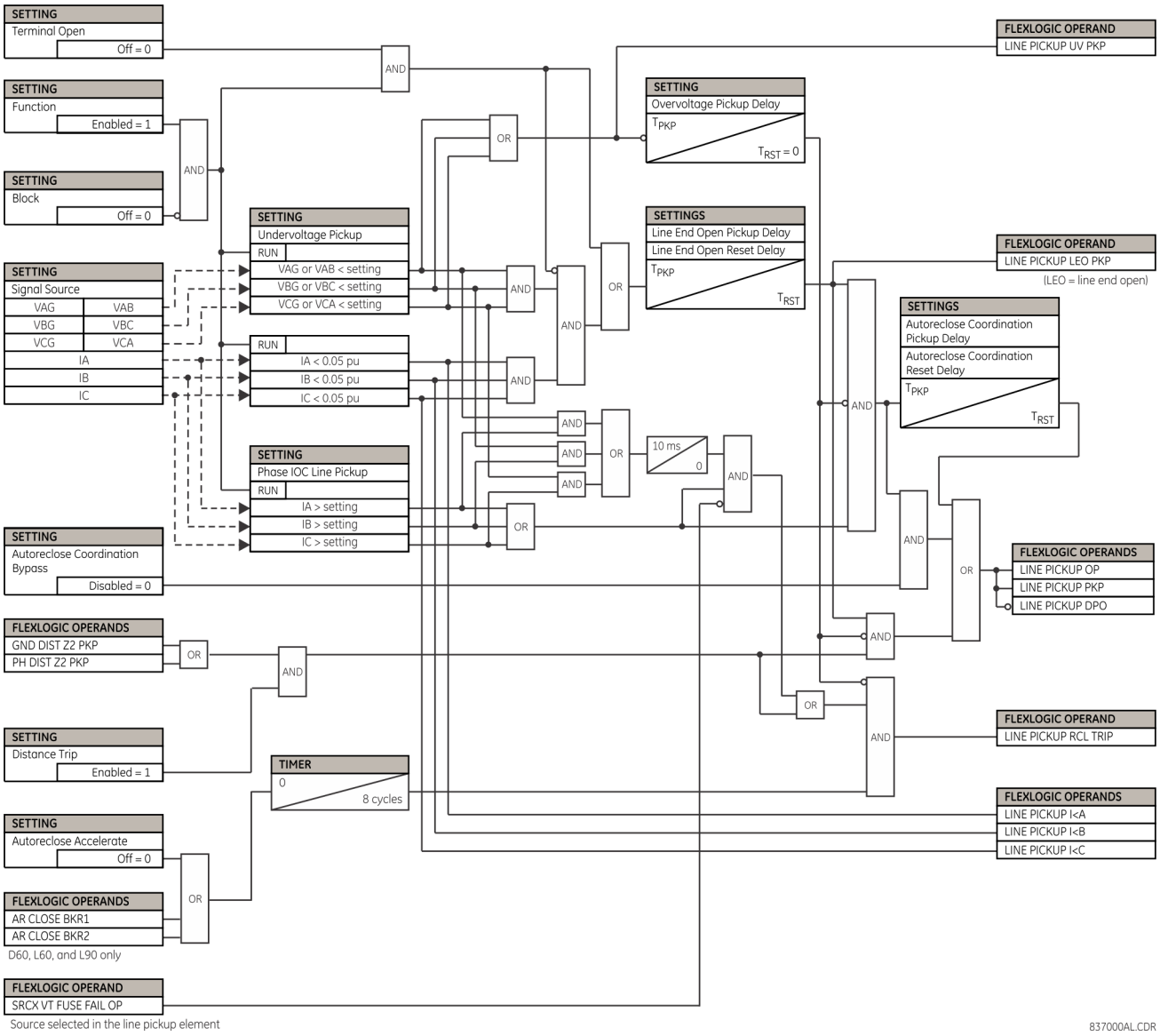

5.7.5 Distance

5.7.5.1 Menu

SETTINGS ⇨⇩ GROUPED ELEMENTS ⇨ SETTING GROUP 1(6) ⇨⇩ DISTANCE

■ **DISTANCE** ■	⇔	**DISTANCE SOURCE: SRC 1**	Range: SRC 1, SRC 2, SRC 3, SRC 4
	⇕	**MEMORY DURATION: 10 cycles**	Range: 5 to 25 cycles in steps of 1
	⇕	**FORCE SELF-POLAR: Off**	Range: FlexLogic operand
	⇕	**FORCE MEM-POLAR: Off**	Range: FlexLogic operand

⇕	**FAST DISTANCE: Enabled**	Range: Disabled, Enabled
⇕	**PH DIST PH SELECT SUPV: Enabled**	Range: Disabled, Enabled
⇕	■ **PHASE DISTANCE Z1** ■	See page 5-227
	⇩	
⇕	■ **PHASE DISTANCE Z5** ■	
⇕	■ **GROUND DISTANCE Z1** ■	See page 5-237
	⇩	
⇧	■ **GROUND DISTANCE Z5** ■	

The following common settings are available for distance protection.

The **DISTANCE SOURCE** identifies the signal source for all distance functions. The mho distance functions use a dynamic characteristic; the positive-sequence voltage—either memorized or actual—is used as a polarizing signal. The memory voltage is also used by the built-in directional supervising functions applied for both the mho and quad characteristics.

The **MEMORY DURATION** setting specifies the length of time that a memorized positive-sequence voltage is used in the distance calculations. After this interval expires, the relay checks the magnitude of the actual positive-sequence voltage. If it is higher than 10% of the nominal, the actual voltage is used, and if lower the memory voltage continues to be used.

The memory is established when the positive-sequence voltage stays above 80% of its nominal value for five power system cycles. For this reason, it is important to ensure that the nominal secondary voltage of the VT is entered correctly under the **SETTINGS ⇨⇩ SYSTEM SETUP ⇨ AC INPUTS ⇨⇩ VOLTAGE BANK** menu.

Set **MEMORY DURATION** long enough to ensure stability on close-in reverse three-phase faults. For this purpose, consider the maximum fault clearing time (breaker fail time) in the substation. On the other hand, the **MEMORY DURATION** cannot be too long as the power system can experience power swing conditions rotating the voltage and current phasors slowly while the memory voltage is static, as frozen at the beginning of the fault. Keeping the memory in effect for too long can eventually lead to incorrect operation of the distance functions.

The distance zones can be forced to become self-polarized through the **FORCE SELF-POLAR** setting. Any user-selected condition (any FlexLogic operand) can be configured to force self-polarization. When the selected operand is asserted (logic 1), the distance functions become self-polarized regardless of other memory voltage logic conditions. When the selected operand is de-asserted (logic 0), the distance functions follow other conditions of the memory voltage logic as shown in the following logic diagram.

The distance zones can be forced to become memory-polarized through the **FORCE MEM-POLAR** setting. Any user-selected condition (any FlexLogic operand) can be configured to force memory polarization. When the selected operand is asserted (logic 1), the distance functions become memory-polarized regardless of the positive-sequence voltage magnitude at this time. When the selected operand is de-asserted (logic 0), the distance functions follow other conditions of the memory voltage logic.

Never let the **FORCE SELF-POLAR** and **FORCE MEM-POLAR** settings to be asserted simultaneously. If this happens, the logic gives higher priority to forcing self-polarization as indicated in the logic diagram. This is consistent with the overall philosophy of distance memory polarization.

NOTE

The memory polarization cannot be applied permanently but for a limited time only. The self-polarization can be applied permanently and therefore takes higher priority.

FAST DISTANCE enables the fast distance algorithm in phase and ground zone 1 and zone 2. Disable fast distance for distance protection applications on a series compensated line.

PH DIST PH SELECT SUPV enables phase selection supervision on phase distance zone 1 to zone 3.

NOTE

The distance zones of the L90 are identical to that of the D60 Line Distance Relay.

Figure 5-112: Memory voltage logic

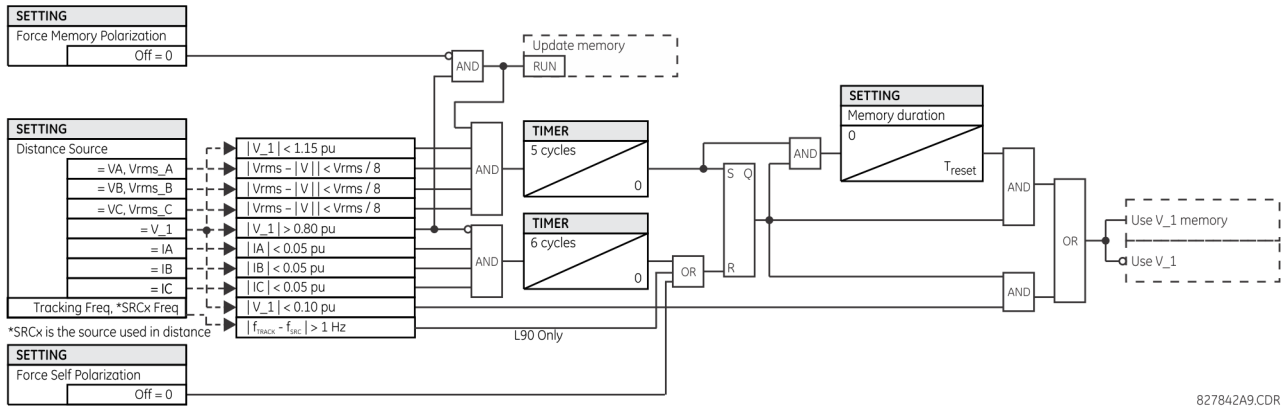

The figure shows a condition for the L90 only that forces distance to be self-polarized to assure correct distance operation when L90 relays are synchronizing to each other.

5.7.5.2 Phase distance (ANSI 21P, IEC PDIS)

SETTINGS ⇨⇩ GROUPED ELEMENTS ⇨ SETTING GROUP 1(6) ⇨⇩ DISTANCE ⇨⇩ PHASE DISTANCE Z1(Z5)

■ **PHASE DISTANCE Z1** ■	⇔	**PHS DIST Z1 FUNCTION: Disabled**	Range: Disabled, Enabled
	⇩	**PHS DIST Z1 DIR: Forward**	Range: Forward, Reverse, Non-directional
	⇩	**PHS DIST Z1 SHAPE: Mho**	Range: Mho, Quad
	⇩	**PHS DIST Z1 XFMR VOL CONNECTION: None**	Range: None, Dy1, Dy3, Dy5, Dy7, Dy9, Dy11, Yd1, Yd3, Yd5, Yd7, Yd9, Yd11
	⇩	**PHS DIST Z1 XFMR CUR CONNECTION: None**	Range: None, Dy1, Dy3, Dy5, Dy7, Dy9, Dy11, Yd1, Yd3, Yd5, Yd7, Yd9, Yd11
	⇩	**PHS DIST Z1 REACH: 2.00 Ω**	Range: 0.02 to 500.00 ohms in steps of 0.01
	⇩	**PHS DIST Z1 RCA: 85°**	Range: 30 to 90° in steps of 1
	⇩	**PHS DIST Z1 REV REACH: 2.00 Ω**	Range: 0.02 to 500.00 ohms in steps of 0.01
	⇩	**PHS DIST Z1 REV REACH RCA: 85°**	Range: 30 to 90° in steps of 1
	⇩	**PHS DIST Z1 COMP LIMIT: 90°**	Range: 30 to 90° in steps of 1
	⇩	**PHS DIST Z1 DIR RCA: 85°**	Range: 30 to 90° in steps of 1
	⇩	**PHS DIST Z1 DIR COMP LIMIT: 90°**	Range: 30 to 90° in steps of 1
	⇩	**PHS DIST Z1 QUAD RGT BLD: 10.00 Ω**	Range: 0.02 to 500.00 ohms in steps of 0.01

⇕	**PHS DIST Z1 QUAD RGT BLD RCA: 85°**	Range: 60 to 90° in steps of 1
⇕	**PHS DIST Z1 QUAD LFT BLD: 10.00 Ω**	Range: 0.02 to 500.00 ohms in steps of 0.01
⇕	**PHS DIST Z1 QUAD LFT BLD RCA: 85°**	Range: 60 to 90° in steps of 1
⇕	**PHS DIST Z1 SUPV: 0.200 pu**	Range: 0.050 to 30.000 pu in steps of 0.001
⇕	**PHS DIST Z1 VOLT LEVEL: 0.000 pu**	Range: 0.000 to 5.000 pu in steps of 0.001
⇕	**PHS DIST Z1 DELAY: 0.000 s**	Range: 0.000 to 65.535 s in steps of 0.001
⇕	**PHS DIST Z1 BLK: Off**	Range: FlexLogic operand
⇕	**PHS DIST Z1 TARGET: Self-reset**	Range: Self-reset, Latched, Disabled
⇧	**PHS DIST Z1 EVENTS: Disabled**	Range: Disabled, Enabled

The phase mho distance function uses a dynamic 100% memory-polarized mho characteristic with additional reactance, directional, and overcurrent supervising characteristics. When set to "Non-directional," the mho function becomes an offset mho with the reverse reach controlled independently from the forward reach, and all the directional characteristics removed.

The phase quadrilateral distance function has a reactance characteristic, right and left blinders, and 100% memory-polarized directional and current supervising characteristics. When set to "Non-directional," the quadrilateral function applies a reactance line in the reverse direction instead of the directional comparators.

Each phase distance zone is configured individually through its own setting menu. All of the settings can be independently modified for each of the zones except:

- The **SIGNAL SOURCE** setting (common for the distance elements of all zones as entered under **SETTINGS ⇨⇩ GROUPED ELEMENTS ⇨ SETTING GROUP 1(6) ⇨⇩ DISTANCE**)
- The **MEMORY DURATION** setting (common for the distance elements of all zones as entered under **SETTINGS ⇨⇩ GROUPED ELEMENTS ⇨ SETTING GROUP 1(6) ⇨⇩ DISTANCE**)

The common distance settings described earlier must be chosen properly for correct operation of the phase distance elements.

Although all zones can be used as either instantaneous elements (pickup [PKP] and dropout [DPO] FlexLogic operands) or time-delayed elements (operate [OP] FlexLogic operands), only zone 1 is intended for the instantaneous under-reaching tripping mode.

NOTICE Ensure that the Phase VT Secondary Voltage setting (see the **SETTINGS ⇨⇩ SYSTEM SETUP ⇨ AC INPUTS ⇨⇩ VOLTAGE BANK** menu) is set correctly to prevent improper operation of associated memory action.

PHS DIST Z1 DIR — All phase distance zones are reversible. The forward direction is defined by the **PHS DIST Z1 RCA** setting, whereas the reverse direction is shifted 180° from that angle. The non-directional zone spans between the forward reach impedance defined by the **PHS DIST Z1 REACH** and **PHS DIST Z1 RCA** settings, and the reverse reach impedance defined by **PHS DIST Z1 REV REACH** and **PHS DIST Z1 REV REACH RCA** as illustrated in the following figures.

PHS DIST Z1 SHAPE — This setting selects the shape of the phase distance function between the mho and quadrilateral characteristics. The selection is available on a per-zone basis. The two characteristics and their possible variations are shown in the following figures.

Figure 5-113: Directional mho phase distance characteristic

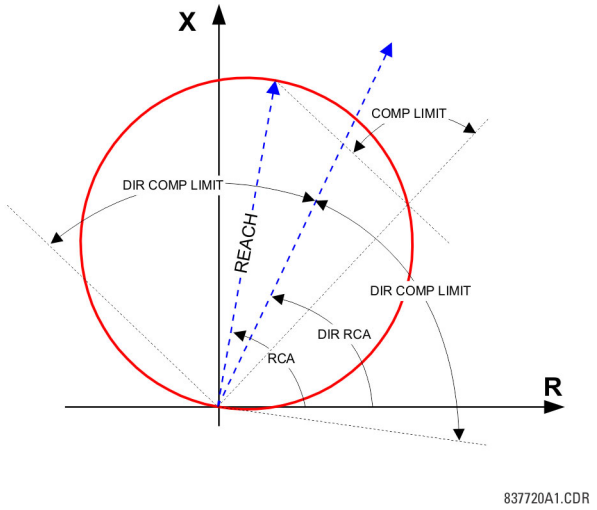

Figure 5-114: Non-directional mho phase distance characteristic

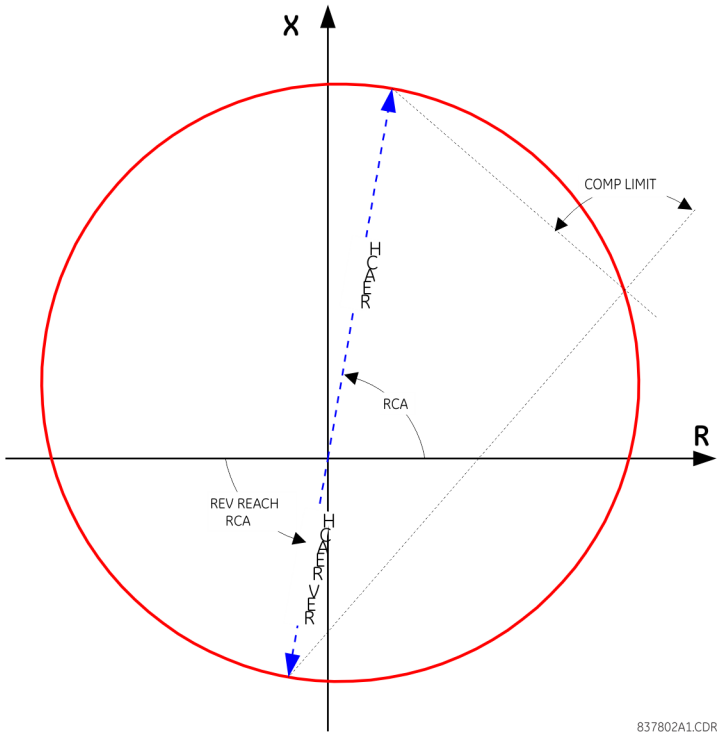

Figure 5-115: Directional quadrilateral phase distance characteristic

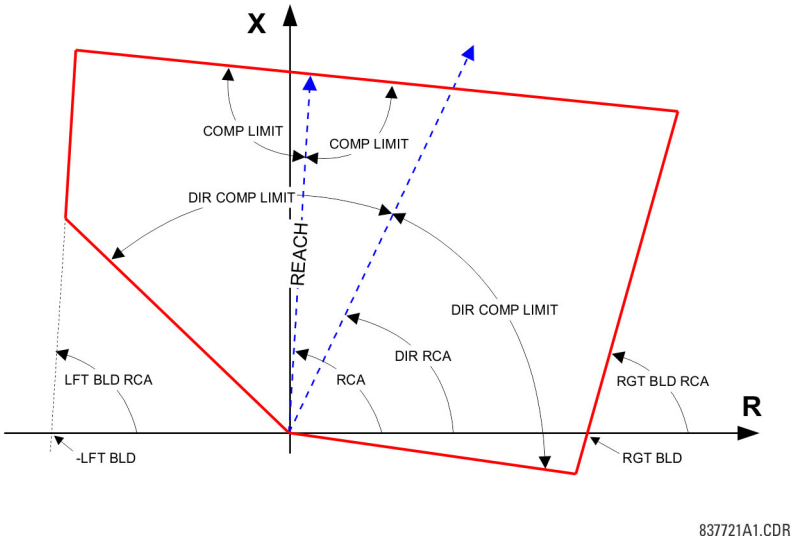

Figure 5-116: Non-directional quadrilateral phase distance characteristic

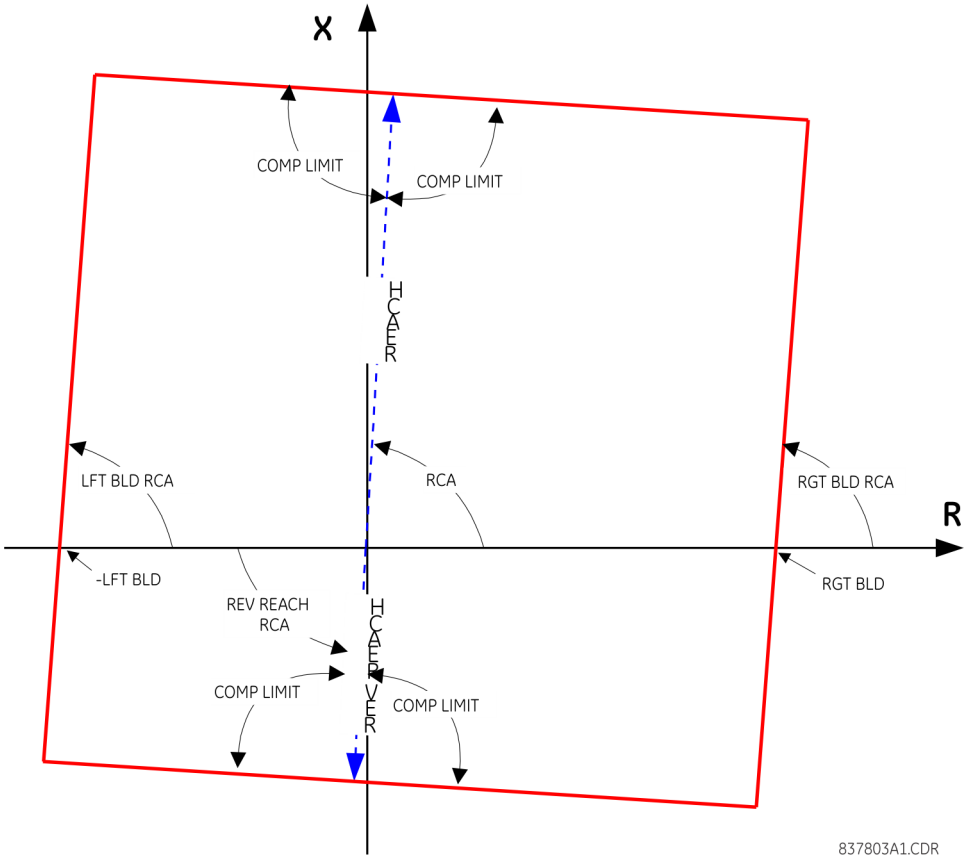

Figure 5-117: Mho distance characteristic sample shapes

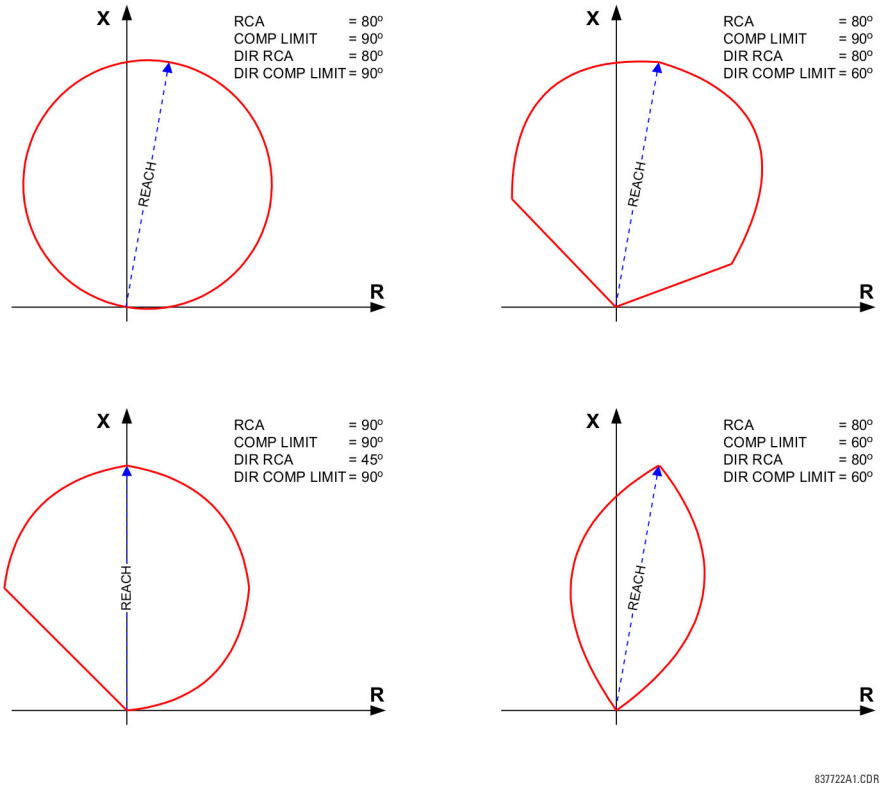

Figure 5-118: Quadrilateral distance characteristic sample shapes

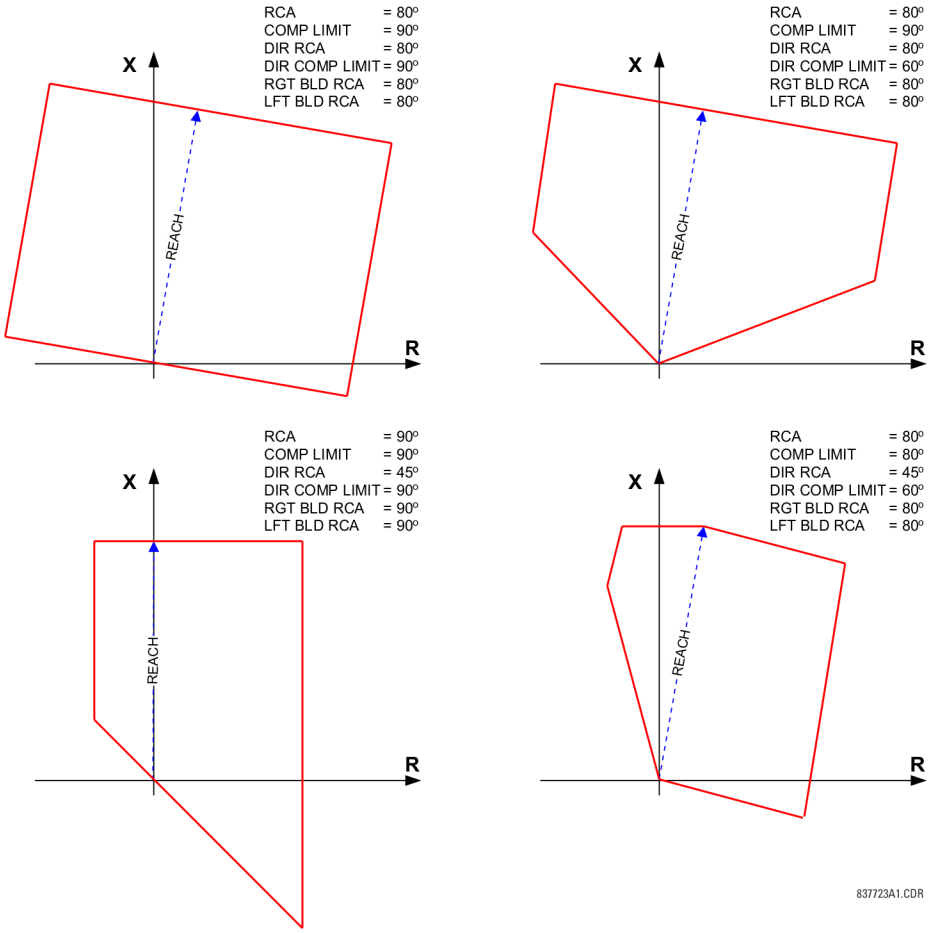

PHS DIST Z1 XFMR VOL CONNECTION — The phase distance elements can be applied to look through a three-phase delta-wye or wye-delta power transformer. In addition, VTs and CTs can be located independently from one another at different windings of the transformer. If the potential source is located at the correct side of the transformer, set this setting to "None."

This setting specifies the location of the voltage source with respect to the involved power transformer in the direction of the zone. The following figure illustrates the usage of this setting. In section (a), zone 1 is looking through a transformer from the delta into the wye winding. Therefore, the Z1 setting is set to "Dy11." In section (b), Zone 3 is looking through a transformer from the wye into the delta winding. Therefore, the Z3 setting is set to "Yd1." The zone is restricted by the potential point (location of the VTs) as illustrated in (e).

PHS DIST Z1 XFMR CUR CONNECTION — This setting specifies the location of the current source with respect to the involved power transformer in the direction of the zone. In section (a) of the following figure, zone 1 is looking through a transformer from the delta into the wye winding. Therefore, the Z1 setting is set to "Dy11." In section (b), the CTs are located at the same side as the read point. Therefore, the Z3 setting is set to "None."

See the Application of Settings chapter for information on calculating distance reach settings in applications involving power transformers.

Figure 5-119: Applications of the PH DIST XFMR VOL/CUR CONNECTION settings

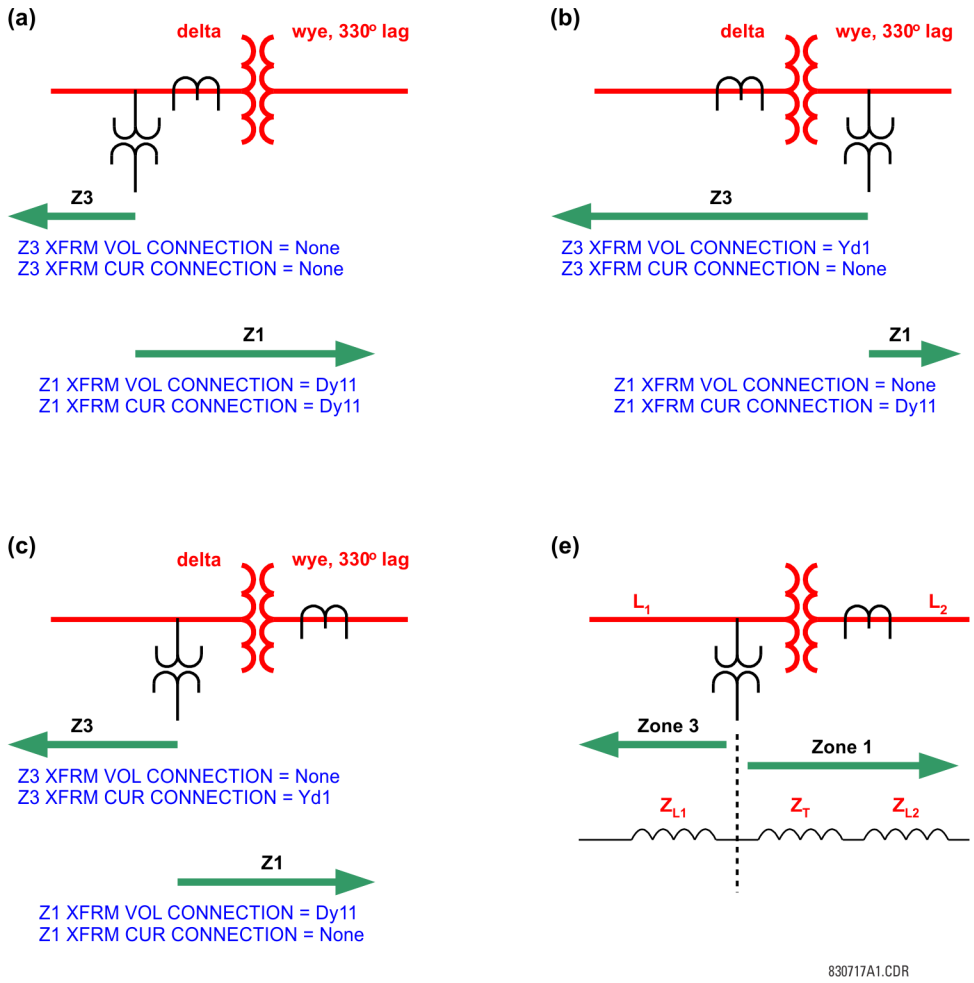

PHS DIST Z1 REACH — This setting defines the zone reach for the forward and reverse applications. In the non-directional applications, this setting defines the forward reach of the zone. The reverse reach impedance in non-directional applications is set independently. The reach impedance is entered in secondary ohms. The reach impedance angle is entered as the **PHS DIST Z1 RCA** setting.

To achieve specified operating speed of distance elements, the relay internally calculates source to line impedance ratio (SIR) from fault phasors. In these calculations, line impedance is estimated based on the zone 1 reach setting. Therefore, in order to calculate the SIR value properly and to maintain the optimal operating speed of the distance elements, set zone 1 reach with a regular 80 to 85% of the line impedance reach setting, even when zone 1 is disabled.

PHS DIST Z1 RCA — This setting specifies the characteristic angle (similar to the "maximum torque angle" in previous technologies) of the phase distance characteristic for the forward and reverse applications. In the non-directional applications, this setting defines the angle of the forward reach impedance. The reverse reach impedance in the non-directional applications is set independently. The setting is an angle of reach impedance as shown in the distance characteristic figures earlier. This setting is independent from **PHS DIST Z1 DIR RCA**, the characteristic angle of an extra directional supervising function.

PHS DIST Z1 REV REACH — This setting defines the reverse reach of the non-directional zone (**PHS DIST Z1 DIR** setting). The value must be entered in secondary ohms. This setting does not apply when the zone direction is set to "Forward" or "Reverse."

PHS DIST Z1 REV REACH RCA — This setting defines the angle of the reverse reach impedance of the non-directional zone (**PHS DIST Z1 DIR** setting). This setting does not apply when the zone direction is set to "Forward" or "Reverse."

PHS DIST Z1 COMP LIMIT — This setting specifies the shape the operating characteristic. In particular, it produces the lens-type characteristic of the mho function and a tent-shaped characteristic of the reactance boundary of the quadrilateral function. If the mho shape is selected, the same limit angle applies to both the mho and supervising reactance comparators. In conjunction with the mho shape selection, the setting improves loadability of the protected line. In conjunction with the quadrilateral characteristic, this setting improves security for faults close to the reach point by adjusting the reactance boundary into a tent-shape.

PHS DIST Z1 DIR RCA — This setting selects the characteristic angle (or maximum torque angle) of the directional supervising function. If the mho shape is applied, the directional function is an extra supervising function as the dynamic mho characteristic is itself directional. In conjunction with the quadrilateral shape, this setting defines the only directional function built into the phase distance element. The directional function uses the memory voltage for polarization. This setting typically equals the distance characteristic angle **PHS DIST Z1 RCA**.

PHS DIST Z1 DIR COMP LIMIT — Selects the comparator limit angle for the directional supervising function.

PHS DIST Z1 QUAD RGT BLD — This setting defines the right blinder position of the quadrilateral characteristic along the resistive axis of the impedance plane (see the Quadrilateral Phase Distance Characteristic figures). The angular position of the blinder is adjustable with the use of the **PHS DIST Z1 QUAD RGT BLD RCA** setting. This setting applies only to the quadrilateral characteristic and is set giving consideration to the maximum load current and required resistive coverage.

PHS DIST Z1 QUAD RGT BLD RCA — This setting defines the angular position of the right blinder of the quadrilateral characteristic (see the Quadrilateral Distance Characteristic figures).

PHS DIST Z1 QUAD LFT BLD — This setting defines the left blinder position of the quadrilateral characteristic along the resistive axis of the impedance plane (see the Quadrilateral Distance Characteristic figures). The angular position of the blinder is adjustable with the use of the **PHS DIST Z1 QUAD LFT BLD RCA** setting. This setting applies only to the quadrilateral characteristic and is set with consideration to the maximum load current.

PHS DIST Z1 QUAD LFT BLD RCA — This setting defines the angular position of the left blinder of the quadrilateral characteristic (see the Quadrilateral Distance Characteristic figures).

PHS DIST Z1 SUPV — The phase distance elements are supervised by the magnitude of the line-to-line current (fault loop current used for the distance calculations). For convenience, $\sqrt{3}$ is accommodated by the pickup (that is, before being used, the entered value of the threshold setting is multiplied by $\sqrt{3}$).

If the minimum fault current level is sufficient, set the current supervision pickup above maximum full load current preventing maloperation under VT fuse fail conditions. This requirement can be difficult to meet for remote faults at the end of zones 2 and above. If this is the case, set the current supervision pickup below the full load current, but this can result in maloperation during fuse fail conditions.

PHS DIST Z1 VOLT LEVEL — This setting is relevant for applications on series-compensated lines, or in general, if series capacitors are located between the relaying point and a point where the zone does not overreach. For plain (non-compensated) lines, set to zero. Otherwise, the setting is entered in per unit of the phase VT bank configured under the **DISTANCE SOURCE**. Effectively, this setting facilitates dynamic current-based reach reduction. In non-directional applications (**PHS DIST Z1 DIR** set to "Non-directional"), this setting applies only to the forward reach of the non-directional zone. See the Application of Settings chapter for information on calculating this setting for series compensated lines.

PHS DIST Z1 DELAY — This setting allows the user to delay operation of the distance elements and implement stepped distance protection. The distance element timers for zones 2 and higher apply a short dropout delay to cope with faults located close to the zone boundary when small oscillations in the voltages or currents can inadvertently reset the timer. Zone 1 does not need any drop-out delay since it is sealed-in by the presence of current.

PHS DIST Z1 BLK — This setting enables the user to select a FlexLogic operand to block a given distance element. VT fuse fail detection is one of the applications for this setting.

Figure 5-120: Phase distance zone 1 OP logic

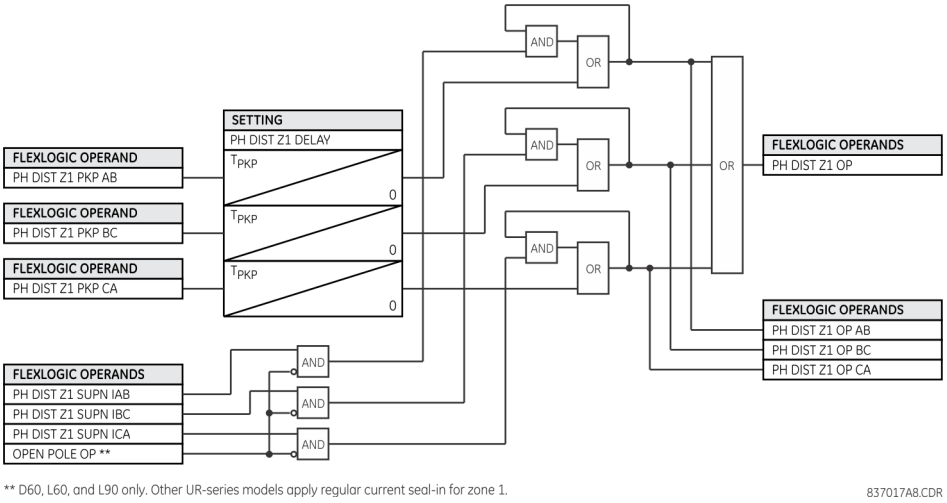

Figure 5-121: Phase distance zone 2 OP logic

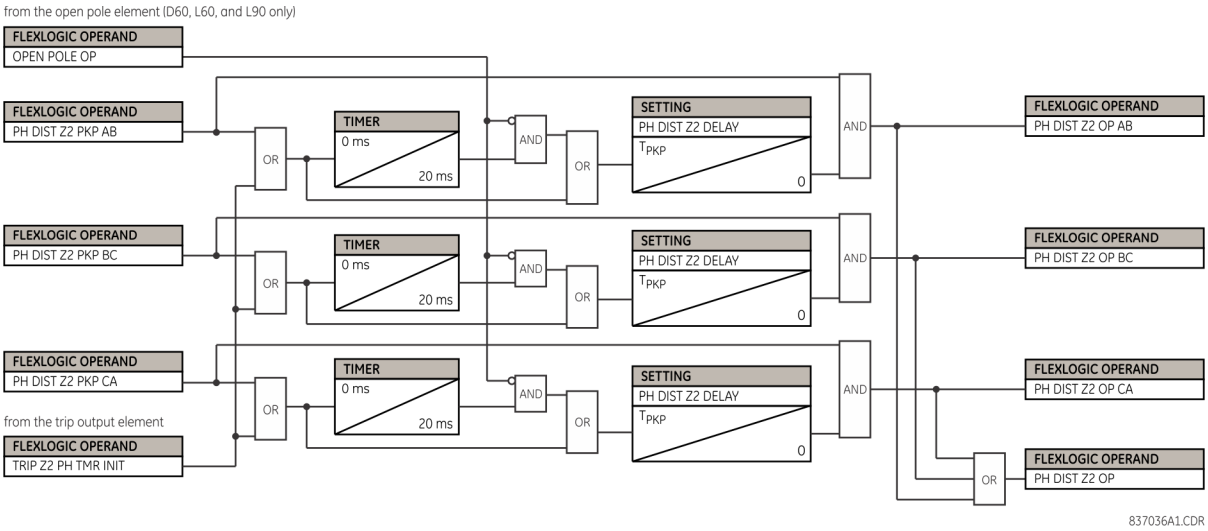

NOTE

For phase distance zone 2, there is a provision to start the zone timer with other distance zones or loop the pickup flag to avoid prolonging phase distance zone 2 operation when the fault evolves from one type to another or migrates from the initial zone to zone 2. Assign the required zones in the trip output function to accomplish this functionality.

Figure 5-122: Phase distance zones 3 and higher OP logic

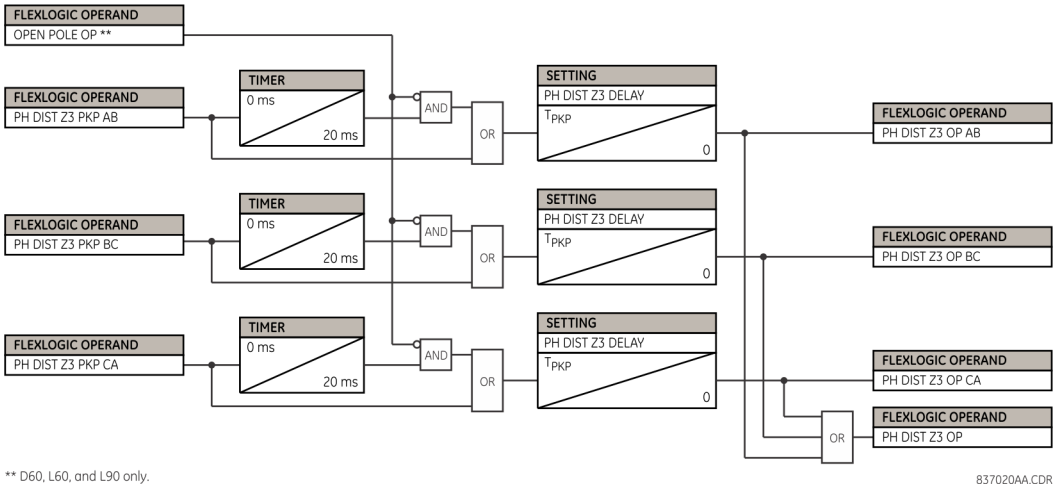

Figure 5-123: Phase distance logic

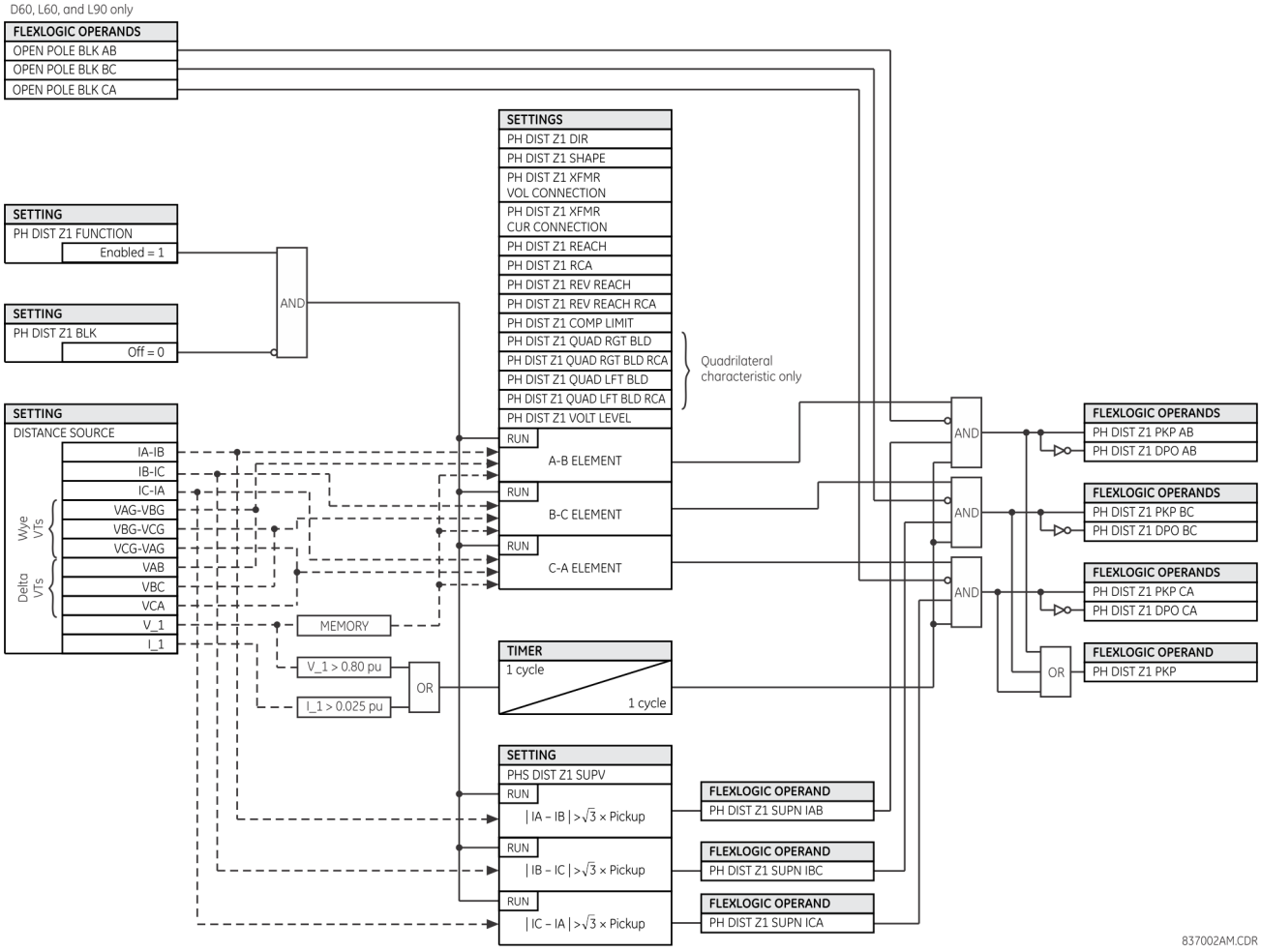

5.7.5.3 Ground distance (ANSI 21G, IEC PDIS)

SETTINGS ⇨⇩ GROUPED ELEMENTS ⇨ SETTING GROUP 1(6) ⇨⇩ DISTANCE ⇨⇩ GROUND DISTANCE Z1(Z5)

■ GROUND DISTANCE Z1 ■	⇔	GND DIST Z1 FUNCTION: Disabled	Range: Disabled, Enabled
	⇩	GND DIST Z1 DIR: Forward	Range: Forward, Reverse, Non-directional
	⇩	GND DIST Z1 SHAPE: Mho	Range: Mho, Quad
	⇩	GND DIST Z1 Z0/Z1 MAG: 2.70	Range: 0.00 to 10.00 in steps of 0.01
	⇩	GND DIST Z1 Z0/Z1 ANG: 0°	Range: –90 to 90° in steps of 1
	⇩	GND DIST Z1 ZOM/Z1 MAG: 0.00	Range: 0.00 to 7.00 in steps of 0.01
	⇩	GND DIST Z1 ZOM/Z1 ANG: 0°	Range: –90 to 90° in steps of 1
	⇩	GND DIST Z1 REACH: 2.00 Ω	Range: 0.02 to 500.00 ohms in steps of 0.01
	⇩	GND DIST Z1 RCA: 85°	Range: 30 to 90° in steps of 1
	⇩	GND DIST Z1 REV REACH: 2.00 Ω	Range: 0.02 to 500.00 ohms in steps of 0.01
	⇩	GND DIST Z1 REV REACH RCA: 85°	Range: 30 to 90° in steps of 1
	⇩	GND DIST Z1 POL CURRENT: Zero-seq	Range: Zero-seq, Neg-seq
	⇩	GND DIST Z1 NON- HOMOGEN ANG: 0.0°	Range: –40.0 to 40.0° in steps of 0.1
	⇩	GND DIST Z1 COMP LIMIT: 90°	Range: 30 to 90° in steps of 1
	⇩	GND DIST Z1 DIR RCA: 85°	Range: 30 to 90° in steps of 1
	⇩	GND DIST Z1 DIR COMP LIMIT: 90°	Range: 30 to 90° in steps of 1
	⇩	GND DIST Z1 QUAD RGT BLD: 10.00 Ω	Range: 0.02 to 500.00 ohms in steps of 0.01
	⇩	GND DIST Z1 QUAD RGT BLD RCA: 85°	Range: 60 to 90° in steps of 1
	⇩	GND DIST Z1 QUAD LFT BLD: 10.00 Ω	Range: 0.02 to 500.00 ohms in steps of 0.01
	⇩	GND DIST Z1 QUAD LFT BLD RCA: 85°	Range: 60 to 90° in steps of 1
	⇩	GND DIST Z1 SUPV: 0.200 pu	Range: 0.050 to 30.000 pu in steps of 0.001
	⇩	GND DIST Z1 VOLT LEVEL: 0.000 pu	Range: 0.000 to 5.000 pu in steps of 0.001
	⇩	GND DIST Z1 DELAY: 0.000 s	Range: 0.000 to 65.535 s in steps of 0.001

⇕	**GND DIST Z1 BLK: Off**	Range: FlexLogic operand
⇕	**GND DIST Z1 TARGET: Self-reset**	Range: Self-reset, Latched, Disabled
⇧	**GND DIST Z1 EVENTS: Disabled**	Range: Disabled, Enabled

The ground mho distance function uses a dynamic 100% memory-polarized mho characteristic with additional reactance, directional, current, and phase selection supervising characteristics. The ground quadrilateral distance function is composed of a reactance characteristic, right and left blinders, and 100% memory-polarized directional, overcurrent, and phase selection supervising characteristics.

When set to non-directional, the mho function becomes an offset mho with the reverse reach controlled independently from the forward reach, and all the directional characteristics removed. When set to non-directional, the quadrilateral function applies a reactance line in the reverse direction instead of the directional comparators.

The reactance supervision for the mho function uses the zero-sequence current for polarization. The reactance line of the quadrilateral function uses either zero-sequence or negative-sequence current as a polarizing quantity. The selection is controlled by a user setting and depends on the degree of non-homogeneity of the zero-sequence and negative-sequence equivalent networks.

The directional supervision uses memory voltage as polarizing quantity and both zero- and negative-sequence currents as operating quantities.

The phase selection supervision restrains the ground elements during double-line-to-ground faults as they, by the principles of distance relaying, can be inaccurate in such conditions. Ground distance zones 1 and higher apply additional zero-sequence directional supervision.

5

Each ground distance zone is configured individually through its own setting menu. All of the settings can be modified independently for each of the zones except:

- The **SIGNAL SOURCE** setting (common for both phase and ground elements for all zones as entered under the **SETTINGS ⇨⇩ GROUPED ELEMENTS ⇨ SETTING GROUP 1(6) ⇨⇩ DISTANCE** menu)
- The **MEMORY DURATION** setting (common for both phase and ground elements for all zones as entered under the **SETTINGS ⇨⇩ GROUPED ELEMENTS ⇨ SETTING GROUP 1(6) ⇨⇩ DISTANCE** menu)

The common distance settings noted at the start of this section must be properly chosen for correct operation of the ground distance elements.

Although all ground distance zones can be used as either instantaneous elements (pickup [PKP] and dropout [DPO] FlexLogic signals) or time-delayed elements (operate [OP] FlexLogic signals), only zone 1 is intended for the instantaneous under-reaching tripping mode.

NOTE

Ensure that the **PHASE VT SECONDARY VOLTAGE** (see the **SETTINGS ⇨⇩ SYSTEM SETUP ⇨ AC INPUTS ⇨⇩ VOLTAGE BANK** menu) is set correctly to prevent improper operation of associated memory action.

GND DIST Z1 DIR — All ground distance zones are reversible. The forward direction is defined by the **GND DIST Z1 RCA** setting and the reverse direction is shifted by 180° from that angle. The non-directional zone spans between the forward reach impedance defined by the **GND DIST Z1 REACH** and **GND DIST Z1 RCA** settings, and the reverse reach impedance defined by the **GND DIST Z1 REV REACH** and **GND DIST Z1 REV REACH RCA** settings.

GND DIST Z1 SHAPE — This setting selects the shape of the ground distance characteristic between the mho and quadrilateral characteristics. The selection is available on a per-zone basis.

The figures show the directional and non-directional quadrilateral ground distance characteristics. The directional and non-directional mho ground distance characteristics are the same as those shown for the phase distance element in the previous section.

Figure 5-124: Directional quadrilateral ground distance characteristic

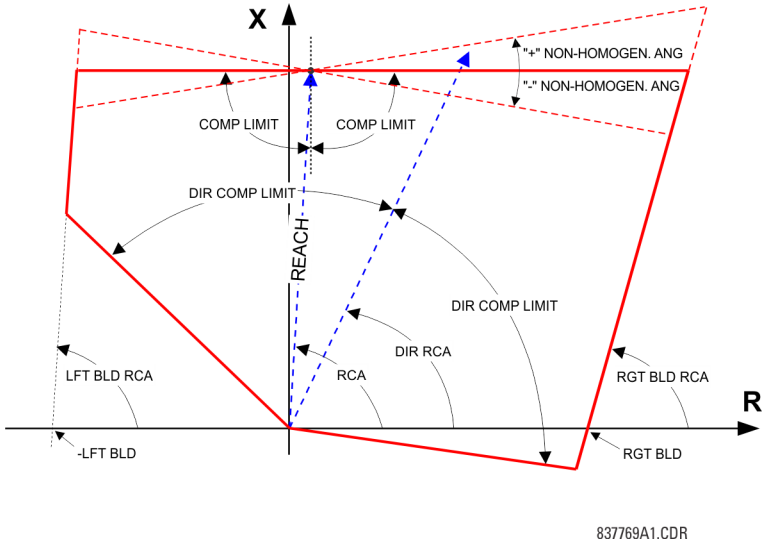

Figure 5-125: Non-directional quadrilateral ground distance characteristic

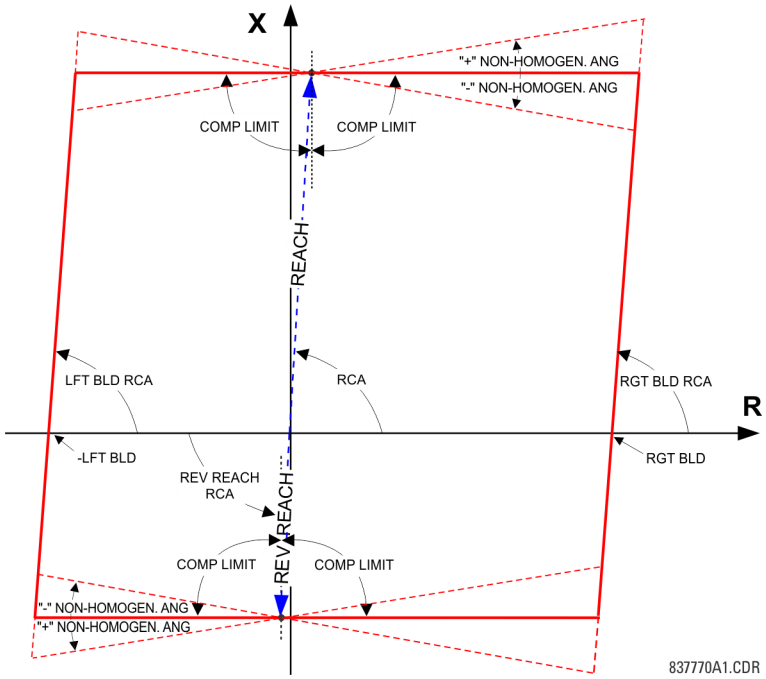

GND DIST Z1 Z0/Z1 MAG — This setting specifies the ratio between the zero-sequence and positive-sequence impedance required for zero-sequence compensation of the ground distance elements. This setting is available on a per-zone basis, enabling precise settings for tapped, non-homogeneous, and series compensated lines.

GND DIST Z1 Z0/Z1 ANG — This setting specifies the angle difference between the zero-sequence and positive-sequence impedance required for zero-sequence compensation of the ground distance elements. The entered value is the zero-sequence impedance angle minus the positive-sequence impedance angle. This setting is available on a per-zone basis, enabling precise values for tapped, non-homologous, and series compensated lines.

GND DIST Z1 ZOM/Z1 MAG — The ground distance elements can be programmed to apply compensation for the zero-sequence mutual coupling between parallel lines. If this compensation is required, the ground current from the parallel line (3I_0) measured in the direction of the zone being compensated must be connected to the ground input CT of the CT bank

configured under the **DISTANCE SOURCE**. This setting specifies the ratio between the magnitudes of the mutual zero-sequence impedance between the lines and the positive-sequence impedance of the protected line. Set this setting to zero if the compensation is not to be performed. Note that internally the mutual coupling compensation is applied only if 3I_0>1.22*IG to ensure that no mutual coupling compensation is applied when the fault is on the parallel line. Mutual coupling compensation is applied when distance source is assigned with 8F or 8L type DSP module only and when the ratio of the protected line ground current to parallel line ground current is greater than 1.22.

GND DIST Z1 ZOM/Z1 ANG — This setting specifies the angle difference between the mutual zero-sequence impedance between the lines and the positive-sequence impedance of the protected line.

GND DIST Z1 REACH — This setting defines the reach of the zone for the forward and reverse applications. In non-directional applications, this setting defines the forward reach of the zone. The reverse reach impedance in non-directional applications is set independently. The angle of the reach impedance is entered as the **GND DIST Z1 RCA** setting. The reach impedance is entered in secondary ohms.

To achieve specified operating speed of distance elements, the relay internally calculates source to line impedance ratio (SIR) from fault phasors. In these calculations, line impedance is estimated based on the zone 1 reach setting. Therefore, in order to calculate the SIR value properly and to maintain the optimal operating speed of the distance elements, set zone 1 reach with a regular 80 to 85% of the line impedance reach setting, even when zone 1 is disabled.

GND DIST Z1 RCA — This setting specifies the characteristic angle (similar to the maximum torque angle in previous technologies) of the ground distance characteristic for the forward and reverse applications. In the non-directional applications, this setting defines the forward reach of the zone. The reverse reach impedance in the non-directional applications is set independently. This setting is independent from the **GND DIST Z1 DIR RCA** setting (the characteristic angle of an extra directional supervising function).

5

NOTE

The relay internally performs zero-sequence compensation for the protected circuit based on the values entered for **GND DIST Z1 Z0/Z1 MAG** and **GND DIST Z1 Z0/Z1 ANG**, and if configured to do so, zero-sequence compensation for mutual coupling based on the values entered for **GND DIST Z1 Z0M/Z1 MAG** and **GND DIST Z1 Z0M/Z1 ANG**. As such, enter the **GND DIST Z1 REACH** and **GND DIST Z1 RCA** values in terms of positive sequence quantities.

GND DIST Z1 REV REACH — This setting defines the reverse reach of the zone set to non-directional (**GND DIST Z1 DIR** setting). The value must be entered in secondary ohms. This setting does not apply when the zone direction is set to “Forward” or “Reverse.”

GND DIST Z1 REV REACH RCA — This setting defines the angle of the reverse reach impedance if the zone is set to non-directional (**GND DIST Z1 DIR** setting). This setting does not apply when the zone direction is set to “Forward” or “Reverse.”

GND DIST Z1 POL CURRENT — This setting applies only if the **GND DIST Z1 SHAPE** is set to “Quad” and controls the polarizing current used by the reactance comparator of the quadrilateral characteristic. Either the zero-sequence or negative-sequence current can be used. In general, a variety of system conditions must be examined to select an optimum polarizing current. This setting becomes less relevant when the resistive coverage and zone reach are set conservatively. Also, this setting is more relevant in lower voltage applications such as on distribution lines or cables, as compared with high-voltage transmission lines. This setting applies to both the zone 1 and reverse reactance lines if the zone is set to non-directional. See the Application of Settings chapter for additional information.

GND DIST Z1 NON-HOMOGEN ANG — This setting applies only if the **GND DIST Z1 SHAPE** is set to “Quad” and provides a method to correct the angle of the polarizing current of the reactance comparator for non-homogeneity of the zero-sequence or negative-sequence networks. In general, a variety of system conditions must be examined to select this setting. In many applications this angle is used to reduce the reach at high resistances in order to avoid overreaching under far-out reach settings and/or when the sequence networks are greatly non-homogeneous. This setting applies to both the forward and reverse reactance lines if the zone is set to non-directional. See the Application of Settings chapter for additional information.

GND DIST Z1 COMP LIMIT — This setting shapes the operating characteristic. In particular, it enables a lens-shaped characteristic of the mho function and a tent-shaped characteristic of the quadrilateral function reactance boundary. If the mho shape is selected, the same limit angle applies to mho and supervising reactance comparators. In conjunction with the mho shape selection, this setting improves loadability of the protected line. In conjunction with the quadrilateral characteristic, this setting improves security for faults close to the reach point by adjusting the reactance boundary into a tent-shape.

GND DIST Z1 DIR RCA — Selects the characteristic angle (or maximum torque angle) of the directional supervising function. If the mho shape is applied, the directional function is an extra supervising function, as the dynamic mho characteristic itself is a directional one. In conjunction with the quadrilateral shape selection, this setting defines the only directional function built into the ground distance element. The directional function uses memory voltage for polarization.

GND DIST Z1 DIR COMP LIMIT — This setting selects the comparator limit angle for the directional supervising function.

GND DIST Z1 QUAD RGT BLD — This setting defines the right blinder position of the quadrilateral characteristic along the resistive axis of the impedance plane (see the Quadrilateral Distance Characteristic figure). The angular position of the blinder is adjustable with the use of the **GND DIST Z1 QUAD RGT BLD RCA** setting. This setting applies only to the quadrilateral characteristic; set it with consideration to the maximum load current and required resistive coverage.

GND DIST Z1 QUAD RGT BLD RCA — This setting defines the angular position of the right blinder of the quadrilateral characteristic (see the Quadrilateral Distance Characteristic figure).

GND DIST Z1 QUAD LFT BLD — This setting defines the left blinder position of the quadrilateral characteristic along the resistive axis of the impedance plane (see the Quadrilateral Distance Characteristic figure). The angular position of the blinder is adjustable with the use of the **GND DIST Z1 QUAD LFT BLD RCA** setting. This setting applies only to the quadrilateral characteristic; set it with consideration to the maximum load current.

GND DIST Z1 QUAD LFT BLD RCA — This setting defines the angular position of the left blinder of the quadrilateral characteristic (see the Quadrilateral Distance Characteristic figure).

GND DIST Z1 SUPV — The ground distance elements are supervised by the magnitude of the neutral (3I_0) current. Set the current supervision pickup to be less than the minimum 3I_0 current for the end of the zone fault, taking into account the required fault resistance coverage to prevent maloperation due to VT fuse failure. Settings less than 0.2 pu are not recommended, so apply them with caution. To enhance ground distance security against spurious neutral current during switch-off transients, three-phase faults, and phase-to-phase faults, a positive-sequence current restraint of 5% is applied to the neutral current supervision magnitude. Set this setting at least three times the **CURRENT CUTOFF LEVEL** setting specified in the **PRODUCT SETUP ⇨⇩ DISPLAY PROPERTIES** menu.

GND DIST Z1 VOLT LEVEL — This setting is relevant for applications on series-compensated lines, or in general, if series capacitors are located between the relaying point and a point for which the zone shall not overreach. For plain (non-compensated) lines, set it to zero. Otherwise, the setting is entered in per unit of the VT bank configured under the **DISTANCE SOURCE**. Effectively, this setting facilitates dynamic current-based reach reduction. In non-directional applications (**GND DIST Z1 DIR** set to "Non-directional"), this setting applies only to the forward reach of the non-directional zone. See the Application of Settings chapter for details and information on calculating this setting value for applications on series compensated lines.

GND DIST Z1 DELAY — This setting enables the user to delay operation of the distance elements and implement a stepped distance backup protection. The distance element timer applies a short drop-out delay to cope with faults located close to the boundary of the zone when small oscillations in the voltages or currents can inadvertently reset the timer.

GND DIST Z1 BLK — This setting enables the user to select a FlexLogic operand to block the given ground distance element. VT fuse fail detection is one of the applications for this setting.

Figure 5-126: Ground distance zone 1 OP scheme

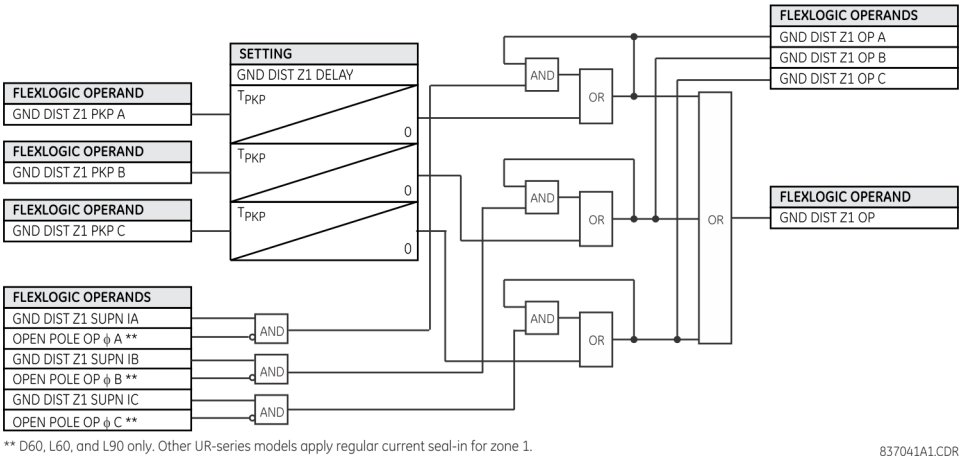

Figure 5-127: Ground distance zone 2 OP scheme

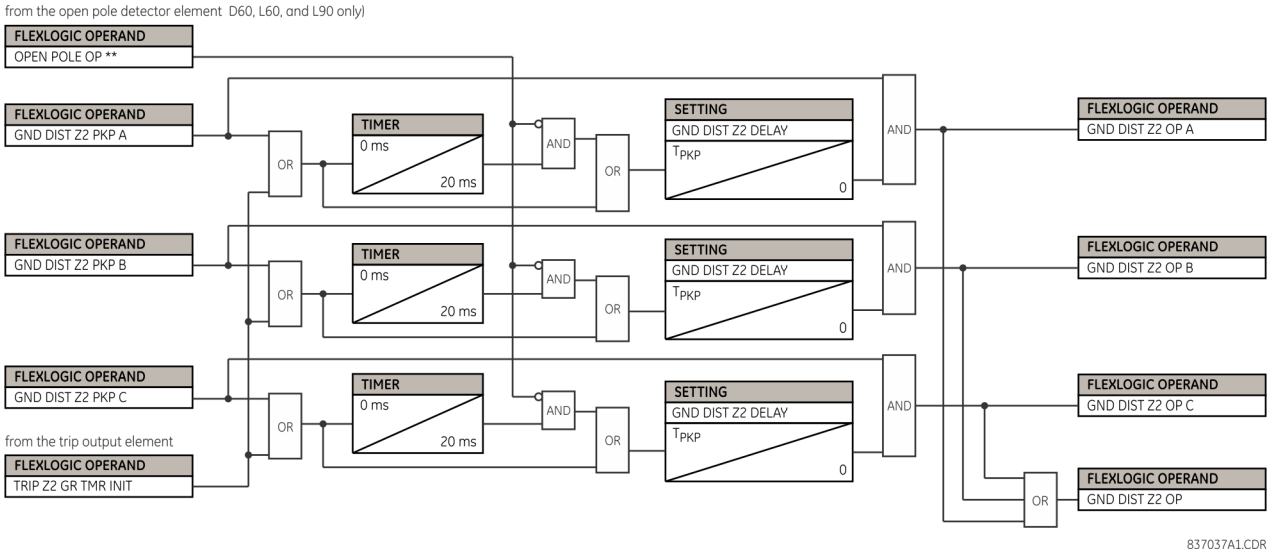

NOTE

For ground distance zone 2, there is a provision to start the zone timer with the other distance zones or loop pickup flags to avoid prolonging ground distance zone 2 operation if the fault evolves from one type to another or migrates from zone 3 or 4 to zone 2. Assign the required zones in the trip output element to accomplish this functionality.

Figure 5-128: Ground distance zones 3 and higher OP scheme

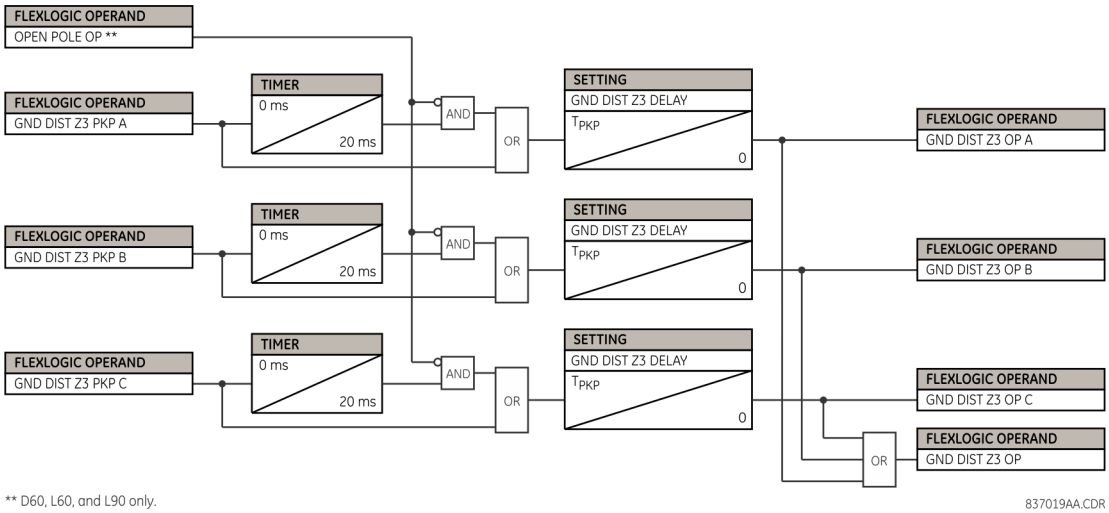

5

Figure 5-129: Ground distance zone 1 pickup logic

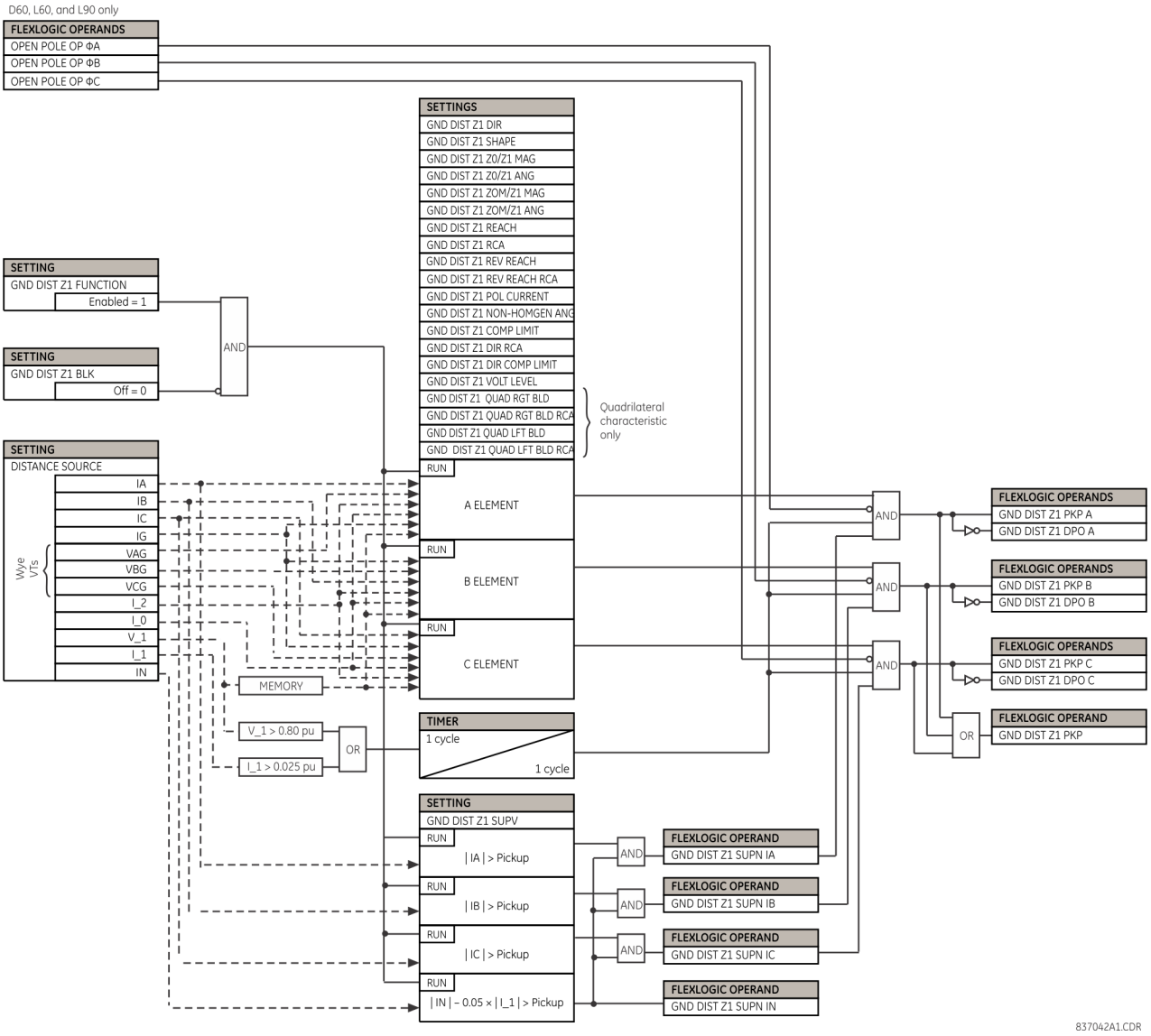

Figure 5-130: Ground distance zones 2 and higher pickup logic

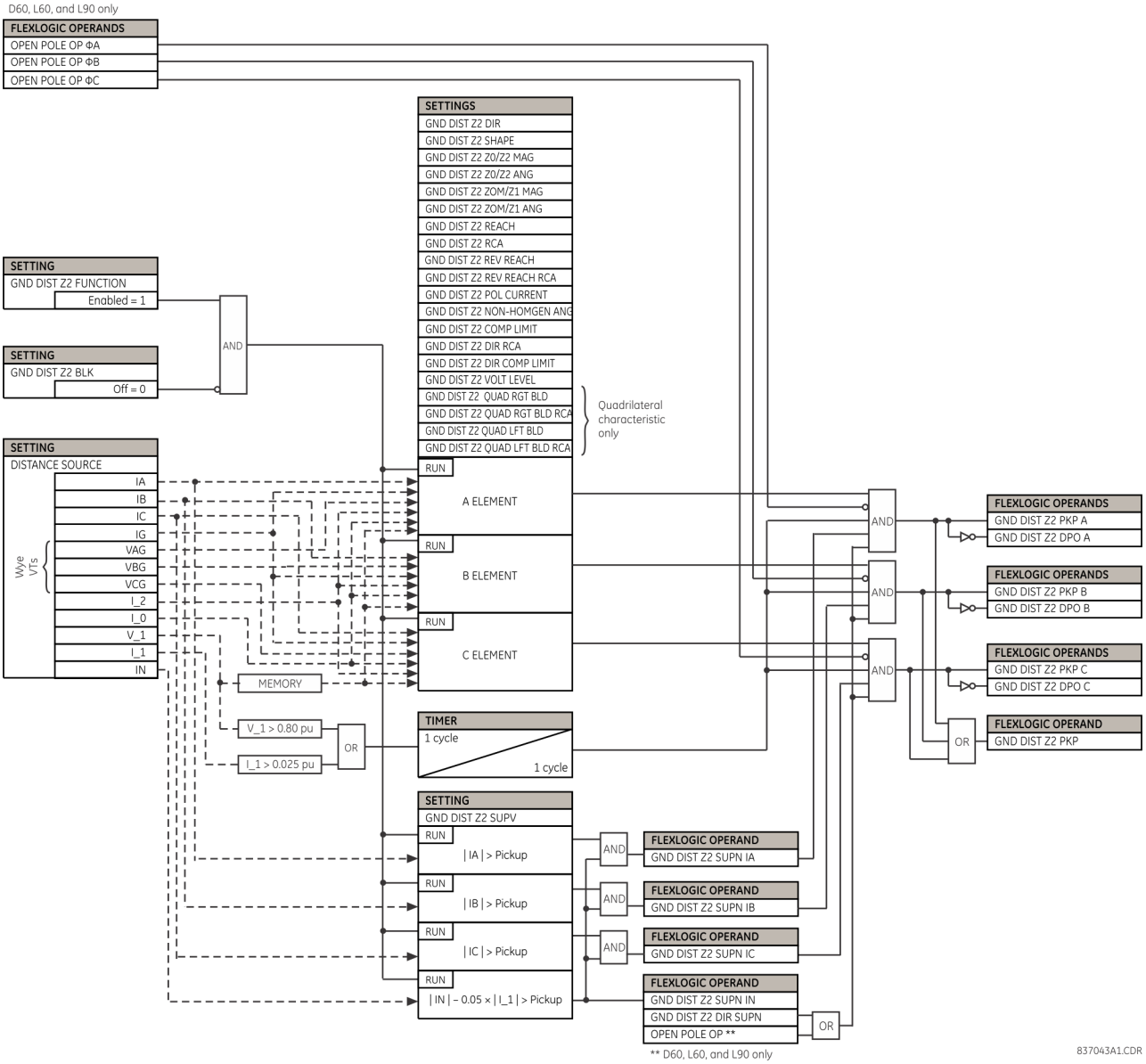

Ground directional supervision

A dual (zero-sequence and negative-sequence) memory-polarized directional supervision applied to the ground distance protection elements has been shown to give good directional integrity. However, a reverse double-line-to-ground fault can lead to bad operation of the ground element in a sound phase if the zone reach setting is increased to cover high resistance faults.

Ground distance zones 2 and higher use an additional ground directional supervision to enhance directional integrity. The element's directional characteristic angle is used as a maximum torque angle together with a 90° limit angle.

The supervision is biased toward operation in order to avoid compromising the sensitivity of ground distance elements at low signal levels. Otherwise, the reverse fault condition that generates concern has high polarizing levels so that a correct reverse fault decision can be reliably made.

Figure 5-131: Ground directional supervision logic

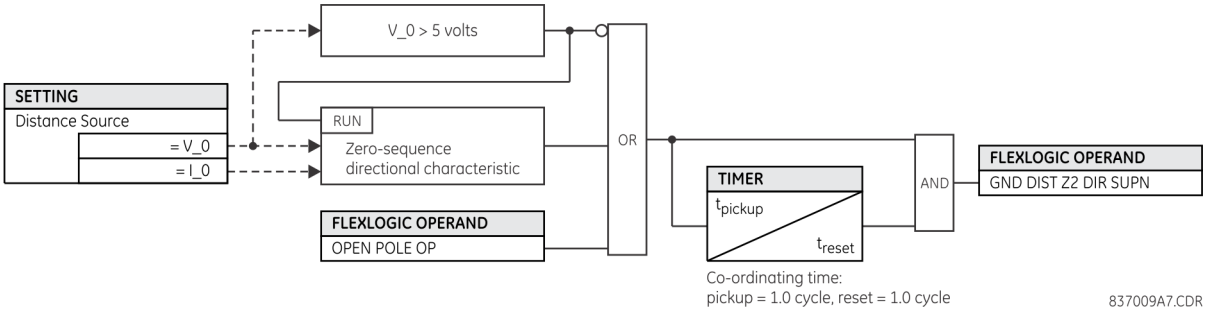

5.7.6 Power swing detect (ANSI 68)

SETTINGS ⇨⇩ GROUPED ELEMENTS ⇨ SETTING GROUP 1(6) ⇨⇩ POWER SWING DETECT

■ POWER SWING ■ DETECT	⇔	**POWER SWING FUNCTION: Disabled**	Range: Disabled, Enabled
	⇕	**POWER SWING SOURCE: SRC 1**	Range: SRC 1, SRC 2, SRC 3, SRC 4
	⇕	**POWER SWING SHAPE: Mho Shape**	Range: Mho Shape, Quad Shape
	⇕	**POWER SWING MODE: Two Step**	Range: Two Step, Three Step
	⇕	**POWER SWING SUPV: 0.600 pu**	Range: 0.050 to 30.000 pu in steps of 0.001
	⇕	**POWER SW I2 SUPV ENAB: Off**	Range: FlexLogic operand
	⇕	**POWER SWING I2 SUPV: 0.200 pu**	Range: 0.050 to 30.000 pu in steps of 0.001
	⇕	**POWER SWING FWD REACH: 50.00 Ω**	Range: 0.10 to 500.00 ohms in steps of 0.01
	⇕	**POWER SWING QUAD FWD REACH MID: 60.00 Ω**	Range: 0.10 to 500.00 ohms in steps of 0.01
	⇕	**POWER SWING QUAD FWD REACH OUT: 70.00 Ω**	Range: 0.10 to 500.00 ohms in steps of 0.01
	⇕	**POWER SWING FWD RCA: 75°**	Range: 40 to 90° in steps of 1
	⇕	**POWER SWING REV REACH: 50.00 Ω**	Range: 0.10 to 500.00 ohms in steps of 0.01
	⇕	**POWER SWING QUAD REV REACH MID: 60.00 Ω**	Range: 0.10 to 500.00 ohms in steps of 0.01
	⇕	**POWER SWING QUAD REV REACH OUT: 70.00 Ω**	Range: 0.10 to 500.00 ohms in steps of 0.01
	⇕	**POWER SWING REV RCA: 75°**	Range: 40 to 90° in steps of 1
	⇕	**POWER SWING OUTER LIMIT ANGLE: 120°**	Range: 40 to 140° in steps of 1
	⇕	**POWER SWING MIDDLE LIMIT ANGLE: 90°**	Range: 40 to 140° in steps of 1

⇕	**POWER SWING INNER LIMIT ANGLE: 60°**	Range: 40 to 140° in steps of 1
⇕	**POWER SWING OUTER RGT BLD: 100.00 Ω**	Range: 0.10 to 500.00 ohms in steps of 0.01
⇕	**POWER SWING OUTER LFT BLD: 100.00 Ω**	Range: 0.10 to 500.00 ohms in steps of 0.01
⇕	**POWER SWING MIDDLE RGT BLD: 100.00 Ω**	Range: 0.10 to 500.00 ohms in steps of 0.01
⇕	**POWER SWING MIDDLE LFT BLD: 100.00 Ω**	Range: 0.10 to 500.00 ohms in steps of 0.01
⇕	**POWER SWING INNER RGT BLD: 100.00 Ω**	Range: 0.10 to 500.00 ohms in steps of 0.01
⇕	**POWER SWING INNER LFT BLD: 100.00 Ω**	Range: 0.10 to 500.00 ohms in steps of 0.01
⇕	**POWER SWING PICKUP DELAY 1: 0.030 s**	Range: 0.000 to 65.535 s in steps of 0.001
⇕	**POWER SWING RESET DELAY 1: 0.050 s**	Range: 0.000 to 65.535 s in steps of 0.001
⇕	**POWER SWING PICKUP DELAY 2: 0.017 s**	Range: 0.000 to 65.535 s in steps of 0.001
⇕	**POWER SWING PICKUP DELAY 3: 0.009 s**	Range: 0.000 to 65.535 s in steps of 0.001
⇕	**POWER SWING PICKUP DELAY 4: 0.017 s**	Range: 0.000 to 65.535 s in steps of 0.001
⇕	**POWER SWING SEAL-IN DELAY: 0.400 s**	Range: 0.000 to 65.535 s in steps of 0.001
⇕	**POWER SWING TRIP MODE: Delayed**	Range: Early, Delayed
⇕	**POWER SWING BLK: Off**	Range: FlexLogic operand
⇕	**POWER SWING TARGET: Self-reset**	Range: Self-reset, Latched, Disabled
⇧	**POWER SWING EVENTS: Disabled**	Range: Disabled, Enabled

The power swing detect element provides both power swing blocking and out-of-step tripping functions. The element measures the positive-sequence apparent impedance and traces its locus with respect to either two or three user-selectable operating characteristic boundaries. Upon detecting appropriate timing relations, the blocking and/or tripping indications are given through FlexLogic operands. The element incorporates an adaptive disturbance detector. This function does not trigger on power swings, but is capable of detecting faster disturbances—faults in particular—that can occur during power swings. Operation of this dedicated disturbance detector is signaled via the POWER SWING 50DD operand.

The power swing detect element asserts two operands intended for blocking selected protection elements on power swings: POWER SWING BLOCK is a traditional signal that is safely asserted for the entire duration of the power swing, and POWER SWING UN/BLOCK is established in the same way, but resets when an extra disturbance is detected during the power swing. The POWER SWING UN/BLOCK operand can be used for blocking selected protection elements if the intent is to respond to faults during power swing conditions.

Different protection elements respond differently to power swings. If tripping is required for faults during power swing conditions, some elements can be blocked permanently (using the POWER SWING BLOCK operand), and others can be blocked and dynamically unblocked upon fault detection (using the POWER SWING UN/BLOCK operand).

View the operating characteristic and logic figures along with the following discussion to understand the operation of the element.

The power swing detect element operates in three-step or two-step mode, as follows:

- **Three-step operation** — The power swing blocking sequence essentially times the passage of the locus of the positive-sequence impedance between the outer and the middle characteristic boundaries. If the locus enters the outer characteristic (indicated by the POWER SWING OUTER FlexLogic operand) but stays outside the middle characteristic (indicated by the POWER SWING MIDDLE FlexLogic operand) for an interval longer than **POWER SWING PICKUP DELAY 1**, the power swing blocking signal (POWER SWING BLOCK FlexLogic operand) is established and sealed-in. The blocking signal resets when the locus leaves the outer characteristic, but not sooner than the **POWER SWING RESET DELAY** 1 time.
- **Two-step operation** — If the two-step mode is selected, the sequence is identical to the three-step operation, but it is the outer and inner characteristics that are used to time the power swing locus.

The out-of-step tripping feature operates as follows for three-step and two-step power swing detection modes:

- **Three-step operation** — The out-of-step trip sequence identifies unstable power swings by determining if the impedance locus spends a finite time between the outer and middle characteristics and then a finite time between the middle and inner characteristics. The first step is similar to the power swing blocking sequence. After timer **POWER SWING PICKUP DELAY 1** times out, latch 1 is set as long as the impedance stays within the outer characteristic.

  If afterwards, at any time (given the impedance stays within the outer characteristic), the locus enters the middle characteristic but stays outside the inner characteristic for a period of time defined as **POWER SWING PICKUP DELAY 2**, latch 2 is set as long as the impedance stays inside the outer characteristic. If afterwards, at any time (given the impedance stays within the outer characteristic), the locus enters the inner characteristic and stays there for a period of time defined as **POWER SWING PICKUP DELAY 3**, latch 2 is set as long as the impedance stays inside the outer characteristic; the element is now ready to trip.

  If the "Early" trip mode is selected, the POWER SWING TRIP operand is set immediately and sealed-in for the interval set by the **POWER SWING SEAL-IN DELAY**. If the "Delayed" trip mode is selected, the element waits until the impedance locus leaves the inner characteristic, then times out for the **POWER SWING PICKUP DELAY 2** and sets latch 4; the element is now ready to trip. The trip operand is set later, when the impedance locus leaves the outer characteristic.
- **Two-step operation** — Similar to the three-step mode with two exceptions. First, the initial stage monitors the time spent by the impedance locus between the outer and inner characteristics. Second, the stage involving the **POWER SWING PICKUP DELAY 2** timer is bypassed. It is up to the user to integrate the blocking (POWER SWING BLOCK) and tripping (POWER SWING TRIP) FlexLogic operands with other protection functions and output contacts in order to make this element fully operational.

The element can be set to use either lens (mho) or rectangular (quadrilateral) characteristics, as shown in the figure. When set to “Mho,” the element applies the right and left blinders as well. If the blinders are not required, set their settings high enough to effectively disable the blinders.

Figure 5-132: Power swing detect mho operating characteristics

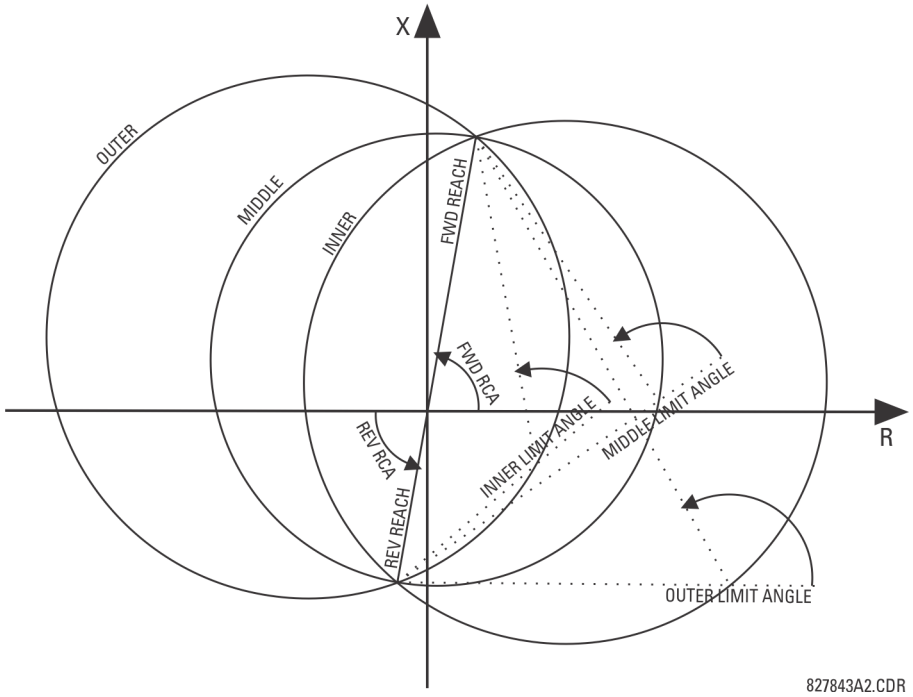

Figure 5-133: Effects of blinders on the mho characteristics

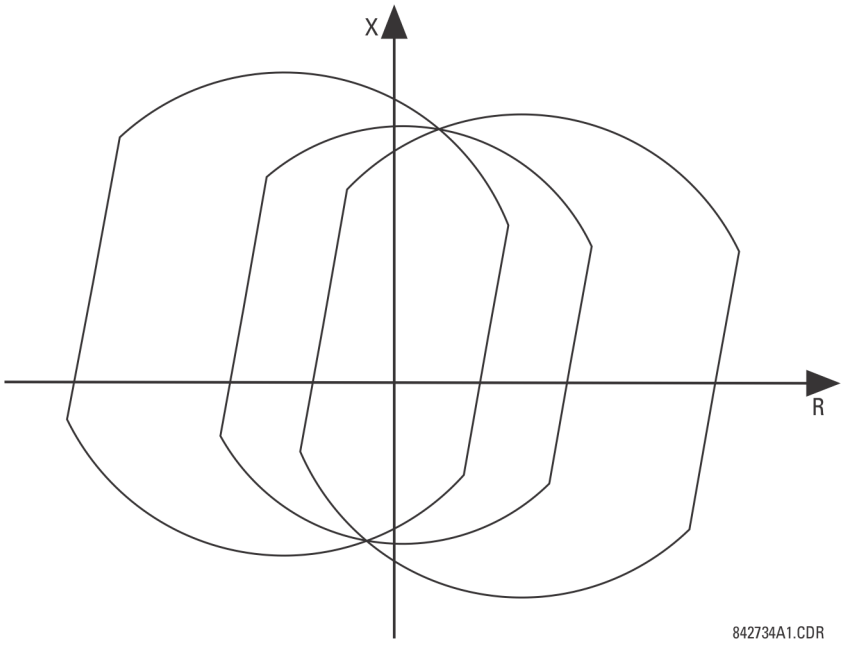

Figure 5-134: Power swing detect quadrilateral operating characteristics

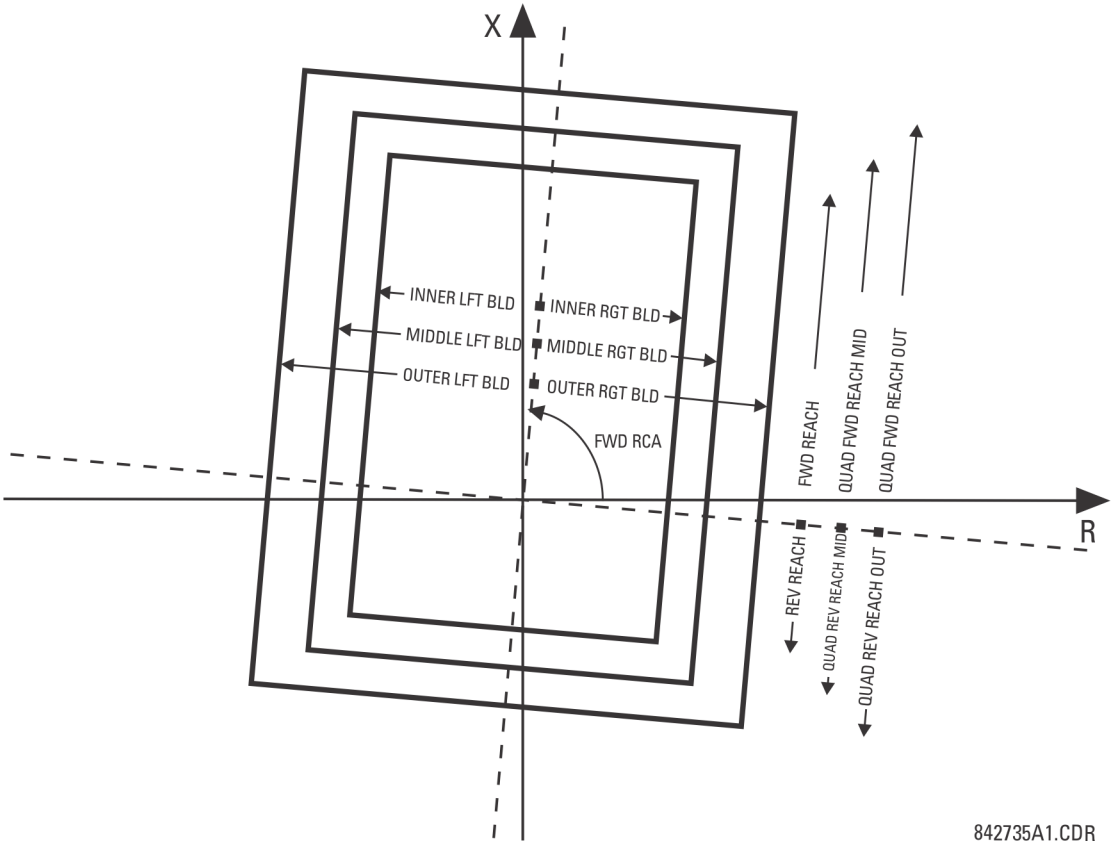

The FlexLogic output operands for the power swing detect element are as follows:

- POWER SWING OUTER, POWER SWING MIDDLE, POWER SWING INNER, POWER SWING TMR2 PKP, POWER SWING TMR3 PKP, and POWER SWING TMR4 PKP are auxiliary operands that facilitate testing and special applications
- POWER SWING BLOCK blocks selected protection elements, such as distance functions
- POWER SWING UN/BLOCK blocks those protection elements that are intended to be blocked under power swings, but subsequently unblocked when a fault occurs after the power swing blocking condition has been established
- POWER SWING 50DD indicates that an adaptive disturbance detector integrated with the element has picked up. This operand triggers on faults occurring during power swing conditions. This includes both three-phase and single-pole-open conditions.
- POWER SWING INCOMING indicates an unstable power swing with an incoming locus (the locus enters the inner characteristic)
- POWER SWING OUTGOING indicates an unstable power swing with an outgoing locus (the locus leaving the outer characteristic). This operand can be used to count unstable swings and take certain action only after a pre-defined number of unstable power swings.
- POWER SWING TRIP is a trip command

The settings for the power swing detect element are as follows.

POWER SWING FUNCTION — This setting enables and disables the power swing detection element. The setting applies to both power swing blocking and out-of-step tripping functions.

POWER SWING SOURCE — The source setting identifies the signal source for both blocking and tripping functions.

POWER SWING SHAPE — This setting selects the shapes (either “Mho” or “Quad”) of the outer, middle, and inner characteristics of the power swing detect element. The operating principle is not affected. The “Mho” characteristics use the left and right blinders.

POWER SWING MODE — This setting selects between the two-step and three-step operating modes and applies it to both power swing blocking and out-of-step tripping functions. The three-step mode applies if there is enough space between the maximum load impedances and distance characteristics of the relay that all three (outer, middle, and inner) characteristics can be placed between the load and the distance characteristics. Whether the spans between the outer and middle as well as the middle and inner characteristics are sufficient is determined by analysis of the fastest power swings expected in correlation with settings of the power swing timers.

The two-step mode uses only the outer and inner characteristics for both blocking and tripping functions. This leaves more space in heavily loaded systems to place two power swing characteristics between the distance characteristics and the maximum load, but allows for only one determination of the impedance trajectory.

POWER SWING SUPV — A common overcurrent pickup level supervises all three power swing characteristics. The supervision responds to the positive-sequence current.

POWER SW I2 SUPV ENAB — This setting is to enable I2 supervision logic through a FlexLogic operand, which is used to detect the presence of significant unbalance in current signals, such as during fault conditions. Under these conditions, the POWER SWING BLOCK operand is not asserted.

POWER SWING I2 SUPV — This setting specifies the threshold of the I2 supervision logic.

POWER SWING FWD REACH — This setting specifies the forward reach of all three mho characteristics and the inner quadrilateral characteristic. For a simple system consisting of a line and two equivalent sources, this reach needs to be higher than the sum of the line and remote source positive-sequence impedances. Detailed transient stability studies can be needed for complex systems in order to determine this setting. The angle of this reach impedance is specified by the **POWER SWING FWD RCA** setting.

POWER SWING QUAD FWD REACH MID — This setting specifies the forward reach of the middle quadrilateral characteristic. The angle of this reach impedance is specified by the **POWER SWING FWD RCA** setting. The setting is not used if the shape setting is "Mho."

POWER SWING QUAD FWD REACH OUT — This setting specifies the forward reach of the outer quadrilateral characteristic. The angle of this reach impedance is specified by the **POWER SWING FWD RCA** setting. The setting is not used if the shape setting is "Mho."

POWER SWING FWD RCA — This setting specifies the angle of the forward reach impedance for the mho characteristics, angles of all blinders, and both forward and reverse reach impedances of the quadrilateral characteristics.

POWER SWING REV REACH — This setting specifies the reverse reach of all three mho characteristics and the inner quadrilateral characteristic. For a simple system of a line and two equivalent sources, this reach needs to be higher than the positive-sequence impedance of the local source. Detailed transient stability studies can be needed for complex systems to determine this setting. The angle of this reach impedance is specified by the **POWER SWING REV RCA** setting for "Mho," and the **POWER SWING FWD RCA** setting for inner "Quad."

POWER SWING QUAD REV REACH MID — This setting specifies the reverse reach of the middle quadrilateral characteristic. The angle of this reach impedance is specified by the **POWER SWING FWD RCA** setting. The setting is not used if the shape setting is "Mho."

POWER SWING QUAD REV REACH OUT — This setting specifies the reverse reach of the outer quadrilateral characteristic. The angle of this reach impedance is specified by the **POWER SWING FWD RCA** setting. The setting is not used if the shape setting is "Mho."

POWER SWING REV RCA — This setting specifies the angle of the reverse reach impedance for the mho characteristics. This setting applies to mho shapes only.

POWER SWING OUTER LIMIT ANGLE — This setting defines the outer power swing characteristic. The convention depicted in the power swing detect mho operating characteristic diagram are to be observed: values greater than 90° result in an apple-shaped characteristic; values less than 90° result in a lens-shaped characteristic. This angle must be selected in consideration of the maximum expected load. If the maximum load angle is known, coordinate the outer limit angle with a 20° security margin. Detailed studies can be needed for complex systems to determine this setting. This setting applies to mho shapes only.

POWER SWING MIDDLE LIMIT ANGLE — This setting defines the middle power swing detect characteristic. It is relevant only for the three-step mode. A typical value is close to the average of the outer and inner limit angles. This setting applies to mho shapes only.

POWER SWING INNER LIMIT ANGLE — This setting defines the inner power swing detect characteristic. The inner characteristic is used by the out-of-step tripping function: beyond the inner characteristic out-of-step trip action is definite (the actual trip can be delayed as per the **TRIP MODE** setting). Therefore, this angle must be selected in consideration to the power swing angle beyond which the system becomes unstable and cannot recover.

The inner characteristic is also used by the power swing blocking function in the two-step mode. In this case, set this angle large enough so that the characteristics of the distance elements are safely enclosed by the inner characteristic. This setting applies to mho shapes only.

POWER SWING OUTER, **MIDDLE**, and **INNER RGT BLD** — These settings specify the resistive reach of the right blinder. The blinder applies to both "Mho" and "Quad" characteristics. Set these value high if no blinder is required for the "Mho" characteristic.

POWER SWING OUTER, **MIDDLE**, and **INNER LFT BLD** — These settings specify the resistive reach of the left blinder. Enter a positive value; the relay automatically uses a negative value. The blinder applies to both "Mho" and "Quad" characteristics. Set this value high if no blinder is required for the "Mho" characteristic.

POWER SWING PICKUP DELAY 1 — All the coordinating timers are related to each other and need to be set to detect the fastest expected power swing and produce out-of-step tripping in a secure manner. Set the timers in relation to the power swing detect characteristics, mode of power swing detect operation, and mode of out-of-step tripping. This timer defines the interval that the impedance locus must spend between the outer and inner characteristics (two-step operating mode), or between the outer and middle characteristics (three-step operating mode) before the power swing blocking signal is established. This time delay must be set shorter than the time required for the impedance locus to travel between the two selected characteristics during the fastest expected power swing. This setting is relevant for both power swing blocking and out-of-step tripping.

POWER SWING RESET DELAY 1 — This setting defines the dropout delay for the power swing blocking signal. Detection of a condition requiring a block output sets latch 1 after **PICKUP DELAY 1** time. When the impedance locus leaves the outer characteristic, timer **POWER SWING RESET DELAY 1** is started. When the timer times-out, the latch is reset. Select this setting to give extra security for the power swing blocking action.

POWER SWING PICKUP DELAY 2 — Controls the out-of-step tripping function in the three-step mode only. This timer defines the interval the impedance locus must spend between the middle and inner characteristics before the second step of the out-of-step tripping sequence is completed. This time delay must be set shorter than the time required for the impedance locus to travel between the two characteristics during the fastest expected power swing.

POWER SWING PICKUP DELAY 3 — Controls the out-of-step tripping function only. It defines the interval the impedance locus must spend within the inner characteristic before the last step of the out-of-step tripping sequence is completed and the element is armed to trip. The actual moment of tripping is controlled by the **TRIP MODE** setting. This time delay is provided for extra security before the out-of-step trip action is executed.

POWER SWING PICKUP DELAY 4 — Controls the out-of-step tripping function in "Delayed" trip mode only. This timer defines the interval the impedance locus must spend outside the inner characteristic but within the outer characteristic before the element is armed for the delayed trip. The delayed trip occurs when the impedance leaves the outer characteristic. This time delay is provided for extra security. Set it considering the fastest expected power swing.

POWER SWING SEAL-IN DELAY — The out-of-step trip FlexLogic operand (POWER SWING TRIP) is sealed-in for the specified period of time. The sealing-in is crucial in the delayed trip mode, as the original trip signal is a very short pulse occurring when the impedance locus leaves the outer characteristic after the out-of-step sequence is completed.

POWER SWING TRIP MODE — Selection of the "Early" trip mode results in an instantaneous trip after the last step in the out-of-step tripping sequence is completed. The early trip mode stresses the circuit breakers as the currents at that moment are high (the electromotive forces of the two equivalent systems are approximately 180° apart). Selection of the "Delayed" trip mode results in a trip at the moment when the impedance locus leaves the outer characteristic. Delayed trip mode relaxes the operating conditions for the breakers as the currents at that moment are low. Make the selection considering the capability of the breakers in the system.

POWER SWING BLK — This setting specifies the FlexLogic operand used for blocking the out-of-step function only. The power swing blocking function is operational all the time as long as the element is enabled. The blocking signal resets the output POWER SWING TRIP operand but does not stop the out-of-step tripping sequence.

POWER SWING EVENTS — Enables and disables the logging of power swing detect events in the sequence of events recorder.

Figure 5-135: Power swing detect logic (Sheet 1 of 3)

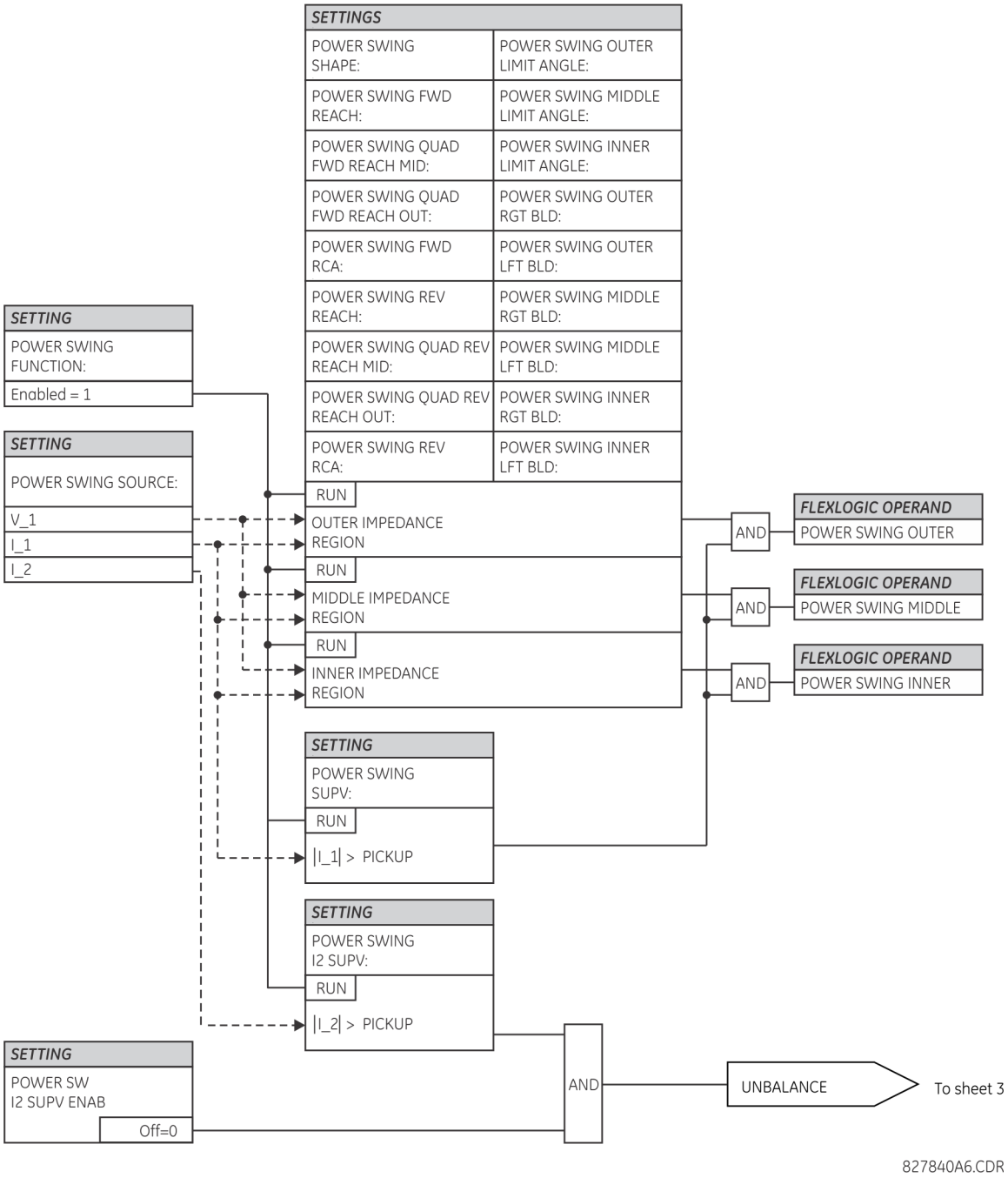

5

Figure 5-136: Power swing detect logic (Sheet 2 of 3)

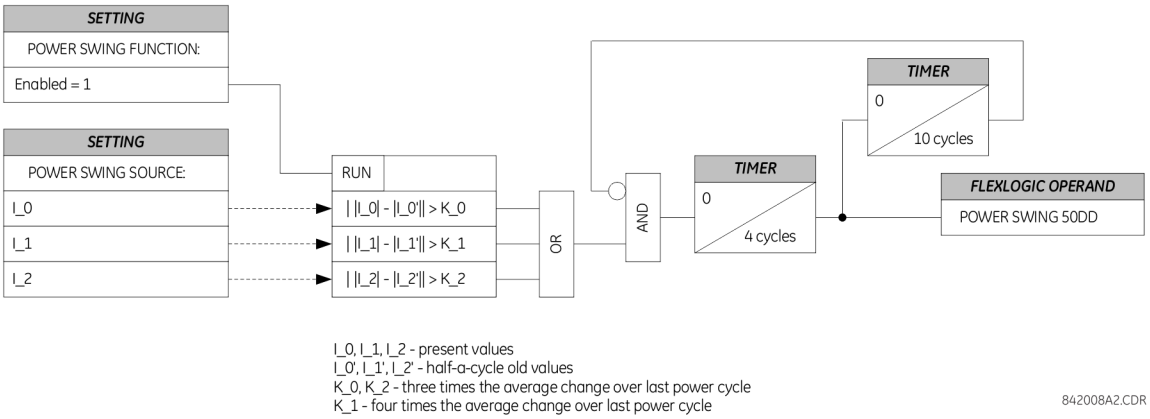

Figure 5-137: Power swing detect logic (Sheet 3 of 3)

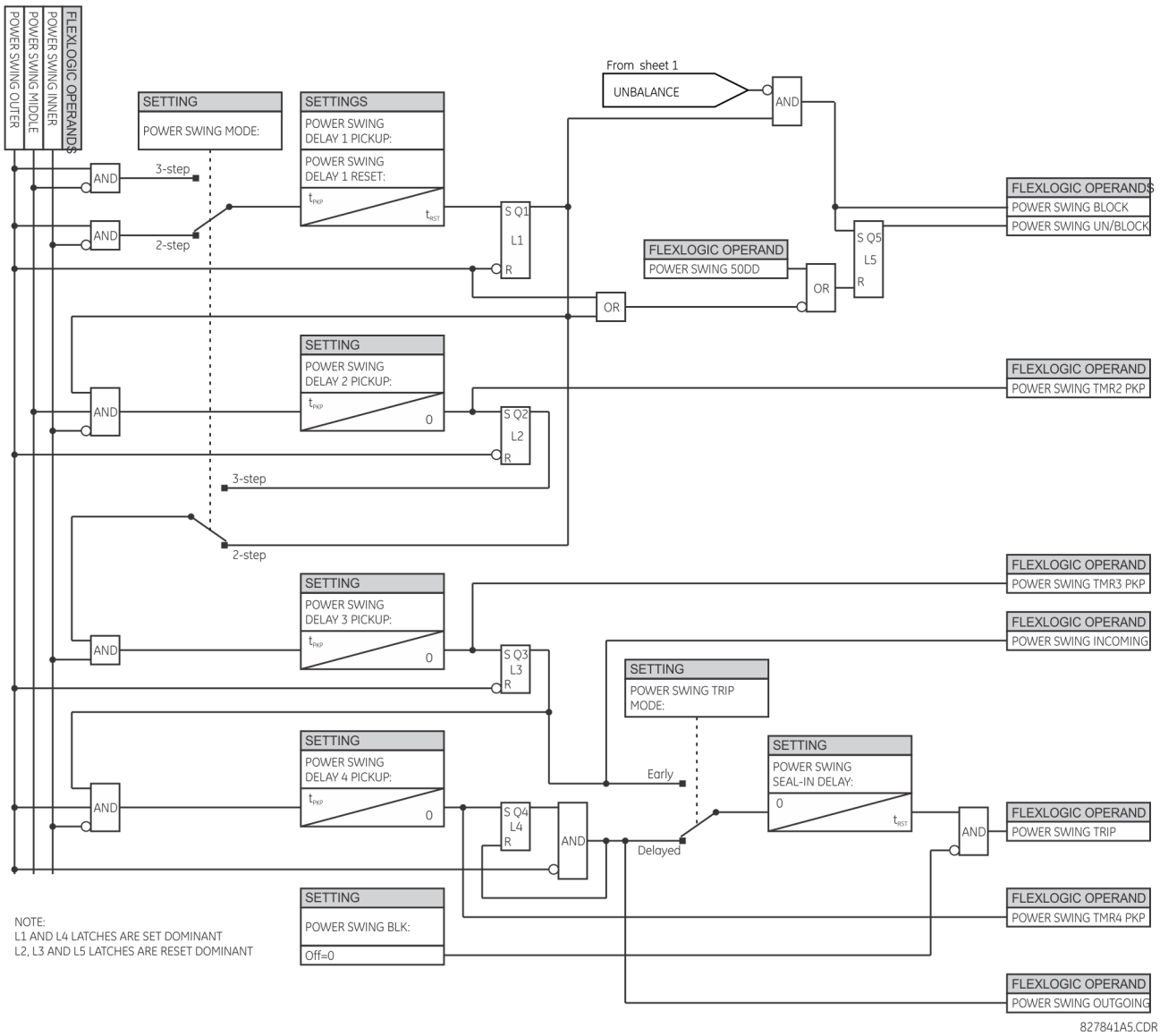

5.7.7 Load encroachment

SETTINGS ⇨⇩ GROUPED ELEMENTS ⇨ SETTING GROUP 1(6) ⇨⇩ LOAD ENCROACHMENT

■ LOAD ENCROACHMENT ■	⇔	LOAD ENCROACHMENT FUNCTION: Disabled	Range: Disabled, Enabled
	⇩	LOAD ENCROACHMENT SOURCE: SRC 1	Range: SRC 1, SRC 2, SRC 3, SRC 4
	⇩	LOAD ENCROACHMENT MIN VOLT: 0.250 pu	Range: 0.004 to 3.000 pu in steps of 0.001
	⇩	LOAD ENCROACHMENT REACH: 1.00 Ω	Range: 0.02 to 250.00 ohms in steps of 0.01
	⇩	LOAD ENCROACHMENT ANGLE: 30°	Range: 5 to 50° in steps of 1
	⇩	LOAD ENCROACHMENT PKP DELAY: 0.000 s	Range: 0.000 to 65.535 s in steps of 0.001
	⇩	LOAD ENCROACHMENT RST DELAY: 0.000 s	Range: 0.000 to 65.535 s in steps of 0.001
	⇩	LOAD ENCRMNT BLK: Off	Range: FlexLogic operand
	⇩	LOAD ENCROACHMENT TARGET: Self-reset	Range: Self-reset, Latched, Disabled
	⇧	LOAD ENCROACHMENT EVENTS: Disabled	Range: Disabled, Enabled

The load encroachment element responds to the positive-sequence voltage and current and applies a characteristic as shown in the figure.

Figure 5-138: Load encroachment characteristic

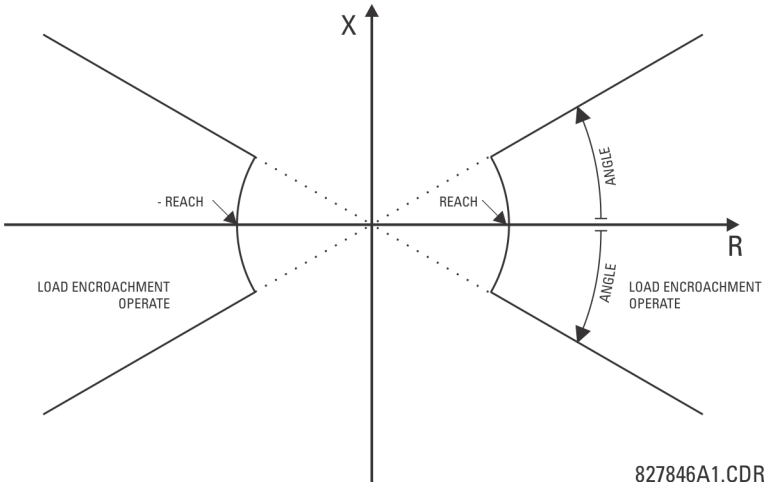

The element operates if the positive-sequence voltage is above a settable level and asserts its output signal that can be used to block selected protection elements, such as distance or phase overcurrent. The following figure shows an effect of the load encroachment characteristics used to block the quadrilateral distance element.

Figure 5-139: Load encroachment applied to distance element

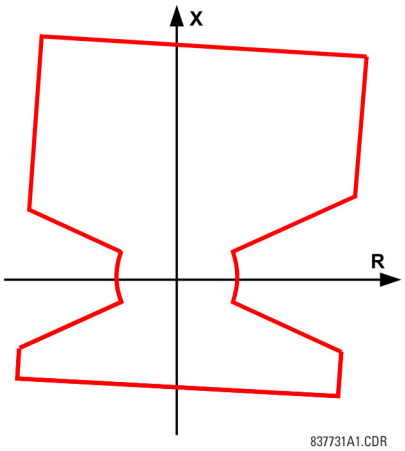

LOAD ENCROACHMENT MIN VOLT — This setting specifies the minimum positive-sequence voltage required for operation of the element. When the voltage is below this threshold, a blocking signal is not asserted by the element. When selecting this setting, remember that the L90 measures the phase-to-ground sequence voltages regardless of the VT connection.

The nominal VT secondary voltage as specified with the **SYSTEM SETUP ⇨⇩ AC INPUTS ⇨ VOLTAGE BANK X5 ⇨⇩ PHASE VT SECONDARY** setting is the per-unit base for this setting.

5

LOAD ENCROACHMENT REACH — This setting specifies the resistive reach of the element as shown in the Load Encroachment Characteristic diagram. Enter this setting in secondary ohms and calculate it as the positive-sequence resistance seen by the relay under maximum load conditions and unity power factor.

LOAD ENCROACHMENT ANGLE — This setting specifies the size of the blocking region as shown on the Load Encroachment Characteristic diagram and applies to the positive-sequence impedance.

Figure 5-140: Load encroachment logic

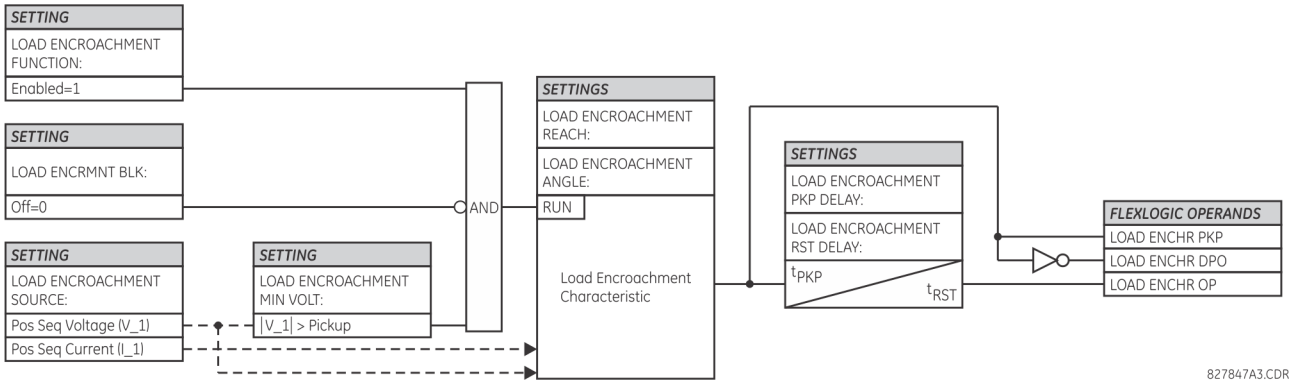

5.7.8 Phase current

5.7.8.1 Menu

SETTINGS ⇨⇩ GROUPED ELEMENTS ⇨ SETTING GROUP 1(6) ⇨⇩ PHASE CURRENT

■ **PHASE CURRENT** ■	⇔	■ **PHASE TOC 1** ■	See page 5-262

⇩

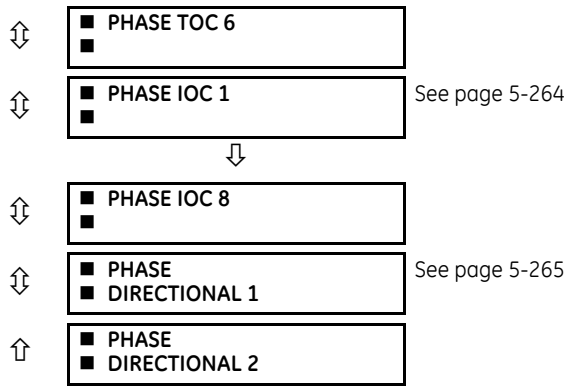

5.7.8.2 Inverse TOC curve characteristics

The inverse time overcurrent curves used by the time overcurrent elements are the IEEE, IEC, GE Type IAC, and I^2t standard curve shapes. This allows for simplified coordination with downstream devices.

If none of these curve shapes is adequate, FlexCurves can be used to customize the inverse time curve characteristics. The definite time curve is also an option that can be appropriate if only simple protection is required.

Table 5-29: Overcurrent curve types

IEEE	IEC	GE type IAC	Other
IEEE Extremely Inverse	IEC Curve A (BS142)	IAC Extremely Inverse	I^2t
IEEE Very Inverse	IEC Curve B (BS142)	IAC Very Inverse	FlexCurves A, B, C, and D
IEEE Moderately Inverse	IEC Curve C (BS142)	IAC Inverse	Recloser Curves
	IEC Short Inverse	IAC Short Inverse	Definite Time

A time dial multiplier setting allows selection of a multiple of the base curve shape (where the time dial multiplier = 1) with the curve shape (**CURVE**) setting. Unlike the electromechanical time dial equivalent, operate times are directly proportional to the time multiplier (**TD MULTIPLIER**) setting value. For example, all times for a multiplier of 10 are 10 times the multiplier 1 or base curve values. Setting the multiplier to zero results in an instantaneous response to all current levels above pickup.

Time overcurrent time calculations are made with an internal *energy capacity* memory variable. When this variable indicates that the energy capacity has reached 100%, a time overcurrent element operates. If less than 100% energy capacity is accumulated in this variable and the current falls below the dropout threshold of 97 to 98% of the pickup value, the variable must be reduced. Two methods of this resetting operation are available: “Instantaneous” and “Timed.” The “Instantaneous” selection is intended for applications with other relays, such as most static relays, which set the energy capacity directly to zero when the current falls below the reset threshold. The “Timed” selection can be used where the relay must coordinate with electromechanical relays.

The URs calculate operate time corresponding to the values in the range of 1.03 to 20 multiples of the pickup current. Above 20 multiples of the pickup current, URs clamp the operate time to the value at a multiple of 20, resulting in the flat part of the characteristics. Reset time is calculated in the range of 0 to 0.97 multiples of the pickup current.

IEEE curves

The IEEE time overcurrent curve shapes conform to industry standards and the IEEE C37.112-1996 curve classifications for extremely, very, and moderately inverse curves. The IEEE curves are derived from the operate and reset time equations.

$$T = TDM \times \left[\frac{A}{\left(\frac{I}{I_{pickup}}\right)^p - 1} + B \right], \quad T_{RESET} = TDM \times \left[\frac{t_r}{1 - \left(\frac{I}{I_{pickup}}\right)^2} \right] \qquad \textbf{Eq. 5-15}$$

where

T = operate time (in seconds)
TDM = Multiplier setting
I = input current
I_{pickup} = Pickup Current setting
A, B, p = constants defined in the table
T_{RESET} = reset time in seconds (assuming energy capacity is 100% and RESET is "Timed")
t_r = characteristic constant defined in the table

Table 5-30: IEEE inverse time curve constants

IEEE curve shape	A	B	p	t_r
IEEE Extremely Inverse	28.2	0.1217	2.0000	29.1
IEEE Very Inverse	19.61	0.491	2.0000	21.6
IEEE Moderately Inverse	0.0515	0.1140	0.02000	4.85

Table 5-31: IEEE curve trip times (in seconds)

Multiplier (TDM)	Current (I / I_{pickup})									
	1.5	2.0	3.0	4.0	5.0	6.0	7.0	8.0	9.0	10.0
IEEE Extremely Inverse										
0.5	11.341	4.761	1.823	1.001	0.648	0.464	0.355	0.285	0.237	0.203
1.0	22.682	9.522	3.647	2.002	1.297	0.927	0.709	0.569	0.474	0.407
2.0	45.363	19.043	7.293	4.003	2.593	1.855	1.418	1.139	0.948	0.813
4.0	90.727	38.087	14.587	8.007	5.187	3.710	2.837	2.277	1.897	1.626
6.0	136.090	57.130	21.880	12.010	7.780	5.564	4.255	3.416	2.845	2.439
8.0	181.454	76.174	29.174	16.014	10.374	7.419	5.674	4.555	3.794	3.252
10.0	226.817	95.217	36.467	20.017	12.967	9.274	7.092	5.693	4.742	4.065
IEEE Very Inverse										
0.5	8.090	3.514	1.471	0.899	0.654	0.526	0.450	0.401	0.368	0.345
1.0	16.179	7.028	2.942	1.798	1.308	1.051	0.900	0.802	0.736	0.689
2.0	32.358	14.055	5.885	3.597	2.616	2.103	1.799	1.605	1.472	1.378
4.0	64.716	28.111	11.769	7.193	5.232	4.205	3.598	3.209	2.945	2.756
6.0	97.074	42.166	17.654	10.790	7.849	6.308	5.397	4.814	4.417	4.134
8.0	129.432	56.221	23.538	14.387	10.465	8.410	7.196	6.418	5.889	5.513
10.0	161.790	70.277	29.423	17.983	13.081	10.513	8.995	8.023	7.361	6.891
IEEE Moderately Inverse										
0.5	3.220	1.902	1.216	0.973	0.844	0.763	0.706	0.663	0.630	0.603
1.0	6.439	3.803	2.432	1.946	1.688	1.526	1.412	1.327	1.260	1.207
2.0	12.878	7.606	4.864	3.892	3.377	3.051	2.823	2.653	2.521	2.414
4.0	25.756	15.213	9.729	7.783	6.753	6.102	5.647	5.307	5.041	4.827
6.0	38.634	22.819	14.593	11.675	10.130	9.153	8.470	7.960	7.562	7.241
8.0	51.512	30.426	19.458	15.567	13.507	12.204	11.294	10.614	10.083	9.654
10.0	64.390	38.032	24.322	19.458	16.883	15.255	14.117	13.267	12.604	12.068

IEC curves

For European applications, the relay offers three standard curves defined in IEC 255-4 and British standard BS142. These are defined as IEC Curve A, IEC Curve B, and IEC Curve C. The IEC curves are derived by the operate and reset time equations.

$$T = TDM \times \left[\frac{K}{(I/I_{pickup})^E - 1} \right], \quad T_{RESET} = TDM \times \left[\frac{t_r}{1 - (I/I_{pickup})^2} \right] \qquad \textbf{Eq. 5-16}$$

where

T = operate time (in seconds)
TDM = Multiplier setting
I = input current
I_{pickup} = Pickup Current setting
K, E = constants defined in the table
t_r = characteristic constant defined in the table
T_{RESET} = reset time in seconds (assuming energy capacity is 100% and **RESET** is "Timed")

Table 5-32: IEC (BS) inverse time curve constants

IEC (BS) curve shape	K	E	t_r
IEC Curve A (BS142)	0.140	0.020	9.7
IEC Curve B (BS142)	13.500	1.000	43.2
IEC Curve C (BS142)	80.000	2.000	58.2
IEC Short Inverse	0.050	0.040	0.500

Table 5-33: IEC curve trip times (in seconds)

Multiplier (TDM)	Current (I / I_{pickup})									
	1.5	**2.0**	**3.0**	**4.0**	**5.0**	**6.0**	**7.0**	**8.0**	**9.0**	**10.0**
IEC Curve A										
0.05	0.860	0.501	0.315	0.249	0.214	0.192	0.176	0.165	0.156	0.149
0.10	1.719	1.003	0.630	0.498	0.428	0.384	0.353	0.330	0.312	0.297
0.20	3.439	2.006	1.260	0.996	0.856	0.767	0.706	0.659	0.623	0.594
0.40	6.878	4.012	2.521	1.992	1.712	1.535	1.411	1.319	1.247	1.188
0.60	10.317	6.017	3.781	2.988	2.568	2.302	2.117	1.978	1.870	1.782
0.80	13.755	8.023	5.042	3.984	3.424	3.070	2.822	2.637	2.493	2.376
1.00	17.194	10.029	6.302	4.980	4.280	3.837	3.528	3.297	3.116	2.971
IEC Curve B										
0.05	1.350	0.675	0.338	0.225	0.169	0.135	0.113	0.096	0.084	0.075
0.10	2.700	1.350	0.675	0.450	0.338	0.270	0.225	0.193	0.169	0.150
0.20	5.400	2.700	1.350	0.900	0.675	0.540	0.450	0.386	0.338	0.300
0.40	10.800	5.400	2.700	1.800	1.350	1.080	0.900	0.771	0.675	0.600
0.60	16.200	8.100	4.050	2.700	2.025	1.620	1.350	1.157	1.013	0.900
0.80	21.600	10.800	5.400	3.600	2.700	2.160	1.800	1.543	1.350	1.200
1.00	27.000	13.500	6.750	4.500	3.375	2.700	2.250	1.929	1.688	1.500
IEC Curve C										
0.05	3.200	1.333	0.500	0.267	0.167	0.114	0.083	0.063	0.050	0.040
0.10	6.400	2.667	1.000	0.533	0.333	0.229	0.167	0.127	0.100	0.081
0.20	12.800	5.333	2.000	1.067	0.667	0.457	0.333	0.254	0.200	0.162
0.40	25.600	10.667	4.000	2.133	1.333	0.914	0.667	0.508	0.400	0.323
0.60	38.400	16.000	6.000	3.200	2.000	1.371	1.000	0.762	0.600	0.485

Multiplier (TDM)	Current (I / I_{pickup})									
	1.5	**2.0**	**3.0**	**4.0**	**5.0**	**6.0**	**7.0**	**8.0**	**9.0**	**10.0**
0.80	51.200	21.333	8.000	4.267	2.667	1.829	1.333	1.016	0.800	0.646
1.00	64.000	26.667	10.000	5.333	3.333	2.286	1.667	1.270	1.000	0.808
IEC Short Inverse										
0.05	0.153	0.089	0.056	0.044	0.038	0.034	0.031	0.029	0.027	0.026
0.10	0.306	0.178	0.111	0.088	0.075	0.067	0.062	0.058	0.054	0.052
0.20	0.612	0.356	0.223	0.175	0.150	0.135	0.124	0.115	0.109	0.104
0.40	1.223	0.711	0.445	0.351	0.301	0.269	0.247	0.231	0.218	0.207
0.60	1.835	1.067	0.668	0.526	0.451	0.404	0.371	0.346	0.327	0.311
0.80	2.446	1.423	0.890	0.702	0.602	0.538	0.494	0.461	0.435	0.415
1.00	3.058	1.778	1.113	0.877	0.752	0.673	0.618	0.576	0.544	0.518

IAC curves

The curves for the General Electric type IAC relay family are derived from the formulae:

$$T = TDM \times \left(A + \frac{B}{(I/I_{pkp}) - C} + \frac{D}{((I/I_{pkp}) - C)^2} + \frac{E}{((I/I_{pkp}) - C)^3} \right) \quad , \quad T_{RESET} = TDM \times \left[\frac{t_r}{1 - (I/I_{pkp})^2} \right] \qquad \textbf{Eq. 5-17}$$

where

T = operate time (in seconds)
TDM = Multiplier setting
I = Input current
I_{pkp} = Pickup Current setting
A to E = constants defined in the table
t_r = characteristic constant defined in the table
T_{RESET} = reset time in seconds (assuming energy capacity is 100% and RESET is "Timed")

Table 5-34: GE type IAC inverse time curve constants

IAC curve shape	A	B	C	D	E	t_r
IAC Extreme Inverse	0.0040	0.6379	0.6200	1.7872	0.2461	6.008
IAC Very Inverse	0.0900	0.7955	0.1000	–1.2885	7.9586	4.678
IAC Inverse	0.2078	0.8630	0.8000	–0.4180	0.1947	0.990
IAC Short Inverse	0.0428	0.0609	0.6200	–0.0010	0.0221	0.222

Table 5-35: GE type IAC curve trip times

Multiplier (TDM)	Current (I / I_{pickup})									
	1.5	**2.0**	**3.0**	**4.0**	**5.0**	**6.0**	**7.0**	**8.0**	**9.0**	**10.0**
IAC Extremely Inverse										
0.5	1.699	0.749	0.303	0.178	0.123	0.093	0.074	0.062	0.053	0.046
1.0	3.398	1.498	0.606	0.356	0.246	0.186	0.149	0.124	0.106	0.093
2.0	6.796	2.997	1.212	0.711	0.491	0.372	0.298	0.248	0.212	0.185
4.0	13.591	5.993	2.423	1.422	0.983	0.744	0.595	0.495	0.424	0.370
6.0	20.387	8.990	3.635	2.133	1.474	1.115	0.893	0.743	0.636	0.556
8.0	27.183	11.987	4.846	2.844	1.966	1.487	1.191	0.991	0.848	0.741
10.0	33.979	14.983	6.058	3.555	2.457	1.859	1.488	1.239	1.060	0.926
IAC Very Inverse										
0.5	1.451	0.656	0.269	0.172	0.133	0.113	0.101	0.093	0.087	0.083

Multiplier (TDM)	Current (I / I_{pickup})									
	1.5	**2.0**	**3.0**	**4.0**	**5.0**	**6.0**	**7.0**	**8.0**	**9.0**	**10.0**
1.0	2.901	1.312	0.537	0.343	0.266	0.227	0.202	0.186	0.174	0.165
2.0	5.802	2.624	1.075	0.687	0.533	0.453	0.405	0.372	0.349	0.331
4.0	11.605	5.248	2.150	1.374	1.065	0.906	0.810	0.745	0.698	0.662
6.0	17.407	7.872	3.225	2.061	1.598	1.359	1.215	1.117	1.046	0.992
8.0	23.209	10.497	4.299	2.747	2.131	1.813	1.620	1.490	1.395	1.323
10.0	29.012	13.121	5.374	3.434	2.663	2.266	2.025	1.862	1.744	1.654
IAC Inverse										
0.5	0.578	0.375	0.266	0.221	0.196	0.180	0.168	0.160	0.154	0.148
1.0	1.155	0.749	0.532	0.443	0.392	0.360	0.337	0.320	0.307	0.297
2.0	2.310	1.499	1.064	0.885	0.784	0.719	0.674	0.640	0.614	0.594
4.0	4.621	2.997	2.128	1.770	1.569	1.439	1.348	1.280	1.229	1.188
6.0	6.931	4.496	3.192	2.656	2.353	2.158	2.022	1.921	1.843	1.781
8.0	9.242	5.995	4.256	3.541	3.138	2.878	2.695	2.561	2.457	2.375
10.0	11.552	7.494	5.320	4.426	3.922	3.597	3.369	3.201	3.072	2.969
IAC Short Inverse										
0.5	0.072	0.047	0.035	0.031	0.028	0.027	0.026	0.026	0.025	0.025
1.0	0.143	0.095	0.070	0.061	0.057	0.054	0.052	0.051	0.050	0.049
2.0	0.286	0.190	0.140	0.123	0.114	0.108	0.105	0.102	0.100	0.099
4.0	0.573	0.379	0.279	0.245	0.228	0.217	0.210	0.204	0.200	0.197
6.0	0.859	0.569	0.419	0.368	0.341	0.325	0.314	0.307	0.301	0.296
8.0	1.145	0.759	0.559	0.490	0.455	0.434	0.419	0.409	0.401	0.394
10.0	1.431	0.948	0.699	0.613	0.569	0.542	0.524	0.511	0.501	0.493

I^2t curves

The I^2t curves are derived as follows:

$$T = TDM \times \left[\frac{100}{\left(\frac{I}{I_{pickup}} \right)^2} \right], \quad T_{RESET} = TDM \times \left[\frac{100}{\left(\frac{I}{I_{pickup}} \right)^{-2}} \right] \qquad \textbf{Eq. 5-18}$$

where

T = Operate time (in seconds)
TDM = Multiplier setting
I = Input current
I_{pickup} = Pickup Current setting
T_{RESET} = reset time in seconds (assuming energy capacity is 100% and RESET is “Timed”)

Table 5-36: I^2t curve trip times

Multiplier (TDM)	Current (I / I_{pickup})									
	1.5	**2.0**	**3.0**	**4.0**	**5.0**	**6.0**	**7.0**	**8.0**	**9.0**	**10.0**
0.01	0.44	0.25	0.11	0.06	0.04	0.03	0.02	0.02	0.01	0.01
0.10	4.44	2.50	1.11	0.63	0.40	0.28	0.20	0.16	0.12	0.10
1.00	44.44	25.00	11.11	6.25	4.00	2.78	2.04	1.56	1.23	1.00
10.00	444.44	250.00	111.11	62.50	40.00	27.78	20.41	15.63	12.35	10.00
100.00	4444.4	2500.0	1111.1	625.00	400.00	277.78	204.08	156.25	123.46	100.00
600.00	26666.7	15000.0	6666.7	3750.0	2400.0	1666.7	1224.5	937.50	740.74	600.00

FlexCurves

FlexCurves are described in the FlexCurves section later in this chapter. The curve shapes for the FlexCurves are derived from the formulae:

$$T = TDM \times \left[\text{FlexCurve Time at} \left(\frac{I}{I_{pickup}} \right) \right] \quad \text{when} \left(\frac{I}{I_{pickup}} \right) \geq 1.00 \qquad \textbf{Eq. 5-19}$$

$$T_{RESET} = TDM \times \left[\text{FlexCurve Time at} \left(\frac{I}{I_{pickup}} \right) \right] \quad \text{when} \left(\frac{I}{I_{pickup}} \right) \leq 0.98 \qquad \textbf{Eq. 5-20}$$

where

T = operate time (in seconds)
TDM = Multiplier setting
I = Input Current
I_{pickup} = Pickup Current setting
T_{RESET} = Reset Time in seconds (assuming energy capacity is 100% and **RESET**: Timed)

Definite time curve

The Definite Time curve shape operates as soon as the pickup level is exceeded for a specified period of time. The base definite time curve delay is in seconds. The curve multiplier of 0.00 to 600.00 makes this delay adjustable from instantaneous to 600.00 seconds in steps of 10 ms. The definite time curve shapes are defined as follows:

$$T = TDM \text{ in seconds, when } I > I_{pickup} \qquad \textbf{Eq. 5-21}$$

$$T_{RESET} = TDM \text{ in seconds} \qquad \textbf{Eq. 5-22}$$

where

T = Operate Time (in seconds)
TDM = Multiplier setting
I = Input Current
I_{pickup} = Pickup Current setting
T_{RESET} = Reset Time in seconds (assuming energy capacity is 100% and RESET: Timed)

Recloser curves

The L90 uses the FlexCurve feature to facilitate programming of 41 recloser curves. See the FlexCurves settings section earlier in this chapter for details.

5.7.8.3 Phase time overcurrent (ANSI 51P, IEC PTOC)

SETTINGS ⇨⇩ GROUPED ELEMENTS ⇨⇩ SETTING GROUP 1(6) ⇨ PHASE CURRENT ⇨ PHASE TOC1(6)

■ **PHASE TOC 1** ■	⇔	**PHASE TOC1 FUNCTION: Disabled**	Range: Disabled, Enabled
	⇩	**PHASE TOC1 SIGNAL SOURCE: SRC 1**	Range: SRC 1, SRC 2, SRC 3, SRC 4
	⇩	**PHASE TOC1 INPUT: Phasor**	Range: Phasor, RMS
	⇩	**PHASE TOC1 PICKUP: 1.000 pu**	Range: 0.020 to 30.000 pu in steps of 0.001
	⇩	**PHASE TOC1 CURVE: IEEE Mod Inv**	Range: see Overcurrent Curve Types table

⇕	**PHASE TOC1 TD MULTIPLIER: 1.00**	Range: 0.00 to 600.00 in steps of 0.01
⇕	**PHASE TOC1 RESET: Instantaneous**	Range: Instantaneous, Timed
⇕	**PHASE TOC1 VOLTAGE RESTRAINT: Disabled**	Range: Disabled, Enabled
⇕	**PHASE TOC1 BLOCK A: Off**	Range: FlexLogic operand
⇕	**PHASE TOC1 BLOCK B: Off**	Range: FlexLogic operand
⇕	**PHASE TOC1 BLOCK C: Off**	Range: FlexLogic operand
⇕	**PHASE TOC1 TARGET: Self-reset**	Range: Self-reset, Latched, Disabled
⇧	**PHASE TOC1 EVENTS: Disabled**	Range: Disabled, Enabled

The phase time overcurrent element can provide a specified time-delay operating characteristic versus the applied current or be used as a simple definite time element. The phase current input quantities can be programmed as fundamental phasor magnitude or total waveform RMS magnitude as required by the application.

Two methods of resetting operation are available: "Timed" and "Instantaneous" (see the Inverse TOC Curve Characteristics section earlier for details on curve setup, trip times, and reset operation). When the element is blocked, the time accumulator resets according to the reset characteristic. For example, if the element reset characteristic is set to "Instantaneous" and the element is blocked, the time accumulator clears immediately.

The **PHASE TOC1 PICKUP** setting can be reduced dynamically by a voltage restraint feature (when enabled). This is accomplished via the multipliers (Mvr) corresponding to the phase-phase voltages of the voltage restraint characteristic curve (see the figure); the pickup level is calculated as Mvr times the **PHASE TOC1 PICKUP** setting. If the voltage restraint feature is disabled, the pickup level always remains at the setting value.

Figure 5-141: Phase time overcurrent voltage restraint characteristic

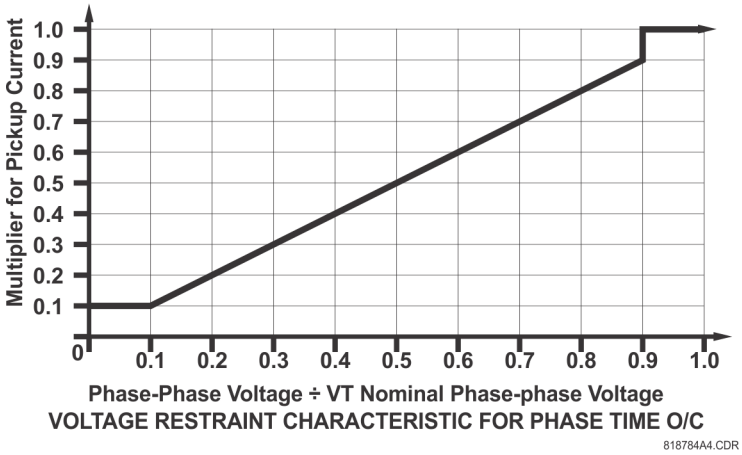

FUNCTION — This setting enables and disables the phase time overcurrent protection element.

SIGNAL SOURCE — Selects the signal source for the phase time overcurrent protection element.

INPUT — Selects how phase current input quantities are interpreted by the L90. Inputs can be selected as fundamental phasor magnitudes or total waveform RMS magnitudes as required by the application.

PICKUP — Specifies the phase time overcurrent pickup level in per-unit values.

CURVE — Selects the time inverse overcurrent curve style.

TD MULTIPLIER — When **TOC1 CURVE** setting is set to Definite Time, this setting defines time delay to element pickup. When **TOC1 CURVE** setting is set to any inverse time curve, this setting defines inverse curve multiplier, used in the chosen curve equation.

RESET — The "Instantaneous" reset method is intended for applications with other relays, such as most static relays, which set the energy capacity directly to zero when the current falls below the reset threshold. The "Timed" reset method can be used where the relay must coordinate with electromechanical relays.

VOLTAGE RESTRAINT — Enables and disables the phase time overcurrent voltage restraint feature.

BLOCK A — Assertion of the operand assigned to this setting blocks phase A of the phase time overcurrent element.

EVENTS — Enables and disables the logging of phase time overcurrent events in the sequence of events recorder.

Figure 5-142: Phase time overcurrent 1 logic

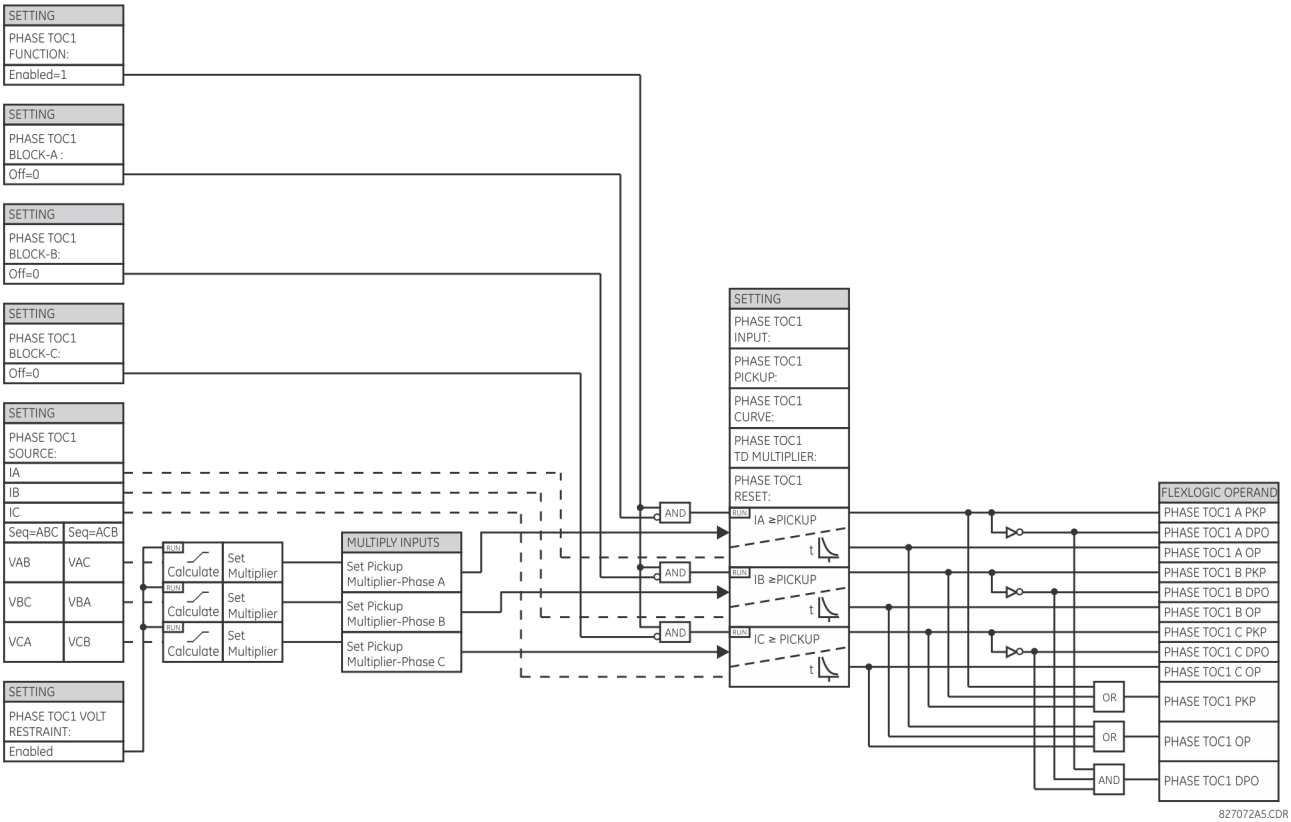

5.7.8.4 Phase instantaneous overcurrent (ANSI 50P, IEC PIOC)

SETTINGS ⇨⇩ GROUPED ELEMENTS ⇨ SETTING GROUP 1(6) ⇨ PHASE CURRENT ⇨ PHASE IOC 1(8)

■ **PHASE IOC 1** ■	⇔	**PHASE IOC1 FUNCTION: Disabled**	Range: Disabled, Enabled
	⇩	**PHASE IOC1 SIGNAL SOURCE: SRC 1**	Range: SRC 1, SRC 2, SRC 3, SRC 4
	⇩	**PHASE IOC1 PICKUP: 1.000 pu**	Range: 0.005 to 30.000 pu in steps of 0.001
	⇩	**PHASE IOC1 PICKUP DELAY: 0.00 s**	Range: 0.00 to 600.00 s in steps of 0.01
	⇩	**PHASE IOC1 RESET DELAY: 0.00 s**	Range: 0.00 to 600.00 s in steps of 0.01

⇕	**PHASE IOC1 BLOCK A: Off**	Range: FlexLogic operand
⇩		
⇕	**PHASE IOC1 BLOCK C: Off**	Range: FlexLogic operand
⇕	**PHASE IOC1 TARGET: Self-reset**	Range: Self-reset, Latched, Disabled
⇧	**PHASE IOC1 EVENTS: Disabled**	Range: Disabled, Enabled

The phase instantaneous overcurrent element can be used as an instantaneous element with no intentional delay or as a definite time element. The input current is the fundamental phasor magnitude.

FUNCTION — This setting enables and disables the phase instantaneous overcurrent protection element.

SOURCE — Selects the signal source for the phase instantaneous overcurrent protection element.

PICKUP — Specifies the phase instantaneous overcurrent pickup level in per-unit values.

DELAY —Delays the assertion of the PHASE IOC OP operands. It is used to achieve timing coordination with other elements and relays.

RESET DELAY — Specifies a delay for the reset of the phase instantaneous overcurrent element between the operate output state and the return to logic 0 after the input passes outside the defined pickup range. This setting is used to ensure that the relay output contacts are closed long enough to ensure reception by downstream equipment.

BLOCK A — Assertion of the operand assigned to this setting block's phase A of the phase instantaneous overcurrent element.

EVENTS — Enables and disables the logging of phase instantaneous overcurrent events in the sequence of events recorder.

Figure 5-143: Phase instantaneous overcurrent 1 logic

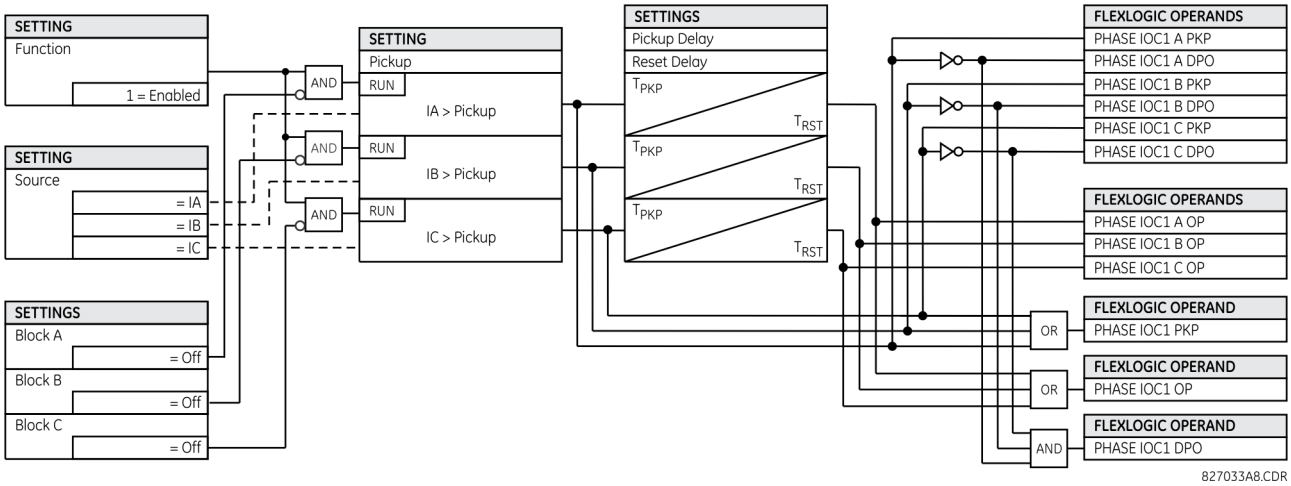

5.7.8.5 Phase directional overcurrent (ANSI 67P, IEC PDOC/PTOC)

SETTINGS ⇨⇩ GROUPED ELEMENTS ⇨ SETTING GROUP 1(6) ⇨ PHASE CURRENT ⇨ PHASE DIRECTIONAL 1(2)

■ **PHASE** ■ **DIRECTIONAL 1**	⇔	**PHASE DIR 1 FUNCTION: Disabled**	Range: Disabled, Enabled
	⇕	**PHASE DIR 1 SIGNAL SOURCE: SRC 1**	Range: SRC 1, SRC 2, SRC 3, SRC 4
	⇕	**PHASE DIR 1 BLOCK: Off**	Range: FlexLogic operand

⇕	**PHASE DIR 1 ECA: 30°**	Range: 0 to 359° in steps of 1
⇕	**PHASE DIR POL V1 THRESHOLD: 0.700 pu**	Range: 0.004 to 3.000 pu in steps of 0.001
⇕	**PHASE DIR 1 BLOCK WHEN V MEM EXP: No**	Range: No, Yes
⇕	**PHASE DIR 1 TARGET: Self-reset**	Range: Self-reset, Latched, Disabled
⇧	**PHASE DIR 1 EVENTS: Disabled**	Range: Disabled, Enabled

NOTE The TARGET setting is not user-selectable and forced to "Disabled". If Targets are required from directional elements, it can be achieved by assigning directional element output to a digital element, where targets selection can be used as required.

The phase directional elements (one for each of phases A, B, and C) determine the phase current flow direction for steady state and fault conditions and can be used to control the operation of the phase overcurrent elements via the **BLOCK** inputs of these elements.

Figure 5-144: Phase A directional polarization

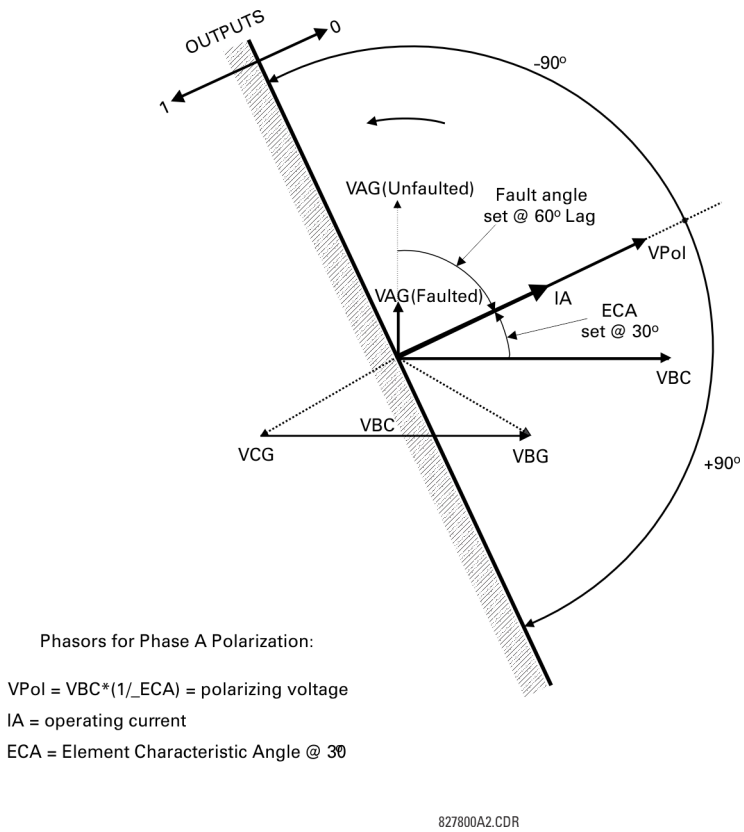

This element is intended to apply a block signal to an overcurrent element to prevent an operation when current is flowing in a particular direction. The direction of current flow is determined by measuring the phase angle between the current from the phase CTs and the line-line voltage from the VTs, based on the 90° or quadrature connection. If there is a requirement to supervise overcurrent elements for flows in opposite directions, such as can happen through a bus-tie breaker, two phase directional elements should be programmed with opposite element characteristic angle (ECA) settings.

To increase security for three phase faults very close to the VTs used to measure the polarizing voltage, a voltage memory feature is incorporated. This feature stores the polarizing voltage the moment before the voltage collapses, and uses it to determine direction. The voltage memory remains valid for one second after the voltage has collapsed.

The main component of the phase directional element is the phase angle comparator with two inputs: the operating signal (phase current) and the polarizing signal (the line voltage, shifted in the leading direction by the characteristic angle, ECA).

The table shows the operating and polarizing signals used for phase directional control.

Table 5-37: Operating and polarizing signals

Phase	Operating signal	Polarizing signal V_{pol}	
		ABC phase sequence	ACB phase sequence
A	angle of IA	angle of VBC × (1∠ECA)	angle of VCB × (1∠ECA)
B	angle of IB	angle of VCA × (1∠ECA)	angle of VAC × (1∠ECA)
C	angle of IC	angle of VAB × (1∠ECA)	angle of VBA × (1∠ECA)

Mode of operation

- When the function is "Disabled" or the operating current is below 5% × CT nominal, the element output is logic "0"
- When the function is "Enabled," the operating current is above 5% × CT nominal, and the polarizing voltage is above the **PRODUCT SETUP ⇨⇩ DISPLAY PROPERTIES ⇨⇩ VOLTAGE CUT-OFF LEVEL** value, the element output is dependent on the phase angle between the operating and polarizing signals:
  - The element output is logic "0" when the operating current is within polarizing voltage ±90°
  - For all other angles, the element output is logic "1"
- Once the voltage memory has expired, the phase overcurrent elements under directional control can be set to block or trip on overcurrent as follows:
  - When **BLOCK WHEN V MEM EXP** is set to "Yes," the directional element blocks the operation of any phase overcurrent element under directional control when voltage memory expires
  - When **BLOCK WHEN V MEM EXP** is set to "No," the directional element allows tripping of phase overcurrent elements under directional control when voltage memory expires

In all cases, directional blocking is permitted to resume when the polarizing voltage becomes greater than the polarizing voltage threshold.

Settings

PHASE DIR 1 FUNCTION — This setting enables and disables the phase directional overcurrent protection element.

PHASE DIR 1 SIGNAL SOURCE — This setting is used to select the source for the operating and polarizing signals. The operating current for the phase directional element is the phase current for the selected current source. The polarizing voltage is the line voltage from the phase VTs, based on the 90° or quadrature connection and shifted in the leading direction by the element characteristic angle (ECA).

PHASE DIR 1 BLOCK — Assertion of the operand assigned to this setting blocks operation of the phase directional overcurrent element.

PHASE DIR 1 ECA — This setting specifies the element characteristic angle, that is, the angle by which the polarizing voltage is shifted in the leading direction to achieve dependable operation. In the design of the UR-series elements, a block is applied to an element by asserting logic 1 at the blocking input. Program the phase directional overcurrent element using this setting so that the output is logic 1 for current in the non-tripping direction.

PHASE DIR 1 POL V THRESHOLD — This setting is used to establish the minimum level of voltage for which the phase angle measurement is healthy and reliable. Do not set this setting too low because the element can continue using the actual voltage already distorted by the fault instead of using healthy memory voltage—this can cause wrong directional discrimination.

PHASE DIR 1 BLOCK WHEN V MEM EXP — This setting is used to select the required operation upon expiration of voltage memory. When set to "Yes," the directional element blocks the operation of any phase overcurrent element under directional control, when voltage memory expires. When set to "No," the directional element allows tripping of phase overcurrent elements under directional control.

PHASE DIR 1 EVENTS — This setting enables and disables the logging of phase directional overcurrent events in the sequence of events recorder.

NOTE

The phase directional element responds to the forward load current. In the case of a following reverse fault, the element needs some time—in the order of 8 ms—to establish a blocking signal. Some protection elements, such as instantaneous overcurrent, respond to reverse faults before the blocking signal is established. Therefore, a coordination time of at least 10 ms must be added to all the instantaneous protection elements under the supervision of the phase directional element. If current reversal is of concern, a longer delay—in the order of 20 ms—is needed.

Figure 5-145: Phase directional logic

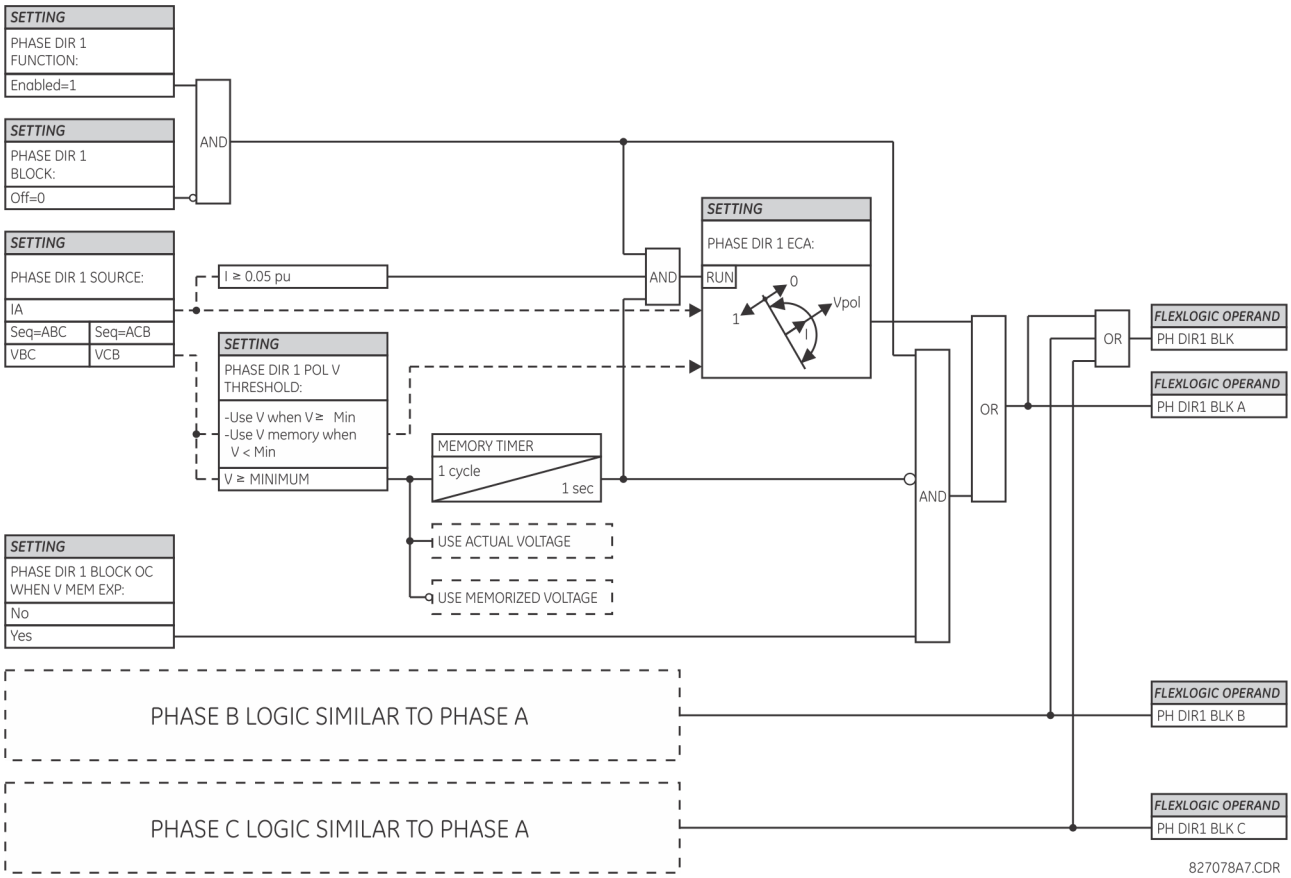

5.7.9 Neutral current

5.7.9.1 Menu

SETTINGS ⇨⇩ GROUPED ELEMENTS ⇨ SETTING GROUP 1(6) ⇨⇩ NEUTRAL CURRENT

■ NEUTRAL CURRENT ■	⇔	■ NEUTRAL TOC 1 ■	See below

⇩

⇕	■ NEUTRAL TOC 6 ■	
⇕	■ NEUTRAL IOC 1 ■	See page 5-270
	⇩	
⇕	■ NEUTRAL IOC 8 ■	
⇕	■ NEUTRAL ■ DIRECTIONAL OC1	See page 5-271
⇧	■ NEUTRAL ■ DIRECTIONAL OC2	

5.7.9.2 Neutral time overcurrent (ANSI 51N, IEC PTOC)

SETTINGS ⇨⇩ GROUPED ELEMENTS ⇨ SETTING GROUP 1(6) ⇨⇩ NEUTRAL CURRENT ⇨ NEUTRAL TOC1(6)

■ NEUTRAL TOC 1 ■	⇔	NEUTRAL TOC1 FUNCTION: Disabled	Range: Disabled, Enabled
	⇕	NEUTRAL TOC1 SIGNAL SOURCE: SRC 1	Range: SRC 1, SRC 2, SRC 3, SRC 4
	⇕	NEUTRAL TOC1 INPUT: Phasor	Range: Phasor, RMS
	⇕	NEUTRAL TOC1 PICKUP: 1.000 pu	Range: 0.020 to 30.000 pu in steps of 0.001
	⇕	NEUTRAL TOC1 CURVE: IEEE Mod Inv	Range: see Overcurrent Curve Types table
	⇕	NEUTRAL TOC1 TD MULTIPLIER: 1.00	Range: 0.00 to 600.00 in steps of 0.01
	⇕	NEUTRAL TOC1 RESET: Instantaneous	Range: Instantaneous, Timed
	⇕	NEUTRAL TOC1 BLOCK: Off	Range: FlexLogic operand
	⇕	NEUTRAL TOC1 TARGET: Self-reset	Range: Self-reset, Latched, Disabled
	⇧	NEUTRAL TOC1 EVENTS: Disabled	Range: Disabled, Enabled

The neutral time overcurrent element can provide a desired time-delay operating characteristic versus the applied current or be used as a simple definite time element. The neutral current input value is a quantity calculated as 3I0 from the phase currents and can be programmed as fundamental phasor magnitude or total waveform RMS magnitude as required by the application.

Two methods of resetting operation are available: “Timed” and “Instantaneous” (see the Inverse TOC Curve Characteristics section for details on curve setup, trip times, and reset operation). When the element is blocked, the time accumulator resets according to the reset characteristic. For example, if the element reset characteristic is set to “Instantaneous” and the element is blocked, the time accumulator clears immediately.

NEUTRAL TOC1 FUNCTION — This setting enables and disables the neutral time overcurrent protection element.

NEUTRAL TOC1 SIGNAL SOURCE — This setting selects the signal source for the neutral time overcurrent protection element.

NEUTRAL TOC1 INPUT — This setting selects how neutral current input quantities are interpreted by the L90. Inputs can be selected as fundamental phasor magnitudes or total waveform RMS magnitudes as required by the application.

NEUTRAL TOC1 PICKUP — This setting specifies the neutral time overcurrent pickup level in per-unit values.

NEUTRAL TOC1 CURVE — This setting selects the inverse time overcurrent curve style.

NEUTRAL TOC1 TD MULTIPLIER — This setting specifies a multiple of the base curve shape specified by the **CURVE** setting. Programming this value to zero results in an instantaneous response to all current levels above pickup.

NEUTRAL TOC1 RESET — The "Instantaneous" reset method is intended for applications with other relays, such as most static relays, which set the energy capacity directly to zero when the current falls below the reset threshold. The "Timed" reset method can be used where the relay must coordinate with electromechanical relays.

NEUTRAL TOC1 BLOCK — Assertion of the operand assigned to this setting blocks operation of the neutral time overcurrent element.

NEUTRAL TOC1 EVENTS — This setting enables and disables the logging of neutral time overcurrent events in the sequence of events recorder.

Figure 5-146: Neutral time overcurrent 1 logic

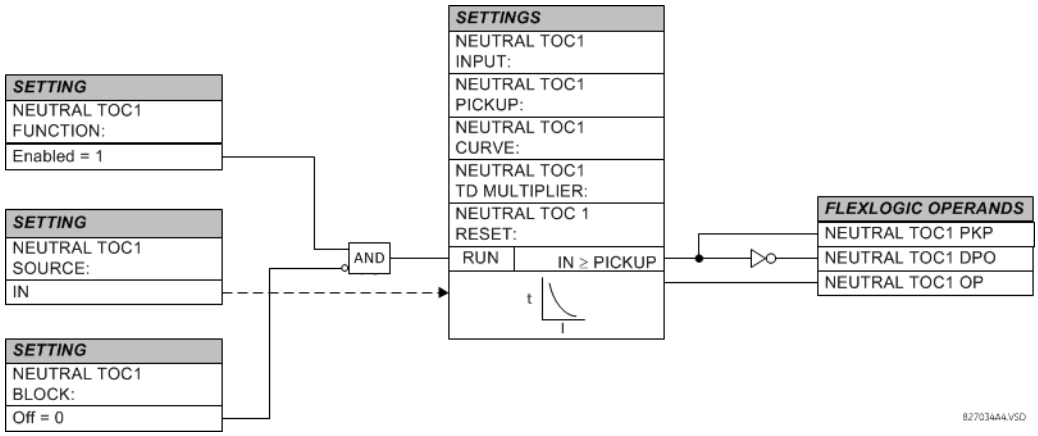

5.7.9.3 Neutral instantaneous overcurrent (ANSI 50N, IEC PIOC)

SETTINGS ⇨⇩ GROUPED ELEMENTS ⇨ SETTING GROUP 1(6) ⇨⇩ NEUTRAL CURRENT ⇨⇩ NEUTRAL IOC1(8)

■ NEUTRAL IOC 1 ■	⇔	**NEUTRAL IOC1 FUNCTION: Disabled**	Range: Disabled, Enabled
	⇩	**NEUTRAL IOC1 SIGNAL SOURCE: SRC 1**	Range: SRC 1, SRC 2, SRC 3, SRC 4
	⇩	**NEUTRAL IOC1 PICKUP: 1.000 pu**	Range: 0.020 to 30.000 pu in steps of 0.001
	⇩	**NEUTRAL IOC1 PICKUP DELAY: 0.00 s**	Range: 0.00 to 600.00 s in steps of 0.01
	⇩	**NEUTRAL IOC1 RESET DELAY: 0.00 s**	Range: 0.00 to 600.00 s in steps of 0.01
	⇩	**NEUTRAL IOC1 BLOCK: Off**	Range: FlexLogic operand
	⇩	**NEUTRAL IOC1 TARGET: Self-reset**	Range: Self-reset, Latched, Disabled
	⇩	**NEUTRAL IOC1 EVENTS: Disabled**	Range: Disabled, Enabled

The neutral instantaneous overcurrent element can be used as an instantaneous function with no intentional delay or as a definite time function. The element essentially responds to the magnitude of a neutral current fundamental frequency phasor calculated from the phase currents. A positive-sequence restraint is applied for better performance. A small portion (6.25%) of the positive-sequence current magnitude is subtracted from the zero-sequence current magnitude when forming the operating quantity of the element as follows:

$$I_{op} = 3 \times (|I_0| - K \times |I_1|) \text{ where } K = 1/16 \qquad \textbf{Eq. 5-23}$$

The positive-sequence restraint allows for more sensitive settings by counterbalancing spurious zero-sequence currents resulting from:

- System unbalances under heavy load conditions
- Transformation errors of current transformers (CTs) during double-line and three-phase faults
- Switch-off transients during double-line and three-phase faults

The positive-sequence restraint must be considered when testing for pickup accuracy and response time (multiple of pickup). The operating quantity depends on how test currents are injected into the relay, where single-phase injection is $I_{op} = 0.9375 \times I_{injected}$ and three-phase pure zero-sequence injection is $I_{op} = 3 \times I_{injected}$

NEUTRAL IOC1 FUNCTION — This setting enables and disables the neutral instantaneous overcurrent protection element.

NEUTRAL IOC1 SIGNAL SOURCE — This setting selects the signal source for the neutral instantaneous overcurrent protection element.

NEUTRAL IOC1 PICKUP — This setting specifies the neutral instantaneous overcurrent pickup level in per-unit values.

NEUTRAL IOC1 PICKUP DELAY — This setting delays the assertion of the NEUTRAL IOC OP operands. It is used to achieve timing coordination with other elements and relays.

NEUTRAL IOC1 RESET DELAY — This setting specifies a delay for the reset of the neutral instantaneous overcurrent element between the operate output state and the return to logic 0 after the input passes outside the defined pickup range. This setting is used to ensure that the relay output contacts are closed long enough to ensure reception by downstream equipment.a

NEUTRAL IOC1 BLOCK — Assertion of the operand assigned to this setting blocks operation of the neutral instantaneous overcurrent element.

NEUTRAL IOC1 EVENTS — This setting enables and disables the logging of neutral instantaneous overcurrent events in the sequence of events recorder.

5

Figure 5-147: Neutral IOC1 logic

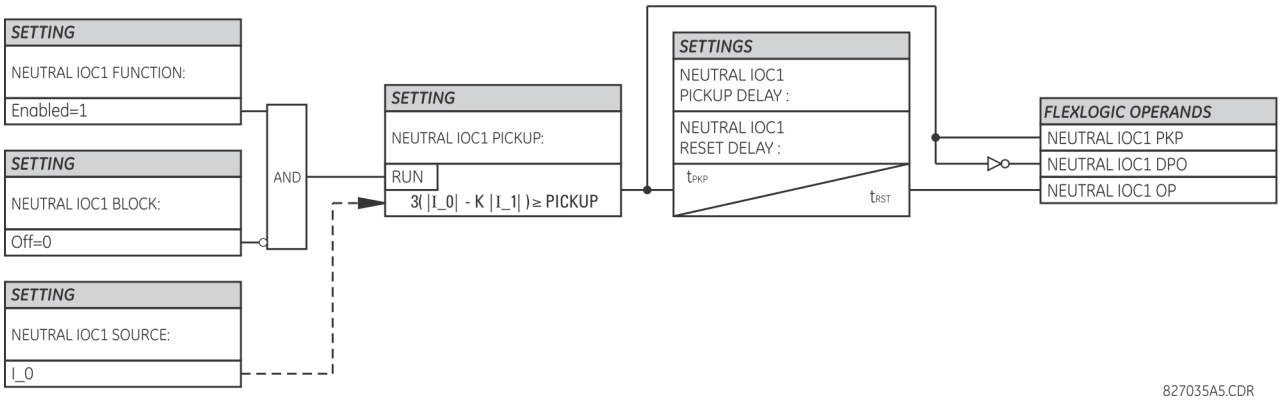

5.7.9.4 Neutral directional overcurrent (ANSI 67N, IEC PDEF/PTOC)

SETTINGS ⇨⇩ GROUPED ELEMENTS ⇨ SETTING GROUP 1(6) ⇨⇩ NEUTRAL CURRENT ⇨⇩ NEUTRAL DIRECTIONAL OC1(2)

■ NEUTRAL ■ DIRECTIONAL OC1	⇔	**NEUTRAL DIR OC1 FUNCTION: Disabled**	Range: Disabled, Enabled
	⇩	**NEUTRAL DIR OC 1 SOURCE: SRC 1**	Range: SRC 1, SRC 2, SRC 3, SRC 4
	⇩	**NEUTRAL DIR OC1 POLARIZING: Voltage**	Range: Voltage, Current, Dual, Dual-V, Dual-I
	⇩	**NEUTRAL DIR OC1 POL VOLT: Calculated V0**	Range: Calculated V0, Measured VX

⇕	**NEUTRAL DIR OC1 OP CURR: Calculated 3I0**	Range: Calculated 3I0, Measured IG
⇕	**NEUTRAL DIR OC1 POS-SEQ RESTRAINT: 0.063**	Range: 0.000 to 0.500 in steps of 0.001
⇕	**NEUTRAL DIR OC1 OFFSET: 0.00 Ω**	Range: 0.00 to 250.00 Ω in steps of 0.01
⇕	**NEUTRAL DIR OC1 FWD ECA: 75° Lag**	Range: –90 to 90° in steps of 1
⇕	**NEUTRAL DIR OC1 FWD LIMIT ANGLE: 90°**	Range: 40 to 90° in steps of 1
⇕	**NEUTRAL DIR OC1 FWD PICKUP: 0.050 pu**	Range: 0.006 to 30.000 pu in steps of 0.001
⇕	**NEUTRAL DIR OC1 REV LIMIT ANGLE: 90°**	Range: 40 to 90° in steps of 1
⇕	**NEUTRAL DIR OC1 REV PICKUP: 0.050 pu**	Range: 0.006 to 30.000 pu in steps of 0.001
⇕	**NEUTRAL DIR OC1 BLK: Off**	Range: FlexLogic operand
⇕	**NEUTRAL DIR OC1 TARGET: Self-reset**	Range: Self-reset, Latched, Disabled
⇧	**NEUTRAL DIR OC1 EVENTS: Disabled**	Range: Disabled, Enabled

5

The neutral directional overcurrent element provides both forward and reverse fault direction indications for the NEUTRAL DIR OC1 FWD and NEUTRAL DIR OC1 REV operands, respectively. The output operand is asserted if the magnitude of the operating current is above a pickup level (overcurrent unit) and the fault direction is seen as forward or reverse, respectively (directional unit).

The **overcurrent unit** responds to the magnitude of a fundamental frequency phasor of either the neutral current calculated from the phase currents or the ground current. There are separate pickup settings for the forward-looking and reverse-looking functions. If set to use the calculated 3I_0, the element applies a positive-sequence restraint for better performance: a small user-programmable portion of the positive-sequence current magnitude is subtracted from the zero-sequence current magnitude when forming the operating quantity.

$$I_{op} = 3 \times (|I_0| - K \times |I_1|) \qquad \textbf{Eq. 5-24}$$

The positive-sequence restraint allows for more sensitive settings by counterbalancing spurious zero-sequence currents resulting from

- System unbalances under heavy load conditions
- Transformation errors of current transformers (CTs) during double-line and three-phase faults
- Switch-off transients during double-line and three-phase faults

The positive-sequence restraint must be considered when testing for pickup accuracy and response time (multiple of pickup). The operating quantity depends on the way the test currents are injected into the relay (single-phase injection: $I_{op} = (1 - K) \times I_{injected}$; three-phase pure zero-sequence injection: $I_{op} = 3 \times I_{injected}$.

The positive-sequence restraint is removed for low currents. If the positive-sequence current is below 0.8 pu, the restraint is removed by changing the constant K to zero. This facilitates better response to high-resistance faults when the unbalance is very small and there is no danger of excessive CT errors as the current is low.

The **directional unit** uses the zero-sequence current (I_0) or ground current (IG) for fault direction discrimination and can be programmed to use either zero-sequence voltage ("Calculated V0" or "Measured VX"), ground current (IG), or both for polarizing. The zero-sequence current (I_0) must be greater than the **PRODUCT SETUP ⇨⇩ DISPLAY PROPERTIES ⇨⇩ CURRENT CUT-OFF LEVEL** setting value and IG must be greater than 0.05 pu to be validated as the operating quantity for directional current. The following tables define the neutral directional overcurrent element. V_0 is the zero-sequence voltage, I_0 is the zero-sequence current, ECA is the element characteristic angle, and IG is the ground current.

Table 5-38: Quantities for "calculated 3I0" configuration

Directional unit				Overcurrent unit
Polarizing mode	**Direction**	**Compared phasors**		
Voltage	Forward	–V_0 + Z_offset × I_0	I_0 × 1∠ECA	I_{op} = 3 × (|I_0| – K × |I_1|) if |I_1| > 0.8 pu I_{op} = 3 × (|I_0|) if |I_1| ≤ 0.8 pu
	Reverse	–V_0 + Z_offset × I_0	–I_0 × 1∠ECA	
Current	Forward	IG	I_0	
	Reverse	IG	–I_0	
Dual, Dual-V, Dual-I	Forward	–V_0 + Z_offset × I_0	I_0 × 1∠ECA	
		or		
		IG	I_0	
	Reverse	–V_0 + Z_offset × I_0	–I_0 × 1∠ECA	
		or		
		IG	–I_0	

Table 5-39: Quantities for "measured IG" configuration

Directional unit				Overcurrent unit
Polarizing mode	**Direction**	**Compared phasors**		
Voltage	Forward	–V_0 + Z_offset × IG/3	IG × 1∠ECA	I_{op} = |IG|
	Reverse	–V_0 + Z_offset × IG/3	–IG × 1∠ECA	

where:

$$V_0 = \frac{1}{3}(VAG + VBG + VCG) = \text{zero sequence voltage}$$

$$I_0 = \frac{1}{3}IN = \frac{1}{3}(IA + IB + IC) = \text{zero sequence current}$$

ECA = element characteristic angle
IG = ground current
Z_offset is the offset impedance, for which magnitude is the OFFSET setting and angle is the FWD ECA

When **NEUTRAL DIR OC1 POL VOLT** is set to "Measured VX," one-third of this voltage is used in place of V_0. The following figure explains the usage of the voltage polarized directional unit of the element.

The figure shows the voltage-polarized phase angle comparator characteristics for a phase A to ground fault, with:

- ECA = 90° (element characteristic angle = centerline of operating characteristic)
- FWD LA = 80° (forward limit angle = the ± angular limit with the ECA for operation)
- REV LA = 80° (reverse limit angle = the ± angular limit with the ECA for operation)

The element incorporates a current reversal logic. If the reverse direction is indicated for at least 1.25 of a power system cycle, the prospective forward indication is delayed by 1.5 of a power system cycle. The element is designed to emulate an electromechanical directional device. Larger operating and polarizing signals results in faster directional discrimination bringing more security to the element operation.

The forward-looking function is designed to be more secure as compared to the reverse-looking function, and therefore is to be used for the tripping direction. The reverse-looking function is designed to be faster as compared to the forward-looking function and is to be used for the blocking direction. This allows for better protection coordination.

Take the bias into account when using the neutral directional overcurrent element to directionalize other protection elements.

Figure 5-148: Neutral directional voltage-polarized characteristics

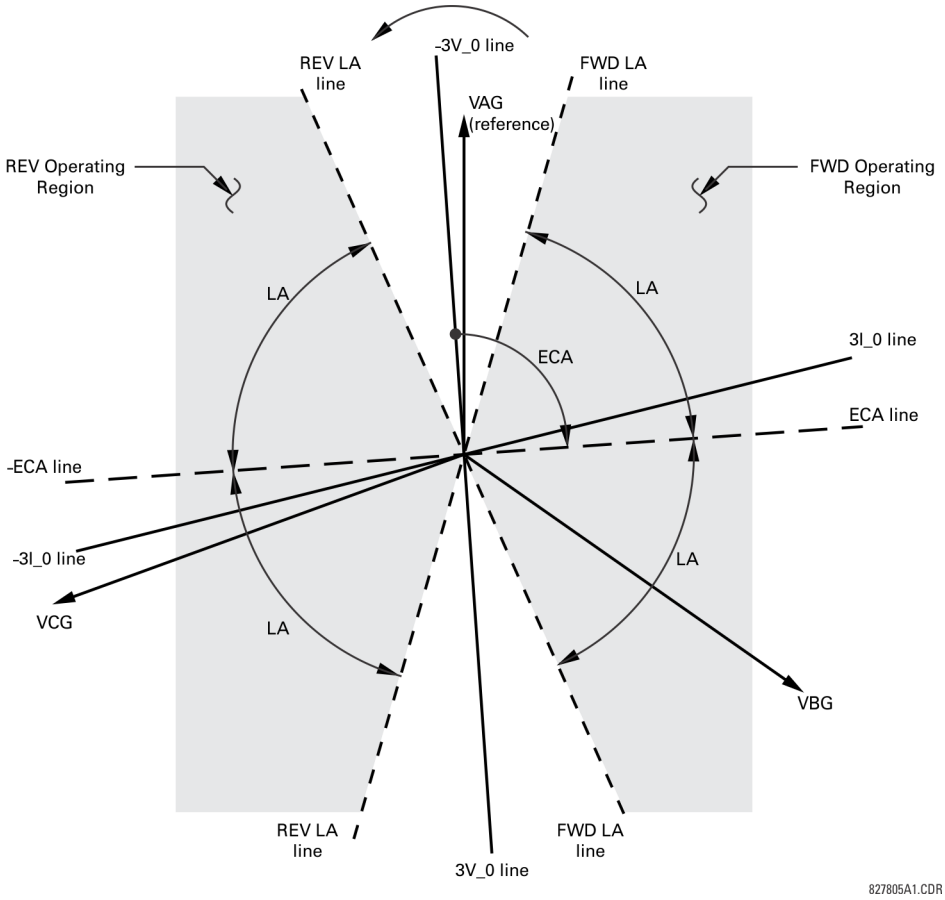

NEUTRAL DIR OC1 POLARIZING — This setting selects the polarizing mode for the directional unit.

- If "Voltage" polarizing is selected, the element uses the zero-sequence voltage angle for polarization. The user can use either the zero-sequence voltage V_0 calculated from the phase voltages, or the zero-sequence voltage supplied externally as the auxiliary voltage V_X, both from the **NEUTRAL DIR OC1 SOURCE**.

  The calculated V_0 can be used as polarizing voltage only if the voltage transformers are connected in Wye. The auxiliary voltage can be used as the polarizing voltage provided **SYSTEM SETUP ⇨ AC INPUTS ⇨⇩ VOLTAGE BANK ⇨⇩ AUXILIARY VT CONNECTION** is set to "Vn" and the auxiliary voltage is connected to a zero-sequence voltage source (such as broken delta connected secondary of VTs).

  The zero sequence voltage V_0 must be greater than **PRODUCT SETUP ⇨⇩ DISPLAY PROPERTIES ⇨⇩ VOLTAGE CUT-OFF LEVEL** to be validated for use as polarizing signal. Additionally, when offset impedance is applied and zero-sequence current is above 0.2 pu, compensated zero-sequence voltage -V_0 + Z_offset x I_0 has to be above 0.02 pu in order to discriminate fault direction; otherwise when zero-sequence current is less than 0.2 pu, -V_0 is then used as the polarizing signal. If the polarizing signal is invalid, neither forward nor reverse indication is given.

- If "Current" polarizing is selected, the element uses the ground current angle connected externally and configured under **NEUTRAL OC1 SOURCE** for polarization. The ground CT must be connected between the ground and neutral point of an adequate local source of ground current. The ground current must be greater than 0.05 pu to be validated as a polarizing signal. If the polarizing signal is not valid, neither forward nor reverse indication is given. In addition, the zero-sequence current (I_0) must be greater than the **PRODUCT SETUP ⇨⇩ DISPLAY PROPERTIES ⇨⇩ CURRENT CUT-OFF LEVEL** setting value.

  For a choice of current polarizing, it is recommended that the polarizing signal be analyzed to ensure that a known direction is maintained irrespective of the fault location. For example, if using an autotransformer neutral current as a polarizing source, ensure that a reversal of the ground current does not occur for a high-side fault. Assume that the

low-side system impedance is minimal when checking for this condition. A similar situation arises for a wye/delta/wye transformer, where current in one transformer winding neutral can reverse when faults on both sides of the transformer are considered.

- If “Dual” polarizing is selected, the element performs both directional comparisons as described. A given direction is confirmed if either voltage or current comparators indicate so. If a conflicting (simultaneous forward and reverse) indication occurs, the forward direction overrides the reverse direction.
- If "Dual-V" polarizing is selected, "Voltage" polarizing is performed and "Current" polarizing is ignored if the voltage polarizing signal is valid; otherwise "Current" polarizing is performed if the current polarizing signal is valid. If neither of them is valid, neither forward nor reverse indication is given.
- If "Dual-I" polarizing is selected, "Current" polarizing is performed and "Voltage" polarizing is ignored if the current polarizing signal is valid; otherwise "Voltage" polarizing is performed if the voltage polarizing signal is valid. If neither of them is valid, neither forward nor reverse indication is given.

NEUTRAL DIR OC1 POL VOLT — Selects the polarizing voltage used by the directional unit when "Voltage," "Dual," "Dual-V," or "Dual-I" polarizing mode is set. The polarizing voltage can be programmed to be either the zero-sequence voltage calculated from the phase voltages ("Calculated V0") or supplied externally as an auxiliary voltage ("Measured VX").

NEUTRAL DIR OC1 OP CURR — This setting indicates whether the 3I_0 current calculated from the phase currents, or the ground current is used by this protection. This setting acts as a switch between the neutral and ground modes of operation (ANSI devices 67N and 67G). If set to “Calculated 3I0,” the element uses the phase currents and applies the positive-sequence restraint. If set to “Measured IG,” the element uses ground current supplied to the ground CT of the CT bank configured as **NEUTRAL DIR OC1 SOURCE**. If this setting is “Measured IG,” then the **NEUTRAL DIR OC1 POLARIZING** setting must be “Voltage”, as it is not possible to use the ground current as an operating and polarizing signal simultaneously. IG current has to be above 0.05 pu to be used as operate quantity.

NEUTRAL DIR OC1 POS-SEQ RESTRAINT — This setting controls the amount of the positive-sequence restraint. Set it to 0.063 for backward compatibility with firmware revision 3.40 and older. Set it to zero to remove the restraint. Set it higher if large system unbalances or poor CT performance are expected.

NEUTRAL DIR OC1 OFFSET — This setting specifies the offset impedance used by this protection. The primary application for the offset impedance is to guarantee correct identification of fault direction on series compensated lines. In regular applications, the offset impedance ensures proper operation even if the zero-sequence voltage at the relaying point is very small. If this is the intent, the offset impedance is not to be larger than the zero-sequence impedance of the protected circuit. Practically, it shall be several times smaller. Enter the offset impedance in secondary ohms. See the Application of Settings chapter for information on how to calculate this setting.

NEUTRAL DIR OC1 FWD ECA — This setting defines the characteristic angle (ECA) for the forward direction in the "Voltage" polarizing mode. The "Current" polarizing mode uses a fixed ECA of 0°. The ECA in the reverse direction is the angle set for the forward direction shifted by 180°.

NEUTRAL DIR OC1 FWD LIMIT ANGLE — This setting defines a symmetrical (in both directions from the ECA) limit angle for the forward direction.

NEUTRAL DIR OC1 FWD PICKUP — This setting defines the pickup level for the overcurrent unit of the element in the forward direction. When selecting this setting, keep in mind that the design uses a positive-sequence restraint technique for the “Calculated 3I0” mode of operation.

NEUTRAL DIR OC1 REV LIMIT ANGLE — This setting defines a symmetrical (in both directions from the ECA) limit angle for the reverse direction.

NEUTRAL DIR OC1 REV PICKUP — This setting defines the pickup level for the overcurrent unit of the element in the reverse direction. When selecting this setting, keep in mind that the design uses a positive-sequence restraint technique for the “Calculated 3I0” mode of operation.

Figure 5-149: Neutral directional overcurrent logic

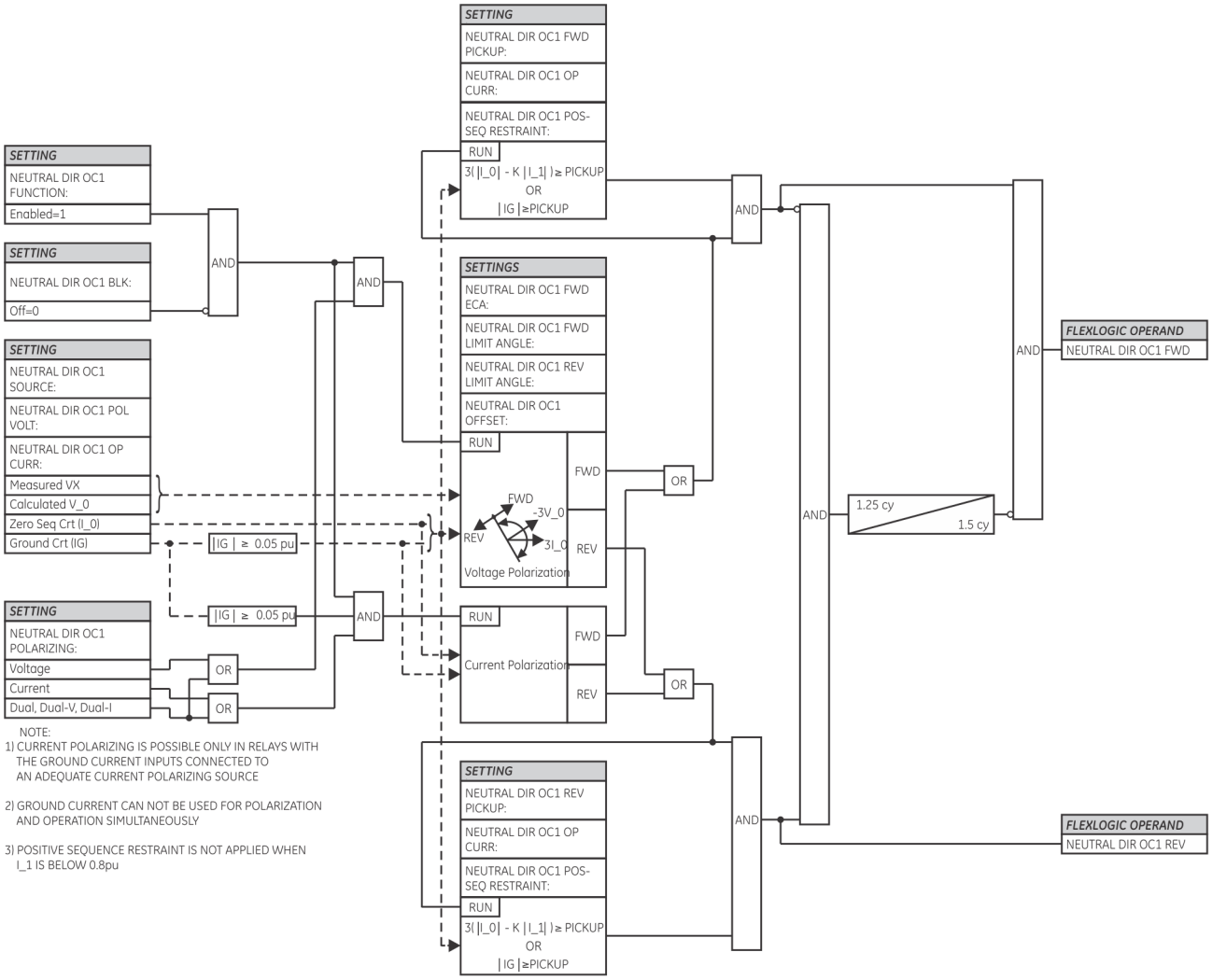

NOTE:
1) CURRENT POLARIZING IS POSSIBLE ONLY IN RELAYS WITH THE GROUND CURRENT INPUTS CONNECTED TO AN ADEQUATE CURRENT POLARIZING SOURCE

2) GROUND CURRENT CAN NOT BE USED FOR POLARIZATION AND OPERATION SIMULTANEOUSLY

3) POSITIVE SEQUENCE RESTRAINT IS NOT APPLIED WHEN I_1 IS BELOW 0.8pu

5.7.10 Wattmetric ground fault

5.7.10.1 Wattmetric zero-sequence directional (ANSI 32N, IEC PSDE)

SETTINGS ⇨⇩ GROUPED ELEMENTS ⇨ SETTING GROUP 1(6) ⇨ WATTMETRIC... ⇨⇩ WATTMETRIC GROUND FAULT 1(2)

■ WATTMETRIC ■ GROUND FAULT 1	⇔	**WATTMETRIC GND FLT 1 FUNCTION: Disabled**	Range: Disabled, Enabled
	⇕	**WATTMETRIC GND FLT 1 SOURCE: SRC 1**	Range: SRC 1, SRC 2, SRC 3, SRC 4
	⇕	**WATTMETRIC GND FLT 1 VOLT: Calculated VN**	Range: Calculated VN, Measured VX
	⇕	**WATTMETRIC GND FLT 1 OV PKP: 0.20 pu**	Range: 0.02 to 3.00 pu in steps of 0.01
	⇕	**WATTMETRIC GND FLT 1 CURR: Calculated IN**	Range: Calculated IN, Measured IG
	⇕	**WATTMETRIC GND FLT 1 OC PKP: 0.060 pu**	Range: 0.002 to 30.000 pu in steps of 0.001

⇕	**WATTMETRIC GND FLT 1 OC PKP DEL: 0.20 s**	Range: 0.00 to 600.00 s in steps of 0.01
⇕	**WATTMETRIC GND FLT 1 PWR PKP: 0.100 pu**	Range: 0.001 to 1.200 pu in steps of 0.001
⇕	**WATTMETRIC GND FLT 1 REF PWR: 0.500 pu**	Range: 0.001 to 1.200 pu in steps of 0.001
⇕	**WATTMETRIC GND FLT 1 ECA: 0° Lag**	Range: 0 to 360° Lag in steps of 1
⇕	**WATTMETRIC GND FLT 1 PWR PKP DEL: 0.20 s**	Range: 0.00 to 600.00 s in steps of 0.01
⇕	**WATTMETRIC GND FLT 1 CURVE: Definite Time**	Range: Definite Time, Inverse, FlexCurves A through D
⇕	**WATTMETRIC GND FLT 1 MULTIPLIER: 1.00 s**	Range: 0.01 to 2.00 s in steps of 0.01
⇕	**WATT GND FLT 1 BLK: Off**	Range: FlexLogic operand
⇕	**WATTMETRIC GND FLT 1 TARGET: Self-reset**	Range: Self-reset, Latched, Disabled
⇧	**WATTMETRIC GND FLT 1 EVENTS: Disabled**	Range: Disabled, Enabled

The wattmetric zero-sequence directional element responds to power derived from zero-sequence voltage and current in a direction specified by the element characteristic angle. The angle can be set within all four quadrants, and the power can be active or reactive. Therefore, the element can be used to sense either forward or reverse ground faults in either inductive, capacitive, or resistive networks. The inverse time characteristic allows time coordination of elements across the network.

Typical applications include ground fault protection in solidly grounded transmission networks, grounded/ungrounded/resistor-grounded/resonant-grounded distribution networks, or for directionalizing other non-directional ground elements.

WATTMETRIC GND FLT 1 VOLT — The element uses neutral voltage (that is, three times the zero-sequence voltage). This setting allows selecting between the internally calculated neutral voltage or the externally supplied voltage (broken delta VT connected to the auxiliary channel bank of the relay). When the latter selection is made, the auxiliary channel must be identified by the user as a neutral voltage under the VT bank settings. This element operates when the auxiliary voltage is configured as neutral.

WATTMETRIC GND FLT 1 OV PKP — This setting specifies the minimum zero sequence voltage supervising the directional power measurement. Set this threshold higher than possible unbalance during normal operation of the system. Typically, this setting is at 0.1 to 0.2 pu for the ungrounded or resonant grounded systems and at 0.05 to 0.1 pu for solidly or resistor-grounded systems. When using externally supplied voltage via the auxiliary voltage channel, 1 pu is the nominal voltage of this channel as per VT bank settings. When using internally calculated neutral voltage, 1 pu is the nominal phase to ground voltage as per the VT bank settings.

WATTMETRIC GND FLT 1 CURR — The element responds to the neutral current (that is, three times zero-sequence current), either calculated internally from the phase currents or supplied externally via the ground CT input from more accurate sources such as the core balanced CT. This setting allows selecting the source of the operating current.

WATTMETRIC GND FLT 1 OC PKP — This setting specifies the current supervision level for the measurement of the zero-sequence power.

WATTMETRIC GND FLT 1 OC PKP DEL — This setting specifies delay for the overcurrent portion of this element. The delay applies to the WATTMETRIC 1 PKP operand driven from the overcurrent condition.

WATTMETRIC GND FLT 1 PWR PKP — This setting specifies the operating point of the element. A value of 1 pu is a product of the 1 pu voltage as specified for the overvoltage condition of this element, and 1 pu current as specified for the overcurrent condition of this element.

WATTMETRIC GND FLT 1 REF PWR — This setting is used to calculate the inverse time characteristic delay (defined by S_{ref} in the following equations). A value of 1 pu represents the product of a 1 pu voltage (as specified in the overvoltage condition for this element) and a 1 pu current (as specified in the overcurrent condition for this element.

WATTMETRIC GND FLT 1 ECA — This setting adjusts the maximum torque angle of the element. The operating power is calculated as:

$$S_op = Re(V_n(I_n \times 1\angle ECA)^*) \quad \textbf{Eq. 5-25}$$

where

* indicates complex conjugate

By varying the element characteristic angle (ECA), the element can be made to respond to forward or reverse direction in inductive, resistive, or capacitive networks as shown in the Wattmetric Characteristic Angle Response diagram.

WATTMETRIC GND FLT 1 PWR PKP DEL — This setting defines a definite time delay before the inverse time characteristic is activated. If the curve selection is set as "Definite Time", the element operates after this security time delay. If the curve selection is "Inverse" or one of the FlexCurves, the element uses both the definite and inverse time timers simultaneously. The definite time timer, specified by this setting, is used and when expires it releases the inverse time timer for operation (torque control).

WATTMETRIC GND FLT 1 CURVE — Choose one of three methods to delay the operate signal once all conditions are met to discriminate fault direction.

The "Definite Time" selection allows for a fixed time delay defined by the **WATTMETRIC GND FLT 1 PWR PKP DEL** setting.

The "Inverse" selection allows for inverse time characteristics delay defined by the following formula:

$$t = m \times \frac{S_{ref}}{S_{op}} \quad \textbf{Eq. 5-26}$$

5

where

m is a multiplier defined by the multiplier setting
S_{ref} is the multiplier setting
S_{op} is the operating power at the time

This timer starts after the definite time timer expires.

The four FlexCurves allow for custom user-programmable time characteristics. When working with FlexCurves, the element uses the operate to pickup ratio, and the multiplier setting is not applied:

$$t = \text{FlexCurve}\left(\frac{S_{op}}{S_{ref}}\right) \quad \textbf{Eq. 5-27}$$

Again, the FlexCurve timer starts after the definite time timer expires.

Figure 5-150: Wattmetric characteristic angle response

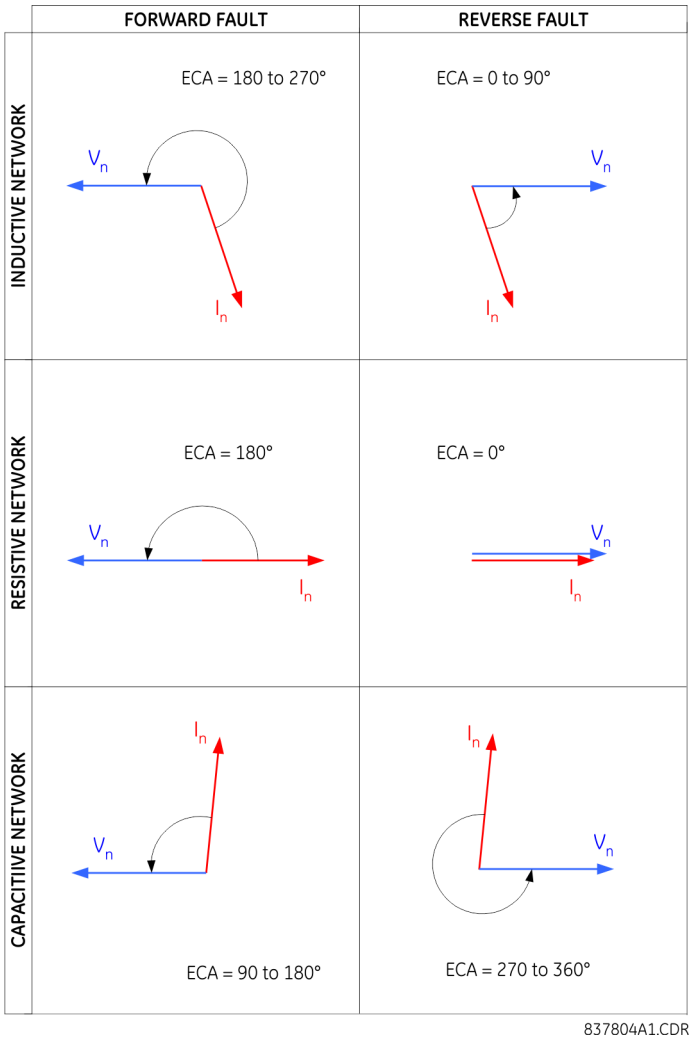

WATTMETRIC GND FLT 1 MULTIPLIER — This setting is applicable if the **WATTMETRIC GND FLT 1 CURVE** is set to Inverse and defines the multiplier factor for the inverse time delay.

Figure 5-151: Wattmetric zero-sequence directional logic

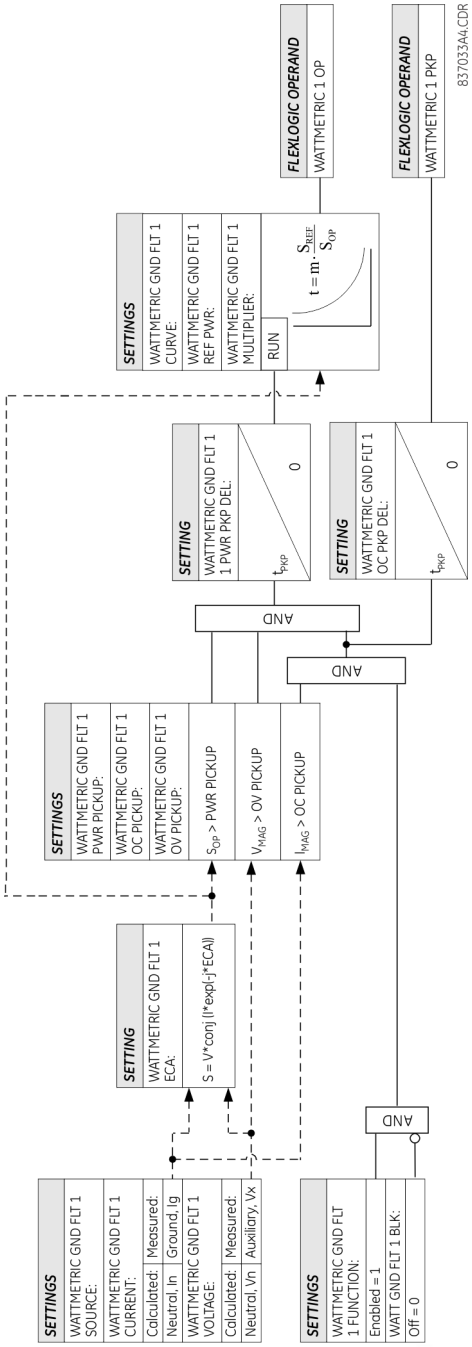

5.7.11 Ground current

5.7.11.1 Menu

SETTINGS ⇨⇩ GROUPED ELEMENTS ⇨ SETTING GROUP 1(6) ⇨⇩ GROUND CURRENT

■ GROUND CURRENT ■	⇔	■ GROUND TOC1 ■	See below

⇩

```
⇕ ■ GROUND TOC4
  ■
⇕ ■ GROUND IOC1                    See page 5-282
  ■
        ⇩
⇕ ■ GROUND IOC8
  ■
⇕ ■ RESTRICTED GROUND              See page 5-283
  ■ FAULT1
        ⇩
⇧ ■ RESTRICTED GROUND
  ■ FAULT4
```

5.7.11.2 Ground time overcurrent (ANSI 51G, IEC PTOC)

SETTINGS ⇨⇩ GROUPED ELEMENTS ⇨ SETTING GROUP 1(6) ⇨⇩ GROUND CURRENT ⇨ GROUND TOC1(4)

```
■ GROUND TOC1
■
```

⇔	GROUND TOC1 FUNCTION: Disabled	Range: Disabled, Enabled
⇕	GROUND TOC1 SIGNAL SOURCE: SRC 1	Range: SRC 1, SRC 2, SRC 3, SRC 4
⇕	GROUND TOC1 INPUT: Phasor	Range: Phasor, RMS
⇕	GROUND TOC1 PICKUP: 1.000 pu	Range: 0.020 to 30.000 pu in steps of 0.001
⇕	GROUND TOC1 CURVE: IEEE Mod Inv	Range: see the Overcurrent Curve Types table
⇕	GROUND TOC1 TD MULTIPLIER: 1.00	Range: 0.00 to 600.00 in steps of 0.01
⇕	GROUND TOC1 RESET: Instantaneous	Range: Instantaneous, Timed
⇕	GROUND TOC1 BLOCK: Off	Range: FlexLogic operand
⇕	GROUND TOC1 TARGET: Self-reset	Range: Self-reset, Latched, Disabled
⇧	GROUND TOC1 EVENTS: Disabled	Range: Disabled, Enabled

This element can provide a required time-delay operating characteristic versus the applied current or be used as a simple definite time element. The ground current input value is the quantity measured by the ground input CT and is the fundamental phasor or RMS magnitude. Two methods of resetting operation are available: "Timed" and "Instantaneous" (see the Inverse TOC Curve Characteristics section for details). When the element is blocked, the time accumulator resets according to the reset characteristic. For example, if the element reset characteristic is set to "Instantaneous" and the element is blocked, the time accumulator clears immediately.

GROUND TOC1 FUNCTION — This setting enables and disables the ground time overcurrent protection element.

GROUND TOC1 SIGNAL SOURCE — This setting selects the signal source for the ground time overcurrent protection element.

GROUND TOC1 INPUT — This setting selects how ground current input quantities are interpreted by the L90. Inputs can be selected as fundamental phasor magnitudes or total waveform RMS magnitudes as required by the application.

GROUND TOC1 PICKUP — This setting specifies the ground time overcurrent pickup level in per-unit values.

GROUND TOC1 CURVE — This setting selects the inverse time overcurrent curve style.

GROUND TOC1 TD MULTIPLIER — This setting specifies a multiple of the base curve shape specified by the **CURVE** setting. Programming this value to zero results in an instantaneous response to all current levels above pickup.

GROUND TOC1 RESET — The "Instantaneous" reset method is intended for applications with other relays, such as most static relays, which set the energy capacity directly to zero when the current falls below the reset threshold. The "Timed" reset method can be used where the relay must coordinate with electromechanical relays.

GROUND TOC1 BLOCK — Assertion of the operand assigned to this setting blocks operation of the ground time overcurrent element.

GROUND TOC1 EVENTS — This setting enables and disables the logging of ground time overcurrent events in the sequence of events recorder.

NOTE

These elements measure the current that is connected to the ground channel of a CT/VT module. The conversion range of a standard channel is from 0.02 to 46 times the CT rating.

Figure 5-152: Ground TOC1 logic

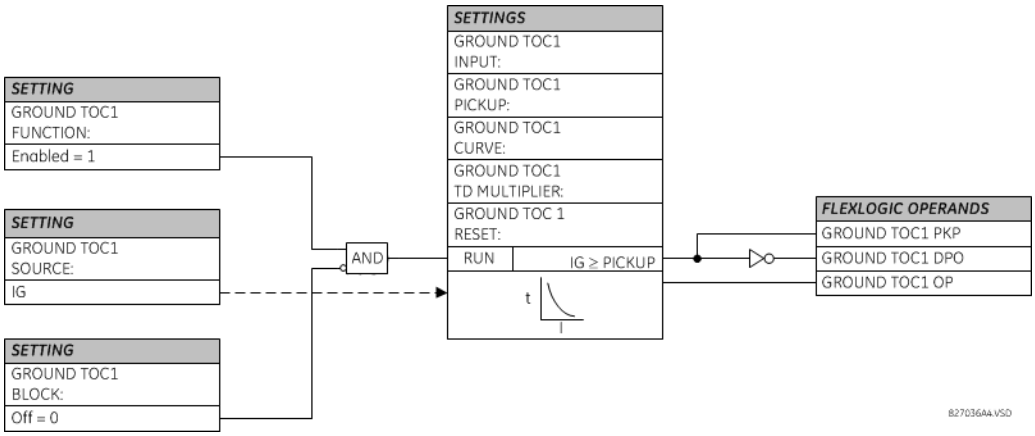

5.7.11.3 Ground instantaneous overcurrent (ANSI 50G, IEC PIOC)

SETTINGS ⇨⇩ GROUPED ELEMENTS ⇨ SETTING GROUP 1(6) ⇨⇩ GROUND CURRENT ⇨⇩ GROUND IOC1(8)

■ **GROUND IOC1** ■	⇔	**GROUND IOC1 FUNCTION: Disabled**	Range: Disabled, Enabled
	⇩	**GROUND IOC1 SIGNAL SOURCE: SRC 1**	Range: SRC 1, SRC 2, SRC 3, SRC 4
	⇩	**GROUND IOC1 PICKUP: 1.000 pu**	Range: 0.020 to 30.000 pu in steps of 0.001
	⇩	**GROUND IOC1 PICKUP DELAY: 0.00 s**	Range: 0.00 to 600.00 s in steps of 0.01
	⇩	**GROUND IOC1 RESET DELAY: 0.00 s**	Range: 0.00 to 600.00 s in steps of 0.01
	⇩	**GROUND IOC1 BLOCK: Off**	Range: FlexLogic operand
	⇩	**GROUND IOC1 TARGET: Self-reset**	Range: Self-reset, Latched, Disabled
	⇧	**GROUND IOC1 EVENTS: Disabled**	Range: Disabled, Enabled

The ground instantaneous overcurrent element can be used as an instantaneous element with no intentional delay or as a definite time element. The ground current input is the quantity measured by the ground input CT and is the fundamental phasor magnitude.

NOTE

These elements measure the current that is connected to the ground channel of a CT/VT module. The conversion range of a standard channel is from 0.02 to 46 times the CT rating.

Figure 5-153: Ground IOC1 logic

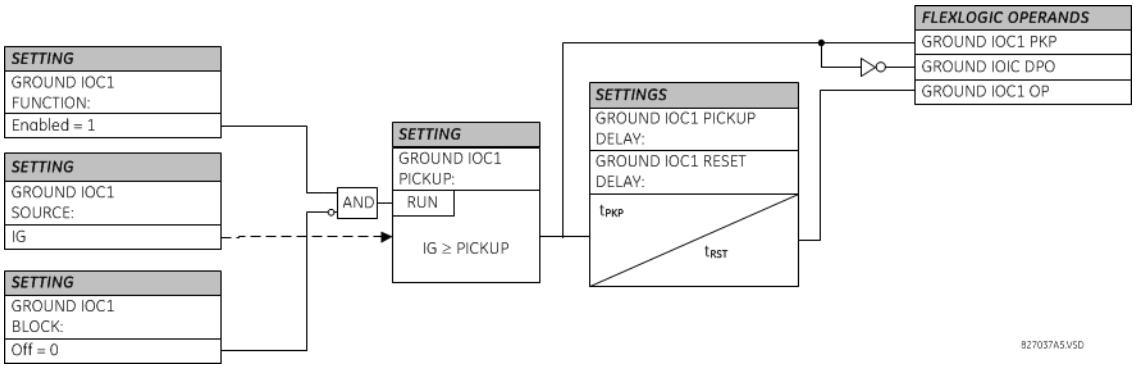

5.7.11.4 Restricted ground fault (ANSI 87RGF, IEC PNDF)

SETTINGS ⇨⇩ GROUPED ELEMENTS ⇨ SETTING GROUP 1(6) ⇨⇩ GROUND CURRENT ⇨⇩ RESTRICTED GROUND FAULT 1(4)

■ RESTRICTED GROUND ■ FAULT 1	⇔	**RESTD GND FT1 FUNCTION: Disabled**	Range: Disabled, Enabled
	⇩	**RESTD GND FT1 SOURCE: SRC 1**	Range: SRC 1, SRC 2, SRC 3, SRC 4
	⇩	**RESTD GND FT1 PICKUP: 0.080 pu**	Range: 0.005 to 30.000 pu in steps of 0.001
	⇩	**RESTD GND FT1 SLOPE: 40%**	Range: 0 to 100% in steps of 1
	⇩	**RESTD GND FT1 PICKUP DELAY: 0.00 s**	Range: 0.00 to 600.00 s in steps of 0.01
	⇩	**RESTD GND FT1 RESET DELAY: 0.00 s**	Range: 0.00 to 600.00 s in steps of 0.01
	⇩	**RESTD GND FT1 BLOCK: Off**	Range: FlexLogic operand
	⇧	**RESTD GND FT1 TARGET: Self-reset**	Range: Self-reset, Latched, Disabled

Restricted ground fault (RGF) protection provides sensitive ground fault detection for low-magnitude fault currents, primarily faults close to the neutral point of a wye-connected winding. An internal ground fault on an impedance grounded wye winding produces a fault current dependent on the ground impedance value and the fault position on the winding with respect to the neutral point. The resultant primary current is negligible for faults on the lower 30% of the winding since the fault voltage is not the system voltage, but rather the result of the transformation ratio between the primary windings and the percentage of shorted turns on the secondary. Therefore, the resultant differential currents can be below the slope threshold of the main differential element and the fault can go undetected. Application of the restricted ground fault protection extends the coverage towards the neutral point (see the following figure).

Figure 5-154: RGF and percent differential zones of protection

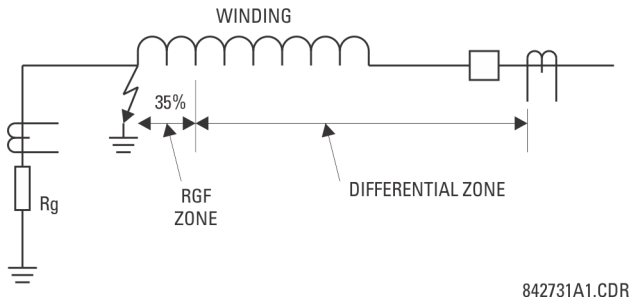

This protection is often applied to transformers having impedance-grounded wye windings. The element can also be applied to the stator winding of a generator having the neutral point grounded with a CT installed in the grounding path, or the ground current obtained by external summation of the neutral-side stator CTs. The following figure shows the basic application and wiring rules.

Figure 5-155: Typical applications of RGF protection

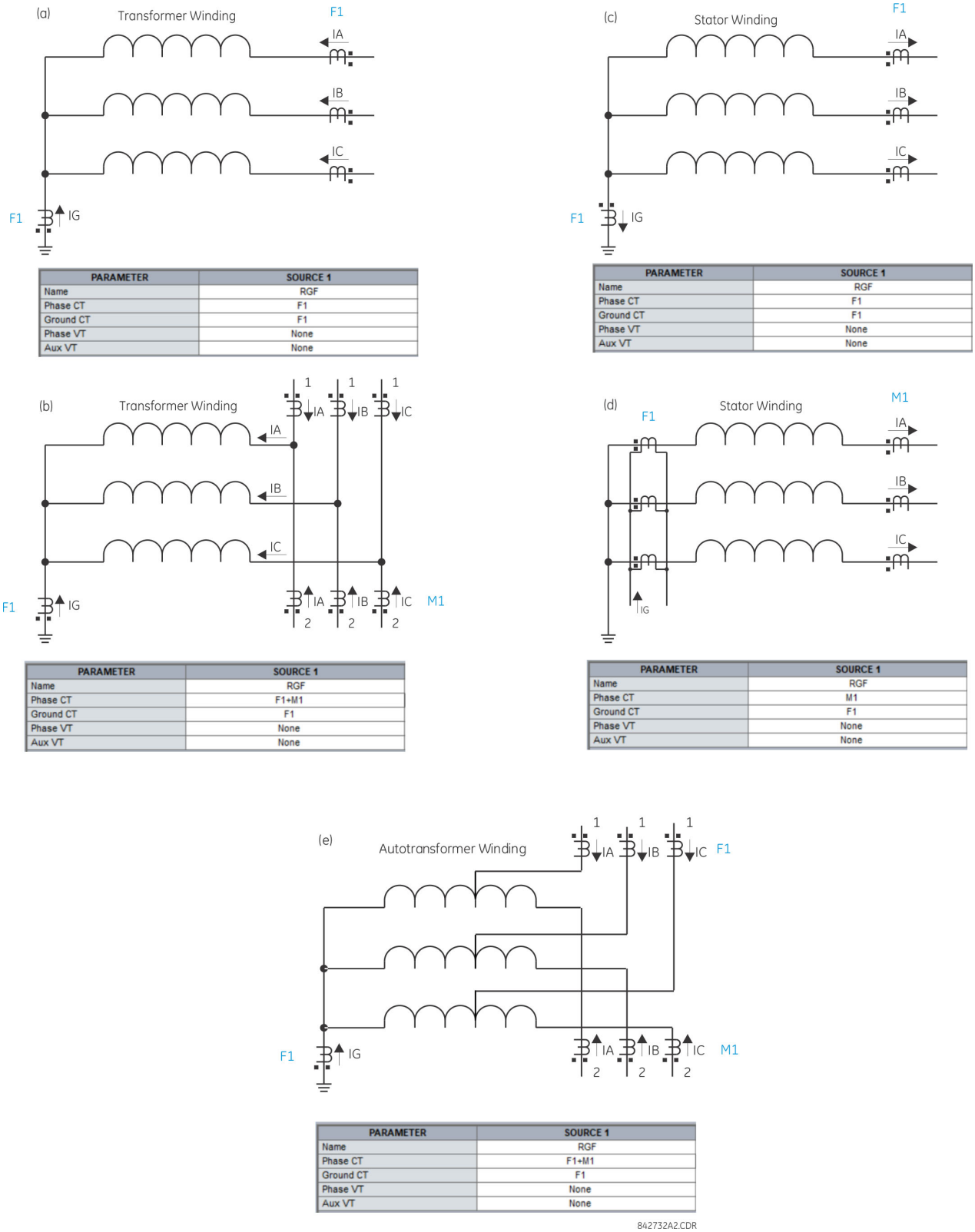

PARAMETER	SOURCE 1
Name	RGF
Phase CT	F1
Ground CT	F1
Phase VT	None
Aux VT	None

PARAMETER	SOURCE 1
Name	RGF
Phase CT	F1
Ground CT	F1
Phase VT	None
Aux VT	None

PARAMETER	SOURCE 1
Name	RGF
Phase CT	F1+M1
Ground CT	F1
Phase VT	None
Aux VT	None

PARAMETER	SOURCE 1
Name	RGF
Phase CT	M1
Ground CT	F1
Phase VT	None
Aux VT	None

PARAMETER	SOURCE 1
Name	RGF
Phase CT	F1+M1
Ground CT	F1
Phase VT	None
Aux VT	None

The next figures show distribution of the ground fault current through the grounded neutral point of the wye winding and primary delta winding as a function of the fault location as a percentage of the whole wye winding. Magnitude of the transformer winding fault is controlled by several factors, such as supply source impedance, wye winding neutral grounding impedance, transformer leakage reactance, fault voltage windings connection and position of the fault on the winding with respect to the neutral point.

Figure 5-156: Fault current through transformer neutral against primary current (left is resistance-ground neutral, right is solidly grounded neutral)

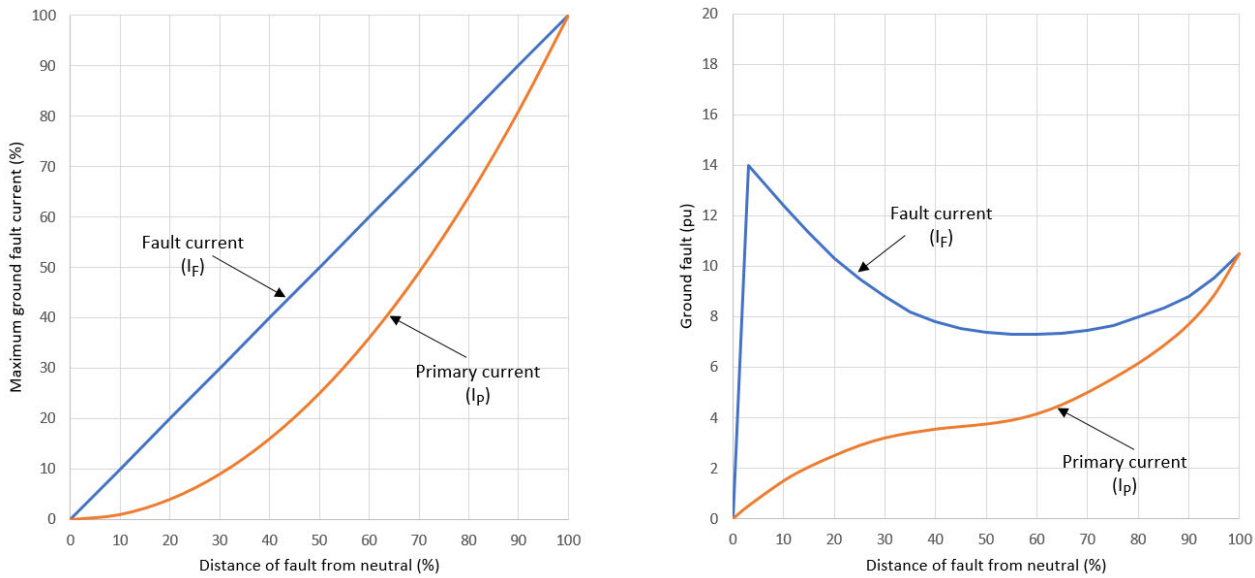

Figure 5-157: Fault current through transformer neutral against primary current (winding current flow during ground fault)

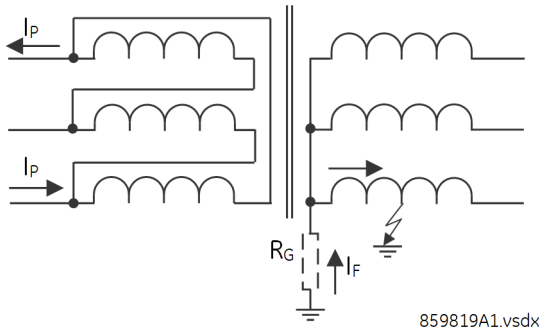

The settings are as follows.

RESTD GND FT1 SOURCE — Identifies the signal source for the restricted ground fault (RGF) function. It is important that source includes a set of three-phase CTs on the line side of the wye winding of the transformer assigned to the Phase CT setting of this source and a neutral point CT assigned to the Ground CT setting of this source. In case of more breaker-and-a-half connections on the line side of the transformer or autotransformer application, Phase CT arrangement need to include the sum of CT banks contributing to the differential signal. When the summed CTs have a different ratio, the relay automatically re-scales to the maximum CT primary nominal value.

RESTD GND FT1 PICKUP — Defines the minimum ground differential current required for operation. The relay automatically matches the CT ratios between the phase and ground CTs by re-scaling the ground CT to the phase CT level, which becomes a base value for the differential and restraint currents. For example, for 10 MVA, 33 kV to 11 kV transformer, 10% impedance, D / Y-1, $R_G = 6.3\Omega$, with Phase CT ratio = 600 / 1 A.

Maximum phase-to-ground fault current $IG_{MAX} = 11\ kV / (\sqrt{3} \times 6.3\Omega) = 1000$ A primary.

For a winding fault point at 5% distance from the neutral:

$IG_{PKP} = 0.05 \times IG_{MAX} = 0.05 \times 1000 = 50$ A primary. The pickup setting is chosen as PKP = 50 A / 600 A = 0.083 pu

Note that for correct operation of the element, the **CURRENT CUTOFF** setting under Display Properties has to be set at least two times less than the **PICKUP** setting.

RESTD GND FT1 SLOPE — Defines the restrain characteristics for this element. Set the slope to provide extra restraint for external faults, but not prevent operation for the winding fault during heavy transformer load. Transformer nominal winding current is $I_{N(W)}$ = 10 MVA / ($\sqrt{3}$ × 11 kV) = 525 A = 525 A / 600 A = 0.875 pu. Considering that RGF algorithm restraint is defined by the positive-sequence current during load, and for currents below 2 pu restraint is equal to I1/8, slope can be estimated as follows:

Slope = PKP / (1.2 × $I_{N(W)}$ / 8) × 100% = 0.083 pu / (1.2 × 0.875 / 8) × 100% = 63%

where 1.2 factor accounts for 20% temporary overload of the transformer

Because the final slope has to be set lower than this calculated value to have some safety margin, the final setting can be selected as 43%.

RESTD GND FT1 PICKUP DELAY — Defines element delay from the pickup to assertion of the RESTD GND FT1 OP operand.

RESTD GND FT1 RESET DELAY — Defines how long the RESTD GND FT1 OP operand stays asserted after pickup conditions disappear.

The relay incorporates low-impedance restricted ground fault protection. This low-impedance form of protection faces potential stability problems. An external phase-to-phase fault is an ultimate case. Ideally, there is neither ground (IG) nor neutral (IN = IA + IB + IC) current present. If one or more of the phase CTs saturate, a spurious neutral current is seen by the relay. This is similar to a single infeed situation and can be mistaken for an internal fault. Similar difficulties occur in a breaker-and-a-half application of the restricted ground fault, where any through fault with a weak infeed from the winding itself can cause problems.

The UR uses a novel definition of the restraining signal to cope with the above stability problems while providing fast and sensitive protection. Even with the improved definition of the restraining signal, the breaker-and-a-half application of the restricted ground fault must be approached with care, and is not recommended unless the settings are carefully selected to avoid maloperation due to CT saturation.

The differential current is produced as an unbalance current between the ground current of the neutral CT (IG) and the neutral current derived from the phase CTs (IN = IA + IB + IC):

$$Igd = |IG + IN| = |IG + IA + IB + IC| \quad \textbf{Eq. 5-28}$$

The restraining signal ensures stability of protection during CT saturation conditions and is produced as a maximum value among three components related to zero, negative, and positive-sequence currents of the three phase CTs as follows:

$$Irest = \max(IR0, IR1, IR2) \quad \textbf{Eq. 5-29}$$

The zero-sequence component of the restraining signal (IR0) is meant to provide maximum restraint during external ground faults, and therefore is calculated as a vectorial difference of the ground and neutral currents:

$$IR0 = |IG - IN| = |IG - (IA + IB + IC)| \quad \textbf{Eq. 5-30}$$

The equation above brings an advantage of generating the restraining signal of twice the external ground fault current, while reducing the restraint below the internal ground fault current. The negative-sequence component of the restraining signal (IR2) is meant to provide maximum restraint during external phase-to-phase faults and is calculated as follows:

$$IR2 = |I_2| \text{ or } IR2 = 3 \times |I_2| \quad \textbf{Eq. 5-31}$$

Following complete de-energization of the windings (all three phase currents below 5% of nominal for at least five cycles), the relay uses a multiplier of 1 in preparation for the next energization. The multiplier of 3 is used during normal operation; that is, two cycles after the winding has been energized. The lower multiplier is used to ensure better sensitivity when energizing a faulty winding.

The positive-sequence component of the restraining signal (IR1) is adaptive and provides restraint during symmetrical conditions, either symmetrical faults or load.

Additionally, the algorithm detects a long-lasting DC during energization, which can saturate line CTs and increase IR1. Long lasting DC in phase A (same in other two phases) is estimated with the following condition:

$$DC_A = |I_A_{RMS} - 9 \times I_A_{MAG} / 8| > 0 \quad \textbf{Eq. 5-32}$$

When this condition is satisfied in any phase for three cycles, DC_{ACTIVE} is set and is reset in 60 cycles once the condition disappears. Overall IR1 is calculated according to the following algorithm:

IF |I_1| > 2 pu AND |I_1| > |I_0|, THEN IR1 = 3 × (I_1_{MAG} - I_0_{MAG})

IF DC_{ACTIVE} THEN IR1 = I_1_{MAG} / 2

OTHERWISE IR1 = I_1_{MAG} / 8

During an external fault involving ground when positive-sequence current exceeds 200% of the phase CT nominal and positive-sequence current exceeds zero-sequence current, IR1 restraint is set to the maximum value. During energization with the long-lasting DC, IR1 is set to half of the positive-sequence current to ensure extra restraint. If none of two conditions are present, then IR1 is set to the minimum value of the 1/8 of the positive-sequence current to ensure sensitivity during load conditions.

The raw restraining signal (Irest) is further post-filtered for better performance during external faults with heavy CT saturation and for better switch-off transient control:

$$Igr(k) = \max(Irest(k), \alpha \times Igr(k - 1)) \quad \textbf{Eq. 5-33}$$

where

k represents a present sample
k – 1 represents the previous sample
α is a factory constant ($\alpha < 1$)

The equation above introduces a decaying memory to the restraining signal. Should the raw restraining signal (Irest) disappear or drop significantly, such as when an external fault gets cleared or a CT saturates heavily, the actual restraining signal (Igr(k)) does not reduce instantly but keeps decaying decreasing its value by 50% each 15.5 power system cycles.

For additional security, the element applies a ground current of the transformer neutral CT (IG) supervision by allowing element pickup and operation when the IG magnitude is above 0.8 × Pickup setting.

Having the differential and restraining signals developed, the element applies a single slope differential characteristic with a minimum pickup as shown in the following logic diagram.

Figure 5-158: Restricted ground fault logic

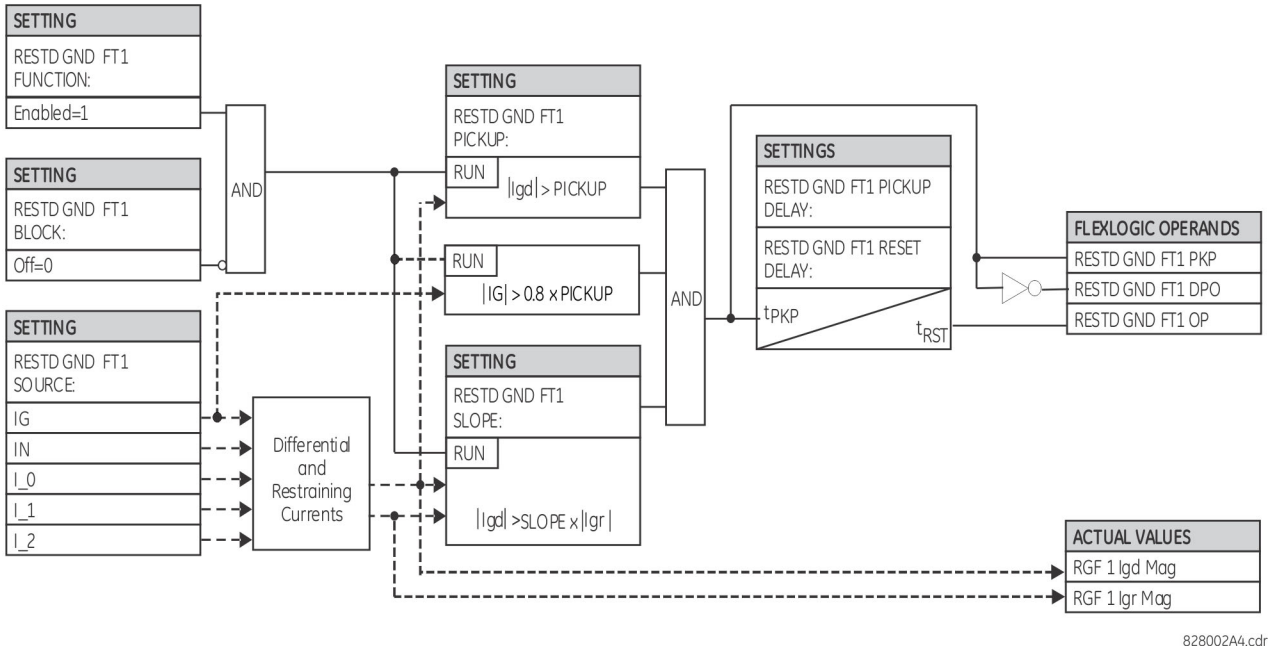

The following examples explain how the restraining signal is created for maximum sensitivity and security. These examples clarify the operating principle and provide guidance for testing of the element.

Example 1: External single-line-to-ground fault

Given the following inputs: IA = 1 pu ∠0°, IB = 0, IC = 0, and IG = 1 pu ∠180°

The relay calculates the following values:

$$\text{Igd} = 0,\ \text{IR0} = \text{abs}\left(3 \times \frac{1}{3} - (-1)\right) = 2\ \text{pu},\ \text{IR2} = 3 \times \frac{1}{3} = 1\ \text{pu},\ \text{IR1} = \frac{1/3}{8} = 0.042\ \text{pu},\ \text{and Igr} = 2\ \text{pu}$$

The restraining signal is twice the fault current. This gives extra margin if the phase or neutral CT saturates.

Example 2: External high-current SLG fault

Given the following inputs: IA = 10 pu ∠0°, IB = 0, IC = 0, and IG = 10 pu ∠–180°

The relay calculates the following values:

$$\text{Igd} = 0,\ \text{IR0} = \text{abs}\left(3 \times \frac{1}{3} - (-10)\right) = 20\ \text{pu},\ \text{IR2} = 3 \times \frac{10}{3} = 10\ \text{pu},\ \text{IR1} = 3 \times \left(\frac{10}{3} - \frac{10}{3}\right) = 0,\ \text{and Igr} = 20\ \text{pu}$$

Example 3: External high-current three-phase symmetrical fault

Given the following inputs: IA = 10 pu ∠0°, IB = 10 pu ∠–120°, IC = 10 pu ∠120°, and IG = 0 pu

The relay calculates the following values:

$$\text{Igd} = 0,\ \text{IR0} = \text{abs}(3 \times 0 - (0)) = 0\ \text{pu},\ \text{IR2} = 3 \times 0 = 0\ \text{pu},\ \text{IR1} = 3 \times \left(\frac{10}{3} - 0\right) = 10\ \text{pu},\ \text{and Igr} = 10\ \text{pu}$$

Example 4: Internal low-current single-line-to-ground fault under full load

Given the following inputs: IA = 1.10 pu ∠0°, IB = 1.0 pu ∠–120°, IC = 1.0 pu ∠120°, and IG = 0.05 pu ∠0°

The relay calculates the following values:

I_0 = 0.033 pu ∠0°, I_2 = 0.033 pu ∠0°, and I_1 = 1.033 pu ∠0°

Igd = abs(3 × 0.0333 + 0.05) = 0.15 pu, IR0 = abs(3 × 0.033 – (0.05)) = 0.05 pu, IR2 = 3 × 0.033 = 0.10 pu, IR1 = 1.033 / 8 = 0.1292 pu, and Igr = 0.1292 pu

Despite very low fault current level, the differential current is above 100% of the restraining current.

5.7.12 Negative sequence current

5.7.12.1 Menu

SETTINGS ⇨⇩ GROUPED ELEMENTS ⇨ SETTING GROUP 1(6) ⇨⇩ NEGATIVE SEQUENCE CURRENT

■ NEGATIVE SEQUENCE ■ CURRENT	⇔	■ NEG SEQ TOC1 ■	See below
	⇩	■ NEG SEQ TOC2 ■	
	⇩	■ NEG SEQ IOC1 ■	See page 5-291
	⇩	■ NEG SEQ IOC2 ■	
	⇩	■ NEG SEQ DIR OC1 ■	See page 5-292
	⇧	■ NEG SEQ DIR OC2 ■	

The L90 provides two negative-sequence time overcurrent elements, two negative-sequence instantaneous overcurrent elements, and two negative-sequence directional overcurrent elements. For information on the negative sequence time overcurrent curves, see the Inverse TOC Curve Characteristics section earlier.

5.7.12.2 Negative sequence time overcurrent (ANSI 51Q, IEC PTOC)

SETTINGS ⇨⇩ GROUPED ELEMENTS ⇨ SETTING GROUP 1(6) ⇨⇩ NEGATIVE SEQUENCE CURRENT ⇨ NEG SEQ TOC1(2)

■ NEG SEQ TOC1 ■	⇔	NEG SEQ TOC1 FUNCTION: Disabled	Range: Disabled, Enabled
	⇩	NEG SEQ TOC1 SIGNAL SOURCE: SRC 1	Range: SRC 1, SRC 2, SRC 3, SRC 4
	⇩	NEG SEQ TOC1 PICKUP: 1.000 pu	Range: 0.020 to 30.000 pu in steps of 0.001
	⇩	NEG SEQ TOC1 CURVE: IEEE Mod Inv	Range: see Overcurrent Curve Types table
	⇩	NEG SEQ TOC1 TD MULTIPLIER: 1.00	Range: 0.00 to 600.00 in steps of 0.01
	⇩	NEG SEQ TOC1 RESET: Instantaneous	Range: Instantaneous, Timed
	⇩	NEG SEQ TOC1 BLOCK: Off	Range: FlexLogic operand
	⇩	NEG SEQ TOC1 TARGET: Self-reset	Range: Self-reset, Latched, Disabled

⇧	**NEG SEQ TOC1 EVENTS: Disabled**	Range: Disabled, Enabled

The negative-sequence time overcurrent element can be used to determine and clear unbalance in the system. The input for calculating negative-sequence current is the fundamental phasor value.

Two methods of resetting operation are available; "Timed" and "Instantaneous" (see the Inverse TOC Curve Characteristics section earlier for details on curve setup, trip times and reset operation). When the element is blocked, the time accumulator resets according to the reset characteristic. For example, if the element reset characteristic is set to "Instantaneous" and the element is blocked, the time accumulator clears immediately.

Figure 5-159: Negative sequence TOC1 logic

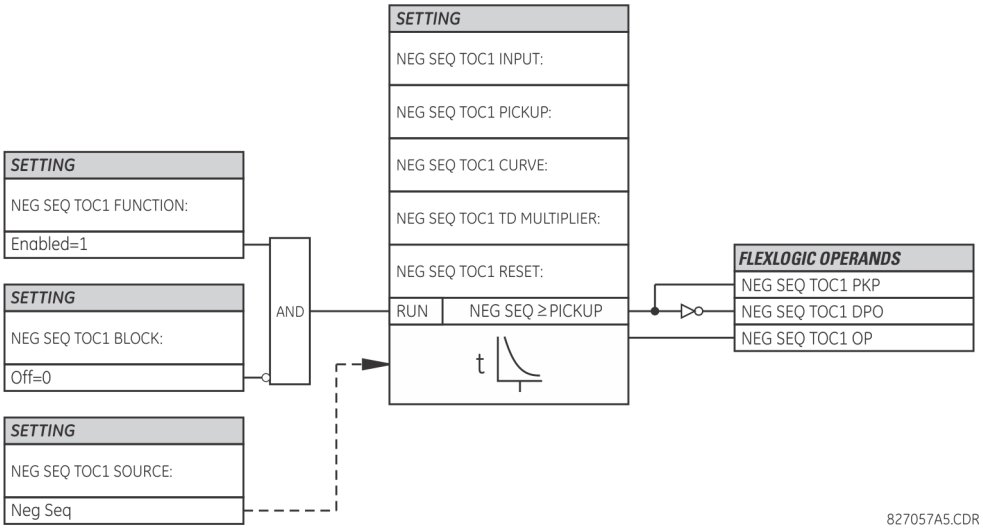

5.7.12.3 Negative sequence instantaneous overcurrent (ANSI 50Q, IEC PIOC)

SETTINGS ⇨⇩ GROUPED ELEMENTS ⇨ SETTING GROUP 1(6) ⇨⇩ NEGATIVE SEQUENCE CURRENT ⇨⇩ NEG SEQ OC1(2)

■ **NEG SEQ IOC1** ■	⇔	**NEG SEQ IOC1 FUNCTION: Disabled**	Range: Disabled, Enabled
	⇩	**NEG SEQ IOC1 SIGNAL SOURCE: SRC 1**	Range: SRC 1, SRC 2, SRC 3, SRC 4
	⇩	**NEG SEQ IOC1 PICKUP: 1.000 pu**	Range: 0.020 to 30.000 pu in steps of 0.001
	⇩	**NEG SEQ IOC1 PICKUP DELAY: 0.00 s**	Range: 0.00 to 600.00 s in steps of 0.01
	⇩	**NEG SEQ IOC1 RESET DELAY: 0.00 s**	Range: 0.00 to 600.00 s in steps of 0.01
	⇩	**NEG SEQ IOC1 BLOCK: Off**	Range: FlexLogic operand
	⇩	**NEG SEQ IOC1 TARGET: Self-reset**	Range: Self-reset, Latched, Disabled
	⇧	**NEG SEQ IOC1 EVENTS: Disabled**	Range: Disabled, Enabled

The negative-sequence instantaneous overcurrent element can be used as an instantaneous function with no intentional delay or as a definite time function. The element responds to the negative-sequence current fundamental frequency phasor magnitude (calculated from the phase currents) and applies a positive-sequence restraint for better performance: a small portion (12.5%) of the positive-sequence current magnitude is subtracted from the negative-sequence current magnitude when forming the operating quantity.

$$I_{op} = |I_2| - K \times |I_1| \text{ where } K = 1/8 \qquad \textbf{Eq. 5-34}$$

The positive-sequence restraint allows for more sensitive settings by counterbalancing spurious negative-sequence currents resulting from

- System unbalances under heavy load conditions
- Transformation errors of current transformers (CTs) during three-phase faults
- Fault inception and switch-off transients during three-phase faults

The positive-sequence restraint must be considered when testing for pickup accuracy and response time (multiple of pickup). The operating quantity depends on how the test currents are injected into the relay (single-phase injection: $I_{op} = 0.2917 \times I_{injected}$; three-phase injection, opposite rotation: $I_{op} = I_{injected}$).

Figure 5-160: Negative sequence IOC1 logic

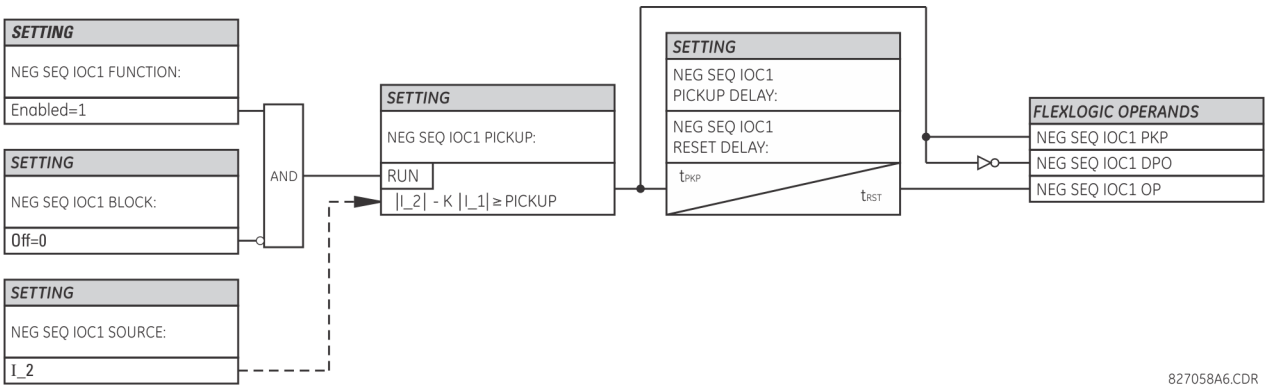

5.7.12.4 Negative sequence directional overcurrent (ANSI 67Q, IEC PDEF/PTOC)

SETTINGS ⇨⇩ GROUPED ELEMENTS ⇨ SETTING GROUP 1(6) ⇨⇩ NEGATIVE SEQUENCE CURRENT ⇨⇩ NEG SEQ DIR OC1(2)

■ **NEG SEQ DIR OC1** ■	⇔	**NEG SEQ DIR OC1 FUNCTION: Disabled**	Range: Disabled, Enabled
	⇩	**NEG SEQ DIR OC1 SOURCE: SRC 1**	Range: SRC 1, SRC 2, SRC 3, SRC 4
	⇩	**NEG SEQ DIR OC1 OFFSET: 0.00 Ω**	Range: 0.00 to 250.00 ohms in steps of 0.01
	⇩	**NEG SEQ DIR OC1 TYPE: Neg Sequence**	Range: Neg Sequence, Zero Sequence
	⇩	**NEG SEQ DIR OC1 POS-SEQ RESTRAINT: 0.063**	Range: 0.000 to 0.500 in steps of 0.001
	⇩	**NEG SEQ DIR OC1 FWD ECA: 75° Lag**	Range: 0 to 90° Lag in steps of 1
	⇩	**NEG SEQ DIR OC1 FWD LIMIT ANGLE: 90°**	Range: 40 to 90° in steps of 1
	⇩	**NEG SEQ DIR OC1 FWD PICKUP: 0.050 pu**	Range: 0.015 to 30.000 pu in steps of 0.005

⇕	**NEG SEQ DIR OC1 REV LIMIT ANGLE: 90°**	Range: 40 to 90° in steps of 1
⇕	**NEG SEQ DIR OC1 REV PICKUP: 0.050 pu**	Range: 0.015 to 30.000 pu in steps of 0.005
⇕	**NEG SEQ DIR OC1 BLK: Off**	Range: FlexLogic operand
⇕	**NEG SEQ DIR OC1 TARGET: Self-reset**	Range: Self-reset, Latched, Disabled
⇧	**NEG SEQ DIR OC1 EVENTS: Disabled**	Range: Disabled, Enabled

There are two negative-sequence directional overcurrent protection elements available. The element provides both forward and reverse fault direction indications through its output operands NEG SEQ DIR OC1 FWD and NEG SEQ DIR OC1 REV, respectively. The output operand is asserted if the magnitude of the operating current is above a pickup level (overcurrent unit) and the fault direction is seen as forward or reverse, respectively (directional unit).

The overcurrent unit of the element essentially responds to the magnitude of a fundamental frequency phasor of either the negative-sequence or neutral current as per user selection.

A positive-sequence restraint is applied for better performance: a small user-programmable portion of the positive-sequence current magnitude is subtracted from the negative or zero-sequence current magnitude, respectively, when forming the element operating quantity.

$$I_{op} = |I_2| - K \times |I_1| \text{ or } I_{op} = 3 \times (|I_0| - K \times |I_1|) \qquad \textbf{Eq. 5-35}$$

The positive-sequence restraint allows for more sensitive settings by counterbalancing spurious negative-sequence and zero-sequence currents resulting from

- System unbalances under heavy load conditions
- Transformation errors of current transformers (CTs)
- Fault inception and switch-off transients

The positive-sequence restraint must be considered when testing for pickup accuracy and response time (multiple of pickup). The positive-sequence restraint is removed for low currents. If the positive-sequence current is less than 0.8 pu, then the restraint is removed by changing the constant K to zero. This results in better response to high-resistance faults when the unbalance is very small and there is no danger of excessive CT errors, since the current is low.

The operating quantity depends on the way the test currents are injected into the L90. For single phase injection

- $I_{op} = ⅓ \times (1 - K) \times I_{injected}$ for I_2 mode
- $I_{op} = (1 - K) \times I_{injected}$ for I_0 mode if I_1 > 0.8 pu

The directional unit uses the negative-sequence current (I_2) and negative-sequence voltage (V_2).

The following tables define the negative-sequence directional overcurrent element.

Table 5-40: Negative-sequence directional overcurrent unit

Mode	Operating current
Negative-sequence	$I_{op} = \|I_2\| - K \times I_1\|$
Zero-sequence	$I_{op} = 3 \times (\|I_0\| - K \times \|I_1\|)$ if $\|I_1\| > 0.8$ pu $I_{op} = 3 \times \|I_0\|$ if $\|I_1\| \leq 0.8$ pu

Table 5-41: Negative-sequence directional unit

Direction	Compared phasors	
Forward	–V_2 + Z_offset × I_2	I_2 × 1∠ECA
Reverse	–V_2 + Z_offset × I_2	–(I_2 × 1∠ECA)

Z_offset is the offset impedance, for which magnitude is the OFFSET setting and angle is the FWD ECA.

The negative-sequence voltage must be greater than **PRODUCT SETUP ⇨⇩ DISPLAY PROPERTIES ⇨⇩ VOLTAGE CUT-OFF LEVEL** to be validated for use as polarizing signal. Additionally, when offset impedance is applied and negative-sequence current is above 0.2 pu, compensated negative-sequence voltage -V_2 + Z_offset x I_2 has to be above 0.02 pu in order to discriminate fault direction; otherwise when negative-sequence current is less than 0.2 pu, -V_2 is then used as the polarizing signal. If the polarizing signal is not validated, neither forward nor reverse indication is given. The following figure explains the usage of the voltage polarized directional unit of the element. It shows the phase angle comparator characteristics for a phase A to ground fault, with settings of

ECA = 75° (element characteristic angle = centerline of operating characteristic)
FWD LA = 80° (forward limit angle = ± the angular limit with the ECA for operation)
REV LA = 80° (reverse limit angle = ± the angular limit with the ECA for operation)

The element incorporates a current reversal logic: if the reverse direction is indicated for at least 1.25 of a power system cycle, the prospective forward indication is delayed by 1.5 of a power system cycle. The element emulates an electromechanical directional device. Larger operating and polarizing signals result in faster directional discrimination, bringing more security to the element operation.

Figure 5-161: Negative-sequence directional characteristic

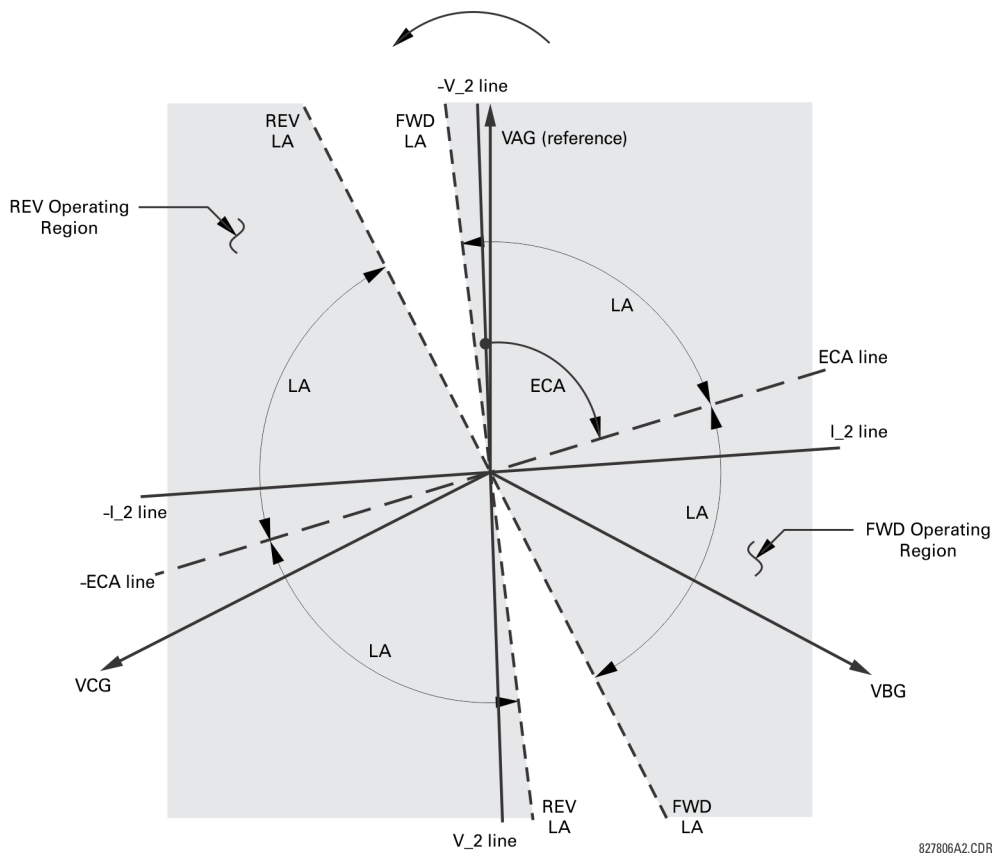

The forward-looking function is designed to be more secure compared to the reverse-looking function, so use the forward-looking function for the tripping direction. The reverse-looking function is faster compared to the forward-looking function, so use the reverse-looking function for the blocking direction. This allows for better protection coordination. Take this bias into account when using the negative-sequence directional overcurrent element to directionalize other protection elements. The negative-sequence current must be greater than the **PRODUCT SETUP ⇨⇩ DISPLAY PROPERTIES ⇨⇩ CURRENT CUT-OFF LEVEL** setting value.

Settings

NEG SEQ DIR OC1 OFFSET — Specifies the offset impedance used by this protection. The primary application for the offset impedance is to guarantee correct identification of fault direction on series compensated lines (see the Application of Settings chapter for information on how to calculate this setting). In regular applications, the offset impedance ensures proper operation even if the negative-sequence voltage at the relaying point is very small. If this is the intent, the offset impedance shall not be larger than the negative-sequence impedance of the protected circuit. Practically, it is several times smaller. Enter the offset impedance in secondary ohms.

NEG SEQ DIR OC1 TYPE — Selects the operating mode for the overcurrent unit of the element. The choices are "Neg Sequence" and "Zero Sequence." In some applications it is advantageous to use a directional negative-sequence overcurrent function instead of a directional zero-sequence overcurrent function as inter-circuit mutual effects are minimized.

NEG SEQ DIR OC1 POS-SEQ RESTRAINT — Controls the positive-sequence restraint. Set it to 0.063 (in "Zero Sequence" mode) or 0.125 (in "Neg Sequence" mode) for backward compatibility with revisions 3.40 and earlier. Set it to zero to remove the restraint. Set it higher if large system unbalances or poor CT performance are expected.

NEG SEQ DIR OC1 FWD ECA — Select the element characteristic angle (ECA) for the forward direction. The element characteristic angle in the reverse direction is the angle set for the forward direction shifted by 180°.

NEG SEQ DIR OC1 FWD LIMIT ANGLE — Defines a symmetrical limit angle (in both directions from the ECA) for the forward direction.

NEG SEQ DIR OC1 FWD PICKUP — Defines the pickup level for the overcurrent unit in the forward direction. This pickup threshold applies to zero-sequence or negative-sequence current based on the **NEG SEQ DIR OC1 TYPE** setting. When specifying this setting, keep in mind that the design uses a positive-sequence restraint technique.

NEG SEQ DIR OC1 REV LIMIT ANGLE — Defines a symmetrical limit angle (in both directions from the ECA) for the reverse direction.

NEG SEQ DIR OC1 REV PICKUP — Defines the pickup level for the overcurrent unit in the reverse direction. This pickup threshold applies to zero-sequence or negative-sequence current based on the **NEG SEQ DIR OC1 TYPE** setting. When selecting this setting, keep in mind that the design uses a positive-sequence restraint technique.

5

Figure 5-162: Negative-sequence directional OC1 logic

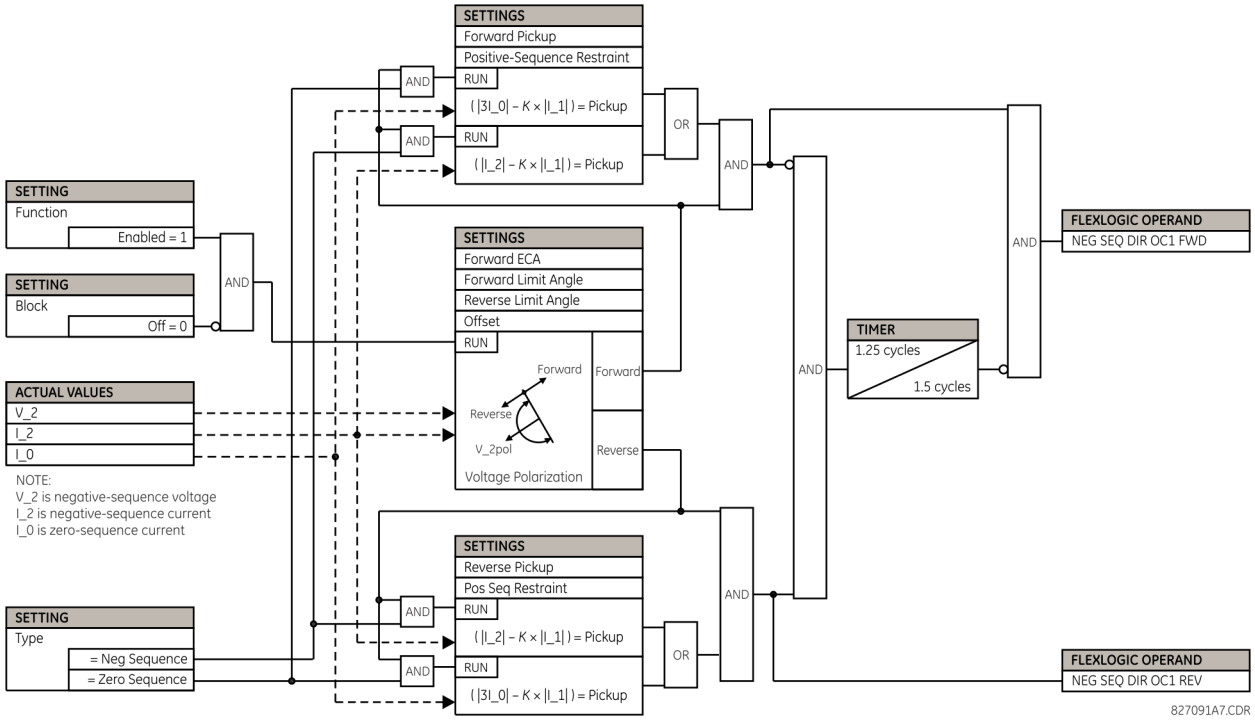

5.7.13 Breaker failure (ANSI 50BF)

SETTINGS ⇨⇩ GROUPED ELEMENTS ⇨ SETTING GROUP 1(6) ⇨ BREAKER FAILURE ⇨ BREAKER FAILURE 1(4)

■ BREAKER FAILURE 1 ■	⇔	BF1 FUNCTION: Disabled	Range: Disabled, Enabled
	⇩	BF1 MODE: 3-Pole	Range: 3-Pole, 1-Pole
	⇩	BF1 SOURCE: SRC 1	Range: SRC 1, SRC 2, SRC 3, SRC 4
	⇩	BF1 USE AMP SUPV: Yes	Range: Yes, No
	⇩	BF1 USE SEAL-IN: Yes	Range: Yes, No
	⇩	BF1 3-POLE INITIATE: Off	Range: FlexLogic operand
	⇩	BF1 BLOCK: Off	Range: FlexLogic operand
	⇩	BF1 RETRIP PICKUP DELAY: 0.033 s	Range: 0.000 to 65.535 s in steps of 0.001
	⇩	BF1 PH AMP SUPV PICKUP: 1.050 pu	Range: 0.020 to 30.000 pu in steps of 0.001
	⇩	BF1 N AMP SUPV PICKUP: 1.050 pu	Range: 0.020 to 30.000 pu in steps of 0.001
	⇩	BF1 USE TIMER 1: Yes	Range: Yes, No
	⇩	BF1 TIMER 1 PICKUP DELAY: 0.000 s	Range: 0.000 to 65.535 s in steps of 0.001
	⇩	BF1 USE TIMER 2: Yes	Range: Yes, No
	⇩	BF1 TIMER 2 PICKUP DELAY: 0.000 s	Range: 0.000 to 65.535 s in steps of 0.001
	⇩	BF1 USE TIMER 3: Yes	Range: Yes, No
	⇩	BF1 TIMER 3 PICKUP DELAY: 0.000 s	Range: 0.000 to 65.535 s in steps of 0.001
	⇩	BF1 BKR POS1 ϕA/3P: Off	Range: FlexLogic operand
	⇩	BF1 BKR POS2 ϕA/3P: Off	Range: FlexLogic operand
	⇩	BF1 BREAKER TEST ON: Off	Range: FlexLogic operand
	⇩	BF1 PH AMP HISET PICKUP: 1.050 pu	Range: 0.020 to 30.000 pu in steps of 0.001
	⇩	BF1 N AMP HISET PICKUP: 1.050 pu	Range: 0.020 to 30.000 pu in steps of 0.001
	⇩	BF1 PH AMP LOSET PICKUP: 1.050 pu	Range: 0.020 to 30.000 pu in steps of 0.001
	⇩	BF1 N AMP LOSET PICKUP: 1.050 pu	Range: 0.020 to 30.000 pu in steps of 0.001

⇕	**BF1 LOSET TIME DELAY: 0.000 s**	Range: 0.000 to 65.535 s in steps of 0.001
⇕	**BF1 TRIP DROPOUT DELAY: 0.000 s**	Range: 0.000 to 65.535 s in steps of 0.001
⇕	**BF1 TARGET: Self-reset**	Range: Self-reset, Latched, Disabled
⇕	**BF1 EVENTS: Disabled**	Range: Disabled, Enabled
⇕	**BF1 PH A INITIATE: Off**	Range: FlexLogic operand Valid only for 1-Pole breaker failure schemes
⇕	**BF1 PH B INITIATE: Off**	Range: FlexLogic operand Valid only for 1-Pole breaker failure schemes
⇕	**BF1 PH C INITIATE: Off**	Range: FlexLogic operand Valid only for 1-Pole breaker failure schemes
⇕	**BF1 BKR POS1 ϕB: Off**	Range: FlexLogic operand Valid only for 1-Pole breaker failure schemes
⇕	**BF1 BKR POS1 ϕC: Off**	Range: FlexLogic operand Valid only for 1-Pole breaker failure schemes
⇕	**BF1 BKR POS2 ϕB: Off**	Range: FlexLogic operand Valid only for 1-Pole breaker failure schemes
⇧	**BF1 BKR POS2 ϕC: Off**	Range: FlexLogic operand Valid only for 1-Pole breaker failure schemes

In general, a breaker failure scheme determines that a breaker signaled to trip has not cleared a fault within a definite time, so further tripping action must be performed. Tripping from the breaker failure scheme should trip all breakers, both local and remote, that can supply current to the faulted zone. Usually operation of a breaker failure element causes clearing of a larger section of the power system than the initial trip. Because breaker failure can result in tripping a large number of breakers and this affects system safety and stability, a very high level of security is required.

Two schemes are provided: one for three-pole tripping only (identified by the name "3BF") and one for three pole plus single-pole operation (identified by the name "1BF"). The philosophy used in these schemes is identical. The operation of a breaker failure element includes three stages: initiation, determination of a breaker failure condition, and output.

Initiation stage

A FlexLogic operand representing the protection trip signal initially sent to the breaker must be selected to initiate the scheme. The initiating signal is sealed-in if primary fault detection can reset before the breaker failure timers have finished timing. The seal-in is supervised by current level, so it is reset when the fault is cleared. If desired, an incomplete sequence seal-in reset can be implemented by using the initiating operand to also initiate a FlexLogic timer, set longer than any breaker failure timer, whose output operand is selected to block the breaker failure scheme.

NOTE For the L90 relay, the protection trip signal initially sent to the breaker is already programmed as a trip output. The protection trip signal does not include other breaker commands that are not indicative of a fault in the protected zone.

Schemes can be initiated either directly or with current level supervision. It is particularly important in any application to decide if a current-supervised initiate is to be used. The use of a current-supervised initiate results in the breaker failure element not being initiated for a breaker that has very little or no current flowing through it, which can be the case for transformer faults. For those situations where it is required to maintain breaker fail coverage for fault levels below the **BF1 PH AMP SUPV PICKUP** or the **BF1 N AMP SUPV PICKUP** setting, do not use a current supervised initiate. Utilize this feature for those situations where coordinating margins can be reduced when high speed reclosing is used. Thus, if this choice is made, fault levels must always be above the supervision pickup levels for dependable operation of the breaker fail scheme. This can also occur in breaker-and-a-half or ring bus configurations where the first breaker closes into a fault; the protection trips and attempts to initiate breaker failure for the second breaker, which is in the process of closing, but does not yet have current flowing through it.

When the scheme is initiated, it sends a trip signal after a pickup delay to the breaker initially signaled to trip (this feature is usually described as re-trip). This reduces the possibility of widespread tripping that results from a declaration of a failed breaker.

Determination of a breaker failure condition

The schemes determine a breaker failure condition via three paths. Each of these paths is equipped with a time delay, after which a failed breaker is declared and trip signals are sent to all breakers required to clear the zone. The delayed paths are associated with breaker failure timers 1, 2, and 3, which are intended to have delays increasing with increasing timer numbers. These delayed paths are individually enabled to allow for maximum flexibility.

Timer 1 logic (early path) is supervised by a fast-operating breaker auxiliary contact. If the breaker is still closed (as indicated by the auxiliary contact) and fault current is detected after the delay interval, an output is issued. Operation of the breaker auxiliary switch indicates that the breaker has mechanically operated. The continued presence of current indicates that the breaker has failed to interrupt the circuit.

Timer 2 logic (main path) is not supervised by a breaker auxiliary contact. If fault current is detected after the delay interval, an output is issued. This path is intended to detect a breaker that opens mechanically but fails to interrupt fault current; the logic therefore does not use a breaker auxiliary contact.

The timer 1 and 2 paths provide two levels of current supervision, high-set and low-set, that allow the supervision level to change from a current that flows before a breaker inserts an opening resistor into the faulted circuit to a lower level after resistor insertion. The high-set detector is enabled after timeout of timer 1 or 2, along with a timer that enables the low-set detector after its delay interval. The delay interval between high-set and low-set is the expected breaker opening time. Both current detectors provide a fast operating time for currents at small multiples of the pickup value. The overcurrent detectors are required to operate after the breaker failure delay interval in case current still flows through the breaker, and they are supervised by a fast reset element described as follows.

5

Timer 3 logic (slow path) is supervised by a breaker auxiliary contact and a control switch contact used to indicate that the breaker is in or out-of-service, disabling this path when the breaker is out-of-service for maintenance. There is no current level check in this logic as it is intended to detect low magnitude faults and it is therefore the slowest to operate.

Output

The outputs from the schemes are:

- FlexLogic operands that report on the operation of portions of the scheme
- FlexLogic operand used to re-trip the protected breaker
- FlexLogic operands that initiate tripping required to clear the faulted zone. The trip output can be sealed-in for an adjustable period.
- Target message indicating a failed breaker has been declared
- Illumination of the front panel Trip LED (and the Phase A, B, or C LED, if applicable)

Main path sequence

Figure 5-163: Breaker failure main path sequence

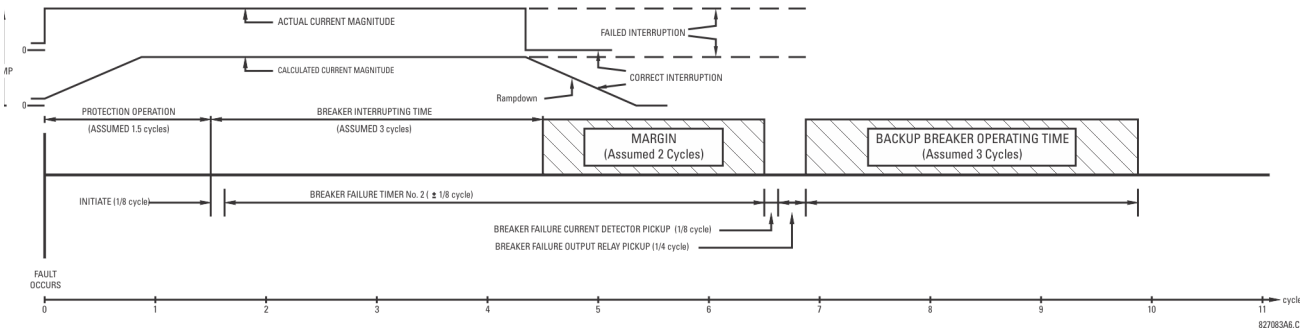

The current supervision elements reset in less than 0.7 of a power cycle for any multiple of pickup current as shown in the following figure.

Figure 5-164: Breaker failure overcurrent supervision reset time

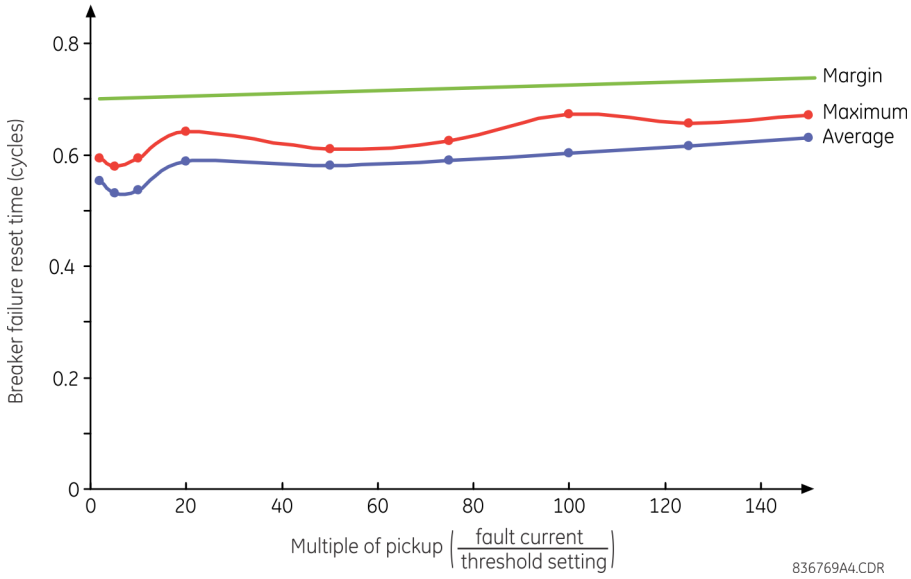

Settings

BF1 MODE — This setting is used to select the breaker failure operating mode: single or three pole.

BF1 USE AMP SUPV — If set to "Yes," the element is initiated if current flowing through the breaker is above the supervision pickup level.

BF1 USE SEAL-IN — If set to "Yes," the element is sealed-in if current flowing through the breaker is above the supervision pickup level.

BF1 3-POLE INITIATE — This setting selects the FlexLogic operand that initiates three-pole tripping of the breaker.

BF1 RETRIP PICKUP DELAY — This setting specifies a pickup delay for the re-trip command. Set this delay longer than the possible spurious contact input activation duration due to transients or temporary DC grounds, taking into account the contact input de-bounce time to avoid re-trip operation for such transients.

BF1 PH AMP SUPV PICKUP — This setting is used to set the phase current initiation and seal-in supervision level. Generally this setting detects the lowest expected fault current on the protected breaker. It can be set as low as necessary (lower than breaker resistor current or lower than load current)—high-set and low-set current supervision guarantee correct operation.

BF1 N AMP SUPV PICKUP — This setting is used to set the neutral current initiate and seal-in supervision level. Generally this setting detects the lowest expected fault current on the protected breaker. Neutral current supervision is used only in the three phase scheme to provide increased sensitivity. This setting is valid only for three-pole tripping schemes.

BF1 USE TIMER 1 — If set to "Yes," the early path is operational.

BF1 TIMER 1 PICKUP DELAY — Timer 1 is set to the shortest time required for breaker auxiliary contact Status-1 to open, from the time the initial trip signal is applied to the breaker trip circuit, plus a safety margin.

BF1 USE TIMER 2 — If set to "Yes," the main path is operational.

BF1 TIMER 2 PICKUP DELAY — Timer 2 is set to the expected opening time of the breaker, plus a safety margin. This safety margin was historically intended to allow for measuring and timing errors in the breaker failure scheme equipment. In microprocessor relays this time is not significant. In L90 relays, which use a Fourier transform, the calculated current magnitude ramps-down to zero one power frequency cycle after the current is interrupted, however this lag does not need to be included in the overall margin duration due to a novel current supervision reset element, as it occurs after current interruption. As shown in the previous figure, this current supervision reset element guarantees breaker failure reset in less than 0.7 power cycles for any subsidence current and irrespective of the magnitude of the fault current.

Note that in bulk oil circuit breakers, the interrupting time for currents less than 25% of the interrupting rating can be significantly longer than the normal interrupting time.

BF1 USE TIMER 3 — If set to "Yes," the Slow Path is operational.

BF1 TIMER 3 PICKUP DELAY — Timer 3 is set to the same interval as timer 2, plus an increased safety margin. Because this path is intended to operate only for low level faults, the delay can be in the order of 300 to 500 ms.

BF1 BKR POS1 ϕA/3P — This setting selects the FlexLogic operand that represents the protected breaker early-type auxiliary switch contact (52/a). When using the single-pole breaker failure scheme, this operand represents the protected breaker early-type auxiliary switch contact on pole A. This is normally a non-multiplied form-A contact. The contact can even be adjusted to have the shortest possible operating time.

BF1 BKR POS2 ϕA/3P — This setting selects the FlexLogic operand that represents the breaker normal-type auxiliary switch contact (52/a). When using the single-pole breaker failure scheme, this operand represents the protected breaker auxiliary switch contact on pole A. This can be a multiplied contact.

BF1 BREAKER TEST ON — This setting is used to select the FlexLogic operand that represents the breaker in-service/out-of-service switch set to the out-of-service position.

BF1 PH AMP HISET PICKUP — This setting sets the phase current output supervision level. Generally this setting is to detect the lowest expected fault current on the protected breaker, before a breaker opening resistor is inserted.

BF1 N AMP HISET PICKUP — This setting sets the neutral current output supervision level. Generally this setting is to detect the lowest expected fault current on the protected breaker, before a breaker opening resistor is inserted. Neutral current supervision is used only in the three pole scheme to provide increased sensitivity. This setting is valid only for three-pole breaker failure schemes.

BF1 PH AMP LOSET PICKUP — This setting sets the phase current output supervision level. Generally this setting is to detect the lowest expected fault current on the protected breaker, after a breaker opening resistor is inserted (approximately 90% of the resistor current).

BF1 N AMP LOSET PICKUP — This setting sets the neutral current output supervision level. Generally this setting is to detect the lowest expected fault current on the protected breaker, after a breaker opening resistor is inserted (approximately 90% of the resistor current). This setting is valid only for three-pole breaker failure schemes.

BF1 LOSET TIME DELAY — Sets the pickup delay for current detection after opening resistor insertion.

BF1 TRIP DROPOUT DELAY — This setting is used to set the period of time for which the trip output is sealed-in. This timer must be coordinated with the automatic reclosing scheme of the failed breaker, to which the breaker failure element sends a cancel reclosure signal. Reclosure of a remote breaker can also be prevented by holding a transfer trip signal on longer than the reclaim time.

BF1 PH A INITIATE / BF1 PH B INITIATE / BF 1 PH C INITIATE — These settings select the FlexLogic operand to initiate phase A, B, or C single-pole tripping of the breaker and the phase A, B, or C portion of the scheme, accordingly. This setting is only valid for single-pole breaker failure schemes.

BF1 BKR POS1 ϕB / BF1 BKR POS 1 ϕC — These settings select the FlexLogic operand to represents the protected breaker early-type auxiliary switch contact on poles B or C, accordingly. This contact is normally a non-multiplied Form-A contact. The contact can even be adjusted to have the shortest possible operating time. This setting is valid only for single-pole breaker failure schemes.

BF1 BKR POS2 ϕB — Selects the FlexLogic operand that represents the protected breaker normal-type auxiliary switch contact on pole B (52/a). This can be a multiplied contact. This setting is valid only for single-pole breaker failure schemes.

BF1 BKR POS2 ϕC — This setting selects the FlexLogic operand that represents the protected breaker normal-type auxiliary switch contact on pole C (52/a). This can be a multiplied contact. For single-pole operation, the scheme has the same overall general concept except that it provides re-tripping of each single pole of the protected breaker. The approach shown in the following single pole tripping diagram uses the initiating information to determine which pole is supposed to trip. The logic is segregated on a per-pole basis. The overcurrent detectors have ganged settings. This setting is valid only for single-pole breaker failure schemes.

Upon operation of the breaker failure element for a single pole trip command, a three-pole trip command needs to be given via output operand BKR FAIL 1 TRIP OP.

Figure 5-165: Single-pole breaker failure, initiate logic

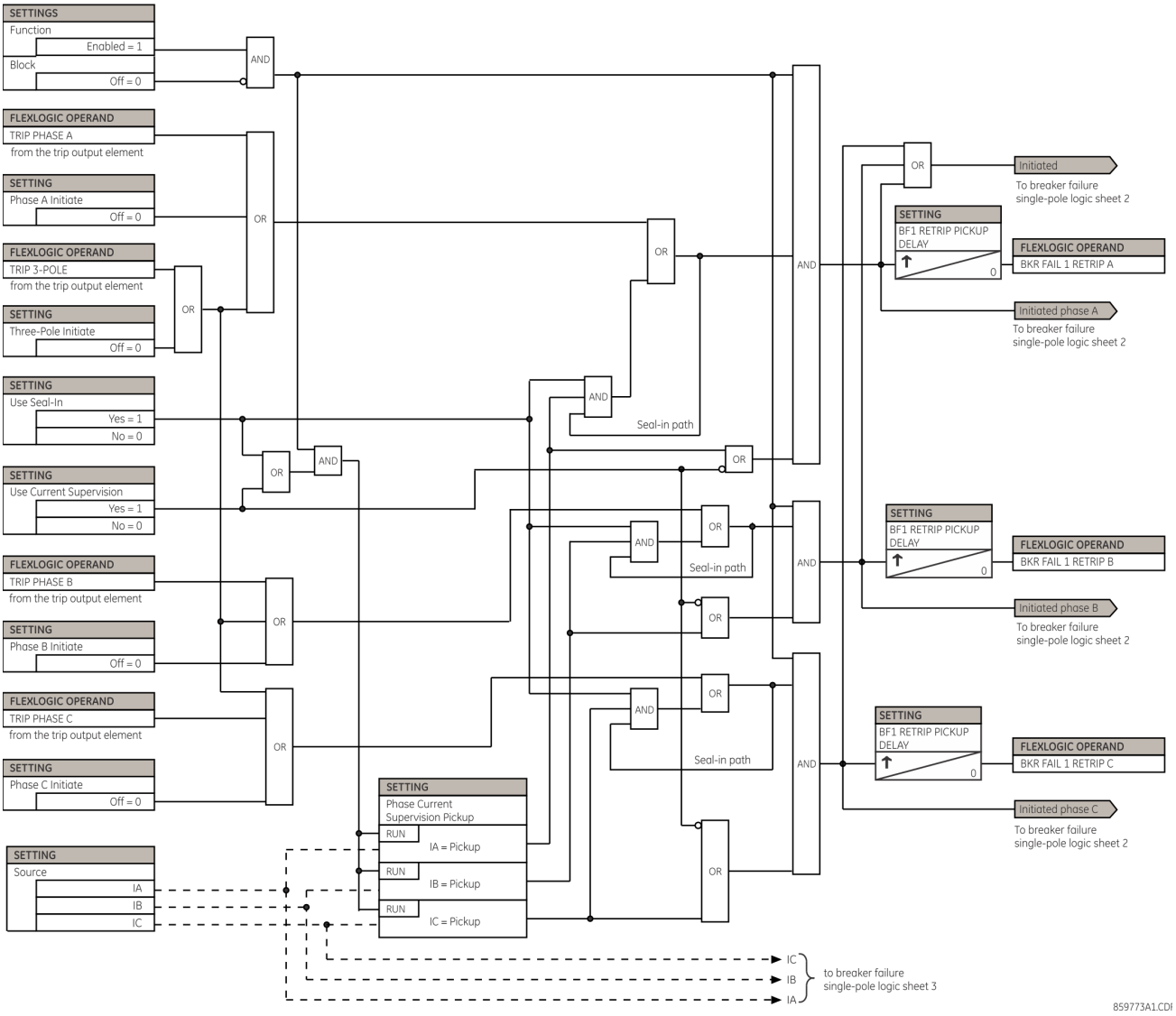

Figure 5-166: Single-pole breaker failure, timers logic

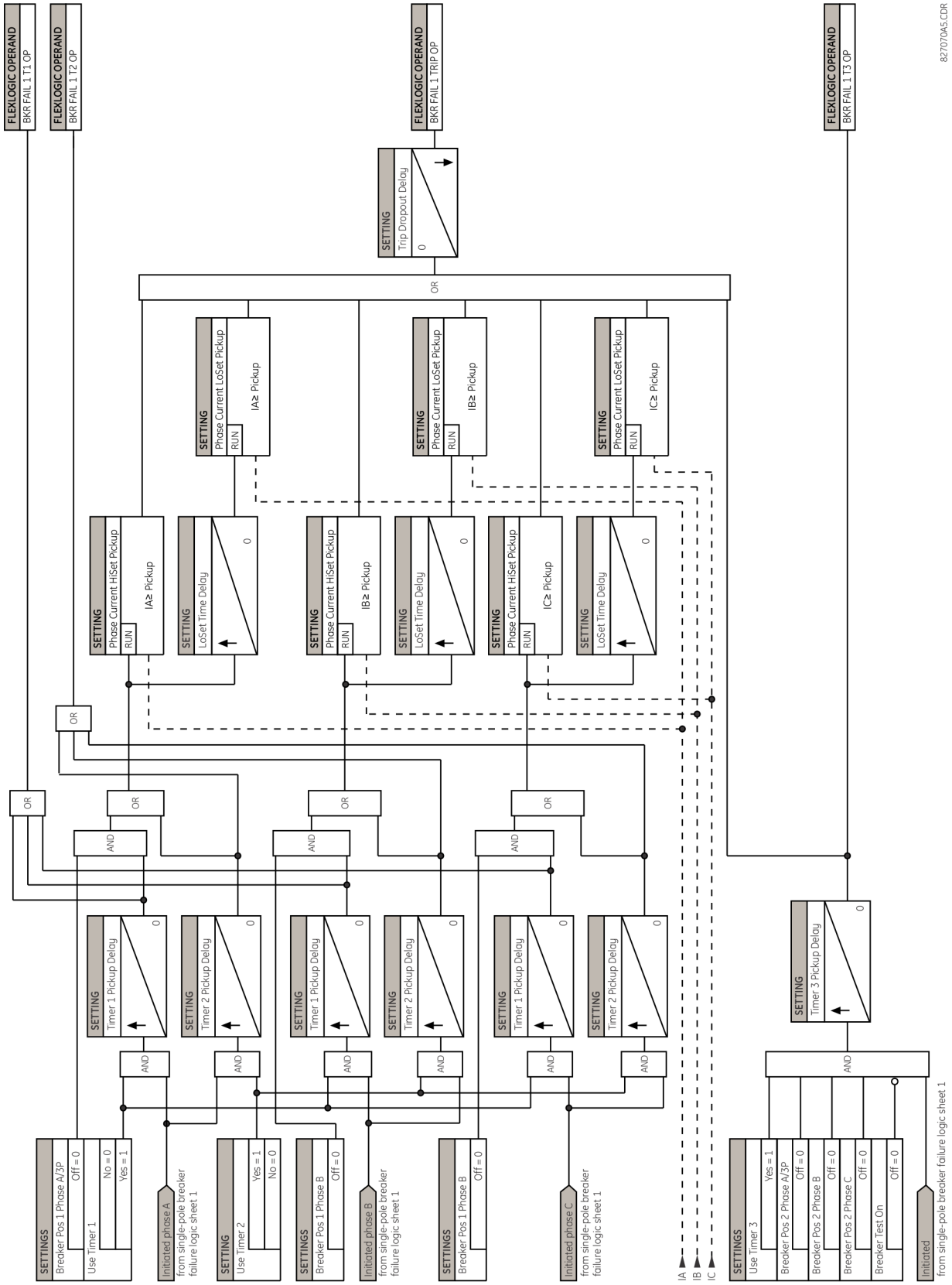

Figure 5-167: Three-pole breaker failure, initiate logic

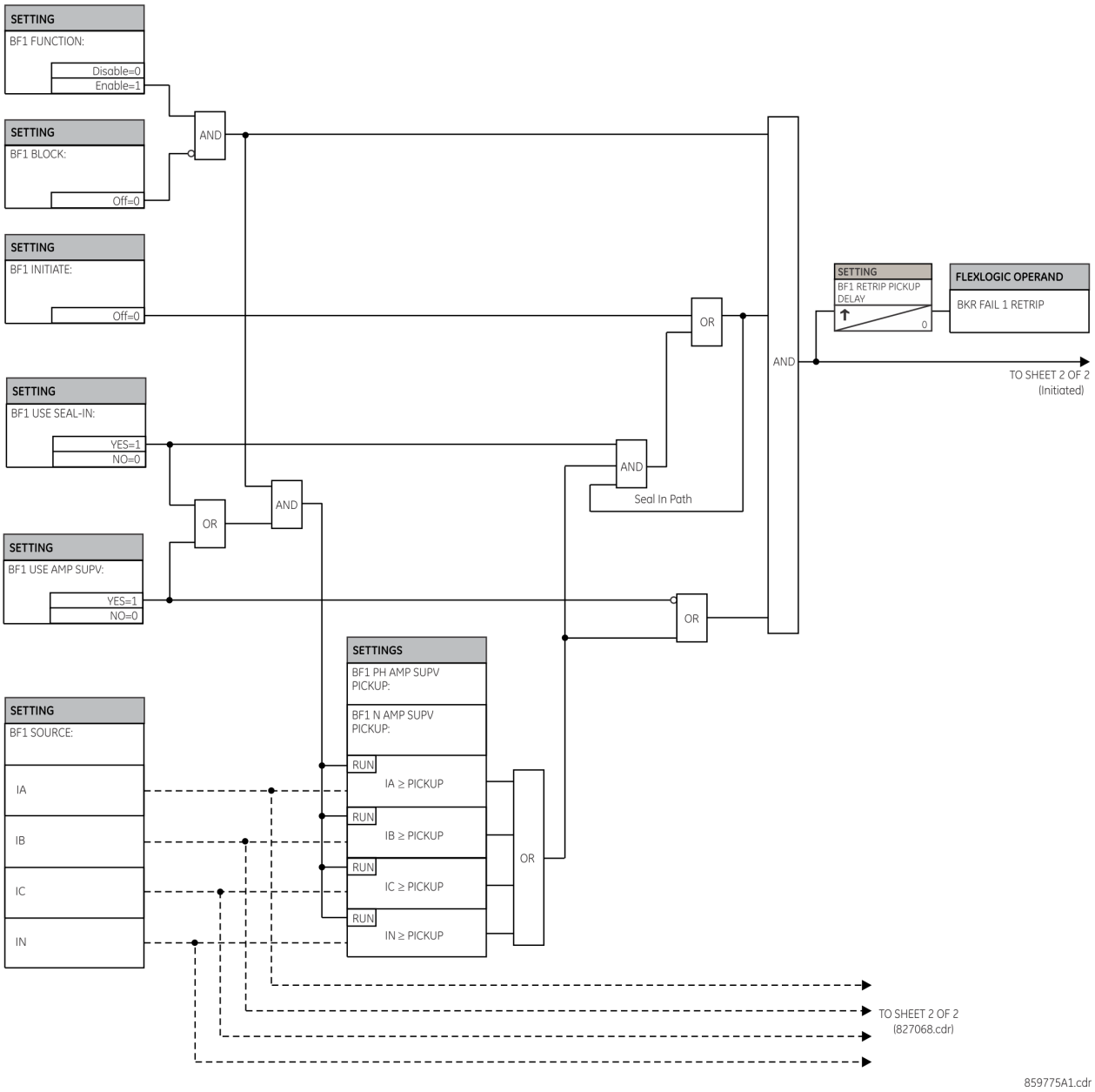

Figure 5-168: Three-pole breaker failure, timers logic

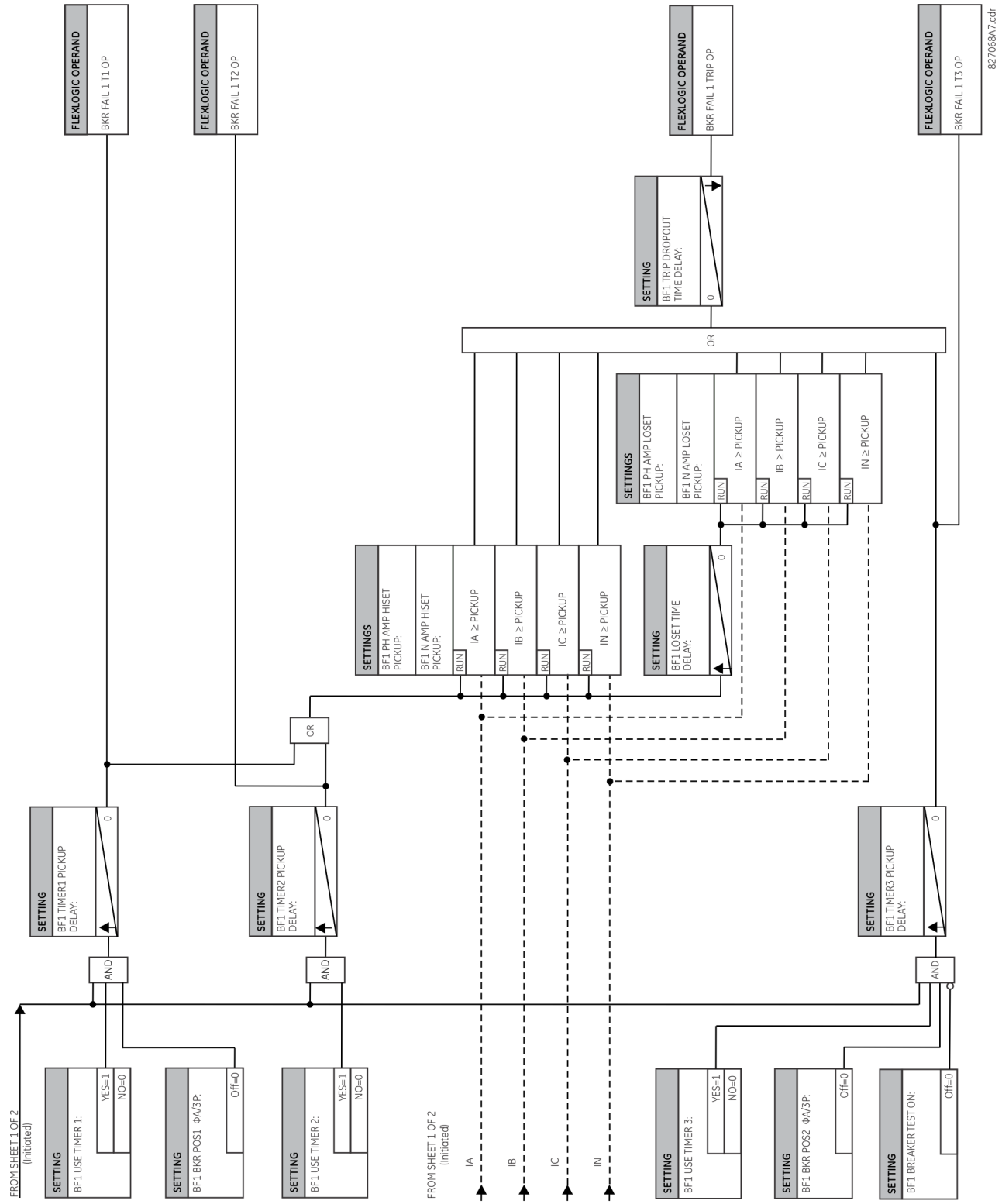

5.7.14 Voltage elements

5.7.14.1 Menu

SETTINGS ⇨⇩ GROUPED ELEMENTS ⇨ SETTING GROUP 1(6) ⇨⇩ VOLTAGE ELEMENTS

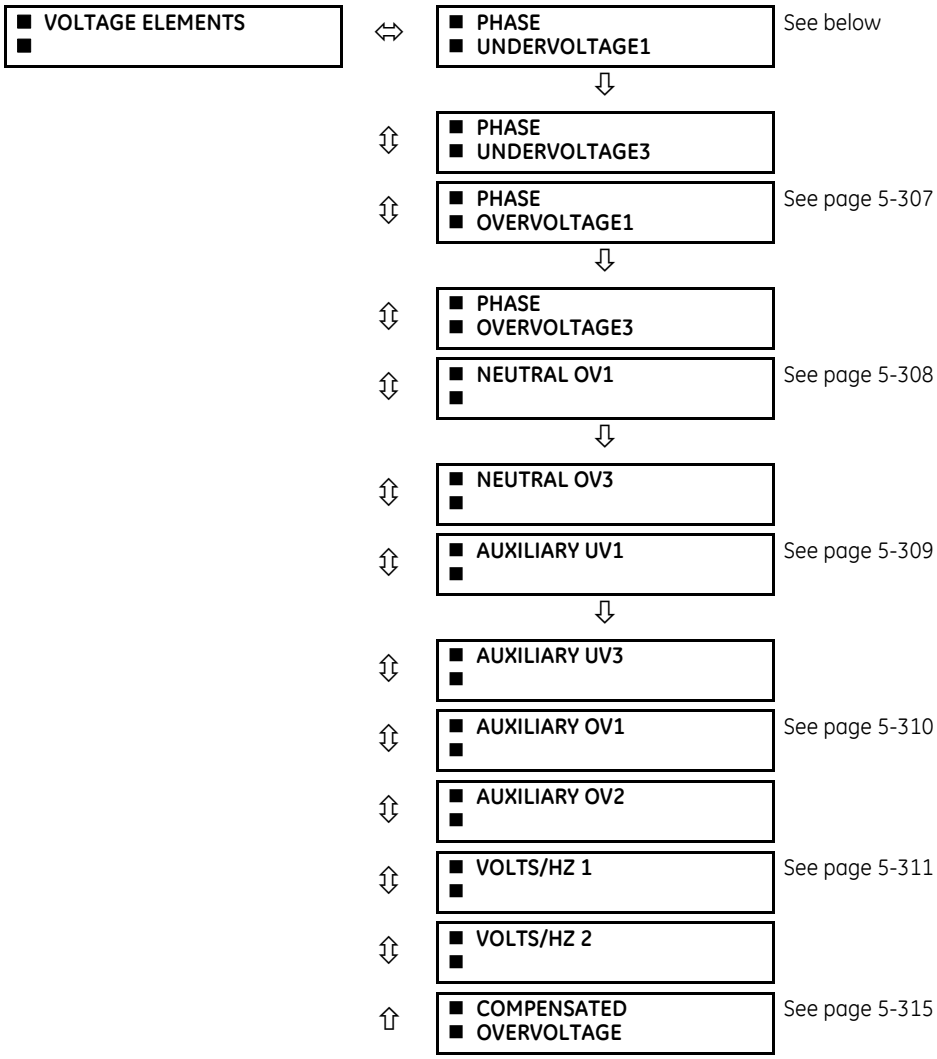

These protection elements can be used for a variety of applications, such as

- **Undervoltage protection** — For voltage sensitive loads, such as induction motors, a drop in voltage increases the drawn current, which can cause dangerous overheating in the motor. The undervoltage protection feature can be used to either cause a trip or generate an alarm when the voltage drops below a specified voltage setting for a specified time delay.
- **Permissive functions** — The undervoltage feature can be used to block the functioning of external devices by operating an output relay when the voltage falls below the specified voltage setting. The undervoltage feature can also be used to block the functioning of other elements through the block feature of those elements.
- **Source transfer schemes** — In the event of an undervoltage, a transfer signal can be generated to transfer a load from its normal source to a standby or emergency power source.

The undervoltage elements can be programmed to have a definite time delay characteristic. The definite time curve operates when the voltage drops below the pickup level for a specified period of time. The time delay is adjustable from 0 to 600.00 seconds in steps of 0.01. The undervoltage elements can also be programmed to have an inverse time delay characteristic.

The undervoltage delay setting defines the family of curves shown as follows.

$$T = \frac{D}{\left(1 - \frac{V}{V_{pickup}}\right)} \qquad \textbf{Eq. 5-36}$$

where

T = operating time
D = undervoltage delay setting (D = 0.00 operates instantaneously)
V = secondary voltage applied to the relay
V_{pickup} = pickup level

Figure 5-169: Inverse time undervoltage curves

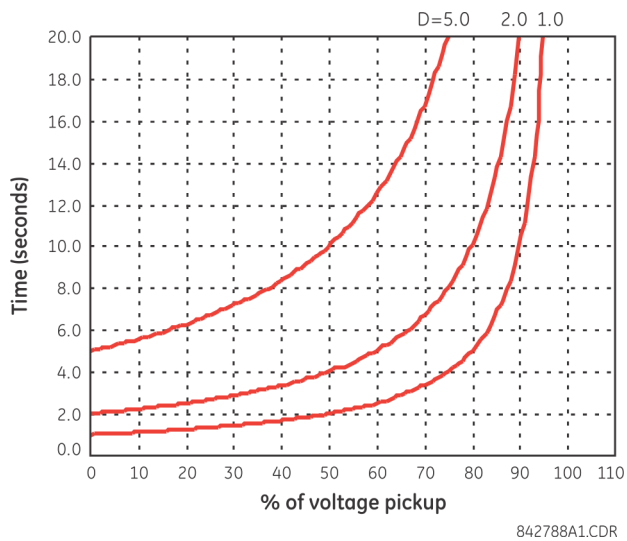

At 0% of pickup, the operating time equals the **PHASE UNDERVOLTAGE DELAY** setting.

5.7.14.2 Phase undervoltage (ANSI 27P, IEC PTUV)

SETTINGS ⇨⇩ GROUPED ELEMENTS ⇨ SETTING GROUP 1(6) ⇨⇩ VOLTAGE ELEMENTS ⇨ PHASE UNDERVOLTAGE1(3)

■ PHASE ■ UNDERVOLTAGE1	⇔	PHASE UV1 FUNCTION: Disabled	Range: Disabled, Enabled
	⇩	PHASE UV1 SIGNAL SOURCE: SRC 1	Range: SRC 1, SRC 2, SRC 3, SRC 4
	⇩	PHASE UV1 MODE: Phase to Ground	Range: Phase to Ground, Phase to Phase
	⇩	PHASE UV1 PICKUP: 1.000 pu	Range: 0.004 to 3.000 pu in steps of 0.001
	⇩	PHASE UV1 CURVE: Definite Time	Range: Definite Time, Inverse Time
	⇩	PHASE UV1 DELAY: 1.00 s	Range: 0.00 to 600.00 s in steps of 0.01
	⇩	PHASE UV1 MINIMUM VOLTAGE: 0.100 pu	Range: 0.000 to 3.000 pu in steps of 0.001
	⇩	PHASE UV1 BLOCK: Off	Range: FlexLogic operand

⇩	**PHASE UV1 TARGET: Self-reset**	Range: Self-reset, Latched, Disabled
⇧	**PHASE UV1 EVENTS: Disabled**	Range: Disabled, Enabled

This element is used to give a time-delay operating characteristic versus the applied fundamental voltage (phase-to-ground or phase-to-phase for wye VT connection, or phase-to-phase for delta VT connection) or as a definite time element. The element resets instantaneously if the applied voltage exceeds the dropout voltage. The delay setting selects the minimum operating time of the phase undervoltage. The minimum voltage setting selects the operating voltage below which the element is blocked (a setting of "0" allows a dead source to be considered a fault condition).

Figure 5-170: Phase undervoltage1 logic

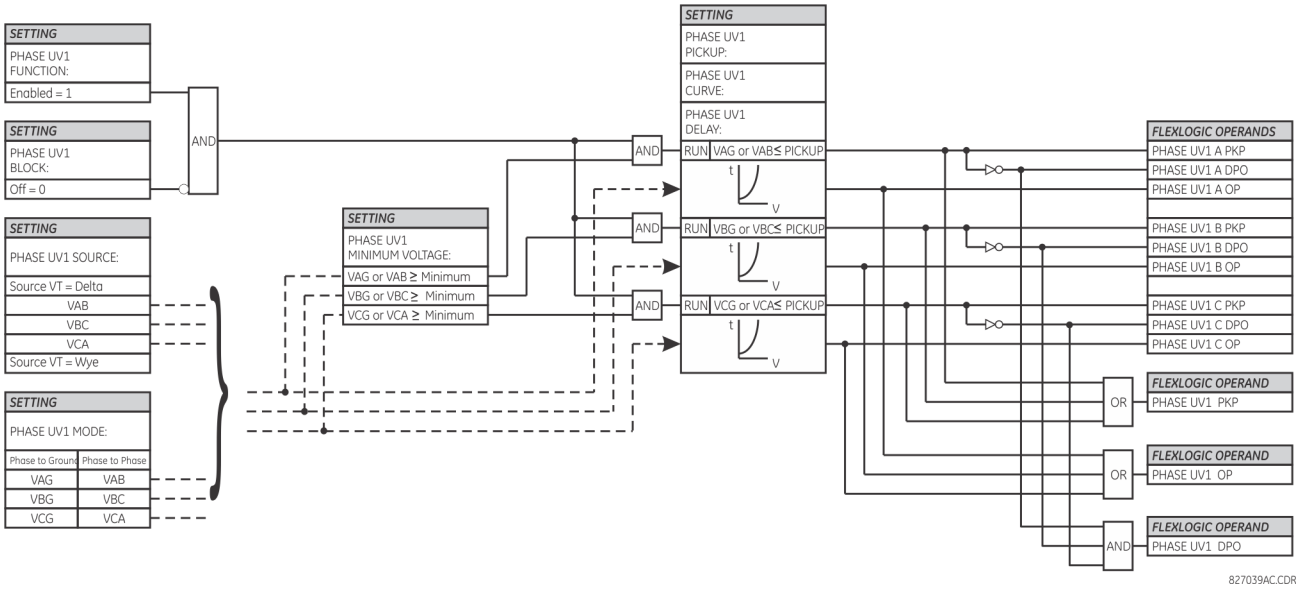

5.7.14.3 Phase overvoltage (ANSI 59P, IEC PTOV)

SETTINGS ⇨⇩ GROUPED ELEMENTS ⇨ SETTING GROUP 1(6) ⇨⇩ VOLTAGE ELEMENTS ⇨⇩ PHASE OVERVOLTAGE1(3)

■ **PHASE** ■ **OVERVOLTAGE1**	⇔	**PHASE OV1 FUNCTION: Disabled**	Range: Disabled, Enabled
	⇩	**PHASE OV1 SIGNAL SOURCE: SRC 1**	Range: SRC 1, SRC 2, SRC 3, SRC 4
	⇩	**PHASE OV1 PICKUP: 1.000 pu**	Range: 0.004 to 3.000 pu in steps of 0.001
	⇩	**PHASE OV1 PICKUP DELAY: 1.00 s**	Range: 0.00 to 600.00 s in steps of 0.01
	⇩	**PHASE OV1 RESET DELAY: 1.00 s**	Range: 0.00 to 600.00 s in steps of 0.01
	⇩	**PHASE OV1 BLOCK: Off**	Range: FlexLogic Operand
	⇩	**PHASE OV1 TARGET: Self-reset**	Range: Self-reset, Latched, Disabled
	⇧	**PHASE OV1 EVENTS: Disabled**	Range: Disabled, Enabled

There are three phase overvoltage elements available. A phase overvoltage element is used as an instantaneous element with no intentional time delay or as a definite time element. The input voltage is the phase-to-phase voltage, either measured directly from delta-connected VTs or as calculated from phase-to-ground (wye) connected VTs. The figure shows specific voltages to be used for each phase.

Figure 5-171: Phase overvoltage logic

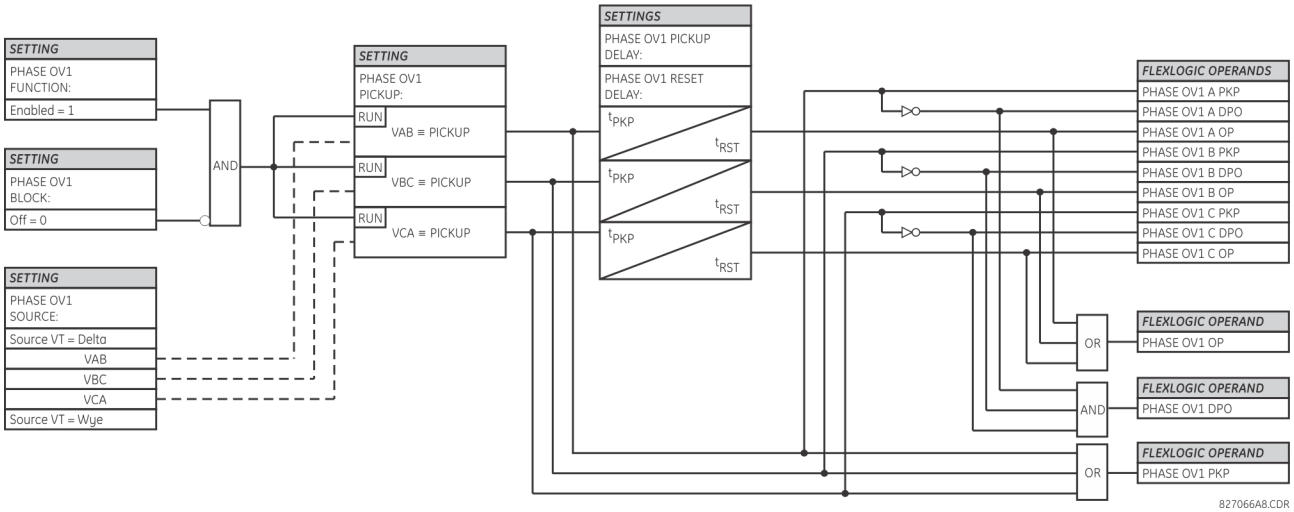

NOTE

If the source VT is wye-connected, then the phase overvoltage pickup condition is $V > \sqrt{3} \times$ Pickup for V_{AB}, V_{BC}, and V_{CA}.

5.7.14.4 Neutral overvoltage (ANSI 59N, IEC PTOV)

SETTINGS ⇨⇩ GROUPED ELEMENTS ⇨ SETTING GROUP 1(6) ⇨⇩ VOLTAGE ELEMENTS ⇨⇩ NEUTRAL OV1(3)

■ **NEUTRAL OV1** ■	⇔	**NEUTRAL OV1 FUNCTION: Disabled**	Range: Disabled, Enabled
	⇩	**NEUTRAL OV1 SIGNAL SOURCE: SRC 1**	Range: SRC 1, SRC 2, SRC 3, SRC 4
	⇩	**NEUTRAL OV1 PICKUP: 0.300 pu**	Range: 0.004 to 3.000 pu in steps of 0.001
	⇩	**NEUTRAL OV1 CURVE: Definite Time**	Range: Definite Time, FlexCurve A, FlexCurve B, FlexCurve C
	⇩	**NEUTRAL OV1 PICKUP: DELAY: 1.00 s**	Range: 0.00 to 600.00 s in steps of 0.01
	⇩	**NEUTRAL OV1 RESET: DELAY: 1.00 s**	Range: 0.00 to 600.00 s in steps of 0.01
	⇩	**NEUTRAL OV1 BLOCK: Off**	Range: FlexLogic operand
	⇩	**NEUTRAL OV1 TARGET: Self-reset**	Range: Self-reset, Latched, Disabled
	⇩	**NEUTRAL OV1 EVENTS: Disabled**	Range: Disabled, Enabled

There are three neutral overvoltage elements available. The neutral overvoltage element can be used to detect asymmetrical system voltage condition due to a ground fault or to the loss of one or two phases of the source. The element responds to the system neutral voltage (3V_0), calculated from the phase voltages. The nominal secondary voltage of the phase voltage channels entered under **SETTINGS ⇨⇩ SYSTEM SETUP ⇨ AC INPUTS ⇨⇩ VOLTAGE BANK ⇨ PHASE VT SECONDARY** is the p.u. base used when setting the pickup level.

The neutral overvoltage element can provide a time-delayed operating characteristic versus the applied voltage (initialized from FlexCurves A, B, or C) or be used as a definite time element. The **NEUTRAL OV1 PICKUP DELAY** setting applies only if the **NEUTRAL OV1 CURVE** setting is "Definite Time." The source assigned to this element must be configured for a phase VT.

VT errors and normal voltage unbalance must be considered when setting this element. This function requires the VTs to be wye-connected.

Figure 5-172: Neutral overvoltage1 logic

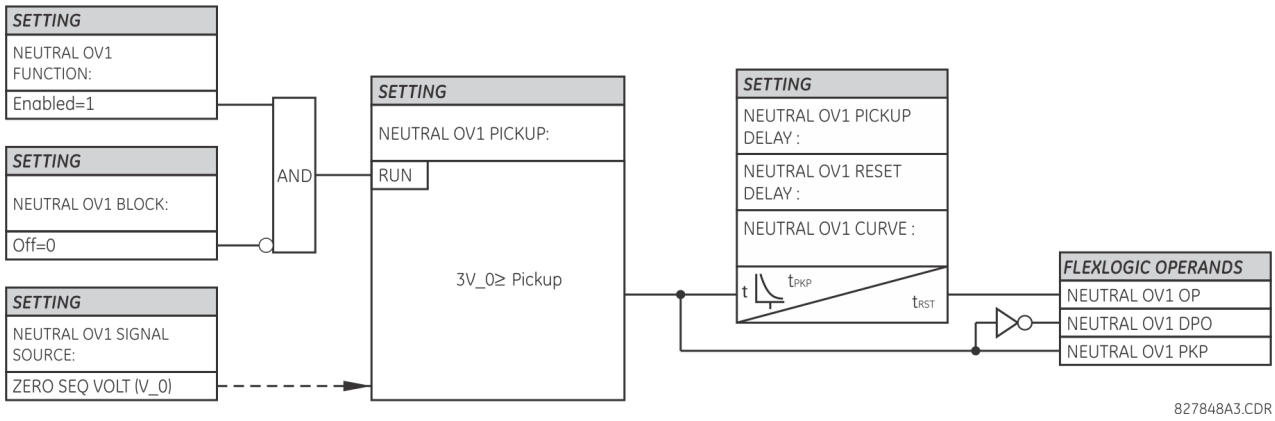

5.7.14.5 Auxiliary undervoltage (ANSI 27X, IEC PTUV)

SETTINGS ⇨⇩ GROUPED ELEMENTS ⇨ SETTING GROUP 1(6) ⇨⇩ VOLTAGE ELEMENTS ⇨⇩ AUXILIARY UV1(3)

■ **AUXILIARY UV1** ■	⇔	**AUX UV1 FUNCTION: Disabled**	Range: Disabled, Enabled
	⇩	**AUX UV1 SIGNAL SOURCE: SRC 1**	Range: SRC 1, SRC 2, SRC 3, SRC 4
	⇩	**AUX UV1 PICKUP: 0.700 pu**	Range: 0.004 to 3.000 pu in steps of 0.001
	⇩	**AUX UV1 CURVE: Definite Time**	Range: Definite Time, Inverse Time
	⇩	**AUX UV1 DELAY: 1.00 s**	Range: 0.00 to 600.00 s in steps of 0.01
	⇩	**AUX UV1 MINIMUM: VOLTAGE: 0.100 pu**	Range: 0.000 to 3.000 pu in steps of 0.001
	⇩	**AUX UV1 BLOCK: Off**	Range: FlexLogic operand
	⇩	**AUX UV1 TARGET: Self-reset**	Range: Self-reset, Latched, Disabled
	⇧	**AUX UV1 EVENTS: Disabled**	Range: Disabled, Enabled

The L90 contains one auxiliary undervoltage element for each VT bank. This element monitors undervoltage conditions of the auxiliary voltage.

The **AUX UV1 PICKUP** selects the voltage level at which the time undervoltage element starts timing. The nominal secondary voltage of the auxiliary voltage channel entered under **SETTINGS ⇨⇩ SYSTEM SETUP ⇨ AC INPUTS ⇨⇩ VOLTAGE BANK X5 ⇨⇩ AUXILIARY VT X5 SECONDARY** is the per-unit base used when setting the pickup level.

The **AUX UV1 DELAY** setting selects the minimum operating time of the auxiliary undervoltage element.

Both **AUX UV1 PICKUP** and **AUX UV1 DELAY** settings establish the operating curve of the undervoltage element. The auxiliary undervoltage element can be programmed to use either definite time delay or inverse time delay characteristics. The operating characteristics and equations for both definite and inverse time delay are as for the phase undervoltage element.

The element resets instantaneously. The minimum voltage setting selects the operating voltage below which the element is blocked.

Figure 5-173: Auxiliary undervoltage logic

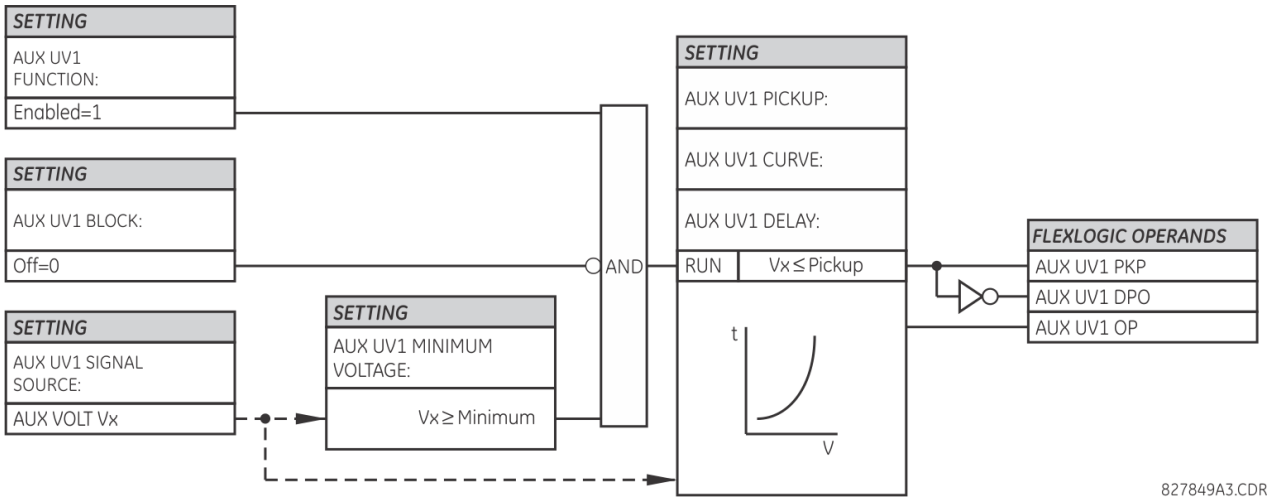

5.7.14.6 Auxiliary overvoltage (ANSI 59X, IEC PTOV)

SETTINGS ⇨⇩ GROUPED ELEMENTS ⇨ SETTING GROUP 1(6) ⇨⇩ VOLTAGE ELEMENTS ⇨⇩ AUXILIARY OV1(2)

■ **AUXILIARY OV1** ■	⇔	**AUX OV1 FUNCTION: Disabled**	Range: Disabled, Enabled
	⇩	**AUX OV1 SIGNAL SOURCE: SRC 1**	Range: SRC 1, SRC 2, SRC 3, SRC 4
	⇩	**AUX OV1 PICKUP: 0.300 pu**	Range: 0.004 to 3.000 pu in steps of 0.001
	⇩	**AUX OV1 PICKUP DELAY: 1.00 s**	Range: 0.00 to 600.00 s in steps of 0.01
	⇩	**AUX OV1 RESET DELAY: 1.00 s**	Range: 0.00 to 600.00 s in steps of 0.01
	⇩	**AUX OV1 BLOCK: Off**	Range: FlexLogic operand
	⇩	**AUX OV1 TARGET: Self-reset**	Range: Self-reset, Latched, Disabled
	⇧	**AUX OV1 EVENTS: Disabled**	Range: Disabled, Enabled

The L90 contains one auxiliary overvoltage element for each VT bank. This element is intended for monitoring overvoltage conditions of the auxiliary voltage. The nominal secondary voltage of the auxiliary voltage channel entered under **SYSTEM SETUP ⇨ AC INPUTS ⇩⇨ VOLTAGE BANK X5 ⇩⇨ AUXILIARY VT X5 SECONDARY** is the per-unit (pu) base used when setting the pickup level.

A typical application for this element is monitoring the zero-sequence voltage (3V_0) supplied from an open-corner-delta VT connection.

Figure 5-174: Auxiliary overvoltage logic

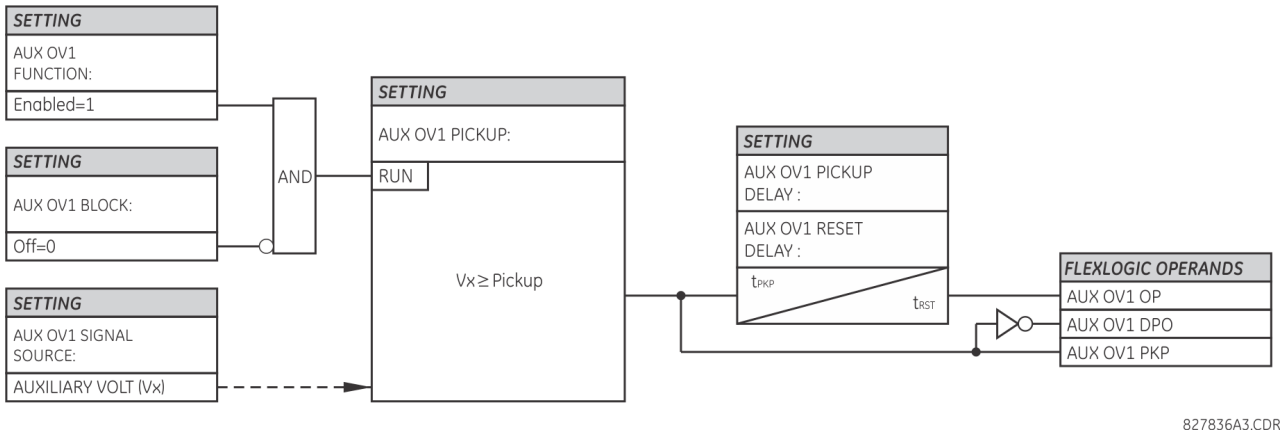

5.7.14.7 Volts per hertz (ANSI 24, IEC PVPH)

SETTINGS ⇨⇩ GROUPED ELEMENTS ⇨ SETTING GROUP 1(6) ⇨⇩ VOLTAGE ELEMENTS ⇨⇩ VOLTS/HZ 1(2)

■ **VOLTS/HZ 1** ■	⇔	**VOLTS/HZ 1 FUNCTION: Disabled**	Range: Disabled, Enabled
	⇩	**VOLTS/HZ 1 SOURCE: SRC 1**	Range: SRC 1, SRC 2, SRC 3, SRC 4
	⇩	**VOLTS/HZ 1 VOLTAGE MODE: Phase to Ground**	Range: Phase to Ground, Phase to Phase
	⇩	**VOLTS/HZ 1 PICKUP: 0.80 pu**	Range: 0.80 to 4.00 pu in steps of 0.01
	⇩	**VOLTS/HZ 1 CURVE: Definite Time**	Range: Definite Time, Inverse A, Inverse B, Inverse C, FlexCurve A, FlexCurve B, FlexCurve C, FlexCurve D
	⇩	**VOLTS/HZ 1 TD MULTIPLIER: 1.00**	Range: 0.05 to 600.00 in steps of 0.01
	⇩	**VOLTS/HZ 1 T-RESET: 1.0 s**	Range: 0.0 to 1000.0 s in steps of 0.1
	⇩	**VOLTS/HZ 1 BLOCK: Off**	Range: FlexLogic operand
	⇩	**VOLTS/HZ 1 TARGET: Self-reset**	Range: Self-reset, Latched, Disabled
	⇧	**VOLTS/HZ 1 EVENTS: Disabled**	Range: Disabled, Enabled

SOFTWARE OPTION

For the L90, this feature is optional and requires software option 24 or 83. Check the order code of your device.

The per-unit volts-per-hertz (V/Hz) value is calculated using the maximum of the three-phase voltage inputs or the auxiliary voltage channel Vx input, if the source is not configured with phase voltages. To use the V/Hz element with auxiliary voltage, set **SYSTEM SETUP ⇨⇩ SIGNAL SOURCES ⇨ SOURCE 1(6) ⇨⇩ SOURCE 1(6) PHASE VT** to "None" and **SOURCE 1(6) AUX VT** to

the corresponding voltage input bank. If there is no voltage on the relay terminals in either case, the per-unit V/Hz value is automatically set to "0". The per unit value is established as per voltage and nominal frequency power system settings as follows:

1. If the phase voltage inputs defined in the source menu are used for V/Hz operation, then "1 pu" is the selected **SYSTEM SETUP ⇨ AC INPUTS ⇨⇩ VOLTAGE BANK N ⇨⇩ PHASE VT N SECONDARY** setting, divided by the divided by the **SYSTEM SETUP ⇨⇩ POWER SYSTEM ⇨ NOMINAL FREQUENCY** setting.
2. If the voltage bank connection value is selected as "Delta", then the phase-to-phase nominal voltage is used to define the per-unit value. If the voltage bank connection value is selected as "Wye", then the **VOLTS/HZ 1 VOLTAGE MODE** setting further defines the operating quantity and per-unit value for this element. If the voltage mode is set as "Phase to Phase", then the operating quantity for this element is the phase-to-phase nominal voltage. Likewise, if the voltage mode is set to "Phase to Ground", then the operating quantity for this element is the phase-to-ground nominal voltage. It is beneficial to use the phase-to-phase voltage mode for this element when the L90 device is applied on an isolated or resistance-grounded system.
3. When the auxiliary voltage Vx is used (regarding the condition for "None" phase voltage setting mentioned above), then the 1 pu value is the **SYSTEM SETUP ⇨ AC INPUTS ⇨⇩ VOLTAGE BANK N ⇨⇩ AUXILIARY VT N SECONDARY** setting divided by the **SYSTEM SETUP ⇨⇩ POWER SYSTEM ⇨ NOMINAL FREQUENCY** setting.
4. If V/Hz source is configured with both phase and auxiliary voltages, the maximum phase among the three voltage channels at any given point in time is the input voltage signal for element operation, and therefore the per-unit value is calculated as described in Step 1. If the measured voltage of all three phase voltages is 0, than the per-unit value becomes automatically 0 regardless of the presence of auxiliary voltage.

Figure 5-175: Volts per hertz logic

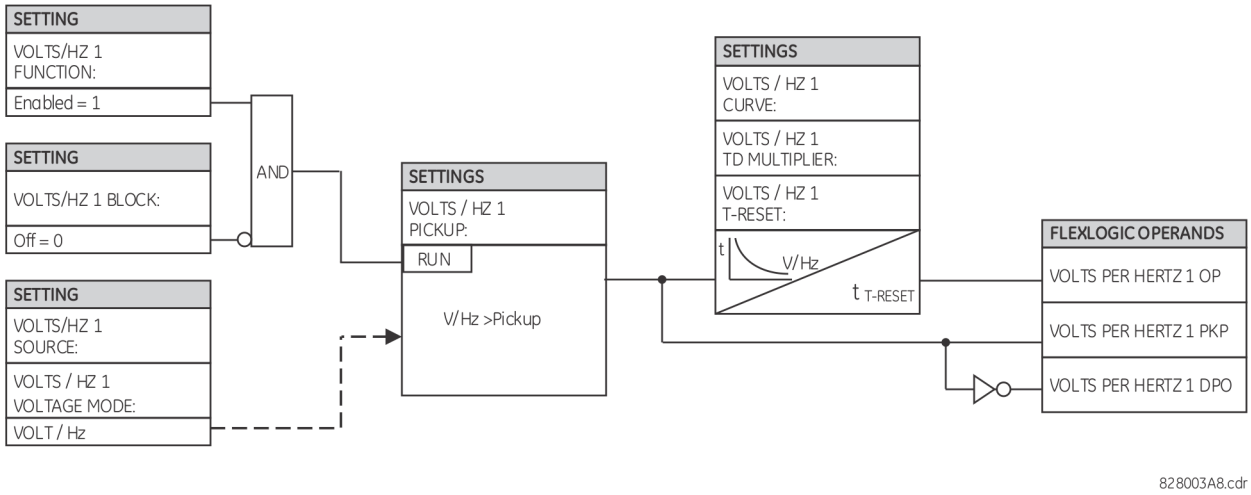

The element has a linear reset characteristic. The reset time can be programmed to match the cooling characteristics of the protected equipment. The element fully resets from the trip threshold in **VOLTS/HZ T-RESET** seconds. The V/Hz element can be used as an instantaneous element with no intentional time delay or as a Definite or Inverse timed element.

The characteristics of the inverse curves are as follows.

Definite time

For the definite time curve, T(sec.) = TD multiplier. For example, setting the TD multiplier to 20 results a time delay of 20 seconds to operate when above the Volts/Hz pickup setting. Instantaneous operation can be obtained the same way by setting the TD multiplier to "0".

Inverse curve A

The curve for the volts/hertz inverse curve A shape is derived from the formula:

$$T = \frac{TDM}{\left[\left(\frac{V}{F}\right)/Pickup\right]^2 - 1} \text{ when } \frac{V}{F} > Pickup \qquad \textbf{Eq. 5-37}$$

where

T = Operating Time
TDM = Time Delay Multiplier (delay in seconds)
V = fundamental RMS value of voltage (pu)
F = frequency of voltage signal (pu)
Pickup = volts-per-hertz pickup setpoint (pu)

The figure shows the volts/hertz inverse A curves.

Figure 5-176: Volts-per-hertz curves, inverse curve A

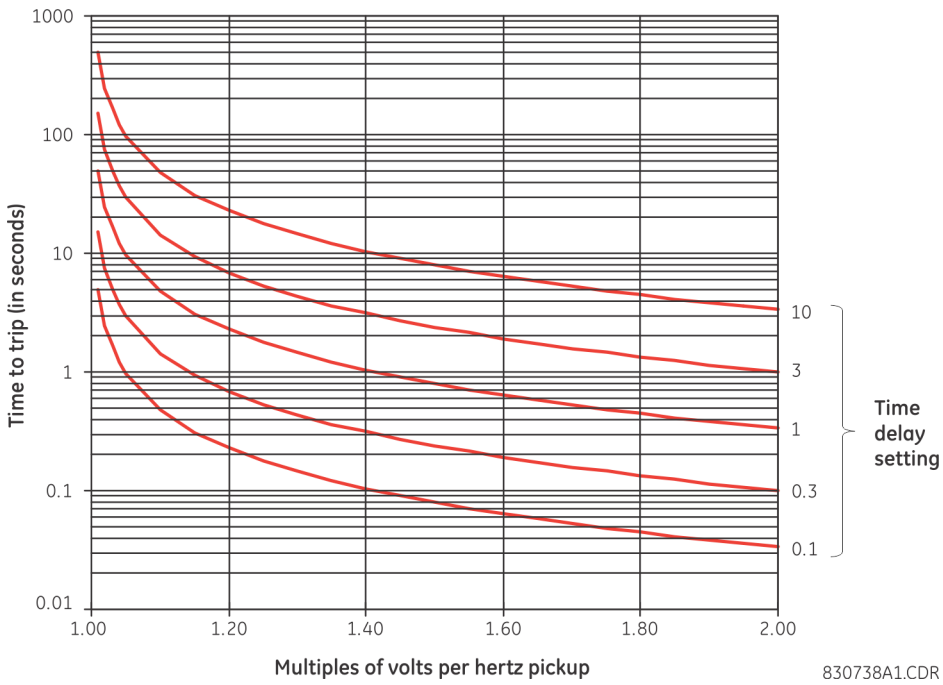

Inverse curve B

The curve for the Volts/Hertz Inverse Curve B shape is derived from the formula:

$$T = \frac{TDM}{\left[\left(\frac{V}{F}\right)/Pickup\right] - 1} \text{ when } \frac{V}{F} > Pickup \qquad \textbf{Eq. 5-38}$$

where

T = Operating Time
TDM = Time Delay Multiplier (delay in sec.)
V = fundamental RMS value of voltage (pu)
F = frequency of voltage signal (pu)
Pickup = volts-per-hertz pickup setpoint (pu)

The figure shows the volts/hertz inverse B curves.

Figure 5-177: Volts-per-hertz curves, inverse curve B

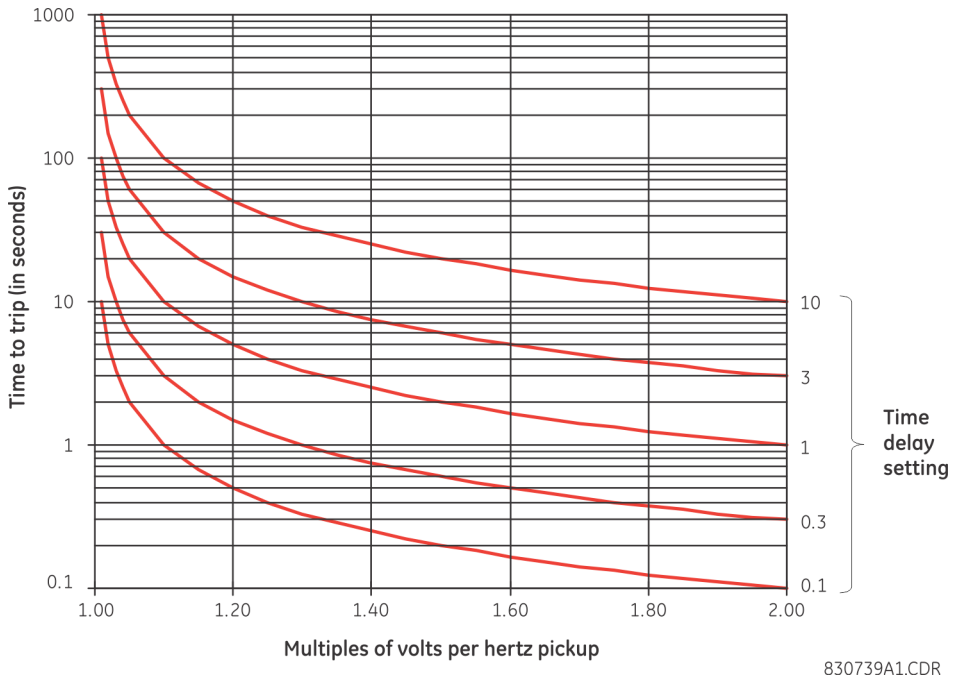

5

Inverse curve C

The curve for the Volts/Hertz Inverse Curve C shape is derived from the formula:

$$T = \frac{TDM}{\left[\left(\frac{V}{F}\right) / Pickup\right]^{0.5} - 1} \quad \text{when } \frac{V}{F} > Pickup \qquad \textbf{Eq. 5-39}$$

where

T = Operating Time
TDM = Time Delay Multiplier (delay in sec.)
V = fundamental RMS value of voltage (pu)
F = frequency of voltage signal (pu)
Pickup = volts-per-hertz pickup setpoint (pu)

The figure shows the volts/hertz inverse C curves.

Figure 5-178: Volts-per-hertz curves, inverse curve C

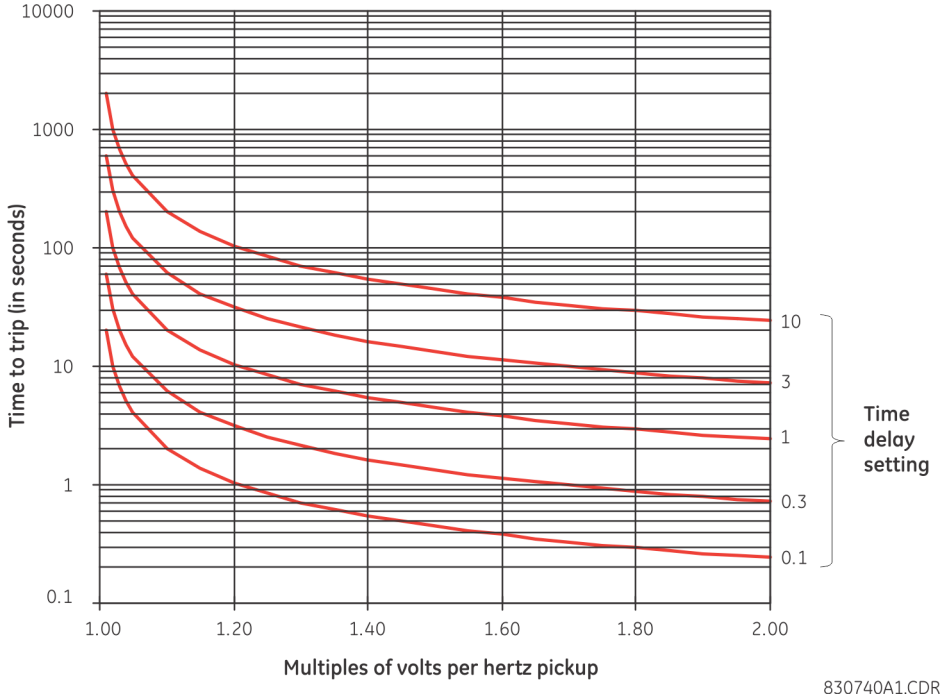

5.7.14.8 Compensated overvoltage (ANSI 59C, IEC PTOV)

SETTINGS ⇨⇩ GROUPED ELEMENTS ⇨ SETTING GROUP 1(6) ⇨⇩ VOLTAGE ELEMENTS ⇨⇩ COMPENSATED OVERVOLTAGE

■ COMPENSATED ■ OVERVOLTAGE	⇔	COMPENSATED OV FUNCTION: Disabled	Range: Disabled, Enabled
	⇩	COMPENSATED OV SOURCE: SRC 1	Range: SRC 1, SRC 2, SRC 3, SRC 4
	⇩	COMPENSATED OV Zc MAG: 2.00 ohm	Range: 0.00 to 500.00 ohms in steps of 0.01
	⇩	COMPENSATED OV Zc ANG: 90°	Range: 30 to 90° in steps of 1
	⇩	COMPENSATED OV I_1max: 0.20 pu	Range: 0.01 to 1.00 pu in steps of 0.01
	⇩	COMPENSATED OV STG1 PKP: 1.300 pu	Range: 0.250 to 3.000 pu in steps of 0.01
	⇩	COMPENSATED OV STG1 DELAY: 1.00 sec	Range: 0.00 to 600.00 seconds in steps of 0.01
	⇩	COMPENSATED OV STG2 PKP: 1.300 pu	Range: 0.250 to 3.000 pu in steps of 0.01
	⇩	COMPENSATED OV STG2 DELAY: 1.00 sec	Range: 0.00 to 600.00 seconds in steps of 0.01
	⇩	COMPENSATED OV STG3 PKP: 1.300 pu	Range: 0.250 to 3.000 pu in steps of 0.01
	⇩	COMPENSATED OV STG3 DELAY: 1.00 sec	Range: 0.00 to 600.00 seconds in steps of 0.01

⇕	**COMPENSATED OV BLK: Off**	Range: FlexLogic operand
⇕	**COMPENSATED OV TARGET: Self-reset**	Range: Self-reset, Latched, Disabled
⇧	**COMPENSATED OV EVENTS: Disabled**	Range: Disabled, Enabled

The compensated overvoltage function provides protection against an overvoltage due to the opening of the remote terminal of a transmission line—the so called the Ferranti effect. This can be achieved using a transfer-tripping scheme. However, with high voltage, more corona can exist on the line and inhibit the proper reception of a carrier-transfer-trip signal. Also, the presence of a line with an open terminal in weak systems can raise the voltage level of the local bus. Detecting and tripping a line with an open terminal can prevent tripping at the local bus in this case.

Figure 5-179: Transmission line with remote terminal open

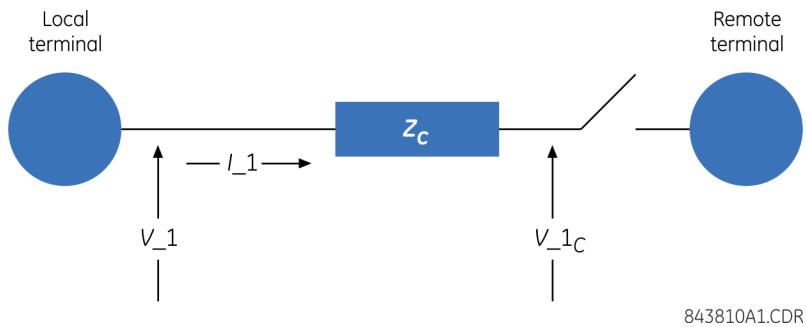

Figure 5-180: Phasor diagram

The function approximates the voltage rise at the far end of the transmission line according to the following relationship:

$$V_1_C(pu) = \left| \frac{V_1 - I_1 \times Z_{C_mag} \times e^{j(Z_{C_ang})}}{V_{nominal}} \right| \qquad \textbf{Eq. 5-40}$$

where

V_1 is the positive-sequence voltage (phasor quantity) in secondary volts measured at the local terminal
I_1 is the positive-sequence current (phasor quantity) in secondary amps measured at the local terminal
$V_{nominal}$ is the phase VT secondary setting in the case of wye VTs and the phase VT secondary setting divided by $\sqrt{3}$ in the case of delta VTs
Z_{C_mag} and Z_{C_ang} represent an impedance between the local and remote terminals
V_1_C is the calculated positive-sequence voltage magnitude at the remote terminal

If the magnitude of Z_C is set to one-half the series impedance of the line ($R + jX_L$), the compensated voltage is approximately equal to the positive-sequence voltage at the remote end of the line. A more accurate setting of Z_C can be made if the positive-sequence charging current and the voltages at the local and remote line ends resulting from an open breaker are known. In this case, the required reach setting is:

$$Z_C = \frac{V_{local} - V_{remote}}{I_{charge}} \qquad \textbf{Eq. 5-41}$$

The following settings are available.

COMPENSATED OV Zc MAG — This setting specifies the magnitude of the impedance Z_C in secondary ohms. Set it to half the positive-sequence series impedance of the line. Alternately, if the positive-sequence charging currents and local and remote voltages are known, then this value can be calculated from equation above.

COMPENSATED OV Zc ANG — This setting specifies the angle of the impedance Z_C in degrees.

COMPENSATED OV I_1max — This setting specifies the maximum expected positive-sequence line current for which a remote overvoltage is anticipated.

COMPENSATED OV STG1 PKP, **COMPENSATED OV STG2 PKP**, **COMPENSATED OV STG3 PKP** — These settings specify the pickup level for each of the three stages. If any stage is set with no intentional time delay, then set the pickup setting 15% above the anticipated steady state overvoltage to prevent an operation during line energization. A stage that is not used can be set to its maximum setting value (3.000 pu) to effectively disable it.

COMPENSATED OV STG1 DELAY, **COMPENSATED OV STG2 DELAY**, **COMPENSATED OV STG3 DELAY** — These settings specify the time delay for each of the three stages in seconds.

Figure 5-181: Compensated overvoltage logic

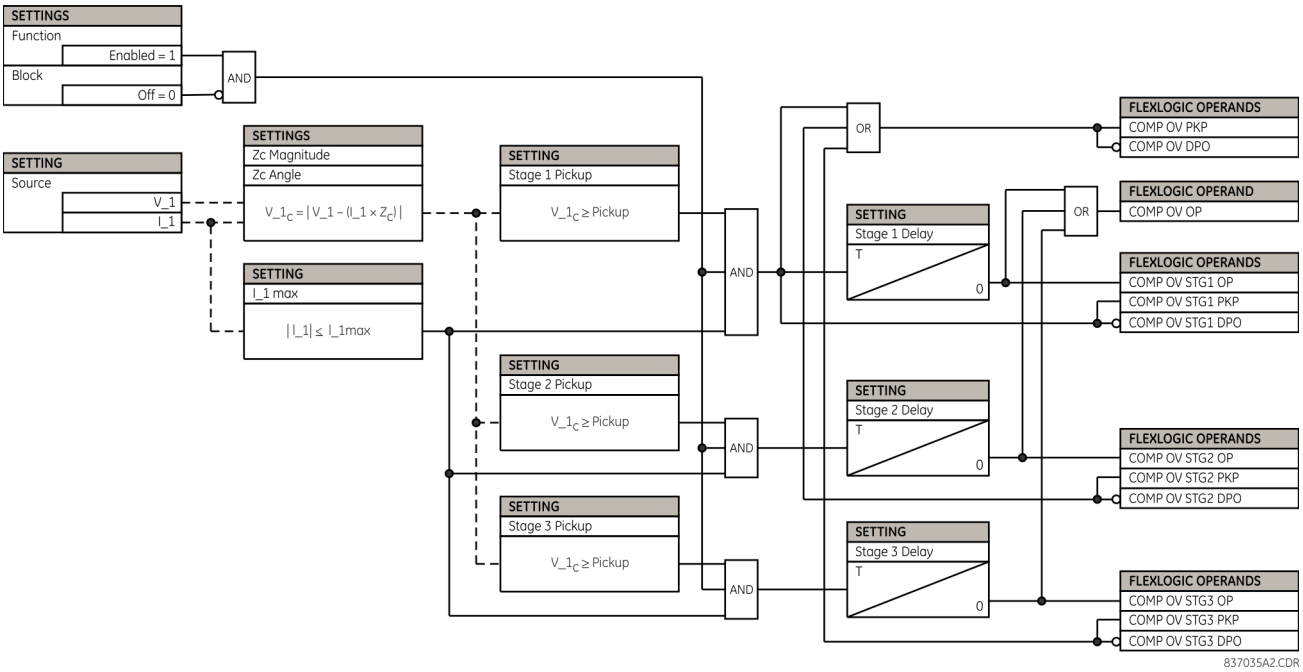

5.7.15 Supervising elements

5.7.15.1 Menu

SETTINGS ⇨⇩ GROUPED ELEMENTS ⇨⇩ SETTING GROUP 1(6) ⇨⇩ SUPERVISING ELEMENTS

■ SUPERVISING ■ ELEMENTS	⇔	■ DISTURBANCE ■ DETECTOR	See below
	⇧	■ 87L TRIP ■	See page 5-321

5.7.15.2 Disturbance detector

SETTINGS ⇨⇩ GROUPED ELEMENTS ⇨⇩ SETTING GROUP 1(6) ⇨⇩ SUPERVISING ELEMENTS ⇨ DISTURBANCE DETECTOR

■ DISTURBANCE ■ DETECTOR	⇔	**DD FUNCTION: Disabled**	Range: Disabled, Enabled
	⇩	**DD NON-CURRENT SUPV: Off**	Range: FlexLogic operand
	⇩	**DD CONTROL LOGIC: Off**	Range: FlexLogic operand
	⇩	**DD LOGIC SEAL-IN: Off**	Range: FlexLogic operand
	⇩	**DD SEAL-IN BY 87LG: Disabled**	Range: Disabled, Enabled
	⇩	**DD VOLTAGE SUPV: Disabled**	Range: Disabled, Enabled
	⇧	**DD EVENTS: Disabled**	Range: Disabled, Enabled

The disturbance detector (50DD) element is an 87L-dedicated sensitive current disturbance detector that is used to detect any disturbance on the protected system. It is intended for such functions as trip output supervision and starting oscillography The disturbance detector also signals the 87L function that a disturbance (possible fault) occurred and to resize the operating window to remove the pre-fault current. It is essential to have the disturbance detector enabled for applications where the 87L operating time is critical.

If the disturbance detector is used to supervise the operation of the 87LP or 87LG function, it is recommended that the 87L trip element be used. The 50DD SV disturbance detector FlexLogic operand must then be assigned to an **87LP TRIP SUPV** setting, and the 50DD SV 87LG must be assigned to an **87LG TRIP SUPV** setting as well if the ground differential function is enabled.

The disturbance detector function measures the magnitude of the negative-sequence current (I_2), the magnitude of the zero-sequence current (I_0), the change in negative-sequence current (DI_2), the change in zero-sequence current (DI_0), and the change in positive-sequence current (DI_1). The disturbance detector element uses net local current, computed as a sum of all sources configured in the current differential element, to detect system disturbances. If the weak condition exists at one terminal, the voltage-based disturbance detector measures the changes in three-phase voltages (DVA, DVB, DVC).

The adaptive level detector operates as follows:

- When the absolute level increases above 0.12 pu for I_0 or I_2, the adaptive level detector output is active and the next highest threshold level is increased eight cycles later from 0.12 to 0.24 pu in steps of 0.02 pu. If the level exceeds 0.24 pu, the current adaptive level detector setting remains at 0.24 pu and the output remains active (as well as the disturbance detector output) when the measured value remains above the current setting.
- When the absolute level is decreasing from 0.24 to 0.12 pu, the lower level is set every eight cycles without the adaptive level detector active. Note that the 50DD output remains inactive during this change as long as the delta change is less than 0.04 pu.

The current delta level detectors (DI) detectors are designed to pick up for the 0.04 pu change in I_1, I_2, and I_0 currents. The DI value is measured by comparing the present value to the value calculated four cycles earlier.

The voltage delta level detectors (DV) are designed to pickup for the 0.1 pu change in any of three-phase voltages and the old voltage is greater than 0.8 pu. The DV value is measured by comparing the present value to the value calculated four cycles earlier.

The settings are explained as follows.

DD FUNCTION — This setting is used to enable/disable the operation of the disturbance detector.

DD NON-CURRENT SUPV — Selects a FlexLogic operand that activates the output of the disturbance detector upon events (such as frequency or voltage change) not accompanied by a current change.

DD CONTROL LOGIC — Used to prevent operation of I_0 and I_2 logic of disturbance detector during conditions such as single breaker pole being open that leads to unbalanced load current in single-pole tripping schemes. Breaker auxiliary contact can be used for such a scheme.

DD LOGIC SEAL-IN — Used to maintain disturbance detector output, 50DD SV, for such conditions as balanced three-phase fault and low level time overcurrent fault, whenever the disturbance detector might reset. 50DD SV is maintained until the chosen FlexLogic operand resets.

DD SEAL-IN BY 87LG — Used to seal-in the disturbance detector output, 50DD SV 87LG, especially for the 87LG element whenever the 50DD SV might reset before 87LG time delay elapses. 50DD SV 87LG is maintained until the 87L DIFF PKP G operand resets.

DD VOLTAGE SUPV — Used to enable the voltage-based disturbance detector for such applications as the weak condition exists at one terminal, where the weak-infeed current is not able to trigger the current-based disturbance detector. The voltage signals used for this detector are taken from the source assigned with the **CURRENT DIFF SIGNAL SOURCE 1** setting.

DD EVENTS — This setting can be disabled when the disturbance detector element responds to any current disturbance on the system that results in filling the events buffer and possible loss of valuable data.

Figure 5-182: Disturbance detector logic

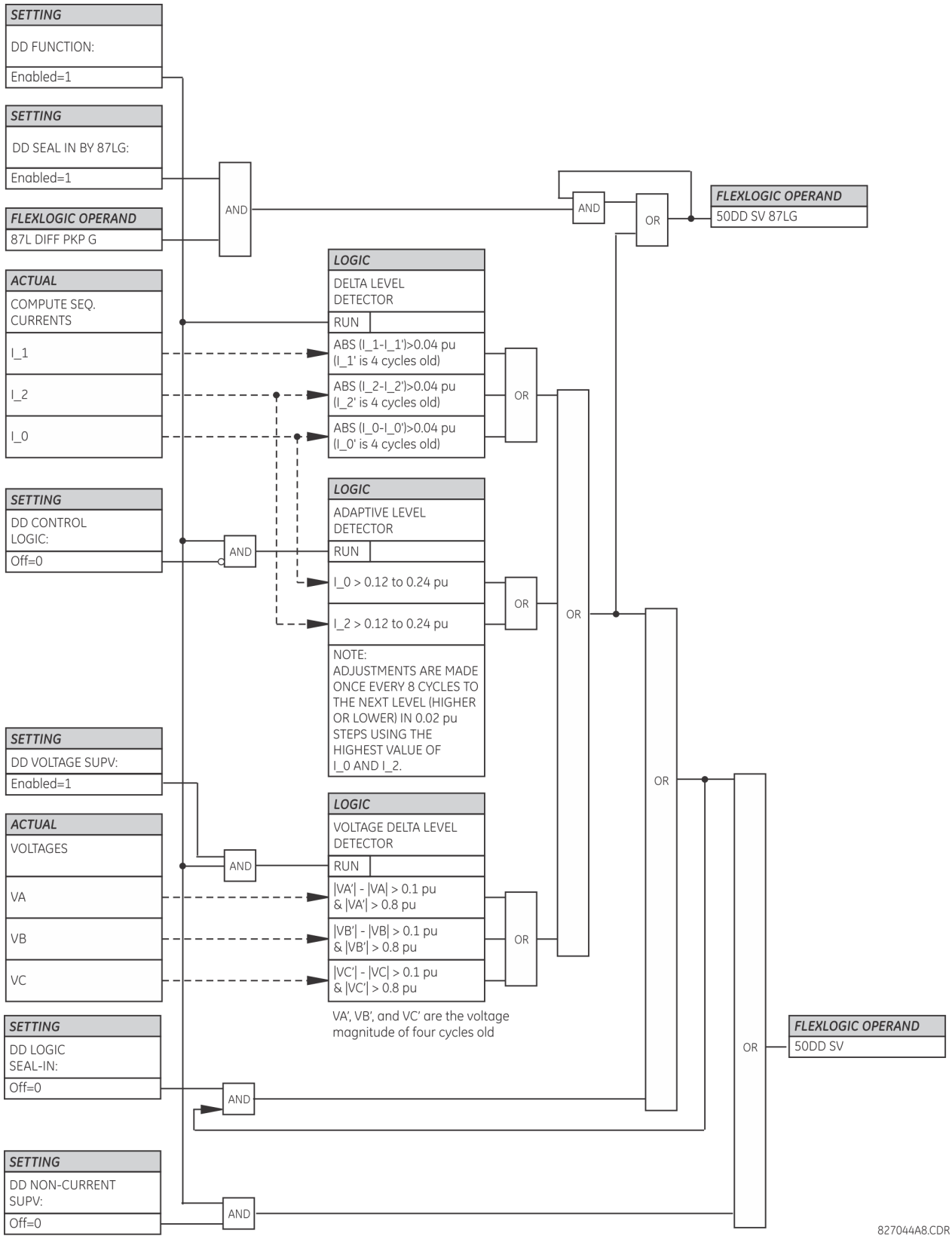

5.7.15.3 87L trip

SETTINGS ⇨⇩ GROUPED ELEMENTS ⇨ SETTING GROUP 1(6) ⇨⇩ SUPERVISING ELEMENTS ⇨⇩ 87L TRIP

■ 87L TRIP ■	⇔	87L TRIP FUNCTION: Disabled	Range: Disabled, Enabled
	⇩	87L TRIP SOURCE: SRC 1	Range: SRC 1, SRC 2, SRC 3, SRC 4
	⇩	87LP TRIP MODE: 3-Pole	Range: 3-Pole, 1-Pole
	⇩	87LG TRIP MODE: 3-Pole	Range: 3-Pole, 1-Pole
	⇩	87LP TRIP SUPV: Off	Range: FlexLogic operand
	⇩	87LG TRIP SUPV: Off	Range: FlexLogic operand
	⇩	87L TRIP FORCE 3Φ: Off	Range: FlexLogic operand
	⇩	87L TRIP SEAL-IN: Disabled	Range: Disabled, Enabled
	⇩	87L TRIP SEAL-IN PICKUP: 0.20 pu	Range: 0.20 to 0.80 pu in steps of 0.01
	⇩	87L TRIP TARGET: Self-reset	Range: Self-reset, Latched, Disabled
	⇧	87L TRIP EVENTS: Disabled	Range: Disabled, Enabled

The 87L trip element must be used to secure the generation of tripping outputs. It is especially recommended for use in all single-pole tripping applications. It provides the capability of maintaining the trip signal while the fault current is still flowing, to choose single-pole or three-pole tripping, to employ the received direct transfer trip (DTT) signals, and to assign supervising trip elements like the disturbance detector. The logic is used to ensure that the relay

- Trips the faulted phase for a single line to ground fault, as detected by the line differential element
- Trips all three phases for any internal multiphase fault
- Trips all three phases for a second single line to ground fault during or following a single pole trip cycle

For maximum security, it is recommended that the disturbance detector (plus other elements if required) be assigned to see a change in system status before a trip output is permitted. This ensures the relay does not issue a trip signal as a result of incorrect settings, incorrect manipulations with a relay, or inter-relay communications problems (for example, extremely noisy channels). The open pole detector provides forcing of three-pole tripping for sequential faults and close-onto-fault if wanted. The open pole detector feature must be employed and adequately programmed for proper operation of this feature. The 87L TRIP 1P OP and 87L TRIP 3P OP operands are provided to initiate single-pole or three-pole autoreclosing.

NOTE

If a direct transfer trip (DTT) is not required for the 87L trip scheme to operate, disable it at the remote relay via the **GROUPED ELEMENTS ⇨ SETTING GROUP 1(6) ⇨⇩ LINE DIFFERENTIAL ELEMENT ⇨⇩ CURRENT DIFFERENTIAL** settings menu.

87L TRIP FUNCTION — This setting is used to enable or disable the element.

87L TRIP SOURCE — Assigns a source for the seal-in function.

87L TRIP MODE — Selects either three-pole or single-pole mode of operation.

87L TRIP SUPV — Assigns a trip supervising element. The 50DD SV FlexLogic operand is recommended (the element has to be enabled); otherwise, elements like instantaneous overcurrent, distance, and so can be used.

87L TRIP FORCE 3-Φ — Selects an element forcing three-pole tripping if any type fault occurs when this element is active. Autoreclosure disabled can be utilized, or the autoreclosure counter if, for example, the second trip is required to be a three-pole signal. Likewise, any operand representing a change in the power system configuration can be applied.

87L TRIP SEAL-IN — Enables/disables seal-in of the trip signal by measurement of the current flowing. If the single-pole trip mode is selected and the Trip Out element is applied, set this setting to "Disabled."

87L TRIP SEAL-IN PICKUP — Selects a pickup setting of the current seal-in function.

Figure 5-183: 87L trip logic

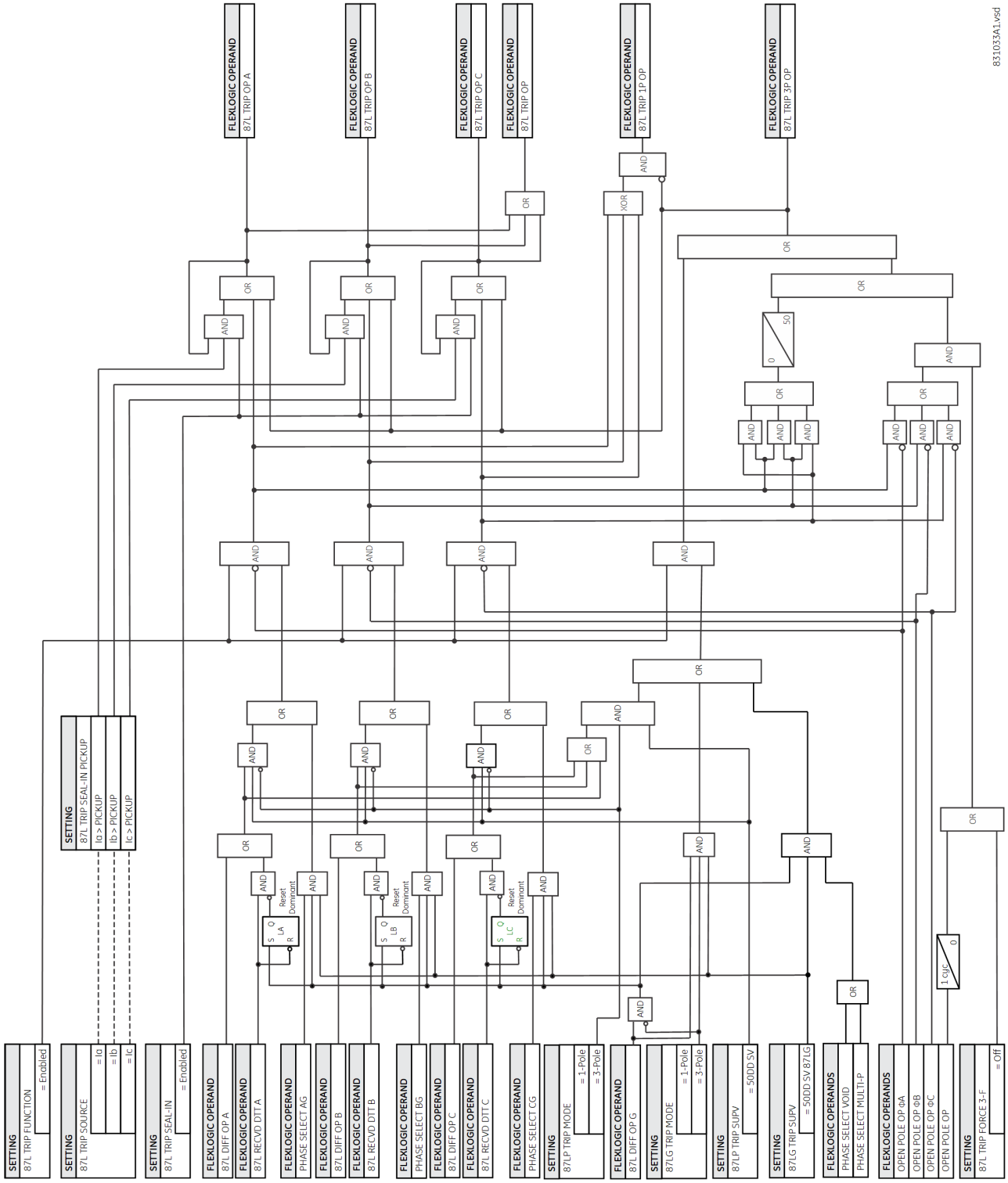

5.7.16 Sensitive directional power

SETTINGS ⇨⇩ GROUPED ELEMENTS ⇨ SETTING GROUP 1(6) ⇨⇩ POWER ⇨ SENSITIVE DIRECTIONAL POWER ⇨ DIRECTIONAL POWER 1(2)

■ DIRECTIONAL ■ POWER 1	⇔	**DIR POWER 1 FUNCTION: Disabled**	Range: Disabled, Enabled
	⇩	**DIR POWER 1 SOURCE: SRC 1**	Range: SRC 1, SRC 2, SRC 3, SRC 4
	⇩	**DIR POWER 1 RCA: 0°**	Range: 0 to 359° in steps of 1
	⇩	**DIR POWER 1 CALIBRATION: 0.00°**	Range: 0 to 0.95° in steps of 0.05
	⇩	**DIR POWER 1 STG1 SMIN: 0.100 pu**	Range: –1.200 to 1.200 pu in steps of 0.001
	⇩	**DIR POWER 1 STG1 DELAY: 0.50 s**	Range: 0.00 to 600.00 s in steps of 0.01
	⇩	**DIR POWER 1 STG2 SMIN: 0.100 pu**	Range: –1.200 to 1.200 pu in steps of 0.001
	⇩	**DIR POWER 1 STG2 DELAY: 20.00 s**	Range: 0.00 to 600.00 s in steps of 0.01
	⇩	**DIR POWER 1 BLK: Off**	Range: FlexLogic operand
	⇩	**DIR POWER 1 TARGET: Self-reset**	Range: Self-reset, Latched, Disabled
	⇧	**DIR POWER 1 EVENTS: Disabled**	Range: Disabled, Enabled

The sensitive directional power element responds to three-phase directional power and is designed for reverse power and low forward power applications for synchronous machines or interconnections involving co-generation. The relay measures the three-phase power from either a full set of wye-connected VTs or a full set of delta-connected VTs. In the latter case, the two-wattmeter method is used. See the UR-series Metering Conventions section in chapter 6 for details regarding the active and reactive powers used by the sensitive directional power element.

The element has an adjustable characteristic angle and minimum operating power as shown in the Directional Power Characteristic diagram that follows. The element responds to the following condition:

$$P \cos \theta + Q \sin \theta > SMIN \qquad \textbf{Eq. 5-42}$$

where

P and Q are active and reactive powers as measured per the UR metering convention
θ is a sum of the element characteristic (**DIR POWER 1 RCA**) and calibration (**DIR POWER 1 CALIBRATION**) angles
SMIN is the minimum operating power

The operating quantity is displayed in the **ACTUAL VALUES ⇨ METERING ⇨⇩ SENSITIVE DIRECTIONAL POWER 1(2)** actual value. The element has two independent (as to the pickup and delay settings) stages for alarm and trip, respectively.

Figure 5-184: Directional power characteristic

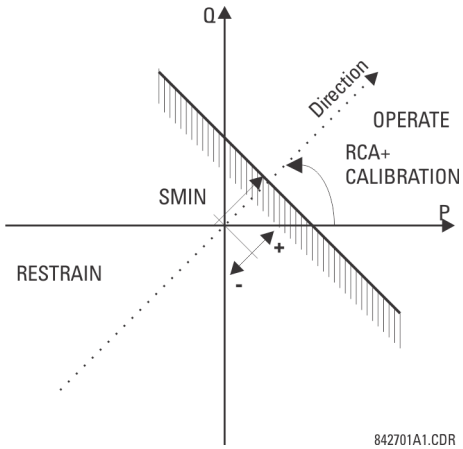

By making the characteristic angle adjustable and providing for both negative and positive values of the minimum operating power, a variety of operating characteristics can be achieved as presented in the following figure. For example, section (a) in the figure shows settings for reverse power, while section (b) shows settings for low forward power applications.

Figure 5-185: Directional power element sample applications

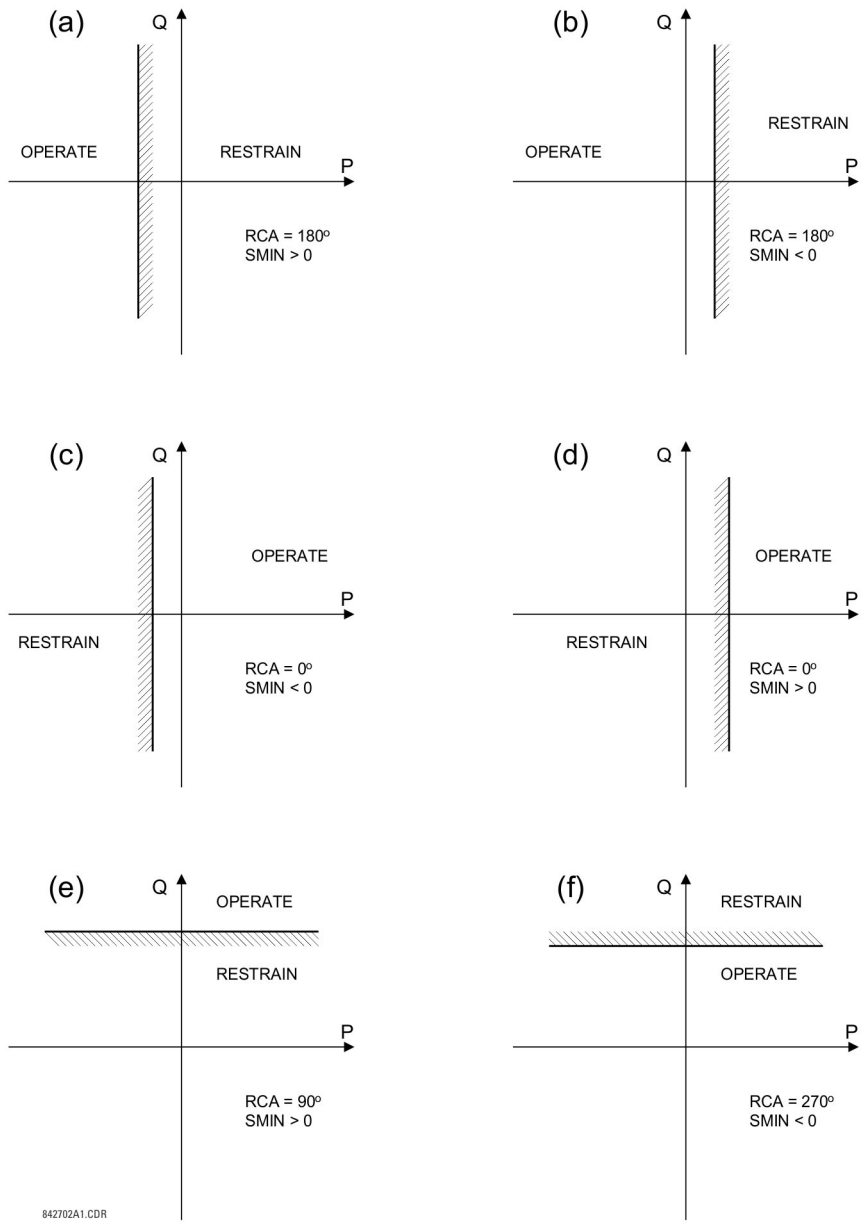

DIR POWER 1 RCA — Specifies the relay characteristic angle (RCA) for the sensitive directional power function. Application of this setting is threefold:

- It allows the element to respond to active or reactive power in any direction (active overpower/underpower, and so on)
- Together with a precise calibration angle, it allows compensation for any CT and VT angular errors to permit more sensitive settings
- It allows for required direction in situations when the voltage signal is taken from behind a delta-wye connected power transformer and the phase angle compensation is required

For example, the active overpower characteristic is achieved by setting **DIR POWER 1 RCA** to "0°," reactive overpower by setting **DIR POWER 1 RCA** to "90°," active underpower by setting **DIR POWER 1 RCA** to "180°," and reactive underpower by setting **DIR POWER 1 RCA** to "270°."

DIR POWER 1 CALIBRATION — This setting allows the relay characteristic angle to change in steps of 0.05°. This is useful when a small difference in VT and CT angular errors is to be compensated to permit more sensitive settings. This setting virtually enables calibration of the directional power function in terms of the angular error of applied VTs and CTs. The element responds to the sum of the **DIR POWER 1 RCA** and **DIR POWER 1 CALIBRATION** settings.

DIR POWER 1 STG1 SMIN — This setting specifies the minimum power as defined along the relay characteristic angle (RCA) for the stage 1 of the element. The positive values imply a shift towards the operate region along the RCA line; the negative values imply a shift towards the restrain region along the RCA line. See the Directional Power Sample Applications figure for details. Together with the RCA, this setting enables a wide range of operating characteristics. This setting applies to three-phase power and is entered in per-unit (pu) values. The base quantity is 3 × VT pu base × CT pu base.

For example, a setting of 2% for a 200 MW machine is 0.02 × 200 MW = 4 MW. If 13.8kV is line voltage and 10 kA is a primary CT current, the source pu quantity is 239 MVA, and thus, SMIN needs to be set at 4 MW / 239 MVA = 0.0167 pu ≈ 0.017 pu. If the reverse power application is considered, RCA = 180° and SMIN = 0.017 pu.

The element drops out if the magnitude of the positive-sequence current becomes virtually zero, that is, it drops below the cutoff level.

DIR POWER 1 STG1 DELAY — This setting specifies a time delay for stage 1. For reverse power or low forward power applications for a synchronous machine, stage 1 is typically applied for alarming and stage 2 for tripping.

Figure 5-186: Sensitive directional power logic

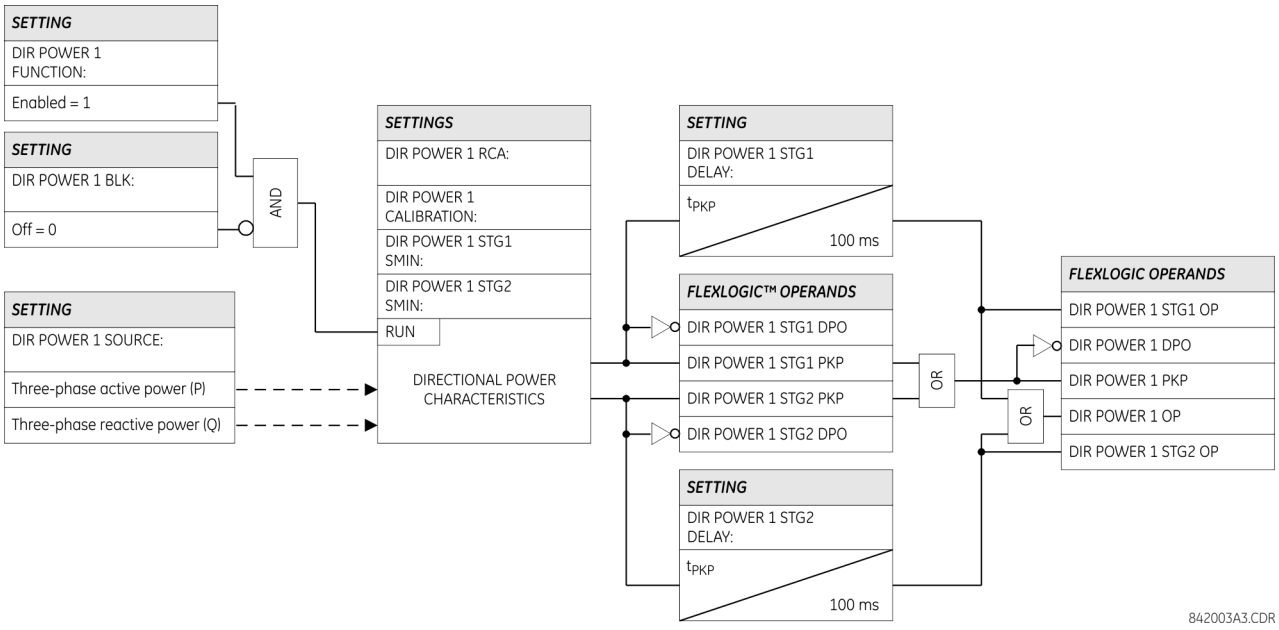

5.8 Control elements

5.8.1 Overview

Control elements are used for control rather than protection. See the Introduction to Elements section at the beginning of this chapter for information.

5.8.2 Trip bus

SETTINGS ⇨⇩ CONTROL ELEMENTS ⇨ TRIP BUS ⇨ TRIP BUS 1(6)

■ **TRIP BUS 1** ■	⇔	**TRIP BUS 1** **FUNCTION: Disabled**	Range: Enabled, Disabled

⇕	**TRIP BUS 1 BLOCK: Off**	Range: FlexLogic operand
⇕	**TRIP BUS 1 PICKUP DELAY: 0.00 s**	Range: 0.00 to 600.00 s in steps of 0.01
⇕	**TRIP BUS 1 RESET DELAY: 0.00 s**	Range: 0.00 to 600.00 s in steps of 0.01
⇕	**TRIP BUS 1 INPUT 1 Off**	Range: FlexLogic operand
	⇩	
⇕	**TRIP BUS 1 INPUT 16 Off**	Range: FlexLogic operand
⇕	**TRIP BUS 1 LATCHING: Disabled**	Range: Enabled, Disabled
⇕	**TRIP BUS 1 RESET: Off**	Range: FlexLogic operand
⇕	**TRIP BUS 1: TARGET: Self-reset**	Range: Self-reset, Latched, Disabled
⇧	**TRIP BUS 1 EVENTS: Disabled**	Range: Enabled, Disabled

The trip bus element allows aggregating outputs of protection and control elements without using FlexLogic and assigning them a simple and effective manner. Each trip bus can be assigned for either trip or alarm actions. Simple trip conditioning such as latch, delay, and seal-in delay are available.

The easiest way to assign element outputs to a trip bus is through the EnerVista software under **Settings > Protection Summary**. Navigate to a specific protection or control protection element and check the bus box by hovering over the blank check box and selecting an option that displays. Once the required element is selected for a specific bus, a list of element operate-type operands are displayed and can be assigned to a trip bus. If more than one operate-type operand is required, it can be assigned directly from the trip bus menu.

Figure 5-187: Trip bus fields in the protection summary

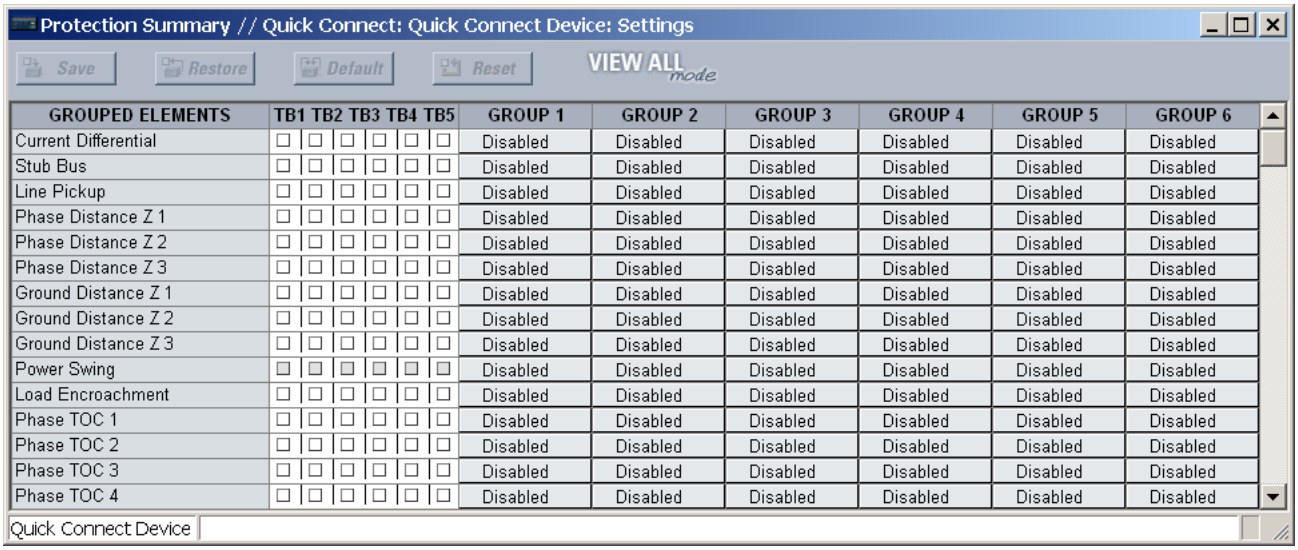

GROUPED ELEMENTS	TB1	TB2	TB3	TB4	TB5	GROUP 1	GROUP 2	GROUP 3	GROUP 4	GROUP 5	GROUP 6
Current Differential	☐	☐	☐	☐	☐	Disabled	Disabled	Disabled	Disabled	Disabled	Disabled
Stub Bus	☐	☐	☐	☐	☐	Disabled	Disabled	Disabled	Disabled	Disabled	Disabled
Line Pickup	☐	☐	☐	☐	☐	Disabled	Disabled	Disabled	Disabled	Disabled	Disabled
Phase Distance Z 1	☐	☐	☐	☐	☐	Disabled	Disabled	Disabled	Disabled	Disabled	Disabled
Phase Distance Z 2	☐	☐	☐	☐	☐	Disabled	Disabled	Disabled	Disabled	Disabled	Disabled
Phase Distance Z 3	☐	☐	☐	☐	☐	Disabled	Disabled	Disabled	Disabled	Disabled	Disabled
Ground Distance Z 1	☐	☐	☐	☐	☐	Disabled	Disabled	Disabled	Disabled	Disabled	Disabled
Ground Distance Z 2	☐	☐	☐	☐	☐	Disabled	Disabled	Disabled	Disabled	Disabled	Disabled
Ground Distance Z 3	☐	☐	☐	☐	☐	Disabled	Disabled	Disabled	Disabled	Disabled	Disabled
Power Swing	☐	☐	☐	☐	☐	Disabled	Disabled	Disabled	Disabled	Disabled	Disabled
Load Encroachment	☐	☐	☐	☐	☐	Disabled	Disabled	Disabled	Disabled	Disabled	Disabled
Phase TOC 1	☐	☐	☐	☐	☐	Disabled	Disabled	Disabled	Disabled	Disabled	Disabled
Phase TOC 2	☐	☐	☐	☐	☐	Disabled	Disabled	Disabled	Disabled	Disabled	Disabled
Phase TOC 3	☐	☐	☐	☐	☐	Disabled	Disabled	Disabled	Disabled	Disabled	Disabled
Phase TOC 4	☐	☐	☐	☐	☐	Disabled	Disabled	Disabled	Disabled	Disabled	Disabled

The following settings are available.

TRIP BUS 1 BLOCK — The trip bus output is blocked when the operand assigned to this setting is asserted.

TRIP BUS 1 PICKUP DELAY — This setting specifies a time delay to produce an output depending on how output is used.

TRIP BUS 1 RESET DELAY — This setting specifies a time delay to reset an output command. Set the time delay long enough to allow the breaker or contactor to perform a required action.

TRIP BUS 1 INPUT 1 to **TRIP BUS 1 INPUT 16** — These settings select a FlexLogic operand to be assigned as an input to the trip bus.

TRIP BUS 1 LATCHING — This setting enables or disables latching of the trip bus output. This is typically used when lockout is required or user acknowledgement of the relay response is required.

TRIP BUS 1 RESET — The trip bus output is reset when the operand assigned to this setting is asserted. Note that the RESET OP operand is pre-wired to the reset gate of the latch, As such, a reset command from the front panel interface or via communications resets the trip bus output.

Figure 5-188: Trip bus logic

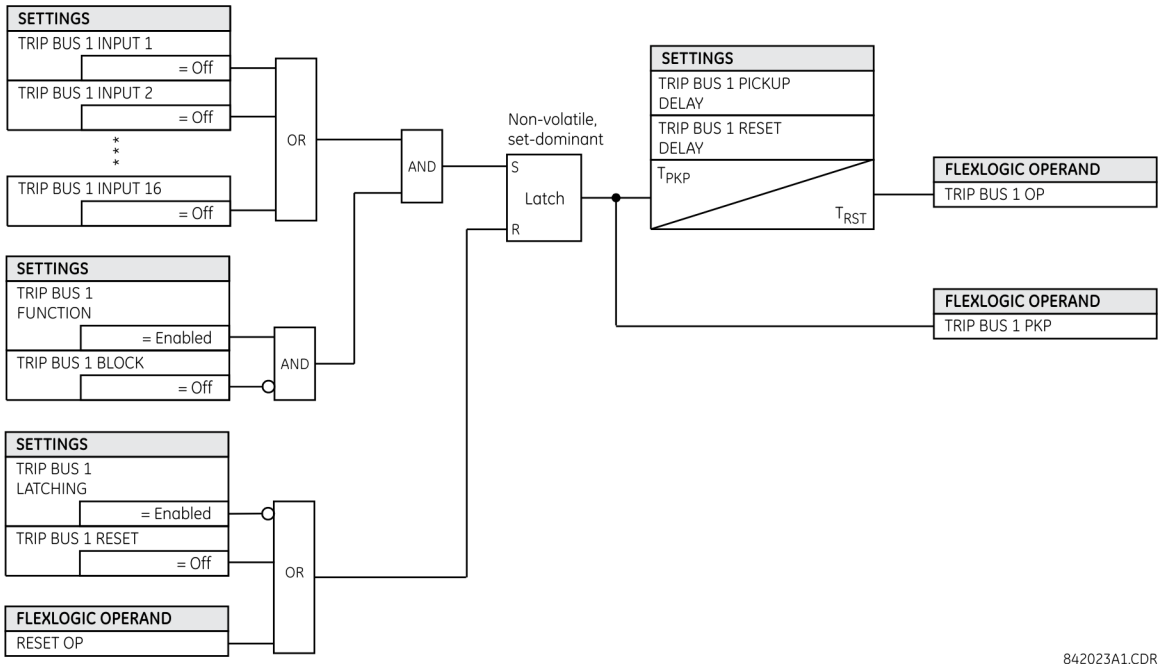

5.8.3 Setting groups

SETTINGS ⇨⇩ CONTROL ELEMENTS ⇨ SETTING GROUPS

■ **SETTING GROUPS** ■	⇔	**SETTING GROUPS FUNCTION: Enabled**	Range: Disabled, Enabled
	⇕	**SETTING GROUPS BLK: Off**	Range: FlexLogic operand
	⇕	**GROUP 2 ACTIVATE ON: Off**	Range: FlexLogic operand
		⇩	
	⇕	**GROUP 6 ACTIVATE ON: Off**	Range: FlexLogic operand
	⇕	**GROUP 1 NAME:**	Range: up to 16 alphanumeric characters
		⇩	
	⇕	**GROUP 6 NAME:**	Range: up to 16 alphanumeric characters

⇧ **SETTING GROUP EVENTS: Disabled** Range: Disabled, Enabled

The setting groups menu controls the activation and deactivation of up to six possible groups of settings in the **GROUPED ELEMENTS** settings menu. The active setting group can be indicated on the front display of the UR by configuring User-Programmable LEDs to display the state of the SETTING GROUP ACT FlexLogic operands.

On a setting group change, protection elements are blocked temporarily to allow the relay to re-initialize with the new settings. The duration of the block depends on relay configuration and can last up to four cycles. The actual block duration on the group switching can be verified by the PROTSUPV operand.

SETTING GROUPS FUNCTION — When Enabled, allows setting groups other than group 1 (the default active group) to be activated. The default setting group is forced active while the **SETTING GROUPS FUNCTION** setting is Disabled.

SETTING GROUPS BLK — Prevents the active setting group from changing when the selected FlexLogic operand is "On." This can be useful in applications where it is undesirable to change the settings under certain conditions, such as during a control sequence.

GROUP 2 ACTIVATE ON to **GROUP 6 ACTIVATE ON** — Selects a FlexLogic operand which, when set, makes the particular setting group active for use by any grouped element. A priority scheme ensures that only one group is active at a given time — the highest-numbered group that is activated by its **ACTIVATE ON** parameter takes priority over the lower-numbered groups. There is no activate on setting for group 1 (the default active group), because group 1 automatically becomes active if no other group is active.

SETTING GROUP 1 NAME to **SETTING GROUP 6 NAME** — Allows the user to assign a name to each of the six settings groups. Once programmed, this name appears on the second line of the **GROUPED ELEMENTS ⇨ SETTING GROUP 1(6)** menu display.

The relay can be set up via a FlexLogic equation to receive requests to activate or de-activate a particular non-default settings group. The following FlexLogic equation (see the following figure) illustrates requests via remote communications (for example, VIRTUAL INPUT 1 ON) or from a local contact input (for example, CONTACT IP 1 ON) to initiate the use of a particular settings group, and requests from several overcurrent pickup measuring elements to inhibit the use of the particular settings group. The assigned VIRTUAL OUTPUT 1 operand is used to control the "On" state of a particular settings group.

Figure 5-189: Example of FlexLogic control of a setting group

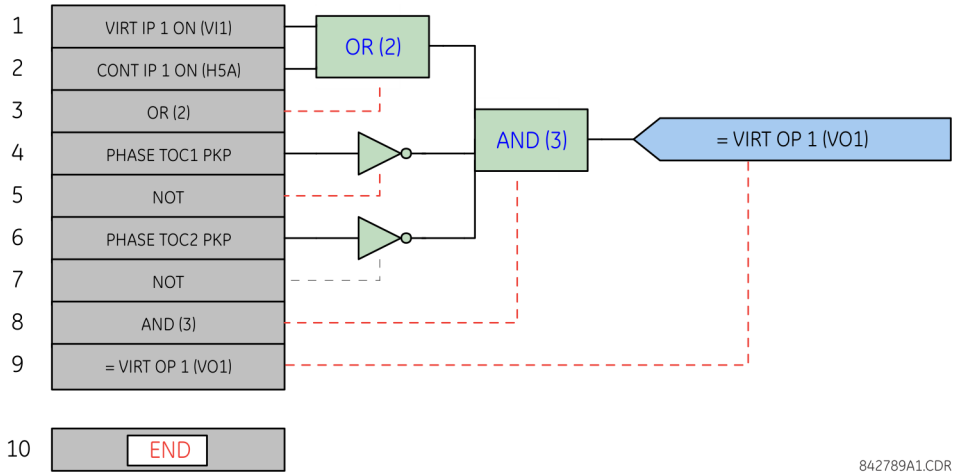

A setting group selection can also be made by the IEC 61850 MMS service SelectActiveSG to the control block @Master/LLN0.SGCB. The priority scheme mentioned makes active the highest numbered group selected by SelectActiveSG or the **GROUP ACTIVATE ON** settings. The SelectActiveSG selection has a default value of 1, so until a higher SelectActiveSG selection is received, the **GROUP ACTIVATE ON** settings control the active group.

The most recent SelectActiveSG selection is preserved while the UR is powered down or reset.

If it becomes necessary to cancel the SelectActiveSG selection without using a SelectActiveSG service request, change the **SETTING GROUPS FUNCTION** setting to Disabled. This resets the SelectActiveSG selection to 1.

5.8.4 Selector switch

SETTINGS ⇨⇩ CONTROL ELEMENTS ⇨ SELECTOR SWITCH ⇨ SELECTOR SWITCH 1(2)

■ SELECTOR SWITCH 1 ■	⇔	SELECTOR 1 FUNCTION: Disabled	Range: Disabled, Enabled
	⇩	SELECTOR 1 FULL RANGE: 7	Range: 1 to 7 in steps of 1
	⇩	SELECTOR 1 TIME-OUT: 5.0 s	Range: 3.0 to 60.0 s in steps of 0.1
	⇩	SELECTOR 1 STEP-UP: Off	Range: FlexLogic operand
	⇩	SELECTOR 1 STEP-UP MODE: Time-out	Range: Time-out, Acknowledge
	⇩	SELECTOR 1 ACK: Off	Range: FlexLogic operand
	⇩	SELECTOR 1 3BIT A0: Off	Range: FlexLogic operand
	⇩	SELECTOR 1 3BIT A1: Off	Range: FlexLogic operand
	⇩	SELECTOR 1 3BIT A2: Off	Range: FlexLogic operand
	⇩	SELECTOR 1 3BIT MODE: Time-out	Range: Time-out, Acknowledge
	⇩	SELECTOR 1 3BIT ACK: Off	Range: FlexLogic operand
	⇩	SELECTOR 1 POWER-UP MODE: Restore	Range: Restore, Synchronize, Sync/Restore
	⇩	SELECTOR 1 TARGETS: Self-reset	Range: Self-reset, Latched, Disabled
	⇧	SELECTOR 1 EVENTS: Disabled	Range: Disabled, Enabled

The selector switch element is intended to replace a mechanical selector switch. Typical applications include setting group control or control of multiple logic sub-circuits in user-programmable logic.

The element provides for two control inputs. The step-up control allows stepping through selector position one step at a time with each pulse of the control input, such as a user-programmable pushbutton. The three-bit control input allows setting the selector to the position defined by a three-bit word.

The element allows pre-selecting a new position without applying it. The pre-selected position gets applied either after time-out or upon acknowledgement via separate inputs (user setting). The selector position is stored in non-volatile memory. Upon power-up, either the previous position is restored or the relay synchronizes to the current three-bit word (user setting). Basic alarm functionality alerts the user under abnormal conditions; for example, the three-bit control input being out of range.

A selector switch runs every two power cycles.

SELECTOR 1 FULL RANGE — This setting defines the upper position of the selector. When stepping up through available positions of the selector, the upper position wraps up to the lower position (position 1). When using a direct three-bit control word for programming the selector to a desired position, the change would take place only if the control word is within the range of 1 to the **SELECTOR FULL RANGE**. If the control word is outside the range, an alarm is established by setting the SELECTOR ALARM FlexLogic operand for three seconds.

SELECTOR 1 TIME-OUT — This setting defines the time-out period for the selector. This value is used by the relay in the following two ways. When the **SELECTOR STEP-UP MODE** is "Time-out," the setting specifies the required period of inactivity of the control input after which the pre-selected position is automatically applied. When the **SELECTOR STEP-UP MODE** is "Acknowledge," the setting specifies the period of time for the acknowledging input to appear. The timer is re-started by any activity of the control input. The acknowledging input must come before the **SELECTOR 1 TIME-OUT** timer expires; otherwise, the change does not take place and an alarm is set.

SELECTOR 1 STEP-UP — This setting specifies a control input for the selector switch. The switch is shifted to a new position at each rising edge of this signal. The position changes incrementally, wrapping up from the last (**SELECTOR 1 FULL RANGE**) to the first (position 1). Consecutive pulses of this control operand must not occur faster than every 50 ms. After each rising edge of the assigned operand, the time-out timer is restarted and the SELECTOR SWITCH 1: POS Z CHNG INITIATED target message is displayed, where Z the pre-selected position. The message is displayed for the time specified by the **FLASH MESSAGE TIME** setting. The pre-selected position is applied after the selector times out ("Time-out" mode), or when the acknowledging signal appears before the element times out ("Acknowledge" mode). When the new position is applied, the relay displays the SELECTOR SWITCH 1: POSITION Z IN USE message. Typically, a user-programmable pushbutton is configured as the stepping up control input.

SELECTOR 1 STEP-UP MODE — This setting defines the selector mode of operation. When set to "Time-out," the selector changes its position after a pre-defined period of inactivity at the control input. The change is automatic and does not require any explicit confirmation of the intent to change the selector's position. When set to "Acknowledge," the selector changes its position only after the intent is confirmed through a separate acknowledging signal. If the acknowledging signal does not appear within a pre-defined period of time, the selector does not accept the change and an alarm is established by setting the SELECTOR STP ALARM output FlexLogic operand for three seconds.

SELECTOR 1 ACK — This setting specifies an acknowledging input for the stepping up control input. The pre-selected position is applied on the rising edge of the assigned operand. This setting is active only under "Acknowledge" mode of operation. The acknowledging signal must appear within the time defined by the **SELECTOR 1 TIME-OUT** setting after the last activity of the control input. A user-programmable pushbutton is typically configured as the acknowledging input.

SELECTOR 1 3BIT A0, **A1**, and **A2** — These settings specify a three-bit control input of the selector. The three-bit control word pre-selects the position using the following encoding convention:

A2	A1	A0	Position
0	0	0	rest
0	0	1	1
0	1	0	2
0	1	1	3
1	0	0	4
1	0	1	5
1	1	0	6
1	1	1	7

The "rest" position (0, 0, 0) does not generate an action and is intended for situations when the device generating the three-bit control word is having a problem. When **SELECTOR 1 3BIT MODE** is "Time-out," the pre-selected position is applied in **SELECTOR 1 TIME-OUT** seconds after the last activity of the three-bit input. When **SELECTOR 1 3BIT MODE** is "Acknowledge," the pre-selected position is applied on the rising edge of the **SELECTOR 1 3BIT ACK** acknowledging input.

The stepping up control input (**SELECTOR 1 STEP-UP**) and the three-bit control inputs (**SELECTOR 1 3BIT A0** through **A2**) lock-out mutually: once the stepping up sequence is initiated, the three-bit control input is inactive; once the three-bit control sequence is initiated, the stepping up input is inactive.

SELECTOR 1 3BIT MODE — This setting defines the selector mode of operation. When set to "Time-out," the selector changes its position after a pre-defined period of inactivity at the control input. The change is automatic and does not require explicit confirmation to change the selector position. When set to "Acknowledge," the selector changes its position only after confirmation via a separate acknowledging signal. If the acknowledging signal does not appear within a pre-defined period of time, the selector rejects the change and an alarm established by invoking the SELECTOR BIT ALARM FlexLogic operand for three seconds.

SELECTOR 1 3BIT ACK — This setting specifies an acknowledging input for the three-bit control input. The pre-selected position is applied on the rising edge of the assigned FlexLogic operand. This setting is active only under the "Acknowledge" mode of operation. The acknowledging signal must appear within the time defined by the **SELECTOR TIME-OUT** setting after the last activity of the three-bit control inputs. Note that the stepping up control input and three-bit control input have independent acknowledging signals (**SELECTOR 1 ACK** and **SELECTOR 1 3BIT ACK**, accordingly).

SELECTOR 1 POWER-UP MODE — This setting specifies the element behavior on power up of the relay.

When set to "Restore," the last position of the selector (stored in the non-volatile memory) is restored after powering up the relay. If the position restored from memory is out of range, position 0 (no output operand selected) is applied and an alarm is set (**SELECTOR 1 PWR ALARM**).

When set to "Synchronize," the selector switch acts as follows. For two power cycles, the selector applies position 0 to the switch and activates **SELECTOR 1 PWR ALARM**. After two power cycles expire, the selector synchronizes to the position dictated by the three-bit control input. This operation does not wait for time-out or the acknowledging input. When the synchronization attempt is unsuccessful (that is, the three-bit input is not available (0,0,0) or out of range), then the selector switch output is set to position 0 (no output operand selected) and an alarm is established (**SELECTOR 1 PWR ALARM**).

The operation of "Synch/Restore" mode is similar to the "Synchronize" mode. The only difference is that after an unsuccessful synchronization attempt, the switch attempts to restore the position stored in the relay memory. The "Synch/Restore" mode is useful for applications where the selector switch is employed to change the setting group in redundant (two relay) protection schemes.

SELECTOR 1 EVENTS — If enabled, the following events are logged:

Event name	Description
SELECTOR 1 POS Z	Selector 1 changed its position to Z
SELECTOR 1 STP ALARM	The selector position pre-selected via the stepping up control input has not been confirmed before the time out
SELECTOR 1 BIT ALARM	The selector position pre-selected via the three-bit control input has not been confirmed before the time out

The following figures illustrate the operation of the selector switch. In these diagrams, "T" represents a time-out setting.

Figure 5-190: Time-out mode

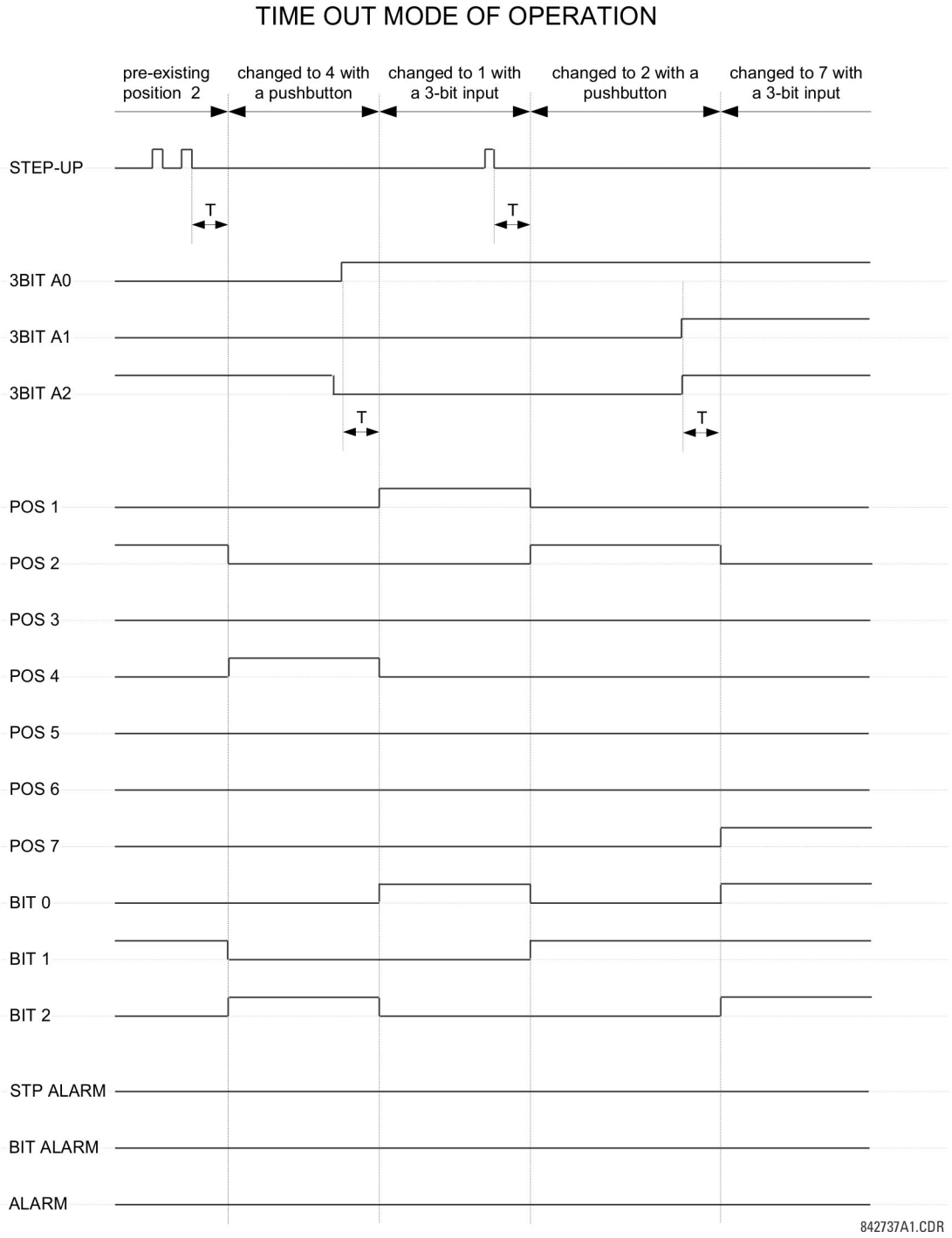

Figure 5-191: Acknowledge mode

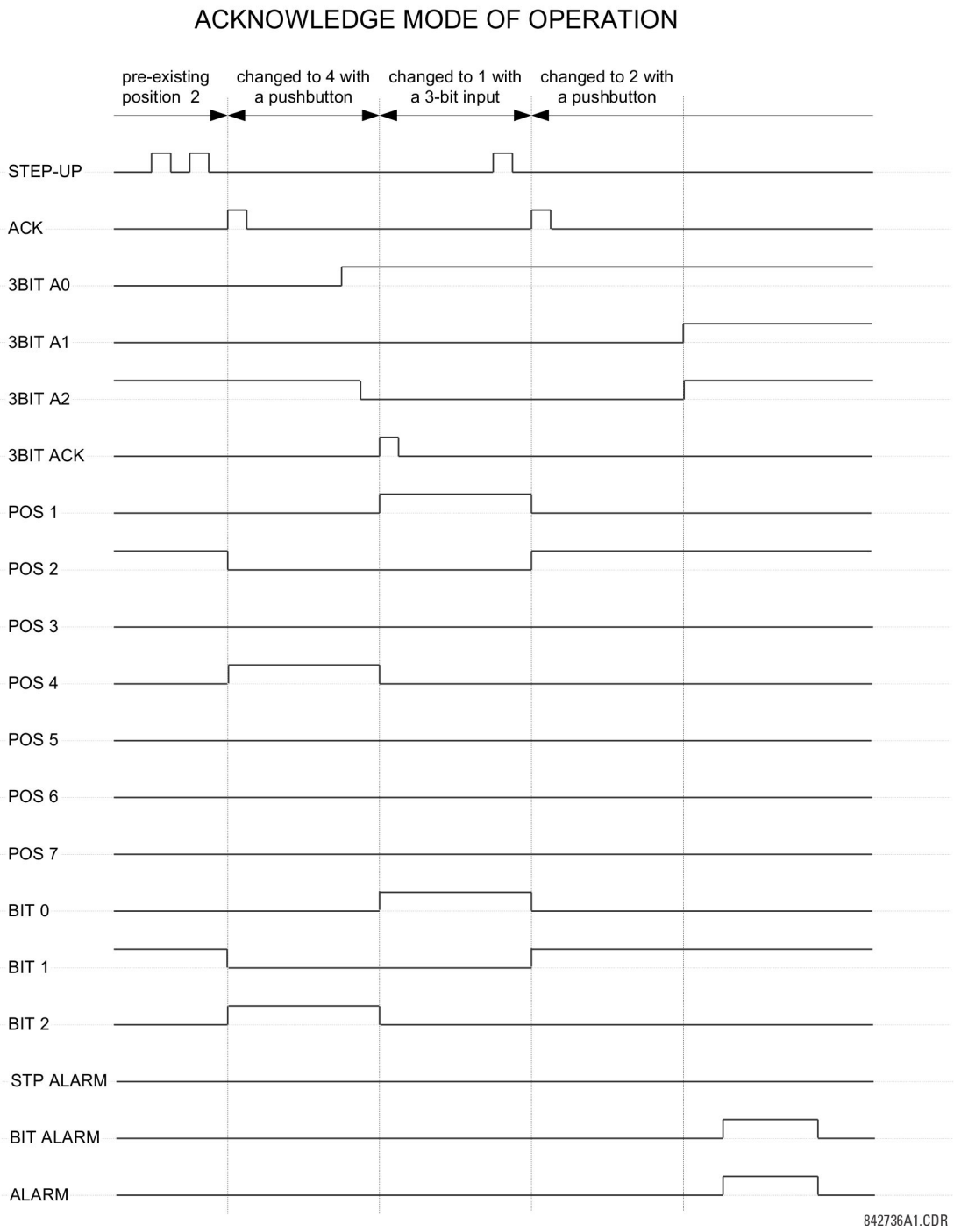

Application example

Consider an application where the selector switch is used to control setting groups 1 through 4 in the relay. The setting groups are to be controlled from both user-programmable pushbutton 1 and from an external device via contact inputs 1 through 3. The active setting group is to be available as an encoded three-bit word to the external device and SCADA via output contacts 1 through 3. The pre-selected setting group is to be applied automatically after five seconds of inactivity of the control inputs. When the relay powers up, it is to synchronize the setting group to the three-bit control input.

Make the following changes to setting group control in the **SETTINGS ⇨⇩ CONTROL ELEMENTS ⇨ SETTING GROUPS** menu:

SETTING GROUPS FUNCTION: "Enabled"
SETTING GROUPS BLK: "Off"
GROUP 2 ACTIVATE ON: "SELECTOR 1 POS 2"
GROUP 3 ACTIVATE ON: "SELECTOR 1 POS 3"
GROUP 4 ACTIVATE ON: "SELECTOR 1 POS 4"
GROUP 5 ACTIVATE ON: "Off"
GROUP 6 ACTIVATE ON: "Off"

Make the following changes to selector switch element in the **SETTINGS ⇨⇩ CONTROL ELEMENTS ⇨⇩ SELECTOR SWITCH ⇨ SELECTOR SWITCH 1** menu to assign control to user programmable pushbutton 1 and contact inputs 1 through 3:

SELECTOR 1 FUNCTION: "Enabled"
SELECTOR 1 FULL-RANGE: "4"
SELECTOR 1 STEP-UP MODE: "Time-out"
SELECTOR 1 TIME-OUT: "5.0 s"
SELECTOR 1 STEP-UP: "PUSHBUTTON 1 ON"
SELECTOR 1 ACK: "Off"
SELECTOR 1 3BIT A0: "CONT IP 1 ON"
SELECTOR 1 3BIT A1: "CONT IP 2 ON"
SELECTOR 1 3BIT A2: "CONT IP 3 ON"
SELECTOR 1 3BIT MODE: "Time-out"
SELECTOR 1 3BIT ACK: "Off"
SELECTOR 1 POWER-UP MODE: "Synchronize"

Now, assign the contact output operation (assume the H6E module) to the selector switch element by making the following changes in the **SETTINGS ⇨⇩ INPUTS/OUTPUTS ⇨⇩ CONTACT OUTPUTS** menu:

OUTPUT H1 OPERATE: "SELECTOR 1 BIT 0"
OUTPUT H2 OPERATE: "SELECTOR 1 BIT 1"
OUTPUT H3 OPERATE: "SELECTOR 1 BIT 2"

Finally, assign configure user-programmable pushbutton 1 by making the following changes in the **SETTINGS ⇨ PRODUCT SETUP ⇨⇩ USER-PROGRAMMABLE PUSHBUTTONS ⇨ USER PUSHBUTTON 1** menu:

PUSHBUTTON 1 FUNCTION: "Self-reset"
PUSHBUTTON 1 DROP-OUT TIME: "0.10 s"

The figure shows the logic for the selector switch.

Figure 5-192: Selector switch logic

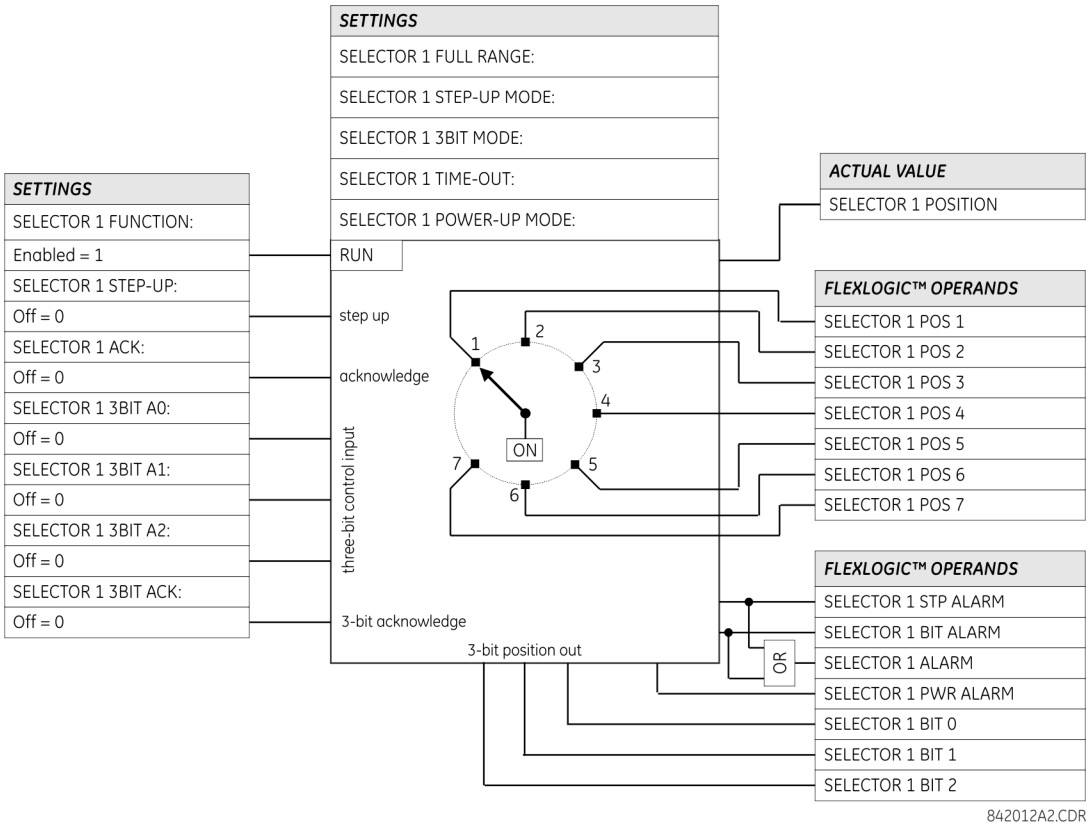

5.8.5 Trip output

SETTINGS ⇨⇩ CONTROL ELEMENTS ⇨⇩ TRIP OUTPUT

■ **TRIP OUTPUT** ■	⇔	**TRIP MODE: Disabled**	Range: Disabled, 3 Pole Only, 3 Pole & 1 Pole
	⇕	**TRIP 3-POLE INPUT1: Off**	Range: FlexLogic operand
	⇩		
	⇕	**TRIP 3-POLE INPUT6: Off**	Range: FlexLogic operand
	⇕	**TRIP 1-POLE INPUT1: Off**	Range: FlexLogic operand
	⇩		
	⇕	**TRIP 1-POLE INPUT6: Off**	Range: FlexLogic operand
	⇕	**TRIP RECLOSE INPUT1: Off**	Range: FlexLogic operand
	⇩		
	⇕	**TRIP RECLOSE INPUT6: Off**	Range: FlexLogic operand
	⇕	**TRIP SEAL-IN DELAY: 0.000 s**	Range: 0 to 65.535 s in steps of 0.001

⇕	**TRIP RESET: Pole Curr OR Custom**	Range: Pole Curr OR Custom, CBaux OR Custom, Custom
⇕	**START TMR Z2PH Inp1: Off**	Range: FlexLogic operand
⇕	**START TMR Z2PH Inp2: Off**	Range: FlexLogic operand
⇕	**START TMR Z2GR Inp1: Off**	Range: FlexLogic operand
⇕	**START TMR Z2GR Inp2: Off**	Range: FlexLogic operand
⇕	**PH SELECTOR RESET DELAY: 0.500 s**	Range: 0.500 to 3.000 s in steps of 0.001 s
⇕	**PH SELECTOR RESET: Off**	Range: FlexLogic operand
⇕	**TRIP FORCE 3-POLE: Off**	Range: FlexLogic operand
⇕	**TRIP PILOT PRIORITY: 0.000 s**	Range: 0 to 65.535 s in steps of 0.001
⇕	**REVERSE FAULT: Off**	Range: FlexLogic operand
⇕	**TRIP DELAY ON EVOLV FAULTS: 0.000 s**	Range: 0 to 65.535 s in steps of 0.001
⇕	**BKR ΦA OPEN: Off**	Range: FlexLogic operand
⇕	**BKR ΦB OPEN: Off**	Range: FlexLogic operand
⇕	**BKR ΦC OPEN: Off**	Range: FlexLogic operand
⇑	**TRIP EVENTS: Disabled**	Range: Enabled, Disabled

The trip output element is primarily used to collect trip requests from protection elements and other inputs to generate output operands to initiate trip operations. Three pole trips only initiate reclosure if programmed to do so, whereas single pole trips always automatically initiate reclosure. The TRIP 3-POLE and TRIP 1-POLE output operands can also be used as inputs to a FlexLogic OR gate to operate the faceplate Trip indicator LED.

5.8.5.1 Three pole operation

In applications where single-pole tripping is not required this element provides a convenient method of collecting inputs to initiate tripping of circuit breakers, the reclose element and breaker failure elements.

5.8.5.2 Single pole operation

NOTE

This element must be used in single pole operation applications.

This element is used to:

- Determine if a single pole operation is to be performed
- Collect inputs to initiate three pole tripping, the recloser and breaker failure elements
- Collect inputs to initiate single pole tripping, the recloser and breaker failure elements
- Assign a higher priority to pilot aided scheme outputs than to exclusively local inputs

The trip output element works in association with other L90 elements that must be programmed and in-service for successful operation. The necessary elements are: recloser, breaker control, open pole detector, and phase selector. The recloser must also be in the "Reset" state before a single pole trip can be issued. Outputs from this element are also directly connected as initiate signals to the breaker failure elements.

At least one internal protection element or digital input representing detection of a fault must be available as an input to this element. In pilot-aided scheme applications, a timer can be used to delay the output decision until data from a remote terminal is received from communications facilities, to prevent a three pole operation where a single pole operation is permitted.

The trip output element is used to aggregate inputs from appropriate protection elements (including 87L line differential, distance, and instantaneous overcurrent functions) to provide single-pole tripping. The line current differential function is hard-wired through the 87L TRIP function, which has to be enabled and configured properly.

The 87L TRIP function collects inputs from both the 87L line differential and 87L DTT functions. It can be supervised by the disturbance detector and determines if the fault type is single-line-to-ground or multi-phase. The 87L TRIP function sends a direct command to the trip output element to execute appropriate tripping action without any consultation with phase selector.

Other protective functions, such as distance and overcurrent, need to be assigned to appropriate trip output single pole or three pole inputs and require phase selector fault identification for tripping action. A timer defined by the **TRIP PILOT PRIORITY** setting can be used to delay the output decision from other local protection elements to give 87L operational priority. This prevents three pole operation where a single pole operation is permitted.

NOTE

To ensure correct operation of the single pole tripping feature, any non-distance protection used for single pole tripping (such as high-set overcurrent using the instantaneous or directional overcurrent elements) must be blocked by the OPEN POLE OP ΦA, OPEN POLE OP ΦB, or OPEN POLE OP ΦC operands. For example, instantaneous overcurrent phase A is blocked by OPEN POLE OP ΦA operand. This blocking condition is pre-wired for distance protection.

The following settings are available for the trip output element.

TRIP MODE — This setting is used to select the required mode of operation. If selected to "3 Pole Only" outputs for all three phases are always set simultaneously. If selected to "3 Pole & 1 Pole" outputs for all three phases are set simultaneously unless the phase selector or a pilot aided scheme determines the fault is single-phase-to-ground. If the fault is identified as being AG, BG, or CG only, the operands for the faulted phase are asserted.

TRIP 3-POLE INPUT1 to **TRIP 3-POLE INPUT6** — These settings are used to select an operand representing a fault condition that is not wanted to initiate a single pole operation (for example, phase undervoltage). Use a FlexLogic OR-gate if more than six inputs are required.

TRIP 1-POLE INPUT1 to **TRIP 1-POLE INPUT6** — These settings are used to select an operand representing a fault condition that is wanted to initiate a single pole trip-and-reclose if the fault is single phase to ground (for example, distance zone 1). Use a FlexLogic OR-gate if more than six inputs are required. The inputs do not have to be phase-specific as the phase selector determines the fault type.

The AR FORCE 3-P TRIP operand is asserted by the autorecloser 1.5 cycles after single-pole reclosing is initiated. This operand calls for a three-pole trip if any protection element configured under **TRIP 1-POLE INPUT** remains picked-up. The open pole detector provides blocking inputs to distance elements, and therefore the latter resets immediately after the **TRIP 1-POLE** operand asserts. For other protection elements used in single-pole tripping, ensure that they reset immediately after tripping, otherwise the fact that they are still picked up is detected as an evolving fault and the relay trips three-poles. For example, if high-set phase instantaneous overcurrent is used (**TRIP 1-POLE INPUT X**: "PHASE IOC1 OP"), then OPEN POLE OP ΦA is used for blocking phase A of the instantaneous overcurrent element. In this way, after tripping phase A, the phase a instantaneous overcurrent element is forced to reset. Phases B and C are still operational and can detect an evolving fault as soon as 8 ms after tripping phase A. Neutral and negative-sequence instantaneous overcurrent elements are blocked from the OPEN POLE BLK N operand unless the pickup setting is high enough to prevent pickup during single-pole reclosing.

TRIP RECLOSE INPUT1 to **TRIP RECLOSE INPUT6** — These settings select an operand representing a fault condition that is wanted to initiate three pole reclosing (for example, phase distance zone 1). Use a FlexLogic OR-gate if more than six inputs are required. These inputs also include the **TRIP 1-POLE INPUT1** to **TRIP 1-POLE INPUT6** values, which are intended to

initiate three-pole reclosing in situations where single-pole tripping commands are changed to three-pole tripping commands. This can happen in cases where the phase selector identifies a multi-phase fault or the **AR FORCE 3P TRIP** command is present.

TRIP SEAL-IN DELAY — This setting specifies the minimum time that trip command signals are maintained to provide sufficient time to open the breaker poles. If a value of "0" is specified, then the output signal is reset once the protection elements initiating the trip are reset. If a value other than "0" is specified, then the protection elements must reset and the timer initiated at the first trip command must expire.

TRIP RESET — This setting selects the option to reset the trip latches. If "Pole Curr OR Custom" is chosen, then program the **OPEN POLE CURRENT PKP** setting accordingly. If "CBaux OR Custom" is chosen, then set the breakers appropriately. Both the "Current" and "CBaux" options can be complimented by custom conditions using the **BKR ΦA OPEN**, **BKR ΦB OPEN**, and **BKR ΦC OPEN** settings indicated below. Alternately, a purely custom condition can be applied to reset trip output latches.

START TMR Z2PH Inp1 and **START TMR Z2PH Inp2** — These settings select an operand that starts the phase distance zone 2 timer to avoid a trip delay if the fault evolves from one type to another type (for example, from a single-line–to-ground fault to a multi-phase fault) or from one zone of protection to another zone of protection (for example, from zone 3 to zone 2). For instance, the GND DIST Z2 PKP FlexLogic operand or the PH DIST Z3 PKP FlexLogic operand can be assigned to either of these settings. Use a FlexLogic OR-gate if more than two inputs are required. See the phase distance logic diagrams for information.

START TMR Z2GR Inp1 and **START TMR Z2GR Inp2** — These settings select an operand that starts the ground distance zone 2 timer to avoid a trip delay if the fault evolves from one zone of protection to another zone of protection (for example, from zone 3 to zone 2). For instance, the GND DIST Z3 PKP FlexLogic operand can be assigned to these settings. Use a FlexLogic OR-gate if more than two inputs are required. See the ground distance logic diagrams for information.

PH SELECTOR RST DELAY — This setting specifies the reset delay of the Phase Selector element outputs after system disturbance occurs. This delay has to be long enough to allow elements assigned to cause single-pole tripping to operate. If, for example, it is intended that distance zone 2 with a time delay of 0.5 seconds causes a single-pole trip, then this setting has to be at least 0.6 seconds.

PH SELECTOR RESET — This setting selects an operand to reset the Phase Selector element. The selected operand is ORed with the OPEN POLE OP operand internally to reset the phase selector element. See the Phase Selection section in the Theory of Operation chapter for details.

TRIP FORCE 3-POLE — Selects an operand that forces an input selected for single pole operation to produce a three-pole operation. The AR DISABLED FlexLogic operand is the recommended value for this setting. Power system configurations or conditions that require such operations can be considered as well.

TRIP PILOT PRIORITY — This setting is used to set an interval equal to the inter-relay channel communications time, plus a margin, during which outputs are not asserted. This delay permits fault identification information from a remote terminal to be used instead of local data only.

REVERSE FAULT — Use this setting to guarantee accuracy of single-pole tripping under evolving external to internal faults. When a close-in external fault occurs, the relay is biased toward very fast operation on a following internal fault. This is primarily due to depressed voltages and elevated currents in response to the first, external fault. The phase selector can exhibit some time lag compared to the main protection elements. This can potentially result in a spurious three-pole operation on a single-line-to-ground internal fault. Delaying tripping on internal faults that follow detection of reverse faults solves the problem.

As long as the operand indicated under this setting is asserted the trip action is delayed by **TRIP DELAY ON EVOLV FAULTS** time. Typically this operand should combine reverse zone indications (such as zone 4 pickup) with a half-cycle pickup delay, and two-cycle dropout delay. Use this setting only in single-pole tripping applications, when evolving faults are of importance, and slightly delayed operation on evolving faults can be traded for enhanced accuracy of single-pole tripping.

TRIP DELAY ON EVOLV FAULTS — Use this setting in conjunction with the preceding **REVERSE FAULT** setting. Typically this value is set around half a power system cycle. Use it only in single-pole tripping applications, when evolving faults are of importance, and slightly delayed operation on evolving faults can be traded for enhanced accuracy of single-pole tripping.

BKR ΦA OPEN, **BKR ΦB OPEN**, and **BKR ΦC OPEN** — These settings are used to select an operand to indicates that phase A, B, or C of the breaker is open, respectively.

Figure 5-193: Trip output logic (Sheet 1 of 2)

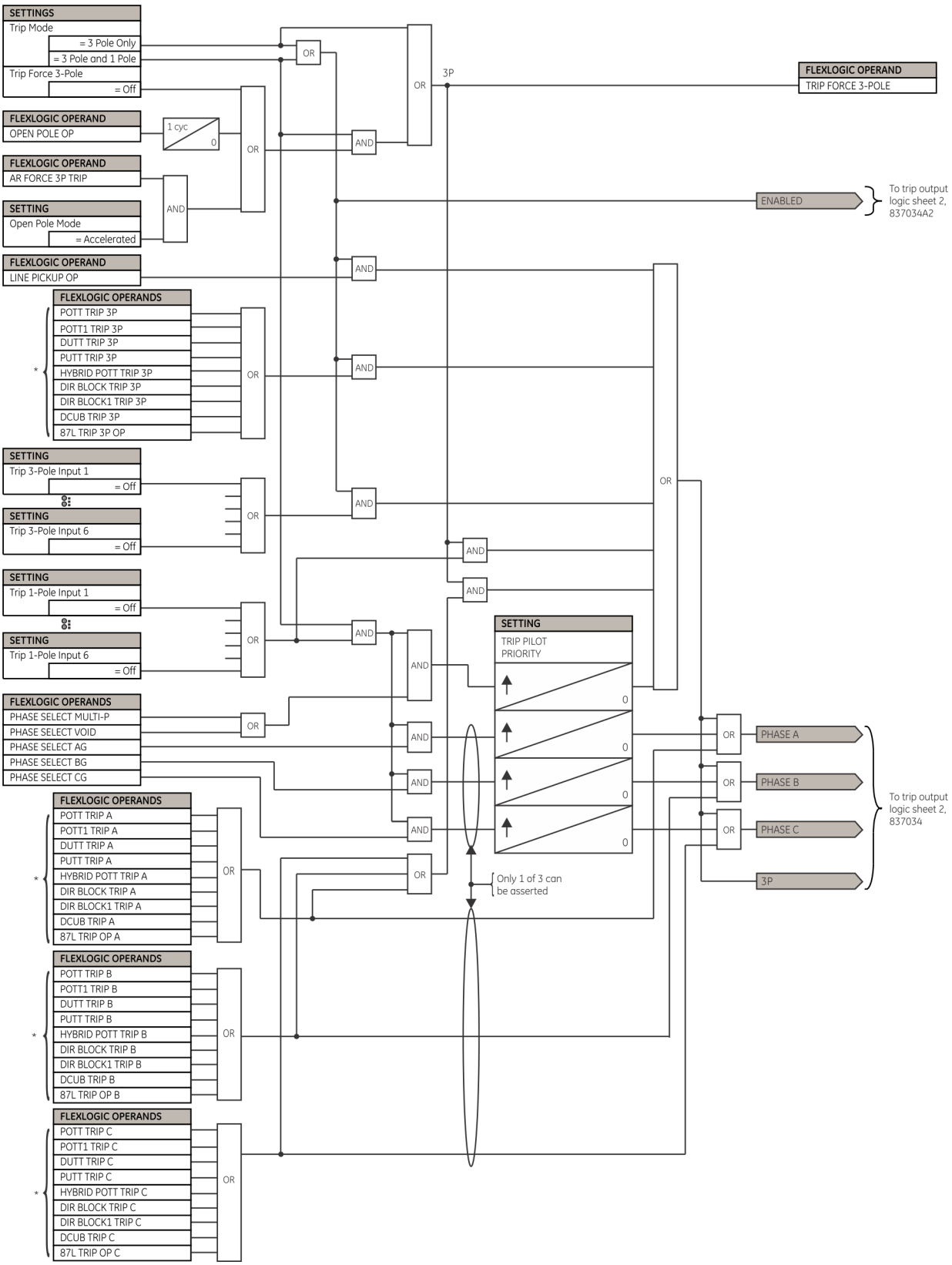

Figure 5-194: Trip output logic (Sheet 2 of 2)

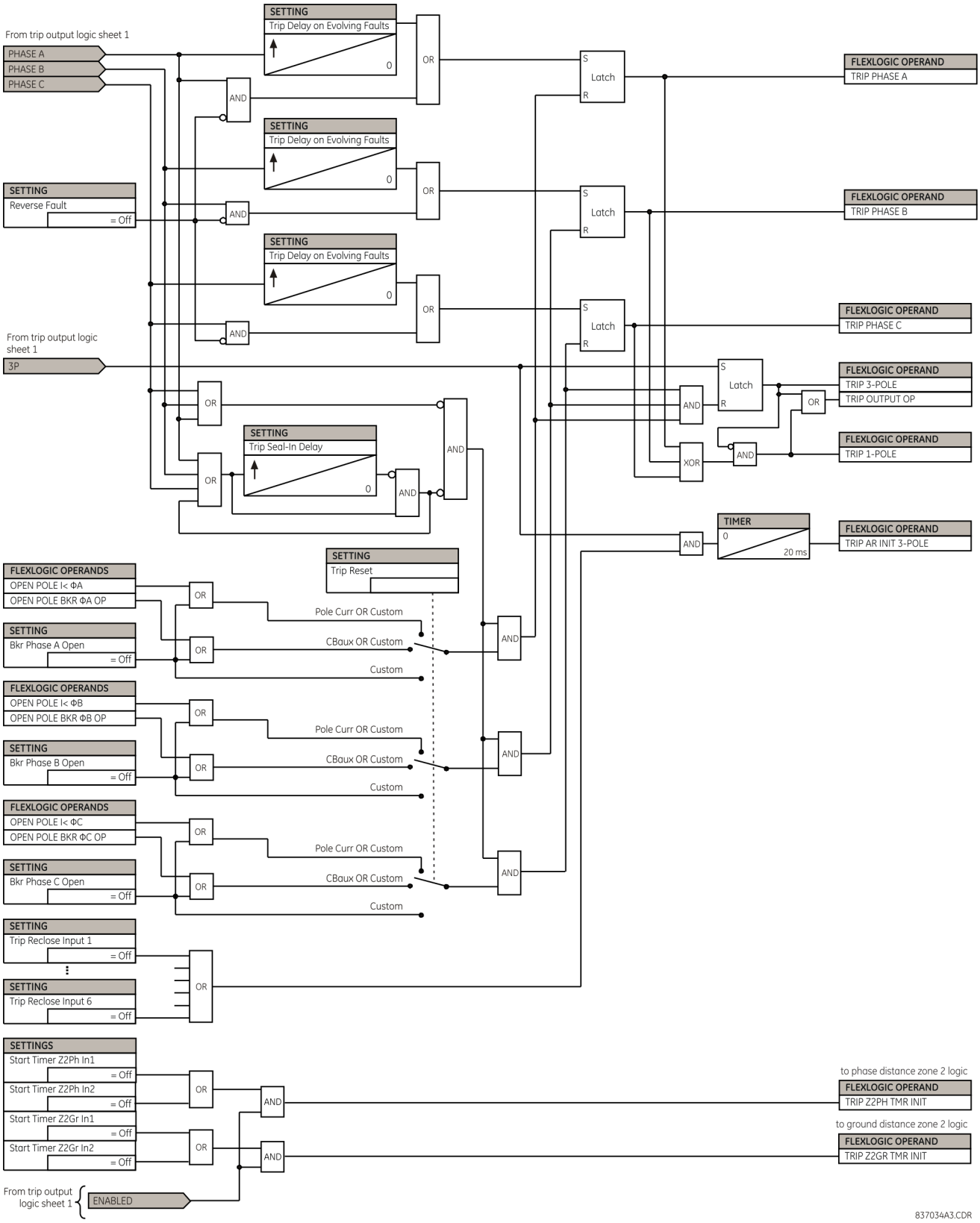

5.8.6 Underfrequency (ANSI 81U)

SETTINGS ⇨⇩ CONTROL ELEMENTS ⇨⇩ UNDERFREQUENCY ⇨⇩ UNDERFREQUENCY 1(6)

■ **UNDERFREQUENCY 1** ■	⇔	**UNDFREQ 1 FUNCTION: Disabled**	Range: Disabled, Enabled
	⇩	**UNDERFREQ 1 BLOCK: Off**	Range: FlexLogic operand
	⇩	**UNDERFREQ 1 SOURCE: SRC 1**	Range: SRC 1, SRC 2, SRC 3, SRC 4
	⇩	**UNDERFREQ 1 MIN VOLT/AMP: 0.10 pu**	Range: 0.10 to 1.25 pu in steps of 0.01
	⇩	**UNDERFREQ 1 PICKUP: 59.50 Hz**	Range: 20.00 to 65.00 Hz in steps of 0.01
	⇩	**UNDERFREQ 1 PICKUP DELAY: 2.000 s**	Range: 0.000 to 65.535 s in steps of 0.001
	⇩	**UNDERFREQ 1 RESET DELAY: 2.000 s**	Range: 0.000 to 65.535 s in steps of 0.001
	⇩	**UNDERFREQ 1 TARGET: Self-reset**	Range: Self-reset, Latched, Disabled
	⇧	**UNDERFREQ 1 EVENTS: Disabled**	Range: Disabled, Enabled

There are six identical underfrequency elements, numbered 1 through 6.

The steady-state frequency of a power system is a certain indicator of the existing balance between the generated power and the load. Whenever this balance is disrupted through the loss of an important generating unit or the isolation of part of the system from the rest of the system, the effect is a reduction in frequency. If the control systems of the system generators do not respond fast enough, the system can collapse. A reliable method to quickly restore the balance between load and generation is to automatically disconnect selected loads, based on the actual system frequency. This technique, called "load-shedding," maintains system integrity and minimize widespread outages. After the frequency returns to normal, the load can be restored automatically or manually.

UNDERFREQ 1 SOURCE — This setting is used to select the source for the signal to be measured. The element first checks for a live phase voltage available from the selected source. If voltage is not available, the element attempts to use a phase current. If neither voltage nor current is available, the element does not operate, as it does not measure a parameter below the minimum voltage/current setting.

UNDERFREQ 1 MIN VOLT/AMP — Selects the minimum per unit voltage or current level required to allow the underfrequency element to operate. This threshold is used to prevent an incorrect operation because there is no signal to measure.

UNDERFREQ 1 PICKUP — Selects the level at which the underfrequency element is to pickup. For example, if the system frequency is 60 Hz and the load shedding is required at 59.5 Hz, the setting is 59.50 Hz.

Figure 5-195: Underfrequency logic

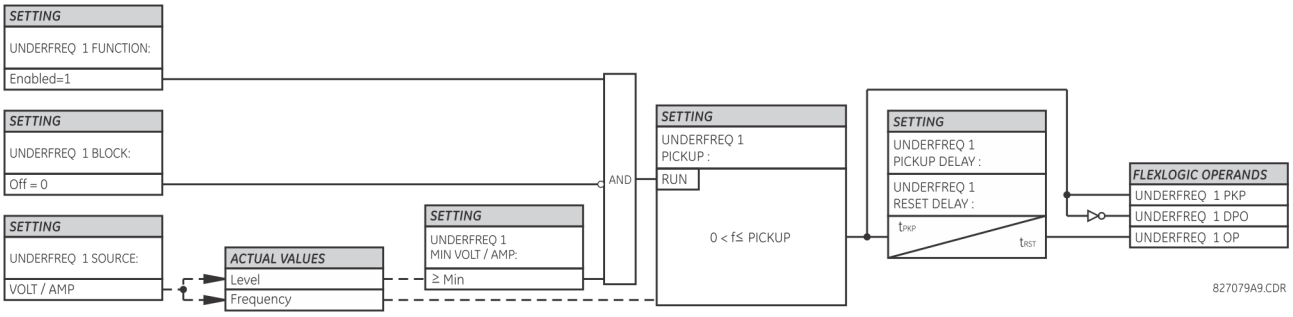

5.8.7 Overfrequency (ANSI 81O)

SETTINGS ⇨⇩ CONTROL ELEMENTS ⇨⇩ OVERFREQUENCY ⇨⇩ OVERFREQUENCY 1(4)

■ **OVERFREQUENCY 1** ■	⇔	**OVERFREQ 1 FUNCTION: Disabled**	Range: Disabled, Enabled
	⇩	**OVERFREQ 1 BLOCK: Off**	Range: FlexLogic operand
	⇩	**OVERFREQ 1 SOURCE: SRC 1**	Range: SRC 1, SRC 2, SRC 3, SRC 4
	⇩	**OVERFREQ 1 PICKUP: 60.50 Hz**	Range: 20.00 to 65.00 Hz in steps of 0.01
	⇩	**OVERFREQ 1 PICKUP DELAY: 0.500 s**	Range: 0.000 to 65.535 s in steps of 0.001
	⇩	**OVERFREQ 1 RESET DELAY : 0.500 s**	Range: 0.000 to 65.535 s in steps of 0.001
	⇩	**OVERFREQ 1 TARGET: Self-reset**	Range: Self-reset, Latched, Disabled
	⇧	**OVERFREQ 1 EVENTS: Disabled**	Range: Disabled, Enabled

There are four overfrequency elements, numbered 1 through 4.

A frequency calculation for a given source is made on the input of a voltage or current channel, depending on which is available. The channels are searched for the signal input in the following order: voltage channel A, auxiliary voltage channel, current channel A, and ground current channel. The first available signal is used for frequency calculation.

The steady-state frequency of a power system is an indicator of the existing balance between the generated power and the load. Whenever this balance is disrupted through the disconnection of significant load or the isolation of a part of the system that has a surplus of generation, the effect is an increase in frequency. If the control systems of the generators do not respond fast enough, to quickly ramp the turbine speed back to normal, the overspeed can lead to the turbine trip. The overfrequency element can be used to control the turbine frequency ramp down at a generating location. This element can also be used for feeder reclosing as part of the "after load shedding restoration."

The **OVERFREQ 1 SOURCE** setting selects the source for the signal to be measured.

The **OVERFREQ 1 PICKUP** setting selects the level at which the overfrequency element is to pickup.

Figure 5-196: Overfrequency logic

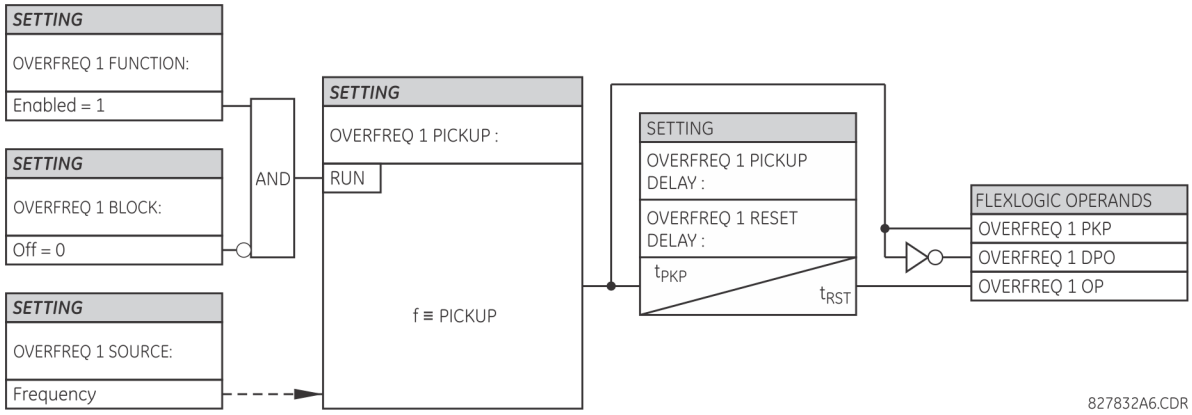

5.8.8 Synchrocheck (ANSI 25)

SETTINGS ⇨⇩ CONTROL ELEMENTS ⇨⇩ SYNCHROCHECK ⇨ SYNCHROCHECK 1(10)

■ SYNCHROCHECK 1 ■	⇔	SYNCHK1 FUNCTION: Disabled	Range: Disabled, Enabled
	⇩	SYNCHK1 BLOCK: Off	Range: FlexLogic operand
	⇩	SYNCHK1 V1 SOURCE: SRC 1	Range: SRC 1, SRC 2, SRC 3, SRC 4
	⇩	SYNCHK1 V2 SOURCE: SRC 2	Range: SRC 1, SRC 2, SRC 3, SRC 4
	⇩	SYNCHK1 MAX VOLT DIFF: 10000 V	Range: 0 to 400000 V in steps of 1
	⇩	SYNCHK1 MAX ANGLE DIFF: 30	Range: 0 to 100° in steps of 1
	⇩	SYNCHK1 MAX FREQ DIFF: 1.00 Hz	Range: 0.00 to 2.00 Hz in steps of 0.01
	⇩	SYNCHK1 MAX FREQ HYSTERESIS: 0.06 Hz	Range: 0.00 to 0.10 Hz in steps of 0.01
	⇩	SYNCHK1 SYNC CLOSE: Off	Range: FlexLogic operand
	⇩	SYNCHK1 S-CLS MAX dF: 0.50 Hz	Range: 0.10 to 2.00 Hz in steps of 0.01
	⇩	SYNCHK1 S-CLS MIN dF: 0.10 Hz	Range: 0.01 to 1.00 Hz in steps of 0.01
	⇩	SYNCHK1 S-CLS BRK TIME: 0.035 s	Range: 0.010 to 0.500 s in steps of 0.001
	⇩	SYNCHK1 V2 MAG CORR FACTOR: 1.00	Range: 0.10 to 10.00 in steps of 0.01
	⇩	SYNCHK1 V2 ANGLE SHIFT: 0	Range: -180 to +180 degrees in steps of 1
	⇩	SYNCHK1 DEAD SOURCE SELECT: LV1 and DV2	Range: None, LV1 and DV2, DV1 and LV2, DV1 or DV2, DV1 Xor DV2, DV1 and DV2
	⇩	SYNCHK1 DEAD V1 MAX VOLT: 0.30 pu	Range: 0.04 to 1.25 pu in steps of 0.01
	⇩	SYNCHK1 DEAD V2 MAX VOLT: 0.30 pu	Range: 0.04 to 1.25 pu in steps of 0.01
	⇩	SYNCHK1 LIVE V1 MIN VOLT: 0.70 pu	Range: 0.04 to 1.25 pu in steps of 0.01
	⇩	SYNCHK1 LIVE V2 MIN VOLT: 0.70 pu	Range: 0.04 to 1.25 pu in steps of 0.01
	⇩	SYNCHK1 TARGET: Self-reset	Range: Self-reset, Latched, Disabled
	⇧	SYNCHK1 EVENTS: Disabled	Range: Disabled, Enabled

The synchronism check function supervises the paralleling of two parts of a system that are to be joined by the closure of a circuit breaker. The synchrocheck elements are typically used at locations where the two parts of the system are interconnected through at least one other point in the system.

Synchrocheck verifies that the voltages (V1 and V2) on the two sides of the supervised circuit breaker are within set limits of magnitude, angle, and frequency differences. The time that the two voltages remain within the admissible angle difference is determined by the setting of the phase angle difference ΔΦ and the frequency difference ΔF (slip frequency). It can be defined as the time it takes the voltage phasor V1 or V2 to traverse an angle equal to 2 × ΔΦ at a frequency equal to the frequency difference ΔF. This time is calculated by:

$$T = \frac{1}{\frac{360°}{2 \times \Delta\Phi} \times \Delta F} \qquad \textbf{Eq. 5-43}$$

where

ΔΦ is phase angle difference in degrees
ΔF is frequency difference in Hz

If one or both sources are de-energized, the synchrocheck programming can allow for closing of the circuit breaker using undervoltage control to bypass the synchrocheck measurements (dead source function).

SYNCHK1 V1 SOURCE — This setting selects the source for voltage V1 (see the Notes section that follows).

SYNCHK1 V2 SOURCE — Selects the source for voltage V2, which must not be the same as used for the V1 (see Notes).

SYNCHK1 MAX VOLT DIFF — Selects the maximum primary voltage difference in volts between the two sources. A primary voltage magnitude difference between the two input voltages below this value is within the permissible limit for synchronism.

SYNCHK1 MAX ANGLE DIFF — Selects the maximum angular difference in degrees between the two sources. An angular difference between the two input voltage phasors below this value is within the permissible limit for synchronism.

5

SYNCHK1 MAX FREQ HYSTERESIS — Specifies the required hysteresis for the maximum frequency difference condition. The condition becomes satisfied when the frequency difference becomes lower than **SYNCHK1 MAX FREQ DIFF**. Once the Synchrocheck element has operated, the frequency difference must increase above the **SYNCHK1 MAX FREQ DIFF + SYNCHK1 MAX FREQ HYSTERESIS** sum to drop out (assuming the other two conditions, voltage and angle, remain satisfied).

SYNCHK1 SYNC CLOSE — Enables the dynamic mode of synchrocheck. When it is enabled, the location of where the present V2 vector will be arriving to synchronize (shown as V2' in the figures here) with breaker close time being taken into account will be predicted based on the measured slip frequency so that breaker close command can be issued in advance to ensure the synchronism at the time when the breaker is actually closed.

Figure 5-197: Synchrocheck plot for slip > 0 (slip = F2-F1)

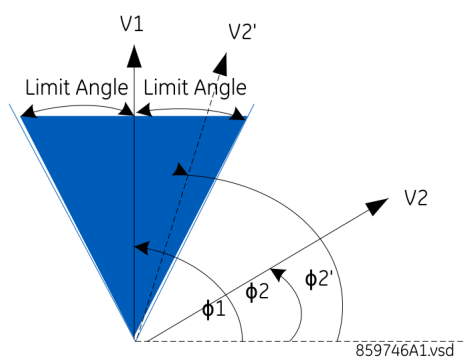

Figure 5-198: Synchrocheck plot for slip < 0 (slip = F2-F1)

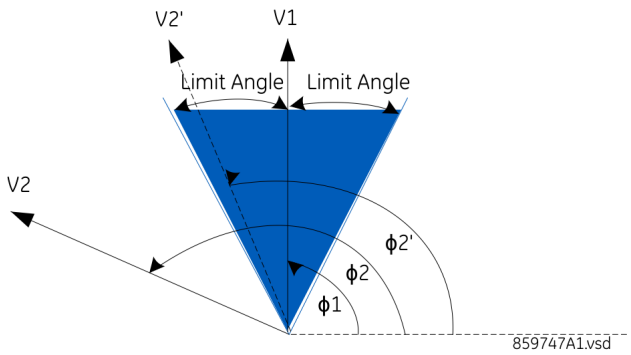

SYNCHK1 S-CLS MAX dF — Specifies the maximum slip frequency allowed in Hz in the dynamic mode. The dynamic mode is disarmed when the slip frequency exceeds this setting.

SYNCHK1 S-CLS MIN dF — Specifies the minimum slip frequency allowed in Hz in the dynamic mode. The dynamic mode is disarmed when the slip frequency drops below this setting.

SYNCHK1 S-CLS BRK TIME — Specifies the breaker closing time in seconds.

SYNCHK1 V2 MAG CORR FACTOR — Specifies the magnitude correction factor of source V2. This setting is used for V2 magnitude compensation so that V2 magnitude can be directly compared with V1 magnitude. For example, when V1 and V2 are taken from 2 different windings of the transformer and at different voltage levels, the magnitude compensation must be performed before starting magnitude comparison in synchrocheck element.

SYNCHK1 V2 ANGLE SHIFT — Specifies the angle of source V2 that needs to be shifted so that V2 angle can be directly compared with V1 angle. For example, when V1 and V2 are taken from two different windings of the transformer and with different angle shift due to winding connections, the angle shift compensation must be performed before starting angle comparison in synchrocheck element.

SYNCHK1 DEAD SOURCE SELECT — Selects the combination of dead and live sources that bypass the synchronism check function and permit the breaker to be closed when one or both of the two voltages (V1 or/and V2) are below the maximum voltage threshold. A dead or live source is declared by monitoring the voltage level. Six options are available:

None — Dead Source function is disabled
LV1 and DV2 — Live V1 and Dead V2
DV1 and LV2 — Dead V1 and Live V2
DV1 or DV2 — Dead V1 or Dead V2
DV1 Xor DV2 — Dead V1 exclusive-or Dead V2 (one source is Dead and the other is Live)
DV1 and DV2 — Dead V1 and Dead V2

SYNCHK1 DEAD V1 MAX VOLT — Establishes a maximum voltage magnitude for V1 in 1 'pu'. Below this magnitude, the V1 voltage input used for synchrocheck is considered "Dead" or de-energized.

SYNCHK1 DEAD V2 MAX VOLT — Establishes a maximum voltage magnitude for V2 in 'pu'. Below this magnitude, the V2 voltage input used for synchrocheck is considered "Dead" or de-energized.

SYNCHK1 LIVE V1 MIN VOLT — Establishes a minimum voltage magnitude for V1 in 'pu'. Above this magnitude, the V1 voltage input used for synchrocheck is considered "Live" or energized.

SYNCHK1 LIVE V2 MIN VOLT — This setting establishes a minimum voltage magnitude for V2 in 'pu'. Above this magnitude, the V2 voltage input used for synchrocheck is considered "Live" or energized.

Notes on the synchrocheck function

1. The selected sources for synchrocheck inputs V1 and V2 (which must not be the same source) can include both a three-phase and an auxiliary voltage. The relay automatically selects the specific voltages to be used by the synchrocheck element in accordance with the following table.

Number	V1 or V2 (source Y)	V2 or V1 (source Z)	Auto-selected combination		Auto-selected voltage
			Source Y	Source Z	
1	Phase VTs and Auxiliary VT	Phase VTs and Auxiliary VT	Phase	Phase	VAB
2	Phase VTs and Auxiliary VT	Phase VT	Phase	Phase	VAB
3	Phase VT	Phase VT	Phase	Phase	VAB
4	Phase VT and Auxiliary VT	Auxiliary VT	Phase	Auxiliary	V auxiliary (as set for source Z)
5	Auxiliary VT	Auxiliary VT	Auxiliary	Auxiliary	V auxiliary (as set for selected sources)

The voltages V1 and V2 are matched automatically so that the corresponding voltages from the two sources are used to measure conditions. A phase to phase voltage is used if available in both sources; if one or both of the Sources have only an auxiliary voltage, this voltage is used. For example, if an auxiliary voltage is programmed to VAG, the synchrocheck element automatically selects VAG from the other source. If the comparison is required on a specific voltage, the user can externally connect that specific voltage to auxiliary voltage terminals and then use this "Auxiliary Voltage" to check the synchronism conditions.

If using a single CT/VT module with both phase voltages and an auxiliary voltage, ensure that only the auxiliary voltage is programmed in one of the sources to be used for synchrocheck. An exception is that synchronism cannot be checked between Delta connected phase VTs and a Wye connected auxiliary voltage.

2. The relay measures frequency and Volts/Hz from an input on a given source with priorities as established by the configuration of input channels to the source. The relay uses the phase channel of a three-phase set of voltages if programmed as part of that source. The relay uses the auxiliary voltage channel only if that channel is programmed as part of the Source and a three-phase set is not.

Figure 5-199: Synchrocheck logic

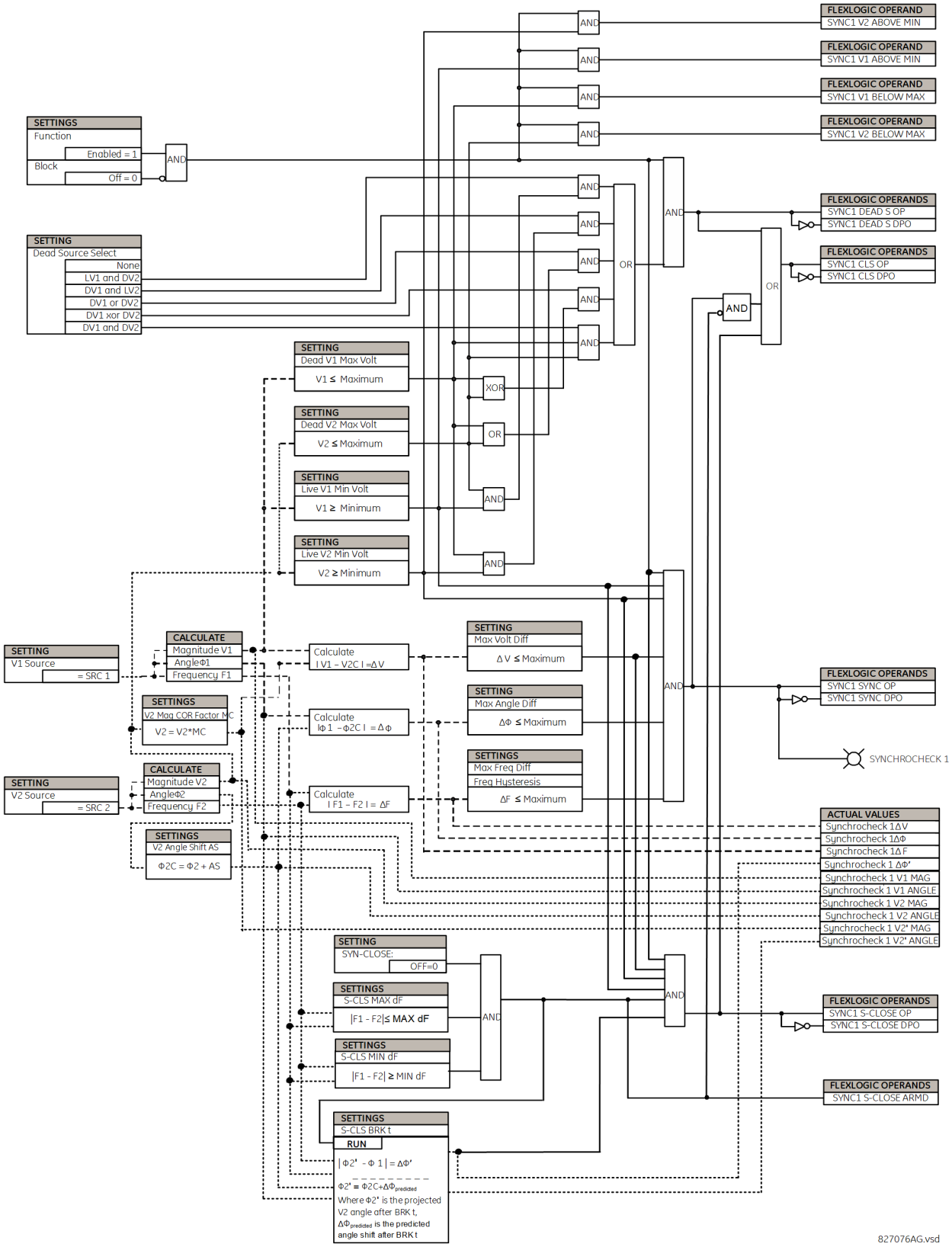

5.8.9 Digital elements

SETTINGS ⇨⇩ CONTROL ELEMENTS ⇨⇩ DIGITAL ELEMENTS ⇨ DIGITAL ELEMENT 1(48)

■ DIGITAL ELEMENT 1 ■	⇔	DIGITAL ELEMENT 1 FUNCTION: Disabled	Range: Disabled, Enabled
	⇩	DIG ELEM 1 NAME: Dig Element 1	Range: up to 16 alphanumeric characters
	⇩	DIG ELEM 1 INPUT: Off	Range: FlexLogic operand
	⇩	DIG ELEM 1 PICKUP DELAY: 0.000 s	Range: 0.000 to 999999.999 s in steps of 0.001
	⇩	DIG ELEM 1 RESET DELAY: 0.000 s	Range: 0.000 to 999999.999 s in steps of 0.001
	⇩	DIGITAL ELEMENT 1 PICKUP LED: Enabled	Range: Disabled, Enabled
	⇩	DIG ELEM 1 BLOCK: Off	Range: FlexLogic operand
	⇩	DIGITAL ELEMENT 1 TARGET: Self-reset	Range: Self-reset, Latched, Disabled
	⇧	DIGITAL ELEMENT 1 EVENTS: Disabled	Range: Disabled, Enabled

5

NOTE

Digital elements run once per power system cycle.

As such they can easily fail to react to an input signal or a block signal with a duration less than one power system cycle. This also means that digital element output can react up to one power system cycle later than the pickup and reset delay settings indicate.

Do not use digital elements with transient signals, such as communications commands. Do not use digital elements where random delays of up to one cycle cannot be tolerated, such as in high speed protection.

There are 48 identical digital elements available, numbered 1 to 48. A digital element can monitor any FlexLogic operand and present a target message and/or enable events recording depending on the output operand state. The digital element settings include a name to be referenced in any target message, a blocking input from any selected FlexLogic operand, and a timer for pickup and reset delays for the output operand.

DIGITAL ELEMENT 1 INPUT — Selects a FlexLogic operand to be monitored by the digital element.

DIGITAL ELEMENT 1 PICKUP DELAY — Sets the required time delay from element pickup to element operation. If a pickup delay is not required, set to "0," To avoid nuisance alarms, set the delay greater than the operating time of the breaker.

DIGITAL ELEMENT 1 RESET DELAY — Sets the time delay to reset. If a reset delay is not required, set to “0.”

DIGITAL ELEMENT 1 PICKUP LED — This setting enables or disabled the digital element pickup LED. When set to “Disabled,” the operation of the pickup LED is blocked.

Figure 5-200: Digital element logic

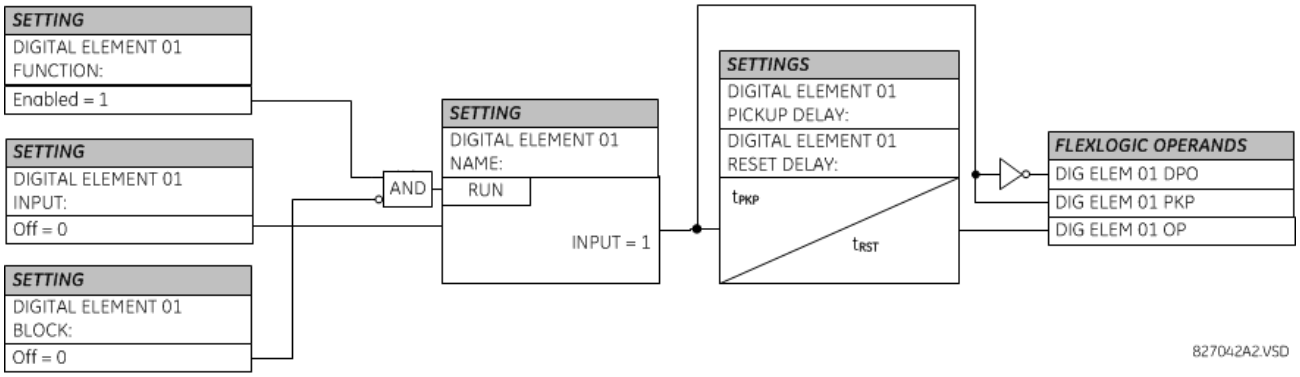

Circuit monitoring applications

Some versions of the digital input modules include an active voltage monitor circuit connected across form-A contacts. The voltage monitor circuit limits the trickle current through the output circuit (see technical specifications for form-A).

As long as the current through the voltage monitor is above a threshold (see technical specifications for form-A), the Cont Op 1 VOn FlexLogic operand is set (for contact input 1—corresponding operands exist for each contact output). If the output circuit has a high resistance or the DC current is interrupted, the trickle current drops below the threshold and the Cont Op 1 VOff FlexLogic operand is set. Consequently, the state of these operands can be used as indicators of the integrity of the circuits in which form-A contacts are inserted.

Example 1: Breaker trip circuit integrity monitoring

In many applications it is desired to monitor the breaker trip circuit integrity so that problems can be detected before a trip operation is required. The circuit is considered to be healthy when the voltage monitor connected across the trip output contact detects a low level of current, well below the operating current of the breaker trip coil. If the circuit presents a high resistance, the trickle current falls below the monitor threshold, and an alarm is declared.

In most breaker control circuits, the trip coil is connected in series with a breaker auxiliary contact that is open when the breaker is open (see figure). To prevent unwanted alarms in this situation, the trip circuit monitoring logic must include the breaker position.

Figure 5-201: Trip circuit example 1

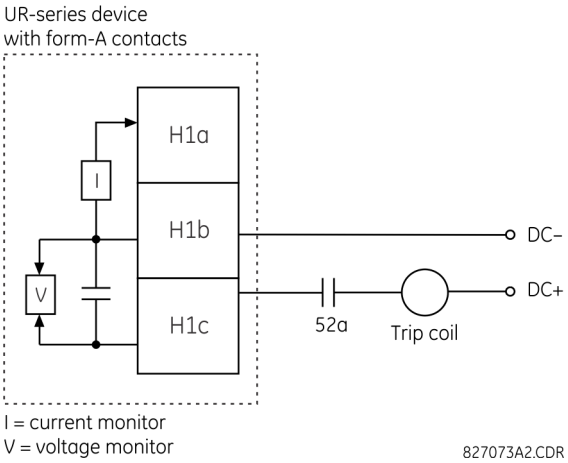

Assume the output contact H1 is a trip contact. Using the contact output settings, this output is given an ID name; for example, "Cont Op 1." Assume a 52a breaker auxiliary contact is connected to contact input H5a to monitor breaker status. Using the contact input settings, this input is given an ID name, for example, "Cont Ip 1," and is set "On" when the breaker is closed. The settings to use digital element 1 to monitor the breaker trip circuit are indicated (EnerVista example shown).

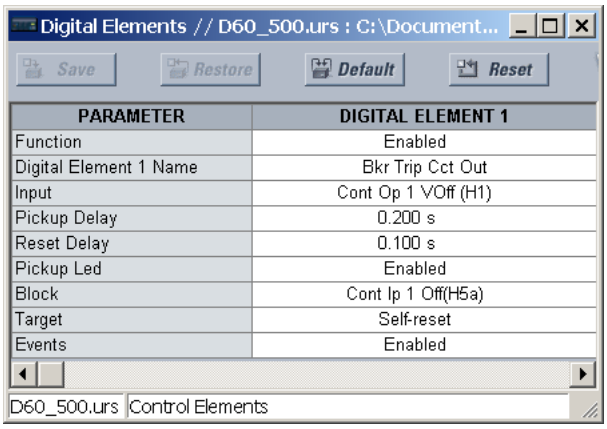

PARAMETER	DIGITAL ELEMENT 1
Function	Enabled
Digital Element 1 Name	Bkr Trip Cct Out
Input	Cont Op 1 VOff (H1)
Pickup Delay	0.200 s
Reset Delay	0.100 s
Pickup Led	Enabled
Block	Cont Ip 1 Off(H5a)
Target	Self-reset
Events	Enabled

Example 2: Breaker trip circuit integrity monitoring

If it is required to monitor the trip circuit continuously, independent of the breaker position (open or closed), a method to maintain the monitoring current flow through the trip circuit when the breaker is open must be provided (as shown in the following figure). This can be achieved by connecting a suitable resistor (see figure) across the auxiliary contact in the trip circuit. In this case, it is not required to supervise the monitoring circuit with the breaker position – the **BLOCK** setting is selected to "Off." In this case, the settings are as follows (EnerVista example shown).

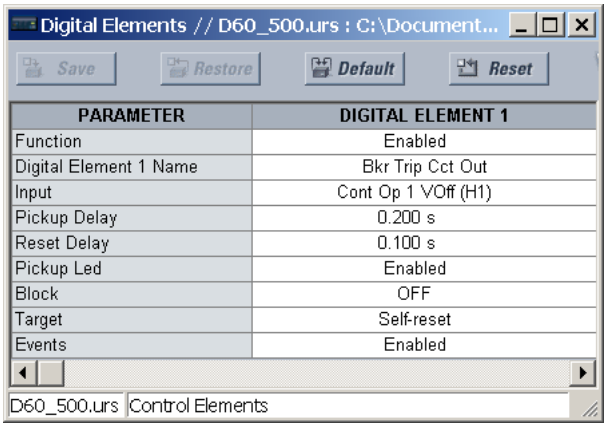

PARAMETER	DIGITAL ELEMENT 1
Function	Enabled
Digital Element 1 Name	Bkr Trip Cct Out
Input	Cont Op 1 VOff (H1)
Pickup Delay	0.200 s
Reset Delay	0.100 s
Pickup Led	Enabled
Block	OFF
Target	Self-reset
Events	Enabled

Figure 5-202: Trip circuit example 2

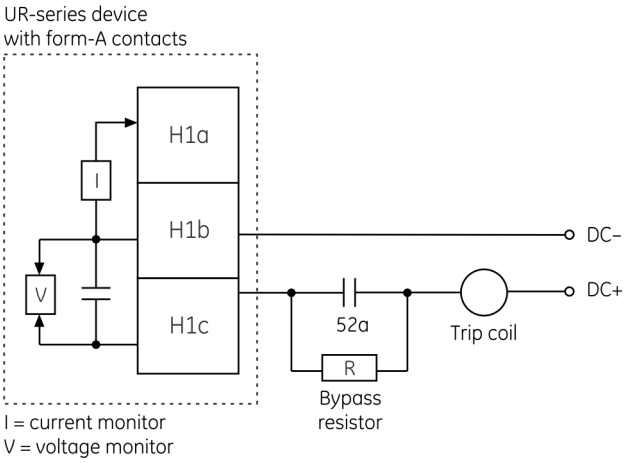

Values for resistor "R"

Power supply	Resistance	Power
24 V DC	1000 O	2 W
30 V DC	5000 O	2 W
48 V DC	10000 O	2 W
110 V DC	25000 O	5 W
125 V DC	25000 O	5 W
250 V DC	50000 O	5 W

827074A3.CDR

NOTE

The wiring connection for two examples above is applicable to both form-A contacts with voltage monitoring and solid-state contact with voltage monitoring.

5.8.10 Digital counters

SETTINGS ⇨⇩ CONTROL ELEMENTS ⇨⇩ DIGITAL COUNTERS ⇨⇩ COUNTER 1(8)

■ COUNTER 1 ■	⇔	COUNTER 1 FUNCTION: Disabled	Range: Disabled, Enabled
	⇩	COUNTER 1 NAME: Counter 1	Range: up to 12 alphanumeric characters
	⇩	COUNTER 1 UNITS:	Range: up to six alphanumeric characters
	⇩	COUNTER 1 PRESET: 0	Range: –2,147,483,648 to +2,147,483,647
	⇩	COUNTER 1 COMPARE: 0	Range: –2,147,483,648 to +2,147,483,647
	⇩	COUNTER 1 UP: Off	Range: FlexLogic operand
	⇩	COUNTER 1 DOWN: Off	Range: FlexLogic operand
	⇩	COUNTER 1 BLOCK: Off	Range: FlexLogic operand
	⇩	CNT1 SET TO PRESET: Off	Range: FlexLogic operand
	⇩	COUNTER 1 RESET: Off	Range: FlexLogic operand
	⇩	COUNT1 FREEZE/RESET: Off	Range: FlexLogic operand
	⇧	COUNT1 FREEZE/COUNT: Off	Range: FlexLogic operand

There are eight identical digital counters, numbered from 1 to 8. A digital counter counts the number of state transitions from Logic 0 to Logic 1. The counter is used to count operations such as the pickups of an element, the changes of state of an external contact (for example, breaker auxiliary switch), or pulses from a watt-hour meter.

COUNTER 1 UNITS — Assigns a label to identify the unit of measure pertaining to the digital transitions to be counted. The units label appears in the corresponding actual values status.

COUNTER 1 PRESET — Sets the count to a required preset value before counting operations begin, as in the case where a substitute relay is to be installed in place of an in-service relay, or while the counter is running.

COUNTER 1 COMPARE — Sets the value to which the accumulated count value is compared. Three FlexLogic output operands are provided to indicate if the present value is 'more than (HI)', 'equal to (EQL)', or 'less than (LO)' the set value.

COUNTER 1 UP — Selects the FlexLogic operand for incrementing the counter. If an enabled UP input is received when the accumulated value is at the limit of +2,147,483,647 counts, the counter rolls over to –2,147,483,648.

COUNTER 1 DOWN — Selects the FlexLogic operand for decrementing the counter. If an enabled DOWN input is received when the accumulated value is at the limit of –2,147,483,648 counts, the counter rolls over to +2,147,483,647.

COUNTER 1 BLOCK — Selects the FlexLogic operand for blocking the counting operation. All counter operands are blocked.

CNT1 SET TO PRESET — Selects the FlexLogic operand used to set the count to the preset value. The counter sets to the preset value in the following situations:

- When the counter is enabled and the **CNT1 SET TO PRESET** operand has the value 1 (when the counter is enabled and **CNT1 SET TO PRESET** operand is 0, the counter sets to 0)
- When the counter is running and the **CNT1 SET TO PRESET** operand changes the state from 0 to 1 (**CNT1 SET TO PRESET** changing from 1 to 0 while the counter is running has no effect on the count)
- When a reset or reset/freeze command is sent to the counter and the **CNT1 SET TO PRESET** operand has the value 1 (when a reset or reset/freeze command is sent to the counter and the **CNT1 SET TO PRESET** operand has the value 0, the counter sets to 0)

COUNTER 1 RESET — Selects the FlexLogic operand for setting the count to either "0" or the preset value depending on the state of the **CNT1 SET TO PRESET** operand.

COUNTER 1 FREEZE/RESET — Selects the FlexLogic operand for capturing (freezing) the accumulated count value into a separate register with the date and time of the operation, and resetting the count to "0."

COUNTER 1 FREEZE/COUNT — Selects the FlexLogic operand for capturing (freezing) the accumulated count value into a separate register with the date and time of the operation, and continuing counting. The present accumulated value and captured frozen value with the associated date/time stamp are available as actual values. If control power is interrupted, the accumulated and frozen values are saved into non-volatile memory during the power-down operation.

Figure 5-203: Digital counter logic

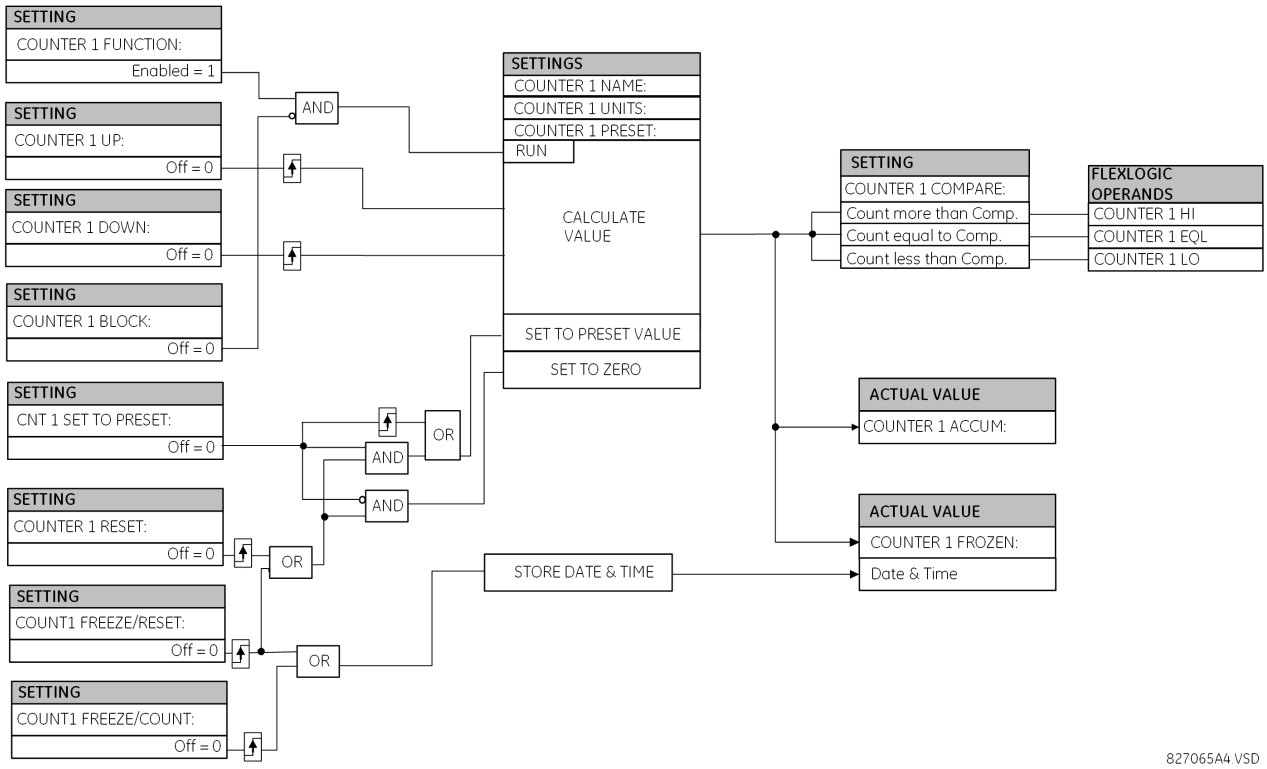

5.8.11 Monitoring elements

5.8.11.1 Menu

SETTINGS ⇨⇩ CONTROL ELEMENTS ⇨⇩ MONITORING ELEMENTS

■ MONITORING ■ ELEMENTS	⇔	■ BREAKER 1 ■ ARCING CURRENT	See below
		⇩	
	⇕	■ BREAKER 4 ■ ARCING CURRENT	
	⇕	■ BREAKER ■ FLASHOVER 1	See page 5-359
	⇕	■ BREAKER ■ FLASHOVER 2	
	⇕	■ BREAKER RESTRIKE 1 ■	See page 5-364
		⇩	
	⇕	■ BREAKER RESTRIKE 2 ■	
	⇕	■ CONTINUOUS MONITOR ■	See page 5-366
	⇕	■ CT FAILURE ■ DETECTOR 1	See page 5-367
		⇩	

⇕	■ CT FAILURE ■ DETECTOR 4	
⇕	■ VT FUSE FAILURE 1 ■	See page 5-369
	⇩	
⇕	■ VT FUSE FAILURE 4 ■	
⇕	■ OPEN POLE ■	See page 5-370
⇕	■ THERMAL OVERLOAD ■ PROTECTION	See page 5-373
⇧	■ BROKEN CONDUCTOR ■	See page 5-376

5.8.11.2 Breaker arcing current

SETTINGS ⇨⇩ CONTROL ELEMENTS ⇨⇩ MONITORING ELEMENTS ⇨ BREAKER 1(4) ARCING CURRENT

■ BREAKER 1 ■ ARCING CURRENT	⇔	BKR 1 ARC AMP FUNCTION: Disabled	Range: Disabled, Enabled
	⇕	BKR 1 ARC AMP SOURCE: SRC 1	Range: SRC 1, SRC 2, SRC 3, SRC 4
	⇕	BKR 1 ARC AMP INT-A: Off	Range: FlexLogic operand
		⇩	
	⇕	BKR 1 ARC AMP INT-C: Off	Range: FlexLogic operand
	⇕	BKR 1 ARC AMP DELAY: 0.000 s	Range: 0.000 to 65.535 s in steps of 0.001
	⇕	BKR 1 ARC AMP LIMIT: 1000 kA2-cyc	Range: 0 to 50000 kA^2-cycle in steps of 1
	⇕	BKR 1 INTERRUPTION RATING: 31.5 kA	Range: 0.0 to 100.0 kA in steps of 0.1
	⇕	BKR 1 CLR ARC AMPS: Off	Range: FlexLogic operand
	⇕	BKR 1 ARC AMP BLOCK: Off	Range: FlexLogic operand
	⇕	BKR 1 ARC AMP TARGET: Self-reset	Range: Self-reset, Latched, Disabled
	⇧	BKR 1 ARC AMP EVENTS: Disabled	Range: Disabled, Enabled

There is one breaker arcing current element available per CT bank, with a minimum of two elements. This element calculates an estimate of the per-phase wear on the breaker contacts by measuring and integrating the current squared passing through the breaker contacts as an arc. These per-phase values are added to accumulated totals for each phase and compared to a programmed threshold value. When the threshold is exceeded in any phase, the relay can set an output operand to "1." The accumulated value for each phase can be displayed as an actual value.

The operation of the scheme is shown in the following logic diagram. The same output operand that is selected to operate the output relay used to trip the breaker, indicating a tripping sequence has begun, is used to initiate this feature. A time delay is introduced between initiation and the starting of integration to prevent integration of current flow through the breaker before the contacts have parted. This interval includes the operating time of the output relay, any other auxiliary

relays, and the breaker mechanism. For maximum measurement accuracy, measure the interval between change-of-state of the operand (from 0 to 1) and contact separation for the specific installation. Integration of the measured current continues for 100 ms, which is expected to include the total arcing period.

The feature is programmed to perform fault duration calculations. Fault duration is defined as a time between operation of the disturbance detector occurring before initiation of this feature, and reset of an internal low-set overcurrent function. Correction is implemented to account for a non-zero reset time of the overcurrent function.

Breaker arcing currents and fault duration values are available under the **ACTUAL VALUES ⇨⇩ RECORDS ⇨⇩ MAINTENANCE ⇨ BREAKER 1(4)** menus.

BKR 1 ARC AMP INT-A(C) — Select the same output operands that are configured to operate the output relays used to trip the breaker. In three-pole tripping applications, configure the same operand to initiate arcing current calculations for poles A, B, and C of the breaker. In single-pole tripping applications, configure per-pole tripping operands to initiate the calculations for the poles that are actually tripped.

BKR 1 ARC AMP DELAY — This setting is used to program the delay interval between the time the tripping sequence is initiated and the time the breaker contacts are expected to part, starting the integration of the measured current.

BKR 1 ARC AMP LIMIT — Selects the threshold value above which the output operand is set.

BKR 1 CLR ARC AMPS — Selects a FlexLogic Operand to clear the accumulated I^2t values (kA^2-cycle), reset fault duration items (breaker operating time), clear ARCING AMPS (kA^2-cycle) and AMP MAX (kA) values of the last event.

BKR 1 INTERUPTION RATING — This setting specifies the maximum symmetrical interruption rating of the circuit breaker.

Figure 5-204: Arcing current measurement

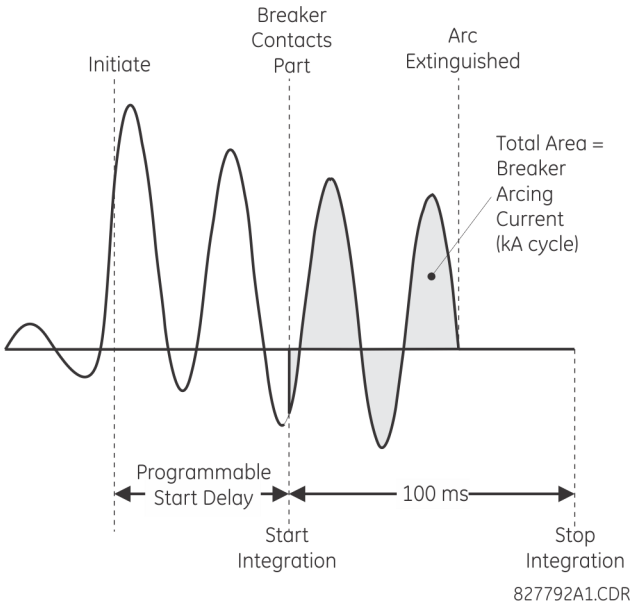

Figure 5-205: Breaker arcing current logic

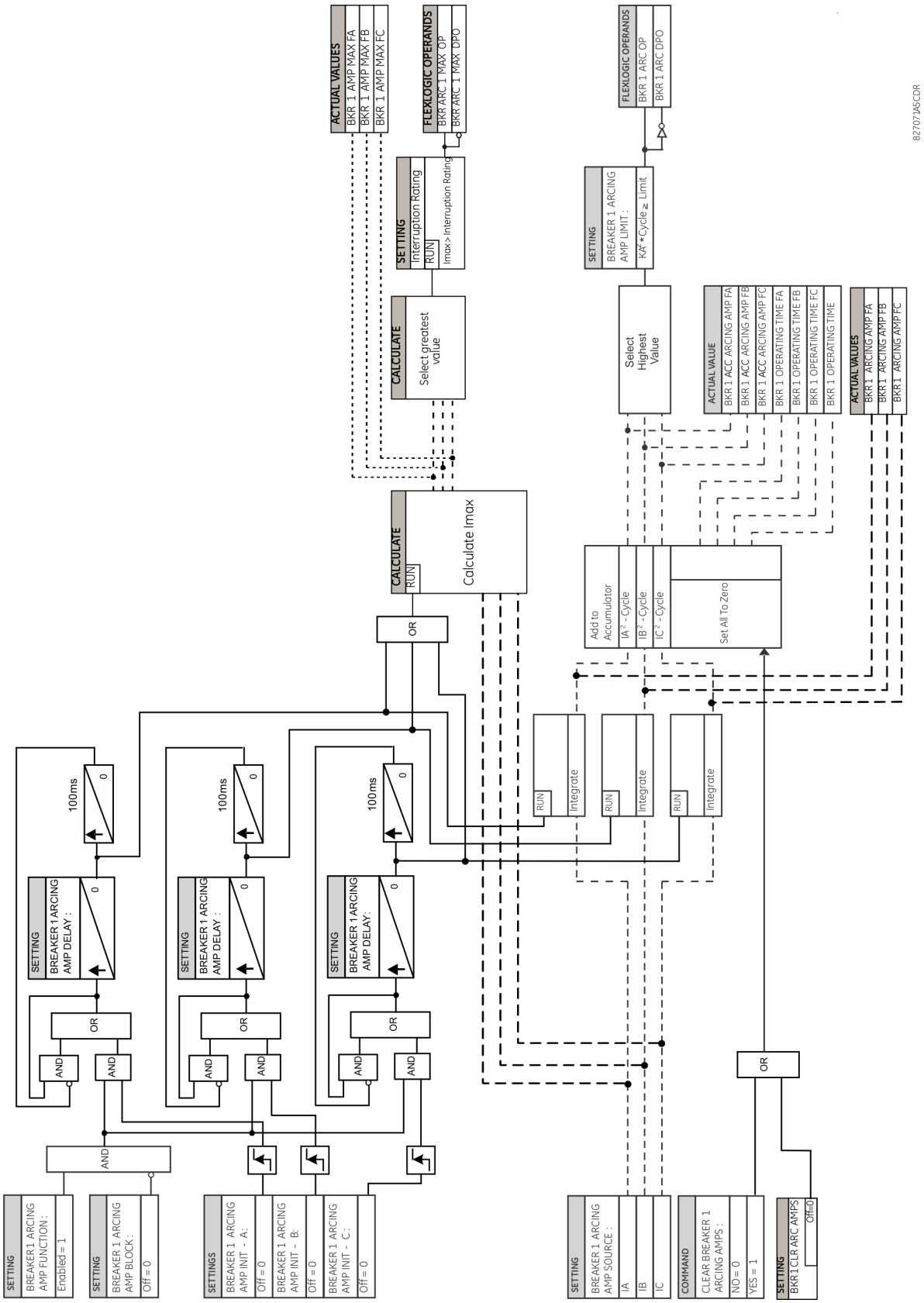

5.8.11.3 Breaker flashover

SETTINGS ⇨⇩ CONTROL ELEMENTS ⇨⇩ MONITORING ELEMENTS ⇨⇩ BREAKER FLASHOVER 1(2)

■ BREAKER ■ FLASHOVER 1	⇔	BRK 1 FLSHOVR FUNCTION: Disabled	Range: Disabled, Enabled
	⇩	BRK 1 FLSHOVR SIDE 1 SRC: SRC 1	Range: SRC 1, SRC 2, SRC 3, SRC 4
	⇩	BRK 1 FLSHOVR SIDE 2 SRC: None	Range: None, SRC 1, SRC 2, SRC 3, SRC 4
	⇩	BRK 1 STATUS CLSD A: Off	Range: FlexLogic operand
	⇩	BRK 1 STATUS CLSD C: Off	Range: FlexLogic operand
	⇩	BRK 1 FLSHOVR V PKP: 0.850 pu	Range: 0.004 to 1.500 pu in steps of 0.001
	⇩	BRK 1 FLSHOVR DIFF V PKP: 1000 V	Range: 0 to 100000 V in steps of 1
	⇩	BRK 1 FLSHOVR AMP PKP: 0.600 pu	Range: 0.020 to 1.500 pu in steps of 0.001
	⇩	BRK 1 FLSHOVR PKP DELAY: 0.100 s	Range: 0.000 to 65.535 s in steps of 0.001
	⇩	BRK 1 FLSHOVR SPV A: Off	Range: FlexLogic operand
	⇩	BRK 1 FLSHOVR SPV C: Off	Range: FlexLogic operand
	⇩	BRK 1 FLSHOVR BLOCK: Off	Range: FlexLogic operand
	⇩	BRK 1 FLSHOVR TARGET: Self-reset	Range: Self-reset, Latched, Disabled
	⇩	BRK 1 FLSHOVR EVENTS: Disabled	Range: Disabled, Enabled

The detection of the breaker flashover is based on the following conditions:

- Breaker open,
- When phase voltage measured from either side of the breaker is greater than the setting,
- Measured current through the breaker is greater than the pickup setting, and
- Voltage difference across the breaker drops below the pickup setting (only applicable to six VTs application)

Furthermore, the scheme is applicable for cases where one or two sets of three-phase voltages are available across the breaker, as follows:

- One set of three-phase voltages is available across the breaker (three VTs application)
- Two sets of three-phase voltages are available across the breaker (six VTs application)

Three VT breaker flashover application

When only one set of VTs is available across the breaker, set the **BRK 1 FLSHOVR SIDE 2 SRC** setting to "None."

NOTE

Voltages must be present prior to flashover conditions. If the three VTs are placed after the breaker on the line (or feeder), and the downstream breaker is open, the measured voltage is zero and the flashover element is not initiated.

The flashover detection resets if the current drops below **BRK 1 FLSHOVR AMP PKP**, the breaker closes, or the FlexLogic operand selected by **BRK 1 FLSHOVR SPV A** changes to high. It is recommended to use the supervision **BRK 1 FLSHOVR SPV A** setting, and select a trip operand that does not allow the flashover element to pick up prior to the trip.

The flashover detection can be used for external alarm, re-tripping the breaker, or energizing the lockout relay.

Consider the following configuration:

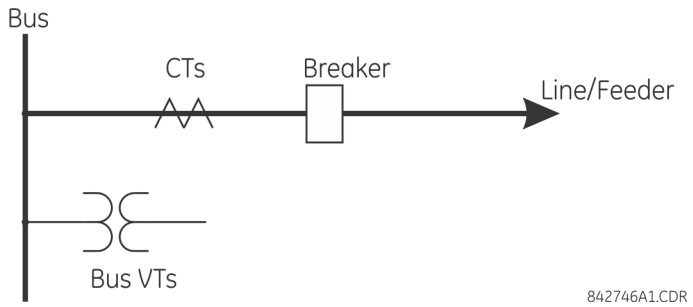

The source 1 (SRC1) phase currents are feeder CTs and phase voltages are bus VTs, and Contact Input 1 is set as Breaker 52a contact. The conditions prior to flashover detection are:

- 52a status = 0
- VAg is greater than the **BRK 1 FLSHOVR V PKP** setting
- IA is below **BRK 1 FLSHOVR AMP PKP** (ideally, IA = 0)

The conditions at flashover detection are:

- 52a status = 0
- VAg is greater or lesser than the **BRK 1 FLSHOVR V PKP** setting
- IA is greater than the **BRK 1 FLSHOVR AMP PKP** setting

Six VT breaker flashover application

In a six-VT application, the VTs located on both sides of a breaker are available. When the breaker is open, the voltage difference across the breaker is the rated voltage if the line is not energized from the remote end, or it can be two times the rated voltage at the time of synchronization if the line is energized from the remote. At the occurrence of breaker flashover, the voltage difference across breaker drops and current greater than **BRK 1 FLSHOVR AMP PKP** starts flowing through the breaker. These conditions are also true for a normal closed operation of a breaker where the voltage difference across breaker is practically zero and load current flows through the breaker. To distinguish between breaker flashover and normal closed operation of breaker, the Breaker Status is utilized.

In a six-VT configuration, if the voltages from VTs located on one of the sides of breaker disappear due to VT fuse failure or other reason, a three-VT configuration can provide the breaker flashover detection. If however, the blocking of breaker flashover detection is wanted under voltage loss on one side condition, then it can be done by applying the appropriate FlexLogic operand to the **BRK FLSHOVR BLOCK** setting.

Consider the following configuration:

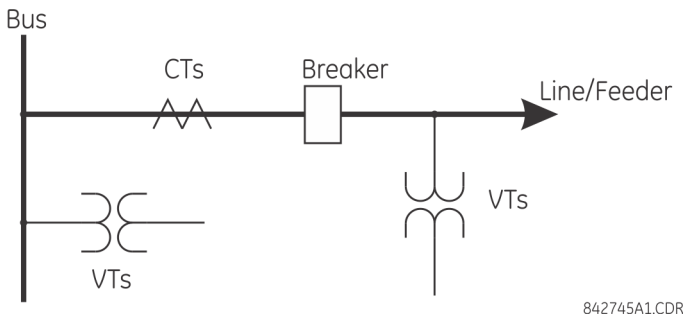

The source 1 (SRC1) phase currents are CTs and phase voltages are bus VTs. The source 2 (SRC2) phase voltages are line VTs. Contact input 1 is set as the breaker 52a contact (optional).

The conditions prior to flashover detection are:

- 52a status = 0
- VAg or Vag greater than the **BRK 1 FLSHOVR V PKP** setting
- IA is below **BRK 1 FLSHOVR AMP PKP** (ideally, IA = 0)
- ΔVA is greater than the **BRK 1 FLSHOVR DIFF V PKP** setting

The conditions at flashover detection are:

- 52a status = 0
- VAg or Vag greater or lesser than the **BRK 1 FLSHOVR V PKP** setting
- IA is greater than the **BRK 1 FLSHOVR AMP PKP** setting
- ΔVA is less than the **BRK 1 FLSHOVR DIFF V PKP** setting

NOTE

The element operates only when phase-to-ground voltages are connected to relay terminals. The flashover element does not operate if delta voltages are applied.

Settings

BRK 1 FLSHOVR SIDE 1 SRC — This setting specifies a signal source used to provide three-phase voltages and three-phase currents from one side of the current breaker. The source selected as a setting and must be configured with breaker phase voltages and currents, even if only three VTs are available across the breaker.

BRK 1 FLSHOVR SIDE 2 SRC — This setting specifies a signal source used to provide another set of three phase voltages whenever six VTs are available across the breaker. For a three-VT application, set this setting to "None."

BRK 1 STATUS CLSD A to **BRK 1 STATUS CLSD C** — These settings specify FlexLogic operands to indicate the closed status of the breaker. A separate FlexLogic operand can be selected to detect individual breaker pole status and provide flashover detection. The recommended setting is 52a breaker contact or another operand defining the breaker poles closed status.

NOTE

Leaving this setting off, meaning not configuring any FlexLogic to indicated Closed Breaker leads to maloperation of the element.

BRK 1 FLSHOVR V PKP — This setting specifies a pickup level for the phase voltages from one or both sides of the breaker. If six VTs are available, opening the breaker leads to two possible combinations – live voltages from only one side of the breaker, or live voltages from both sides of the breaker. The detection of voltage above the selected value on either side of the breaker sets the scheme ready for flashover detection. Set **BRK FLSHOVR V PKP** to 85 to 90% of the nominal voltage.

BRK 1 FLSHOVR DIFF V PKP — This setting specifies a pickup level for the phase voltage difference when two VTs per phase are available across the breaker. Set this setting to be lower than the monitored voltage difference that is observed when closed or opened breaker resistors are left in service. The setting is selected as primary volts difference between the sources.

BRK 1 FLSHOVR AMP PKP — This setting specifies the normal load current which can flow through the breaker. Depending on the flashover protection application, the flashover current can vary from levels of the charging current when the line is not loaded to well above the maximum line (feeder) load (line/feeder connected to load).

BRK 1 FLSHOVR SPV A to **BRK 1 FLSHOVR SPV C** — These settings specify FlexLogic operands (per breaker pole) that supervise the operation of the element per phase. Supervision can be provided by operation of other protection elements, breaker failure, and close and trip commands. A six-cycle time delay applies after the selected FlexLogic operand resets.

BRK FLSHOVR PKP DELAY — This setting specifies the time delay to operate after a pickup condition is detected. Do not set it too long else the flashover current can disappear before its detection.

Figure 5-206: Breaker flashover logic

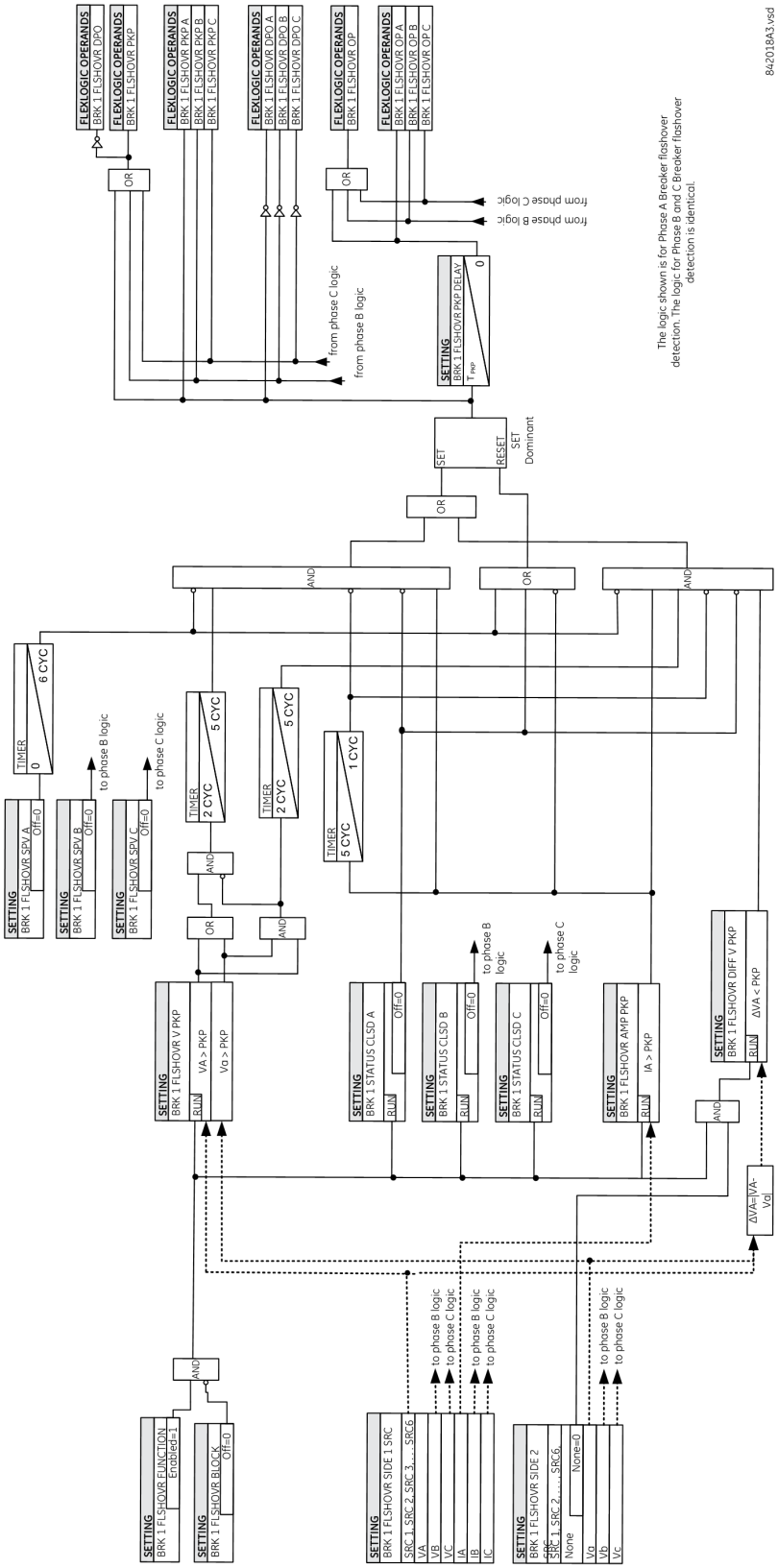

5.8.11.4 Breaker restrike

SETTINGS ⇨⇩ CONTROL ELEMENTS ⇨⇩ MONITORING ELEMENTS ⇨⇩ BREAKER RESTRIKE 1(2)

■ BREAKER RESTRIKE 1 ■	⇔	BREAKER RESTRIKE 1 FUNCTION: Disabled	Range: Disabled, Enabled
	⇩	BRK RESTRIKE 1 BLOCK: Off	Range: FlexLogic operand
	⇩	BREAKER RESTRIKE 1 SOURCE: SRC 1	Range: SRC 1, SRC 2, SRC 3, SRC 4
	⇩	BREAKER RESTRIKE 1 PICKUP: 0.50 pu	Range: 0.10 to 2.00 pu in steps of 0.01
	⇩	BREAKER RESTRIKE 1 RST DELAY: 0.100 s	Range: 0.000 to 65.535 s in steps of 0.001
	⇩	BREAKER RESTRIKE 1 HF DETECT: Enabled	Range: Disabled, Enabled
	⇩	BRK RSTR 1 BRK OPEN: Off	Range: FlexLogic operand
	⇩	BRK RSTR 1 OPEN CMD: Off	Range: FlexLogic operand
	⇩	BRK RSTR 1 CLS CMD: Off	Range: FlexLogic operand
	⇩	BREAKER RESTRIKE 1 TARGET: Self-reset	Range: Self-reset, Latched, Disabled
	⇧	BREAKER RESTRIKE 1 EVENTS: Disabled	Range: Disabled, Enabled

5

One breaker restrike element is provided for each DSP in the L90.

According to IEEE standard C37.100 entitled IEEE Standard Definitions for Power Switchgear, restrike is defined as "a resumption of current between the contacts of a switching device during an opening operation after an interval of zero current of ¼ cycle at normal frequency or longer."

Figure 5-207: Typical restrike waveform and detection flag

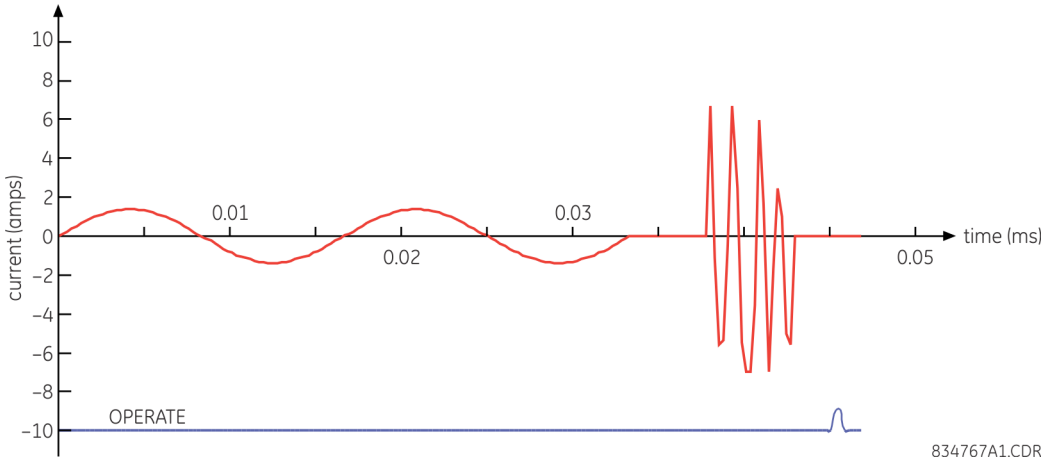

The breaker restrike algorithm responds to a successful interruption of the phase current following a declaration of capacitor bank offline as per the breaker pole indication. If a high-frequency or system frequency current with a magnitude greater than the threshold is resumed at least ¼ of a cycle later than the phase current interruption, then a

breaker restrike condition is declared in the corresponding phase and the BRK RESTRIKE 1 OP operand asserts for a short period of time. The user can add counters and other logic to facilitate the decision making process as to the appropriate actions upon detecting a single restrike or a series of consecutive restrikes.

A restrike event (FlexLogic operand) is declared if all of the following hold:

- The current is initially interrupted
- The breaker status is open
- An elevated high frequency current condition occurs (if the **BREAKER RESTRIKE 1 HF DETECT** setting is Enabled, otherwise the condition is bypassed), and
- The current subsequently drops out again

The algorithm is illustrated in the following state machine diagram.

Figure 5-208: Algorithm illustration of state machine to detect restrike

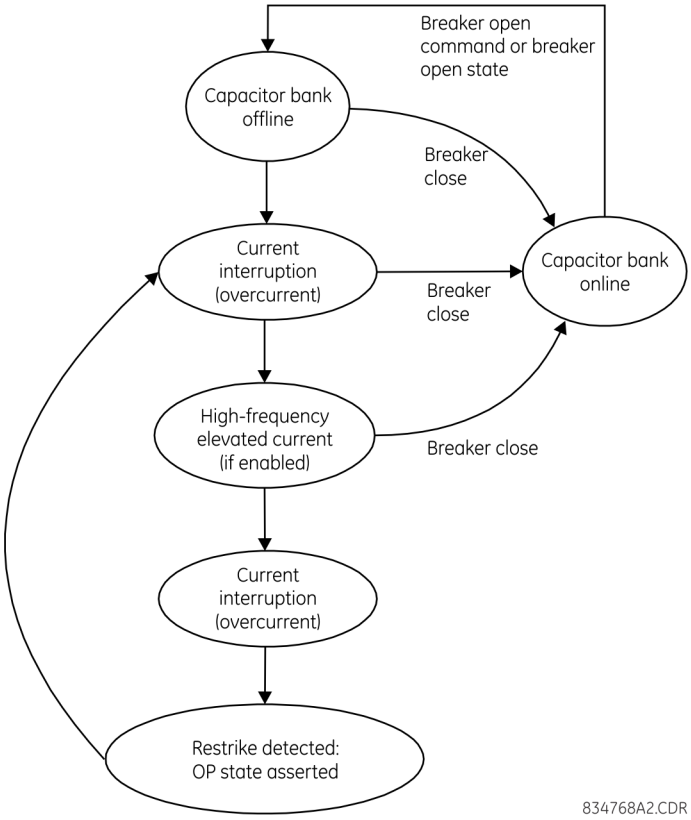

In this way, a distinction is made between a self-extinguishing restrike and permanent breaker failure condition. The latter can be detected by the breaker failure function or a regular instantaneous overcurrent element. Also, a fast succession of restrikes is picked up by breaker failure or instantaneous overcurrent protection.

The following settings are available for each element.

BREAKER RESTRIKE 1 FUNCTION — Enables and disables operation of the breaker restrike detection element.

BRK RESTRIKE 1 BLOCK — Blocks operation of the breaker restrike detection element.

BREAKER RESTRIKE 1 SOURCE — Selects the source of the current for this element. This source must have a valid CT bank assigned.

BREAKER RESTRIKE 1 PICKUP — Specifies the pickup level of the overcurrent detector in per-unit values of CT nominal current.

BREAKER RESTRIKE 1 RST DELAY — Specifies the reset delay for this element. When set to "0 ms," then FlexLogic operand is picked up for only 1/8th of the power cycle.

BREAKER RESTRIKE 1 HF DETECT — Enables/disables high-frequency (HF) pattern detection when breaker restrike occurs. High-frequency pattern is typical for capacitor bank, cables, and long transmission lines applications.

BRK RSTR 1 BRK OPEN — Assigns a FlexLogic operand indicating the open position of the breaker. It must be logic "1" when the breaker is open. It is important to assign either 52 contact with this setting or breaker close command with **BRK RSTR 1 CLS CMD** setting to give clear indication to the relay about breaker status.

BRK RSTR 1 OPEN CMD — Assigns a FlexLogic operand indicating a breaker open command. It must be logic "1" when the breaker is opened, either manually or from protection logic.

BRK RSTR 1 CLS CMD — Assigns a FlexLogic operand indicating a breaker close command. It must be logic "1" when the breaker is closed.

Figure 5-209: Breaker restrike logic

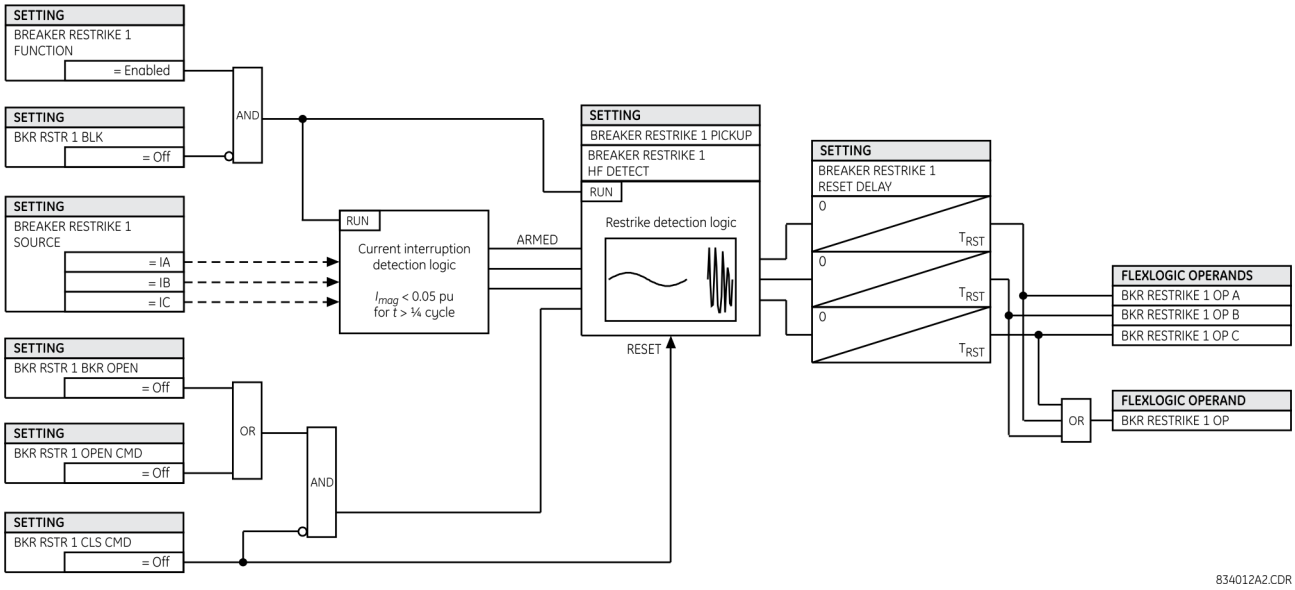

5.8.11.5 Continuous monitor

SETTINGS ⇨⇩ CONTROL ELEMENTS ⇨⇩ MONITORING ELEMENTS ⇨⇩ CONTINUOUS MONITOR

■ **CONTINOUS MONITOR** ■	⇔	**CONT MONITOR FUNCTION: Disabled**	Range: Disabled, Enabled
	⇩	**CONT MONITOR I-OP: Off**	Range: FlexLogic operand Any Current Element(s) OP
	⇩	**CONT MONITOR I-SUPV: Off**	Range: FlexLogic operand. To supervise current logic, use 50DD OP.
	⇩	**CONT MONITOR V-OP: Off**	Range: FlexLogic operand Any Voltage Element(s) OP
	⇩	**CONT MONITOR V-SUPV: Off**	Range: FlexLogic operand. To supervise voltage logic, use VT FUSE FAIL OP.
	⇩	**CONT MONITOR TARGET: Self-reset**	Range: Self-reset, Latched, Disabled
	⇩	**CONT MONITOR EVENTS: Disabled**	Range: Disabled, Enabled

The continuous monitor logic is used to detect the operation of any tripping element that has operated under normal load conditions; that is, when the disturbance detector has not operated. Because all tripping is supervised by the disturbance detector function, no trip is issued under these conditions. This can occur when an element is incorrectly set so that it can misoperate under load. The continuous monitor can detect this state and issue an alarm and/or block the tripping of the relay.

Figure 5-210: Continuous monitor logic

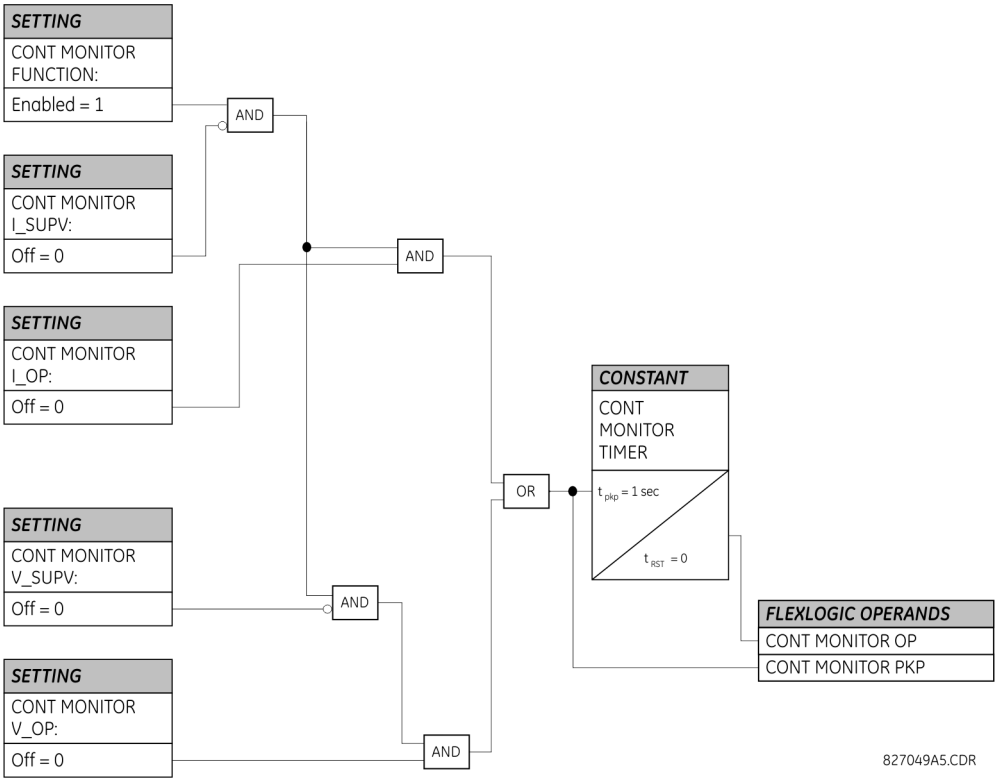

5.8.11.6 CT failure detector

SETTINGS ⇨⇩ CONTROL ELEMENTS ⇨⇩ MONITORING ELEMENTS ⇨⇩ CT FAILURE DETECTOR 1(2 or 4)

■ CT FAILURE ■ DETECTOR 1	⇔	**CT FAIL 1 FUNCTION: Disabled**	Range: Disabled, Enabled
	⇩	**CT FAIL 1 BLOCK: Off**	Range: FlexLogic operand
	⇩	**CT FAIL 1 3I0 INP 1: SRC 1**	Range: SRC 1, SRC 2, SRC 3, SRC 4
	⇩	**CT FAIL 1 3I0 INP 1 PKP: 0.2 pu**	Range: 0.1 to 2.0 pu in steps of 0.1
	⇩	**CT FAIL 1 3I0 INP 2: SRC 2**	Range: SRC 1, SRC 2, SRC 3, SRC 4
	⇩	**CT FAIL 1 3I0 INP 2 PKP: 0.2 pu**	Range: 0.1 to 2.0 pu in steps of 0.1
	⇩	**CT FAIL 1 3V0 INPUT: SRC 1**	Range: SRC 1, SRC 2, SRC 3, SRC 4
	⇩	**CT FAIL 1 3V0 INPUT PKP: 0.20 pu**	Range: 0.04 to 2.00 pu in steps of 0.01

⇕	**CT FAIL 1 PICKUP DELAY: 1.000 s**	Range: 0.000 to 65.535 s in steps of 0.001
⇕	**CT FAIL 1 TARGET: Self-reset**	Range: Self-reset, Latched, Disabled
⇧	**CT FAIL 1 EVENTS: Disabled**	Range: Disabled, Enabled

The CT failure function detects problems with system current transformers used to supply current to the relay. This logic detects the presence of a zero-sequence current at the supervised source of current without a simultaneous zero-sequence current at another source, zero-sequence voltage, or some protection element condition.

The CT failure logic (see later) is based on the presence of the zero-sequence current in the supervised CT source and the absence of one of three or all of the three following conditions:

- Zero-sequence current at different source current (can be different set of CTs or different CT core of the same CT)
- Zero-sequence voltage at the assigned source
- Appropriate protection element or remote signal

Settings are described as follows. There are four CT FAIL functions with the breaker and half software option and two without.

CT FAIL 1 FUNCTION — Enables or disables operation of the CT failure element.

CT FAIL 1 BLOCK — Selects a FlexLogic operand to block operation of the element during some condition (for example, an open pole in process of the single pole tripping-reclosing). Local signals or remote signals representing operation of some remote current protection elements via communication channels can also be chosen.

CT FAIL 1 3I0 INPUT 1 — Selects the current source for input 1. The most critical protection element should also be assigned to the same source.

CT FAIL 1 3I0 INPUT 1 PICKUP — Selects the 3I_0 pickup value for input 1 (the main supervised CT source).

CT FAIL 1 3I0 INPUT 2 — Selects the current source for input 2. Input 2 should use a different set of CTs or a different CT core of the same CT. If 3I_0 does not exist at source 2, then a CT failure is declared.

CT FAIL 1 3I0 INPUT 2 PICKUP — Selects the 3I_0 pickup value for input 2 (different CT input) of the relay.

CT FAIL 1 3V0 INPUT — Selects the voltage source.

CT FAIL 1 3V0 INPUT PICKUP — Specifies the pickup value for the 3V_0 source.

CT FAIL 1 PICKUP DELAY — Specifies the pickup delay of the CT failure element.

Figure 5-211: CT failure detector logic

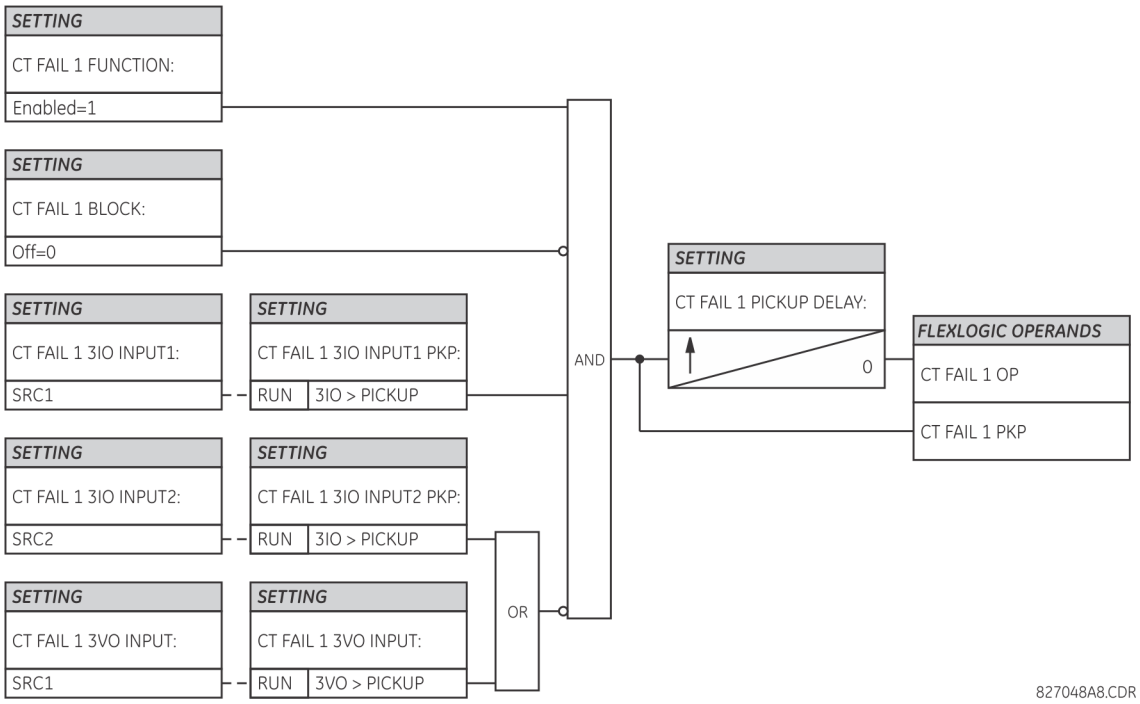

5.8.11.7 VT fuse failure

SETTINGS ⇨⇩ CONTROL ELEMENTS ⇨⇩ MONITORING ELEMENTS ⇨⇩ VT FUSE FAILURE 1(4)

■ **VT FUSE FAILURE 1** ■	⇔	**VT FUSE FAILURE 1 FUNCTION: Disabled**	Range: Disabled, Enabled
	⇩	**VT FUSE FAILURE 1 ALARM DELAY: 1.000 s**	Range: 0.000 to 65.535 s in steps of 0.001
	⇩	**NEUTRAL WIRE OPEN 1 DETECTION: Disabled**	Range: Disabled, Enabled
	⇩	**NEUTRAL WIRE OPEN 1 3 HARM PKP: 0.100 pu**	Range: 0.004 to 3.000 pu in steps of 0.001

Every signal source includes a fuse failure scheme. A signal source must have a three-phase VT bank and a three-phase CT bank assigned to it, in order for the fuse failure scheme to operate.

The VT fuse failure detector is used to raise an alarm and/or block elements that operate incorrectly for a full or partial loss of AC potential caused by one or more blown fuses. Some elements that can be blocked (via the BLOCK input) are distance, voltage restrained overcurrent, and directional current.

There are two classes of fuse failure that occur:

- Class A — Loss of one or two phases
- Class B — Loss of all three phases

Different means of detection are required for each class. An indication of class A failures is a significant level of negative-sequence voltage, whereas an indication of class B failures is when positive sequence current is present and there is an insignificant amount of positive sequence voltage. Also, a rapid decrease in the phase voltages magnitude from a healthy voltage level without disturbance in current can indicate VT fuse fail conditions. These noted indications of fuse failure can also be present when faults are present on the system, so a means of detecting faults and inhibiting fuse failure declarations during these events is provided.

Once the fuse failure condition is declared, it is sealed-in until the cause that generated it disappears.

An additional condition is introduced to inhibit a fuse failure declaration when the monitored circuit is de-energized; positive-sequence voltage and current are both below threshold levels.

VT FUSE FAILURE 1 FUNCTION — Enables and disables the fuse failure feature for Source 1 VT Fuse Fail.

NEUTRAL WIRE OPEN 1 DETECTION — Enables and disables the VT neutral wire open detection function. When the VT is connected in Delta, do not enable this function because there is no neutral wire for Delta connected VT.

NEUTRAL WIRE OPEN 1 3 HRAM PKP — Specifies the pickup level of 3rd harmonic of 3V0 signal for the **NEUTRAL WIRE OPEN DETECTION** logic to pick up.

Base voltage for this element is **PHASE VT SECONDARY** setting in the case of WYE VTs and (**PHASE VT SECONDARY**)/ $\sqrt{3}$ in case of DELTA VTs. The setting is found under **SETTINGS ⇨⇩ SYSTEM SETUP ⇨ AC INPUTS ⇨⇩ VOLTAGE BANK ⇨ PHASE VT SECONDARY**.

Figure 5-212: VT fuse fail logic

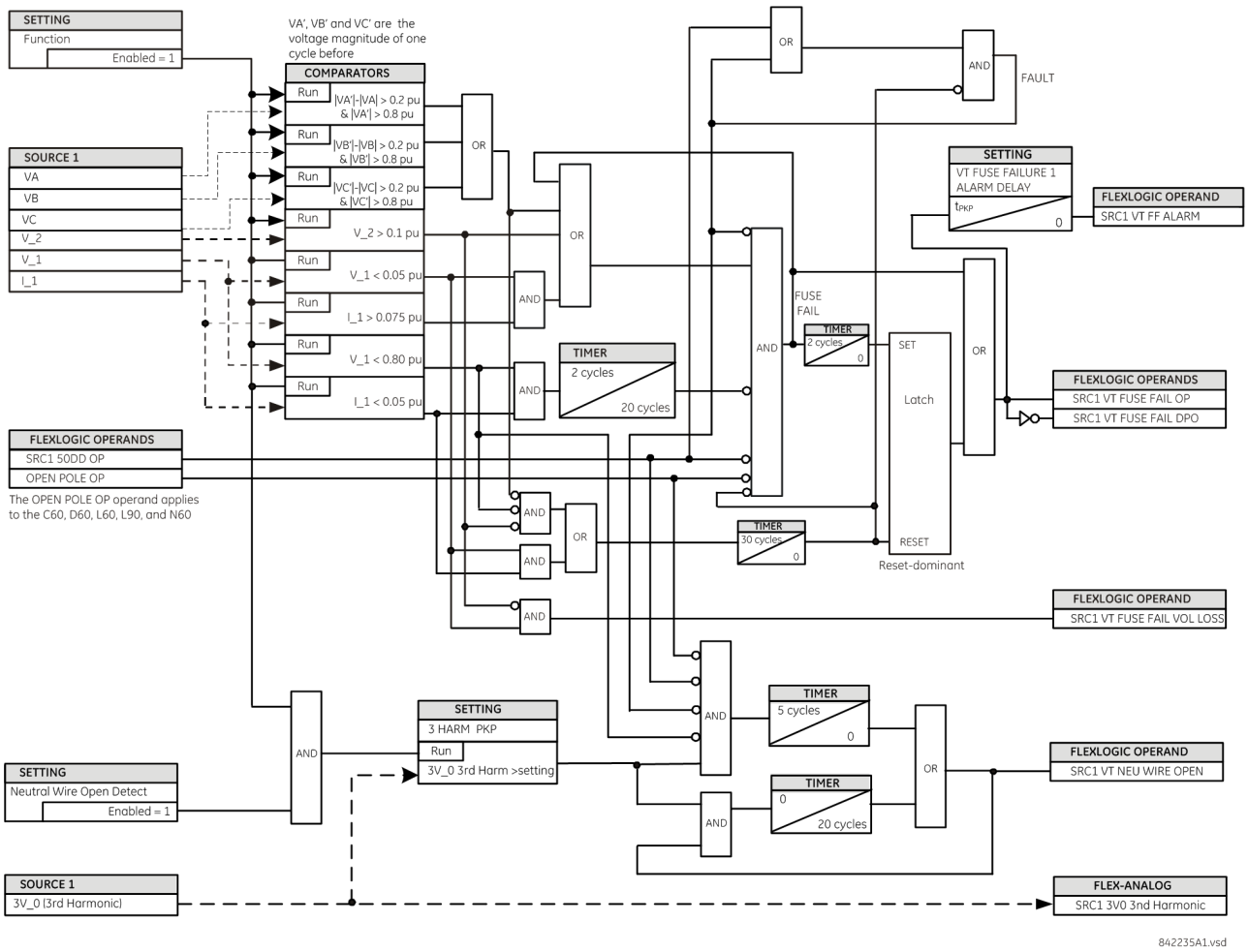

5.8.11.8 Open pole detector

SETTINGS ⇨⇩ CONTROL ELEMENTS ⇨⇩ MONITORING ELEMENTS ⇨⇩ OPEN POLE

■ **OPEN POLE** ■	⇔	**OPEN POLE FUNCTION: Disabled**	Range: Disabled, Enabled
	⇩	**OPEN POLE BLOCK: Off**	Range: FlexLogic operand
	⇩	**OPEN POLE VOLTAGE SUPV: Disabled**	Range: Disabled, Enabled

⇳	**OPEN POLE CURRENT PKP: 0.050 pu**	Range: 0.020 to 30.000 pu in steps of 0.001
⇳	**OPEN POLE LINE XC1: 9999.9 Ω**	Range: 300.0 to 9999.9 ohms in steps of 0.001
⇳	**OPEN POLE LINE XC0: 9999.9 Ω**	Range: 300.0 to 9999.9 ohms in steps of 0.001
⇳	**OPEN POLE REM CURR PKP: 0.050 pu**	Range: 0.020 to 30.000 pu in steps of 0.001
⇳	**OPEN POLE MODE: Accelerated**	Range: Accelerated, Traditional
⇳	**OPEN POLE DETECTION: I AND V AND CBaux**	Range: I AND V AND CBaux, I AND V only
⇳	**OPEN POLE TARGET: Self-reset**	Range: Self-reset, Latched, Disabled
⇧	**OPEN POLE EVENTS: Disabled**	Range: Enabled, Disabled

The open pole detector is intended to identify an open pole of the line circuit breaker. The scheme monitors the breakers auxiliary contacts, current in the circuit, and optionally voltage on the line. The scheme generates output operands used to block the phase selector and some specific protection elements, thus preventing maloperation during the dead time of a single-pole autoreclose cycle or any other open pole conditions.

The scheme declares an open pole at the moment a single-pole trip is issued.

In two-breaker and breaker-and-a-half applications, an open pole condition is declared when one or more of the following hold:

- Both breakers have an open pole on the same phase
- The current on the line drops below a threshold
- The current and voltage on the line drop below a threshold

The open pole feature uses signals defined by the **GROUPED ELEMENTS ⇨ SETTING GROUP 1(6) ⇨⇩ DISTANCE ⇨ DISTANCE SOURCE** setting. Voltage supervision can be used only with wye VTs on the line side of the breaker.

OPEN POLE CURRENT PICKUP — This setting establishes the current threshold below which an open pole is declared.

OPEN POLE LINE XC1 — Specifies positive-sequence reactance of the entire line. If shunt reactors are applied, this value is a net capacitive reactance of the line and the reactors installed between the line breakers. The value is entered in secondary ohms. This setting is relevant if open pole condition at the remote end of the line is to be sensed and utilized by the relay.

OPEN POLE LINE XC0 — Specifies zero-sequence reactance of the entire line. If shunt reactors are applied, this value is a net capacitive reactance of the line and the reactors installed between the line breakers. Do not enter the value in secondary ohms. This setting is relevant if open pole condition at the remote end of the line is to be sensed and utilized by the relay (OPEN POLE REM OP FlexLogic operand).

OPEN POLE REM CURR PKP — Specifies pickup level for the remote-end current estimated by the relay as the local current compensated by the calculated charging current. The latter is calculated based on the local voltages and the capacitive reactances of the line. This setting is relevant if open pole condition at the remote end of the line is to be sensed and utilized by the relay (OPEN POLE REM OP FlexLogic operand).

OPEN POLE MODE — Selects the mode of operation of the open pole function. When the "Accelerated" mode is chosen, an open pole is declared ½ cycle after trip output operation and before the breaker pole opens. This blocks distance loops involved in the faulted phase and phase selector, and arms the trip output to produce three-pole trip for the next fault. If the fault evolves into multi-phase fault before breaker pole opens for the first fault, the remaining in-service distance loops initiates a three-pole trip. When the "Traditional" mode is selected, then an open pole is declared only after the breaker opens and current disappears. If the fault evolves into a multi-phase fault before the circuit breaker pole opens for the first fault, the phase selector changes the fault type from a single-line-to-ground fault to a multi-phase fault, thereby initiating a three-pole trip.

OPEN POLE DETECTION — Selects the signals used to detect an open pole condition. When "I AND V AND CBaux" value is selected, the breaker 52 contacts and the current with optional voltage signals are used to determine open pole conditions. For the "I AND V only" selection, only the current with optional voltage signals are used.

For convenience, the position of the breaker poles defined in the breaker control feature and available as FlexLogic operand BREAKER 1ΦA CLSD through BREAKER 1 ΦC CLSD and BREAKER 1 OOS are used by the open pole feature if the "I AND V AND CBaux" detection value is selected.

For correct operation of the open pole detector, the breaker control, trip output, and single-pole autoreclose features must be enabled and configured properly. When used in configuration with only one breaker, set the **BREAKER 2 FUNCTION** to "Enabled" and the **BREAKER 2 OUT OF SV** setting to "On" (see the Breaker Control section earlier in this chapter for details).

Figure 5-213: Open pole detector logic (Sheet 1 of 2)

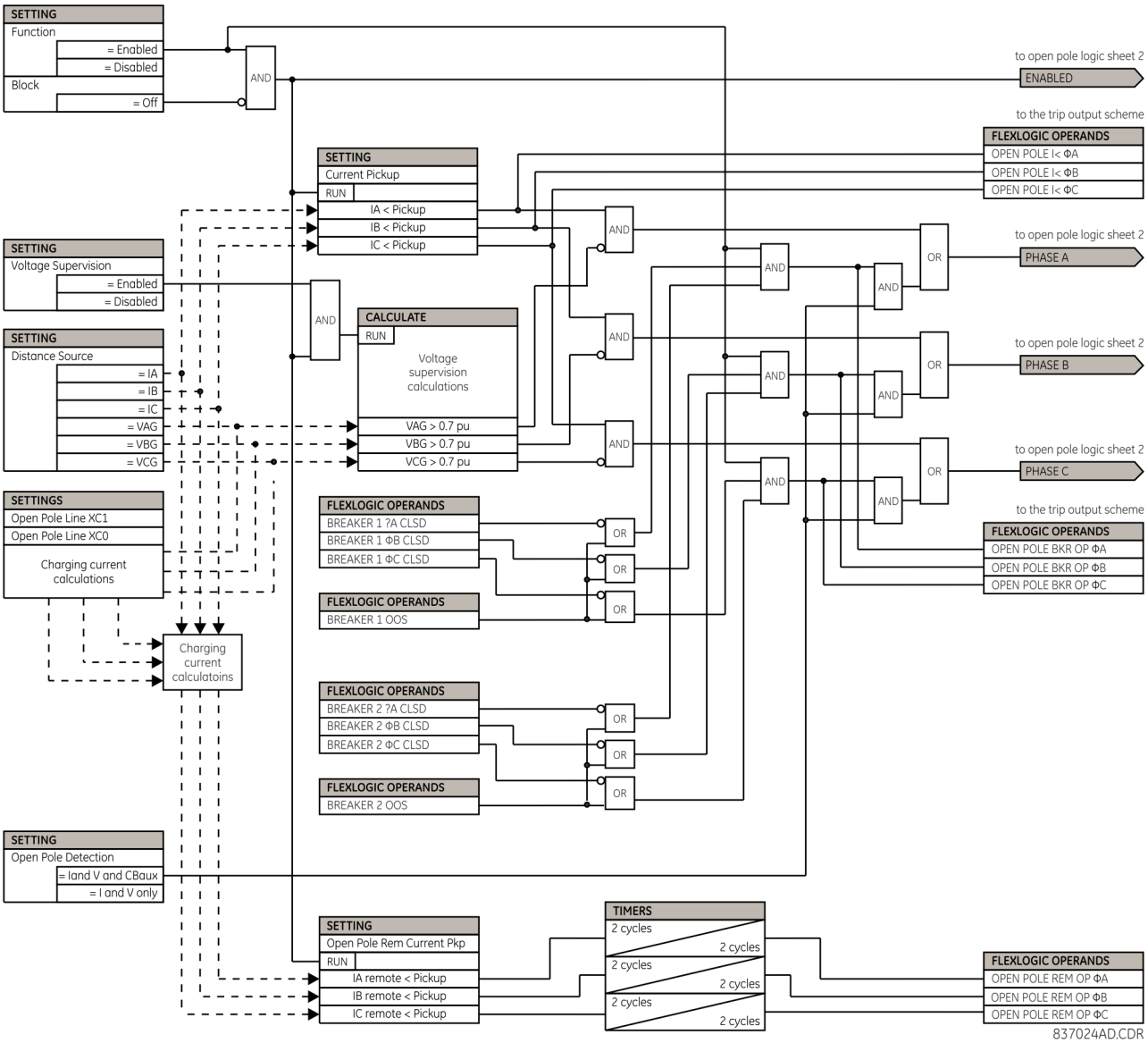

Figure 5-214: Open pole detector logic (Sheet 2 of 2)

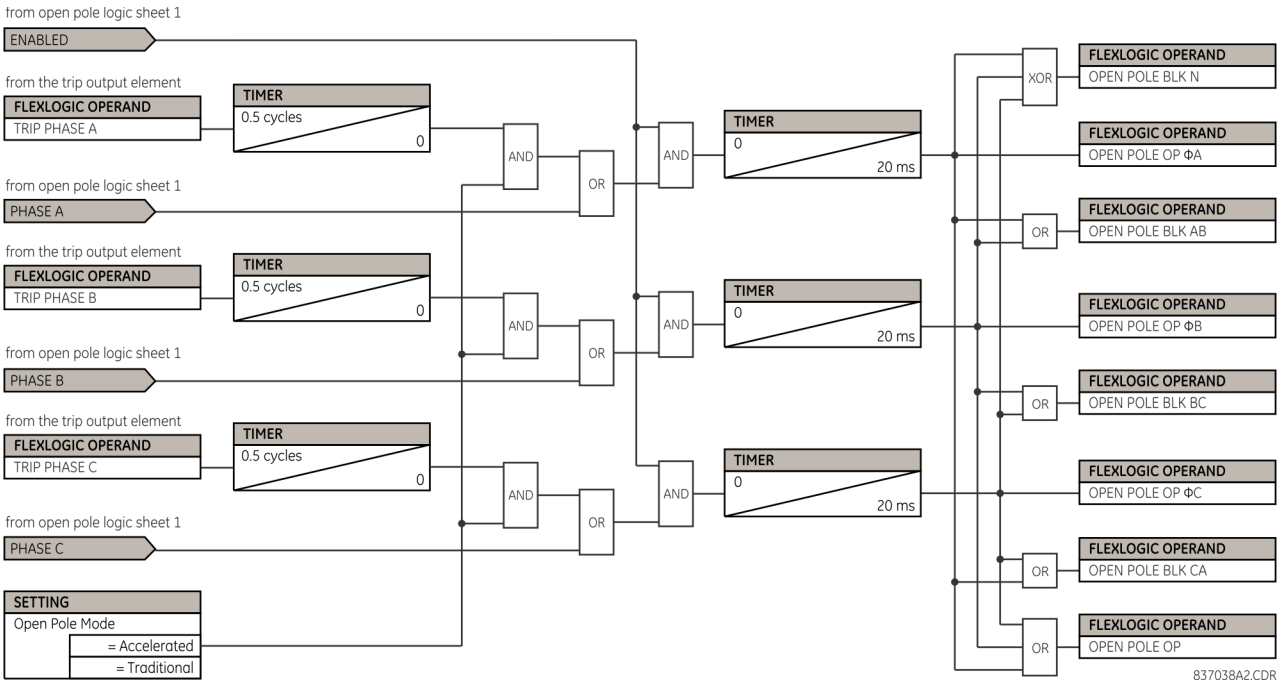

5.8.11.9 Thermal overload protection (ANSI 49)

SETTINGS ⇨⇩ CONTROL ELEMENTS ⇨⇩ MONITORING ELEMENTS ⇨⇩ THERMAL OVERLOAD PROTECTION ⇨ THERMAL PROTECTION 1(2)

■ THERMAL ■ PROTECTION 1	⇔	**THERMAL PROTECTION 1 FUNCTION: Disabled**	Range: Disabled, Enabled
	⇩	**THERMAL PROTECTION 1 SOURCE: SRC1**	Range: SRC 1, SRC 2, SRC 3, SRC 4
	⇩	**THERMAL PROTECTION 1 BASE CURR: 0.80 pu**	Range: 0.20 to 3.00 pu in steps of 0.01
	⇩	**THERMAL PROTECTION 1 k FACTOR: 1.10**	Range: 1.00 to 1.20 in steps of 0.05
	⇩	**THERM PROT 1 TRIP TIME CONST: 45 min**	Range: 0 to 1000 min. in steps of 1
	⇩	**THERM PROT 1 RESET TIME CONST: 45 min**	Range: 0 to 1000 min. in steps of 1
	⇩	**THERM PROT 1 MINIM RESET TIME: 20 min**	Range: 0 to 1000 min. in steps of 1
	⇩	**THERM PROT 1 RESET: Off**	Range: FlexLogic operand
	⇩	**THERM PROT 1 BLOCK: Off**	Range: FlexLogic operand
	⇩	**THERMAL PROTECTION 1 TARGET: Self-reset**	Range: Self-reset, Latched, Disabled
	⇧	**THERMAL PROTECTION 1 EVENTS: Disabled**	Range: Disabled, Enabled

The thermal overload protection element corresponds to the IEC 255-8 standard and is used to detect thermal overload conditions in protected power system elements. Choosing an appropriate time constant element can be used to protect different elements of the power system. The cold curve characteristic is applied when the estimated I_p current is less than 10% of the base current. If I_p current is greater or equal than 10% than the base current, then the hot curve characteristic is applied. I_p current is estimated with a fixed time constant for both cooling and heating that reaches to the final value in two seconds on a step change (either step up or step down) signal.

The IEC255-8 cold curve is defined as follows:

$$t_{op} = \tau_{op} \times \ln\left(\frac{I^2}{I^2 - (k \times I_B)^2}\right) \quad \textbf{Eq. 5-44}$$

The IEC255-8 hot curve is defined as follows:

$$t_{op} = \tau_{op} \times \ln\left(\frac{I^2 - I_p^2}{I^2 - (k \times I_B)^2}\right) \quad \textbf{Eq. 5-45}$$

where

t_{op} = time to operate
τ_{op} = thermal protection trip time constant
I = measured overload RMS current
I_p = measured load RMS current before overload occurs
k = IEC 255-8 k-factor applied to I_B, defining maximum permissible current above nominal current
I_B = protected element base (nominal) current

To ensure element accuracy for high overcurrent conditions, the maximum value of $I/(k \times I_B)$ is limited to 8, even when realistically it is exceeding this value.

The reset time of the thermal overload protection element is also time delayed using following formula:

$$t_{rst} = \tau_{rst} \times \ln\left(\frac{(k \times I_B)^2}{\left|I^2 - (k \times I_B)^2\right|}\right) + T_{min} \quad \textbf{Eq. 5-46}$$

where

τ_{rst} = thermal protection trip time constant
T_{min} = a minimum reset time setting

Figure 5-215: IEC 255-8 sample operate and reset curves

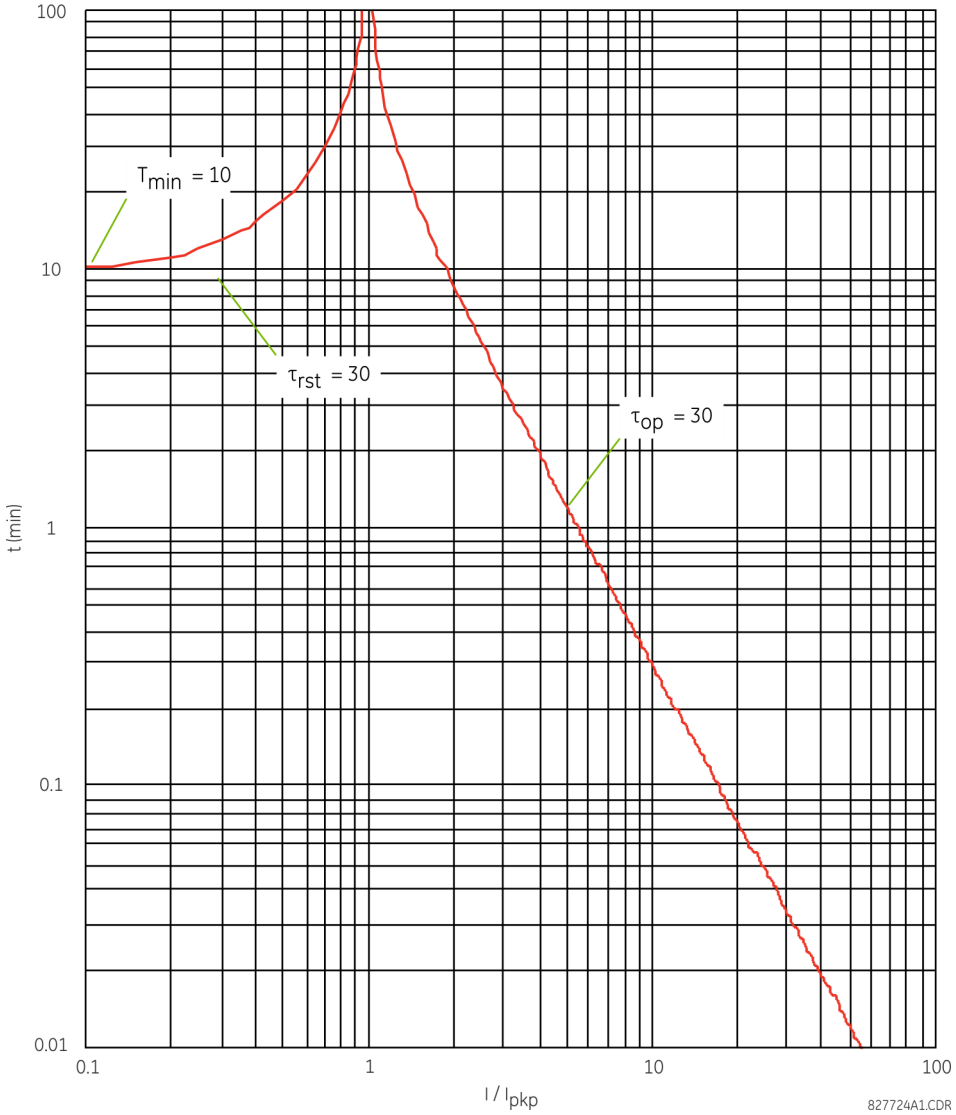

The thermal overload protection element estimates accumulated thermal energy E using the following equations calculated each power cycle. When current is greater than the pickup level, $I_n > k \times I_B$, element starts increasing the thermal energy:

$$E_n = E_{n-1} + \frac{\Delta t}{t_{op(In)}} \qquad \textbf{Eq. 5-47}$$

When current is less than the dropout level, $I_n > 0.97 \times k \times I_B$, the element starts decreasing the thermal energy:

$$E_n = E_{n-1} - \frac{\Delta t}{t_{rst(In)}} \qquad \textbf{Eq. 5-48}$$

where

Δt is the power cycle duration
n is the power cycle index
$t_{op(In)}$ is the trip time calculated at index n as per the IEC255-8 cold curve or hot curve equations
$t_{rst(In)}$ is the reset time calculated at index n as per the reset time equation

I_n is the measured overload RMS current at index n
E_n is the accumulated energy at index n
E_{n-1} is the accumulated energy at index n – 1

The thermal overload protection element removes the **THERMAL PROT 1 OP** output operand when E < 0.05. In case of emergency, the thermal memory and **THERMAL PROT 1 OP** output operand can be reset using **THERM PROT 1 RESET** setting. All calculations are performed per phase. If the accumulated energy reaches value 1 in any phase, the thermal overload protection element operates and only resets when energy is less than 0.05 in all three phases.

Table 5-42: Typical time constants

Protected equipment	Time constant	Minimum reset time
Capacitor bank	10 minutes	30 minutes
Overhead line	10 minutes	20 minutes
Air-core reactor	40 minutes	30 minutes
Busbar	60 minutes	20 minutes
Underground cable	20 to 60 minutes	60 minutes

The figure shows the logic for the thermal overload protection element.

Figure 5-216: Thermal overload protection logic

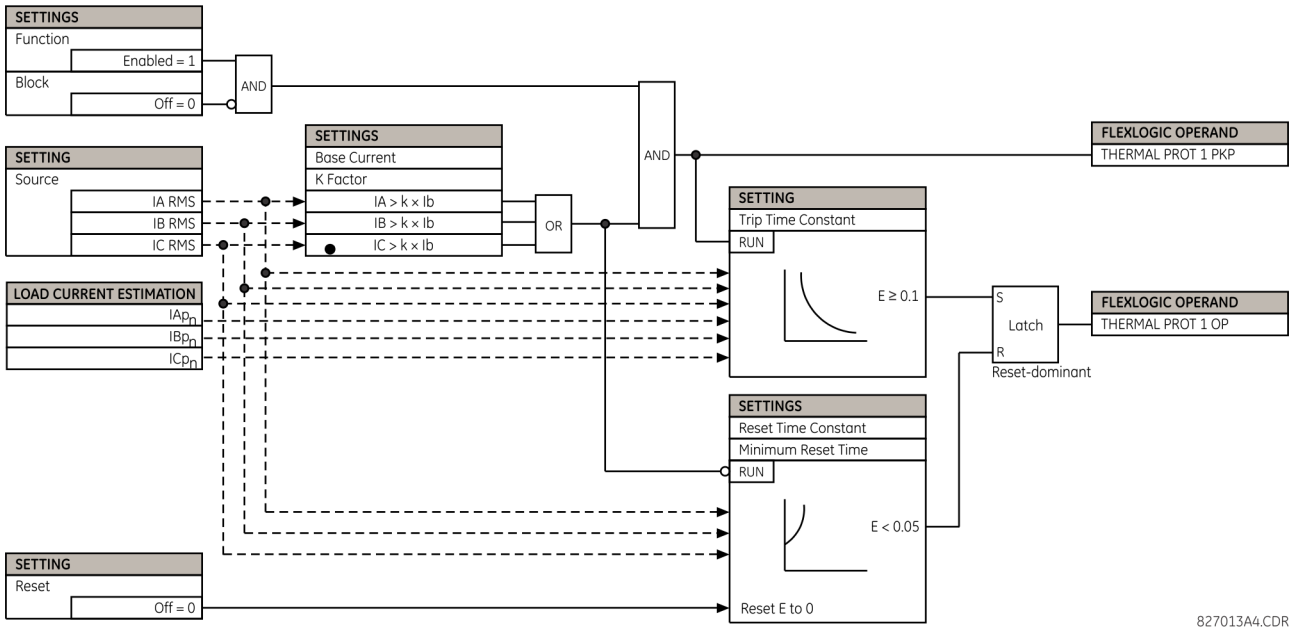

5.8.11.10 Broken conductor detection

SETTINGS ⇨⇩ CONTROL ELEMENTS ⇨⇩ MONITORING ELEMENTS ⇨⇩ BROKEN CONDUCTOR 1(2)

■ **BROKEN CONDUCTOR 1** ■	⇔	**BROKEN CONDUCTOR 1 FUNCTION: Disabled**	Range: Disabled, Enabled
	⇩	**BROKEN CONDUCTOR 1 SOURCE: SRC 1**	Range: SRC 1, SRC 2, SRC 3, SRC 4
	⇩	**BROKEN CONDUCTOR 1 I2/I1 RATIO: 20%**	Range: 20.0% to 100.0% in steps of 0.1%
	⇩	**BROKEN CONDUCTOR 1 I1 MIN: 0.10 pu**	Range: 0.05 to 1.00 pu in steps of 0.01

⇕	**BROKEN CONDUCTOR 1 I1 MAX: 1.50 pu**	Range: 0.05 to 5.00 pu in steps of 0.01
⇕	**BROKEN CONDUCTOR 1 PKP DELAY: 20.000 s**	Range: 0.000 to 65.535 s in steps of 0.001
⇕	**BROKEN CONDCT 1 BLK: Off**	Range: FlexLogic operand
⇕	**BROKEN CONDUCTOR 1 TARGET: Self-reset**	Range: Self-reset, Latched, Disabled
⇧	**BROKEN CONDUCTOR 1 EVENTS: Disabled**	Range: Disabled, Enabled

The broken conductor function detects a transmission line broken conductor condition or a single-pole breaker malfunction condition by checking the phase current input signals and the I_2 / I_1 ratio. The intent is to detect a single-phase broken conductor only. As such, two-phase or three-phase broken conductors cannot be detected.

To distinguish between single-phase disappearance and system disturbance in all three phases (such as load change and switching), the broken conductor element monitors the change in all three phase currents at the present instance and at four cycles previous. It also monitors changes in the I_2 / I_1 ratio, I_1 minimum, and I_1 maximum.

Do not use the broken conductor function to respond to fault transients and single-pole tripping/reclosing conditions. Therefore, program the time delay to a sufficient length to ensure coordination with the breaker dead time of the recloser function.

BROKEN CONDUCTOR 1 FUNCTION — This setting enables and disables the broken conductor function.

BROKEN CONDUCTOR 1 SOURCE — Selects a signal source used to provide three-phase current inputs to this function.

BROKEN CONDUCTOR 1 I2/I1 RATIO — This setting specifies the ratio of negative-sequence current to positive-sequence current. When one phase conductor is broken, the I_2 / I_1 ratio with a balanced remaining two phases is 50%. So normally you this setting below 50% (for example, to 30%).

BROKEN CONDUCTOR 1 I1 MIN — This setting specifies the minimum positive-sequence current supervision level. Ensure this setting is programmed to a sufficient level to prevent I_2 / I_1 from erratic pickup due to a low I_1 signal. However, do not set this setting too high, since the broken conductor condition cannot be detected under light load conditions when I_1 is less than the value specified by this setting.

BROKEN CONDUCTOR 1 I1 MAX — This setting specifies the maximum I_1 level allowed for the broken conductor function to operate. When I_1 exceeds this setting, this it is considered a fault. In order for this function to not respond to any fault conditions, set this setting to less than the maximum load current.

BROKEN CONDUCTOR 1 PKP DELAY — This setting specifies the pickup time delay for this function to operate after assertion of the broken conductor pickup FlexLogic operand.

5

Figure 5-217: Broken conductor detection logic

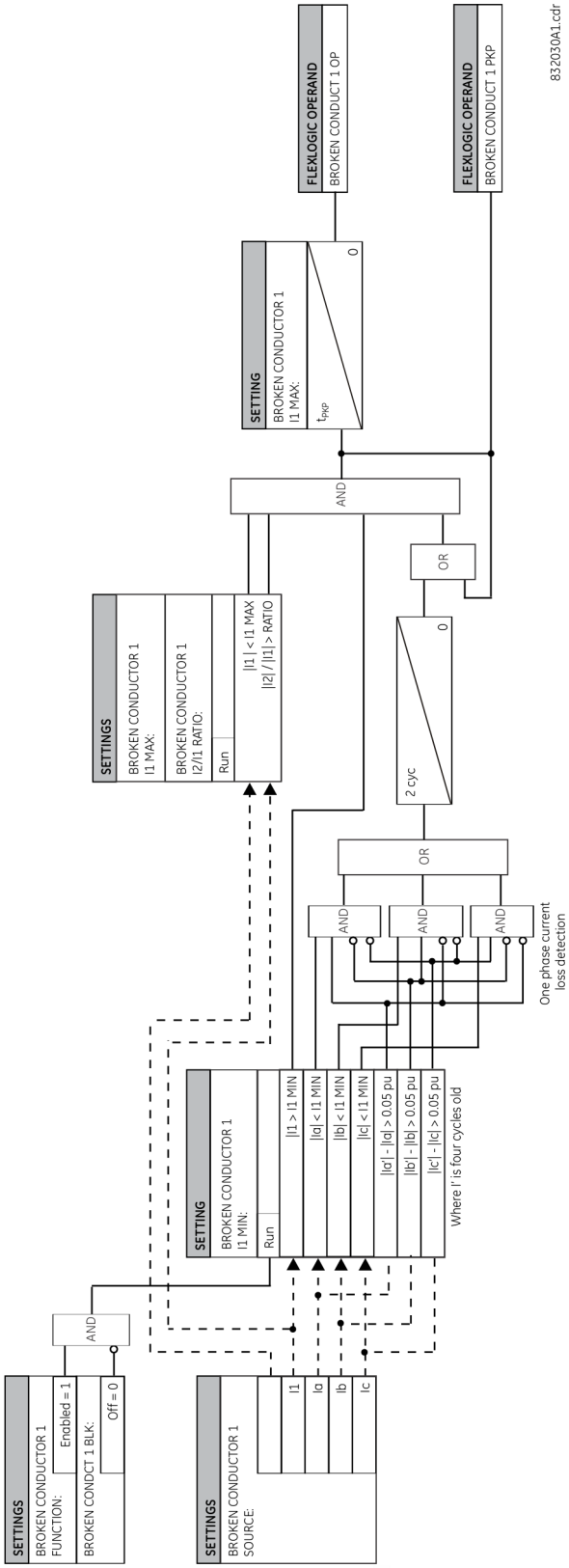

5.8.12 Pilot schemes

5.8.12.1 Menu

SETTINGS ⇨⇩ CONTROL ELEMENTS ⇨⇩ PILOT SCHEMES

■ PILOT SCHEMES ■	⇔	■ DUTT SCHEME ■	See below
	⇩	■ PUTT SCHEME ■	See page 5-381
	⇩	■ POTT SCHEME ■	See page 5-383
	⇩	■ POTT1 SCHEME ■	See page 5-386
	⇩	■ HYBRID POTT SCHEME ■	See page 5-387
	⇩	■ BLOCKING SCHEME ■	See page 5-391
	⇩	■ BLOCKING1 SCHEME ■	See page 5-395
	⇧	■ DCUB SCHEME ■	See page 5-396

This menu is for selection and configuration of protection signaling schemes. All schemes are available for single-pole tripping applications and can be used with one, two, or four-bit communications channels. Choices of communications channel include Remote Inputs/Outputs and telecommunications interfaces.

For more information, see the Application of Settings chapter.

5

5.8.12.2 Direct under-reaching transfer trip (DUTT)

SETTINGS ⇨⇩ CONTROL ELEMENTS ⇨⇩ PILOT SCHEMES ⇨⇩ DUTT SCHEME

■ DUTT SCHEME ■	⇔	DUTT SCHEME FUNCTION: Disabled	Range: Disabled, Enabled
	⇩	DUTT SCHEME BLOCK: Off	Range: FlexLogic operand
	⇩	DUTT SEAL-IN DELAY: 0.000 s	Range: 0.000 to 65.535 s in steps of 0.001
	⇩	DUTT NO OF COMM BITS: 1	Range: 1, 2, or 4
	⇩	DUTT RX1: Off	Range: FlexLogic operand
	⇩	DUTT RX2: Off	Range: FlexLogic operand
	⇩	DUTT RX3: Off	Range: FlexLogic operand
	⇩	DUTT RX4: Off	Range: FlexLogic operand
	⇩	DUTT SCHEME TARGET: Self-reset	Range: Self-Reset, Latched, Disabled
	⇧	DUTT SCHEME EVENT: Disabled	Range: Disabled, Enabled

This scheme uses an under-reaching Zone 1 distance element to key a transfer trip signal(s) to the remote end(s), where on receipt, the DUTT pilot scheme operates without additional protection supervision. For proper operation of the scheme, the Zone 1 phase and ground distance elements must be enabled, configured, and set per rules of distance relaying.

In single-pole tripping applications, the scheme uses local fault type identification provided by the Phase Selector together with information received from the remote terminal(s). The latter can be coded into one, two, or four bits over the communications channel.

The scheme generates output operands (DUTT TX1 through DUTT TX4) that are used to transmit the direct under-reaching signals to the remote end(s). Choices of communications channel include remote inputs/outputs and telecommunications interfaces. When used with telecommunications facilities, assign the output operands to operate output contacts connected to assert the individual bits at the interface.

To make the scheme a fully operational stand-alone feature, the scheme output operands must be configured to interface with other relay functions, output contacts in particular. Typically, you program the output operands to initiate a trip, breaker fail, and autoreclose, and drive a user-programmable LED as per user application. When used in conjunction with the trip output element, the scheme is pre-configured to initiate trip, breaker fail, and single-pole autoreclose actions.

DUTT SCHEME BLOCK — This setting allows the user to assign any FlexLogic operand to block the scheme. Contact inputs from a pilot cut-out switch are typically used for this purpose.

DUTT SEAL-IN DELAY — The output FlexLogic operand (DUTT OP) is produced according to the DUTT scheme logic. A seal-in time delay is applied to this operand for coping with noisy communication channels such as a power line carrier. The **DUTT SEAL-IN DELAY** is a minimum guaranteed duration of the DUTT OP pulse. As this operand activates the Trip Table of the DUTT scheme, the trip operands DUTT TRIP A, B, C, and 3P are sealed-in for the same period of time.

DUTT NO OF COMM BITS — This setting specifies the number of bits available on the communications channel. With only one bit available, the scheme sends the direct under-reaching transfer trip command on bit number 1 (DUTT TX1 operand) and responds to the direct trip command received on bit number 1 (DUTT RX1 setting). The scheme uses only local fault type identification provided by the Phase Selector to assert the output operands DUTT TRIP A, B, C, and 3P.

DUTT RX1 through **DUTT RX4** — These settings allow the user to select the FlexLogic operands that represent the receive signals for the scheme. Typically input contacts interfacing with a signaling system are used.

The DUTT scheme requires a secure and dependable signaling system. For this reason, a series/parallel combination of receive signal "contacts" is often used. This is accomplished by using a multi-bit communications system to transmit redundant copies of the TX signal (often via different paths) and building appropriate security logic (such as series (AND gate) or 2-out-of-3 voting logic) with FlexLogic. The **DUTT RX1(4)** settings should be associated with the final (secure) TX signals.

In single-bit applications, **DUTT RX1** must be used. In two-bit applications, **DUTT RX1** and **DUTT RX2** must be used. In four-bit applications, **DUTT RX1**, **DUTT RX2**, **DUTT RX3**, and **DUTT RX4** must be used. In multi-terminal applications, connect the RX signals from two or more remote terminals through OR gates in the FlexLogic, and configure the resulting signals as the DUTT RX inputs.

Figure 5-218: DUTT scheme logic

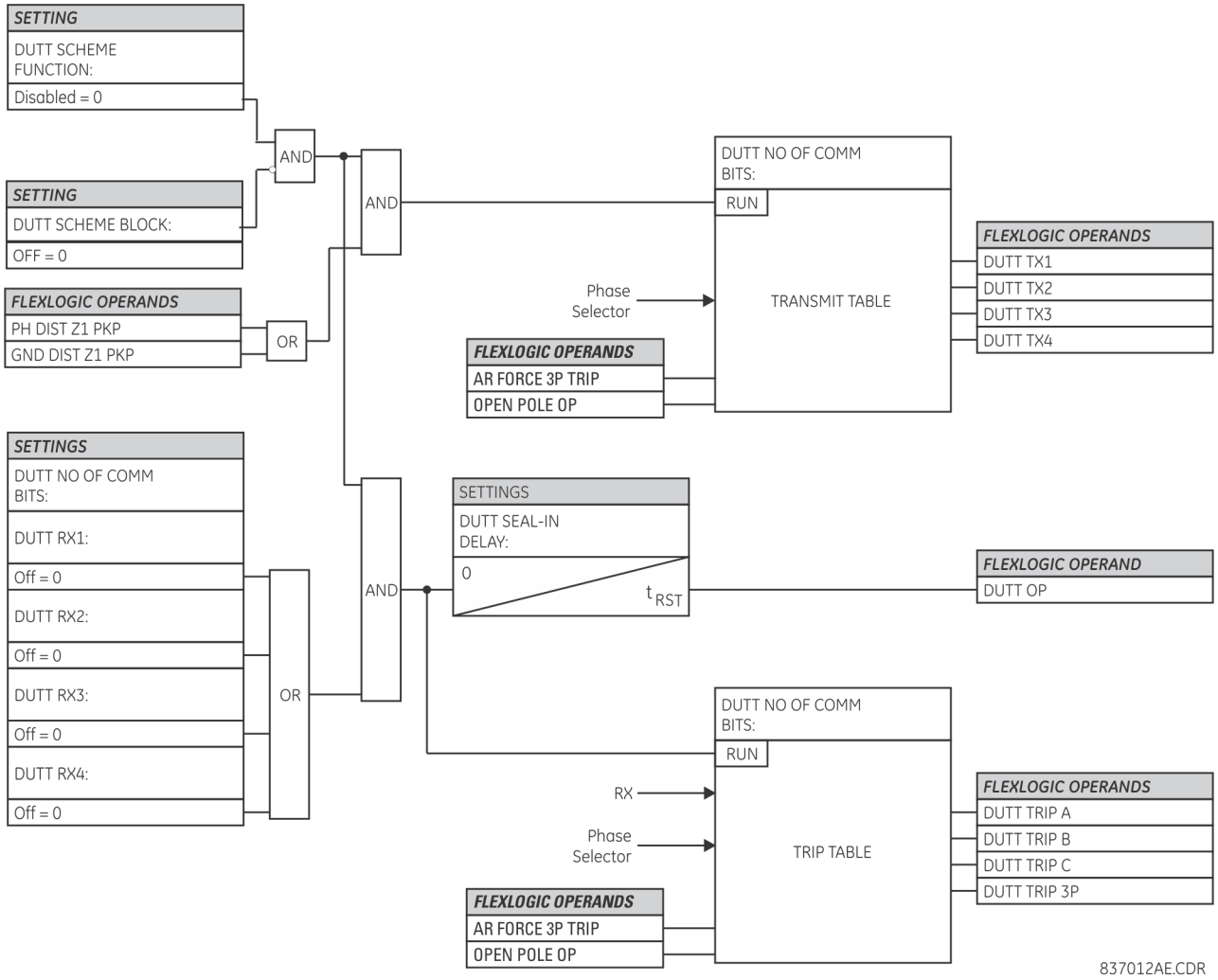

5.8.12.3 Permissive under-reaching transfer trip (PUTT)

SETTINGS ⇨⇩ CONTROL ELEMENTS ⇨⇩ PILOT SCHEMES ⇨⇩ PUTT SCHEME

■ **PUTT SCHEME** ■	⇔	**PUTT SCHEME FUNCTION: Disabled**	Range: Disabled, Enabled
	⇩	**PUTT SCHEME BLOCK: Off**	Range: FlexLogic operand
	⇩	**PUTT RX PICKUP DELAY: 0.000 s**	Range: 0.000 to 65.535 s in steps of 0.001
	⇩	**PUTT SEAL-IN DELAY: 0.000 s**	Range: 0.000 to 65.535 s in steps of 0.001
	⇩	**PUTT NO OF COMM BITS: 1**	Range: 1, 2, or 4
	⇩	**PUTT RX1: Off**	Range: FlexLogic operand
	⇩	**PUTT RX2: Off**	Range: FlexLogic operand

⇕	**PUTT RX3:** **Off**	Range: FlexLogic operand
⇕	**PUTT RX4:** **Off**	Range: FlexLogic operand
⇕	**PUTT SCHEME TARGET:** **Self-reset**	Range: Self-Reset, Latched, Disabled
⇧	**PUTT SCHEME EVENT:** **Disabled**	Range: Disabled, Enabled

This scheme uses an under-reaching zone 1 distance element to key a transfer trip signal(s) to the remote terminal(s) where it is supervised by an over-reaching zone 2 distance element. For proper operation, the zone 1 and 2 phase and ground distance elements must be enabled, configured, and set per rules of distance relaying.

In single-pole tripping applications, the scheme uses local fault type identification provided by the phase selector together with information received from the remote terminal(s). The scheme generates output operands (PUTT TX1 through PUTT TX4) that are used to transmit the signal to the remote end(s). Choices of communications channel include remote inputs/outputs and telecommunications interfaces. When used with telecommunications facilities, assign the output operands to operate output contacts connected to assert the individual bits at the interface.

To make the scheme a fully operational stand-alone feature, the scheme output operands must be configured to interface with other relay functions, output contacts in particular. Typically, you program the output operands to initiate a trip, breaker fail, and autoreclose, and drive a user-programmable LED as per user application. When used in conjunction with the Trip Output element, the scheme is pre-configured to initiate trip, breaker fail and single-pole autoreclose actions.

PUTT SCHEME BLOCK — This setting allows the user to assign any FlexLogic operand to block the scheme. Contact inputs from a pilot cut-out switch are typically used for this purpose.

PUTT RX PICKUP DELAY — This setting enables the relay to cope with spurious receive signals. Set this delay longer than the longest spurious TX signal that can be received simultaneously with the zone 1 pickup. The selected delay increases the response time of the scheme.

PUTT SEAL-IN DELAY — The output FlexLogic operand (PUTT OP) is produced according to the PUTT scheme logic. A seal-in time delay is applied to this operand for coping with noisy communication channels such as a power line carrier. The **PUTT SEAL-IN DELAY** is a minimum guaranteed duration of the PUTT OP pulse. As this operand activates the trip table of the PUTT scheme, the trip operands PUTT TRIP A, B, C, and 3P are sealed-in for the same period of time.

PUTT NO OF COMM BITS — This setting specifies the number of bits of the communications channel available for the scheme. The transmit codes and trip table of the PUTT scheme are identical as those for the direct under-reaching transfer trip scheme.

PUTT RX1 through **PUTT RX4** — These settings allow the user to select the FlexLogic operands that represent the receive signals for the scheme. Typically input contacts interfacing with a signaling system are used. In single-bit applications, **PUTT RX1** must be used. In two-bit applications, **PUTT RX1** and **PUTT RX2** must be used. In four-bit applications, **PUTT RX1**, **PUTT RX2**, **PUTT RX3**, and **PUTT RX4** must be used. In multi-terminal applications, connect the RX signals from two or more remote terminals through OR gates in the FlexLogic, and configure the resulting signals as the PUTT RX inputs.

Figure 5-219: PUTT scheme logic

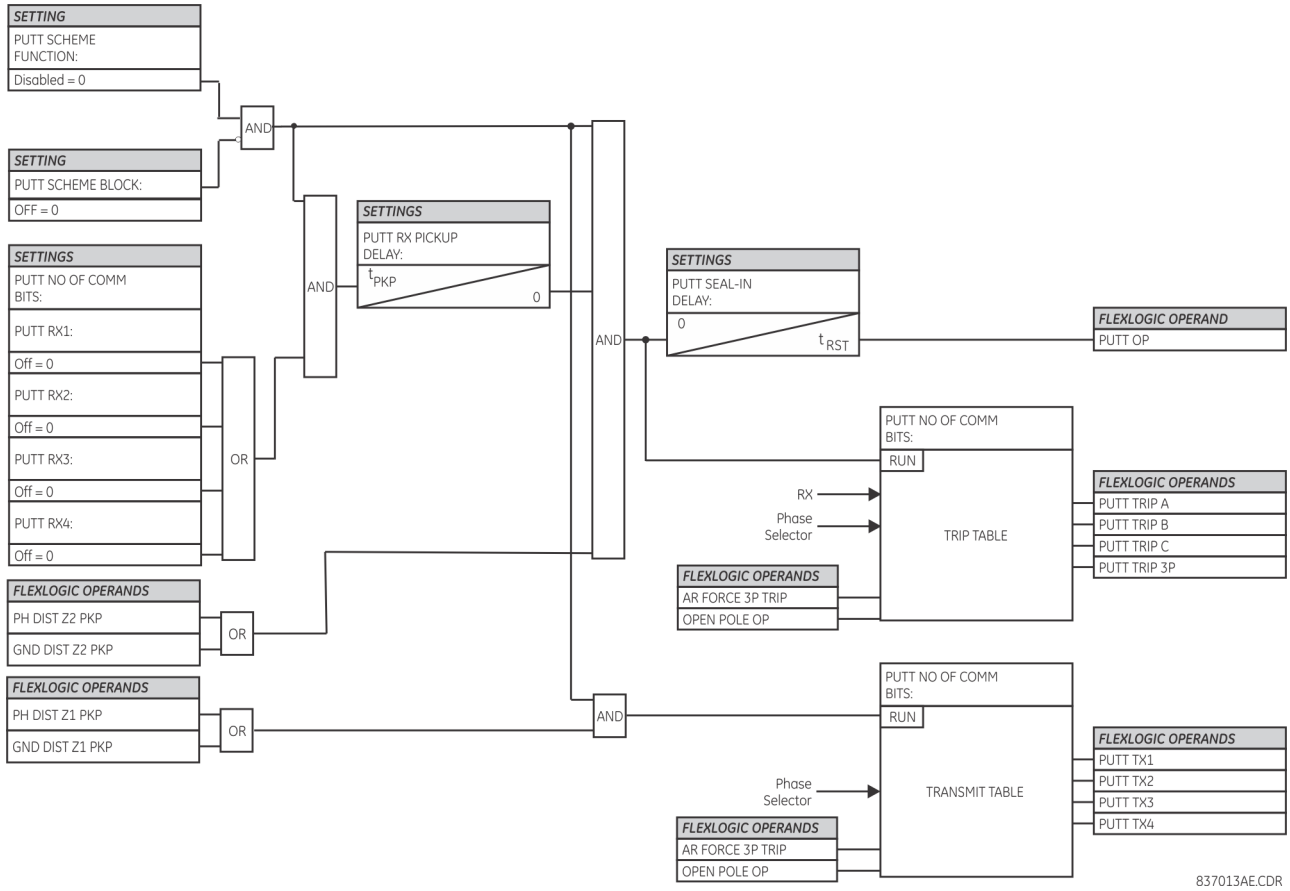

5.8.12.4 Permissive overreaching transfer trip (POTT)

SETTINGS ⇨⇩ CONTROL ELEMENTS ⇨⇩ PILOT SCHEMES ⇨⇩ POTT SCHEME

■ POTT SCHEME ■	⇔	POTT SCHEME FUNCTION: Disabled	Range: Disabled, Enabled
	⇩	POTT PERMISSIVE ECHO: Disabled	Range: Disabled, Enabled
	⇩	POTT RX PICKUP DELAY: 0.000 s	Range: 0.000 to 65.535 s in steps of 0.001
	⇩	TRANS BLOCK PICKUP DELAY: 0.020 s	Range: 0.000 to 65.535 s in steps of 0.001
	⇩	TRANS BLOCK RESET DELAY: 0.090 s	Range: 0.000 to 65.535 s in steps of 0.001
	⇩	ECHO DURATION: 0.100 s	Range: 0.000 to 65.535 s in steps of 0.001
	⇩	ECHO LOCKOUT: 0.250 s	Range: 0.000 to 65.535 s in steps of 0.001
	⇩	LINE END OPEN PICKUP DELAY: 0.050 s	Range: 0.000 to 65.535 s in steps of 0.001
	⇩	POTT SEAL-IN DELAY: 0.400 s	Range: 0.000 to 65.535 s in steps of 0.001

⇕	**GND DIR O/C FWD: Off**	Range: FlexLogic operand
⇕	**POTT RX: Off**	Range: FlexLogic operand
⇕	**POTT SCHEME TARGET: Self-reset**	Range: Self-reset, Latched, Disabled
⇧	**POTT SCHEME EVENT: Disabled**	Range: Disabled, Enabled

This scheme is intended for two-terminal line applications only. It uses an over-reaching zone 2 distance element to essentially compare the direction to a fault at both the ends of the line. Ground directional overcurrent functions available in the relay can be used in conjunction with the zone 2 distance element to key the scheme and initiate its operation. This provides increased coverage for high resistance faults.

For proper scheme operation, enable and configure the zone 2 phase and ground distance elements per the rules of distance relaying. Enable and configure the line pickup element to detect line-end-open/weak-infeed conditions. If used by this scheme, enable and configure the selected ground directional overcurrent functions accordingly.

POTT PERMISSIVE ECHO — When "Enabled," this setting results in a permissive echo signal being sent to the remote end. The permissive signal is echoed back upon receiving a reliable POTT RX signal from the remote end while the line-end-open condition is identified by the line pickup logic. The permissive echo is programmed as a one-shot logic. The echo is sent only once and then the echo logic locks out for a settable period of time (**ECHO LOCKOUT** setting). The duration of the echo pulse does not depend on the duration or shape of the received POTT RX signal but is settable as **ECHO DURATION**.

POTT RX PICKUP DELAY — This setting enables the relay to cope with spurious receive signals. Set the delay longer than the longest spurious TX signal that can occur simultaneously with the zone 2 pickup. The selected delay increases the response time of the scheme.

TRANS BLOCK PICKUP DELAY — This setting defines a transient blocking mechanism embedded in the POTT scheme for coping with the exposure of a ground directional overcurrent function (if used) to current reversal conditions. The transient blocking mechanism applies to the ground overcurrent path only as the reach settings for the zone 2 distance functions is not expected to be long for two-terminal applications, and the security of the distance functions is not endangered by the current reversal conditions. Upon receiving the POTT RX signal, the transient blocking mechanism allows the RX signal to be passed and aligned with the **GND DIR O/C FWD** indication only for a period of time defined as **TRANS BLOCK PICKUP DELAY**. After that the ground directional overcurrent path is virtually disabled for a period of time specified as **TRANS BLOCK RESET DELAY**.

Set the **TRANS BLOCK PICKUP DELAY** long enough to give the selected ground directional overcurrent function time to operate, but not longer than the fastest possible operation time of the protection system that can create current reversal conditions within the reach of the selected ground directional overcurrent function. For this setting, also take into account the **POTT RX PICKUP DELAY**. The POTT RX signal is shaped for aligning with the ground directional indication as follows: the original RX signal is delayed by the **POTT RX PICKUP DELAY**, then terminated at **TRANS BLOCK PICKUP DELAY** after the pickup of the original POTT TX signal, and eventually, locked-out for **TRANS BLOCK RESET DELAY**.

TRANS BLOCK RESET DELAY — This setting defines a transient blocking mechanism embedded in the POTT scheme for coping with the exposure of a ground directional overcurrent function (if used) to current reversal conditions (see also the **TRANS BLOCK PICKUP DELAY**). Set this delay long enough to cope with transient conditions including not only current reversals but also spurious negative and zero-sequence currents occurring during breaker operations. The breaker failure time of the surrounding protection systems within the reach of the ground directional function used by the POTT scheme can be considered to make sure that the ground directional function is not jeopardized during delayed breaker operations.

ECHO DURATION — This setting defines the guaranteed and exact duration of the echo pulse. The duration does not depend on the duration and shape of the received POTT RX signal. This setting enables the relay to avoid a permanent lock-up of the transmit/receive loop.

ECHO LOCKOUT — This setting defines the lockout period for the echo logic after sending the echo pulse.

LINE END OPEN PICKUP DELAY — This setting defines the pickup setting for validation of the line end open conditions as detected by the Line Pickup logic through the LINE PICKUP LEO PKP FlexLogic operand. The validated line end open condition is a requirement for the POTT scheme to return a received echo signal (if the echo feature is enabled). Also for this setting, take into account the principle of operation and settings of the line pickup element.

POTT SEAL-IN DELAY — The output FlexLogic operand (POTT OP) is produced according to the POTT scheme logic. A seal-in time delay is applied to this operand for coping with noisy communication channels. This setting specifies a minimum guaranteed duration of the POTT OP pulse.

GND DIR O/C FWD — This setting selects the FlexLogic operand (if any) of a protection element used in addition to zone 2 for identifying faults on the protected line, and thus, for keying the communication channel and initiating operation of the scheme. Good directional integrity is the key requirement for an over-reaching forward-looking protection element used as **GND DIR O/C FWD**. Even though any FlexLogic operand can be used as **GND DIR O/C FWD** allowing the user to combine responses of various protection elements, or to apply extra conditions through FlexLogic equations, this extra signal is primarily meant to be the output operand from either the negative-sequence directional overcurrent or neutral directional overcurrent elements. Both of these elements have separate forward and reverse output operands. The forward indication should be used (**NEG SEQ DIR OC1 FWD** or **NEUTRAL DIR OC1 FWD**). For greater security and to overcome spurious directional element operation during transients, adding at least 0.5 cycles of pickup delay to the forward directional element is recommended.

POTT RX — This setting enables the user to select the FlexLogic operand that represents the receive signal (RX) for the scheme. Typically an input contact interfacing with a signaling system is used. Other choices include remote inputs and FlexLogic equations. The POTT transmit signal (TX) should be appropriately interfaced with the signaling system by assigning the output FlexLogic operand (POTT TX) to an output contact. The remote output mechanism is another choice.

The output operand from the scheme (POTT OP) must be configured to interface with other relay functions, output contacts in particular, in order to make the scheme fully operational. Typically, the output operand should be programmed to initiate a trip, breaker fail, and autoreclose, and drive a user-programmable LED as per user application.

Figure 5-220: POTT scheme logic

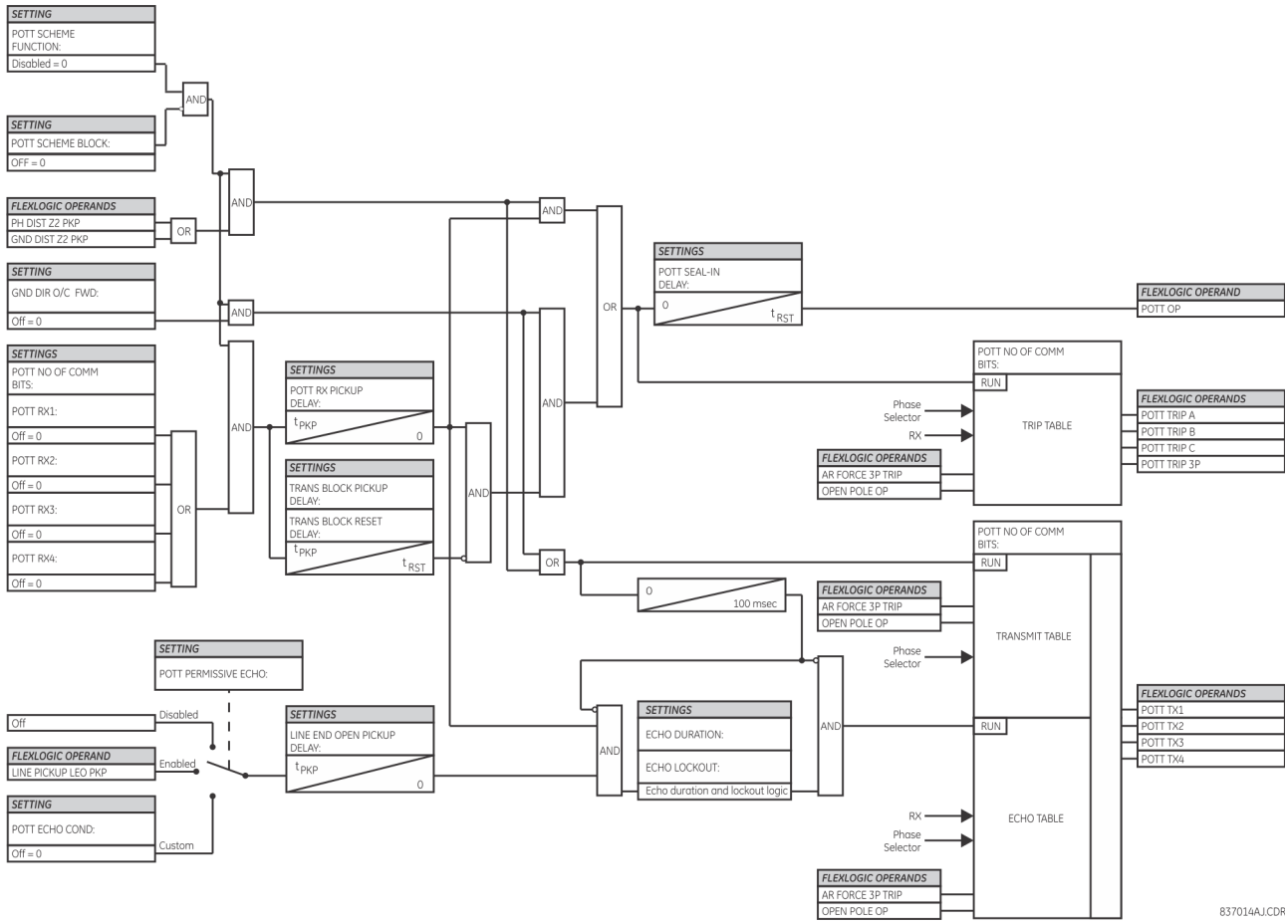

5.8.12.5 Permissive over-reaching transfer trip (POTT1)

SETTINGS ⇨⇩ CONTROL ELEMENTS ⇨⇩ PILOT SCHEMES ⇨⇩ POTT1 SCHEME

■ POTT 1 SCHEME ■	⇔	POTT1 SCHEME FUNCTION: Disabled	Range: Disabled, Enabled
	⇩	POTT1 SCHEME BLOCK: Off	Range: FlexLogic operand
	⇩	POTT1 PERMISSIVE ECHO: Disabled	Range: Disabled, Enabled, Custom
	⇩	POTT1 ECHO COND: Off	Range: FlexLogic operand
	⇩	POTT1 RX PICKUP DELAY: 0.000 s	Range: 0.000 to 65.535 s in steps of 0.001
	⇩	TRANS BLOCK PICKUP DELAY: 0.020 s	Range: 0.000 to 65.535 s in steps of 0.001
	⇩	TRANS BLOCK RESET DELAY: 0.090 s	Range: 0.000 to 65.535 s in steps of 0.001
	⇩	ECHO DURATION: 0.100 s	Range: 0.000 to 65.535 s in steps of 0.001
	⇩	ECHO LOCKOUT: 0.250 s	Range: 0.000 to 65.535 s in steps of 0.001
	⇩	LINE END OPEN PICKUP DELAY: 0.050 s	Range: 0.000 to 65.535 s in steps of 0.001
	⇩	POTT1 SEAL-IN DELAY: 0.010 s	Range: 0.000 to 65.535 s in steps of 0.001
	⇩	DIR FWD1: Off	Range: FlexLogic operand
	⇩	DIR FWD2: Off	Range: FlexLogic operand
	⇩	DIR FWD3: Off	Range: FlexLogic operand
	⇩	POTT1 NO OF COMM BITS: 1	Range: 1, 2, or 4
	⇩	POTT1 RX1: Off	Range: FlexLogic operand
	⇩	POTT1 RX2: Off	Range: FlexLogic operand
	⇩	POTT1 RX3: Off	Range: FlexLogic operand
	⇩	POTT1 RX4: Off	Range: FlexLogic operand
	⇩	POTT1 SCHEME TARGET: Self-Reset	Range: Self-Reset, Latched, Disabled
	⇧	POTT1 SCHEME EVENT: Disabled	Range: Disabled, Enabled

The POTT1 pilot scheme operates the same way as the POTT scheme, except hard-coded connections to phase and ground distance elements are removed to allow the user to choose directional elements, for example ground OC directional elements. This allows a user to apply the POTT1 scheme using solely directional elements to achieve better coordination, rather than mixing distance and ground OC directional elements together.

The settings and application guidance for the POTT scheme applies to the POTT1 scheme. See the POTT section.

DIR FWD1..3 — This setting defines the FlexLogic operand of a protection element used for keying the communication channel and initiating operation of the scheme. Good directional integrity is the key requirement for an over-reaching forward-looking protection element used as DIR FWD.

Even though any FlexLogic operand can be used as DIR FWD allowing the user to combine responses of various protection elements, or to apply extra security conditions through FlexLogic equations, this signal is primarily meant to be the output operand from either the Negative-Sequence Directional IOC or Neutral Directional IOC. Both of these elements have separate forward (FWD) and reverse (REV) output operands. The forward indication is used (**NEG SEQ DIR OC1 FWD** or **NEUTRAL DIR OC1 FWD**).

Figure 5-221: POTT1 (ground) scheme logic

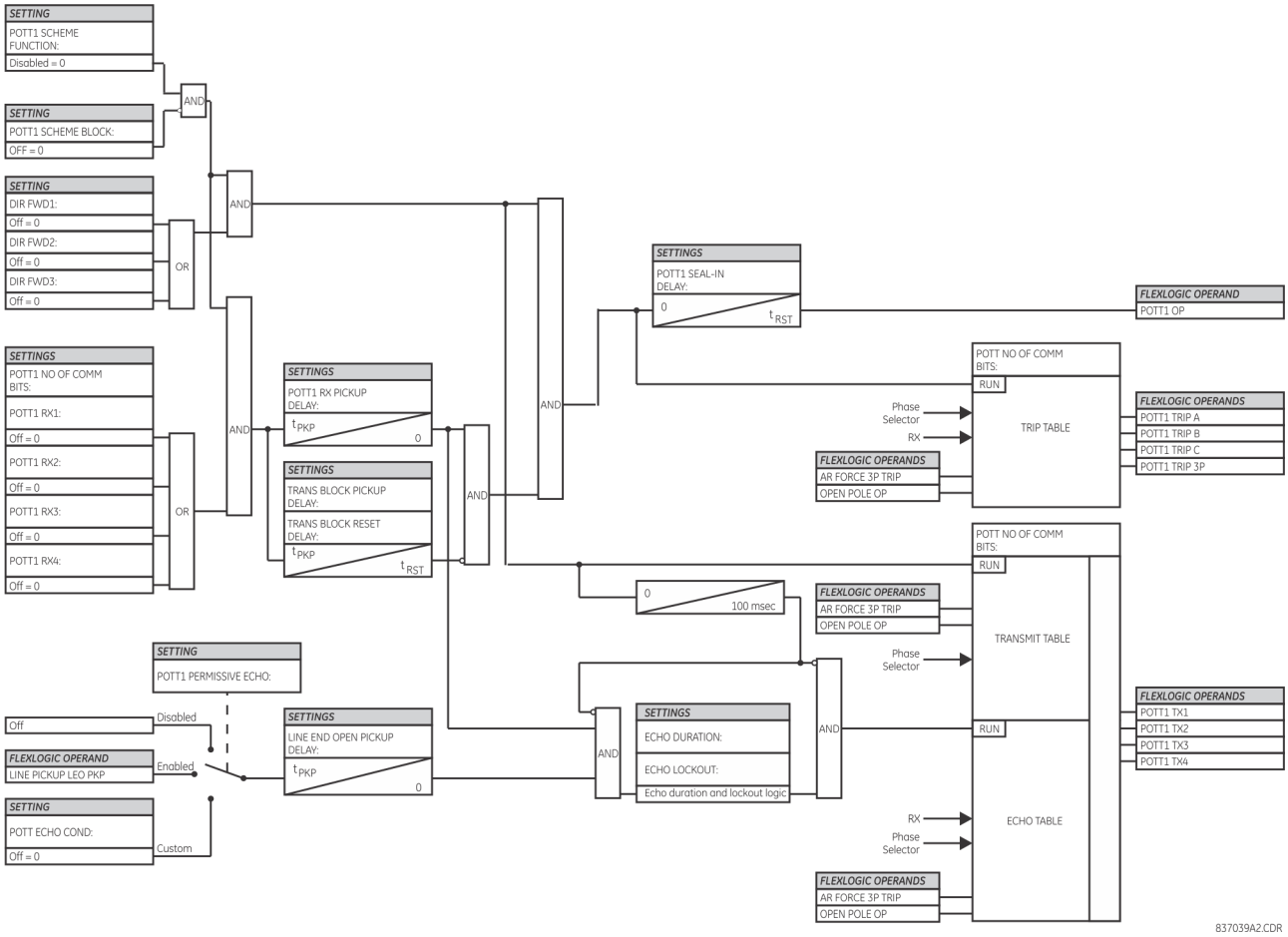

5.8.12.6 Hybrid permissive over-reaching transfer trip

SETTINGS ⇨⇩ CONTROL ELEMENTS ⇨⇩ PILOT SCHEMES ⇨⇩ HYBRID POTT SCHEME

■ **HYBRID POTT SCHEME** ■	⇔	**HYB POTT SCHEME FUNCTION: Disabled**	Range: Disabled, Enabled
	⇩	**HYB POTT BLOCK: Off**	Range: FlexLogic operand
	⇩	**HYB POTT PERMISSIVE ECHO: Disabled**	Range: Disabled, Enabled, Custom
	⇩	**HYB POTT ECHO COND: Off**	Range: FlexLogic operand

⇕	**HYB POTT WEAK INFEED: Enabled**	Range: Disabled, Enabled, Custom
⇕	**HYB POTT W/I COND: Off**	Range: FlexLogic operand
⇕	**HYB POTT RX PICKUP DELAY: 0.000 s**	Range: 0.000 to 65.535 s in steps of 0.001
⇕	**TRANS BLOCK PICKUP DELAY: 0.020 s**	Range: 0.000 to 65.535 s in steps of 0.001
⇕	**TRANS BLOCK RESET DELAY: 0.090 s**	Range: 0.000 to 65.535 s in steps of 0.001
⇕	**ECHO DURATION: 0.100 s**	Range: 0.000 to 65.535 s in steps of 0.001
⇕	**ECHO LOCKOUT: 0.250 s**	Range: 0.000 to 65.535 s in steps of 0.001
⇕	**HYB POTT SEAL-IN DELAY: 0.000 s**	Range: 0.000 to 65.535 s in steps of 0.001
⇕	**GND DIR O/C FWD: Off**	Range: FlexLogic operand
⇕	**GND DIR O/C REV: Off**	Range: FlexLogic operand
⇕	**HYB POTT NO OF COMM BITS: 1**	Range: 1, 2, or 4
⇕	**HYB POTT RX1: Off**	Range: FlexLogic operand
⇕	**HYB POTT RX2: Off**	Range: FlexLogic operand
⇕	**HYB POTT RX3: Off**	Range: FlexLogic operand
⇕	**HYB POTT RX4: Off**	Range: FlexLogic operand
⇕	**HYB POTT SCHEME TARGET: Self-reset**	Range: Self-Reset, Latched, Disabled
⇧	**HYB POTT EVENT: Disabled**	Range: Disabled, Enabled

Generally, this scheme uses an overreaching zone 2 distance element to essentially compare the direction to a fault at all terminals of the line. Ground directional overcurrent functions available in the L90 can be used in conjunction with the zone 2 distance element to key the scheme and initiate operation. This increases the coverage for high-resistance faults.

The scheme is intended for three-terminal and two-terminal applications with weak-infeed conditions. As a long reach of the overreaching distance element can be required for three-terminal applications, transient blocking logic is provided for both distance and ground directional overcurrent elements. In order to cope with weak-infeed conditions, an echo feature is made available.

By default the scheme uses the reverse-looking zone 4 distance element to identify reverse faults. Additionally, reverse-looking ground directional overcurrent functions can be used in conjunction with the zone 4.

For proper operation, the zone 2 and 4 phase and ground distance elements must be enabled, configured, and set per rules of distance relaying. Enable the line pickup element, configure it, and set properly to detect line-end-open/weak-infeed and undervoltage conditions. If used by the scheme, the selected ground directional overcurrent function(s) must be enabled, configured, and set accordingly.

In single-pole tripping applications, the scheme uses local fault type identification provided by the phase selector together with information received from the remote terminal. The scheme generates output operands (HYBRID POTT TX1 through HYBRID POTT TX4) that are used to transmit the signal to the remote terminal(s). Choices of communications channel include remote inputs/outputs and telecommunications interfaces. When used with telecommunications facilities, assign the output operand to operate an output contact connected to key the transmitter at the interface. When used with telecommunications facilities, assign the output operands to operate output contacts connected to assert the individual bits at the interface.

To make the scheme fully operational as a stand-alone feature, the scheme output operands must be configured to interface with other relay functions, output contacts in particular. Typically, you program the output operands to initiate a trip, breaker fail, and autoreclose, and drive a user-programmable LED as per user application.

When used in conjunction with the trip output element, the scheme is pre-configured to initiate trip, breaker fail, and single-pole autoreclose actions.

HYB POTT BLOCK — This setting allows the user to assign any FlexLogic operand to block the scheme. Contact inputs from a pilot cut-out switch are typically used for this purpose.

HYB POTT PERMISSIVE ECHO — If set to "Enabled", the scheme sends a permissive echo signal to the remote end(s) using a pre-programmed logic (see logic diagram below). If set to "Custom", the echo signal is sent if a condition selected via the **HYB POTT ECHO COND** setting is satisfied. The echo is sent only once and then the logic locks out for the time specified by the **ECHO LOCKOUT** setting. The duration of the echo pulse is settable as **ECHO DURATION**. Operation of the overreaching protection elements (distance zone 2 or **GND DIR O/C FWD** setting) inhibits the echo.

HYB POTT ECHO COND — This setting specifies a user-selected echo condition and applies if the **HYB POTT PERMISSIVE ECHO** is set to "Custom".

HYB POTT WEAK INFEED — If this setting is set to "Enabled", the scheme activates both the keying and operating paths using a pre-programmed weak infeed logic (see logic diagram below). If this setting is set to "Custom", the weak infeed condition is to be specified by the user via the **HYB POTT W/I COND** setting.

HYB POTT W/I COND — This setting specifies user-selected weak infeed condition and applies if the **HYB POTT WEAK INFEED** is set to "Custom".

HYB POTT RX PICKUP DELAY — This setting enables the relay to cope with spurious received signals. Set the delay longer than the longest spurious TX signal that can be received simultaneously with the zone 2 pickup. The selected delay increases the response time of the scheme.

TRANS BLOCK PICKUP DELAY — This setting defines a transient blocking mechanism embedded in the hybrid POTT scheme for coping with the exposure of both the over-reaching zone 2 and ground directional overcurrent function to current reversal conditions.

The transient blocking logic applies to both operate (trip) and send (transmit) paths. Identifying the fault as a reverse fault prevents the scheme from both operating and keying the channel. If the reverse fault condition prevails for **TRANS BLOCK PICKUP DELAY**, the blocking operation is extended by the transient blocking timer for **TRANS BLOCK RESET DELAY**. This allows riding through current reversal conditions.

However, if distance zone 1 picks up during the transient blocking condition, the blocking action is removed. This is to cope with evolving faults when an external fault is followed by an internal fault. Without the zone 1 feedback, the trip is delayed unnecessarily.

Do not set the **TRANS BLOCK PICKUP DELAY** longer than the fastest possible trip time for faults on an adjacent line so that extended blocking action can be established. Take into account the pickup time of the reverse-looking elements of the scheme.

Do not set the delay too short, in order to avoid locking up a spurious reverse fault indication that can occur during internal fault conditions.

TRANS BLOCK RESET DELAY — This setting defines a transient blocking mechanism embedded in the hybrid POTT scheme for coping with the exposure of the overreaching protection functions to current reversal conditions (see also the **TRANS BLOCK PICKUP DELAY**).

Set this delay long enough to cope with transient conditions including not only current reversals but also spurious negative and zero-sequence currents occurring during breaker operations (in the case when neutral directional overcurrent or negative-sequence directional overcurrent functions are used). Consider the breaker failure time of the surrounding protection systems within the reach of the ground directional function used by the hybrid POTT scheme, to make sure that the ground directional function is not jeopardized during delayed breaker operations.

ECHO DURATION — This setting defines the guaranteed and exact duration of the echo pulse. The duration is not dependent on the duration and shape of received RX signals. This setting enables the relay to avoid a permanent lock-up of the transmit/receive loop.

ECHO LOCKOUT — This setting defines the lockout period for the echo logic after sending the echo pulse. This enables the relay to avoid oscillations of the echo pulses during an autoreclosure dead-time after clearing an internal fault.

HYB POTT SEAL-IN DELAY — The output FlexLogic operand (HYB POTT OP) is produced according to the hybrid POTT scheme logic. The **HYB POTT SEAL-IN DELAY** defines a minimum guaranteed duration of the HYB POTT OP pulse. As this operand runs the trip table of the hybrid POTT scheme, the trip operands HYB POTT TRIP A, B, C, and 3P are sealed-in for the same period of time.

GND DIR O/C FWD — This setting defines the FlexLogic operand (if any) of a protection element that is used in addition to zone 2 for identifying faults on the protected line, and thus, for keying the communication channel and initiating operation of the scheme (both through the transient blocking logic). Good directional integrity is the key requirement for an over-reaching forward-looking protection element used as **GND DIR O/C FWD**.

Even though any FlexLogic operand could be used as **GND DIR O/C FWD** enabling the user to combine responses of various protection elements or to apply extra conditions through FlexLogic equations, this extra signal is primarily meant to be the output operand from either the negative-sequence directional or neutral directional overcurrent elements. Both these elements have separate forward (FWD) and reverse (REV) output operands. The forward indication should be used (**NEG SEQ DIR OC1 FWD** or **NEUTRAL DIR OC1 FWD**).

Coordinate the selected protection element (or elements in combination) with the selection of **GND DIR O/C REV**. For all the forward external faults seen by an element used as **GND DIR O/C FWD** at one end of the line, the reverse-looking element used as **GND DIR O/C REV** at the other end picks up and provides a blocking signal. For greater security and to overcome spurious directional element operation during transients, adding at least 0.5 cycles of pickup delay to the forward directional element is recommended.

GND DIR O/C REV — This setting defines the FlexLogic operand (if any) of a protection element used in addition to zone 4 for identifying reverse faults, and thus, for stopping the transmit signal and initiating the transient blocking timer. Good directional integrity is the key requirement for a reverse-looking protection element used as **GND DIR O/C REV**.

Even though any FlexLogic operand can be used as **GND DIR O/C REV** enabling the user to combine responses of various protection elements or to apply extra conditions through FlexLogic equations, this extra signal is primarily meant to be the output operand from either the negative sequence directional or neutral directional overcurrent element. Both these elements have separate forward (FWD) and reverse (REV) output operands. Use the reverse indication (**NEG SEQ DIR OC1 REV** or **NEUTRAL DIR OC1 REV**).

Coordinate the selected protection element (or elements in combination) with the selection of **GND DIR O/C FWD**. For all the forward external faults seen by an element used as **GND DIR O/C FWD** at one end of the line, the reverse-looking element used as **GND DIR O/C REV** at the other end picks up and provides a blocking signal. For greater security and to overcome spurious directional element operation during transients, adding a pickup delay greater than the pilot channel delay to the reverse directional element is recommended.

HYB POTT NO OF COMM BITS — This setting specifies the number of bits of the communications channel available for the scheme. The transmit codes and trip table of the hybrid POTT scheme are the same as those for the permissive under-reaching transfer trip scheme. See the description of the PUTT scheme for information.

HYB POTT RX1 through **HYB POTT RX4** — These settings allow the user to select the FlexLogic operands that represent the receive signals for the scheme. Typically, input contacts interfacing with a signaling system are used. In single-bit applications, **HYB POTT RX1** must be used. In two-bit applications, **HYB POTT RX1** and **HYB POTT RX2** must be used. In four-bit applications, **HYB POTT RX1**, **HYB POTT RX2**, **HYB POTT RX3**, and **HYB POTT RX4** must be used.

Figure 5-222: Hybrid POTT scheme logic

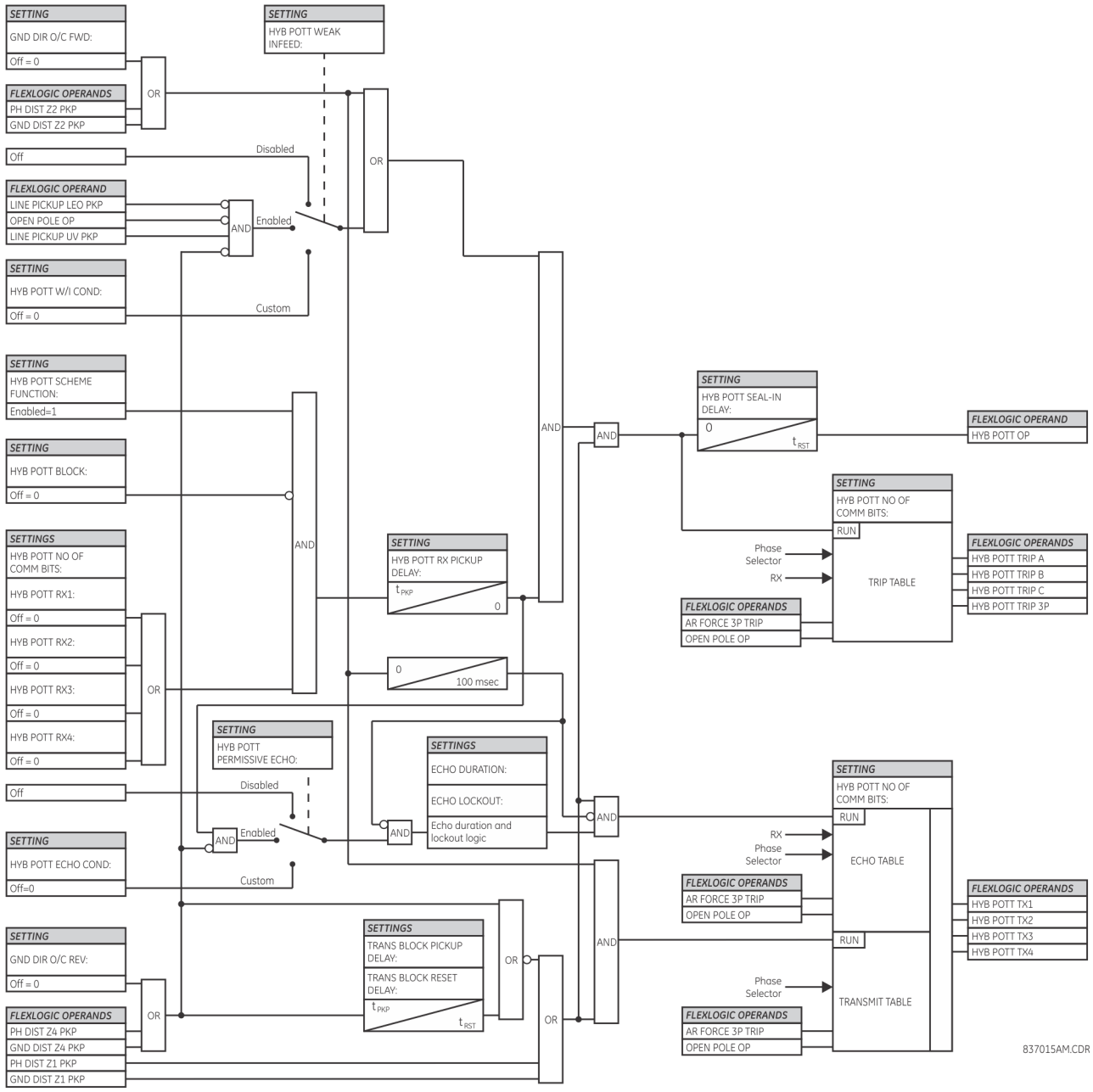

5.8.12.7 Directional comparison blocking

SETTINGS ⇨⇩ CONTROL ELEMENTS ⇨⇩ PILOT SCHEMES ⇨⇩ BLOCKING SCHEME

■ **BLOCKING SCHEME** ■	⇔	**BLOCKING SCHEME FUNCTION: Disabled**	Range: Disabled, Enabled
	⇕	**BLOCK SCHEME BLOCK: Off**	Range: FlexLogic operand
	⇕	**BLOCK RX CO-ORD PKP DELAY: 0.010 s**	Range: 0.000 to 65.535 s in steps of 0.001

⇕	**TRANS BLOCK PICKUP DELAY: 0.030 s**	Range: 0.000 to 65.535 s in steps of 0.001
⇕	**TRANS BLOCK RESET DELAY: 0.090 s**	Range: 0.000 to 65.535 s in steps of 0.001
⇕	**BLOCK SCHEME SEAL-IN DELAY: 0.000 s**	Range: 0.000 to 65.535 s in steps of 0.001
⇕	**GND DIR O/C FWD: Off**	Range: FlexLogic operand
⇕	**GND DIR O/C REV: Off**	Range: FlexLogic operand
⇕	**BLOCK SCHEME NO OF COMM BITS: 1**	Range: 1, 2, or 4
⇕	**BLOCK SCHEME RX1: Off**	Range: FlexLogic operand
⇕	**BLOCK SCHEME RX2: Off**	Range: FlexLogic operand
⇕	**BLOCK SCHEME RX3: Off**	Range: FlexLogic operand
⇕	**BLOCK SCHEME RX4: Off**	Range: FlexLogic operand
⇕	**BLOCK SCHEME TARGET: Self-reset**	Range: Self-Reset, Latched, Disabled
⇧	**BLOCK SCHEME EVENT: Disabled**	Range: Disabled, Enabled

Generally, the scheme compares the direction to a fault at all terminals of the line. Unlike the permissive schemes, the absence of a blocking signal permits operation of the scheme. Consequently, the scheme is biased toward dependability and requires an "on/off" type of signaling.

By default, this scheme uses only a forward-looking over-reaching zone 2 distance element to identify forward faults. Ground directional overcurrent functions available in the relay can be used in conjunction with the zone 2 distance element to increase the coverage for high-resistance faults. Also by default, only a reverse-looking zone 4 distance element to identify reverse faults. Ground directional overcurrent functions available in the relay can be used in conjunction with the zone 4 distance element for better time and sensitivity coordination.

For proper operation, the zone 2 and 4 phase and ground distance elements must be enabled, configured, and set per rules of distance relaying. If used by this scheme, the selected ground directional overcurrent functions must be enabled, configured, and programmed accordingly.

In single-pole tripping applications, the scheme uses local fault type identification provided by the phase selector together with information received from the remote terminal.

The scheme generates output operands (DIR BLOCK TX INIT and DIR BLOCK TX1 STOP through DIR BLOCK TX4 STOP) that control the transmission of signals to the remote end(s). When used with telecommunications facilities, assign the output operands to operate output contacts connected to key the transmitter at the interface.

The output operands from the scheme (DIR BLOCK A, B, C, and 3P) must be configured to interface with other relay functions, output contacts in particular, in order to make the scheme fully operational. Typically, you program the output operand to initiate a trip, breaker fail, and autoreclose, and drive a user-programmable LED as per user application.

When used in conjunction with the trip output element, the scheme is pre-configured to initiate trip, breaker fail, and single-pole autoreclose actions.

BLOCK SCHEME BLOCK — This setting allows the user to assign any FlexLogic operand to block the scheme. Contact inputs from a pilot cut-out switch are typically used for this purpose.

BLOCK RX CO-ORD PKP DELAY — This setting defines a delay for the forward-looking protection elements used by the scheme for coordination with the blocking response from the remote end(s). In this setting, include both the response time of the protection elements used to establish a blocking signal and the total transmission time of that signal including the relay communications equipment interfacing and the communications channel itself.

TRANS BLOCK PICKUP DELAY — This setting defines a transient blocking mechanism embedded in the blocking scheme for coping with the exposure of both the over-reaching zone 2 and ground directional overcurrent function to current reversal conditions.

The transient blocking logic applies to the send path only. Identifying the fault as a reverse fault establishes the blocking signal. If the reverse fault condition prevails for **TRANS BLOCK PICKUP DELAY**, the blocking operation is extended by the transient blocking timer for **TRANS BLOCK RESET DELAY**. This allows riding through current reversal conditions. However, if zone 1 picks up during the transient blocking condition, the blocking action is removed. This is done to cope with evolving faults when an external fault is followed by an internal fault. Without the zone 1 feedback, the trip is unnecessarily delayed.

Do not set the **TRANS BLOCK PICKUP DELAY** longer than the fastest possible trip time for faults on an adjacent line so that the extended blocking action can be established. Take into account the pickup time of the reverse-looking elements of the scheme. Do not set the delay too short, in order to avoid locking up a spurious reverse fault indication that can occur during internal fault conditions.

TRANS BLOCK RESET DELAY — This setting defines a transient blocking mechanism embedded in the blocking scheme for coping with the exposure of the overreaching protection functions to current reversal conditions (see also the **TRANS BLOCK PICKUP DELAY**).

Set this delay long enough to cope with transient conditions including not only current reversals but also spurious negative and zero-sequence currents occurring during breaker operations (in the case when neutral directional or negative-sequence directional overcurrent functions are used). Consider breaker failure time of the surrounding protection systems within the reach of the ground directional function used by the blocking scheme, to make sure that the ground directional function is not jeopardized during delayed breaker operations.

BLOCK SCHEME SEAL-IN DELAY — The output FlexLogic operand (DIR BLOCK OP) is produced according to the Blocking scheme logic. The **BLOCK SCHEME SEAL-IN DELAY** defines a minimum guaranteed duration of the DIR BLOCK OP pulse. As this operand runs the Trip Table of the Blocking scheme, the trip operands DIR BLOCK TRIP A, B, C, and 3P are sealed-in for the same period of time.

GND DIR O/C FWD — This setting defines the FlexLogic operand (if any) of a protection element used in addition to zone 2 for identifying faults on the protected line, and thus, for initiating operation of the scheme. Good directional integrity is the key requirement for an over-reaching forward-looking protection element used as **GND DIR O/C FWD**.

Even though any FlexLogic operand can be used as **GND DIR O/C FWD** enabling the user to combine responses of various protection elements or to apply extra conditions through FlexLogic equations, this extra signal is primarily meant to be the output operand from either the negative-sequence directional or neutral directional overcurrent elements. Both these elements have separate forward (FWD) and reverse (REV) output operands.

The forward indication is used (**NEG SEQ DIR OC1 FWD** or **NEUTRAL DIR OC1 FWD**). Coordinate the selected protection element (or elements in combination) with the selection of G**ND DIR O/C REV**. For all the forward external faults seen by an element used as **GND DIR O/C FWD** at one end of the line, the reverse-looking element used as **GND DIR O/C REV** at the other end picks up and provides a blocking signal. For greater security and to overcome spurious directional element operation during transients, adding at least 0.5 cycles of pickup delay to the forward directional element is recommended.

GND DIR O/C REV — This setting defines the FlexLogic operand (if any) of a protection element that is used in addition to zone 4 for identifying reverse faults, and thus, for initiating the blocking signal. Either reverse-looking directional or non-directional overcurrent protection element can be used as **GND DIR O/C REV**.

Even though any FlexLogic operand can be used as **GND DIR O/C REV**, enabling the user to combine responses of various protection elements or to apply extra conditions through FlexLogic equations, this extra signal is primarily meant to be the output operand from either the negative-sequence directional, neutral directional, or a non-directional instantaneous overcurrent element.

Consider the selected protection element (or elements in combination) with the selection of **GND DIR O/C FWD**. For all the forward external faults seen by an element used as **GND DIR O/C FWD** at one end of the line, the reverse-looking element used as **GND DIR O/C REV** at the other end should picks up and provides a blocking signal. For greater security and to overcome spurious directional element operation during transients, adding a pickup delay greater than the pilot channel delay to the reverse directional element is recommended.

BLOCK SCHEME NO OF COMM BITS — This setting specifies the number of bits of the communications channel available for the scheme. With only one bit available, the scheme sends the blocking signal by asserting the DIR BLOCK TX INIT FlexLogic operand. Use this operand to start the channel (set the blocking signal). On internal faults, the scheme removes the blocking signal by asserting the DIR BLOCK TX1 FlexLogic operand.

For tripping the scheme responds to lack of the blocking signal on bit 1 (**BLOCK SCHEME RX1** setting). The scheme uses only local fault type identification provided by the phase selector to assert the output operands DIR BLOCK TRIP A, B, C, and 3P.

To take advantage of the four-bit blocking scheme, initiate the blocking signals from a disturbance detector. This can be accomplished by using both 50DD and DIR BLOCK TX INIT to assert the blocking signal. Subsequently, specific bits are de-asserted by the scheme based on the phase selection providing the peer relay with more information on the fault type. Otherwise, the peer relay issues a three-pole trip upon receiving the bit pattern (0, 0, 0, 0).

BLOCK SCHEME RX1 through **BLOCK SCHEME RX4** — These settings allow the user to select the FlexLogic operands that represent the receive signals for the scheme. Typically input contacts interfacing with a signaling system are used. In single-bit applications, **BLOCK SCHEME RX1** must be used. In two-bit applications, **BLOCK SCHEME RX1** and **BLOCK SCHEME RX2** must be used. In four-bit applications, **BLOCK SCHEME RX1**, **BLOCK SCHEME RX2**, **BLOCK SCHEME RX3**, and **BLOCK SCHEME RX4** must be used.

Figure 5-223: Directional blocking scheme logic

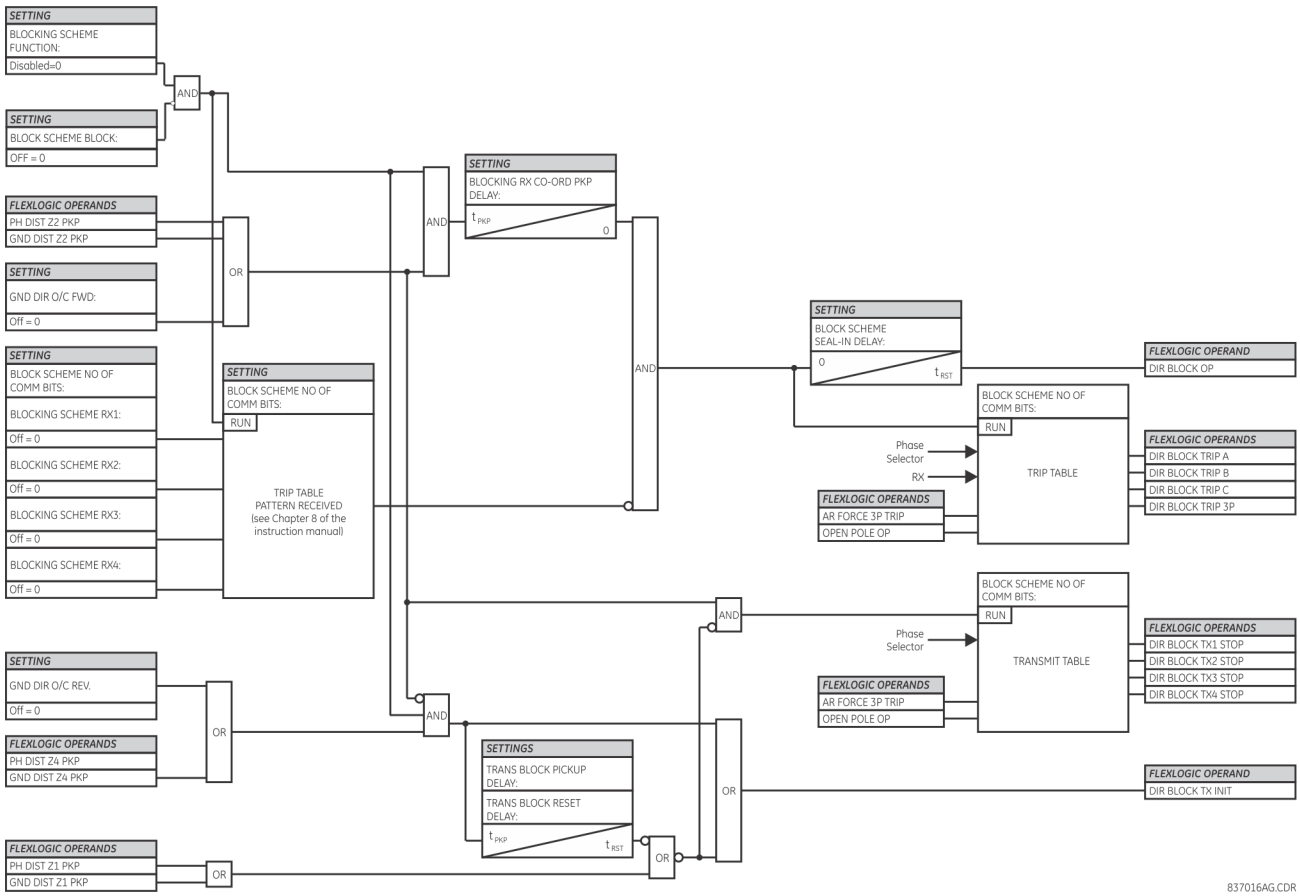

5.8.12.8 Directional comparison blocking 1

SETTINGS ⇨⇩ CONTROL ELEMENTS ⇨⇩ PILOT SCHEMES ⇨⇩ BLOCKING1 SCHEME

■ BLOCKING1 SCHEME ■	⇔	BLOCKING1 SCHEME FUNCTION: Disabled	Range: Disabled, Enabled
	⇩	BLOCK1 SCHEME BLOCK: Off	Range: FlexLogic operand
	⇩	BLOCK1 RX CO-ORD PKP DELAY: 0.010 s	Range: 0.000 to 65.535 s in steps of 0.001
	⇩	TRANS BLOCK1 PICKUP DELAY: 0.030 s	Range: 0.000 to 65.535 s in steps of 0.001
	⇩	TRANS BLOCK1 RESET DELAY: 0.090 s	Range: 0.000 to 65.535 s in steps of 0.001
	⇩	BLOCK1 SCHEME SEAL-IN DELAY: 0.010 s	Range: 0.000 to 65.535 s in steps of 0.001
	⇩	BLK1 SCHME DIR FWD1: Off	Range: FlexLogic operand
		⇩	
	⇩	BLK1 SCHME DIR FWD3: Off	Range: FlexLogic operand
	⇩	BLK1 SCHME DIR REV1: Off	Range: FlexLogic operand
		⇩	
	⇩	BLK1 SCHME DIR REV3: Off	Range: FlexLogic operand
	⇩	BLK1 FORCE TX STOP1: Off	Range: FlexLogic operand
	⇩	BLK1 FORCE TX STOP2: Off	Range: FlexLogic operand
	⇩	BLOCK1 SCHEME NO OF COMM BITS: 1	Range: 1, 2, or 4
	⇩	BLOCK1 SCHEME RX1: Off	Range: FlexLogic operand
		⇩	
	⇩	BLOCK1 SCHEME RX4: Off	Range: FlexLogic operand
	⇩	BLOCK1 SCHEME TARGET: Self-Reset	Range: Self-Reset, Latched, Disabled
	⇧	BLOCK1 SCHEME EVENTS: Disabled	Range: Disabled, Enabled

The Directional Comparison Blocking1 (DCB1) scheme operates the same way as the Directional Comparison Blocking (DCB) scheme, except hard-coded connections to phase and ground distance elements are removed to allow the user to choose FlexLogic operands to identify forward or reverse direction fault, such as ground OC directional elements for example. This gives the user more flexibility and better coordination when employing this scheme.

Settings description and application guidance for DCB scheme apply to DCB1 scheme with the following exceptions.

BLK1 SCHME DIR FWD1-3 — Each setting defines the FlexLogic operand of a protection element for identifying forward faults on the protected line, and thus, for initiating operation of the scheme. Good directional integrity is the key requirement for an over-reaching forward-looking protection element.

Even though any FlexLogic operand can be used as **BLK1 SCHME DIR FWD** enabling the user to combine responses of various protection elements or to apply extra conditions through FlexLogic equations, **BLK1 SCHME DIR FWD** entries are primarily meant to be the output operand from the Negative-Sequence Directional FWD IOC, Neutral Directional FWD IOC, and the forward-looking distance over-reaching elements.

BLK1 SCHME DIR REV1-3 — This setting defines the FlexLogic operand of a protection element that is used for identifying reverse faults, and thus, for initiating the blocking signal. Reverse-looking directional overcurrent protection elements or reverse-looking distance elements can be used as **BLK1 SCHME DIR REV**.

Even though any FlexLogic operand can be used as **BLK1 SCHME DIR REV** enabling the user to combine responses of various protection elements or to apply extra conditions through FlexLogic equations, **BLK1 SCHME DIR REV** entries are primarily meant to be the output operand from the Negative-Sequence Directional REV IOC, Neutral Directional REV IOC, non-directional IOC, or reverse-looking distance elements.

Coordinate the selected protection element (or elements in combination) with the selection of DIR FWD. For all the forward external faults seen by an element used as **BLK1 SCHME DIR FWD** at one end of the line, the reverse-looking element used as **BLK1 SCHME DIR REV** at the other end picks up and provides a blocking signal.

BLK1 FORCE TX STOP1-2 — This setting defines the FlexLogic operand of a protection element that is used for identifying internal faults on the protected line, and thus, for stopping the blocking signal. Typically forward-looking under-reach distance elements are used as **BLK1 FORCE TX STOP**.

Figure 5-224: Directional comparison blocking1 scheme logic

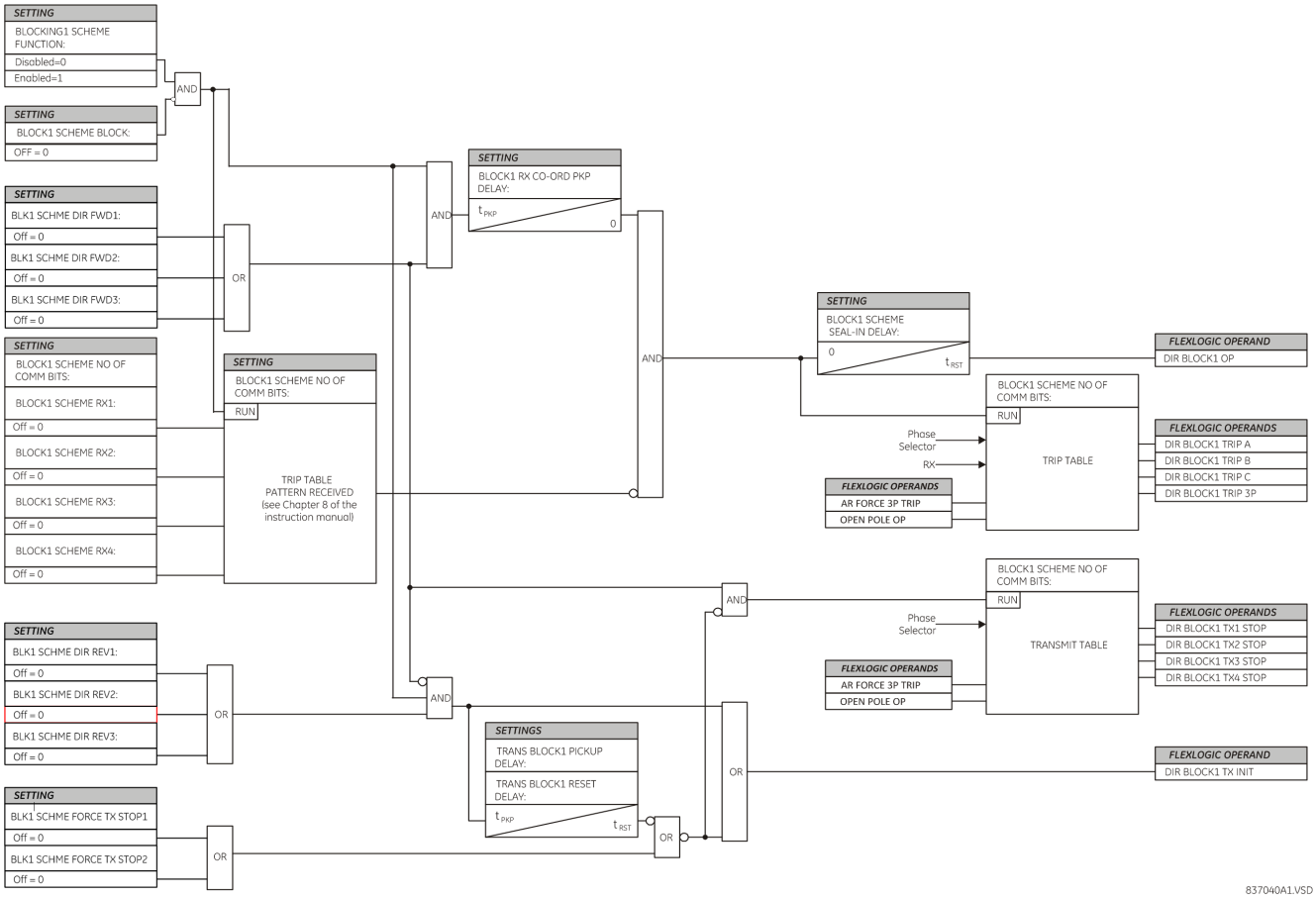

5.8.12.9 Directional comparison unblocking

SETTINGS ⇨⇩ CONTROL ELEMENTS ⇨⇩ PILOT SCHEMES ⇨⇩ DCUB SCHEME

■ **DCUB SCHEME** ■	⇔	**DCUB SCHEME** **FUNCTION: Disabled**	Range: Disabled, Enabled

⇕	**DCUB BLOCK: Off**	Range: FlexLogic operand
⇕	**DCUB PERMISSIVE ECHO: Disabled**	Range: Disabled, Enabled, Custom
⇕	**DCUB ECHO COND: Off**	Range: FlexLogic operand
⇕	**GND DIR O/C FWD: Off**	Range: FlexLogic operand
⇕	**GND DIR O/C REV: Off**	Range: FlexLogic operand
⇕	**TRANS BLOCK PICKUP DELAY: 0.020 s**	Range: 0 to 65.535 s in steps of 0.001
⇕	**TRANS BLOCK RESET DELAY: 0.090 s**	Range: 0 to 65.535 s in steps of 0.001
⇕	**ECHO DURATION: 0.100 s**	Range: 0 to 65.535 s in steps of 0.001
⇕	**ECHO LOCKOUT: 0.250 s**	Range: 0 to 65.535 s in steps of 0.001
⇕	**LINE END OPEN PICKUP DELAY: 0.050 s**	Range: 0 to 65.535 s in steps of 0.001
⇕	**DCUB LOG PICKUP DELAY: 0.008 s**	Range: 0 to 65.535 s in steps of 0.001
⇕	**GUARD HEALTHY RESET DELAY: 0.015 s**	Range: 0 to 65.535 s in steps of 0.001
⇕	**DCUB LOG TRIP WINDOW: 0.150 s**	Range: 0 to 65.535 s in steps of 0.001
⇕	**DCUB SEAL-IN DELAY: 0.010 s**	Range: 0 to 65.535 s in steps of 0.001
⇕	**DCUB NO OF COMM BITS: 1**	Range: 1, 2, or 4
⇕	**DCUB RX1: Off**	Range: FlexLogic operand
⇕	**DCUB LOG1: Off**	Range: FlexLogic operand
⇕	**DCUB RX2: Off**	Range: FlexLogic operand
⇕	**DCUB LOG2: Off**	Range: FlexLogic operand
⇕	**DCUB RX3: Off**	Range: FlexLogic operand
⇕	**DCUB LOG3: Off**	Range: FlexLogic operand
⇕	**DCUB RX4: Off**	Range: FlexLogic operand
⇕	**DCUB LOG4: Off**	Range: FlexLogic operand
⇕	**DCUB SCHEME TARGET: Self-reset**	Range: Self-Reset, Latched, Disabled

⇧ **DCUB SCHEME EVENT: Disabled** Range: Disabled, Enabled

This menu allows selecting and setting up protection signaling of the directional comparison unblocking scheme. This scheme is available for single-pole tripping applications and can be used with one, two, or four bit communications channels. Choices of communications channel include remote inputs/outputs and telecommunications interfaces.

Generally, this scheme uses an over-reaching zone 2 distance element to compare the direction to a fault at all terminals of the line. Ground directional overcurrent functions available in the relay can be used in conjunction with the zone 2 distance element to key the scheme and initiate its operation. This increases the coverage for high-resistance faults.

The scheme is for two or three-terminal applications. As a long reach of the overreaching distance element can be required for three-terminal applications, transient blocking logic is provided for both distance and ground directional overcurrent elements. An echo feature is made available to cope with line open conditions.

By default, the scheme uses the reverse-looking zone 4 distance element to identify reverse faults. Additionally, reverse-looking ground directional overcurrent functions can be used in conjunction with the zone 4.

For proper operation of the scheme, the zone 2 and 4 phase and ground distance elements must be enabled, configured, and set per rules of distance relaying. Enable the line pickup element, configure it, and set it to detect line-end-open conditions. If used by this scheme, the selected ground directional overcurrent function(s) must be enabled, configured, and set accordingly.

In single-pole tripping applications, the scheme uses local fault type identification provided by the phase selector together with information received from the remote terminal. The scheme generates output operands (DCUB TX1 through DCUB TX4) that are used to transmit the signal to the remote terminal(s). The directional comparison unblocking scheme was developed for use with frequency shift keying communications channels, though different telecommunications interfaces can be used (for example, digital communication channels utilizing the L90 teleprotection input/outputs).

To make the scheme fully operational as a stand-alone feature, the scheme output operands must be configured to interface with other relay functions, output contacts in particular. Typically, you program the output operands to initiate a trip, breaker fail, and autoreclose, and drive a user-programmable LED as per the intended application.

When used in conjunction with the trip output element, the scheme is pre-configured to initiate trip, breaker fail, and autoreclose actions.

DCUB BLOCK — This setting allows the user to assign any FlexLogic operand to block the scheme. Contact inputs from a pilot cut-out switch are typically used for this purpose.

DCUB PERMISSIVE ECHO — Enabling this setting sends a permissive echo signal to the remote end(s) under certain conditions (see the logic diagram for details). If set to "Custom", the echo signal is sent if a condition selected with the **DCUB ECHO COND** setting is satisfied. The echo is sent only once and then the echo logic locks out for the time specified by the **ECHO LOCKOUT** setting. The duration of the echo pulse is programmable by the **ECHO DURATION** setting. The echo is returned only if no overreaching and reverse protection elements operate.

DCUB ECHO COND — This setting specifies a user-selected echo condition and applies if the **DCUB PERMISSIVE ECHO** setting is "Custom".

GND DIR O/C FWD — This setting defines the FlexLogic operand (if any) of a protection element used in addition to zone 2 for identifying faults on the protected line, and thus, for keying the communication channel(s) and initiating operation of the scheme (both through the transient blocking logic).

Good directional integrity is the key requirement for an over-reaching forward-looking protection element set as **GND DIR O/C FWD**. Even though any FlexLogic operand can be set as **GND DIR O/C FWD**, thereby enabling the user to combine responses of various protection elements or to apply extra conditions through FlexLogic equations, this extra signal is primarily meant to be the output operand from either the negative-sequence directional or neutral directional overcurrent elements. As both these elements have separate forward and reverse output operands, use the forward indication (that is, NEG SEQ DIR OC1 FWD or NEUTRAL DIR OC1 FWD).

Coordinate the selected protection element (or elements in combination) with the selection of **GND DIR O/C REV**. For all forward external faults seen by an element set as **GND DIR O/C FWD** at one end of the line, the reverse-looking element set as **GND DIR O/C REV** at the other end picks up and provides a blocking signal. For greater security and to overcome spurious directional element operation during transients, adding at least 0.5 cycles of pickup delay to the forward directional element is recommended.

GND DIR O/C REV — This setting defines the FlexLogic operand (if any) of a protection element used in addition to zone 4 for identifying reverse faults, and thus, for stopping the transmit signal and initiating the transient blocking timer.

Good directional integrity is the key requirement for a reverse-looking protection element set as **GND DIR O/C REV**. Even though any FlexLogic operand can be set as **GND DIR O/C REV**, thereby enabling the user to combine responses of various protection elements or to apply extra conditions through FlexLogic equations, this extra signal is primarily meant to be the output operand from either the negative-sequence directional or neutral directional overcurrent element. As both these elements have separate forward and reverse output operands, use the reverse indication (that is, NEG SEQ DIR OC1 REV or NEUTRAL DIR OC1 REV).

Coordinate the selected protection element (or elements in combination) with the selection of **GND DIR O/C FWD**. For all the forward external faults seen by an element set as **GND DIR O/C FWD** at one end of the line, the reverse-looking element set as **GND DIR O/C REV** at the other end picks up and provides a blocking signal. For greater security and to overcome spurious directional element operation during transients, adding a pickup delay greater than the pilot channel delay to the reverse directional element is recommended.

TRANS BLOCK PICKUP DELAY — This setting defines a transient blocking mechanism embedded in the directional comparison unblocking scheme for coping with the exposure of both the over-reaching zone 2 and ground directional overcurrent function to current reversal conditions.

The transient blocking logic applies to both operate (trip) and send (transmit) paths. Identifying the fault as a reverse fault prevents the scheme from both operating and keying the channel. If the reverse fault condition prevails for **TRANS BLOCK PICKUP DELAY** value, the blocking operation is extended by the transient blocking timer for the **TRANS BLOCK RESET DELAY** value. This allows riding through current reversal conditions.

However, if distance zone 1 picks up during the transient blocking condition, the blocking action is removed. This is to cope with evolving faults when an external fault is followed by an internal fault. Without the zone 1 feedback, the trip is delayed unnecessarily.

Do not set the **TRANS BLOCK PICKUP DELAY** longer than the fastest possible trip time for faults on an adjacent line so that extended blocking action can be established. Take into account the pickup time of the reverse-looking elements of the scheme. To avoid locking up a spurious reverse fault indication that can occur during internal fault conditions, do not set the delay defined by this setting too short.

TRANS BLOCK RESET DELAY — This setting defines a transient blocking mechanism embedded in the directional comparison unblocking scheme for coping with the exposure of the overreaching protection functions to current reversal conditions (see also the previous **TRANS BLOCK PICKUP DELAY** setting).

Set this delay long enough to cope with transient conditions including not only current reversals but also spurious negative and zero-sequence currents occurring during breaker operations (in the case when neutral directional or negative-sequence directional overcurrent functions are used). Consider the breaker failure time of the surrounding protection systems within the reach of the ground directional function used by the directional comparison unblocking scheme, to make sure that the ground directional function is not jeopardized during delayed breaker operations.

ECHO DURATION — This setting defines the guaranteed and exact duration of the echo pulse. The duration does not depend on the duration and shape of the received RX signals. This setting enables the relay to avoid a permanent lock-up of the transmit/receive loop.

ECHO LOCKOUT — This setting defines the lockout period for the echo logic after sending the echo pulse. This setting enables the relay to avoid oscillations of the echo pulses during an autoreclosure dead-time after clearing an internal fault.

LINE END OPEN PICKUP DELAY — This setting defines the pickup value for validation of the line end open conditions as detected by the line pickup logic via the LINE PICKUP LEO PKP FlexLogic operand. The validated line end open condition is a requirement for the directional comparison unblocking scheme to return a received echo signal (if the echo feature is enabled).

When selecting this delay value, take into account the principle of operation and settings of the line pickup element, which should thus be enabled.

DCUB LOG PICKUP DELAY — This setting represents the directional comparison unblocking duration time delay. It is the amount of time that the loss-of-guard without receipt of permissive trip must be present before the logic provides permission to operate if a forward fault is detected. It is set relatively short, but long enough to ride through the transition period of loss-of-guard with the receipt of a permissive signal that occurs with a normal trip. Typical setting values are from 4 to 32 ms. For most cases, a value of 8 ms can be used.

The tripping or unblocking window for loss-of-guard without permission is the difference between the **DCUB LOG TRIP WINDOW** and **DCUB LOG PICKUP DELAY** timers. For the default settings, this difference is 150 – 8 = 142 ms and occurs 8 ms after loss-of-guard was received, when the **DCUB LOG PICKUP DELAY** timer has timed out. During this interval, the scheme has permission to operate if a forward fault is sensed, and no reverse faults or transient blocking.

GUARD HEALTHY RESET DELAY — This setting represents the guard healthy security time delay. It is the time after the channel is restored that the guard signal must be present before the directional comparison unblocking scheme is put back in service. This reset timer allows the scheme to ride through any chattering in the channel. Typical values are from 100 to 500 ms, with a value of 150 ms commonly used.

DCUB LOG TRIP WINDOW — This setting represents the directional comparison unblocking lockout time delay. It is the amount of time from when any loss-of-guard signal is received until the directional comparison unblocking scheme is locked out without the presence of any RX1 to RX4 receive signal or any forward element. This timer seals-in when it expires, creating a blocking signal for all scheme functions and disabling the scheme until the guard signal is restored and the **GUARD HEALTHY RESET DELAY** timer expires. Typical values for this setting are from 160 to 180 ms; for most cases, a setting of about 150 ms can be used.

DCUB SEAL-IN DELAY — The output FlexLogic operand (DCUB OP) is produced according to the directional comparison unblocking scheme logic. The **DCUB SEAL-IN DELAY** defines a minimum guaranteed duration of the DCUB OP pulse. As this operand runs the trip table of the directional comparison unblocking scheme, the DCUB TRIP A, DCUB TRIP B, DCUB TRIP C, and DCUB TRIP 3P trip operands are sealed-in for the same period of time.

DCUB NO OF COMM BITS — This setting specifies the number of bits available on the communications channel for the scheme. With only one bit available, the scheme sends the direct under-reaching transfer trip command on bit 1 (DCUB TX1 operand) and responds to the direct trip command received on bit 1 (**DCUB RX1** setting). The scheme uses only local fault type identification provided by the phase selector to assert the DCUB TRIP A, DCUB TRIP B, DCUB TRIP C, and DCUB TRIP 3P output operands.

DCUB RX1 through **DCUB RX4** — These settings allow the user to select the FlexLogic operands to represent the permission receive signals for the scheme. Contact inputs interfacing with a signaling system(s) are typically used. These settings must be used in conjunction with the loss-of-guard signals, otherwise the scheme does not unblock and thus fails to operate.

In single-bit applications, **DCUB RX1** must be used. In two-bit applications, **DCUB RX1** and **DCUB RX2** must be used. In four-bit applications, **DCUB RX1**, **DCUB RX2**, **DCUB RX3**, and **DCUB RX4** must be used.

DCUB LOG1 through **DCUB LOG4** — These settings allow the user to select the FlexLogic operands to represent the loss-of-guard receive signals for the scheme. Contact inputs interfacing with a signaling system(s) are typically used. Each loss-of-guard signal must correspond to the same receive signal from the same communications channel (that is, RX1 and LOG1 must be from the same communications channel, and the same for channels 2, 3 and 4, if used).

In single-bit applications, **DCUB RX1** and **DCUB LOG1** must be used. In two-bit applications, **DCUB RX1** with **DCUB LOG1** and **DCUB RX2** with **DCUB LOG2** must be used. In four-bit applications, all receive and loss-of-guard signals must be used.

Figure 5-225: Directional comparison unblocking scheme logic

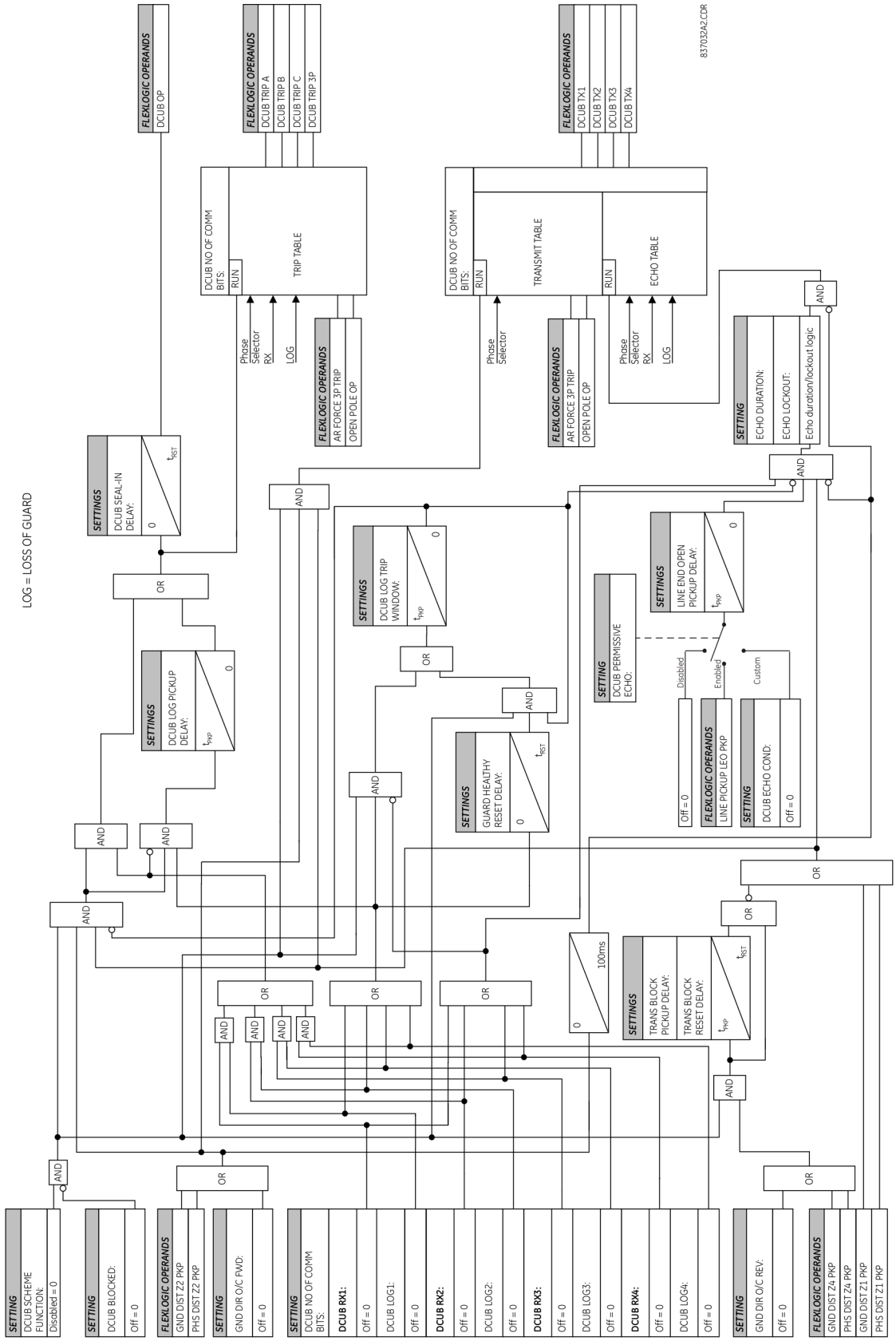

5.8.13 Autoreclose (ANSI 79)

SETTINGS ⇨⇩ CONTROL ELEMENTS ⇨⇩ AUTORECLOSE

■ AUTORECLOSE ■	⇔	AR FUNCTION: Disabled	Range: Disabled, Enabled
	⇕	AR MODE: Mode 1 (1 & 3 Pole)	Range: Mode 1 (1 & 3 Pole), Mode 2 (1 Pole), Mode 3 (3 Pole-A), Mode 4 (3 Pole-B)
	⇕	Mode 1 Activation: Off	Range: FlexLogic operand
	⇕	Mode 2 Activation: Off	Range: FlexLogic operand
	⇕	Mode 3 Activation: Off	Range: FlexLogic operand
	⇕	Mode 4 Activation: Off	Range: FlexLogic operand
	⇕	AR MAX NUMBER OF SHOTS: 2	Range: 1, 2, 3, 4
	⇕	AR INITIATE MODE: Protection AND CB	Range: Protection AND CB, Protection Only
	⇕	AR BLOCK BKR1: Off	Range: FlexLogic operand
	⇕	AR CLOSE TIME BKR 1: 0.10 s	Range: 0.1 to 655.35 s in steps of 0.01
	⇕	AR BKR MAN CLOSE: Off	Range: FlexLogic operand
	⇕	AR BLK TIME UPON MAN CLS: 10.00 s	Range: 0.00 to 655.35 s in steps of 0.01
	⇕	AR 1P INIT: Off	Range: FlexLogic operand
	⇕	AR 3P INIT: Off	Range: FlexLogic operand
	⇕	AR 3P TD INIT: Off	Range: FlexLogic operand
	⇕	AR MULTI-P FAULT: Off	Range: FlexLogic operand
	⇕	BKR ONE POLE OPEN: Off	Range: FlexLogic operand
	⇕	BKR 3 POLE OPEN: Off	Range: FlexLogic operand
	⇕	AR 3-P DEAD TIME 1: 0.50 s	Range: 0.00 to 655.35 s in steps of 0.01
	⇕	AR 3-P DEAD TIME 2: 1.20 s	Range: 0.00 to 655.35 s in steps of 0.01
	⇕	AR 3-P DEAD TIME 3: 2.00 s	Range: 0.00 to 655.35 s in steps of 0.01
	⇕	AR 3-P DEAD TIME 4: 4.00 s	Range: 0.00 to 655.35 s in steps of 0.01
	⇕	AR EXTEND DEAD T 1: Off	Range: FlexLogic operand

⇕	**AR DEAD TIME 1 EXTENSION: 0.50 s**	Range: 0.00 to 655.35 s in steps of 0.01
⇕	**AR RESET: Off**	Range: FlexLogic operand
⇕	**AR RESET TIME: 60.00 s**	Range: 0 to 655.35 s in steps of 0.01
⇕	**AR BKR CLOSED: Off**	Range: FlexLogic operand
⇕	**AR BLOCK: Off**	Range: FlexLogic operand
⇕	**AR PAUSE: Off**	Range: FlexLogic operand
⇕	**AR INCOMPLETE SEQ TIME: 5.00 s**	Range: 0 to 655.35 s in steps of 0.01
⇕	**AR BLOCK BKR2: Off**	Range: FlexLogic operand
⇕	**AR CLOSE TIME BKR2: 0.10 s**	Range: 0.1 to 655.35 s in steps of 0.01
⇕	**AR TRANSFER 1 TO 2: No**	Range: Yes, No
⇕	**AR TRANSFER 2 TO 1: No**	Range: Yes, No
⇕	**AR BKR1 FAIL OPTION: Continue**	Range: Continue, Lockout
⇕	**AR BKR2 FAIL OPTION: Continue**	Range: Continue, Lockout
⇕	**AR 1-P DEAD TIME: 1.00 s**	Range: 0 to 655.35 s in steps of 0.01
⇕	**AR BKR SEQUENCE: 1-2**	Range: 1, 2, 1&2, 1–2, 2–1
⇕	**AR TRANSFER TIME: 4.00 s**	Range: 0 to 655.35 s in steps of 0.01
⇕	**AR BUS FLT INIT: Off**	Range: FlexLogic operand
⇧	**AR EVENT: Disabled**	Range: Enabled, Disabled

The autoreclose scheme is intended for use on transmission lines with circuit breakers operated in both the single pole and three pole modes, in one or two breaker arrangements. The autoreclose scheme provides four programs with different operating cycles, depending on the fault type. Each of the four programs can be set to trigger up to four reclosing attempts. The second, third, and fourth attempts always perform three-pole reclosing and have independent dead time delays.

When used in two breaker applications, the reclosing sequence is selectable. The reclose signal can be sent to one selected breaker only, to both breakers simultaneously or to both breakers in sequence (one breaker first and then, after a delay to check that the reclose was successful, to the second breaker). When reclosing in sequence, the first breaker should reclose with either the single-pole or three-pole dead time according to the fault type and reclose mode; the second breaker should follow the successful reclosure of the first breaker. When reclosing simultaneously, for the first shot both breakers should reclose with either the single-pole or three-pole dead time, according to the fault type and the reclose mode.

The signal used to initiate the autoreclose scheme is the trip output from protection. This signal can be single pole tripping for single phase faults and three phase tripping for multi-phase faults. The autoreclose scheme has five operating states.

Table 5-43: Autoreclose states

State	Characteristic
Enabled	Scheme is permitted to operate
Disabled	Scheme is not permitted to operate
Reset	Scheme is permitted to operate and shot count is reset to 0
Reclose in progress	Scheme has been initiated but the reclose cycle is not finished (successful or not)
Lockout	Scheme is not permitted to operate until reset received

Autoreclose programs

The autorecloser provides four programs that can cause from one to four reclose attempts (shots). After the first shot, all subsequent recloses are always three-pole. If the maximum number of shots selected is "1" (only one reclose attempt) and the fault is persistent, after the first reclose the scheme goes to lockout upon another Initiate signal.

For the three-pole reclose programs (modes 3 and 4), an AR FORCE 3-P FlexLogic operand is set. This operand can be used in connection with the tripping logic to cause a three-pole trip for single-phase faults.

Table 5-44: Autoreclose programs

Mode	Autoreclose mode	First shot		Second shot		Third shot		Fourth shot	
		Single-phase fault	Multi-phase fault	Single-phase fault	Multi-phase fault	Single-phase fault	Multi-phase fault	Single-phase fault	Multi-phase fault
1	1 & 3 Pole	1 Pole	3 Pole	3 Pole or Lockout	3 Pole or Lockout	3 Pole or Lockout	3 Pole or Lockout	3 Pole or Lockout	3 Pole or Lockout
2	1 Pole	1 Pole	Lockout	3 Pole or Lockout	3 Pole or Lockout	3 Pole or Lockout	3 Pole or Lockout	3 Pole or Lockout	3 Pole or Lockout
3	3 Pole-A	3 Pole	Lockout	3 Pole or Lockout	Lockout	3 Pole or Lockout	Lockout	3 Pole or Lockout	Lockout
4	3 Pole-B	3 Pole	3 Pole	3 Pole or Lockout	3 Pole or Lockout	3 Pole or Lockout	3 Pole or Lockout	3 Pole or Lockout	3 Pole or Lockout

The four autoreclose modes are described as follows:

- **1 & 3 Pole** — In this mode, the autorecloser starts the **AR 1-P DEAD TIME** timer for the first shot if the autoreclose is single-phase initiated, the **AR 3-P DEAD TIME 1** timer if the autoreclose is three-pole initiated, and the **AR 3-P DEAD TIME 2** timer if the autoreclose is three-phase time delay initiated. If two or more shots are enabled, the second, third, and fourth shots are always three-pole and start the **AR 3-P DEAD TIME 2(4)** timers.
- **1 Pole** — In this mode, the autorecloser starts the **AR 1-P DEAD TIME** for the first shot if the fault is single phase. If the fault is three-phase or a three-pole trip on the breaker occurred during the single-pole initiation, the scheme goes to lockout without reclosing. If two or more shots are enabled, the second, third, and fourth shots are always three-pole and start the **AR 3-P DEAD TIME 2(4)** timers.
- **3 Pole-A** — In this mode, the autorecloser is initiated only for single phase faults, although the trip is three pole. The autorecloser uses the **AR 3-P DEAD TIME 1** for the first shot if the fault is single phase. If the fault is multi phase the scheme goes to Lockout without reclosing. If two or more shots are enabled, the second, third, and fourth shots are always three-phase and start the **AR 3-P DEAD TIME 2(4)** timers.
- **3 Pole-B** — In this mode, the autorecloser is initiated for any type of fault and starts the **AR 3-P DEAD TIME 1** for the first shot. If the initiating signal is **AR 3P TD INIT** the scheme starts **AR 3-P DEAD TIME 2** for the first shot. If two or more shots are enabled, the second, third, and fourth shots are always three-phase and start the **AR 3-P DEAD TIME 2(4)** timers.

Basic reclosing operation

Reclosing operation is determined primarily by the **AR MODE** and **AR BKR SEQUENCE** settings. The reclosing sequences are started by the initiate inputs. A reclose initiate signal sends the scheme into the reclose-in-progress (RIP) state, asserting the AR RIP FlexLogic operand. The scheme is latched into the RIP state and resets only when an AR CLS BKR 1 (autoreclose breaker 1) or AR CLS BKR 2 (autoreclose breaker 2) operand is generated or the scheme goes to the Lockout state.

The dead time for the initial reclose operation is determined by the **AR 1-P DEAD TIME**, **AR 3-P DEAD TIME 1**, or **AR 3-P DEAD TIME 2** setting, depending on the fault type and the mode selected. After the dead time interval the scheme asserts the AR CLOSE BKR 1 or AR CLOSE BKR 2 operands, as determined by the sequence selected. These operands are latched until the breaker closes or the scheme goes to Reset or Lockout.

There are three initiate programs: single pole initiate, three pole initiate, and three pole time delay initiate. Any of these reclose initiate signals start the reclose cycle and set the reclose-in-progress (AR RIP) operand. The reclose-in-progress operand is sealed-in until the Lockout or Reset signal appears.

The three-pole initiate and three-pole time delay initiate signals are latched until the AR CLOSE BKR1, AR CLOSE BKR2, Lockout, or Reset signal appears.

Autoreclose pause

The pause input offers the possibility of freezing the autoreclose cycle until the pause signal disappears. This can be done when a trip occurs and simultaneously or previously, some conditions are detected such as out-of step or loss of guard frequency, or a remote transfer trip signal is received. The pause signal freezes all four dead timers. When the 'pause' signal disappears the autoreclose cycle is resumed by continuing the shot timer it was left at when paused.

This feature can be also used when a transformer is tapped from the protected line and a reclose is not wanted until the transformer is removed from the line. In this case, the reclose scheme is "paused" until the transformer is disconnected. The **AR PAUSE** input forces a three-pole trip through the **3-P DEADTIME 2** path.

Evolving faults

1.25 cycles after the single pole dead time has been initiated, the AR FORCE 3P TRIP operand is set and later resets only when the scheme is reset or goes to Lockout. This approach ensures that when a fault on one phase evolves to include another phase during the single pole dead time of the auto-recloser the scheme forces a three-pole trip and reclose.

Reclosing scheme operation for one breaker

- **Permanent Fault** — Consider Mode 1, which calls for 1-Pole or 3-Pole Time Delay 1 for the first reclosure and 3-Pole Time Delay 2 for the second reclosure, and assume a permanent fault on the line. Also assume the scheme is in the Reset state. For the first single-phase fault the **AR 1-P DEAD TIME** timer is started, while for the first multi-phase fault the **AR 3-P DEAD TIME 1** timer is started. If the **AR 3P TD INIT** signal is high, the **AR 3-P DEAD TIME 2** starts for the first shot.

  If **AR MAX NO OF SHOTS** is set to "1", upon the first reclose the shot counter is set to 1. Upon reclosing, the fault is again detected by protection and reclose is initiated. The breaker is tripped three-pole through the AR SHOT COUNT >0 operand that sets the AR FORCE 3P operand. Because the shot counter has reached the maximum number of shots permitted, the scheme is sent to the Lockout state.

  If **AR MAX NO OF SHOTS** is set to "2", upon the first reclose the shot counter is set to 1. Upon reclosing, the fault is again detected by protection and reclose is initiated. The breaker is tripped three-pole through the AR SHOT COUNT >0 operand that sets the AR FORCE 3P operand. After the second reclose, the shot counter is set to 2. Upon reclosing, the fault is again detected by protection, the breaker is tripped three-pole, and reclose is initiated again. Because the shot counter has reached the maximum number of shots permitted, the scheme is sent to the lockout state.
- **Transient Fault** — When a reclose output signal is sent to close the breaker, the reset timer is started. If the reclosure sequence is successful (there is no initiating signal and the breaker is closed), the reset timer times out, returning the scheme to the reset state with the shot counter set to "0" and making it ready for a new reclose cycle.

Reclosing scheme operation for two breakers

- **Permanent Fault** — The general method of operation is the same as that outlined for the one breaker applications except for the following description, which assumes **AR BKR SEQUENCE** is "1-2" (reclose Breaker 1 before Breaker 2). The signal output from the dead time timers passes through the breaker selection logic to initiate reclosing of Breaker 1. The Close Breaker 1 signal initiates the Transfer Timer. After the reclose of the first breaker, the fault is again detected by the protection, the breaker is tripped three pole and the autoreclose scheme is initiated. The Initiate signal then stops the transfer timer. After the 3-P dead time times out, the Close Breaker 1 signal closes the first breaker again and starts the transfer timer. Since the fault is permanent, the protection trips again initiating the autoreclose scheme that is sent to Lockout by the SHOT COUNT = MAX signal.

- **Transient Fault** — When the first reclose output signal is sent to close Breaker 1, the reset timer starts. The close Breaker 1 signal initiates the transfer timer that times out and sends the close signal to the second breaker. If the reclosure sequence is successful (both breakers closed and there is no initiating signal), the reset timer times out, returning the scheme to the reset state with the shot counter set to 0. The scheme is ready for a new reclose cycle.

AR BKR1(2) reclose fail

If the selected sequence is "1–2" or "2–1" and after the first or second reclose attempt the breaker fails to close, there are two options. If the **AR BKR 1(2) FAIL OPTION** is set to "Lockout," the scheme goes to lockout state. When it is set to "Continue," the reclose process continues with Breaker 2. At the same time the shot counter is decreased (since the closing process was not completed).

Scheme reset after reclosure

When a reclose output signal is sent to close either breaker 1 or 2, the reset timer is started. If the reclosure sequence is successful (there is no initiating signal and the breakers are closed), the reset timer times out, returning the scheme to the reset state, with the shot counter set to 0, making it ready for a new reclose cycle.

In two breaker schemes, if one breaker is in the out-of-service state and the other is closed at the end of the reset time, the scheme also resets. If at the end of the reset time at least one breaker, which is not in the out-of-service state, is open the scheme is sent to Lockout.

The reset timer is stopped if the reclosure sequence is not successful: an initiating signal present or the scheme is in Lockout state. The reset timer is also stopped if the breaker is manually closed or the scheme is otherwise reset from lockout.

Lockout

When a reclose sequence starts by an initiate signal, the scheme moves into the reclose-in-progress state and starts the incomplete sequence timer. The setting of this timer determines the maximum time interval allowed for a single reclose shot. If a close breaker 1 or 2 signal is not present before this time expires, the scheme goes to "Lockout".

There are four other conditions that can take the scheme to the Lockout state, as follows:

- Receipt of 'Block' input while in the reclose-in-progress state
- The reclosing program logic — When a 3P Initiate is present and the autoreclose mode is either 1 Pole or 3Pole-A (3 pole autoreclose for single pole faults only)
- Initiation of the scheme when the count is at the maximum allowed
- If at the end of the reset time at least one breaker, which is not in the out-of-service state, is open the scheme is sent to Lockout. The scheme is also sent to Lockout if one breaker fails to reclose and the setting **AR BKR FAIL OPTION** is set to "Lockout".

Once the Lockout state is set, it is latched until one or more of the following occurs:

- The scheme is intentionally reset from Lockout, employing the Reset setting of the Autorecloser
- The Breaker(s) is(are) manually closed from panel switch, SCADA, or other remote control through the **AR BRK MAN CLOSE** setting;
- 10 seconds after breaker control detects that breaker(s) were closed

Breaker open before fault

A logic circuit is provided that inhibits the close breaker 1 and close breaker 2 outputs if a reclose initiate (RIP) indicator is not present within 30 ms of the Breaker Any Phase Open input. This feature is intended to prevent reclosing if one of the breakers was open in advance of a reclose initiate input to the recloser. This logic circuit resets when the breaker is closed.

Transfer reclose when breaker is blocked

- When the reclosing sequence 1-2 is selected and Breaker 1 is blocked (AR BKR1 BLK operand is set) the reclose signal can be transferred direct to the Breaker 2 if **AR TRANSFER 1 TO 2** is set to "Yes." If set to "No", the scheme is sent to Lockout by the incomplete sequence timer.

- When the reclosing sequence 2-1 is selected and Breaker 2 is blocked (AR BKR2 BLK operand is set) the reclose signal can be transferred direct to the Breaker 1 if **AR TRANSFER 2 TO 1** is set to "Yes." If set to "No" the scheme is sent to Lockout by the incomplete sequence timer.

Force three-pole tripping

The reclosing scheme contains logic that is used to signal trip logic that three-pole tripping is required for certain conditions. This signal is activated by any of the following:

- Autoreclose scheme is paused after it was initiated
- Autoreclose scheme is in the lockout state
- Autoreclose mode is programmed for three-pole operation
- The shot counter is not at 0; that is, the scheme is not in the reset state. This ensures a second trip is three-pole when reclosing onto a permanent single phase fault.
- 1.25 cycles after the single-pole reclose is initiated by the operand assigned to the **AR 1P INIT** setting

Zone 1 extent

The zone 1 extension philosophy here is to apply an overreaching zone permanently as long as the relay is ready to reclose, and reduce the reach when reclosing. Another zone 1 extension approach is to operate normally from an underreaching zone, and use an overreaching distance zone when reclosing the line with the other line end open. This philosophy can be programmed via the line pickup scheme.

The "Extended Zone 1" is 0 when autoreclose is in lockout or disabled and 1 when autoreclose is in reset.

- When "Extended Zone 1" is 0, the distance functions are set to normal underreach Zone 1 setting
- When "Extended Zone 1" is 1, the distance functions can be set to Extended Zone 1 Reach, which is an overreaching setting
- During a reclose cycle, "Extended Zone 1" goes to 0 as soon as the first CLOSE BREAKER signal is issued (AR SHOT COUNT > 0) and remains 0 until the recloser goes back to reset

Settings

The single-phase autoreclose settings are as follows.

AR MODE — This setting selects the Autoreclose operating mode from the four available reclose modes (Mode 1: 1 & 3 Pole, Mode 2: 1 Pole, Mode 3: 3 Pole-A and Mode 4: 3 Pole-B), which functions in conjunction with signals received at the initiation inputs as described. The autorecloser runs in this mode until a different mode is activated through the AR Mode Activation inputs explained as follows.

Mode 1 to **Mode 4 Activation** — This setting selects an operand for activating the corresponding AR mode in runtime. Mode change via activation input takes place when only one of the four activation inputs is high and the AR RIP operand is low (that is, reclose is not in progress) and also the mode to be activated is different from the existing mode, otherwise the activation input is ignored and the existing mode continues to be used. See details in the Mode Control Logic diagram.

AR MAX NUMBER OF SHOTS — This setting specifies the number of reclosures that can be attempted before reclosure goes to lockout when the fault is permanent.

AR INITIATE MODE — This setting selects the autoreclose initiation mode. When selected as "Protection AND CB," the autoreclose element is initiated by protection operation and begins incrementing the autoreclose dead time timer when a circuit breaker is open. Breaker status is determined from breaker auxiliary contacts which need to be correctly configured in breaker settings. In "Protection only" initiation mode, the autoreclose element is initiated by protection operation and begins incrementing the dead time when protection resets, without the need of breaker auxiliary contacts.

AR BLOCK BKR1 — This input selects an operand that blocks the reclose command for breaker 1. This condition can be for example: breaker low air pressure, reclose in progress on another line (for the central breaker in a breaker and a half arrangement), or a sum of conditions combined in FlexLogic.

AR CLOSE TIME BKR1 — This setting represents the closing time for the breaker 1 from the moment the "Close" command is sent to the moment the breaker contacts are closed in the "Protection AND CB" mode or when Open Pole is reset in the "Protection only" mode. In the "Protection Only" mode, **AR1 CLOSE BRK 1** is reset if either protection operates again in the case of the unsuccessful reclose attempt or 20 ms after Open Pole is reset in case of the successful reclosure attempt.

AR BKR MAN CLOSE — This setting selects a FlexLogic operand that represents manual close command to a breaker associated with the autoreclose scheme.

AR BLK TIME UPON MAN CLS — The autoreclose scheme can be disabled for a programmable time delay after an associated circuit breaker is manually commanded to close, preventing reclosing onto an existing fault such as grounds on the line. This delay must be longer than the slowest expected trip from any protection not blocked after manual closing. If the autoreclose scheme is not initiated after a manual close and this time expires the autoreclose scheme is set to the reset state.

AR 1P INIT — This setting selects a FlexLogic operand that is intended to initiate single-pole autoreclosure.

AR 3P INIT — This setting selects a FlexLogic operand that is intended to initiate three-pole autoreclosure, first timer (**AR 3P DEAD TIME 1**) that can be used for a high-speed autoreclosure.

AR 3P TD INIT — This setting selects a FlexLogic operand intended to initiate three-pole autoreclosure. second timer (**AR 3P DEAD TIME 2**) can be used for a time-delay autoreclosure. If the operand assigned to this setting and the **AR 3P INIT** setting are asserted simultaneously, then autoreclose does not activate the first and second shot timers at the same time. Instead, the priority is given to the **AR 3P INIT** operand.

AR MULTI-P FAULT — This setting selects a FlexLogic operand that indicates a multi-phase fault. Set the operand value to zero for single-phase to ground faults.

BKR ONE POLE OPEN — This setting selects a FlexLogic operand that indicates that the breaker has opened correctly following a single phase to ground fault and the autoreclose scheme can start timing the single pole dead time (for 1-2 reclose sequence for example, breaker 1 trips single pole and breaker 2 trips 3 pole).

The scheme has a pre-wired input that indicates breaker status.

BKR 3 POLE OPEN — This setting selects a FlexLogic operand that indicates that the breaker has opened three pole and the autoreclose scheme can start timing the three pole dead time. The scheme has a pre-wired input that indicates breaker status.

AR 3-P DEAD TIME 1 — This is the dead time following the first three pole trip. This intentional delay can be used for a high-speed three-pole autoreclose. Set it longer than the estimated de-ionizing time following the three-pole trip.

AR 3-P DEAD TIME 2 — This is the dead time following the second three-pole trip or initiated by the **AR 3P TD INIT** input. This intentional delay is typically used for a time delayed three-pole autoreclose (as opposed to high speed three-pole autoreclose).

AR 3-P DEAD TIME 3 — This setting represents the dead time following the third three-pole trip.

AR 3-P DEAD TIME 4 — This setting represents the dead time following the fourth three-pole trip.

AR EXTEND DEAD T 1 — This setting selects an operand that adapts the duration of the dead time for the first shot to the possibility of non-simultaneous tripping at the two line ends. Typically this is the operand set when the communication channel is out of service.

AR DEAD TIME 1 EXTENSION — This timer sets the length of the dead time 1 extension for possible non-simultaneous tripping of the two ends of the line.

AR RESET — This setting selects the operand that forces the autoreclose scheme from any state to reset. Typically this is a manual reset from lockout, local, or remote.

AR RESET TIME — A reset timer output resets the recloser following a successful reclosure sequence. The setting is based on the breaker time that is the minimum time required between successive reclose sequences.

AR BKR CLOSED — This setting selects an operand that indicates that the breakers are closed at the end of the reset time and the scheme can reset.

AR BLOCK — This setting selects the operand that blocks the autoreclose scheme (it can be a sum of conditions, such as time delayed tripping, breaker failure, and bus differential protection. If the block signal is present before autoreclose scheme initiation, the AR DISABLED FlexLogic operand is set. If the block signal occurs when the scheme is in the RIP state, the scheme is sent to lockout.

AR PAUSE — The pause input offers the ability to freeze the autoreclose cycle until the pause signal disappears. This can be done when a trip occurs and simultaneously or previously, some conditions are detected, such as out-of step or loss of guard frequency, or a remote transfer trip signal is received. The pause signal freezes all four dead timers. When the pause

signal disappears, the autoreclose cycle is resumed by continuing the shot timer it left off when paused. This feature can also be used when a transformer is tapped from the protected line and a reclose is not desirable until it is disconnected from the line. In this situation, the reclose scheme pauses until the transformer is disconnected.

AR INCOMPLETE SEQ TIME — This timer is used to set the maximum time interval allowed for a single reclose shot. It is started whenever a reclosure is initiated and is active until the CLOSE BKR1 or CLOSE BKR2 signal is sent. If all conditions allowing a breaker closure are not satisfied when this time expires, the scheme goes to “Lockout”. The minimum permissible setting is established by the **AR 3-P DEAD TIME 2** timer setting. Settings beyond this determine the wait time for the breaker to open so that the reclose cycle can continue and/or for the AR PAUSE signal to reset and allow the reclose cycle to continue and/or for the AR BKR1 BLK signal to disappear and allow the AR CLOSE BKR1 signal to be sent.

AR BLOCK BKR2 — This input selects an operand that blocks the reclose command for breaker 2. This condition can be for example: breaker low air pressure, reclose in progress on another line (for the central breaker in a breaker and a half arrangement), or a sum of conditions combined in FlexLogic.

AR CLOSE TIME BKR2 — This setting represents the closing time for the breaker 2 from the moment the 'Close' command is sent to the moment the breaker contacts are closed in the "Protection AND CB" mode or when Open Pole is reset in the "Protection only" mode. In the "Protection Only" mode, **AR1 CLOSE BRK 1** is reset if either protection operates again in the case of the unsuccessful reclose attempt or 20 ms after Open Pole is reset in case of a successful reclosure attempt.

AR TRANSFER 1 TO 2 — This setting establishes how the scheme performs when the breaker closing sequence is 1-2 and breaker 1 is blocked. When set to “Yes” the closing command is transferred direct to breaker 2 without waiting the transfer time. When set to “No” the closing command is blocked by the AR BKR1 BLK signal and the scheme will be sent to lockout by the incomplete sequence timer.

AR TRANSFER 2 TO 1 — This setting establishes how the scheme performs when the breaker closing sequence is 2-1 and breaker 2 is blocked. When set to “Yes” the closing command is transferred direct to breaker 1 without waiting the transfer time. When set to “No”, the closing command is blocked by the AR BKR2 BLK signal and the scheme is sent to lockout by the incomplete sequence timer.

AR BKR1 FAIL OPTION — This setting establishes how the scheme performs when the breaker closing sequence is 1-2 and Breaker 1 has failed to close. When set to “Continue” the closing command is transferred to breaker 2, which continues the reclosing cycle until successful (the scheme resets) or unsuccessful (the scheme goes to Lockout). When set to “Lockout” the scheme goes to lockout without attempting to reclose breaker 2.

AR BKR2 FAIL OPTION — This setting establishes how the scheme performs when the breaker closing sequence is 2-1 and Breaker 2 has failed to close. When set to “Continue” the closing command is transferred to breaker 1, which continues the reclosing cycle until successful (the scheme resets) or unsuccessful (the scheme goes to Lockout). When set to “Lockout” the scheme goes to lockout without attempting to reclose breaker 1.

AR 1-P DEAD TIME — Set this intentional delay longer than the estimated de-ionizing time after the first single-pole trip.

AR BREAKER SEQUENCE — This setting selects the breakers reclose sequence: Select “1” for reclose breaker 1 only, “2” for reclose breaker 2 only, “1&2” for reclose both breakers simultaneously, “1-2” for reclose breakers sequentially; Breaker 1 first, and “2-1” for reclose breakers sequentially; Breaker 2 first.

AR TRANSFER TIME — The transfer time is used only for breaker closing sequence 1-2 or 2-1, when the two breakers are reclosed sequentially. The transfer timer is initiated by a close signal to the first breaker. The transfer timer transfers the reclose signal from the breaker selected to close first to the second breaker. The time delay setting is based on the maximum time interval between the autoreclose signal and the protection trip contact closure assuming a permanent fault (unsuccessful reclose). Therefore, the minimum setting is equal to the maximum breaker closing time plus the maximum line protection operating time plus a suitable margin. This setting prevents the autoreclose scheme from transferring the close signal to the second breaker unless a successful reclose of the first breaker occurs.

AR BUS FLT INIT — This setting is used in breaker-and-a-half applications to allow the autoreclose control function to perform reclosing with only one breaker previously opened by bus protection. For line faults, both breakers must open for the autoreclose reclosing cycles to take effect.

Figure 5-226: Single-pole autoreclose logic (Sheet 1 of 3)

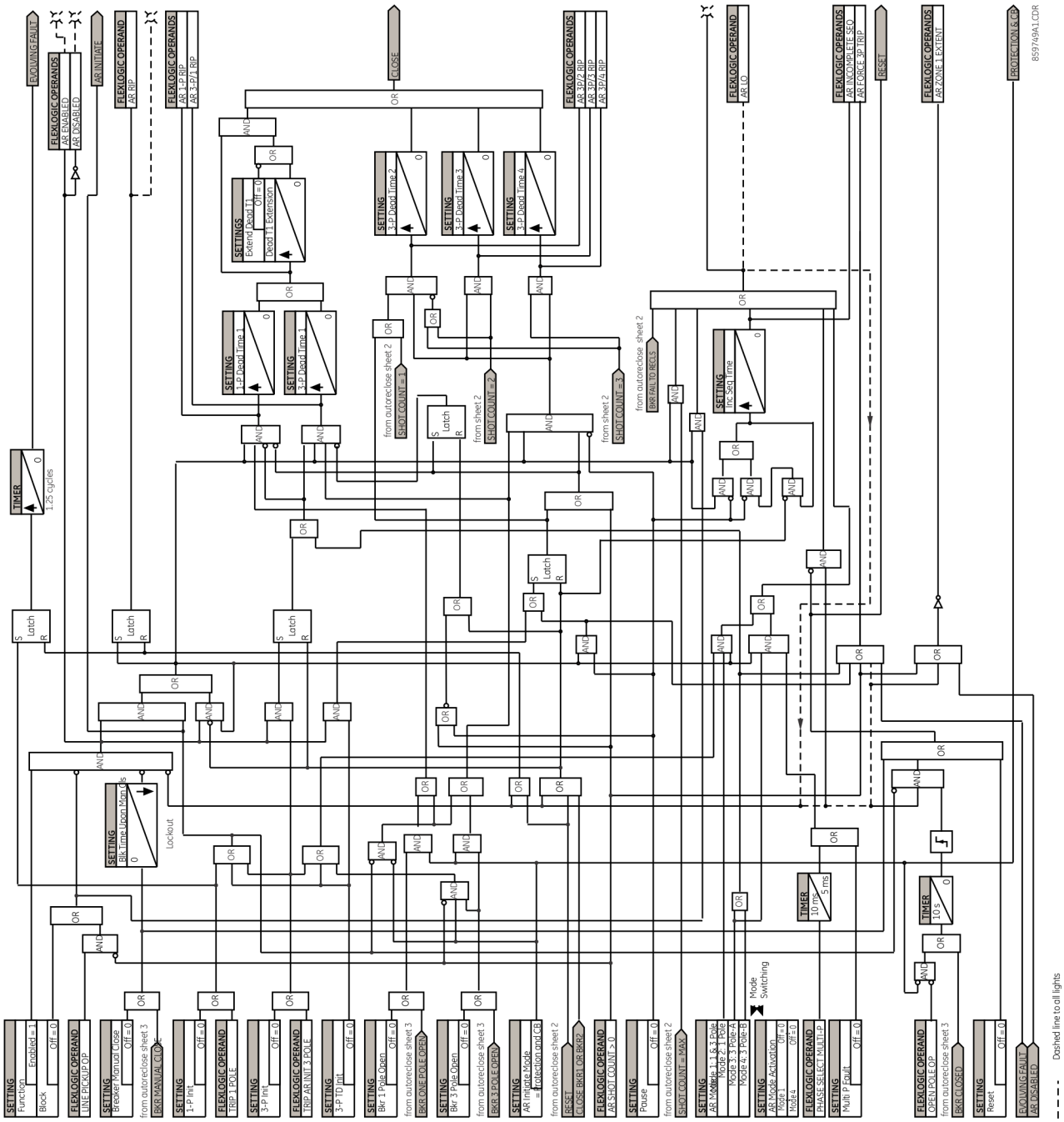

In runtime, AR mode can be changed through the mode control logic as shown in the following diagram. Initially, the autorecloser runs in the mode as per **AR MODE** setting. Then the relay checks the AR activation inputs in each protection pass. The AR mode is switched to the new mode when

- Only one of four activation inputs is high, and
- AP RIP operand is low, and
- The mode to be activated is different from the current AR mode

The logic allows activation of one mode at a time. Simultaneous multiple activations are ignored and mode switching does not happen. However, a FlexLogic operand, AR MODE SWITCH FAIL, is asserted if either simultaneous multiple activations are initiated, or a single activation is initiated but recloser is already in progress.

The active AR mode is memorized (latched) on power cycling. This means that the relay uses the last-used mode on power-up. The AR mode resets to the default mode (specified by the **AR MODE** setting) when any settings in the autoreclose function are changed.

Figure 5-227: Mode control logic

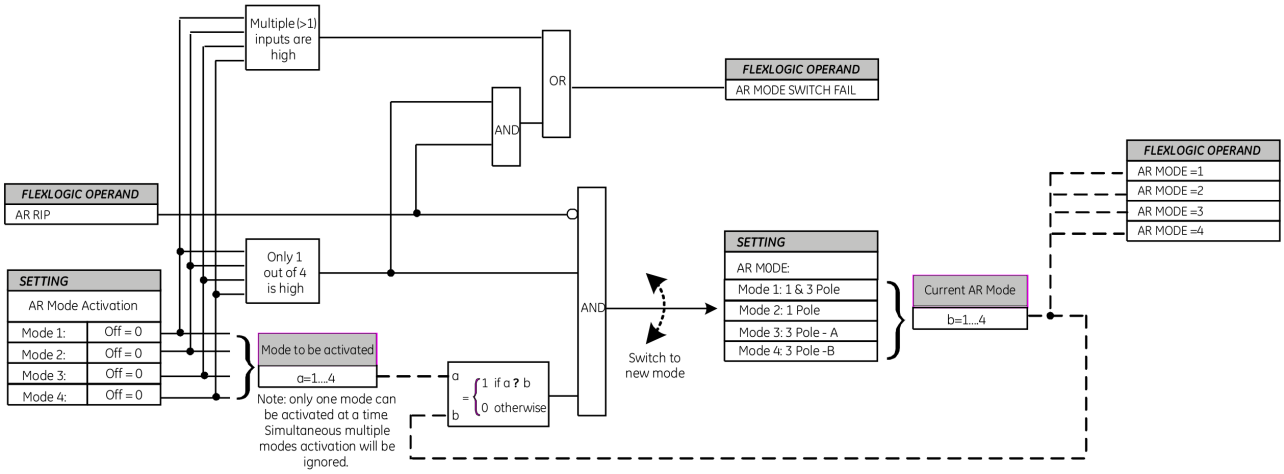

In addition, the current AR mode is available as FlexLogic Operands because AR Mode equals to 1, 2, 3, and 4 respectively so that it can be monitored and logged.

5

Figure 5-228: Single-pole autoreclose logic (Sheet 2 of 3)

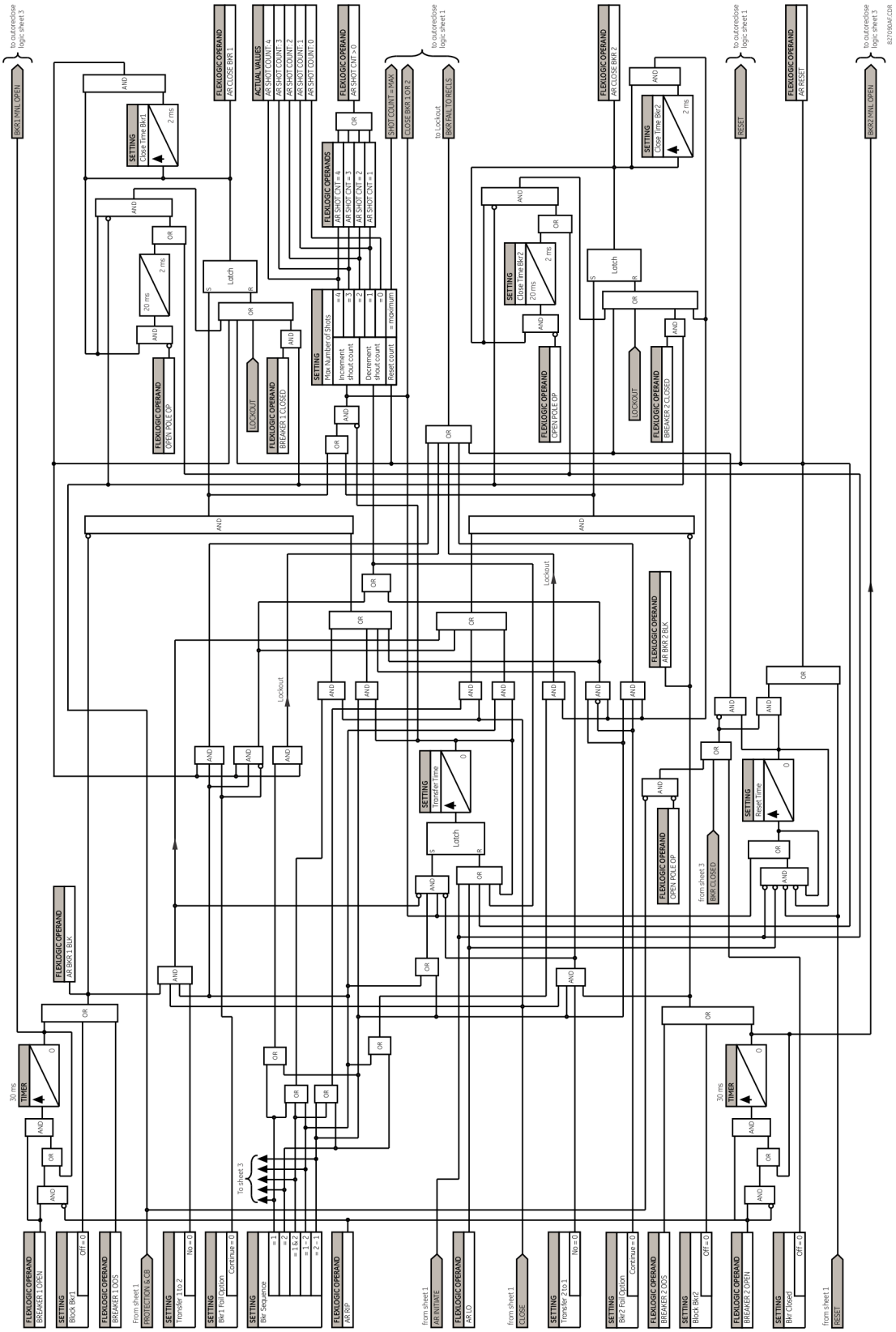

Figure 5-229: Single-pole autoreclose logic (Sheet 3 of 3)

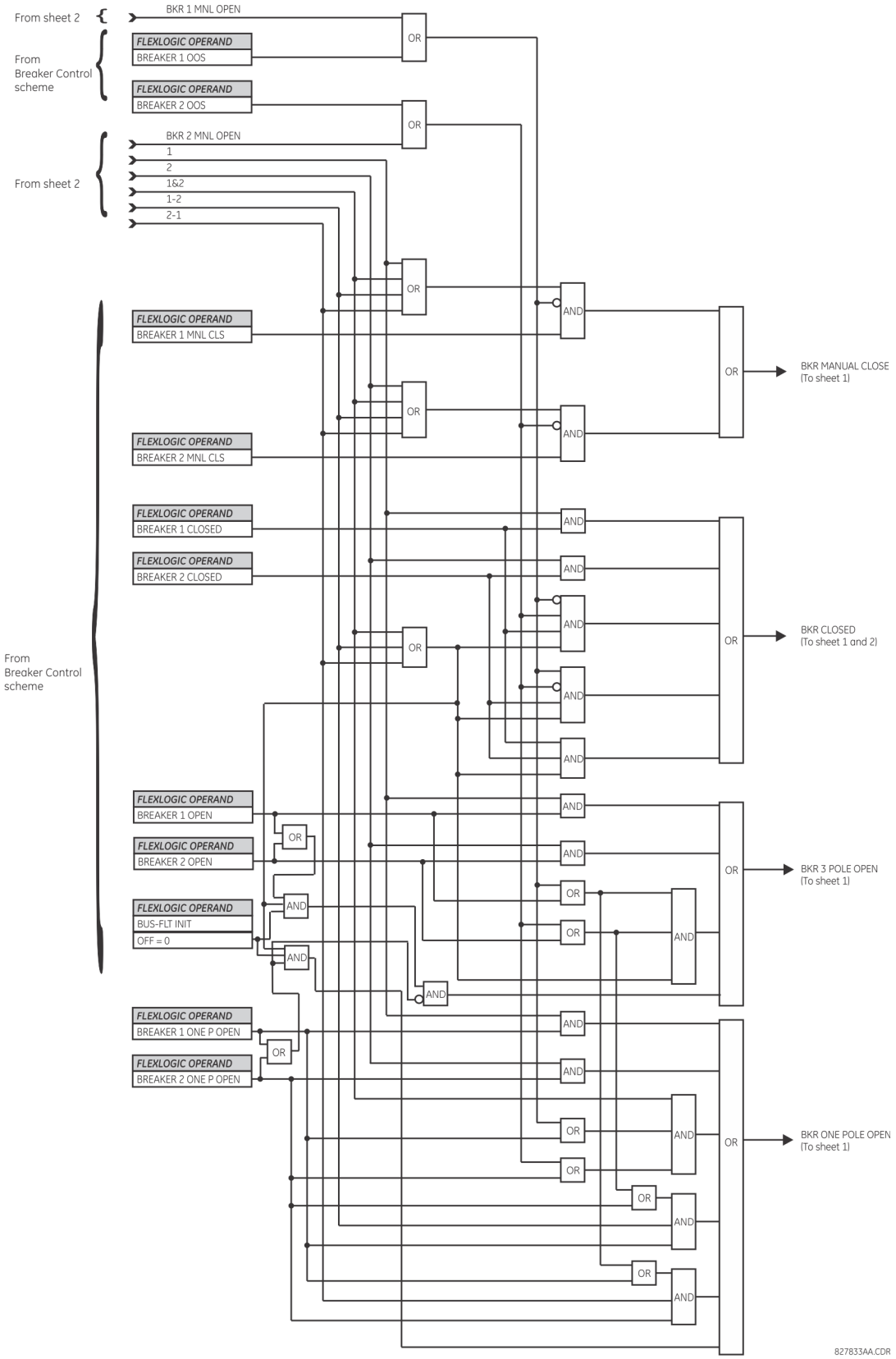

Figure 5-230: Example of reclosing sequence

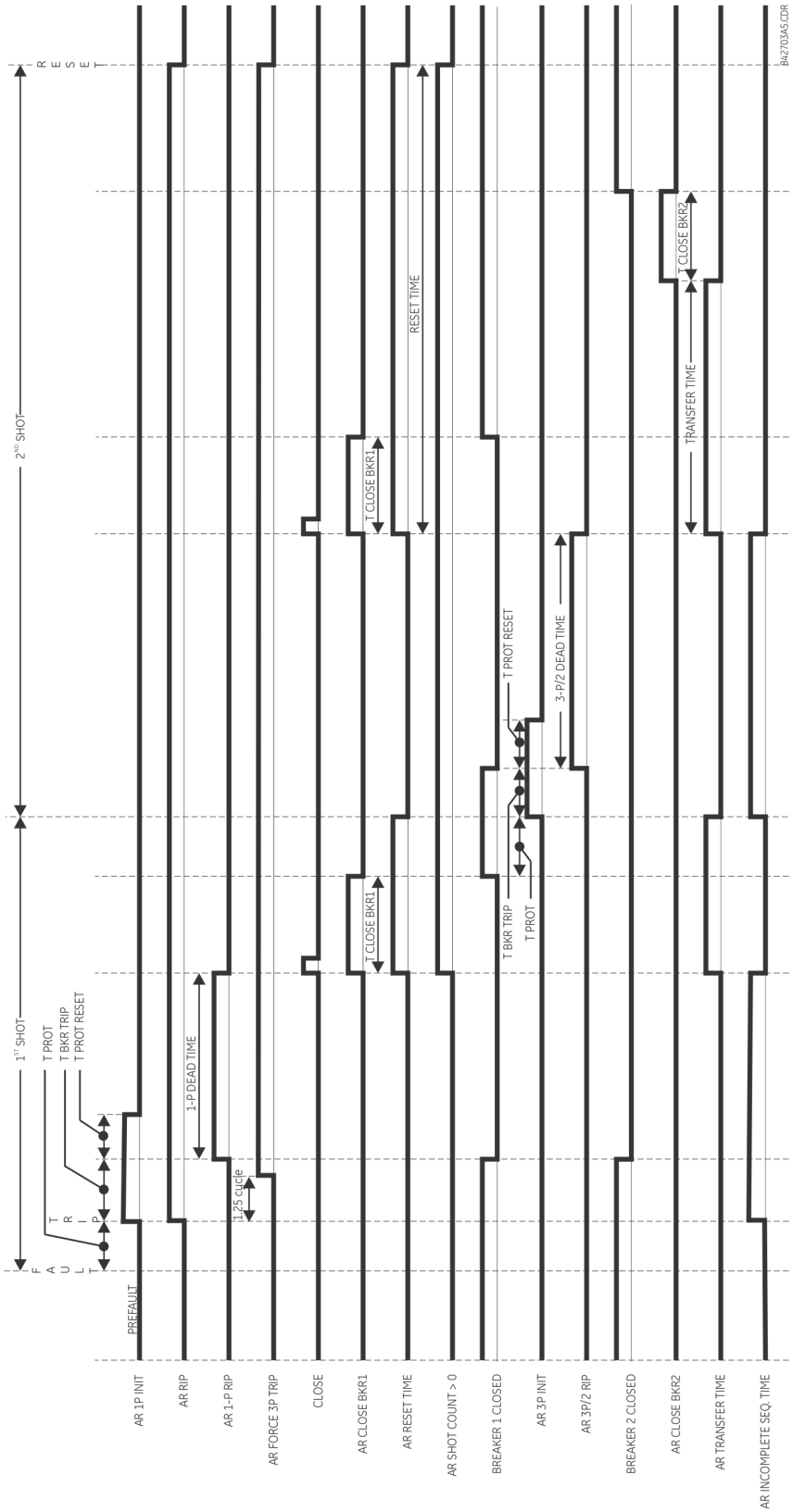

5.8.14 Frequency rate of change (ANSI 81R)

SETTINGS ⇨⇩ CONTROL ELEMENTS ⇨⇩ FREQUENCY RATE OF CHANGE ⇨ FREQUENCY RATE OF CHANGE 1(4)

■ FREQUENCY RATE ■ OF CHANGE 1	⇔	**FREQ RATE 1 FUNCTION: Disabled**	Range: Disabled, Enabled
	⇩	**FREQ RATE 1 SOURCE: SRC 1**	Range: SRC 1, SRC 2, SRC 3, SRC 4
	⇩	**FREQ RATE 1 TREND: Increasing**	Range: Increasing, Decreasing, Bi-directional
	⇩	**FREQ RATE 1 PICKUP: 0.50 Hz/sec**	Range: 0.10 to 15.00 Hz/sec in steps of 0.01
	⇩	**FREQ RATE 1 OV SUPV PICKUP: 0.700 pu**	Range: 0.100 to 3.000 pu in steps of 0.001
	⇩	**FREQ RATE 1 OC SUPV PICKUP: 0.200 pu**	Range: 0.020 to 30.000 pu in steps of 0.001
	⇩	**FREQ RATE 1 MIN FREQUENCY: 45.00 Hz**	Range: 20.00 to 80.00 Hz in steps of 0.01
	⇩	**FREQ RATE 1 MAX FREQUENCY: 65.00 Hz**	Range: 20.00 to 80.00 Hz in steps of 0.01
	⇩	**FREQ RATE 1 PICKUP DELAY: 0.000 s**	Range: 0 to 65.535 s in steps of 0.001
	⇩	**FREQ RATE 1 RESET DELAY: 0.000 s**	Range: 0 to 65.535 s in steps of 0.001
	⇩	**FREQ RATE 1 BLOCK: Off**	Range: FlexLogic operand
	⇩	**FREQ RATE 1 TARGET: Self-reset**	Range: Self-reset, Latched, Disabled
	⇧	**FREQ RATE 1 EVENTS: Disabled**	Range: Disabled, Enabled

The element responds to rate of change of frequency with voltage, current and frequency supervision.

FREQ RATE 1 TREND — This setting configures the element to respond to increasing or decreasing frequency, or to frequency change in either direction.

FREQ RATE 1 PICKUP — This setting specifies an intended df/dt pickup threshold. For applications monitoring a decreasing trend, set **FREQ RATE 1 TREND** to "Decreasing" and specify the pickup threshold accordingly. The operating condition is: -df/dt > Pickup.

For applications monitoring an increasing trend, set **FREQ RATE 1 TREND** to "Increasing" and specify the pickup threshold accordingly. The operating condition is: df/dt > Pickup.

For applications monitoring rate of change of frequency in any direction set **FREQ RATE 1 TREND** to "Bi-Directional" and specify the pickup threshold accordingly. The operating condition is: abs (df/dt) > Pickup.

FREQ RATE 1 OV SUPV PICKUP — This setting defines the minimum voltage level required for operation of the element. The supervising function responds to the positive-sequence voltage. Use overvoltage supervision to prevent operation under specific system conditions, such as faults.

FREQ RATE 1 OC SUPV PICKUP — This setting defines minimum current level required for operation of the element. The supervising function responds to the positive-sequence current. Typical application includes load shedding. Set the pickup threshold to 0.020 if no overcurrent supervision is required.

FREQ RATE 1 MIN FREQUENCY — This setting defines the minimum frequency level required for operation of the element. The setting can be used to effectively block the feature based on frequency. For example, if the intent is to monitor an increasing trend but only if the frequency is already above certain level, set this setting to the required frequency level.

FREQ RATE 1 MAX FREQUENCY — This setting defines the maximum frequency level required for operation of the element. The setting can be used to effectively block the feature based on frequency. For example, if the intent is to monitor a decreasing trend but only if the frequency is already below a certain level (such as for load shedding), set this setting to the required frequency level.

NOTE

If the signal source assigned to the frequency rate of change element is only set to auxiliary VT, then the minimum voltage supervision is 3 V.

Figure 5-231: Frequency rate of change logic

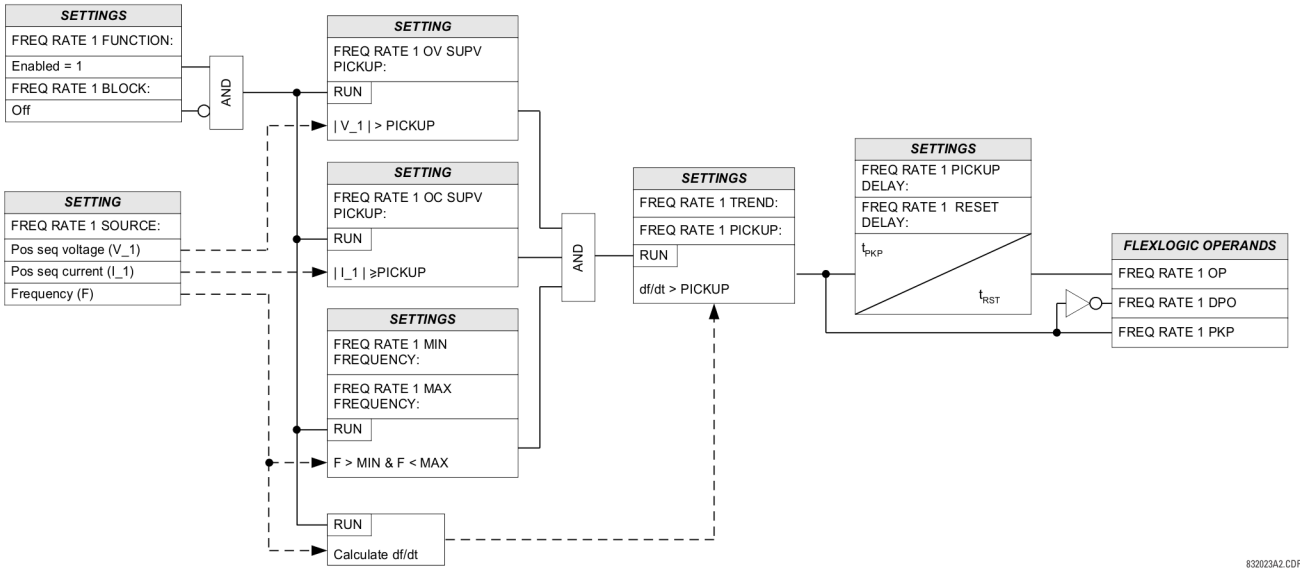

5.9 Inputs/outputs

5.9.1 Contact inputs

SETTINGS ⇨⇩ INPUTS/OUTPUTS ⇨ CONTACT INPUTS

■ CONTACT INPUTS
■

⇔ **■ CONTACT INPUT H5a**
■

⇔ **CONTACT INPUT H5a ID: Cont Ip 1** — Range: up to 20 alphanumeric characters

⇩ **CONTACT INPUT H5a DEBNCE TIME: 6.0 ms** — Range: 0.0 to 16.0 ms in steps of 0.5

⇧ **CONTACT INPUT H5a EVENTS: Disabled** — Range: Disabled, Enabled

↓

⇩ **■ CONTACT INPUT xxx**
■

⇧ **■ CONTACT INPUT**
■ THRESHOLDS

⇔	**Ips H5a,H5c,H6a,H6c** **THRESHOLD: 33 Vdc**	Range: 17, 33, 84, 166 Vdc
⇕	**Ips H7a,H7c,H8a,H8c** **THRESHOLD: 33 Vdc**	Range: 17, 33, 84, 166 Vdc
	↓	
⇧	**Ips xxx,xxx,xxx,xxx** **THRESHOLD: 33 Vdc**	Range: 17, 33, 84, 166 Vdc

Contact inputs and outputs are digital signals associated with connections to hard-wired contacts. Wet and dry contacts are supported.

The contact inputs menu contains configuration settings for each contact input as well as voltage thresholds for each group of four contact inputs. Upon startup, the relay processor determines (from an assessment of the installed modules) which contact inputs are available and then display settings for only those inputs.

An alphanumeric ID can be assigned to a contact input for diagnostic, setting, and event recording purposes. The CONTACT IP X On (Logic 1) FlexLogic operand corresponds to contact input "X" being closed, while CONTACT IP X Off corresponds to contact input "X" being open. The **CONTACT INPUT DEBNCE TIME** defines the time required for the contact to overcome 'contact bouncing' conditions. As this time differs for different contact types and manufacturers, set it as a maximum contact debounce time (per manufacturer specifications) plus some margin to ensure proper operation. If **CONTACT INPUT EVENTS** is set to "Enabled," every change in the contact input state triggers an event.

A raw status is scanned for all Contact Inputs synchronously at the constant rate of 0.5 ms as shown in the following figure. The DC input voltage is compared to a user-settable threshold. A new contact input state must be maintained for a user-settable debounce time in order for the L90 to validate the new contact state. In the following figure, the debounce time is set at 2.5 ms; thus the 6th sample in a row validates the change of state (mark no. 1 in the diagram). Once validated (de-bounced), the contact input asserts a corresponding FlexLogic operand and logs an event as per user setting.

A time stamp of the first sample in the sequence that validates the new state is used when logging the change of the contact input into the Event Recorder (mark no. 2 in the figure).

Protection and control elements, as well as FlexLogic equations and timers, are executed eight times in a power system cycle. The protection pass duration is controlled by the frequency tracking mechanism. The FlexLogic operand reflecting the debounced state of the contact is updated at the protection pass following the validation (marks no. 3 and 4 on the figure that follows). The update is performed at the beginning of the protection pass so all protection and control functions, as well as FlexLogic equations, are fed with the updated states of the contact inputs.

The FlexLogic operand response time to the contact input change is equal to the debounce time setting plus up to one protection pass (variable and depending on system frequency if frequency tracking enabled). If the change of state occurs just after a protection pass, the recognition is delayed until the subsequent protection pass; that is, by the entire duration of the protection pass. If the change occurs just prior to a protection pass, the state is recognized immediately. Statistically a delay of half the protection pass is expected. Owing to the 0.5 ms scan rate, the time resolution for the input contact is below 1 ms.

For example, eight protection passes per cycle on a 60 Hz system correspond to a protection pass every 2.1 ms. With a contact debounce time setting of 3.0 ms, the FlexLogic operand-assert time limits are: 3.0 + 0.0 = 3.0 ms and 3.0 + 2.1 = 5.1 ms. These time limits depend on how soon the protection pass runs after the debouncing time.

Regardless of the contact debounce time setting, the contact input event is time-stamped with a 1 μs accuracy using the time of the first scan corresponding to the new state (mark no. 2 shown). Therefore, the time stamp reflects a change in the DC voltage across the contact input terminals that was not accidental as it was subsequently validated using the debounce timer. Keep in mind that the associated FlexLogic operand is asserted/de-asserted later, after validating the change.

The debounce algorithm is symmetrical: the same procedure and debounce time are used to filter the LOW-HIGH (marks no.1, 2, 3, and 4 in the figure) and HIGH-LOW (marks no. 5, 6, 7, and 8) transitions.

Figure 5-232: Input contact debouncing mechanism and time stamp sample timing

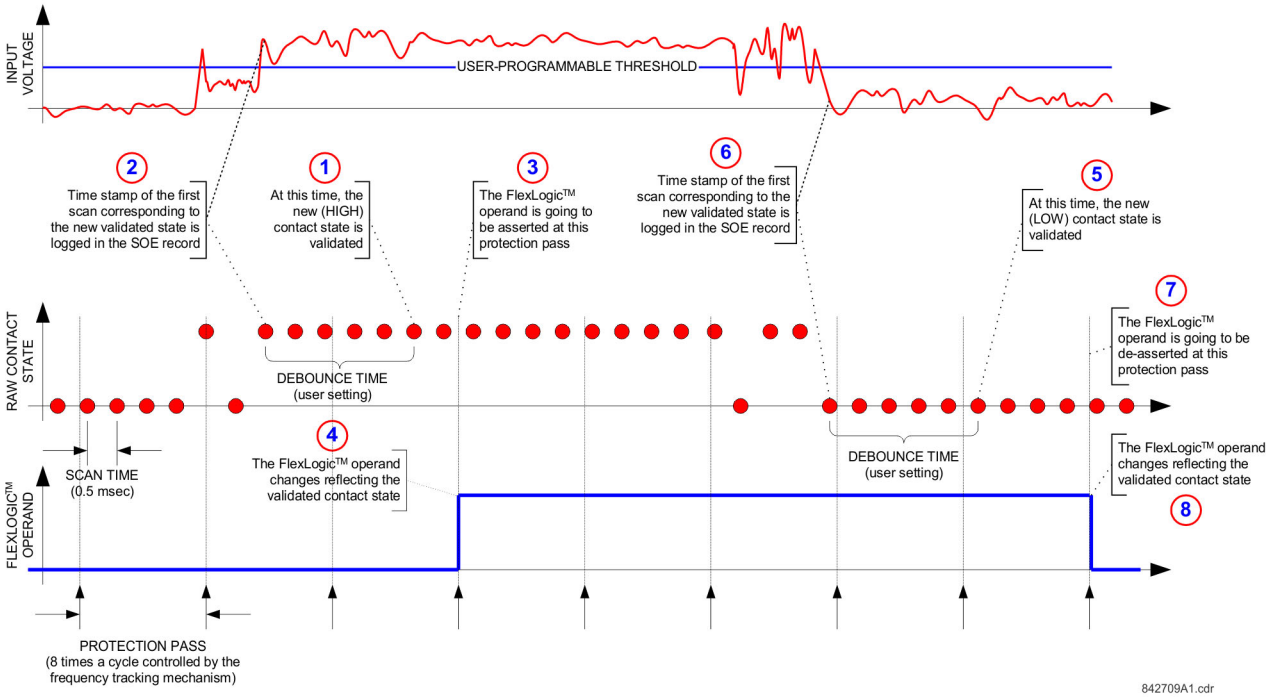

5

Contact inputs are isolated in groups of four to allow connection of wet contacts from different voltage sources for each group. The **CONTACT INPUT THRESHOLDS** determine the minimum voltage required to detect a closed contact input. This value is selected according to the following criteria: 17 for 24 V sources, 33 for 48 V sources, 84 for 110 to 125 V sources and 166 for 250 V sources.

For example, to use contact input H5a as a status input from the breaker 52b contact to seal-in the trip relay and record it in the Event Records menu, make the following settings changes:

CONTACT INPUT H5a ID: "Breaker Closed (52b)"
CONTACT INPUT H5a EVENTS: "Enabled"

Note that the 52b contact is closed when the breaker is open and open when the breaker is closed.

5.9.2 Virtual inputs

SETTINGS ⇨⇩ INPUTS/OUTPUTS ⇨⇩ VIRTUAL INPUTS ⇨ VIRTUAL INPUT 1(64)

■ **VIRTUAL INPUT 1** ■	⇔	**VIRTUAL INPUT 1** **FUNCTION: Disabled**	Range: Disabled, Enabled
	⇩	**VIRTUAL INPUT 1 ID:** **Virt Ip 1**	Range: up to 20 alphanumeric characters
	⇩	**VIRTUAL INPUT 1** **TYPE: Latched**	Range: Self-Reset, Latched
	⇩	**VIRTUAL INPUT 1** **EVENTS: Disabled**	Range: Disabled, Enabled

The virtual inputs and outputs are digital signals associated with UR-series internal logic signals. Virtual inputs include signals generated by the local user interface. The virtual outputs are outputs of FlexLogic equations used to customize the device. Virtual outputs can also serve as virtual inputs to FlexLogic equations.

There are 64 virtual inputs that can be individually programmed to respond to input signals from the keypad (via the **COMMANDS** menu) and communications protocols. All virtual input operands are defaulted to "Off" (logic 0) unless the appropriate input signal is received.

If the **VIRTUAL INPUT x FUNCTION** is to "Disabled," the input is forced to off (logic 0) regardless of any attempt to alter the input. If set to "Enabled," the input operates as shown on the logic diagram and generates output FlexLogic operands in response to received input signals and the applied settings.

There are two types of operation: self-reset and latched. If **VIRTUAL INPUT x type** is "Self-Reset," when the input signal transits from off to on, the output operand is set to on for only one evaluation of the FlexLogic equations and then return to off. If set to "Latched," the virtual input sets the state of the output operand to the same state as the most recent received input.

The self-reset operating mode generates the output operand for a single evaluation of the FlexLogic equations. If the operand is to be used anywhere other than internally in a FlexLogic equation, it likely needs to be lengthened in time. A FlexLogic timer with a delayed reset can perform this function.

Figure 5-233: Virtual inputs logic

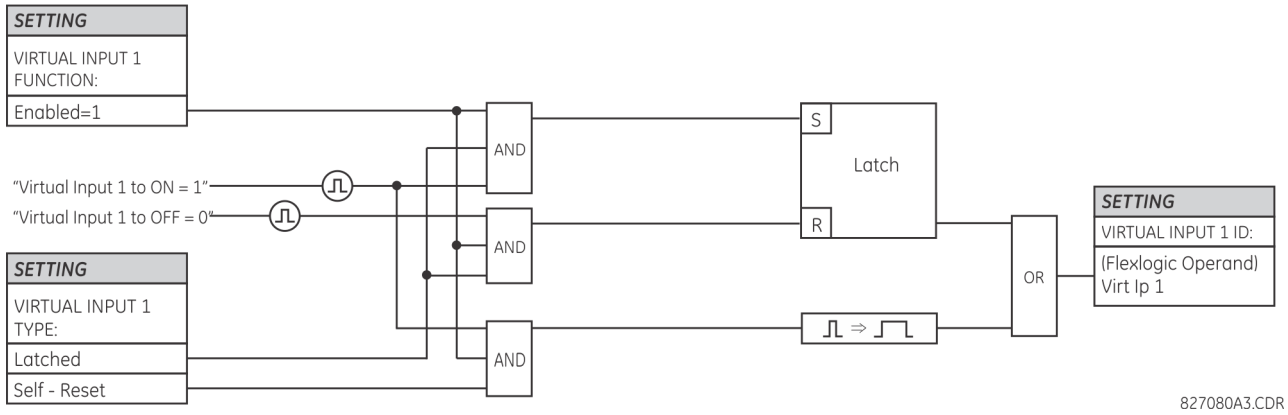

5.9.3 Contact outputs

5.9.3.1 Digital outputs

SETTINGS ⇨⇩ INPUTS/OUTPUTS ⇨⇩ CONTACT OUTPUTS ⇨⇩ CONTACT OUTPUT H1(H72)

■ **CONTACT OUTPUT H1** ■	⇔	**CONTACT OUTPUT H1 ID** **Cont Op 1**	Range: up to 20 alphanumeric characters
	⇩	**OUTPUT H1 OPERATE:** **Off**	Range: FlexLogic operand
	⇩	**OUTPUT H1 SEAL-IN:** **Off**	Range: FlexLogic operand
	⇧	**CONTACT OUTPUT H1** **EVENTS: Enabled**	Range: Disabled, Enabled

A contact inputs and outputs are digital signals associated with connections to hard-wired contacts. Wet and dry contacts are supported.

Upon startup of the relay, the main processor determines from an assessment of the modules installed in the chassis which contact outputs are available and then presents the settings for only these outputs. Where the contact input is non-latching, the settings are as shown.

An ID can be assigned to each contact output. The signal that can OPERATE a contact output can be any FlexLogic operand (virtual output, element state, contact input, or virtual input). An additional FlexLogic operand can be used to SEAL-IN the relay. Any change of state of a contact output can be logged as an Event if programmed to do so.

For example, the trip circuit current is monitored by providing a current threshold detector in series with some Form-A contacts (see the trip circuit example in the Digital Elements section). The monitor sets a flag (see the specifications for Form-A). The name of the FlexLogic operand set by the monitor, consists of the output relay designation, followed by the name of the flag; for example, Cont OP 1 IOn.

In most breaker control circuits, the trip coil is connected in series with a breaker auxiliary contact used to interrupt current flow after the breaker has tripped, to prevent damage to the less robust initiating contact. This can be done by monitoring an auxiliary contact on the breaker which opens when the breaker has tripped, but this scheme is subject to incorrect operation caused by differences in timing between breaker auxiliary contact change-of-state and interruption of current in the trip circuit. The most dependable protection of the initiating contact is provided by directly measuring current in the tripping circuit, and using this parameter to control resetting of the initiating relay. This scheme is often called trip seal-in.

This can be realized using the Cont OP 1 IOn FlexLogic operand to seal-in the contact output as follows:

CONTACT OUTPUT H1 ID: "Cont Op 1"
OUTPUT H1 OPERATE: any suitable FlexLogic operand
OUTPUT H1 SEAL-IN: "Cont Op 1 IOn"
CONTACT OUTPUT H1 EVENTS: "Enabled"

Figure 5-234: Contact input/output module type 6A contact 1 logic

5.9.3.2 Latching outputs

SETTINGS ⇨⇩ INPUTS/OUTPUTS ⇨⇩ CONTACT OUTPUTS ⇨ CONTACT OUTPUT H1a

■ **CONTACT OUTPUT H1a** ■	⇔	**OUTPUT H1a ID L-Cont Op 1**	Range: up to 20 alphanumeric characters
	⇩	**OUTPUT H1a OPERATE: Off**	Range: FlexLogic operand
	⇩	**OUTPUT H1a RESET: Off**	Range: FlexLogic operand
	⇩	**OUTPUT H1a TYPE: Operate-dominant**	Range: Operate-dominant, Reset-dominant
	⇩	**OUTPUT H1a EVENTS: Disabled**	Range: Disabled, Enabled

The latching output contacts are mechanically bi-stable and controlled by two separate (open and close) coils. As such they retain their position even if the relay is not powered up. The relay recognizes all latching output contact cards and populates the setting menu accordingly. On power up, the relay reads positions of the latching contacts from the hardware before executing any other functions of the relay (such as protection and control features or FlexLogic).

The latching output modules, either as part of the relay or as individual modules, are shipped from the factory with all latching contacts open. It is highly recommended to double-check the programming and positions of the latching contacts when replacing a module.

Since the relay asserts the output contact and reads back its position, it is possible to incorporate self-monitoring capabilities for the latching outputs. If any latching outputs exhibits a discrepancy, the LATCHING OUTPUT ERROR self-test error is declared. The error is signaled by the LATCHING OUT ERROR FlexLogic operand, event, and target message.

OUTPUT H1a OPERATE — This setting specifies a FlexLogic operand to operate the 'close coil' of the contact. The relay seals-in this input to safely close the contact. Once the contact is closed and the **RESET** input is logic 0 (off), any activity of the **OPERATE** input, such as subsequent chattering, does not have any effect. With both the **OPERATE** and **RESET** inputs active (logic 1), the response of the latching contact is specified by the **OUTPUT H1a TYPE** setting.

OUTPUT H1a RESET — This setting specifies a FlexLogic operand to operate the 'trip coil' of the contact. The relay seals-in this input to safely open the contact. Once the contact is opened and the **OPERATE** input is logic 0 (off), any activity of the **RESET** input, such as subsequent chattering, does not have any effect. With both the **OPERATE** and **RESET** inputs active (logic 1), the response of the latching contact is specified by the **OUTPUT H1a TYPE** setting.

OUTPUT H1a TYPE — This setting specifies the contact response under conflicting control inputs; that is, when both the **OPERATE** and **RESET** signals are applied. With both control inputs applied simultaneously, the contact closes if set to "Operate-dominant" and opens if set to "Reset-dominant."

Figure 5-235: Contact input/output module type 4L contact 1 logic

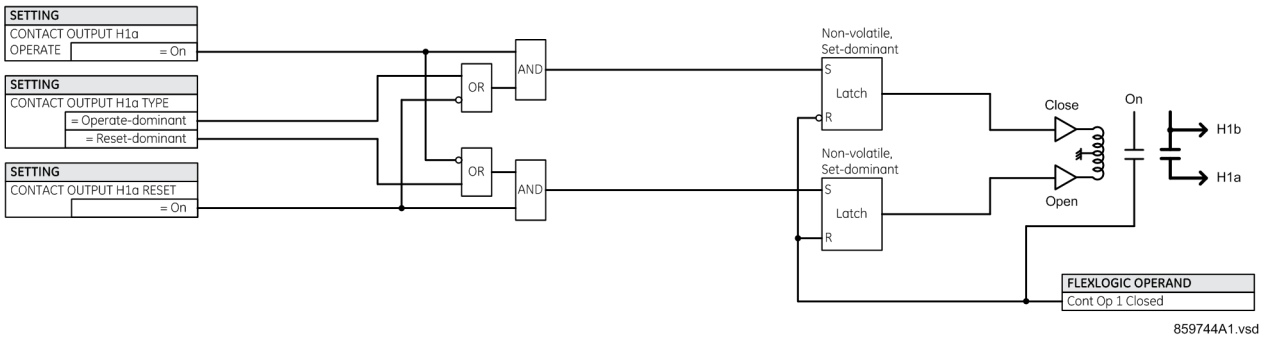

Application example 1

A latching output contact H1a is to be controlled from two user-programmable pushbuttons (buttons number 1 and 2). The following settings are applied.

Program the Latching Outputs by making the following changes in the **SETTINGS ⇨⇩ INPUTS/OUTPUTS ⇨⇩ CONTACT OUTPUTS ⇨ CONTACT OUTPUT H1a** menu (assuming an H4L module):

OUTPUT H1a OPERATE: "PUSHBUTTON 1 ON"
OUTPUT H1a RESET: "PUSHBUTTON 2 ON"

Program the pushbuttons by making the following changes in the **PRODUCT SETUP ⇨⇩ USER-PROGRAMMABLE PUSHBUTTONS ⇨⇩ USER PUSHBUTTON 1** and **USER PUSHBUTTON 2** menus:

PUSHBUTTON 1 FUNCTION: "Self-reset"
PUSHBTN 1 DROP-OUT TIME: "0.00 s"
PUSHBUTTON 2 FUNCTION: "Self-reset"
PUSHBTN 2 DROP-OUT TIME: "0.00 s"

Application example 2

A relay, having two latching contacts H1a and H1c, is to be programmed. The H1a contact is to be a Type-a contact, while the H1c contact is to be a Type-b contact (Type-a means closed after exercising the operate input; Type-b means closed after exercising the reset input). The relay is to be controlled from virtual outputs: VO1 to operate and VO2 to reset.

Program the Latching Outputs by making the following changes in the **SETTINGS ⇨⇩ INPUTS/OUTPUTS ⇨⇩ CONTACT OUTPUTS ⇨ CONTACT OUTPUT H1a** and **CONTACT OUTPUT H1c** menus (assuming an H4L module):

OUTPUT H1a OPERATE: "VO1"
OUTPUT H1a RESET: "VO2"
OUTPUT H1c OPERATE: "VO2"
OUTPUT H1c RESET: "VO1"

Since the two physical contacts in this example are mechanically separated and have individual control inputs, they do not operate at exactly the same time. A discrepancy in the range of a fraction of a maximum operating time can occur. Therefore, a pair of contacts programmed to be a multi-contact relay do not guarantee any specific sequence of operation (such as make before break). If required, the sequence of operation must be programmed explicitly by delaying some of the control inputs as shown in the next application example.

Application example 3

A make before break functionality must be added to the preceding example. An overlap of 20 ms is required to implement this functionality.

Write the following FlexLogic equation (EnerVista example shown).

FlexLogic Equation Editor // D60_490.urs : C:\Program Files\GE Multilin\EnerVist...

Save | Restore | Default | FlexLogic Equation Editor // D60_490.urs : C:\Program F

FLEXLOGIC ENTRY	TYPE	SYNTAX
View Graphic	View	View
FlexLogic Entry 1	Virtual Outputs On	Virt Op 1 On (VO1)
FlexLogic Entry 2	TIMER	Timer 1
FlexLogic Entry 3	Assign Virtual Output	= Virt Op 3 (VO3)
FlexLogic Entry 4	Virtual Outputs On	Virt Op 2 On (VO2)
FlexLogic Entry 5	TIMER	Timer 2
FlexLogic Entry 6	Assign Virtual Output	= Virt Op 4 (VO4)
FlexLogic Entry 7	End of List	

D60_490.urs FlexLogic

5

Set both timers (Timer 1 and Timer 2) to 20 ms pickup and 0 ms dropout.

Program the Latching Outputs by making the following changes in the **SETTINGS ⇨⇩ INPUTS/OUTPUTS ⇨⇩ CONTACT OUTPUTS ⇨ CONTACT OUTPUT H1a** and **CONTACT OUTPUT H1c** menus (assuming an H4L module):

OUTPUT H1a OPERATE: "VO1"
OUTPUT H1a RESET: "VO4"
OUTPUT H1c OPERATE: "VO2"
OUTPUT H1c RESET: "VO3"

Application example 4

A latching contact H1a is to be controlled from a single virtual output VO1. The contact is to remain closed as long as VO1 is high, and is to remain opened when VO1 is low. Program the relay as follows.

Write the following FlexLogic equation (EnerVista example shown).

FlexLogic Equation Editor // D60_490.urs : C:\Program Files\GE Multilin\EnerVist...

Save | Restore | Default | Reset

FLEXLOGIC ENTRY	TYPE	SYNTAX
View Graphic	View	View
FlexLogic Entry 1	Virtual Outputs On	Virt Op 1 On (VO1)
FlexLogic Entry 2	NOT	1 Input
FlexLogic Entry 3	Assign Virtual Output	= Virt Op 2 (VO2)
FlexLogic Entry 4	End of List	

D60_490.urs FlexLogic

Program the Latching Outputs by making the following changes in the **SETTINGS ⇨⇩ INPUTS/OUTPUTS ⇨⇩ CONTACT OUTPUTS ⇨ CONTACT OUTPUT H1a** menu (assuming an H4L module):

OUTPUT H1a OPERATE: "VO1"
OUTPUT H1a RESET: "VO2"

5.9.4 Virtual outputs

SETTINGS ⇨⇩ INPUTS/OUTPUTS ⇨⇩ VIRTUAL OUTPUTS ⇨ VIRTUAL OUTPUT 1(96)

■ VIRTUAL OUTPUT 1 ■	⇔	VIRTUAL OUTPUT 1 ID Virt Op 1	Range: up to 20 alphanumeric characters
	⇧	VIRTUAL OUTPUT 1 EVENTS: Disabled	Range: Disabled, Enabled

The virtual inputs and outputs are digital signals associated with UR-series internal logic signals. Virtual inputs include signals generated by the local user interface. The virtual outputs are outputs of FlexLogic equations used to customize the device. Virtual outputs can also serve as virtual inputs to FlexLogic equations.

There are 96 virtual outputs that can be assigned using FlexLogic. If not assigned, the output is forced to 'OFF' (Logic 0). An ID also can be assigned to each virtual output. Virtual outputs are resolved in each pass through the evaluation of the FlexLogic equations. Any change of state of a virtual output can be logged as an event if programmed to do so.

For example, if Virtual Output 1 is the trip signal from FlexLogic and the trip relay is used to signal events, the settings is programmed as follows:

VIRTUAL OUTPUT 1 ID: "Trip"
VIRTUAL OUTPUT 1 EVENTS: "Disabled"

5.9.5 Direct inputs and outputs

5.9.5.1 Overview

The relay provides eight direct inputs conveyed on communications channel 1 (numbered 1-1 through 1-8) and eight direct inputs conveyed on communications channel 2 (on three-terminal systems only, numbered 2-1 through 2-8). The user must program the remote relay connected to channels 1 and 2 of the local relay by assigning the desired FlexLogic operand to be sent via the selected communications channel.

This relay allows the user to create distributed protection and control schemes via dedicated communications channels. Some examples are directional comparison pilot schemes and transfer tripping. Note that failures of communications channel affect direct input/output functionality. The 87L function must be enabled to utilize the direct inputs.

Direct input and output FlexLogic operands to be used at the local relay are assigned as follows:

- Direct input/output 1-1 through direct input/output 1-8 for communications channel 1
- Direct input/output 2-1 through direct input/output 2-8 for communications channel 2 (three-terminal systems only)

On the two-terminal, two channel system (redundant channel), direct outputs 1-1 to 1-8 are sent over both channels simultaneously and are received separately as direct inputs 1-1 to 1-8 at channel 1 and direct inputs 2-1 to 2-8 at channel 2. Therefore, to take advantage of redundancy, the respective operands from channel 1 and 2 can be ORed with FlexLogic or mapped separately.

5.9.5.2 Direct inputs

SETTINGS ⇨⇩ INPUTS/OUTPUTS ⇨⇩ DIRECT ⇨⇩ DIRECT INPUTS

■ DIRECT INPUTS ■	⇔	DIRECT INPUT 1-1 DEFAULT: Off	Range: Off, On
		⇩	
	⇧⇩	DIRECT INPUT 1-8 DEFAULT: Off	Range: Off, On
	⇧⇩	DIRECT INPUT 2-1 DEFAULT: Off	Range: Off, On
		⇩	
	⇧	DIRECT INPUT 2-8 DEFAULT: Off	Range: Off, On

DIRECT INPUT 1-1(8) DEFAULT — Selects the logic state of this particular bit used for this point if the local relay has just completed startup or the local communications channel is declared to have failed. Setting **DIRECT INPUT 1-1(8) DEFAULT** to "On" means that the corresponding local FlexLogic operand (DIRECT I/P 1-1(8)) has logic state "1" on relay startup or during communications channel failure. When the channel is restored, the operand logic state reflects the actual state of the corresponding remote direct output.

5.9.5.3 Direct outputs

SETTINGS ⇨⇩ INPUTS/OUTPUTS ⇨⇩ DIRECT ⇨⇩ DIRECT OUTPUTS

■ **DIRECT OUTPUTS** ■	⇔	**DIRECT OUTPUT 1-1: Off**	Range: FlexLogic operand
	⇩		
	⇕	**DIRECT OUTPUT 1-8: Off**	Range: FlexLogic operand
	⇕	**DIRECT OUTPUT 2-1: Off**	Range: FlexLogic operand
	⇩		
	⇧	**DIRECT OUTPUT 2-8: Off**	Range: FlexLogic operand

The relay provides eight direct outputs that are conveyed on communications channel 1 (numbered 1-1 through 1-8) and eight direct outputs that are conveyed on communications channel 2 (numbered 2-1 through 2-8). Each digital point in the message must be programmed to carry the state of a specific FlexLogic operand. The settings are used to select the operand that represents a specific function (as selected by the user) to be transmitted.

Direct outputs 2-1 to 2-8 are functional in three-terminal systems.

Figure 5-236: Direct inputs/outputs logic (example for L90 shown)

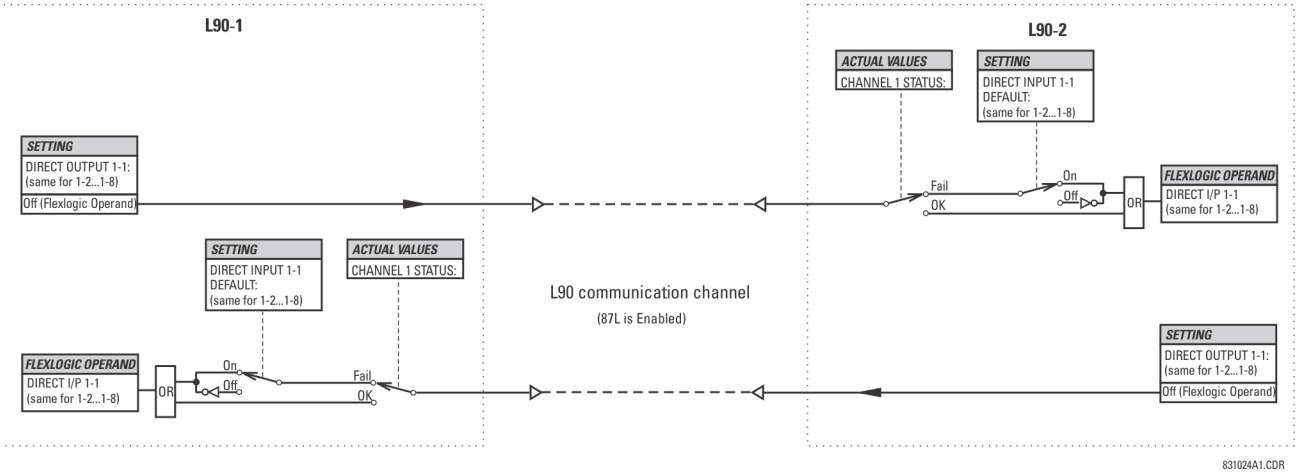

5.9.6 Resetting

5.9.6.1 Enhanced and basic front panels

SETTINGS ⇨⇩ INPUTS/OUTPUTS ⇨⇩ RESETTING

■ **RESETTING** ■	⇔	**RESET OPERAND: Off**	Range: FlexLogic operand

5.9.6.2 Graphical front panel

SETTINGS ⇨⇩ INPUTS/OUTPUTS ⇨⇩ RESETTING

■ **RESETTING** ■	⇔	**RESET OPERAND:** **Off**	Range: FlexLogic operand
	⇧	**RESET ANNUNCIATOR:** **Off**	Range: FlexLogic operand

Some events can be programmed to latch the front panel LED event indicators, target messages, and/or graphical front panel annunciator windows. Once set, the latching mechanism holds the latched indicators, messages, or windows in the set state after the initiating condition has cleared until a **RESET** command is received to return these latches (not including FlexLogic latches) to the reset state where the initiating condition has cleared. The **RESET** command can be sent from the front panel **RESET** button, a remote device via a communications channel, or any selected operand. The Modbus execute function 05h with operation code 1 command is also available to perform the same function as the front panel **RESET** key.

RESET OPERAND — The three sources of **RESET** commands each activates the RESET OP FlexLogic operand. Each individual source of a **RESET** command also activates its individual operand RESET OP (PUSHBUTTON), RESET OP (COMMS), or RESET OP (OPERAND) to identify the source of the command. Each of these three operands generates an event in the event record when activated. The **RESET OPERAND** setting here selects the operand that activates the RESET OP (OPERAND) operand.

RESET ANNUNCIATOR — Used to select a FlexLogic operand that when activated acknowledges/resets all annunciator windows on the graphical front panel. The other methods to acknowledge/reset annunciator windows include:

- On the displayed page, press the **RESET** pushbutton with none of the annunciator windows selected to acknowledge/reset all annunciator windows on that page
- To acknowledge/reset a specific annunciator window, use the Up, Down, Left and Right pushbuttons to select the window, and press the **RESET** or **ENTER** pushbutton
- All annunciator windows can be reset remotely by programming a Virtual Input (for example Virtual Input 1) as the input to the **RESET ANNUNCIATOR** setting. Then the Modbus execute function 05h with operation code 1000h command (or function 10h with address 400h) is used to set the state of Virtual Input 1.

For the **RESET ANNUNCIATOR** setting, the RESET ANCTR OP FlexLogic operand is activated by the two sources of **RESET** command, operand source and manual source. Each individual source of a **RESET ANNUNCIATOR** command also activates its individual operand RESET OP (OPRD) or RESET ANCTR OP (MNUL) to identify the source of the command. Each of these two operands generates an event in the event record when activated. The setting here selects the operand that activates the RESET ANCTR OP (OPRD) operand. The **RESET** pushbutton on the front panel or the reset command from the software activates the RESET ANCTR OP (MNUL) operand.

5.10 Transducer inputs/outputs

5.10.1 DCmA inputs

SETTINGS ⇨⇩ TRANSDUCER I/O ⇨⇩ DCMA INPUTS ⇨ DCMA INPUT H1(U8)

■ **DCMA INPUT H1** ■	⇔	**DCMA INPUT H1** **FUNCTION: Disabled**	Range: Disabled, Enabled
	⇩	**DCMA INPUT H1 ID:** **DCMA Ip 1**	Range: up to 20 alphanumeric characters
	⇩	**DCMA INPUT H1** **UNITS: μA**	Range: six alphanumeric characters
	⇩	**DCMA INPUT H1** **RANGE: 0 to -1 mA**	Range: 0 to –1 mA, 0 to +1 mA, –1 to +1 mA, 0 to 5 mA, 0 to 10mA, 0 to 20 mA, 4 to 20 m
	⇩	**DCMA INPUT H1 MIN** **VALUE: 0.000**	Range: –9999.999 to +9999.999 in steps of 0.001

⇧	**DCMA INPUT H1 MAX VALUE: 0.000**	Range: –9999.999 to +9999.999 in steps of 0.001

The L90 is provided with optional DCmA capability. This feature is specified as an option at the time of ordering. See the Order Codes section in chapter 2 for details.

Hardware and software are provided to receive signals from external transducers and to convert these signals into a digital format for use as required. The relay accepts inputs in the range of –1 to +20 mA DC, suitable for use with most common transducer output ranges; all inputs are assumed to be linear over the complete range. Hardware details are contained in chapter 3.

Before the DCmA input signal can be used, the value of the signal measured by the relay must be converted to the range and quantity of the external transducer primary input parameter, such as DC voltage or temperature. The relay simplifies this process by internally scaling the output from the external transducer and displaying the actual primary parameter.

DCmA input channels are arranged in a manner similar to CT and VT channels. Configure the individual channels with the settings shown here.

The channels are arranged in sub-modules of two channels, numbered from 1 through 8 from top to bottom. On power-up, the relay automatically generates configuration settings for every channel, based on the order code, in the same general manner that is used for CTs and VTs. Each channel is assigned a slot letter followed by the row number, 1 through 8 inclusive, which is used as the channel number. The relay generates an actual value for each available input channel.

Settings are generated automatically for every channel available in the specific relay as shown above for the first channel of a type 5F transducer module installed in slot H.

The function of the channel can be "Enabled" or "Disabled." If "Disabled," no actual values are created for the channel. An alphanumeric "ID" is assigned to each channel; this ID is included in the channel actual value, along with the programmed units associated with the parameter measured by the transducer, such as volts, °C, megawatts, and so on. This ID is also used to reference the channel as the input parameter to features designed to measure this type of parameter. The **DCMA INPUT H1 RANGE** setting specifies the mA DC range of the transducer connected to the input channel.

The **DCMA INPUT H1 MIN VALUE** and **DCMA INPUT H1 MAX VALUE** settings are used to program the span of the transducer in primary units. For example, a temperature transducer might have a span from 0 to 250 °C; in this case the **DCMA INPUT H1 MIN VALUE** value is "0" and the **DCMA INPUT H1 MAX VALUE** value is "250." Another example is a watts transducer with a span from –20 to +180 MW; in this case the **DCMA INPUT H1 MIN VALUE** value is "–20" and the **DCMA INPUT H1 MAX VALUE** value is "180." Intermediate values between the minimum and maximum values are scaled linearly.

5.10.2 RTD inputs

SETTINGS ⇨⇩ TRANSDUCER I/O ⇨⇩ RTD INPUTS ⇨ RTD INPUT H1(U8)

■ **RTD INPUT H1** ■	⇔	**RTD INPUT H1 FUNCTION: Disabled**	Range: Disabled, Enabled
	⇩	**RTD INPUT H1 ID: RTD Ip 1**	Range: up to 20 alphanumeric characters
	⇧	**RTD INPUT H1 TYPE: 100Ω Platinum**	Range: 100Ω Nickel, 10Ω Copper, 100Ω Platinum, 120Ω Nickel

Hardware and software is provided to receive signals from external resistance temperature detectors and convert these signals into a digital format for use as required. These channels are intended to be connected to any of the RTD types in common use. Specific hardware details are contained in chapter 3.

RTD input channels are arranged in a manner similar to CT and VT channels. The user configures individual channels with the settings shown here.

The channels are arranged in sub-modules of two channels, numbered from 1 through 8 from top to bottom. On power-up, the relay automatically generates configuration settings for every channel, based on the order code, in the same general manner that is used for CTs and VTs. Each channel is assigned a slot letter followed by the row number, 1 through 8 inclusive, which is used as the channel number. The relay generates an actual value for each available input channel.

Settings are automatically generated for every channel available in the specific relay as shown above for the first channel of a type 5C transducer module installed in the first available slot.

The function of the channel can be either "Enabled" or "Disabled." If "Disabled," there is not an actual value created for the channel. An alphanumeric ID is assigned to the channel; this ID is included in the channel actual values. It is also used to reference the channel as the input parameter to features designed to measure this type of parameter. Selecting the type of RTD connected to the channel configures the channel.

Actions based on RTD overtemperature, such as trips or alarms, are done in conjunction with the FlexElements feature. In FlexElements, the operate level is scaled to a base of 100°C. For example, a trip level of 150°C is achieved by setting the operate level at 1.5 pu. FlexElement operands are available to FlexLogic for further interlocking or to operate an output contact directly.

See the following table for reference temperature values for each RTD type.

Table 5-45: RTD temperature vs. resistance

Temperature		Resistance (in ohms)			
°C	**°F**	**100 Ω Pt (DIN 43760)**	**120 Ω Ni**	**100 Ω Ni**	**10 Ω Cu**
–50	–58	80.31	86.17	71.81	7.10
–40	–40	84.27	92.76	77.30	7.49
–30	–22	88.22	99.41	82.84	7.88
–20	–4	92.16	106.15	88.45	8.26
–10	14	96.09	113.00	94.17	8.65
0	32	100.00	120.00	100.00	9.04
10	50	103.90	127.17	105.97	9.42
20	68	107.79	134.52	112.10	9.81
30	86	111.67	142.06	118.38	10.19
40	104	115.54	149.79	124.82	10.58
50	122	119.39	157.74	131.45	10.97
60	140	123.24	165.90	138.25	11.35
70	158	127.07	174.25	145.20	11.74
80	176	130.89	182.84	152.37	12.12
90	194	134.70	191.64	159.70	12.51
100	212	138.50	200.64	167.20	12.90
110	230	142.29	209.85	174.87	13.28
120	248	146.06	219.29	182.75	13.67
130	266	149.82	228.96	190.80	14.06
140	284	153.58	238.85	199.04	14.44
150	302	157.32	248.95	207.45	14.83
160	320	161.04	259.30	216.08	15.22
170	338	164.76	269.91	224.92	15.61
180	356	168.47	280.77	233.97	16.00
190	374	172.46	291.96	243.30	16.39
200	392	175.84	303.46	252.88	16.78
210	410	179.51	315.31	262.76	17.17
220	428	183.17	327.54	272.94	17.56
230	446	186.82	340.14	283.45	17.95
240	464	190.45	353.14	294.28	18.34
250	482	194.08	366.53	305.44	18.73

5.10.3 DCmA outputs

SETTINGS ⇨⇩ TRANSDUCER I/O ⇨⇩ DCMA OUTPUTS ⇨ DCMA OUTPUT H1(U8)

■ **DCMA OUTPUT H1** ■	⇔	**DCMA OUTPUT H1** **SOURCE: Off**	Range: Off, any analog actual value parameter
	⇩	**DCMA OUTPUT H1** **RANGE: –1 to 1 mA**	Range: –1 to 1 mA, 0 to 1 mA, 4 to 20 mA
	⇩	**DCMA OUTPUT H1** **MIN VAL: 0.000 pu**	Range: –90.000 to 90.000 pu in steps of 0.001
	⇧	**DCMA OUTPUT H1** **MAX VAL: 1.000 pu**	Range: –90.000 to 90.000 pu in steps of 0.001

Hardware and software is provided to generate DCmA signals that allow interfacing with external equipment. Hardware details are contained in chapter 3. The DCmA output channels are arranged in a manner similar to transducer input or CT and VT channels. The user configures individual channels with the settings as follows.

The channels are arranged in sub-modules of two channels, numbered 1 through 8 from top to bottom. On power-up, the relay automatically generates configuration settings for every channel, based on the order code, in the same manner used for CTs and VTs. Each channel is assigned a slot letter followed by the row number, 1 through 8 inclusive, which is used as the channel number.

Both the output range and a signal driving a given output are user-programmable via the following settings menu (an example for channel M5 is shown).

The relay checks the driving signal (*x* in equations below) for the minimum and maximum limits, and subsequently re-scales so the limits defined as **MIN VAL** and **MAX VAL** match the output range of the hardware defined as **RANGE**. The following equation is applied:

$$I_{out} = \begin{cases} I_{min} & \text{if } x < \textbf{MIN VAL} \\ I_{max} & \text{if } x > \textbf{MAX VAL} \\ k(x - \textbf{MIN VAL}) + I_{min} & \text{otherwise} \end{cases}$$

Eq. 5-49

where

x is a driving signal specified by the **SOURCE** setting
I_{min} and I_{max} are defined by the **RANGE** setting
k is a scaling constant calculated as:

$$k = \frac{I_{max} - I_{min}}{\textbf{MAX VAL} - \textbf{MIN VAL}}$$

Eq. 5-50

The feature is intentionally inhibited if the **MAX VAL** and **MIN VAL** settings are entered incorrectly, for example when **MAX VAL** – **MIN VAL** < 0.1 pu. The resulting characteristic is illustrated in the following figure.

Figure 5-237: DCmA output characteristic

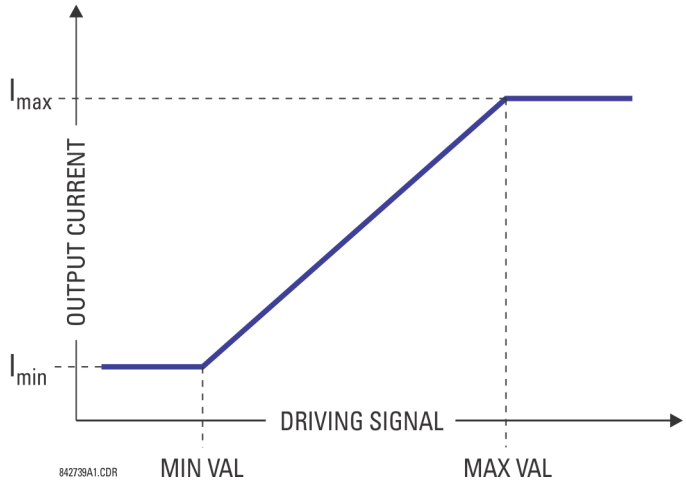

Settings

DCMA OUTPUT H1 SOURCE — This setting specifies an internal analog value to drive the analog output. Actual values (FlexAnalog parameters) such as power, current amplitude, voltage amplitude, power factor, etc. can be configured as sources driving DCmA outputs. See Appendix A for a list of FlexAnalog parameters.

DCMA OUTPUT H1 RANGE — This setting allows selection of the output range. Each DCmA channel can be set independently to work with different ranges. The three most commonly used output ranges are available.

DCMA OUTPUT H1 MIN VAL — This setting allows setting the minimum limit for the signal that drives the output. This setting is used to control the mapping between an internal analog value and the output current. The setting is entered in per-unit values. The base units are defined in the same manner as the FlexElement base units.

DCMA OUTPUT H1 MAX VAL — This setting allows setting the maximum limit for the signal that drives the output. This setting is used to control the mapping between an internal analog value and the output current. The setting is entered in per-unit values. The base units are defined in the same manner as the FlexElement base units.

NOTE

The **DCMA OUTPUT H1 MIN VAL** and **DCMA OUTPUT H1 MAX VAL** settings are ignored for power factor base units (i.e. if the **DCMA OUTPUT H1 SOURCE** is set to FlexAnalog value based on power factor measurement).

Three application examples follow.

Example: Power monitoring

A three phase active power on a 13.8 kV system measured via UR-series relay source 1 is to be monitored by the DCmA H1 output of the range of –1 to 1 mA. The following settings are applied on the relay: CT ratio = 1200:5, VT secondary 115, VT connection is delta, and VT ratio = 120. The nominal current is 800 A primary and the nominal power factor is 0.90. The power is to be monitored in both importing and exporting directions and allow for 20% overload compared to the nominal.

The nominal three-phase power is:

$$P = \sqrt{3} \times 13.8\ \text{kV} \times 0.8\ \text{kA} \times 0.9 = 17.21\ \text{MW} \qquad \textbf{Eq. 5-51}$$

The three-phase power with 20% overload margin is:

$$P_{max} = 1.2 \times 17.21\ \text{MW} = 20.65\ \text{MW} \qquad \textbf{Eq. 5-52}$$

The base unit for power (refer to the FlexElements section in this chapter for additional details) is:

$$P_{BASE} = 115\ \text{V} \times 120 \times 1.2\ \text{kA} = 16.56\ \text{MW} \qquad \textbf{Eq. 5-53}$$

The minimum and maximum power values to be monitored (in pu) are:

$$\text{minimum power} = \frac{-20.65\ \text{MW}}{16.56\ \text{MW}} = -1.247\ \text{pu}, \quad \text{maximum power} = \frac{20.65\ \text{MW}}{16.56\ \text{MW}} = 1.247\ \text{pu} \qquad \textbf{Eq. 5-54}$$

The following settings are entered:

DCMA OUTPUT H1 SOURCE: "SRC 1 P"
DCMA OUTPUT H1 RANGE: "–1 to 1 mA"
DCMA OUTPUT H1 MIN VAl: "–1.247 pu"
DCMA OUTPUT H1 MAX VAL: "1.247 pu"

With the above settings, the output will represent the power with the scale of 1 mA per 20.65 MW. The worst-case error for this application can be calculated by superimposing the following two sources of error:

- ±0.5% of the full scale for the analog output module, or ±0.005 x (1-(-1)) x 20.65 MW = ±0.207 MW
- ±1% of reading error for the active power at power factor of 0.9

For example at the reading of 20 MW, the worst-case error is 0.01 × 20 MW + 0.207 MW = 0.407 MW.

Example: Current monitoring

The phase A current (true RMS value) is to be monitored via the H2 current output working with the range from 4 to 20 mA. The CT ratio is 5000:5 and the maximum load current is 4200 A. The current is to be monitored from 0 A upwards, allowing for 50% overload.

The phase current with the 50% overload margin is:

$$I_{max} = 1.5 \times 4.2\ \text{kA} = 6.3\ \text{kA} \qquad \textbf{Eq. 5-55}$$

5

The base unit for current (see the FlexElements section in this chapter for additional details) is:

$$I_{BASE} = 5\ \text{kA} \qquad \textbf{Eq. 5-56}$$

The minimum and maximum power values to be monitored (in pu) are:

$$\text{minimum current} = \frac{0\ \text{kA}}{5\ \text{kA}} = 0\ \text{pu}, \quad \text{maximum current} = \frac{6.3\ \text{kA}}{5\ \text{kA}} = 1.26\ \text{pu} \qquad \textbf{Eq. 5-57}$$

The following settings are entered:

DCMA OUTPUT H2 SOURCE: "SRC 1 Ia RMS"
DCMA OUTPUT H2 RANGE: "4 to 20 mA"
DCMA OUTPUT H2 MIN VAL: "0.000 pu"
DCMA OUTPUT H2 MAX VAL: "1.260 pu"

The worst-case error for this application can be calculated by superimposing the following two sources of error:

- ±0.5% of the full scale for the analog output module, or ±0.005 x (20 - 4) x 6.3 kA = ±0.504 kA
- ±0.25% of reading or ±0.1% of rated (whichever is greater) for currents between 0.1 and 2.0 of nominal

For example, at the reading of 4.2 kA, the worst-case error is max(0.0025 × 4.2 kA, 0.001 × 5 kA) + 0.504 kA = 0.515 kA.

Example: Voltage monitoring

A positive-sequence voltage on a 400 kV system measured via source 2 is to be monitored by the DCmA H3 output with a range of 0 to 1 mA. The VT secondary setting is 66.4 V, the VT ratio setting is 6024, and the VT connection setting is "Delta." The voltage is to be monitored in the range from 70% to 110% of nominal.

The minimum and maximum positive-sequence voltages to be monitored are:

$$V_{min} = 0.7 \times \frac{400\ \text{kV}}{\sqrt{3}} = 161.66\ \text{kV}, \quad V_{max} = 1.1 \times \frac{400\ \text{kV}}{\sqrt{3}} = 254.03\ \text{kV} \qquad \textbf{Eq. 5-58}$$

The base unit for voltage (see the FlexElements section in this chapter for additional details) is:

$$V_{BASE} = 0.0664\ \text{kV} \times 6024 = 400\ \text{kV} \qquad \textbf{Eq. 5-59}$$

The minimum and maximum voltage values to be monitored (in pu) are:

$$\text{minimum voltage} = \frac{161.66\ \text{kV}}{400\ \text{kV}} = 0.404\ \text{pu}, \quad \text{maximum voltage} = \frac{254.03\ \text{kV}}{400\ \text{kV}} = 0.635\ \text{pu} \qquad \textbf{Eq. 5-60}$$

The following settings are entered:

DCMA OUTPUT H3 SOURCE: "SRC 2 V_1 mag"
DCMA OUTPUT H3 RANGE: "0 to 1 mA"
DCMA OUTPUT H3 MIN VAL: "0.404 pu"
DCMA OUTPUT H3 MAX VAL: "0.635 pu"

The limit settings differ from the expected 0.7 pu and 1.1 pu because the relay calculates the positive-sequence quantities scaled to the phase-to-ground voltages, even if the VTs are connected in "Delta" (see the Metering Conventions section in chapter 6), while at the same time the VT nominal voltage is 1 pu for the settings. Consequently the settings required in this example differ from naturally expected by the factor of $\sqrt{3}$.

The worst-case error for this application could be calculated by superimposing the following two sources of error:

- ±0.5% of the full scale for the analog output module, or ± 0.005 x (1-0) x 254.03 kV = ±1.27 kV
- ±0.5% of reading

For example, under nominal conditions, the positive-sequence reads 230.94 kV and the worst-case error is 0.005 × 230.94 kV + 1.27 kV = 2.42 kV.

5.11 Testing

5.11.1 Test mode function

SETTINGS ⇨⇩ TESTING

■ **TESTING** ■	⇔	**TEST MODE FUNCTION: Disabled**	Range: Disabled, Test-Blocked, Test

The L90 provides a test facility to verify the functionality of contact inputs and outputs, some communication functions and the phasor measurement unit (where applicable), using simulated conditions. It is accessible in the software and graphical front panel.

The test mode can be in any of three states: Disabled, Test-Blocked, or Test.

The Disabled mode is intended for normal in service operation; relay protection, control and communication function is normal. Test features are disabled, except channel tests and phasor measurement unit tests remain usable when provided.

The Test-Blocked mode is intended to allow the relay to be quickly placed in a state where the relay cannot negatively impact the power system or other parts of the substation automation system. This is to allow changing settings, loading new firmware, changing hardware modules, and changing communication connections. As far as practical all relay output signals are blocked. Contact outputs are de-energized, latching outputs are frozen. Commands to HardFiber Bricks are blocked. GOOSE transmissions have their "simulation" flag (also known as "test" flag) set, which results in the messages not being accepted by compliant receiving devices that do not have a "Sim" data attribute set. The quality attribute of values that can be output via IEC 61850 MMS services are set to "invalid," which results in the values not being used for operational purposes by compliant receiving devices. Direct I/O channel tests and PMU tests are usable on applicable models.

The Test mode is intended for testing involving forcing relay operation by test signal injection and verifying correct relay output. This mode is also for tests to verify the relay outputs (both contact and communications) have the intended impact on specific power system devices or on specific other substation automation devices. Contact outputs can be selectively enabled or forced as described in the following two sections. Shared outputs to Bricks have their test mode flag raised, which results in their value only being accepted by relays also in forcible/test mode. GOOSE transmissions have the

"simulation" flag set, which results in these only being accepted by other devices that have their "Sim" data attribute set. The "Sim" data attribute in the relay is set, so that if GOOSE messages are received with the "simulation" flag set, these are used in place of the normal messages. The quality attribute of values that are output via IEC 61850 MMS services are set to "valid" + "test," which signals that the values are not to be used for operational purposes.

Otherwise, the UR remains fully operational while in Test mode, allowing for various testing procedures. In particular, the protection and control elements, and FlexLogic function normally. Other than the IEC 61850 protocol, communications based inputs and outputs remain fully operational. The test procedure must take this into account. Direct I/O channel tests and PMU tests are usable on applicable models.

The test mode can be selected either through the front panel, through EnerVista UR Setup, or through IEC 61850 control to LLN0.Mod. LLN0.Mod.ctlVal "on" selects Disabled, "test/blocked" selects Test-Blocked, and "test" selects Test. The **TEST MODE FUNCTION** setting can only be changed by a direct user command. Following a restart, power up, settings upload, or firmware upgrade, the test mode remains at the last programmed value. This allows a UR that has been placed in test-blocked mode to remain isolated during testing and maintenance activities.

5.11.2 Test mode forcing

SETTINGS ⇨⇩ TESTING ⇨ TEST MODE FORCING

■ **TESTING** ■	⇔	**TEST MODE FORCING:** **On**	Range: FlexLogic operand

When in Test mode, the operand selected by the **TEST MODE FORCING** setting dictates further response of the L90 to testing conditions, as described in the following two sections.

The test mode state is indicated on the relay front panel by a combination of the Test Mode LED indicator, the In-Service LED indicator, and by the critical fail relay, as shown in the following table.

Table 5-46: Test mode operation

TEST MODE FUNCTION	In-service LED	Test mode LED	Critical fail relay	TEST MODE FORCING	Contact input and output behavior
Disabled	Unaffected	Off	Normal	No effect	Normal
Test-Blocked	Off	On	De-energized	No effect	Contact outputs disabled
Test	Off	Flashing	De-energized	Off	Normal
				On	Controlled by forcing features

NOTE

On restart, the **TEST MODE FORCING** setting and the force contact input and force contact output settings revert to their default states.

5.11.3 Phasor Measurement Unit test values

SETTINGS ⇨⇩ TESTING ⇨⇩ PMU TEST VALUES ⇨ PMU 1 TEST VALUES

■ **PMU 1** ■ **TEST VALUES**	⇔	**PMU 1 TEST** **FUNCTION: Disabled**	Range: Enabled, Disabled
	⇩	**PMU 1 VA TEST** **MAGNITUDE: 500.00 kV**	Range: 0.00 to 700.00 kV in steps of 0.01
	⇩	**PMU 1 VA TEST** **ANGLE: 0.00°**	Range: –180.00 to 180.00° in steps of 0.05
	⇩	**PMU 1 VB TEST** **MAGNITUDE: 500.00 kV**	Range: 0.00 to 700.00 kV in steps of 0.01
	⇩	**PMU 1 VB TEST** **ANGLE: –120.00°**	Range: –180.00 to 180.00° in steps of 0.05

⇕	PMU 1 VC TEST MAGNITUDE: 500.00 kV	Range: 0.00 to 700.00 kV in steps of 0.01
⇕	PMU 1 VC TEST ANGLE: 120.00°	Range: –180.00 to 180.00° in steps of 0.05
⇕	PMU 1 VX TEST MAGNITUDE: 500.00 kV	Range: 0.00 to 700.00 kV in steps of 0.01
⇕	PMU 1 VX TEST ANGLE: 0.00°	Range: –180.00 to 180.00° in steps of 0.05
⇕	PMU 1 IA TEST MAGNITUDE: 1.000 kA	Range: 0.000 to 9.999 kA in steps of 0.001
⇕	PMU 1 IA TEST ANGLE: –10.00°	Range: –180.00 to 180.00° in steps of 0.05
⇕	PMU 1 IB TEST MAGNITUDE: 1.000 kA	Range: 0.000 to 9.999 kA in steps of 0.001
⇕	PMU 1 IB TEST ANGLE: –130.00°	Range: –180.00 to 180.00° in steps of 0.05
⇕	PMU 1 IC TEST MAGNITUDE: 1.000 kA	Range: 0.000 to 9.999 kA in steps of 0.001
⇕	PMU 1 IC TEST ANGLE: 110.00°	Range: –180.00 to 180.00° in steps of 0.05
⇕	PMU 1 IG TEST MAGNITUDE: 0.000 kA	Range: 0.000 to 9.999 kA in steps of 0.001
⇕	PMU 1 IG TEST ANGLE: 0.00°	Range: –180.00 to 180.00° in steps of 0.05
⇕	PMU 1 TEST FREQUENCY: 60.000 Hz	Range: 20.000 to 70.000 Hz in steps of 0.001
⇧	PMU 1 TEST df/dt: 0.00 Hz/s	Range: –10.00 to 10.00 Hz/s in steps of 0.01

The relay must be in test mode to use the PMU test mode. That is, the **TESTING ⇨ TEST MODE FUNCTION** setting must be "Enabled," and the **TESTING ⇨⇩ TEST MODE INITIATE** initiating signal must be "On."

During the PMU test mode, the physical channels (VA, VB, VC, VX, IA, IB, IC, and IG), frequency, and rate of change of frequency are substituted with user values, while the symmetrical components are calculated from the physical channels. The test values are not explicitly marked in the outgoing data frames. When required, it is recommended to use the user-programmable digital channels to signal the IEEE C37.118 client that test values are being sent in place of the real measurements.

The UR Synchrophasor Implementation defines a test mode that sends a pre-defined set of synchrophasors out over the communication channel when the test mode function setting is enabled. In test mode, the following actions take place:

- The Data Invalid / Test Mode bit (bit 15 in the STAT word) is set
- The Sim bit in all output datasets is set

5.11.4 Force contact inputs

SETTINGS ⇨⇩ TESTING ⇨⇩ FORCE CONTACT INPUTS

■ FORCE CONTACT ■ INPUTS	⇔	FORCE Cont Ip 1 : Normal	Range: Normal, Open, Closed
	⇕	FORCE Cont Ip 2 : Normal	Range: Normal, Open, Closed
		⇩	

⇧ **FORCE Cont Ip xx**
: Normal Range: Normal, Open, Closed

The force contact inputs feature provides a method of performing checks on the function of all contact inputs.

While in Test mode, the relay contact inputs can be pre-programmed to respond in the following ways:

- If set to "Normal," the input remains fully operational. It is controlled by the voltage across its input terminals and can be turned on and off by external circuitry. Select this value if a given input must be operational during the test. This includes, for example, an input initiating the test, or being a part of a user pre-programmed test sequence.
- If set to "Open," the input is forced to report as opened (Logic 0) while the operand selected by **TEST MODE FORCING** setting is On, regardless of the voltage across the input terminals. While the selected operand is Off, the input behaves as it does when in service.
- If set to "Closed," the input is forced to report as closed (Logic 1) while the operand selected by **TEST MODE FORCING** setting is On regardless of the voltage across the input terminals. While the selected operand is Off, the input behaves as it does when in service.

NOTE

On restart, the **TEST MODE FORCING** setting and the force contact input and force contact output settings revert to their default states.

5.11.5 Force contact outputs

SETTINGS ⇨⇩ TESTING ⇨⇩ FORCE CONTACT OUTPUTS

5

■ **FORCE CONTACT**
■ **OUTPUTS**

⇔ **FORCE Cont Op 1**
: Normal Range: Normal, Energized, De-energized, Freeze

⇩ **FORCE Cont Op 2**
: Normal Range: Normal, Energized, De-energized, Freeze

⇩

⇧ **FORCE Cont Op xx**
: Normal Range: Normal, Energized, De-energized, Freeze

The force contact outputs feature provides a method of performing checks on the function of all contact outputs.

While in Test mode, the relay contact outputs can be pre-programmed to respond in the following ways:

- If set to "Normal," the contact output remains fully operational. It operates when its control operand is logic 1 and resets when its control operand is logic 0.
- If set to "Energized," the output closes and remains closed while the operand selected by the **TEST MODE FORCING** setting is On, regardless of the status of the operand configured to control the output contact. While the selected operand is Off, the output behaves as it does when in service.
- If set to "De-energized," the output opens and remains opened while the operand selected by the **TEST MODE FORCING** setting is On, regardless of the status of the operand configured to control the output contact. While the selected operand is Off, the output behaves as it does when in service.
- If set to "Freeze," the output retains its position at the instant before the **TEST MODE FUNCTION** was Test and the operand selected by the **TEST MODE FORCING** setting was On, regardless of later changes in the status of the operand configured to control the output contact. While the selected operand is Off, the output behaves as it does when in service.

NOTE

On restart, the **TEST MODE FORCING** setting and the force contact input and force contact output settings revert to their default states.

5.11.6 Channel tests

SETTINGS ⇨⇩ TESTING ⇨⇩ CHANNEL TESTS

■ CHANNEL TESTS ■	⇔	■ LOCAL LOOPBACK ■	See below
	⇧	■ REMOTE LOOPBACK ■	See below

This function checks the communications established by both relays.

■ LOCAL LOOPBACK ■	⇔	LOCAL LOOPBACK FUNCTION: No	Range: Yes, No
	⇧	LOCAL LOOPBACK CHANNEL NUMBER: 1	Range: 1, 2

■ REMOTE LOOPBACK ■	⇔	REMOTE LOOPBACK FUNCTION: No	Range: Yes, No
	⇧	REMOTE LOOPBACK CHANNEL NUMBER: 1	Range: 1, 2

See the Commissioning chapter for information on using the channel tests.

L90 Line Current Differential System

Chapter 6: Actual values

This chapter outlines viewing of data on the front panel and in the software.

6.1 Actual Values menu

■■ ACTUAL VALUES ■■ FRONT PANEL	⇔	■ ■	Access in EnerVista See page 6-3
⇩			
■■ ACTUAL VALUES ■■ STATUS	⇔	■ CONTACT INPUTS ■	See page 6-5
⇩	⇕	■ VIRTUAL INPUTS ■	See page 6-5
	⇕	■ RxGOOSE BOOLEANS ■	See page 6-5
	⇕	■ RxGOOSE DPS ■	See page 6-5
	⇕	■ DIRECT INPUTS ■	See page 6-6
	⇕	■ CONTACT OUTPUTS ■	See page 6-6
	⇕	■ VIRTUAL OUTPUTS ■	See page 6-6
	⇕	■ RxGOOSE ■ STATUS	See page 6-7
	⇕	■ RxGOOSE ■ STATISTICS	See page 6-7
	⇕	■ AUTORECLOSE ■	See page 6-7
	⇕	■ CHANNEL TESTS ■	See page 6-8

■■ ACTUAL VALUES
■■ METERING

■ DIGITAL COUNTERS ■	See page 6-9
■ SELECTOR SWITCHES ■	See page 6-9
■ FLEX STATES ■	See page 6-9
■ ETHERNET ■	See page 6-10
■ REAL TIME CLOCK ■ SYNCHRONIZING	See page 6-10
■ COMM STATUS ■ REMAINING CONNECT	See page 6-11
■ PRP ■	See page 6-11
■ TxGOOSE STATUS ■	See page 6-12
■ 87L DIFFERENTIAL ■ CURRENT	See page 6-16
■ SOURCE SRC 1 ■	See page 6-17
■ SOURCE SRC 2 ■	
■ SOURCE SRC 3 ■	
■ SOURCE SRC 4 ■	
■ SENSITIVE ■ DIRECTIONAL POWER	See page 6-23
■ SYNCHROCHECK ■	See page 6-23
■ TRACKING FREQUENCY ■	See page 6-24
■ FREQUENCY RATE ■ OF CHANGE 1	See page 6-24
■ FREQUENCY RATE ■ OF CHANGE 2	
■ FREQUENCY RATE ■ OF CHANGE 3	
■ FREQUENCY RATE ■ OF CHANGE 4	
■ FLEXELEMENTS ■	See page 6-24
■ RxGOOSE Analogs ■	See page 6-25
■ WATTMETRIC ■ GROUND FAULT 1	See page 6-25
■ WATTMETRIC ■ GROUND FAULT 2	

	⇕	■ PHASOR MEASUREMENT ■ UNIT	See page 6-25
	⇕	■ PMU AGGREGATOR ■	See page 6-26
	⇕	■ VOLTS PER HERTZ 1 ■	See page 6-26
	⇕	■ VOLTS PER HERTZ 2 ■	
	⇕	■ RESTRICTED GROUND ■ FAULT CURRENTS	See page 6-27
	⇕	■ TRANSDUCER I/O ■ DCMA INPUTS	See page 6-27
	⇕	■ TRANSDUCER I/O ■ RTD INPUTS	See page 6-27
⇧	⇧	■ DISTANCE ■	See page 6-27
■■ ACTUAL VALUES ■■ REMOTE RESOURCES	⇔	■ FIELD UNIT U1 ■ ID: U 1	See page 6-29
		⇩	
⇧	⇧	■ FIELD UNIT U8 ■ ID: U 8	
■■ ACTUAL VALUES ■■ RECORDS	⇔	■ FAULT REPORTS ■	See page 6-29
⇩	⇕	■ EVENT RECORDS ■	See page 6-31
	⇕	■ OSCILLOGRAPHY ■	See page 6-33
	⇕	■ DATA LOGGER ■	See page 6-33
	⇕	■ PMU RECORDS ■	See page 6-33
⇧	⇧	■ MAINTENANCE ■	See page 6-34
■■ ACTUAL VALUES ■■ PRODUCT INFO	⇔	■ MODEL INFORMATION ■	See page 6-35
	⇧	■ FIRMWARE REVISIONS ■	See page 6-35

For status reporting, 'On' represents Logic 1 and 'Off' represents Logic 0.

6.2 Front panel

6.2.1 Enhanced and standard front panels

The front panel can be viewed and used in the EnerVista software, for example to view an error message displayed on the front panel.

To view the front panel in EnerVista software:

1. Click **Actual Values > Front Panel**.

Figure 6-1: Front panel use in the software (C60 shown)

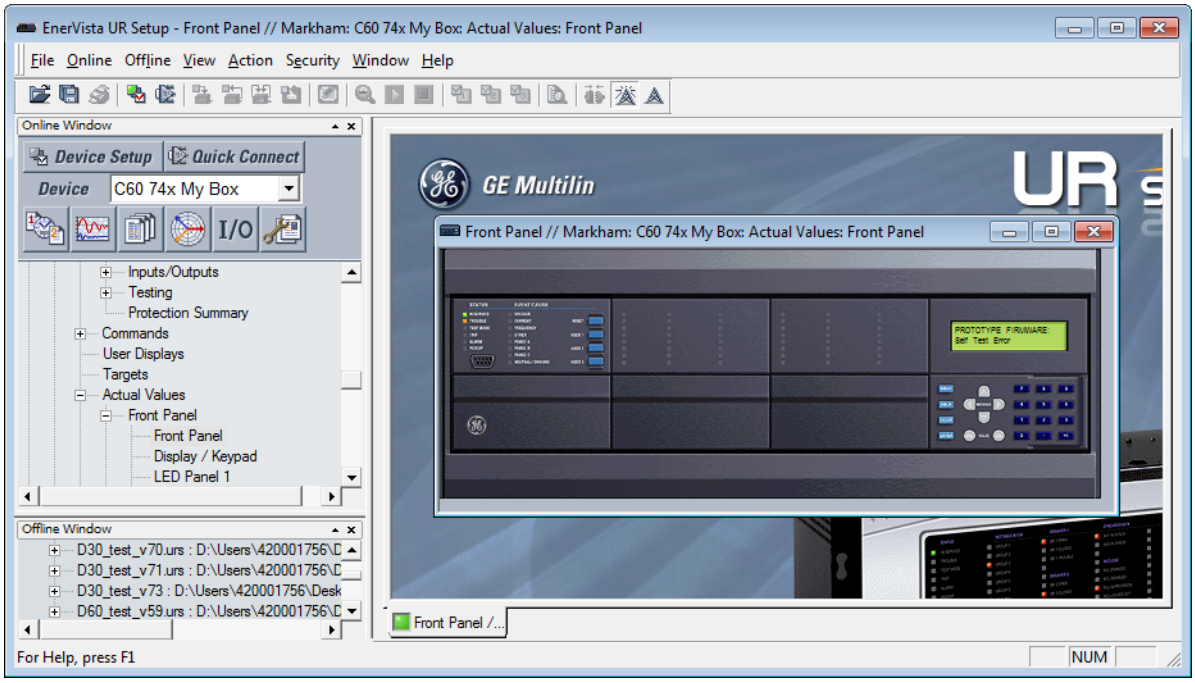

6.2.2 Graphical front panel

SOFTWARE OPTION

The graphical front panel is a hardware option.

Annunciator alarms can be acknowledged and reset in this section.

To view alarms for the graphical front panel in EnerVista:

1. Access **Actual Values > Graphical Panel > Annunciator Panel**. Alarms are listed, allowing remote acknowledgement/ reset.
2. Click the **Acknowledge** or **Reset** button for an alarm.

Figure 6-2: Annunciator alarms displayed in the software)

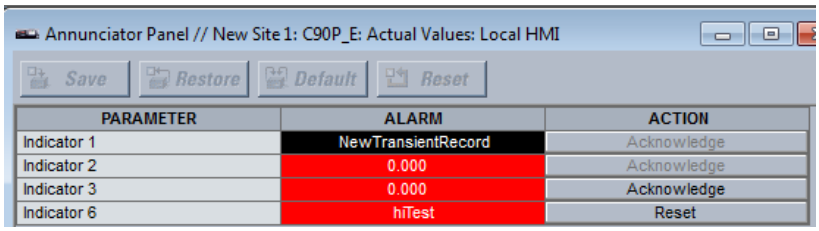

6.3 Status

6.3.1 Contact inputs

ACTUAL VALUES ⇨ STATUS ⇨ CONTACT INPUTS

■ CONTACT INPUTS ■	⇔	Cont Ip 1 Off	Range: On, Off
		⇩	
	⇧	Cont Ip xx Off	Range: On, Off

The present status of the contact inputs is shown here. The first line of a message display indicates the ID of the contact input. For example, 'Cont Ip 1' refers to the contact input in terms of the default name-array index. The second line of the display indicates the logic state of the contact input.

6.3.2 Virtual inputs

ACTUAL VALUES ⇨ STATUS ⇨⇩ VIRTUAL INPUTS

■ VIRTUAL INPUTS ■	⇔	Virt Ip 1 Off	Range: On, Off
		⇩	
	⇧	Virt Ip 64 Off	Range: On, Off

The present status of the 64 virtual inputs is shown here. The first line of a message display indicates the ID of the virtual input. For example, 'Virt Ip 1' refers to the virtual input in terms of the default name. The second line of the display indicates the logic state of the virtual input.

6.3.3 RxGOOSE boolean inputs

ACTUAL VALUES ⇨ STATUS ⇨⇩ RxGOOSE BOOLEANS

■ RxGOOSE BOOLEANS ■	⇔	RxGOOSE BOOLEAN 1 STATUS: Off	Range: On, Off
		⇩	
	⇧	RxGOOSE BOOLEAN 256 STATUS: Off	Range: On, Off

SOFTWARE OPTION

The L90 is provided with optional IEC 61850 capability. This feature is specified as a software option at the time of ordering. See the Order Codes section of chapter 2 for details.

6.3.4 RxGOOSE DPS inputs

ACTUAL VALUES ⇨ STATUS ⇨⇩ RxGOOSE DPS

■ RxGOOSE DPS ■	⇔	RxGOOSE DPS 1 Status: Intermediate	Range: On, Off, Intermediate, Bad
		⇩	
	⇧	RxGOOSE DPS 16 Status: Intermediate	Range: On, Off, Intermediate, Bad

The L90 is provided with optional IEC 61850 capability. This feature is specified as a software option at the time of ordering. See the Order Codes section of chapter 2 for details.

6.3.5 Direct inputs

ACTUAL VALUES ⇨⇩ STATUS ⇨⇩ DIRECT INPUTS

■ DIRECT INPUTS ■	⇔	DIRECT INPUT 1-1: Off	Range: On, Off
		⇩	
	⇩	DIRECT INPUT 1-8: Off	Range: On, Off
	⇩	DIRECT INPUT 2-1: Off	Range: On, Off
		⇩	
	⇧	DIRECT INPUT 2-8: Off	Range: On, Off

The present state of the direct inputs from communications channels 1 and 2 display here. The state displayed is that of the remote point unless channel 1 or 2 has been declared to have "failed", in which case the value shown is the programmed default state defined in the **SETTINGS ⇨⇩ INPUTS/OUTPUTS ⇨⇩ DIRECT ⇨ DIRECT INPUTS** menu.

6.3.6 Contact outputs

ACTUAL VALUES ⇨ STATUS ⇨⇩ CONTACT OUTPUTS

■ CONTACT OUTPUTS ■	⇔	Cont Op 1 Off	Range: On, Off, VOff, VOn, IOn, IOff
		⇩	
	⇧	Cont Op xx Off	Range: On, Off, VOff, VOn, IOn, IOff

The present state of the contact outputs is shown here. The first line of a message display indicates the ID of the contact output. For example, 'Cont Op 1' refers to the contact output in terms of the default name-array index. The second line of the display indicates the logic state of the contact output.

For form-A contact outputs, the state of the voltage and current detectors is displayed as Off, VOff, IOff, On, IOn, and VOn. For form-C contact outputs, the state is displayed as Off or On.

6.3.7 Virtual outputs

ACTUAL VALUES ⇨ STATUS ⇨⇩ VIRTUAL OUTPUTS

■ VIRTUAL OUTPUTS ■	⇔	Virt Op 1 Off	Range: On, Off
		⇩	
	⇧	Virt Op 96 Off	Range: On, Off

The present state of up to 96 virtual outputs is shown here. The first line of a message display indicates the ID of the virtual output. For example, 'Virt Op 1' refers to the virtual output in terms of the default name-array index. The second line of the display indicates the logic state of the virtual output, as calculated by the FlexLogic equation for that output.

6.3.8 RxGOOSE status

ACTUAL VALUES ⇨ STATUS ⇨⇩ RxGOOSE STATUS

■ RxGOOSE ■ STATUS	⇔	**All RxGOOSE Online:** **Yes**	Range: Yes, No
	⇩	**RxGOOSE 1 Status:** **Offline**	Range: Online, Offline
	⇩		
	⇧	**RxGOOSE 64 Status:** **Offline**	Range: Online, Offline

SOFTWARE OPTION

The L90 is provided with optional IEC 61850 capability. This feature is specified as a software option at the time of ordering. See the Order Codes section of chapter 2 for details.

The **All RxGOOSE Online** actual value does not consider RxGOOSE that are not configured or are not used by any RxGOOSE Input.

6.3.9 RxGOOSE statistics

ACTUAL VALUES ⇨ STATUS ⇨⇩ RxGOOSE STATISTICS ⇨⇩ RxGOOSE 1(64)

■ RxGOOSE 1 ■	⇔	**RxGOOSE 1** **stNum: 0**	Range: 0 up to 4,294,967,295
	⇧	**RxGOOSE 1** **sqNum: 0**	Range: 0 up to 4,294,967,295

SOFTWARE OPTION

The L90 is provided with optional IEC 61850 capability. This feature is specified as a software option at the time of ordering. See the Order Codes section of chapter 2 for details.

stNum — State number. The most recently received value in GOOSE message field stNum. The publisher increments stNum each time that the state of one or more of the GOOSE message members is sent with a revised value.

sqNum — Sequence number. The most recently received value in GOOSE message field sqNum. The publisher sets sqNum to zero each time the state of one or more of the GOOSE message members is sent with a new value, and it increments it whenever a GOOSE message is resent without any member value change.

6.3.10 Autoreclose

ACTUAL VALUES ⇨ STATUS ⇨⇩ AUTORECLOSE

■ AUTORECLOSE ■	⇔	**AUTORECLOSE** **SHOT COUNT: 0**	Range: 0, 1, 2, 3, 4

The automatic reclosure shot count is shown here, where the shot count is the number of reclosures that can be attempted before reclosure goes to lockout.

If the status reads "not available," try enabling and configuring the function under **SETTINGS ⇨⇩ CONTROL ELEMENTS ⇨⇩ AUTORECLOSE ⇨⇩ AUTORECLOSE**. If that does not work, the feature is not supported on your device.

6.3.11 Channel tests

ACTUAL VALUES ⇨ STATUS ⇨⇩ CHANNEL TESTS

■ CHANNEL TESTS ■	⇔	CHANNEL 1 STATUS: n/a	Range: n/a, Fail, OK
	⇩	CHANNEL 1 LOST PACKETS: 0	Range: 0 to 65535 in steps of 1. Reset count to 0 through the **COMMANDS ⇨⇩ CLEAR RECORDS** menu.
	⇩	CHANNEL 1 LOCAL LOOPBCK STATUS: n/a	Range: n/a, Fail, OK
	⇩	CHANNEL 1 REMOTE LOOPBCK STATUS: n/a	Range: n/a, Fail, OK
	⇩	CHANNEL 1 LOOP DELAY: 0.0 ms	
	⇩	CHNL 1 ASYMMETRY: 0.000 ms	Range: –10 to 10 ms in steps of 0.1
	⇩	CHANNEL 2 STATUS: n/a	Range: n/a, Fail, OK
	⇩	CHANNEL 2 LOST PACKETS: 0	Range: 0 to 65535 in steps of 1. Reset count to 0 through the **COMMANDS ⇨⇩ CLEAR RECORDS** menu.
	⇩	CHANNEL 2 LOCAL LOOPBCK STATUS: n/a	Range: n/a, Fail, OK
	⇩	CHANNEL 2 REMOTE LOOPBCK STATUS: n/a	Range: n/a, Fail, OK
	⇩	CHANNEL 2 LOOP DELAY: 0.0 ms	
	⇩	CHNL 2 ASYMMETRY: 0.000 ms	Range: –10 to 10 ms in steps of 0.1
	⇩	VALIDITY OF CHANNEL CONFIGURATION: n/a	Range: n/a, Fail, OK
	⇧	PFLL STATUS: n/a	Range: n/a, Fail, OK

The status information for two channels displays in this menu.

CHANNEL 1(2) STATUS — This represents the receiver status of each channel. If the value is "OK," the 87L current differential element is enabled and data is being received from the remote terminal; If the value is "Fail," the 87L element is enabled and data is not being received from the remote terminal. If "n/a," the 87L element is disabled.

CHANNEL 1(2) LOST PACKETS — Current, timing, and control data is transmitted to the remote terminals in data packets at a rate of two packets per cycle. The number of lost packets represents data packets lost in transmission; this count can be reset through the **COMMANDS ⇨⇩ CLEAR RECORDS** menu.

CHANNEL 1(2) LOCAL LOOPBACK STATUS — The result of the local loopback test displays here.

CHANNEL 1(2) REMOTE LOOPBACK STATUS — The result of the remote loopback test displays here.

CHANNEL 1(2) LOOP DELAY — Displays the round trip channel delay (including loopback processing time of the remote relay) computed during a remote loopback test and under normal relay operation, in milliseconds (ms).

CHNL 1(2) ASYMMETRY — The result of channel asymmetry calculations derived from GPS signal displays here for both channels if **CHANNEL ASYMMETRY** is "Enabled". A positive "+" sign indicates that the transit delay in the transmitting direction is less than the delay in the receiving direction; a negative "–" sign indicates that the transit delay in the transmitting direction is more than the delay in the receiving direction. A displayed value of "0.0" indicates that either asymmetry is not present or cannot be estimated due to failure with local/remote GPS clock source.

VALIDITY OF CHANNEL CONFIGURATION — The current state of the communications channel identification check, and hence validity, displays here. If a remote relay ID number does not match the programmed number at the local relay, the "Fail" value displays. The "n/a" value appears if the local relay ID is set to a default value of "0" or if the 87L element is disabled. See the **SETTINGS ⇨⇩ SYSTEM SETUP ⇨⇩ POWER SYSTEM** section for more information

PFLL STATUS — This value represents the status of the phase and frequency locked loop (PFLL) filter that uses timing information from local and remote terminals to synchronize the clocks of all terminals. If **PFLL STATUS** is "OK," the clocks of all terminals are synchronized and 87L protection is enabled. If it is "Fail," the clocks of all terminals are not synchronized and 87L protection is disabled. At startup, the clocks of all terminals are not synchronized and the PFLL status displays as "Fail." It takes up to eight seconds after startup for the value to change from "Fail" to "OK." When the status is "n/a," then PFLL is disabled.

6.3.12 Digital counters

ACTUAL VALUES ⇨ STATUS ⇨⇩ DIGITAL COUNTERS ⇨ DIGITAL COUNTERS Counter 1(8)

■ DIGITAL COUNTERS ■ Counter 1	⇔	Counter 1 ACCUM: 0	
	⇩	Counter 1 FROZEN: 0	
	⇩	Counter 1 FROZEN: 1970/01/01 00:00:00	Range: YYYY/MM/DD HH:MM:SS
	⇧	Counter 1 MICROS: 0	Range: 0 to 4294967295 in steps of 1

The present status of the eight digital counters displays here. The status of each counter, with the user-defined counter name, includes the accumulated and frozen counts (the count units label also appears). Also included, is the date and time stamp for the frozen count. The **COUNTER 1 MICROS** value refers to the microsecond portion of the time stamp.

6.3.13 Selector switches

ACTUAL VALUES ⇨ STATUS ⇨⇩ SELECTOR SWITCHES

■ SELECTOR SWITCHES ■	⇔	SELECTOR SWITCH 1 POSITION: 0/7	Range: Current Position / 7
	⇧	SELECTOR SWITCH 2 POSITION: 0/7	Range: Current Position / 7

The display shows both the current position and the full range. The current position only (an integer from 0 through 7) is the actual value.

6.3.14 Flex states

ACTUAL VALUES ⇨ STATUS ⇨⇩ FLEX STATES

■ FLEX STATES ■	⇔	PARAM 1: Off Off	Range: On, Off
		⇩	
	⇧	PARAM 256: Off Off	Range: On, Off

There are 256 FlexState™ bits available. The second line value indicates the state of the given FlexState bit.

6.3.15 Ethernet

ACTUAL VALUES ⇨ STATUS ⇨⇩ ETHERNET

■ ETHERNET ■	⇔	ETHERNET PRI LINK STATUS: Fail	Range: Fail, OK
	⇩	ETHERNET SEC LINK STATUS: Fail	Range: Fail, OK
	⇧	ETHERNET TER LINK STATUS: Fail	Range: Fail, OK

These values indicate the status of the first, second, and third Ethernet links.

6.3.16 Real time clock synchronizing

ACTUAL VALUES ⇨ STATUS ⇨⇩ REAL TIME CLOCK SYNCHRONIZING

■ REAL TIME CLOCK ■ SYNCHRONIZING	⇔	RTC SYNC SOURCE: None	Range: see below
	⇩	GRANDMASTER ID: 0X0000000000000000	Range: any 8 octet value
	⇩	ACCURACY: 999999999 ns	Range: 0 to 999,999,999 ns
	⇩	PORT 1 PTP STATE: No Signal	Range: Disabled, No Signal, Calibrating, Synch'd (No Pdelay), Synchronized
	⇩	PORT 2 PTP STATE: No Signal	Range: Disabled, No Signal, Calibrating, Synch'd (No Pdelay), Synchronized
	⇩	PORT 3 PTP STATE: No Signal	Range: Disabled, No Signal, Calibrating, Synch'd (No Pdelay), Synchronized
	⇧	PTP - IRIG-B DELTA: 500000000 ns	Range: -500,000,000 to +500,000,000 ns

6

SOFTWARE OPTION

This item displays in the software when the product includes an IEEE 1588 software option.

RTC SYNC SOURCE actual value is the time synchronizing source the relay is using at present. Possible sources are: Port 1 PTP Clock, Port 2 PTP Clock, Port 3 PTP Clock, IRIG-B, Other, and None, where "Other" means any less precise source (SNTP, IEC 103, IEC 104, or DNP). An actual value displays when the relay includes the IEEE 1588 software option.

The **GRANDMASTER ID** is the grandmasterIdentity code being received from the present PTP grandmaster, if any. When the relay is not using any PTP grandmaster, this actual value is zero. The grandmasterIdentity code is specified by PTP to be globally unique, so one can always know which clock is grandmaster in a system with multiple grandmaster-capable clocks.

ACCURACY is the estimated maximum time error at present in the RTC, considering the quality information imbedded in the received time signal. The value 999,999,999 indicates that the magnitude of the estimated error is one second or more, or that the error cannot be estimated.

PORT 1...3 PTP STATE is the present state of the port's PTP clock. The PTP clock state is:

- **Disabled** is the port's function setting is Disabled
- **No Signal** if enabled but no signal from an active master has been found and selected
- **Calibrating** if an active master has been selected but lock is not at present established
- **Synch'd (No Pdelay)** if the port is synchronized, but the peer delay mechanism is non-operational
- **Synchronized** if synchronized

PTP - IRIG-B DELTA is the time difference, measured in nanoseconds, between the fractional seconds portion of the time being received via PTP and that being received via IRIG-B. A positive value indicates that PTP time is fast compared to IRIG-B time.

6.3.17 Remaining connection status

ACTUAL VALUES ⇨ STATUS ⇨⇩ COMM STATUS REMAINING CONNECT

■ COMM STATUS ■ REMAINING CONNECT	⇔	MMS TCP(max 5) 5	Range: 0 to 5
	⇩	MODBUS TCP (max 4) 4	Range: 0 to 4
	⇩	DNP TCP(max 2) 2	Range: 0 to 2
	⇩	IEC-104 TCP(max 2) 2	Range: 0 to 2
	⇩	PMU TCP 1	Range: 1 to 4
	⇧	SFTP (max 4) 4	Range: 0 to 4

These values specify the remaining number of TCP connections still available for each protocol. The display depends on the options applicable to your device. Each time a connection is used, the remaining number of connections decrements. When released, the remaining number of connections increments. If no connection is made over the specific protocol, the number equals the maximum number available for the specific protocol.

For example, the maximum number of Modbus TCP connections is 4. Once an EnerVista session is opened on a computer connected to the UR over Ethernet, the Modbus TCP status shows 3. If the EnerVista application is closed, the Modbus TCP status shows 4.

For the graphical front panel, the remaining connections refer to TCP connections only.

MMS TCP — The number of IEC 61850 connections remaining.

PMU TCP — The maximum number of PMU TCP connections matches the number of aggregators. The maximum number of aggregators for the N60 is 4. The maximum number for the C60 is 2. The maximum number is 1 for other products with a PMU. The remaining number of aggregators displays here.

6.3.18 Parallel Redundancy Protocol (PRP)

The Parallel Redundancy Protocol (PRP) defines a redundancy protocol for high availability in substation automation networks.

ACTUAL VALUES ⇨ STATUS ⇨⇩ PRP STATUS

■ PRP STATUS ■	⇔	Total Rx Port A: 0	Range: 0 to 4G, blank if PRP disabled
	⇩	Total Rx Port B: 0	Range: 0 to 4G, blank if PRP disabled
	⇩	Mismatches Port A: 0	Range: 0 to 4G, blank if PRP disabled
	⇩	Mismatches Port B: 0	Range: 0 to 4G, blank if PRP disabled
	⇧	Total Errors: 0	Range: 0 to 4G, blank if PRP disabled

The L90 is provided with optional PRP capability. This feature is specified as a software option at the time of ordering. See the Order Codes section in chapter 2 for details.

Total Received Port A is a counter for total messages received (either from DANPs or from SANs) on Port A.

Total Received Port B is a counter for total messages received (either from DANPs or from SANs) on Port B.

Total Errors is a counter for total messages received with an error (bad port code, frame length too short).

Mismatches Port A is a counter for total messages received with an error on Port A (PRP frame, but port received through and LAN ID in the frame do not match).

Mismatches Port B is a counter for total messages received with an error on Port B (PRP frame, but port received through and LAN ID in the frame do not match).

6.3.19 TxGOOSE status

ACTUAL VALUES ⇨ STATUS ⇨⇩ TxGOOSE STATUS

■ **TxGOOSE STATUS** ■	⇔	**R-TxGOOSE 1** **ARP: Off**	Range: On, Off
		⇩	
	⇧	**R-TxGOOSE 16** **ARP: Off**	Range: On, Off

The L90 is provided with optional IEC 61850 capability. This feature is specified as a software option at the time of ordering. See the Order Codes section of chapter 2 for details.

This status is relevant to R-GOOSE reception when configured for SSM or ASM reception modes. It is not relevant for GOOSE or for R-GOOSE in unicast reception mode.

ARP — The unicast mode of R-GOOSE transmission requires Address Resolution Protocol (ARP) for the resolution of the network layer address into the MAC layer address. R-TxGOOSE## ARP status On indicates that ARP responses are being received and the destination MAC address for R-GOOSE transmissions has been obtained. This status remains Off if TxGOOSE## is not configured for R-GOOSE. It also remains Off if setting R-TxGOOSE1 DST IP is set to a multicast address. In the case where setting R-TxGOOSE1 DST IP is configured with a unicast address and this status indicates Off, TxGOOSE## transmission will be off, and therefore communication network diagnosis needs to be carried out.

This status is only applicable for R-GOOSE transmission with setting R-TxGOOSE1 DST IP set to a unicast IP address. It is not applicable for GOOSE or for R-GOOSE when setting R-TxGOOSE1 DST IP is multicast.

6.4 Metering

6.4.1 Metering conventions

6.4.1.1 UR convention for measuring power and energy

The figure illustrates the conventions established for use in UR devices.

Figure 6-3: Flow direction of signed values for watts and VARs

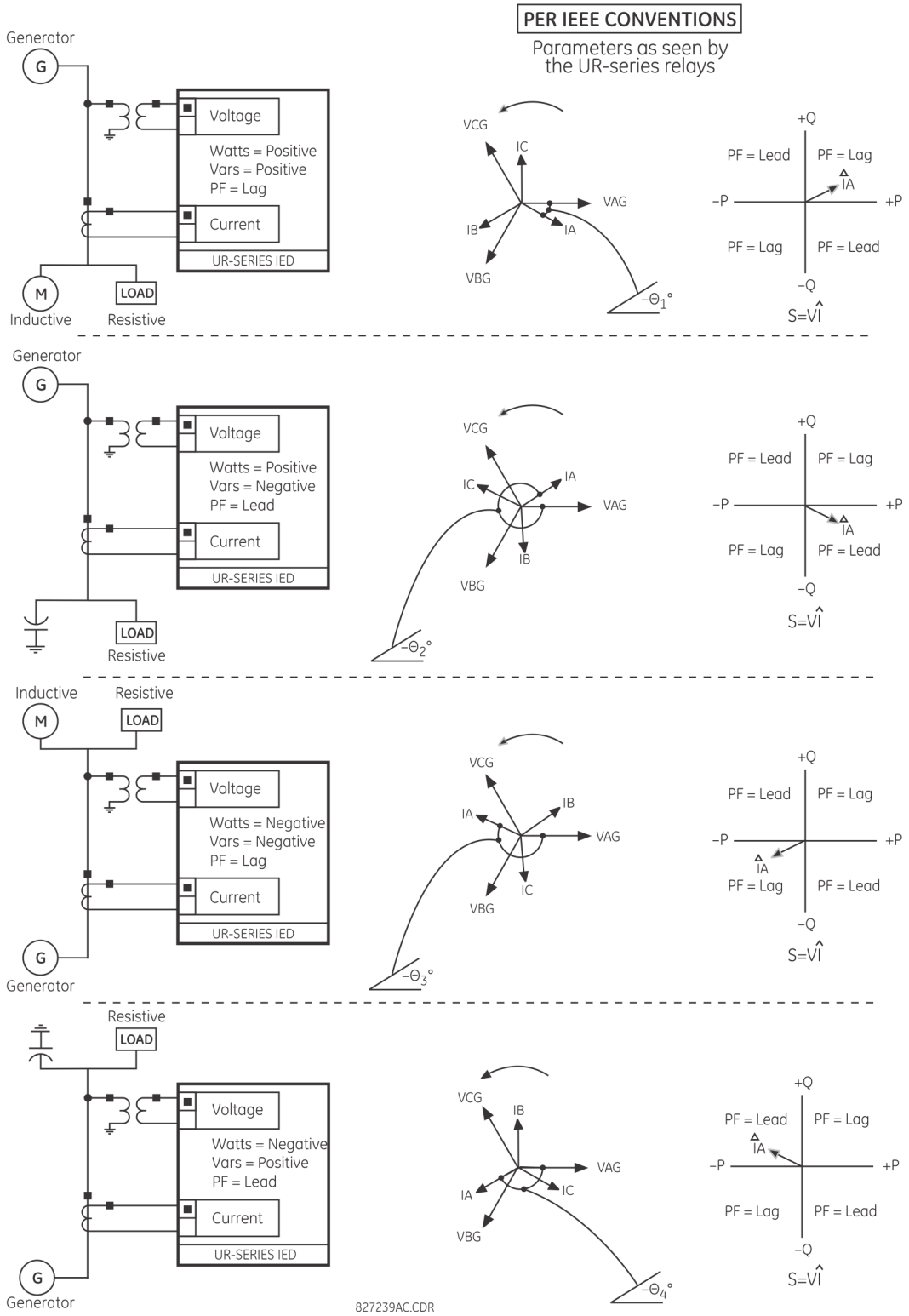

6.4.1.2 UR convention for measuring phase angles

All phasors calculated by URs and used for protection, control and metering functions are rotating phasors that maintain the correct phase angle relationships with each other at all times.

For display and oscillography purposes, all phasor angles in a given relay are referred to an AC input channel pre-selected by the **SETTINGS ⇨⇩ SYSTEM SETUP ⇨⇩ POWER SYSTEM ⇨⇩ FREQUENCY AND PHASE REFERENCE** setting. This setting defines a particular AC signal source to be used as the reference.

The relay first determines if any "Phase VT" bank is indicated in the source. If it is, voltage channel VA of that bank is used as the angle reference. Otherwise, the relay determines if any "Aux VT" bank is indicated; if it is, the auxiliary voltage channel of that bank is used as the angle reference. If neither of the two conditions is satisfied, then two more steps of this hierarchical procedure to determine the reference signal include "Phase CT" bank and "Ground CT" bank.

If the AC signal pre-selected by the relay upon configuration is not measurable, the phase angles are not referenced. The phase angles are assigned as positive in the leading direction, and are presented as negative in the lagging direction, to more closely align with power system metering conventions. The figure illustrates this.

Figure 6-4: UR phase angle measurement convention

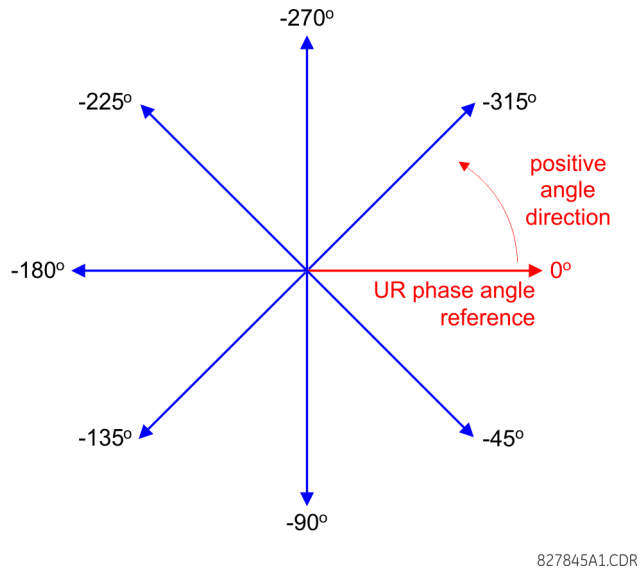

6

6.4.1.3 UR convention for measuring symmetrical components

The URs calculate voltage symmetrical components for the power system phase A line-to-neutral voltage, and symmetrical components of the currents for the power system phase A current. Owing to the above definition, phase angle relations between the symmetrical currents and voltages stay the same irrespective of the connection of instrument transformers. This is important for setting directional protection elements that use symmetrical voltages.

For display and oscillography purposes the phase angles of symmetrical components are referenced to a common reference as described in the previous sub-section.

WYE-connected instrument transformers

- ABC phase rotation:

$$V_0 = \frac{1}{3}(V_{AG} + V_{BG} + V_{CG})$$

$$V_1 = \frac{1}{3}(V_{AG} + aV_{BG} + a^2V_{CG})$$

$$V_2 = \frac{1}{3}(V_{AG} + a^2V_{BG} + aV_{CG})$$

- ACB phase rotation:

$$V_0 = \frac{1}{3}(V_{AG} + V_{BG} + V_{CG})$$

$$V_1 = \frac{1}{3}(V_{AG} + a^2V_{BG} + aV_{CG})$$

$$V_2 = \frac{1}{3}(V_{AG} + aV_{BG} + a^2V_{CG})$$

The above equations apply to currents as well.

DELTA-connected instrument transformers

- ABC phase rotation:

$$V_0 = N/A$$
$$V_1 = \frac{1\angle -30°}{3\sqrt{3}}(V_{AB} + aV_{BC} + a^2V_{CA})$$
$$V_2 = \frac{1\angle 30°}{3\sqrt{3}}(V_{AB} + a^2V_{BC} + aV_{CA})$$

- ACB phase rotation:

$$V_0 = N/A$$
$$V_1 = \frac{1\angle 30°}{3\sqrt{3}}(V_{AB} + a^2V_{BC} + aV_{CA})$$
$$V_2 = \frac{1\angle -30°}{3\sqrt{3}}(V_{AB} + aV_{BC} + a^2V_{CA})$$

The zero-sequence voltage is not measurable under the Delta connection of instrument transformers and is defaulted to zero. The table below shows an example of symmetrical components calculations for the ABC phase rotation.

Table 6-1: Symmetrical components calculation example

SYSTEM VOLTAGES, sec. V *						VT conn.	relay INPUTS, sec. V			SYMM. COMP, sec. V		
V_{AG}	V_{BG}	V_{CG}	V_{AB}	V_{BC}	V_{CA}		F5ac	F6ac	F7ac	V_0	V_1	V_2
13.9 ∠0°	76.2 ∠−125°	79.7 ∠−250°	84.9 ∠−313°	138.3 ∠−97°	85.4 ∠−241°	WYE	13.9 ∠0°	76.2 ∠−125°	79.7 ∠−250°	19.5 ∠−192°	56.5 ∠−7°	23.3 ∠−187°
UNKNOWN (only V_1 and V_2 can be determined)			84.9 ∠0°	138.3 ∠−144°	85.4 ∠−288°	DELTA	84.9 ∠0°	138.3 ∠−144°	85.4 ∠−288°	N/A	56.5 ∠−54°	23.3 ∠−234°

* The power system voltages are phase-referenced – for simplicity – to V_{AG} and V_{AB}, respectively. This, however, is a relative matter. It is important to remember that the L90 displays are always referenced as specified under **SETTINGS ⇨⇩ SYSTEM SETUP ⇨⇩ POWER SYSTEM ⇨⇩ FREQUENCY AND PHASE REFERENCE**.

The example above is illustrated in the following figure.

Figure 6-5: Measurement convention for symmetrical components

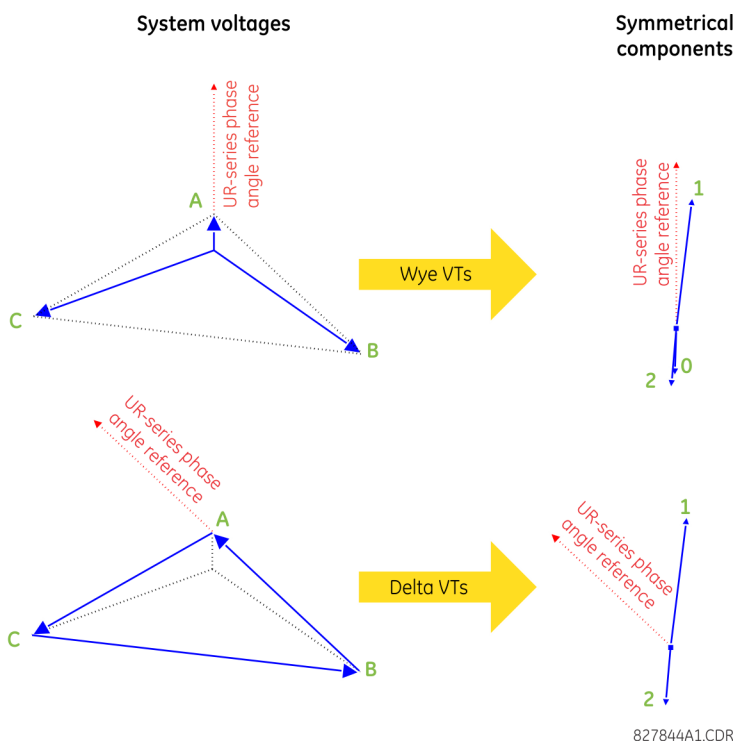

6.4.2 Differential current

ACTUAL VALUES ⇨⇩ METERING ⇨ 87L DIFFERENTIAL CURRENT

■ 87L DIFFERENTIAL ■ CURRENT	⇔	LOCAL IA: 0.000 A 0.0°
	⇕	LOCAL IB: 0.000 A 0.0°
	⇕	LOCAL IC: 0.000 A 0.0°
	⇕	TERMINAL 1 IA: 0.000 A 0.0°
	⇕	TERMINAL 1 IB: 0.000 A 0.0°
	⇕	TERMINAL 1 IC: 0.000 A 0.0°
	⇕	TERMINAL 2 IA: 0.000 A 0.0°
	⇕	TERMINAL 2 IB: 0.000 A 0.0°
	⇕	TERMINAL 2 IC: 0.000 A 0.0°
	⇕	IA DIFF. CURRENT: 0.000 A 0.0°
	⇕	IA RESTR. CURRENT: 0.000 A
	⇕	IB DIFF. CURRENT: 0.000 A 0.0°
	⇕	IB RESTR. CURRENT: 0.000 A
	⇕	IC DIFF. CURRENT: 0.000 A 0.0°
	⇕	IC RESTR. CURRENT: 0.000 A
	⇕	IG DIFF. CURRENT: 0.000 A 0.0°
	⇧	IG RESTR. CURRENT: 0.000 A

The metered current values display for all line terminals in fundamental phasor form. All angles are shown with respect to the reference common for all L90 devices; that is, frequency, source currents, and voltages. The metered primary differential and restraint currents display for the local relay.

Terminal 1 refers to the communication channel 1 interface to a remote L90 at terminal 1. Terminal 2 refers to the communication channel 2 interface to a remote L90 at terminal 2.

6.4.3 Sources

6.4.3.1 Menu

ACTUAL VALUES ⇨⇩ METERING ⇨⇩ SOURCE SRC 1

■ SOURCE SRC 1 ■	⇔	■ PHASE CURRENT ■ SRC 1	See below
	⇩	■ GROUND CURRENT ■ SRC 1	See page 6-18
	⇩	■ PHASE VOLTAGE ■ SRC 1	See page 6-18
	⇩	■ AUXILIARY VOLTAGE ■ SRC 1	See page 6-19
	⇩	■ POWER ■ SRC 1	See page 6-19
	⇩	■ ENERGY ■ SRC 1	See page 6-20
	⇩	■ DEMAND ■ SRC 1	See page 6-20
	⇩	■ FREQUENCY ■ SRC 1	See page 6-21
	⇩	■ CURRENT HARMONICS ■ SRC 1	See page 6-22
	⇧	■ VOLTAGE HARMONICS ■ SRC 1	See page 6-22

This menu displays the metered values available for each source.

Metered values presented for each source depend on the phase and auxiliary VTs and phase and ground CTs assignments for this particular source. For example, if no phase VT is assigned to this source, then any voltage, energy, and power values are unavailable.

6

6.4.3.2 Phase current metering

ACTUAL VALUES ⇨⇩ METERING ⇨ SOURCE SRC 1 ⇨ PHASE CURRENT

■ PHASE CURRENT ■ SRC 1	⇔	SRC 1 RMS Ia: 0.000 b: 0.000 c: 0.000 kA
	⇩	SRC 1 RMS Ia: 0.000 kA
	⇩	SRC 1 RMS Ib: 0.000 kA
	⇩	SRC 1 RMS Ic: 0.000 kA
	⇩	SRC 1 RMS In: 0.000 kA
	⇩	SRC 1 PHASOR Ia: 0.000 kA 0.0°
	⇩	SRC 1 PHASOR Ib: 0.000 kA 0.0°
	⇩	SRC 1 PHASOR Ic: 0.000 kA 0.0°

```
⇕  SRC 1  PHASOR In:
   0.000 kA        0.0°

⇕  SRC 1  ZERO SEQ I0:
   0.000 kA        0.0°

⇕  SRC 1  POS SEQ I1:
   0.000 kA        0.0°

⇧  SRC 1  NEG SEQ I2:
   0.000 kA        0.0°
```

The metered phase current values are displayed in this menu. The "SRC 1" text gets replaced by whatever name was programmed by the user for the associated source (see **SETTINGS ⇨⇩ SYSTEM SETUP ⇨⇩ SIGNAL SOURCES**).

6.4.3.3 Ground current metering

ACTUAL VALUES ⇨⇩ METERING ⇨ SOURCE SRC 1 ⇨ GROUND CURRENT

```
■ GROUND CURRENT
■ SRC 1

⇔  SRC 1  RMS Ig:
   0.000  A

⇕  SRC 1  PHASOR Ig:
   0.000  A      0.0°

⇧  SRC 1  PHASOR Igd:
   0.000  A      0.0°
```

The metered ground current values are displayed in this menu. The "SRC 1" text is replaced by the name programmed by the user for the associated source (see **SETTINGS ⇨⇩ SYSTEM SETUP ⇨⇩ SIGNAL SOURCES**).

6.4.3.4 Phase voltage metering

ACTUAL VALUES ⇨⇩ METERING ⇨ SOURCE SRC 1 ⇨ PHASE VOLTAGE

```
■ PHASE VOLTAGE
■ SRC 1

⇔  SRC 1  RMS Vag:
   0.00  V

⇕  SRC 1  RMS Vbg:
   0.00  V

⇕  SRC 1  RMS Vcg:
   0.00  V

⇕  SRC 1  PHASOR Vag:
   0.000  V      0.0°

⇕  SRC 1  PHASOR Vbg:
   0.000  V      0.0°

⇕  SRC 1  PHASOR Vcg:
   0.000  V      0.0°

⇕  SRC 1  RMS Vab:
   0.00  V

⇕  SRC 1  RMS Vbc:
   0.00  V

⇕  SRC 1  RMS Vca:
   0.00  V

⇕  SRC 1  PHASOR Vab:
   0.000  V      0.0°

⇕  SRC 1  PHASOR Vbc:
   0.000  V      0.0°
```

6

```
⇕  SRC 1  PHASOR Vca:
    0.000  V      0.0°

⇕  SRC 1  ZERO SEQ V0:
    0.000  V      0.0°

⇕  SRC 1  POS SEQ V1:
    0.000  V      0.0°

⇧  SRC 1  NEG SEQ V2:
    0.000  V      0.0°
```

The metered phase voltage values are displayed in this menu. The "SRC 1" text is replaced by the name programmed by the user for the associated source (see **SETTINGS ⇨⇩ SYSTEM SETUP ⇨⇩ SIGNAL SOURCES**).

6.4.3.5 Auxiliary voltage metering

ACTUAL VALUES ⇨⇩ METERING ⇨ SOURCE SRC 1 ⇨⇩ AUXILIARY VOLTAGE

```
■ AUXILIARY VOLTAGE
■ SRC 1

⇔  SRC 1  RMS Vx:
    0.00  V

⇧  SRC 1  PHASOR Vx:
    0.000  V      0.0°
```

The metered auxiliary voltage values are displayed in this menu. The "SRC 1" text is replaced by the name programmed by the user for the associated source (see **SETTINGS ⇨⇩ SYSTEM SETUP ⇨⇩ SIGNAL SOURCES**).

6.4.3.6 Power metering

ACTUAL VALUES ⇨⇩ METERING ⇨ SOURCE SRC 1 ⇨⇩ POWER

```
■ POWER
■ SRC 1

⇔  SRC 1  REAL POWER
    3ϕ:  0.000 kW

⇕  SRC 1  REAL POWER
    ϕa:  0.000 kW

⇕  SRC 1  REAL POWER
    ϕb:  0.000 kW

⇕  SRC 1  REAL POWER
    ϕc:  0.000 kW

⇕  SRC 1  REACTIVE PWR
    3ϕ:  0.000 kvar

⇕  SRC 1  REACTIVE PWR
    ϕa:  0.000 kvar

⇕  SRC 1  REACTIVE PWR
    ϕb:  0.000 kvar

⇕  SRC 1  REACTIVE PWR
    ϕc:  0.000 kvar

⇕  SRC 1  APPARENT PWR
    3ϕ:  0.000 kVA

⇕  SRC 1  APPARENT PWR
    ϕa:  0.000 kVA

⇕  SRC 1  APPARENT PWR
    ϕb:  0.000 kVA

⇕  SRC 1  APPARENT PWR
    ϕc:  0.000 kVA
```

```
⇕  SRC 1  POWER FACTOR
   3ϕ:     1.000

⇕  SRC 1  POWER FACTOR
   ϕa:     1.000

⇕  SRC 1  POWER FACTOR
   ϕb:     1.000

⇧  SRC 1  POWER FACTOR
   ϕc:     1.000
```

This menu displays metered values for real, reactive, and apparent power, as well as power factor. The "SRC 1" text is replaced by the name programmed by the user for the associated source (see **SETTINGS ⇨⇩ SYSTEM SETUP ⇨⇩ SIGNAL SOURCES**).

When VTs are configured in wye, the L90 calculates power in each phase and three-phase power is measured as

$$S = V_A \times \hat{I}_A + V_B \times \hat{I}_B + V_C \times \hat{I}_C \qquad \textbf{Eq. 6-1}$$

When VTs are configured in delta, the L90 does not calculate power in each phase and three-phase power is measured as

$$S = V_{AB} \times \hat{I}_A + V_{CB} \times \hat{I}_C \qquad \textbf{Eq. 6-2}$$

where

S is the apparent power

V_A, V_B, V_C, I_A, I_B, I_C are phase voltage and phase current phasors

V_{AB} and V_{CB} are phase-to-phase voltage phasors

$\hat{I}$ is the conjugate of I

6.4.3.7 Energy metering

ACTUAL VALUES ⇨⇩ METERING ⇨ SOURCE SRC 1 ⇨⇩ ENERGY

```
■ ENERGY
■ SRC 1

⇔  SRC 1  POS WATTHOUR:
   0.000  Wh

⇕  SRC 1  NEG WATTHOUR:
   0.000  Wh

⇕  SRC 1  POS VARHOUR:
   0.000  varh

⇧  SRC 1  NEG VARHOUR:
   0.000  mvarh
```

This menu displays metered values for real and reactive energy. The "SRC 1" text is replaced by the name programmed by the user for the associated source (see **SETTINGS ⇨⇩ SYSTEM SETUP ⇨⇩ SIGNAL SOURCES**). Because energy values are accumulated, record them and then reset them immediately prior to changing CT or VT characteristics.

6.4.3.8 Demand metering

ACTUAL VALUES ⇨⇩ METERING ⇨ SOURCE SRC 1 ⇨⇩ DEMAND

```
■ DEMAND
■ SRC 1

⇔  SRC 1  DMD IA:
   0.000  kA

⇕  SRC 1  DMD IA MAX:
   0.000  kA

⇕  SRC 1  DMD IA DATE:
   2020/07/31 16:30:07

⇕  SRC 1  DMD IB:
   0.000  kA
```

```
⇕ SRC 1  DMD IB MAX:
   0.000  kA

⇕ SRC 1  DMD IB DATE:
  2020/07/31 16:30:07

⇕ SRC 1  DMD IC:
   0.000  kA

⇕ SRC 1  DMD IC MAX:
   0.000  kA

⇕ SRC 1  DMD IC DATE:
  2020/07/31 16:30:07

⇕ SRC 1  DMD W:
   0.000  kW

⇕ SRC 1  DMD W MAX:
   0.000  kW

⇕ SRC 1  DMD W DATE:
  2020/07/31 16:30:07

⇕ SRC 1  DMD VAR:
   0.000  kvar

⇕ SRC 1  DMD VAR MAX:
   0.000  kvar

⇕ SRC 1  DMD VAR DATE:
  2020/07/31 16:30:07

⇕ SRC 1  DMD VA:
   0.000  kVA

⇕ SRC 1  DMD VA MAX:
   0.000  kVA

⇧ SRC 1  DMD VA DATE:
  2020/07/31 16:30:07
```

This menu displays metered values for current and power demand. The "SRC 1" text is replaced by the name programmed by the user for the associated source (see **SETTINGS ⇨⇩ SYSTEM SETUP ⇨⇩ SIGNAL SOURCES**).

The relay measures (absolute values only) the source demand on each phase and average three phase demand for real, reactive, and apparent power. These parameters can be monitored to reduce supplier demand penalties or for statistical metering purposes. Demand calculations are based on the measurement type selected in the **SETTINGS ⇨ PRODUCT SETUP ⇨⇩ DEMAND** menu. For each quantity, the relay displays the demand over the most recent demand time interval, the maximum demand since the last maximum demand reset, and the time and date stamp of this maximum demand value. Maximum demand quantities can be reset to zero with the **CLEAR RECORDS ⇨⇩ CLEAR DEMAND RECORDS** command.

6.4.3.9 Frequency metering

ACTUAL VALUES ⇨⇩ METERING ⇨ SOURCE SRC 1 ⇨⇩ FREQUENCY

```
■ FREQUENCY
■ SRC 1
```

⇔

```
SRC 1  FREQUENCY:
 0.000 Hz
```

The metered frequency values are displayed in this menu. The "SRC 1" text is replaced by the name programmed by the user for the associated source (see **SETTINGS ⇨⇩ SYSTEM SETUP ⇨⇩ SIGNAL SOURCES**).

SOURCE FREQUENCY is measured via software-implemented zero-crossing detection of an AC signal. The signal is either a Clarke transformation of three-phase voltages or currents, auxiliary voltage, or ground current as per source configuration (see the **SYSTEM SETUP ⇨⇩ POWER SYSTEM** settings). The signal used for frequency estimation is low-pass filtered. The final frequency measurement is passed through a validation filter that eliminates false readings due to signal distortions and transients.

If the 87L function is enabled, then dedicated 87L frequency tracking is engaged. In this case, the relay uses the **METERING ⇨⇩ TRACKING FREQUENCY ⇨ TRACKING FREQUENCY** value for all computations, overriding the **SOURCE FREQUENCY** value.

6.4.3.10 Current harmonics and THD metering

ACTUAL VALUES ⇨⇩ METERING ⇨ SOURCE SRC 1 ⇨⇩ CURRENT HARMONICS

```
■ CURRENT HARMONICS
■ SRC 1
```

⇔

```
SRC 1  THD Ia:  0.0
Ib:  0.0 Ic:  0.0%
```

⇕

```
SRC 1  2ND Ia:  0.0
Ib:  0.0 Ic:  0.0%
```

⇕

```
SRC 1  3RD Ia:  0.0
Ib:  0.0 Ic:  0.0%
```

⇩

⇧

```
SRC 1  25TH Ia:  0.0
Ib:  0.0 Ic:  0.0%
```

This menu displays metered current harmonics values. The "SRC 1" text is replaced by the name was programmed for the associated source (see **SETTINGS ⇨⇩ SYSTEM SETUP ⇨⇩ SIGNAL SOURCES**). Current harmonics are measured for each source for the total harmonic distortion (THD) and 2nd to 25th harmonics per phase.

6.4.3.11 Voltage harmonics and THD metering

ACTUAL VALUES ⇨⇩ METERING ⇨ SOURCE SRC 1 ⇨⇩ VOLTAGE HARMONICS

```
■ VOLTAGE HARMONICS
■ SRC 1
```

⇔

```
SRC 1  THD Va:  0.0
Vb:  0.0 Vc:  0.0%
```

⇕

```
SRC 1  2ND Va:  0.0
Vb:  0.0 Vc:  0.0%
```

⇕

```
SRC 1  3RD Va:  0.0
Vb:  0.0 Vc:  0.0%
```

⇩

⇧

```
SRC 1  25TH Va:  0.0
Vb:  0.0 Vc:  0.0%
```

This menu displays metered voltage harmonics values. The "SRC 1" text is replaced by the programmed name for the associated source (see the **SETTINGS ⇨⇩ SYSTEM SETUP ⇨⇩ SIGNAL SOURCES** menu).

To extract the 2nd to 25th voltage harmonics, each harmonic is computed on a per-phase basis, where:

N = 64 is the number of samples per cycle
$\omega_0 = 2\pi f$ is the angular frequency based on the system frequency (50 or 60 Hz)
k = 1, 2,..., N – 1 is the index over one cycle for the Fast Fourier Transform (FFT)
m is the last sample number for the sliding window
h = 1, 2,..., 25 is the harmonic number

The short-time Fourier transform is applied to the unfiltered signal:

$$F_{real}(m,h) = \frac{2}{N}\sum_k (f(m-k)\cdot\cos(h\cdot\omega_0\cdot t(k)))$$

$$F_{imag}(m,h) = \frac{2}{N}\sum_k (f(m-k)\cdot\sin(h\cdot\omega_0\cdot t(k)))$$

$$F_{ampl}(m,h) = \sqrt{F_{real}(m,h)^2 + F_{imag}(m,h)^2} \qquad \textbf{Eq. 6-3}$$

The harmonics are a percentage of the fundamental signal obtained as a ratio of harmonic amplitude to fundamental amplitude multiplied by 100%. The total harmonic distortion (THD) is the ratio of the total harmonic content to the fundamental:

$$THD = \sqrt{F_2^2 + F_3^2 + \ldots + F_{25}^2} \qquad \textbf{Eq. 6-4}$$

NOTE

Voltage harmonics are calculated only for Wye connected phase VTs. Ensure that the **SYSTEM SETUP ⇨ AC INPUTS ⇨⇩ VOLTAGE BANK F5 ⇨⇩ PHASE VT XX CONNECTION** setting is "Wye" to enable voltage harmonics metering.

6.4.4 Sensitive directional power

ACTUAL VALUES ⇨⇩ METERING ⇨⇩ SENSITIVE DIRECTIONAL POWER ⇨ DIRECTIONAL POWER 1(2)

■ DIRECTIONAL ■ POWER 1	⇔	DIRECTIONAL POWER 1 3Φ: 0.000 W

The effective operating quantities of the sensitive directional power elements display here. The display is useful to calibrate the feature by compensating the angular errors of the CTs and VTs with the use of the **RCA** and **CALIBRATION** settings.

6.4.5 Synchrocheck

ACTUAL VALUES ⇨⇩ METERING ⇨ SYNCHROCHECK ⇨⇩ SYNCHROCHECK 1(10)

■ SYNCHROCHECK 1 ■	⇔	SYNCHROCHECK 1 DELTA VOLT: 0.000 kV
	⇩	SYNCHROCHECK 1 DELTA FREQ: 0.00 Hz
	⇩	SYNCHROCHECK 1 DELTA PHASE: 0.0°
	⇩	SYNCHROCHECK 1 SYNSCP D_PH: 0.0°
	⇩	SYNCHROCHECK 1 V1 MAG: 0.000 kv
	⇩	SYNCHROCHECK 1 V1 ANG: 0.0°
	⇩	SYNCHROCHECK 1 V2 MAG: 0.000 kV
	⇩	SYNCHROCHECK 1 V2 ANG: 0.0°
	⇩	SYNCHROCHECK 1 PROJ V2 MAG: 0.000 kV
	⇩	SYNCHROCHECK 1 PROJ V2 ANG: 0.0°
	⇩	SYNCHROCHECK 1 PROJ DELTA_PHASE: 0.0°
	⇧	SYNCHROCHECK 1 PROJ SYNSCP D_PH: 0.0°

If synchrocheck or a setting is "Disabled," the corresponding actual values menu item does not display.

6.4.6 Tracking frequency

ACTUAL VALUES ⇨⇩ METERING ⇨⇩ TRACKING FREQUENCY

■ TRACKING FREQUENCY ■	⇔	TRACKING FREQUENCY: 60.00 Hz

The tracking frequency displays here. The frequency is tracked based on configuration of the reference source. The **TRACKING FREQUENCY** is based on positive sequence current phasors from all line terminals and is synchronously adjusted at all terminals. If currents are below 0.125 pu, then the **NOMINAL FREQUENCY** is used.

6.4.7 Frequency rate of change

ACTUAL VALUES ⇨⇩ METERING ⇨⇩ FREQUENCY RATE OF CHANGE 1(4)

■ FREQUENCY RATE ■ OF CHANGE 1	⇔	FREQUENCY RATE OF CHANGE1: 0.00 Hz/s

The metered frequency rate of change for the frequency rate of change elements is shown here.

6.4.8 FlexElements

ACTUAL VALUES ⇨⇩ METERING ⇨⇩ FLEXELEMENTS ⇨ FLEXELEMENT 1(8)

■ FLEXELEMENT 1 ■	⇔	FLEXELEMENT 1 OpSig: 0.000

The operating signals for the FlexElements are displayed in pu values using the following definitions of the base units.

Table 6-2: FlexElement base units

Base unit	Description
87L SIGNALS (Local IA Mag, IB, and IC) (Diff Curr IA Mag, IB, and IC) (Terminal 1 IA Mag, IB, and IC) (Terminal 2 IA Mag, IB and IC)	I_{BASE} = maximum primary RMS value of the +IN and –IN inputs (CT primary for source currents, and 87L source primary current for line differential currents)
87L SIGNALS (Op Square Curr IA, IB, and IC) (Rest Square Curr IA, IB, and IC)	BASE = Squared CT secondary of the 87L source
BREAKER ACC ARCING AMPS (Brk X Acc Arc Amp A, B, and C)	BASE = 2000 $kA^2 \times$ cycle
BREAKER ARCING AMPS (Brk X Arc Amp A, B, and C)	BASE = 1 $kA^2 \times$ cycle
DCmA	BASE = maximum value of the **DCMA INPUT MAX** setting for the two transducers configured under the +IN and –IN inputs.
FAULT LOCATION	BASE = Line Length as specified in Fault Report
FREQUENCY	f_{BASE} = 1 Hz
FREQUENCY RATE OF CHANGE	df/dt_{BASE} = 1 Hz/s
PHASE ANGLE	φ_{BASE} = 360 degrees (see the UR angle referencing convention)
POWER FACTOR	PF_{BASE} = 1.00
RTDs	BASE = 100°C
SENSITIVE DIR POWER (Sns Dir Power)	P_{BASE} = maximum value of $3 \times V_{BASE} \times I_{BASE}$ for the +IN and –IN inputs of the sources configured for the sensitive power directional element(s).
SOURCE CURRENT	I_{BASE} = maximum nominal primary RMS value of the +IN and –IN inputs
SOURCE ENERGY (Positive and Negative Watthours, Positive and Negative Varhours)	E_{BASE} = 10000 MWh or MVAh, respectively
SOURCE POWER	P_{BASE} = maximum value of $V_{BASE} \times I_{BASE}$ for the +IN and –IN inputs

Base unit	Description
SOURCE THD & HARMONICS	BASE = 1%
SOURCE VOLTAGE	V_{BASE} = maximum nominal primary RMS value of the +IN and –IN inputs
SYNCHROCHECK (Max Delta Volts)	V_{BASE} = maximum primary RMS value of all the sources related to the +IN and –IN inputs
VOLTS PER HERTZ	BASE = 1.00 pu
Z_{BASE}	Z_{BASE} = PhaseVTSecondary / PhaseCTSecondary, where PhaseVTSecondary and PhaseCTSecondary are the secondary nominal voltage and the secondary nominal current of the distance source. In case multiple CT inputs are summed as one source current and mapped as the distance source, use the PhaseCTSecondary value from the CT with the highest primary nominal current. Distance source is specified in setting under **SETTINGS ⇨⇩ GROUPED ELEMENTS ⇨⇩ SETTING GROUP 1(6) ⇨ DISTANCE**. PhaseVTSecondary and PhaseCTSecondary are specified in setting under **SETTINGS ⇨⇩ SYSTEM SETUP ⇨ AC INPUTS**.

6.4.9 RxGOOSE analogs

ACTUAL VALUES ⇨⇩ METERING ⇨⇩ RxGOOSE Analogs

```
■ RxGOOSE
■ Analogs
```

⇔

```
RxGOOSE Analog 1
0.000
```

⇩

⇧

```
RxGOOSE Analog 32
0.000
```

SOFTWARE OPTION

The L90 is provided with optional GOOSE communications capability. This feature is specified as a software option at the time of ordering. See the Order Codes section of chapter 2 for details.

The RxGOOSE Analog values display in this menu. The RxGOOSE Analog values are received via IEC 61850 GOOSE messages sent from other devices.

6.4.10 Wattmetric ground fault

ACTUAL VALUES ⇨⇩ METERING ⇨⇩ WATTMETRIC GROUND FAULT 1(2)

```
■ WATTMETRIC
■ GROUND FAULT 1
```

⇔

```
WATT GND FLT 1:
  0.000  W
```

This menu displays the wattmetric zero-sequence directional element operating power values.

6.4.11 Phasor Measurement Unit

ACTUAL VALUES ⇨⇩ METERING ⇨⇩ PHASOR MEASURMENT UNIT ⇨⇩ PMU 1

```
■ PMU 1
■
```

⇔

```
PMU 1 VA:
 0.000 V          0.00°
```

Range: Va or Vab per VT bank connection

⇩

```
PMU 1 VB:
 0.000 V          0.00°
```

Range: Va or Vab per VT bank connection

⇩

```
PMU 1 VC:
 0.000 V          0.00°
```

Range: Va or Vab per VT bank connection

⇩

```
PMU 1 VX:
 0.000 V          0.00°
```

⇩

```
PMU 1 V1:
 0.000 V          0.00°
```

```
⇕ PMU 1 V2:
  0.000 V          0.00°

⇕ PMU 1 V0:
  0.000 V          0.00°

⇕ PMU 1 IA:
  0.000 A          0.00°

⇕ PMU 1 IB:
  0.000 A          0.00°

⇕ PMU 1 IC:
  0.000 A          0.00°

⇕ PMU 1 IG:
  0.000 A          0.00°

⇕ PMU 1 I1:
  0.000 A          0.00°

⇕ PMU 1 I2:
  0.000 A          0.00°

⇕ PMU 1 I0:
  0.000 A          0.00°

⇕ PMU 1 FREQUENCY:
  0.000 Hz

⇕ PMU 1 df/dt:
  0.00 Hz/s

⇧ PMU 1 CONFIG CHANGE
  COUNTER:         0
```

Range: Substituted with zero if delta-connected VTs

Range: 0 to 65535

These actual values display without the corresponding time stamp as they become available per the recording rate setting. Also, the recording post-filtering setting is applied to these values.

6

6.4.12 PMU aggregator

ACTUAL VALUES ⇨⇩ METERING ⇨⇩ PHASOR MEASURMENT UNIT ⇨⇩ PMU AGGREGATOR 1

```
■ PMU AGGREGATOR 1
■
```

⇔

```
PMU AGGREGATOR 1
PDU SIZE: 0
```

Actual values for the IEC 61850-90-5 PDU size are provided. These values allow you to know the approximate Ethernet frame size for the data streams from each aggregator. This can help to estimate network loading. The PDU size shown in the displays does not include the Ethernet, UDP, or IP layers. PDU sizes approaching approximately 1500 bytes result in fragmented data frames, causing increased network traffic.

6.4.13 Volts per hertz

ACTUAL VALUES ⇨⇩ METERING ⇨⇩ VOLTS PER HERTZ 1(2)

```
■ VOLTS PER HERTZ 1
■
```

⇔

```
VOLTS PER HERTZ 1:
0.000 pu
```

This menu displays the data for volts per hertz.

6.4.14 Restricted ground fault

ACTUAL VALUES ⇨⇩ METERING ⇨⇩ RESTRICTED GROUND FAULT CURRENTS ⇨ RESTRICTED GROUND FAULT 1(4)

■ RESTRICTED ■ GROUND FAULT 1	⇔	RGF 1 DIFF Igd: 0.000 A
	⇧	RGF 1 RESTR Igr: 0.000 A

This menu displays the differential and restraint current values for the restricted ground fault element.

6.4.15 Transducer inputs and outputs

ACTUAL VALUES ⇨⇩ METERING ⇨⇩ TRANSDUCER I/O DCMA INPUTS ⇨ DCMA INPUT xx

■ DCMA INPUT xx ■	⇔	DCMA INPUT xx 0.000 mA

Actual values for each DCmA input channel that is enabled are displayed with the top line as the programmed channel ID and the bottom line as the value followed by the programmed units.

ACTUAL VALUES ⇨⇩ METERING ⇨⇩ TRANSDUCER I/O RTD INPUTS ⇨ RTD INPUT xx

■ RTD INPUT xx ■	⇔	RTD INPUT xx -50 °C

Actual values for each RTD input channel that is enabled are displayed with the top line as the programmed channel ID and the bottom line as the value.

6.4.16 Distance

ACTUAL VALUES ⇨⇩ METERING ⇨⇩ DISTANCE

■ DISTANCE ■	⇔	AB LOOP RESISTANCE RAB: 0.00 Ohms
	⇩	AB LOOP REACTANCE XAB: 0.00 Ohms
	⇩	AB LOOP IMPEDANCE ZAB: 0.00 Ohms
	⇩	AB LOOP IMPEDANCE ANGLE: 0.00 DEG
	⇩	BC LOOP RESISTANCE RBC: 0.00 Ohms
	⇩	BC LOOP REACTANCE XBC: 0.00 Ohms
	⇩	BC LOOP IMPEDANCE ZBC: 0.00 Ohms
	⇩	BC LOOP IMPEDANCE ANGLE: 0.00 DEG
	⇩	CA LOOP RESISTANCE RCA: 0.00 Ohms
	⇩	CA LOOP REACTANCE XCA: 0.00 Ohms
	⇩	CA LOOP IMPEDANCE ZCA: 0.00 Ohms

⇕ **CA LOOP IMPEDANCE ANGLE: 0.00 DEG**

⇕ **AG LOOP RESISTANCE RAG: 0.00 Ohms**

⇕ **AG LOOP REACTANCE XAG: 0.00 Ohms**

⇕ **AG LOOP IMPEDANCE ZAG: 0.00 Ohms**

⇕ **AG LOOP IMPEDANCE ANGLE: 0.00 DEG**

⇕ **BG LOOP RESISTANCE RBG: 0.00 Ohms**

⇕ **BG LOOP REACTANCE XBG: 0.00 Ohms**

⇕ **BG LOOP IMPEDANCE ZBG: 0.00 Ohms**

⇕ **BG LOOP IMPEDANCE ANGLE: 0.00 DEG**

⇕ **CG LOOP RESISTANCE RCG: 0.00 Ohms**

⇕ **CG LOOP REACTANCE XCG: 0.00 Ohms**

⇕ **CG LOOP IMPEDANCE ZCG: 0.00 Ohms**

⇑ **CG LOOP IMPEDANCE ANGLE: 0.00 DEG**

Loop impedance is defined as Z##=|Z##| Angle=R##+jX##, in secondary ohms and ## is the loop indication (AB, BC, CA, AG, BG, and CG respectively).

They are calculated as

$$ZAB = \frac{VA - VB}{IA - IB} \qquad ZBC = \frac{VB - VC}{IB - IC} \qquad ZCA = \frac{VC - VA}{IC - IA}$$ **Eq. 6-5**

per the following equations.

$$ZAG = \frac{VA}{IA + \left(\frac{Z0}{Z1} - 1\right) \times I0 + \frac{1}{3} \times \frac{Z0M}{Z1} \times IG} \qquad ZBG = \frac{VB}{IB + \left(\frac{Z0}{Z1} - 1\right) \times I0 + \frac{1}{3} \times \frac{Z0M}{Z1} \times IG} \qquad ZCG = \frac{VC}{IC + \left(\frac{Z0}{Z1} - 1\right) \times I0 + \frac{1}{3} \times \frac{Z0M}{Z1} \times IG}$$ **Eq. 6-6**

where

VA, VB, VC are phase voltage phasors in secondary volts
IA, IB, IC are current phasors in secondary amps
I0 is the zero sequence current phasors in secondary amps
IG is the ground current from the parallel line scaled to the source phase CT in secondary amps
Z0/Z1 is the zero sequence impedance to positive sequence impedance ratio
Z0M/Z1 is mutual zero sequence impedance to positive sequence impedance ratio, both are settings taken from the first enabled ground distance zone (count from zone 1 to zone 5)

ZAG, ZBG, ZCG are calculated only if at least one ground distance zone is enabled; otherwise all the metering quantities for ground distance impedance (ZAG, ZBG, and ZCG) are reset to zero, including magnitude and angle. Note that VTs of the distance source must be connected in Wye if the ground distance element is enabled.

6.5 Remote resources

6.5.1 Field unit

ACTUAL VALUES ⇨⇩ REMOTE RESOURCES ⇨⇩ FIELD UNIT U1(U8)

■ FIELD UNIT U1 ■ ID: U 1	⇔	FIELD UNIT STATUS: DISABLED	Range: Disabled, Enabled
	⇩	BRICK SERIAL NUMBER:	
	⇩	BRICK ORDER CODE: CC-05	
	⇩	BRICK DIGITAL CORE: 0	
	⇩	LOCAL TRANSCEIVER: TX POWER: 0.0 dBm	
	⇩	BRICK TRANSCEIVER RX POWER: 0.0 dBm	
	⇩	BRICK TRANSCEIVER TX POWER: 0.0 dBm	
	⇧	LOCAL TRANSCEIVER RX POWER: 0.0 dBm	

This menu displays when using a Process Bus Module for a HardFiber Brick.

6.6 Records

6.6.1 Fault reports

ACTUAL VALUES ⇨⇩ RECORDS ⇨ FAULT REPORTS ⇨ FAULT REPORT 1(15)

NO FAULTS TO REPORT			
or			
■ FAULT REPORT 1 ■	⇔	FAULT 1 LINE ID: SRC 1	Range: SRC 1, SRC 2, SRC 3, SRC 4
	⇩	FAULT 1 DATE: 2000/08/11	Range: YYYY/MM/DD
	⇩	FAULT 1 TIME: 00:00:00.000000	Range: HH:MM:SS.ssssss
	⇩	FAULT 1 TYPE: ABG	Range: not available if the source VTs are in the "Delta" configuration
	⇩	FAULT 1 LOCATION 00.0 km	Range: not available if the source VTs are in the "Delta" configuration
	⇩	FAULT 1 FAULTED SEGMENT: Local	Range: N/A, Local (two-terminal configuration and local section for three-terminal), Remote 1, Remote 2 (three-terminal configuration only)
	⇩	FAULT 1 RECLOSE SHOT: 0	Range: where applicable

⇳	**FAULT 1 LOOP RESIST: 0.00 Ohms**	Range: 0 to 327.67 Ohms
⇧	**FAULT 1 LOOP REACT: 0.00 Ohms**	Range: -327.67 to 327.67 Ohms
⇧	**FAULT 1 FAULT RESIST: 0.00 Ohms**	Range: 0 to 327.67 Ohms

The latest 15 fault reports can be stored. The most recent fault location calculation (when applicable) is displayed in this menu, along with the date and time stamp of the event which triggered the calculation. See the **SETTINGS ⇨ PRODUCT SETUP ⇨⇩ FAULT REPORTS** menu for assigning the source and trigger for fault calculations. See the **COMMANDS ⇨⇩ CLEAR RECORDS** menu for manual clearing of the fault reports and to the **SETTINGS ⇨ PRODUCT SETUP ⇨⇩ CLEAR RELAY RECORDS** menu for automated clearing of the fault reports.

The faulted segment of the line is indicated when the synchronized voltage and currents method is used. When the faulted segment cannot be determined, the **FAULT 1 FAULTED SEGMENT** value displays "N/A". For three-terminal lines, the fault location (distance to the fault) is reported as seen from the terminal adjacent to the fault. A FlexAnalog, Faulted Segment, is linked to **FAULT 1 FAULTED SEGMENT**, to indicate the faulted segment, where N/A is denoted as 0, Local as 1, Remote 1 as 2, and Remote 2 as 3. In the three-terminal application, if the fault is identified between the local terminal and the tap point, the operand TAP-LOCAL FAULT is then asserted high at the local relay.

The **FAULT 1 FAULT RESIST** displays the fault resistance at the fault point, which is shown in the secondary ohms. The calculation is explained in the Theory of Operation chapter.

The **FAULT 1 LOOP RESISTANCE** and **REACTANCE** are expressed in secondary ohms. When the multi-ended fault location method is applied, the fault loop impedance is calculated as the summation of fault resistance and faulted portion of the line positive sequence impedance. The fault loop resistance is calculated by

$$R_{loop} = R_F + D_{pu} \times Real(Z_1) \qquad \textbf{Eq. 6-7}$$

The fault loop reactance is calculated by

$$X_{loop} = D_{pu} \times Imag(Z_1) \qquad \textbf{Eq. 6-8}$$

where

R_F is the fault resistance in secondary ohms

Z_1 is the line positive-sequence impedance

D_{pu} is the distance to fault in per unit

When the single-ended fault location method is applied, the fault loop impedance is calculated as per the following equation.

$$Z_{loop} = V_{loop} / I_{loop} \qquad \textbf{Eq. 6-9}$$

The table defines the loop voltage and current.

Table 6-3: Quantities used to calculate fault loop impedances

Fault type	V_{loop}	I_{loop}
AG	VA	IA + (Z0/Z1-1)*I0 + Z0M/Z1*IG/3
BG	VB	IB + (Z0/Z1-1)*I0 + Z0M/Z1*IG/3
CG	VC	IC + (Z0/Z1-1)*I0 + Z0M/Z1*IG/3
AB, ABG	VA – VB	IA - IB
BC, BCG	VB – VC	IB - IC
CA, CAG	VC – VA	IC - IA
ABC	Average of AB, BC, CA loop impedances	

Where VA, VB, VC are phase voltage phasors in secondary volts; IA, IB, IC are current phasors in secondary amps, I0 is the zero sequence current phasors in secondary amps; and IG is the ground current from the parallel line scaled to the source phase CT in secondary amps. Z0/Z1 is the zero sequence impedance to positive sequence impedance ratio, and Z0M/Z1 is mutual zero sequence impedance to positive sequence impedance ratio.

NOTE

VTs of the **FAULT REPORT 1 SOURCE** must be connected in Wye or **VT SUBSTITUTION** must be set correctly for the Delta connected VT to display the loop impedance and fault resistance for single phase-to-ground faults.

For the application of partially parallel circuits and in the case of single phase-to-ground faults, the reported fault resistance and fault loop impedance may not be accurate even the compensation method is applied.

Depending on the number of terminals and the location method applied, the fault resistance and loop impedance are reported in the different ways as tabulated in the following table.

Table 6-4: Report mechanism for fault resistance and loop impedance

Method	Number of terminals	Fault resistance	Loop impedance
Multi-ended	2	Report at two terminals, seen from the individual end	
	3	Only report at the line terminal of the faulted segment. At the other two terminals, results are not applicable, set values to the maximum number 9999.99.	
Single-ended	2	Not applicable, set to the maximum number 9999.99	Report at two terminals, seen from the individual end
	3	Not applicable, set to the maximum number 9999.99	Report at all terminals, but the value is only accurate at the line terminal of the faulted segment

6.6.2 Event records

6.6.2.1 Enhanced and standard front panels

ACTUAL VALUES ⇨⇩ RECORDS ⇨⇩ EVENT RECORDS

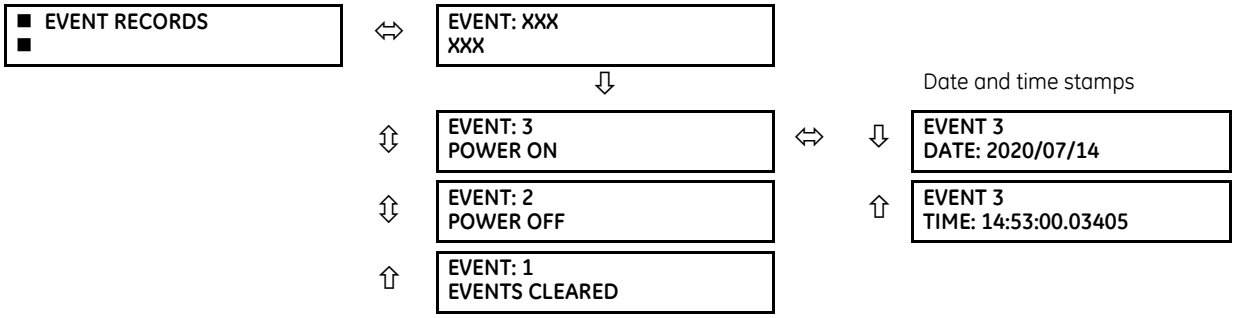

The event records menu shows the contextual data associated with up to the last 1024 events, listed in chronological order from most recent to oldest. When all 1024 event records have been filled, the oldest record is removed as a new record is added. Each event record shows the event identifier/sequence number, cause, and date/time stamp associated with the event trigger. See the **COMMANDS ⇨⇩ CLEAR RECORDS** menu for clearing event records.

Only major output operands generate events, not every operand. Elements that assert output per phase, for example, log operating phase output only without asserting the common three-phase operand event.

See also the system log (syslog) information in the previous chapter.

The event records are also viewable in the software and in a web browser. The figure shows the event records in the software. To view them in a web browser, enter the IP address of the device. When an oscillography icon displays, click it to open it.

Figure 6-6: Event records viewed in EnerVista software

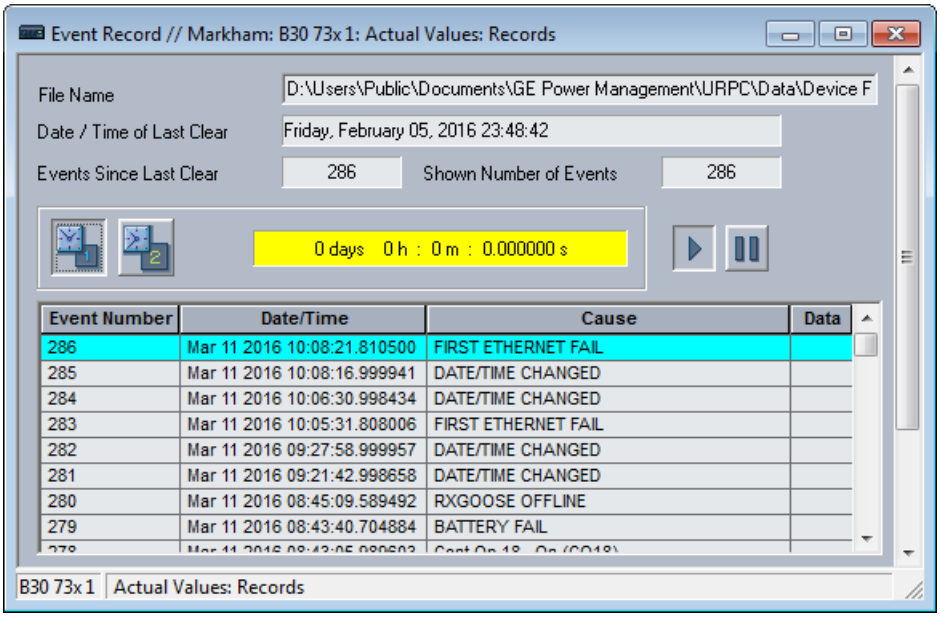

6.6.2.2 Graphical front panel

To display the event records page, press the **Home** pushbutton then the **Event Record** Tab pushbutton.

The newest event is always at the top.

Up and Down pushbuttons move the event selector up and down. When the selector is at the bottom of the display, the Down pushbutton also scrolls the page, and similarly when the active selector is at the top of the display the Up pushbutton scroll the page.

A selected event is highlighted in yellow and becomes active by pressing the Up or Down pushbutton.

There are two event markers, one green, the other cyan. To mark some an event, use the Up and Down pushbuttons to select it (highlight in yellow), then press the green or cyan Mark Event Tab pushbutton. The mark color hides the selector until the selector is moved. A field at the top of the page shows the interval between the two marks.

Figure 6-7: Event record

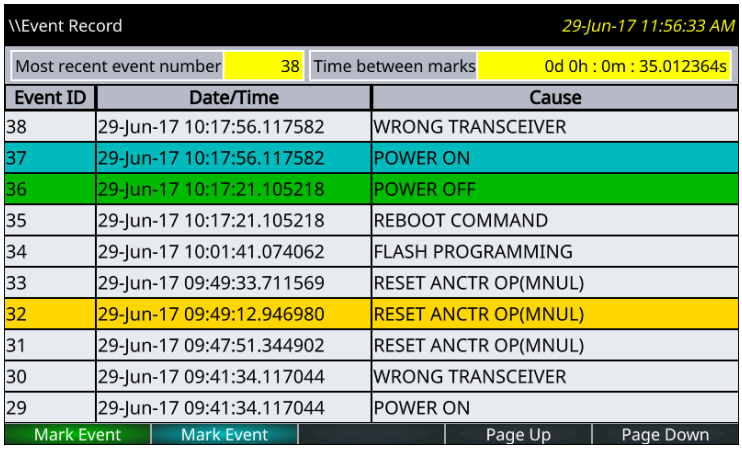

6.6.3 Oscillography

6.6.3.1 Enhanced and standard front panels

ACTUAL VALUES ⇨⇩ RECORDS ⇨⇩ OSCILLOGRAPHY

■ OSCILLOGRAPHY ■	⇔	FORCE TRIGGER? No	Range: No, Yes
	⇕	NUMBER OF TRIGGERS: 0	
	⇕	AVAILABLE RECORDS: 0	
	⇕	CYCLES PER RECORD: 0	
	⇧	LAST CLEARED DATE: 2019/07/14 15:40:16	

This menu allows the user to view the number of triggers involved and number of oscillography traces available. The cycles per record value is calculated to account for the fixed amount of data storage for oscillography. See the Oscillography section of chapter 5 for details.

A trigger can be forced here at any time by setting "Yes" to the FORCE TRIGGER? command. See the **COMMANDS ⇨⇩ CLEAR RECORDS** menu for information on clearing the oscillography records.

6.6.4 Data logger

ACTUAL VALUES ⇨⇩ RECORDS ⇨⇩ DATA LOGGER

■ DATA LOGGER ■	⇔	OLDEST SAMPLE TIME: 2020/01/14 13:45:51
	⇧	NEWEST SAMPLE TIME: 2020/01/14 15:21:19

The **OLDEST SAMPLE TIME** represents the time at which the oldest available samples were taken. It is static until the log gets full, at which time it starts counting at the defined sampling rate.

The **NEWEST SAMPLE TIME** represents the time the most recent samples were taken. It counts up at the defined sampling rate. If the data logger channels are defined, then both values are static.

See the **COMMANDS ⇨⇩ CLEAR RECORDS** menu for clearing data logger records.

6.6.5 Phasor Measurement Unit records

ACTUAL VALUES ⇨ RECORDS ⇨⇩ PMU RECORDS

■ PMU ■ RECORDS	⇔	NUMBER OF TRIGGERS: 0	Range: 0 to 65535 in steps of 1
	⇧	■ PMU 1 ■ RECORDING	See below

The number of triggers applicable to the Phasor Measurement Unit recorder is indicated by the **NUMBER OF TRIGGERS** value. The status of the phasor measurement unit recorder is indicated as follows.

ACTUAL VALUES ⇨ RECORDS ⇨⇩ PMU RECORDS ⇨ PMU 1 RECORDING

■ PMU 1 ■ RECORDING	⇔	PMU 1 FORCE TRIGGER: No	Range: No, Yes

⇕	PMU 1 AVAILABLE RECORDS: 0	Range: 0 to 65535 in steps of 1
⇕	PMU 1 SECONDS PER RECORD: 0.0	Range: 0 to 6553.5 in steps of 0.1
⇧	PMU 1 LAST CLEARED: 2013/07/14 15:40:16	Range: YYYY/MM/DD HH:MM:SS

6.6.6 Breaker maintenance

ACTUAL VALUES ⇨⇩ RECORDS ⇨⇩ MAINTENANCE ⇨ BREAKER 1(4)

■ BREAKER 1 ■	⇔	BKR 1 ACC ARCING AMP ϕA: 0.00 kA2-cyc
	⇕	BKR 1 ACC ARCING AMP ϕB: 0.00 kA2-cyc
	⇕	BKR 1 ACC ARCING AMP ϕC: 0.00 kA2-cyc
	⇕	BKR 1 OPERATING TIME ϕA: 0 ms
	⇕	BKR 1 OPERATING TIME ϕB: 0 ms
	⇕	BKR 1 OPERATING TIME ϕC: 0 ms
	⇕	BKR 1 OPERATING TIME: 0 ms
	⇕	BKR 1 ARCING AMP ϕA: 0.00 kA2-cyc
	⇕	BKR 1 ARCING AMP ϕB: 0.00 kA2-cyc
	⇕	BKR 1 ARCING AMP ϕC: 0.00 kA2-cyc
	⇕	BKR 1 AMP MAX ϕA: 0.00 kA
	⇕	BKR 1 AMP MAX ϕB: 0.00 kA
	⇧	BKR 1 AMP MAX ϕC: 0.00 kA

There is an identical menu for each of the breakers.

The **BKR 1 ACCING ARC AMP** values are in units of kA^2-cycles. See the **COMMANDS ⇨⇩ CLEAR RECORDS** menu for clearing breaker arcing current records.

The **BREAKER OPERATING TIME** is defined as the slowest operating time of breaker poles that were initiated to open.

All of the values are stored in non-volatile memory and retained with power cycling.

6.7 Product information

6.7.1 Model information

ACTUAL VALUES ⇨⇩ PRODUCT INFO ⇨ MODEL INFORMATION

■ MODEL INFORMATION ■	⇔	ORDER CODE LINE 1: L90-A00-AAA-A0A-A0A-	Range: standard GE order code format
	⇩	ORDER CODE LINE 2: A0A-A0A-A0A	Range: up to 20 alphanumeric characters
	⇩	ORDER CODE LINE 3:	Range: up to 20 alphanumeric characters
	⇩	ORDER CODE LINE 4:	Range: up to 20 alphanumeric characters
	⇩	SERIAL NUMBER:	Range: standard GE serial number format
	⇩	ETHERNET MAC ADDRESS 000000000000	Range: standard Ethernet MAC address format
	⇩	MANUFACTURING DATE:	Range: YYYY/MM/DD HH:MM:SS
	⇩	OPERATING TIME: 0:00:00	Range: operating time in HH:MM:SS
	⇩	PMU FEATURE ACTIVE: No	Range: Yes, No
	⇩	CT/ VT ADVANCED DIAG ACTIVE: No	Range: Yes, No
	⇧	LAST SETTING CHANGE: 2019/01/01 23:11:19	Range: YYYY/MM/DD HH:MM:SS

The order code, serial number, Ethernet MAC address, date and time of manufacture, and operating time are shown here. The rear panel on the device contains similar information. The information is read-only in the software and modifiable on the front panel. For example, the order code can be corrected using the front panel.

ETHERNET MAC ADDRESS — UR devices with firmware 7.0x and above have three Ethernet ports that can be used on three networks. The MAC address displays for port 1. The MAC address for port 2 is one higher. The MAC address for port 3 is one higher than port 2. In redundant mode, the MAC addresses for ports 2 and 3 are the same as port 2.

6.7.2 Firmware revisions

6.7.2.1 Enhanced and standard front panels

ACTUAL VALUES ⇨⇩ PRODUCT INFO ⇨ FIRMWARE REVISIONS

■ FIRMWARE REVISIONS ■	⇔	L90 Relay REVISION: 7.6x	Range: 0.00 to 655.35 Revision number of the application firmware.
	⇩	MODIFICATION FILE NUMBER: 0	Range: 0 to 65535 (ID of the MOD FILE) Value is 0 for each standard firmware release.
	⇩	BOOT PROGRAM REVISION: 7.06	Range: 0.00 to 655.35 Revision number of the boot program firmware.
	⇩	FRONT PANEL PROGRAM REVISION: 2.01	Range: 0.00 to 655.35 Revision number of front panel program firmware.

⇕	**COMPILE DATE:** **2021/04/09 04:55:16**	Range: YYYY/MM/DD HH:MM:SS Date and time when product firmware was built.
⇕	**BOOT DATE:** **2021/02/23 16:41:32**	Range: YYYY/MM/DD HH:MM:SS Date and time when the boot program was built.
⇕	**FPGA PROGRAM:** **REVISION: 01.05**	Range: 0.00 to 655.35 Revision number for FPGA.
⇧	**FPGA DATA:** **2020/09/15 16:41:32**	Range: YYYY/MM/DD HH:MM:SS Date and time when the FPGA was built.

The shown data is illustrative only. A modification file number of 0 indicates that, currently, no modifications have been installed.

6.7.2.2 Graphical front panel

ACTUAL VALUES ⇨⇩ PRODUCT INFO ⇨ FIRMWARE REVISIONS

■ **FIRMWARE REVISIONS** ■	⇔	**L90 Relay** **REVISION: 7.6x**	Range: 0.00 to 655.35 Revision number of the application firmware.
	⇕	**MODIFICATION FILE** **NUMBER: 0**	Range: 0 to 65535 (ID of the MOD FILE) Value is 0 for each standard firmware release.
	⇕	**BOOT PROGRAM** **REVISION: 7.01**	Range: 0.00 to 655.35 Revision number of the boot program firmware.
	⇕	**COMPILE DATE:** **2017/06/15 04:55:16**	Range: YYYY/MM/DD HH:MM:SS Date and time when product firmware was built.
	⇕	**BOOT DATE:** **2016/09/15 16:41:32**	Range: YYYY/MM/DD HH:MM:SS Date and time when the boot program was built.
	⇕	**GFP PROGRAM** **REVISION: 7.60**	Range: 0.00 to 655.35 Revision number of front panel program firmware.
	⇕	**GFP COMPILE DATE:** **2017/03/03 12:58:00**	Range: YYYY/MM/DD HH:MM:SS Date/time when graphical front panel firmware built.
	⇕	**GFP BOOT PROGRAM** **REVISION: 1.00**	Range: 0.00 to 655.35 Revision number of panel boot program firmware.
	⇕	**GFP BOOT COMP. DATE:** **2017/03/03 12:58:00**	Range: YYYY/MM/DD HH:MM:SS Date/time when panel boot program was built.
	⇕	**FPGA PROGRAM** **REVISION: 02.02**	Range: 0.00 to 655.35 Revision number for FPGA.
	⇧	**FPGA DATE:** **2016/09/15 16:41:32**	Range: YYYY/MM/DD HH:MM:SS Date and time when the FPGA was built.

The shown data is illustrative only. A modification file number of 0 indicates that, currently, no modifications have been installed. The date format reflects the format specified for the clock and can vary from that shown here.

L90 Line Current Differential System

Chapter 7: Commands and targets

This chapter outlines the Commands and Targets menus and self-tests/error messages. Commands related to the IEC 61850 protocol are outlined in the IEC 61850 section of the Settings chapter. Log/error messages for IEC 61850 are outlined in the UR Family Communications Guide.

7.1 Commands menu

```
COMMANDS
    ⇩
⇩   ■■ COMMANDS
    ■■ VIRTUAL INPUTS
⇕   ■■ COMMANDS
    ■■ CLEAR RECORDS
⇕   ■■ COMMANDS
    ■■ SET DATE AND TIME
⇕   ■■ COMMANDS
    ■■ RELAY MAINTENANCE
⇕   ■■ COMMANDS
    ■■ PMU ONE-SHOT
⇧   ■■ COMMANDS
    ■■ SECURITY
```

The commands menu contains relay directives intended for operations personnel. All commands can be protected from unauthorized access via the command password; see the Security section of chapter 5 for details. The following flash message appears after successfully command entry.

```
COMMAND
EXECUTED
```

7.1.1 Virtual inputs

COMMANDS ⇨ VIRTUAL INPUTS

■■ COMMANDS ■■ VIRTUAL INPUTS	⇔	Virt Ip 1 Off	Range: Off, On
	⇕	Virt Ip 2 Off	Range: Off, On
		⇩	
	⇧	Virt Ip 64 Off	Range: Off, On

The states of up to 64 virtual inputs are changed here. The first line of the display indicates the ID of the virtual input. The second line indicates the current or selected status of the virtual input. This status is a state off (logic 0) or on (logic 1).

7.1.2 Clear records

COMMANDS ⇨ CLEAR RECORDS

■■ COMMANDS ■■ CLEAR RECORDS	⇔	CLEAR FAULT REPORTS? No	Range: No, Yes
	⇕	CLEAR EVENT RECORDS? No	Range: No, Yes
	⇕	CLEAR OSCILLOGRAPHY? No	Range: No, Yes
	⇕	CLEAR DATA LOGGER? No	Range: No, Yes
	⇕	CLEAR BREAKER 1 ARCING AMPS? No	Range: No, Yes
	⇕	CLEAR BREAKER 2 ARCING AMPS? No	Range: No, Yes
	⇕	CLEAR DEMAND RECORDS? No	Range: No, Yes
	⇕	CLEAR CHANNEL TEST RECORDS? No	Range: No, Yes
	⇕	CLEAR ENERGY? No	Range: No, Yes
	⇕	CLEAR UNAUTHORIZED ACCESS? No	Range: No, Yes
	⇕	CLEAR PMU 1 RECORDS? No	Range: No, Yes
	⇕	CLEAR PMU 1 CONFIG CHANGE COUNTER? No	Range: No, Yes
	⇕	■ CLEAR IEC61850 ■ XWSI OPCNT	See below
	⇕	■ CLEAR IEC61850 ■ XCBR OPCNT	See below
	⇧	CLEAR ALL RELAY RECORDS? No	Range: No, Yes

7

This menu contains commands for clearing historical data such as the event records. Data is cleared by changing a command setting to "Yes" and pressing the **ENTER** key. After clearing data, the command setting automatically reverts to "No."

COMMANDS ⇨ CLEAR RECORDS ⇨⇩ CLEAR IEC61850 XWSI OPCNT

■ CLEAR IEC61850 ■ XWSI OPCNT	⇔	CLEAR XSWI 1 OpCnt? No	Range: No, Yes
		⇩	
	⇧	CLEAR XSWI 24 OpCnt? No	Range: No, Yes

COMMANDS ⇨ CLEAR RECORDS ⇨⇩ CLEAR IEC61850 XCBR OPCNT

■ CLEAR IEC61850 ■ XCBR OPCNT	⇔	CLEAR XCBR 1 OpCnt? No	Range: No, Yes
		⇩	
	⇧	CLEAR XCBR 8 OpCnt? No	Range: No, Yes

The Clear XSWI commands clear the disconnect operation counters for each phase and the three-phase counter. Similarly, the Clear XCBR commands clear the circuit breaker operation counters for each phase and the three-phase counter.

7.1.3 Set date and time

COMMANDS ⇨⇩ SET DATE AND TIME

■■ COMMANDS ■■ SET DATE AND TIME	⇔	SET DATE AND TIME: 2020/01/14 13:47:03	Range: YYYY/MM/DD HH:MM:SS

The date and time can be entered on the front panel keypad. The time setting is based on the 24-hour clock. The complete date, as a minimum, must be entered to allow execution of this command. The new time and date take effect when the **ENTER** key is pressed.

The clock also can be synchronized to the local computer time among several UR devices. Use the **Synchronize Devices** entry in the Online Window area of the EnerVista software. (Click the button at the top of the window that opens.)

When the relay is synchronizing to an external time source such as PTP, IRIG-B, or SNTP, the manually entered time or the manually synchronized time is over-written.

The timescale of the entered time is local time, including daylight savings time where and when applicable.

7.1.4 Relay maintenance

COMMANDS ⇨⇩ RELAY MAINTENANCE

■■ COMMANDS ■■ RELAY MAINTENANCE	⇔	PERFORM LAMP TEST? No	Range: No, Yes
	⇩	PERFORM LCD TEST? Off	Range: Off, Red, Green, Blue, White & Text Pattern, Black & Text Pattern, TV Test Pattern
	⇩	PERFORM PUSHBUTTON TEST? No	Range: No, Yes
	⇩	UPDATE ORDER CODE? No	Range: No, Yes
	⇩	REBOOT RELAY? No	Range: No, Yes

⇕	**SERVICE COMMAND** **0**	Range: 0, 101, 20511
⇧	**SAVE VOLATILE DATA?** **No**	Range: No, Yes

This menu contains commands for relay maintenance purposes. Commands for the lamp test and order code are activated by changing a command setting to "Yes" and pressing the **ENTER** key. The command setting then automatically reverts to "No." The service command is activated by entering a numerical code and pressing the **ENTER** key.

Not all commands display in the software; use the front panel when required.

PERFORM LAMP TEST — Turns on all front panel LEDs and display pixels for a short duration.

PERFORM LCD TEST — This command detects either stuck-ON or stuck-OFF pixels (dead pixels) in the display screen on the graphical front panel. RED/GREEN/BLUE is to display the solid background color in the whole screen. WHITE & TEXT PATTERN shows the white background and black texts. BLACK & TEXT PATTERN shows the black background and white texts. TV TEST PATTERN displays a standard television test pattern (SMPTE color bars). The test screen can be cancelled by pressing any pushbutton or after 30 seconds of inactivity.

PERFORM PUSHBUTTON TEST — This command tests the pushbuttons on the graphical front panel. During testing, press the corresponding pushbutton according to the prompt text. A failure message is given if the expected action is not detected in one minute. Holding the **ESCAPE** button for five seconds to interrupt the test sequence. The designated function of a specific pushbutton is bypassed in the test.

UPDATE ORDER CODE — This command causes the relay to scan the backplane for the hardware modules and update the order code to match. If an update occurs, the following message displays.

```
UPDATING...
PLEASE WAIT
```

There is no impact if there have been no changes to the hardware modules. When an update does not occur, the ORDER CODE NOT UPDATED message displays.

REBOOT RELAY — Restarts the relay so that changes to configuration settings can take effect. In most cases, if changes are made to the configuration settings these changes do not take effect unless the relay is rebooted.

NOTE

With the CyberSentry option, the Administrator and Operator roles can initiate the Reboot Relay command.

7

SERVICE COMMAND — Performs specific L90 service actions. Presently, there are two service actions available. Code "20511" returns all settings to their factory default value and restarts the relay (you then re-enter IP addresses, restart, set unit to "Programmed"). Code "101" is used to clear factory diagnostic information stored in the non-volatile memory. If a code other than these two is entered, the command is ignored and no action is taken. Various self-checking diagnostics are performed in the background while the L90 is running, and diagnostic information is stored on the non-volatile memory from time to time based on the self-checking result. Although the diagnostic information is cleared before the L90 is shipped from the factory, the user can want to clear the diagnostic information for themselves under certain circumstances. For example, you clear diagnostic information after replacement of hardware. Once the diagnostic information is cleared, all self-checking variables are reset to their initial state and diagnostics restart from scratch.

SAVE VOLATILE DATA — Saves this data to compact flash memory prior to shutdown. This allows the saved data to be as recent as possible instead of relying on the periodic timer to save the data.

7.1.5 Phasor Measurement Unit one-shot

COMMANDS ⇨⇩ PMU ONE-SHOT

■■ **COMMANDS** ■■ **PMU ONE-SHOT**	⇔	**PMU ONE-SHOT** **FUNCTION: Disabled**	Range: Enabled, Disabled
	⇕	**PMU ONE-SHOT** **FRACTIONAL SEC: 0**	Range: 0 to 99 in steps of 1

⇧	**PMU ONE-SHOT TIME:** **2020/06/14 7:58:35**	Range: YYYY/MM/DD HH:MM:SS

This feature allows pre-scheduling of a PMU measurement at a specific point in time. It can be used to test for accuracy of the PMU and for manual collection of synchronized measurements through the system, as explained here.

When enabled, the function continuously compares the present time with the pre-set **PMU ONE-SHOT TIME**. When the two times match, the function compares the present sequence number of the measured synchrophasors with the pre-set **PMU ONE-SHOT FRACTIONAL SEC**. When the two numbers match, the function freezes the synchrophasor actual values and the corresponding protocol data items for 30 seconds. This allows manual read-out of the synchrophasor values for the pre-set time and pre-set sequence number (via the faceplate display, supported communication protocols such as Modbus or DNP, and the EnerVista UR Setup software).

When freezing the actual values, the function also asserts a PMU ONE-SHOT OP FlexLogic operand. This operand can be configured to drive an output contact and trigger an external measuring device such as a digital scope with the intent to verify the accuracy of the PMU under test.

With reference to the following figure, the PMU one-shot function (when enabled) controls three FlexLogic operands:

- The PMU ONE-SHOT EXPIRED operand indicates that the one-shot operation has been executed, and the present time is at least 30 seconds past the scheduled one-shot time
- The PMU ONE-SHOT PENDING operand indicates that the one-shot operation is pending; that is, the present time is before the scheduled one-shot time
- The PMU ONE-SHOT OP operand indicates the one-shot operation and remains asserted for 30 seconds afterwards

When the function is disabled, all three operands are de-asserted.

The one-shot function applies to all logical PMUs of a given L90 relay.

Figure 7-1: PMU one-shot FlexLogic operands

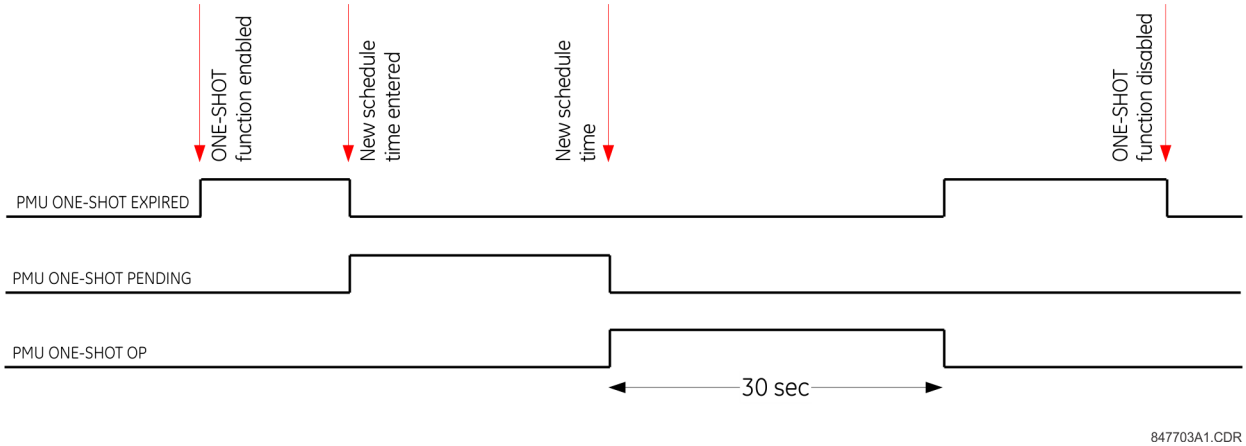

7.1.5.1 Testing accuracy of the PMU

The one-shot feature is used to test accuracy of the synchrophasor measurement. GPS-synchronized tests sets perform a similar function to PMUs; instead of measuring the phasor from physical signals with respect to the externally provided time reference, they produce the physical signals with respect to the externally provided time reference, given the desired phasor values. Therefore the GPS-synchronized test sets cannot be automatically assumed more accurate than the PMUs under test. This calls for a method to verify both the measuring device (PMU) and the source of signal (test set).

With reference to the following figure, the one-shot feature can be configured to trigger a high-accuracy scope to capture both the time reference signal (rising edge of the 1 pps signal of the IRIG-B time reference) and the measured waveform. The high-accuracy high-sampling rate record of the two signals captured by the scope can be processed using digital tools to verify the magnitude and phase angle with respect to the time reference signal. As both the time reference and the measured signals are raw inputs to the PMU under test, their independently captured record, processed using third-party software, is a good reference point for accuracy calculations. Such a record proves useful when discussing the test results, and can be retained as a part of the testing documentation.

Figure 7-2: Using the PMU one-shot feature to test synchrophasor measurement accuracy

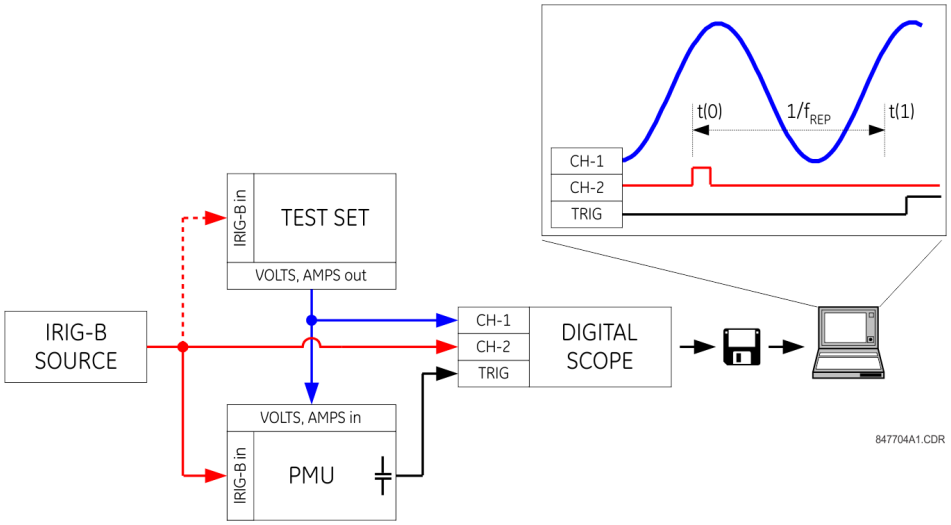

7.1.5.2 Collecting synchronized measurements ad hoc

The one-shot feature can be used for ad hoc collection of synchronized measurements in the network. Two or more PMUs can be pre-scheduled to freeze their measurements at the same time. When frozen, the measurements can be collected using the EnerVista software or a protocol client.

7.1.6 Security

COMMANDS ⇨⇩ SECURITY

■■ SECURITY ■■	⇔	**ADMINISTRATOR LOGOFF: No**	Range: Yes, No
	⇩	**ENGINEER LOGOFF: No**	Range: Yes, No
	⇩	**OPERATOR LOGOFF: No**	Range: Yes, No
	⇩	**CLEAR SECURITY DATA: No**	Range: Yes, No

With the CyberSentry option, this setting is available to enable or disable the following commands.

ADMINISTRATOR LOGOFF — Selecting 'Yes' allows the Supervisor to forcefully logoff an administrator session.

ENGINEER LOGOFF — Selecting 'Yes' allows the Supervisor to forcefully logoff an engineer session.

OPERATOR LOGOFF — Selecting 'Yes' allows the Supervisor to forcefully logoff an operator session.

CLEAR SECURITY DATA — Selecting 'Yes' allows the Supervisor to forcefully clear all the security logs and clears all the operands associated with the self-tests.

7.2 Targets menu

TARGETS

⇩

⇩	**PHASE TOC4** **OP: A B -**	Displayed only if targets for this element are active. Example shown.
⇳	**DIGITAL ELEMENT 48:** **LATCHED**	Displayed only if targets for this element are active. Example shown.
	⇩	
⇧		

A target enables the EnerVista UR Setup software to monitor automatically and display the status of any active target messages of all the devices inserted into that site.

Each L90 element with a TARGET setting has a target message that when activated by its element is displayed in sequence with any other currently active target messages in the **TARGETS** menu. In the example shown, the Phase TOC4 and Digital Element 48 target settings are active and so have their targets displayed. The down arrow below the two elements indicates that there can be other active elements beyond these two.

For more information, see the description of target messages in the next section, and the Introduction to Elements section in the Settings chapter for instructions on TARGET setting.

When no targets are active, the display reads **NO ACTIVE TARGETS**.

7.2.1 Target messages

When there are no active targets, the first target to become active causes the display to immediately default to that message. If there are active targets and the user is navigating through other messages, and when the default message timer times out (i.e. the keypad has not been used for a determined period of time), the display again defaults back to the target message.

The range of variables for the target messages is described below. Phase information is included if applicable. If a target message status changes, the status with the highest priority displays.

Table 7-1: Target message priority status

Priority	Active status	Description
1	OP	element operated and still picked up
2	PKP	element picked up and timed out
3	LATCHED	element had operated but has dropped out

If a self test error is detected, a message appears indicating the cause of the error. For example UNIT NOT PROGRAMMED indicates that the minimal relay settings have not been programmed.

7

7.2.2 Relay self-tests

7.2.2.1 Description

The relay performs a number of self-test diagnostic checks to ensure device integrity. The two types of self-tests (major and minor) are listed in the following tables. When either type of error occurs, the Trouble LED Indicator turns on and a target message displays. All errors record an event in the event recorder. Latched errors can be cleared by pressing the **RESET** key, providing the condition is no longer present.

Major self-test errors also result in the following:

- The critical fail relay on the power supply module de-energizes
- All other output relays de-energize and are prevented from further operation
- The front panel In Service LED indicator turns off
- A RELAY OUT OF SERVICE event is recorded

To view error messages in EnerVista software:

1. Access **Actual Values > Records > Event Records**.

7.2.2.2 Major self-test error messages

The major self-test errors are outlined in this section.

INCOMPATIBLE H/W:
Contact Factory (xxx)

- *Latched target message*: Yes.
- *Description of problem*: One or more installed hardware modules is not compatible with the L90 order code.
- *How often the test is performed*: Module dependent.
- *What to do*: Contact the factory and supply the failure code noted in the display. The "xxx" text identifies the failed module (for example, F8L).

EQUIPMENT MISMATCH:
with 2nd line detail

- *Latched target message*: No.
- *Description of problem*: The number or type of installed hardware modules does not match the order code stored in the L90. An example is when a standard front panel is installed and the order code on the L90 expects a graphical front panel. As another example, "Card F8L Missing" means that hardware module 8L is missing from slot F inside the UR device.
- *How often the test is performed*: On power up. Afterwards, the backplane is checked for missing cards every five seconds.
- *What to do*: Check all modules against the order code, ensure they are inserted properly, and cycle control power. If a module has intentionally been added or removed, refresh the order code under **Device Setup**. If the problem persists, contact the factory.

FLEXLOGIC ERROR:
with 2nd line detail

- *Latched target message*: No.
- *Description of problem*: A FlexLogic equation is incorrect.
- *How often the test is performed*: The test is event driven, performed whenever FlexLogic equations are modified.
- *What to do*: Finish all equation editing and use self tests to debug any errors.

7

UNIT NOT PROGRAMMED:
Check Settings

- *Latched target message*: No.
- *Description of problem*: The **PRODUCT SETUP ⇨⇩ INSTALLATION ⇨ RELAY SETTINGS** setting indicates the L90 is not programmed.
- *How often the test is performed*: On power up and whenever the **PRODUCT SETUP ⇨⇩ INSTALLATION ⇨ RELAY SETTINGS** setting is altered.
- *What to do*: Program all settings and then set **PRODUCT SETUP ⇨⇩ INSTALLATION ⇨ RELAY SETTINGS** to "Programmed."

DIAGNOSTIC FAILURE___:
Self Test Error

- *Latched target message*: No.
- *Description of problem*: Internal recovery failure detected.
- *How often the test is performed*: Upon recovery.
- *What to do*: Extract a Service Report through UR Setup software. Contact technical support and supply details of the failure code on the display.

SYSTEM FAILURE___:
with 2nd line detail

- *Latched target message*: Yes.
- *Description of problem*: Relay system failure detected.
- *How often the test is performed*: Continuous.
- *What to do*: Extract a Service Report through UR Setup software. Contact technical support and supply details of the failure code on the display.

7.2.2.3 Minor self-test error messages

Most of the minor self-test errors can be disabled. See the settings in the User-programmable Self-tests section in chapter 5.

DIAGNOSTIC ALARM:
with 2nd line detail

- *Latched target message*: Yes.
- *Description of problem*: Transient communication failure detected.
- *How often the test is performed*: Module dependent.
- *What to do*: Extract a Service Report through UR Setup software. Contact technical support and supply details of the failure code on the display.

MAINTENANCE ALERT:
Replace Battery

- *Latched target message*: Yes.
- *Description of problem*: The battery is weak or not functioning. It powers the real time clock. This message displays as Battery Fail in the event records. When the battery weakness reaches a critical level, the message displays persistently on the front panel and no front panel key navigation is possible.
- *How often the test is performed*: The battery is monitored every five seconds. The error message displays after 60 seconds if the problem persists.
- *What to do*: Replace the battery as outlined in the Maintenance chapter.

MAINTENANCE ALERT:
Direct I/O Ring Break

- *Latched target message*: No.
- *Description of problem*: Direct input and output settings are configured for a ring, but the connection is not in a ring.
- *How often the test is performed*: Every second.
- *What to do*: Check direct input and output configuration and wiring.

MAINTENANCE ALERT:
Bad IRIG-B Signal

- *Latched target message*: No.
- *Description of problem*: A bad IRIG-B input signal has been detected.
- *How often the test is performed*: Monitored whenever an IRIG-B signal is received.
- *What to do*: Ensure the following:
  - The IRIG-B cable is properly connected.
  - Proper cable functionality (that is, check for physical damage or perform a continuity test).
  - The IRIG-B receiver is functioning.
  - Check the input signal level (it can be less than specification).

If none of these apply, then contact the factory.

MAINTENANCE ALERT:
****Bad PTP Signal****

- *Latched target message*: No.
- *Description of problem*: No PTP enabled port has good PTP signal input.
- *How often the test is performed*: Activated when no acceptable signal is being received.
- *What to do*: Ensure the following:
  - The Ethernet cable(s) are properly connected.
  - At least one PTP grandmaster-capable clock is functioning.
  - If a strict power profile (PP) is enabled, that entire network is PP compliant.
  - The network is delivering PTP messages to the relay.

MAINTENANCE ALERT:
SNTP Failure

- *Latched target message*: No.
- *Description of problem*: The SNTP server is not responding.
- *How often the test is performed*: Every 10 to 60 seconds.
- *What to do*: Check that Ethernet cable(s) are properly connected. Check that configuration for the SNTP server corresponds to the actual server settings. Check connectivity to the server (ping the server IP address).

MAINTENANCE ALERT:
4L Discrepancy

- *Latched target message*: No.
- *Description of problem*: A discrepancy has been detected between the actual and desired state of a latching contact output of an installed type "4L" module.
- *How often the test is performed*: Upon initiation of a contact output state change.
- *What to do*: Verify the state of the output contact and contact the factory if the problem persists.

MAINTENANCE ALERT:
GGIO Ind xxx oscill

- *Latched target message*: No.
- *Description of problem*: A data item in a configurable GOOSE data set is oscillating.
- *How often the test is performed*: Upon scanning of each configurable GOOSE data set.
- *What to do*: The "xxx" text denotes the data item that has been detected as oscillating. Evaluate all logic pertaining to this item.

MAINTENANCE ALERT:
Front Panel Trouble

- *Latched target message*: No.
- *Description of problem*: The graphical front panel is not communicating with the CPU module.
- *How often the test is performed*: Every five seconds.

What to do: Open the graphical front panel and check the connection between the CPU module and the front panel, then restart the relay in EnerVista under **Commands > Relay Maintenance > Reboot Relay** or by powering the relay off and on. If trouble persists, contact the factory.

MAINTENANCE ALERT:
GFP Version Mismatch

- *Latched target message*: No.
- *Description of problem*: The graphical front panel firmware revision is not synchronized with that of the CPU module in the relay.
- *How often the test is performed*: Whenever connection is established between the graphical front panel and the CPU module in the relay.
- *What to do*: Perform UR firmware upgrade with the graphical front panel connected to the CPU module in the relay. It can be done using any communication interface (Ethernet or USB). This synchronizes the graphical firmware revision with that of the relay. If trouble persists, contact the factory.

DIRECT I/O FAILURE:
COMM Path Incomplete

- *Latched target message*: No.
- *Description of problem*: A direct device is configured but not connected.
- *How often the test is performed*: Every second.
- *What to do*: Check direct input and output configuration and wiring.

RxGOOSE FAIL:
Missing messages

- *Latched target message*: No.
- *Description of problem*: One or more RxGOOSE messages are not being received.
- *How often the test is performed*: The self-test is activated when no message is received within the expected time interval, which is the time-to-live time in the previous message. This time can be from milliseconds to minutes.
- *What to do*: Check GOOSE setup.

RXGOOSE OFFLINE:
COMM Path Incomplete

- *Latched target message*: No.
- *Description of problem*: One or more GOOSE devices are not responding.
- *How often the test is performed*: Event driven. The test is performed when a device programmed to receive GOOSE messages stops receiving. This can be from 1 to 60 seconds, depending on GOOSE packets.
- *What to do*: Check GOOSE setup.

AGGREGATOR ERROR:

- *Latched target message*: No.
- *Description of problem*: The second line of this self-test error indicates the problem with the PMU Aggregator.
- *How often the test is performed*: Each time a PMU's related settings is changed.
- *What to do*: Correct the problem indicated in the second line or contact the factory.

TEMP MONITOR:
OVER TEMPERATURE

- *Latched target message*: Yes.
- *Description of problem*: The ambient temperature is greater than the maximum operating temperature (+80°C).
- *How often the test is performed*: Every hour.
- *What to do*: Remove the L90 from service and install in a location that meets operating temperature standards.

SYSTEM EXCEPTION:
Press RESET Key

- *Latched target message*: Yes.
- *Description of problem*: Abnormal restart from modules being removed or inserted while the L90 is powered-up, when there is an abnormal DC supply, or as a result of internal relay failure.
- *How often the test is performed*: Event driven.
- *What to do*: Contact the factory.

FIRST ETHERNET FAIL

SECOND ETHERNET FAIL

THIRD ETHERNET FAIL

- *Latched target message*: Yes.
- *Description of problem*: A link loss detection on an Ethernet port. The link loss is due to unplugging the cable or the switch port being down.
- *How often the test is performed*:
- *What to do*: Check the connection.

WRONG TRANSCEIVER

- *Latched target message*: Yes.
- *Description of problem*: The type of SFP does not match the CPU type. The SFP is a silver device that plugs into the rear of the CPU module.

  T-type CPU = All ports support fiber SFPs only

  U-type CPU = Maintenance port needs RJ45 SFP and the other two ports fiber SFPs

  V-type CPU = All ports support RJ45 SFPs only

  The consequence of an incorrect SFP can range from damage to the L90 to no power information for the L90 on its web page (enter IP address in a web browser, then click the **SFP Transceiver Information** — only the type of SFP displays and not power data).
- *What to do*: A web page "SFP Transceiver Information" is provided. This page displays the type of the SFP in it. This data is to be used with the CPU type to know the cause of the problem.

SFP MODULE x FAIL

- *Latched target message*: No.
- *Description of problem*: A faulty small form-factor pluggable port (SFP) or unplugging of the SFP generates this self test message.
- *What to do*: The web page "SFP Transceiver Information" described in the previous section applies for this self test as well. The "SFP Module Fail" has higher priority and it suppresses the "Ethernet Fail" target message. The "SFP MODULE FAIL FUNCTION" setting enables/disables this self test. The target for this self test is priority-based, with the third one being the highest priority. For example, if all three SFP modules fail, then the third SFP target is activated. If the third SFP module failure resolves, then the second SFP target is activated.

AUTHENTICATION FAIL

- *Latched target message*: No.
- *Description of problem*: The number of failures threshold was exceeded.

- *What to do*: Wait for the lockout interval and try to authenticate again.

FIRMWARE LOCK

- *Message*: "Unauthorized firmware attempt"
- *Latched target message*: No.
- *Description of problem*: A firmware upgrade operation was attempted while the lock relay setting was enabled.
- *What to do*: Ask the Supervisor to unlock the relay and try again.

SETTING LOCK

- *Message*: "Unauthorized setting write"
- *Latched target message*: No.
- *Description of problem*: A setting write was attempted while the lock relay setting was enabled.
- *What to do*: Ask the Supervisor to unlock the settings and try again.

SERVER UNAVAILABLE

- *Message*: "An attempt to contact the Radius server has failed"
- *Latched target message*: No.
- *Description of problem*: The RADIUS authentication server is unavailable.
- *What to do*: Verify network connectivity and try again.

DOS PARTITION ALARM:
SELF-TEST ERROR

- Description of problem: There is a problem with the Compact Flash memory in the CPU module.
- How often the test is performed: On relay power-up and afterwards once every 24 hours.
- What to do: Contact the factory.

PROTOTYPE FIRMWARE:
Self Test Error

- *Description of problem*: Seen until the builds is tagged as being 'release candidate' or 'gold' builds.
- *What to do*: Update firmware to either of these builds.

STORAGE MEDIA ALARM:
Self Test Error

- *Description of problem*: The CPU module fails to read from or write to the Compact Flash (CF) card inside the module. The CF card stores certain non-volatile data, such as event records, oscillography and datalogger records, fault report values, and non-volatile actual values. Settings are not stored in CF and hence are unaffected by this self-test.
- *Latched target message*: No.
- *How often the test is performed*: On power up. Afterwards, every time the CPU accesses the CF card for reading or writing.
- *What to do*: Contact the factory.

RRTD COMM FAIL:
Self Test Error

- *Description of problem*: Communications with remote RTD unit (RRTD) or GPM-F failed for longer than 10 seconds.
- *Latched target message*: No.

- *How often the test is performed*: Runs only if "Com2 Usage" is set to RRTD or RRTD&GPM-F. Checked every five seconds.
- *What to do*: Check COM2 port settings, check RS485 cables.

VOLTAGE MONITOR:
with 2nd line detail

- *Description of problem*: The relay detected a problem with the internal voltage rails for longer than 25 seconds.
- *Latched target message*: Yes.
- *How often the test is performed*: Every five seconds.
- *What to do*: Contact GE customer service.

BKR RESTRIKE ELMENT:
MAXIMUM EXCEEDED

- *Description of problem*: In version 7.41, if more breaker elements are enabled than the number of installed DSP modules, the excess elements are not functional and can trigger self-test error "Module Failure 33." In release 7.42 and later, the firmware does not allow enabling more breaker restrike elements than the number of installed DPS modules, and upon attempt, the relay displays a minor self-test message as follows:

  "BKR RESTRIKE ELMENT:

  MAXIMUM EXCEEDED"
- *What to do*: Upgrade to version 7.42 or later.

7.2.2.4 Instantaneous protection elements trip security

Some self-tests are not fast enough to detect erroneous data and block protection elements, requiring additional measures. To secure instantaneous elements, in addition to the self-tests described, there are supervising elements that validate "fault" conditions and release IOC and differential elements operation.

These trip security elements use currents samples and phasors from the same sources as supervised protection elements to detect independently true "fault" conditions from IOC or differential. Trip security elements do not have any user settings and are enabled as soon as corresponding instantaneous elements are enabled. During laboratory testing, these elements can be disabled by activating any IED test mode via the **SETTINGS ⇨⇩ TESTING ⇨ TEST MODE FUNCTION**.

Trip security elements do not affect protection performance in any way.

7

Instantaneous Overcurrent

All enabled Phase IOC, Negative-Sequence, and Neutral IOCs in the active setting group are supervised by the trip security element. The goals of the IOC trip security are as follows:

- Detect erroneous operate current due to wiring or data acquisition problem resulting in one phase current dropping to zero, resulting in erroneous negative-sequence and neutral currents
- Justify current phasor magnitude increase with simultaneous current changes from samples

This is achieved by comparing current values of the current phasors and samples change with the values taken two cycles before. Additionally, trip security elements monitor "pre-fault" current to detect if operate condition is happening as a result of current decrease instead of increase.

The element is armed when there are no disturbances in currents for five cycles.

Differential elements (bus, transformer, stator)

Differential trip security runs for each differential zone. It monitors if differential current increase above the pickup setting is confirmed by the disturbance detectors for each differential zone input. When a differential zone fault occurs and at least two zone inputs carry some load, at least two disturbance detectors have to be activated. Or when there is no load at any zone inputs (zone is energized but does not carry any load), at least one disturbance detector has to be activated.

Consequently:

- If there is not any disturbance detector activation in at least one zone input — Differential trip is inhibited

- If there is just one zone input disturbance detector activation but load is present in at least two zone inputs prior to the "fault" — Differential trip is inhibited
- If there is more than one disturbance detector zone input activation — Differential trip is allowed (normal scenario)

When differential trip is inhibited by the trip security element, no setting group change is allowed.

7.2.2.5 HardFiber major self-test error messages

In addition to those provided by the standard UR-series devices, the UR devices implement HardFiber self-tests. These are listed here. Any abnormal diagnostic condition indicated by the LEDs or the critical failure relay also results in a self-test message, so troubleshooting is described here. For other relays, such at the B95^{Plus}, see that product's instruction manual.

EQUIPMENT MISMATCH

- *Description of problem*: The number or type of installed hardware modules does not match the order code stored in the CPU. The standard UR-series Equipment Mismatch self-test is extended to cover the possible presence of a Process Card.
- *Severity*: Protection is not available and all contact outputs and shared outputs are de-asserted.
- *What to do*: Check all modules against the order code. Ensure they are inserted properly, and cycle the control power. If a module has intentionally been added or removed use the Update Order Code command to notify the relay that the current module configuration is correct.

MODULE FAILURE

- *Description of problem*: UR-series device module hardware failure detected.
- *Severity*: Protection is not available and all contact outputs and shared outputs are de-asserted.
- *What to do*: Contact the factory and supply the failure code noted in the display. Text in the message identifies the failed module (for example, H81). If operated on a Process Card failure, the Module Fail self-test seals-in (latches) till the UR-series device is restarted.

PROCESS BUS FAILURE

- *Description of problem*: Mission critical data is not available via the process bus. An AC quantity is considered critical if both AC bank origins and the crosschecking settings are other than None. This self-test is also initiated by an AC input discrepancy being detected. See the description in the **Crosschecking** setting in the HardFiber manual for further information. In addition, this self-test can be initiated by user logic responding to loss of critical contact input/output or other data using the **Process Bus Failure Operand** user-programmable self-test setting. This setting is located in the **Settings > Product Setup > User-Programmable Self Test** menu.
- *Severity*: Protection is not available and all contact outputs and shared outputs are de-asserted.
- *What to do*: First rectify any Process Bus Trouble and Brick Trouble self-test errors. Check the actual value of the operand referenced by the Process Bus Failure Operand setting, and if "On," determine the cause and rectify.

  If the problem persists with the foregoing all clear, the cause must be an AC input discrepancy, which is typically the result of problems in the input signals to the Bricks, or faults in the Brick input conditioning hardware. If the error was annunciated the first time significant signal was encountered, suspect the former cause and check the copper connections external to the Brick. Where multiple UR-series devices have self-test errors, look for common causes.

  To further isolate AC input discrepancy errors, put the relay in test-isolated mode, then one by one, temporally change an AC bank Crosschecking setting to None, until the Process Bus Failure clears. Once the problem AC bank has been identified, the values from each of the two Bricks can be examined individually by temporarily mapping each to an AC bank with a single origin.

7.2.2.6 HardFiber minor self-test error messages

PROCESS BUS TROUBLE

- *Description of problem*: Communications problems with one or more Bricks. The text of the message identifies the affected field units. This self-test is initiated by low received signal levels at either the Brick or Process Card end, and by the sustained failure to receive poll responses from the proper Brick.
- *Severity*: This self-test error does not directly inhibit protection. However, the affected Brick inputs/outputs may not be available to the UR device.
- *What to do*: Check the field unit actual values. An indication of equipment mismatch means that messages are being received from a Brick, but there is a discrepancy between the settings and the actual Brick serial number, order code, and/or core number. Check that the correct core on the correct Brick is patched through to the correct Process Card port, and that the field unit settings are correct. An indication of communications loss means that no messages are being received. Check that the patching is correct, and that the Brick has power. If that is not the problem, use a professional optical fiber connector cleaning kit to clean both sides of all optical fiber connections from the Process Card through to the affected Brick. If the problem continues after cleaning, consult the factory.

BRICK TROUBLE

- *Description of problem*: Brick internal self-testing has detected trouble internal to the Brick.
- *Severity*: This self-test error does not directly inhibit protection. However, some or all of the affected Brick inputs/outputs may not be available to the UR device.
- *What to do*: Check the Brick environment for over/under temperatures and the voltage of its power source. If the ambient temperature and supply voltage are within Brick specifications, consult the factory. Troubles resulting from a Brick output failing to respond to an output command can only be detected while the command is active, and so in this case the target is latched. A latched target can be unlatched by pressing the front panel reset key if the command has ended, however the output can still be non-functional.

L90 Line Current Differential System

Chapter 8: Application of settings

This chapter provides example(s) of use.

8.1 CT requirements

8.1.1 Introduction

In general, proper CT selection is required to provide both adequate fault sensitivity and prevention of operation on high-current external faults that can result from CT saturation. The use of high-quality CTs (such as class X) improves relay stability during transients and CT saturation and can increase relay sensitivity. A current differential scheme is highly dependent on adequate signals from the source CTs. Ideally, CTs selected for line current differential protection are based on the criteria described as follows, which presents the high-level CT requirements to avoid saturation and to provide undistorted CT secondary current.

Check the capability of the CTs, and the connected burden, as follows:

1. The CTs should be class TPX or TPY, or IEC class 5P20 or better. Use class TPZ only after discussion with both the manufacturer of the CT and GE Multilin.
2. The CT primary current rating should be somewhat higher than the maximum continuous load current, but not too high relative to the minimum fault current because the differential element minimum pickup setting is 0.2 × CT rating for the phase differential and 0.1 x CT rating for ground differential. Too high CT primary current rating limits sensitivity of the differential element for high-resistive faults.
3. As per the IEEE C37.110-2007 "Guide for the Application of Current Transformers Used for Protective Relaying Purposes," the CT must be capable of a secondary saturation voltage V_K to avoid AC saturation:

   $$V_K > I_S \times Z_S \qquad \textbf{Eq. 8-1}$$

   where

   I_S is maximum CT secondary fault current

   Z_S is total secondary burden $Z_S = R_{CT} + 2 \times R_L + R_R$
4. As per the IEEE C37.110-2007 "Guide for the Application of Current Transformers Used for Protective Relaying Purposes," the CT must be capable of a secondary saturation voltage V_K to avoid DC saturation:

   $$V_K > I_S \times \left(\frac{X}{R} + 1\right) \times Z_S \qquad \textbf{Eq. 8-2}$$

   where

X/R is primary system reactance / resistance ratio

R_{CT} is CT secondary winding resistance

R_L is AC secondary wiring resistance (one-way)

R_R is relay burden at rated secondary current

5. Practically, it is difficult to meet this criteria and avoid saturation completely. The L90 provides several means to ensure security during an external fault, including dual-slope restraint characteristics, adaptive restraint, and CT saturation mechanism, allowing the relay to be secure during severe external faults, while maintaining excellent performance for internal faults. Therefore, knee point voltage requirements with a default 87L settings can be approximately estimated by the following equation:

$$V_K > K_{tf} \times I_S \times Z_S \qquad \textbf{Eq. 8-3}$$

where

K_{tf} is 2 for system X/R > 20 and K_{tf} is 1.5 for system X/R ≤ 20

This is however applicable, where CT ratios are the same, CT burdens at both sides of the line are very close, and when just one CT at each side is used. When CTs are different at both sides (different CT characteristics, CT ratio and burden) or when more than one CT at each side is used, these equation may not provide correct estimation of the required knee point voltage.

For this situation GE provides a CT saturation analysis tool, described in the following section.

8.1.2 CT saturation analysis tool

The CT saturation analysis tool is an Excel spreadsheet provided for users to analyze the L90 reliability during CT saturation caused by an external fault, to investigate the effect of adjusting 87L settings, and to examine the possibility of reducing the CT requirement.

The tool utilizes the CT model and CT saturation calculation algorithm proposed by the IEEE Power System Relaying Committee (PSRC), and it simulates the analog/digital signal processing and data calculations in the L90. The figure shows the interface.

Figure 8-1: CT saturation analysis tool main page

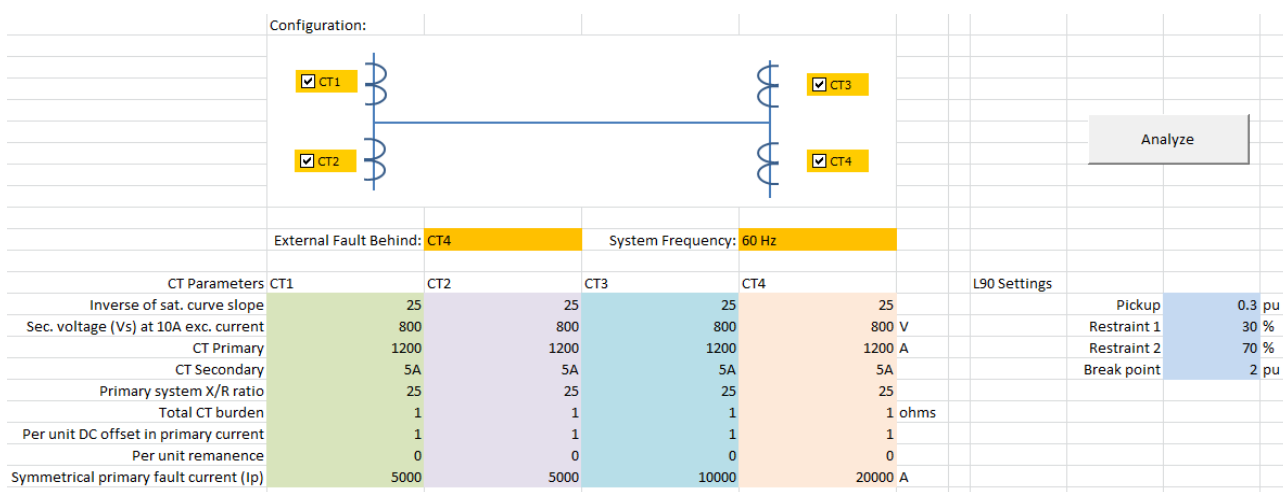

For a system where the CTs are already installed, the CT and system parameters are known. Use the procedure described in the tool to analyze the L90 security during CT saturation and investigate the effect of adjusting 87L settings.

The CT saturation analysis tool allows you to check the application, knowing CT parameters, fault current levels, and distribution through all breakers from short circuit studies, and to analyze L90 performance, having an ability to adjust settings as needed. The tool has all instructions to perform analysis.

Once all data is entered, by clicking the **Analyze** button, you can observe differential and restraint currents through the simulated fault in the **Results** tab, shown as follows. The application is considered secure when the worst through the plot Irestr/Idiff > 1.25 with selected settings and all fault scenarios considered.

Figure 8-2: Tool results for currents

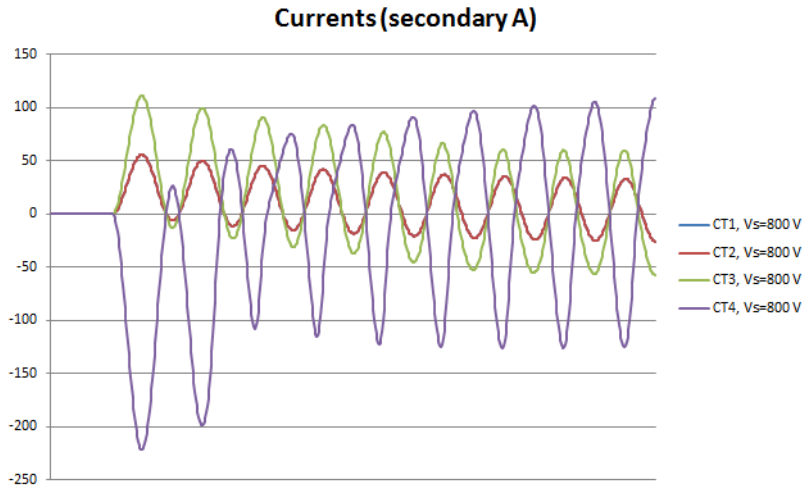

Figure 8-3: Tool results for differential and restraint currents

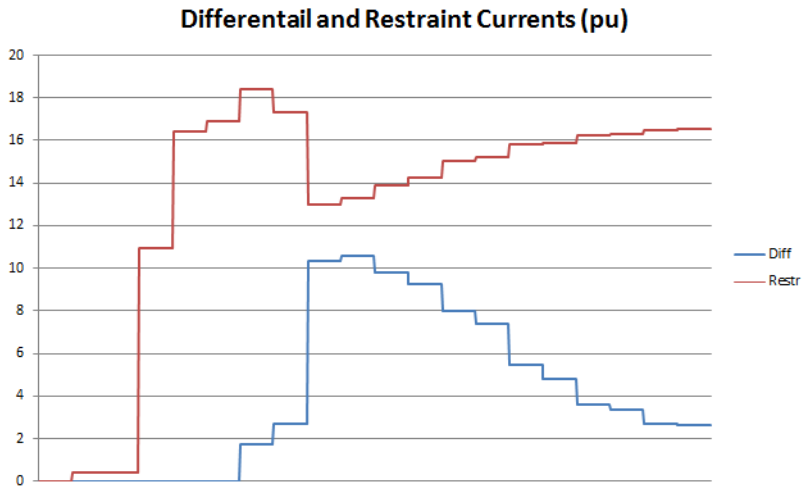

You are encouraged to test different fault locations and different fault levels and distributions per short circuit studies. Alternatively, the tool can help to estimate required CT parameters (ratio and knee point voltage), based on some pre-determined criteria.

8

8.2 Current differential (87L) settings

8.2.1 Introduction

Software is available from the GE Grid Solutions website that is helpful in selecting settings for the specific application. Checking the performance of selected element settings with respect to known power system fault parameters makes it relatively simple to choose the optimum settings for the application.

This software program is also useful for establishing test parameters. It is strongly recommended this program be downloaded. Look for the "L90 Test Tool" on the GE Grid Solutions website, for example in the L90 support documents at https://www.gegridsolutions.com/app/ViewFiles.aspx?prod=l90&type=9

The differential characteristic is defined by four settings: **CURRENT DIFF PICKUP**, **CURRENT DIFF RESTRAINT 1**, **CURRENT DIFF RESTRAINT 2**, and **CURRENT DIFF BREAK PT** (breakpoint). As is typical for current-based differential elements, the settings are a trade-off between operation on internal faults against restraint during external faults.

8.2.2 Current differential pickup

This setting establishes the sensitivity of the element to high impedance faults, and it is therefore good to choose a low level, but this can cause maloperation for an external fault causing CT saturation. The selection of this setting is influenced by the decision to use charging current compensation. If charging current compensation is Enabled, set pickup to a minimum of 150% of the steady-state line charging current, to a lower limit of 10% of CT rating. If charging current compensation is Disabled, set pickup to a minimum of 250% of the steady-state line charging current to a lower limit of 10% of CT rating.

If the CT at one terminal can saturate while the CTs at other terminals do not, increase this setting by approximately 20 to 50% (depending on how heavily saturated the one CT is while the other CTs are not saturated) of CT rating to prevent operation on a close-in external fault.

8.2.3 Current differential restraint 1

The **CURRENT DIFF RESTRAINT 1** setting controls the element characteristic when current is below the breakpoint, where CT errors and saturation effects are not expected to be significant. The setting is used to provide sensitivity to high impedance internal faults, or when system configuration limits the fault current to low values. A setting of 10 to 20% is appropriate in most cases, but increase this to 30% if the CTs can perform quite differently during faults.

8.2.4 Current differential restraint 2

The **CURRENT DIFF RESTRAINT 2** setting controls the element characteristic when current is above the breakpoint, where CT errors and saturation effects are expected to be significant. The setting is used to provide security against high current external faults. A setting of 30 to 40% is appropriate in most cases, but increase this to 70% if the CTs can perform quite differently during faults.

NOTE

Assigning the same value to the **CURRENT DIFF RESTRAINT 1(2)** settings reverts dual slope bias characteristics into single slope bias characteristics.

8.2.5 Current differential break point

The **CURRENT DIFF BREAK PT** setting controls the threshold where the relay changes from using the restraint 1 to the restraint 2 characteristics. Two approaches can be considered, as follows:

- Program the setting to 150 to 200% of the maximum emergency load current on the line, on the assumption that a maintained current above this level is a fault
- Program the setting below the current level where CT saturation and spurious transient differential currents can be expected

The first approach gives comparatively more security and less sensitivity; the second approach provides less security for more sensitivity.

8.2.6 CT tap

If the CT ratios at the line terminals are different, the **CURRENT DIFF CT TAP 1(2)** setting must be used to correct the ratios to a common base. In this case, modify the **CURRENT DIFF BREAK PT** and **CURRENT DIFF PICKUP** settings because the local current phasor is used as a reference to determine which differential equation is used, based on the value of local and

remote currents. If the setting is not modified, the responses of individual relays, especially during an external fault, can be asymmetrical, as one relay can be below the breakpoint and the other above the breakpoint. There are two methods to overcome this potential problem, as follows:

1. Set **CURRENT DIFF RESTRAINT 1** and **CURRENT DIFF RESTRAINT 2** to the same value (for example, 40% or 50%). This converts the relay characteristics from dual slope into single slope and the breakpoint becomes immaterial. Next, adjust differential pickup at all terminals according to CT ratios, referencing the required pickup to the line primary current (see below).
2. Set the breakpoints in each relay individually in accordance with the local CT ratio and the CT TAP setting. Next, adjust the differential pickup setting according to the terminal CT ratios. The slope value must be identical at all terminals.

Consider a two-terminal configuration with the following CT ratios for relays 1 and 2.

$$\begin{aligned} CT_{ratio}(\text{relay } 1) &= 1000/5 \\ CT_{ratio}(\text{relay } 2) &= 2000/5 \end{aligned}$$

Eq. 8-4

Consequently, we have the following CT tap value for relays 1 and 2.

$$\begin{aligned} CT_{tap}(\text{relay } 1) &= 2.0 \\ CT_{tap}(\text{relay } 2) &= 0.5 \end{aligned}$$

Eq. 8-5

To achieve maximum differential sensitivity, the minimum pickup is set as 0.2 pu at the terminal with the higher CT primary current; in this case 2000:5 for relay 2. The other terminal pickup is adjusted accordingly. The pickup values are set as follows:

$$\begin{aligned} \text{Pickup}(\text{relay } 1) &= 0.4 \\ \text{Pickup}(\text{relay } 2) &= 0.2 \end{aligned}$$

Eq. 8-6

Choosing relay 1 as a reference with a breakpoint of 5.0, the break point at relay 2 is chosen as follows:

$$\begin{aligned} \text{Breakpoint}(\text{relay } 2) &= \text{Breakpoint}(\text{relay } 1) \times \frac{CT_{ratio}(\text{relay } 1)}{CT_{ratio}(\text{relay } 2)} \\ &= 5.0 \times \frac{1000/5}{2000/5} = 2.5 \end{aligned}$$

Eq. 8-7

Use the following equality the verify the calculated breakpoint:

$$\text{Breakpoint}(\text{relay } 1) \times CT_{ratio}(\text{relay } 1) = \text{Breakpoint}(\text{relay } 2) \times CT_{ratio}(\text{relay } 2)$$

Eq. 8-8

Therefore, we have a breakpoint of 5.0 for relay 1 and 2.5 for relay 2.

Now, consider a three-terminal configuration with the following CT ratios for relays 1, 2, and 3.

$$\begin{aligned} CT_{ratio}(\text{relay } 1) &= 1000/5 \\ CT_{ratio}(\text{relay } 2) &= 2000/5 \\ CT_{ratio}(\text{relay } 3) &= 500/5 \end{aligned}$$

Eq. 8-9

Consequently, we have the following CT tap value for relays 1, 2, and 3.

$$\begin{aligned} CT_{tap1}(\text{relay } 1) &= 2.00 & CT_{tap2}(\text{relay } 1) &= 0.50 \\ CT_{tap1}(\text{relay } 2) &= 0.50 & CT_{tap2}(\text{relay } 2) &= 0.25 \\ CT_{tap1}(\text{relay } 3) &= 2.00 & CT_{tap2}(\text{relay } 3) &= 4.00 \end{aligned}$$

Eq. 8-10

In this case, the relay channels communicate as follows:

- For relay 1, channel 1 communicates to relay 2 and channel 2 communicates to relay 3
- For relay 2, channel 1 communicates to relay 1 and channel 2 communicates to relay 3

- For relay 3, channel 1 communicates to relay 1 and channel 2 communicates to relay 2

Consequently, to achieve the maximum sensitivity of 0.2 pu at the terminal with a CT ratio of 2000/5 (400 amps line primary differential current), the following pickup values are chosen:

$$\begin{aligned} \text{Pickup(relay 1)} &= 0.4 \\ \text{Pickup(relay 2)} &= 0.2 \\ \text{Pickup(relay 3)} &= 0.8 \end{aligned}$$

Eq. 8-11

Choosing relay as a reference with a breakpoint value of 5.0 pu, breakpoints for relays 2 and 3 are calculated as follows:

$$\begin{aligned} \text{Breakpoint(relay 2)} &= \text{Breakpoint(relay 1)} \times \frac{\text{CT}_{\text{ratio}}\text{(relay 1)}}{\text{CT}_{\text{ratio}}\text{(relay 2)}} \\ &= 5.0 \times \frac{1000/5}{2000/5} = 2.5 \end{aligned}$$

Eq. 8-12

$$\begin{aligned} \text{Breakpoint(relay 3)} &= \text{Breakpoint(relay 1)} \times \frac{\text{CT}_{\text{ratio}}\text{(relay 1)}}{\text{CT}_{\text{ratio}}\text{(relay 3)}} \\ &= 5.0 \times \frac{1000/5}{500/5} = 10.0 \end{aligned}$$

Eq. 8-13

To verify the calculated values, we have:

$$\begin{aligned} \text{Breakpoint(relay 1)} \times \text{CT}_{\text{ratio}}\text{(relay 1)} &= 5.0 \times 1000/5 = 1000 \\ \text{Breakpoint(relay 2)} \times \text{CT}_{\text{ratio}}\text{(relay 2)} &= 2.5 \times 2000/5 = 1000 \\ \text{Breakpoint(relay 3)} \times \text{CT}_{\text{ratio}}\text{(relay 3)} &= 10.0 \times 5000/5 = 1000 \end{aligned}$$

Eq. 8-14

This satisfies the equality condition indicated earlier.

During on-load tests, the differential current at all terminals should be the same and generally equal to the charging current if the tap and CT ratio settings are chosen correctly.

NOTE

Apply different CT ratios with care because an external fault current can cause different CT performance, especially when CTs at opposite ends of the line can saturate asymmetrically. A large difference in CT ratios, resulting in high CT TAP settings is recommended to be validated for a given application using the "L90 CT Saturation Analysis" tool from the GE Multilin website. Download, and extract the files, enter CT parameters in the spreadsheet, and click the **Analyze** button to obtain CT saturation analysis.

8.2.7 Breaker-and-a-half

Assume a breaker-and-the-half configuration shown in the following figure. This section provides guidance on configuring the L90 relay for this application. The L90 is equipped with two CT/VT modules: F8F and L8F.

1. CTs and VTs are connected to L90 CT/VT modules as follows:
   - CT1 circuitry is connected to the F1 to F3 terminals of the F8F module (three-phase CT inputs, CT bank "F").
   - CT2 circuitry is connected to the F1 to F3 terminals of the L8F module (three-phase CT inputs, CT bank "L").
   - VT1 circuitry is connected to the F8 terminals of the F8F module (single-phase VT for synchrocheck 1, VT bank "F").
   - VT2 circuitry is connected to the F8 terminals of the L8F module (single-phase VT for synchrocheck 2, VT bank "L").
   - VT3 circuitry is connected to the F5 to F7 terminals of the F8F modules (three-phase VT for distance, metering, synchrocheck, charging current compensation, etc.; VT bank "F").

Figure 8-4: Breaker-and-a-half application

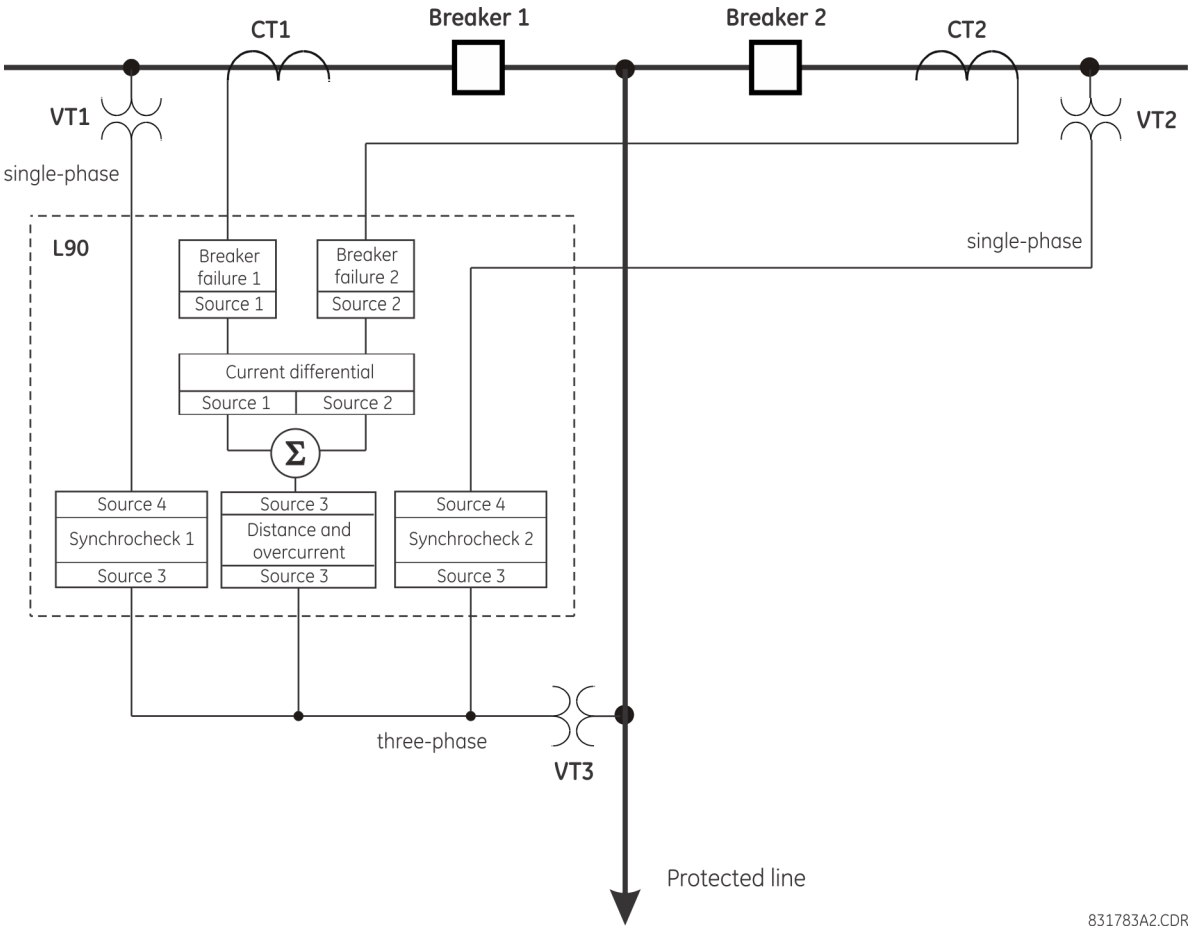

2. The CTs and VTs are configured according to the following ratios and connections (EnerVista UR Setup example shown).

Current // L90_500.urs : C:\Documents and Settings\All Users...

Save | Restore | Default | Reset | VIEW ALL mode

PARAMETER	CT F1	CT L1
Phase CT Primary	400 A	400 A
Phase CT Secondary	1 A	1 A
Ground CT Primary	1 A	1 A
Ground CT Secondary	1 A	1 A

L90_500.urs | System Setup: AC Inputs

Voltage // L90_500.urs : C:\Documents and Settings\All Users...

Save | Restore | Default | Reset | VIEW ALL mode

PARAMETER	VT F5	VT L5
Phase VT Connection	Wye	Wye
Phase VT Secondary	66.4 V	66.4 V
Phase VT Ratio	2000.00 :1	1.00 :1
Auxiliary VT Connection	Vag	Vag
Auxiliary VT Secondary	66.4 V	66.4 V
Auxiliary VT Ratio	2000.00 :1	2000.00 :1

L90_500.urs | System Setup: AC Inputs

3. The sources are configured as follows.

Source 1:

- First current source for current differential
- Voltage source for charging current compensation
- Current source for breaker failure 1

Source 2:

- Second current source for current differential
- Current source for breaker failure 2
- Voltage source for synchrocheck 2

Source 3:

- Current source for distance, backup overcurrent
- Voltage source for distance
- Voltage source for synchrocheck 1 and 2

Source 4:

- Voltage source for synchrocheck 1

The EnerVista UR Setup configuration is as follows.

Signal Sources // L90_500.urs : C:\Documents and Settings\All Users\Documents\GE Power Management\URPC\D...

Save | Restore | Default | Reset | VIEW ALL mode

PARAMETER	SOURCE 1	SOURCE 2	SOURCE 3	SOURCE 4
Source 1 Name	SRC 1	SRC 2	Sum1&2	SRC 4
Phase CT	F1	L1	F1+L1	None
Ground CT	None	None	None	None
Phase VT	F5	None	F5	None
Aux VT	None	L5	None	F5

L90_500.urs | System Setup

4. Sources are assigned accordingly in the specific element menus. For current differential, set **CURRENT DIFF SIGNAL SOURCE 1** to “SRC 1” and **CURRENT DIFF SIGNAL SOURCE 2** to “SRC 2.”

   For distance and backup overcurrent, make the following settings changes.

Distance // L90_500.urs : C:\Documents and Se...

Save | Restore | Default | Reset

SETTING	PARAMETER
Source	Sum1&2 (SRC 3)
Memory Duration	10 cycles
Force Self-Polar	OFF
Force Mem-Polar	OFF

L90_500.urs | Grouped Elements: Group 1: Distance

Phase TOC // L90_500.urs : C:\Documents and ...

Save | Restore | Default | Reset

PARAMETER	PHASE TOC1
Function	Enabled
Signal Source	Sum1&2 (SRC 3)
Input	Phasor
Pickup	1.000 pu
Curve	IEEE Mod Inv
TD Multiplier	1.00
Reset	Instantaneous
Voltage Restraint	Disabled
Block A	OFF
Block B	OFF
Block C	OFF
Target	Self-reset
Events	Disabled

L90_500.urs | Grouped Elements: Group 1: Phase Current

For breaker failure 1 and 2, make the following settings changes.

Breaker Failure // L90_500.urs : C:\Documents and Settings\All Users\Documents\GE ...

Save Restore Default Reset VIEW ALL mode

PARAMETER	BF1	BF2
Function	Enabled	Enabled
Mode	3-Pole	3-Pole
Source	SRC 1 (SRC 1)	SRC 2 (SRC 2)
Current Supervision	Yes	Yes
Use Seal-In	Yes	Yes
Three Pole Initiate	OFF	OFF
Block	OFF	OFF
Phase Current Supv Pickup	1.050 pu	1.050 pu
Neutral Current Supv Pickup	1.050 pu	1.050 pu
Use Timer 1	Yes	Yes
Timer 1 Pickup Delay	0.000 s	0.000 s
Use Timer 2	Yes	Yes
Timer 2 Pickup Delay	0.000 s	0.000 s
Use Timer 3	Yes	Yes
Timer 3 Pickup Delay	0.000 s	0.000 s
Breaker Pos1 Phase A/3P	OFF	OFF
Breaker Pos2 Phase A/3P	OFF	OFF
Breaker Test On	OFF	OFF
Phase Current HiSet Pickup	1.050 pu	1.050 pu
Neutral Current HiSet Pickup	1.050 pu	1.050 pu
Phase Current LoSet Pickup	1.050 pu	1.050 pu
Neutral Current LoSet Pickup	1.050 pu	1.050 pu
LoSet Time Delay	0.000 s	0.000 s
Trip Dropout Delay	0.000 s	0.000 s
Target	Self-reset	Self-reset
Events	Disabled	Disabled
Phase A Initiate	OFF	OFF
Phase B Initiate	OFF	OFF
Phase C Initiate	OFF	OFF
Breaker Pos1 Phase B	OFF	OFF
Breaker Pos1 Phase C	OFF	OFF
Breaker Pos2 Phase B	OFF	OFF
Breaker Pos2 Phase C	OFF	OFF

L90_500.urs Grouped Elements: Group 1

For synchrocheck 1 and 2, make the following settings changes.

Synchrocheck // L90_500.urs : C:\Documents and Settings\All Users\Documents\GE ...

Save Restore Default Reset VIEW ALL mode

PARAMETER	SYNCHROCHECK1	SYNCHROCHECK2
Function	Enabled	Enabled
Block	OFF	OFF
V1 Source	SRC 4 (SRC 4)	SRC 2 (SRC 2)
V2 Source	Sum1&2 (SRC 3)	Sum1&2 (SRC 3)
Max Volt Diff	10000 V	10000 V
Max Angle Diff	30 deg	30 deg
Max Freq Diff	1.00 Hz	1.00 Hz
Freq Hysteresis	0.06 Hz	0.06 Hz
Dead Source Select	LV1 and DV2	LV1 and DV2
Dead V1 Max Volt	0.30 pu	0.30 pu
Dead V2 Max Volt	0.30 pu	0.30 pu
Live V1 Min Volt	0.70 pu	0.70 pu
Live V2 Min Volt	0.70 pu	0.70 pu
Target	Self-reset	Self-reset
Events	Disabled	Disabled

L90_500.urs Control Elements

8.2.8 Distributed bus protection

In some cases, buses of the same substation are located far from each other or even separated by the line. In these cases, it is challenging to apply conventional bus protection because of the CT cable length. In other cases, there are no CTs available on the line side of the line to be protected. Taking full advantage of L90 capability to support up to four CTs connected directly, the relay can be applied to protect both line and buses as shown in the figure. Proper CT/VT modules must be ordered for such applications. The varying CT ratios at the breakers can be compensated locally by using the sources mechanism and with the CT TAP settings between remote relays. If more than four but less than eight CTs are to be connected to the L90 at one bus, the three-terminal system can be applied, provided that the user does not exceed a total of 12 CTs.

Figure 8-5: Distributed bus protection

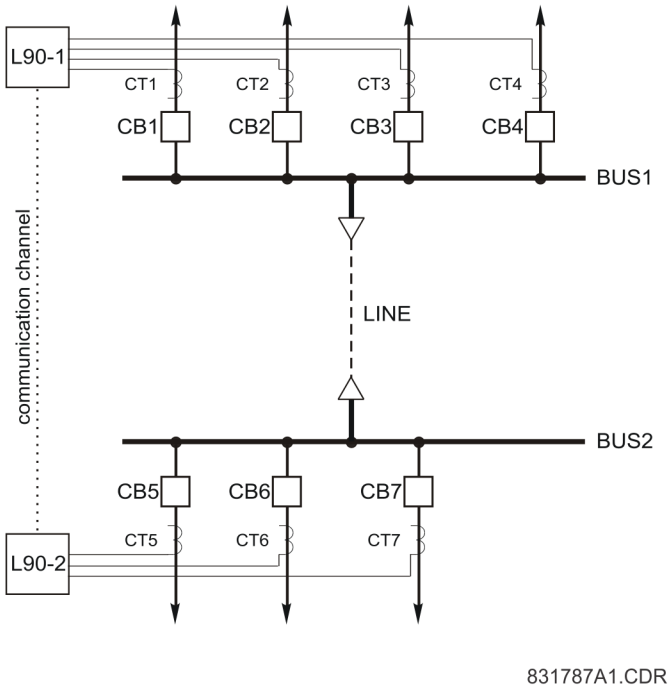

8.3 Channel asymmetry compensation using GPS

8.3.1 Introduction

As indicated in the Settings chapter, the L90 provides three basic methods of applying channel asymmetry compensation using GPS. Channel asymmetry can also be monitored with actual values and an indication signalled (FlexLogic operands 87L DIFF 1(2) MAX ASYM asserted) if channel asymmetry exceeds preset values. Depending on the implemented relaying philosophy, the relay can be programmed to perform the following on the loss of the GPS signal:

- Enable GPS compensation on the loss of the GPS signal at any terminal and continue to operate the 87L element (using the memorized value of the last asymmetry) until a change in the channel round-trip delay is detected.
- Enable GPS compensation on the loss of the GPS signal at any terminal and block the 87L element after a specified time.
- Continuously operate the 87L element but only enable GPS compensation when valid GPS signals are available. This provides less sensitive protection on the loss of the GPS signal at any terminal and runs with higher pickup and restraint settings.

8.3.2 Compensation method 1

Enable GPS compensation on the loss of the GPS signal at any terminal and continue to operate the 87L element until a change in the channel round-trip delay is detected.

If GPS is enabled at all terminals and the GPS signal is present, the L90 compensates for the channel asymmetry. On the loss of the GPS signal, the L90 stores the last measured value of the channel asymmetry per channel and compensates for the asymmetry until the GPS clock is available. However, if the channel was switched to another physical path during GPS loss conditions, the 87L element must be blocked, since the channel asymmetry cannot be measured and system is no longer accurately synchronized. The value of the step change in the channel is preset in the L90 **POWER SYSTEM** settings menu and signaled by the 87L DIFF 1(2) TIME CHNG FlexLogic operand. To implement this method, use the following steps:

1. Enable channel asymmetry compensation (**CHNL ASYM COMP**) by setting it to ON. Assign the GPS receiver failsafe alarm contact with the **BLOCK GPS TIME REF** setting.

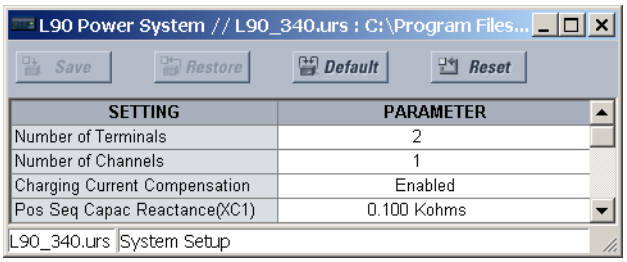

2. Create FlexLogic similar to that shown as follows to block the 87L element on GPS loss if step change in the channel delay occurs during GPS loss conditions or on a startup before the GPS signal is valid. For three-terminal systems, the 87L DIFF 1 TIME CHNG operand must be ORed with the 87L DIFF 2 TIME CHNG FlexLogic operand. The Block 87L (VO1) output is reset if the GPS signal is restored and the 87L element is ready to operate.

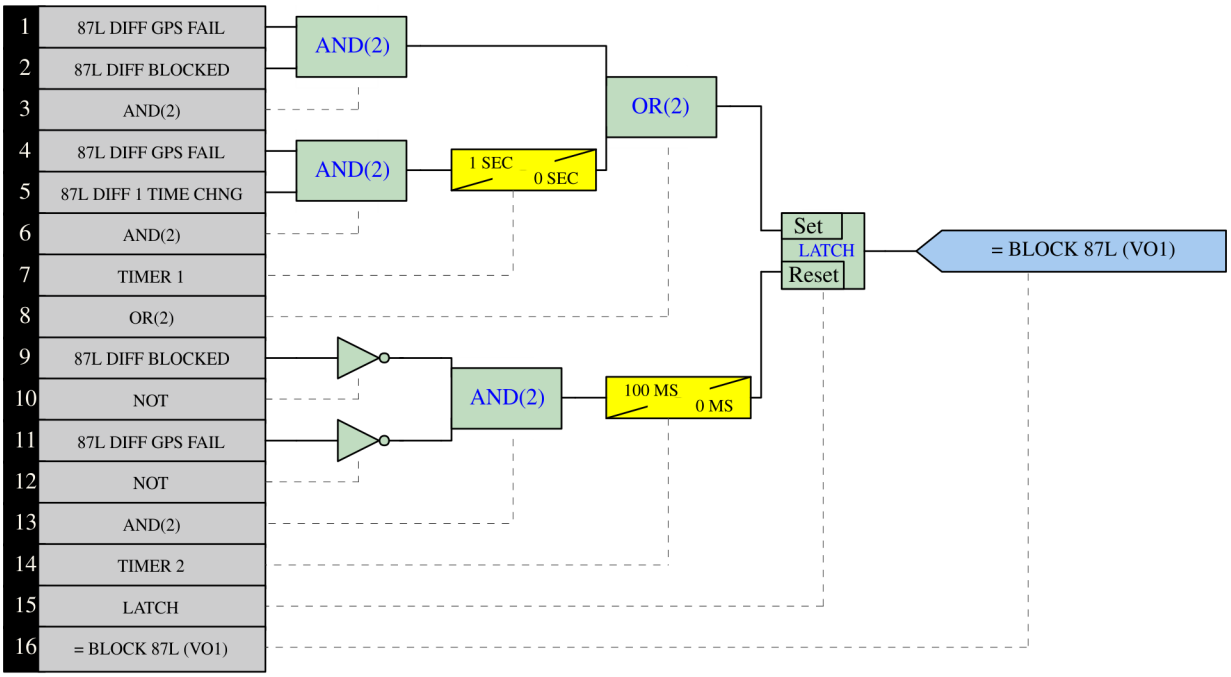

3. Assign virtual output BLOCK 87L (VO1) to the 87L Current Differential Block setting (**SETTINGS ⇨⇩ GROUPED ELEMENTS ⇨ SETTING GROUP ⇨ LINE DIFFERENTIAL... ⇨ CURRENT DIFFERENTIAL ⇨⇩ CURRENT DIFF BLOCK**). It can be used to enable backup protection, raise an alarm, and perform other functions as per the given protection philosophy.

8.3.3 Compensation method 2

Enable GPS compensation on the loss of the GPS signal at any terminal and block the 87L element after a specified time.

This is a simple and conservative way of using the GPS feature. Follow steps 1 and 3 in compensation method 1. The FlexLogic is simple: 87L DIFF GPS FAIL-Timer-Virtual Output Block 87L (VO1). It is recommended that the timer be set no higher than 10 seconds.

8.3.4 Compensation method 3

Continuously operate the 87L element but enable GPS compensation only when valid GPS signals are available. This provides less sensitive protection on GPS signal loss at any terminal and runs with higher pickup and restraint settings.

This approach can be used carefully if maximum channel asymmetry is known and does not exceed certain values (2.0 to 2.5 ms). The 87L DIFF MAX ASYM operand can be used to monitor and signal maximum channel asymmetry. Essentially, the L90 switches to another setting group with higher pickup and restraint settings, sacrificing sensitivity to keep the 87L function operational.

1. Create FlexLogic similar to that shown as follows to switch the 87L element to Settings Group 2 (with most sensitive settings) if the L90 has a valid GPS time reference. If a GPS or 87L communications failure occurs, the L90 switches back to Settings Group 1 with less sensitive settings.

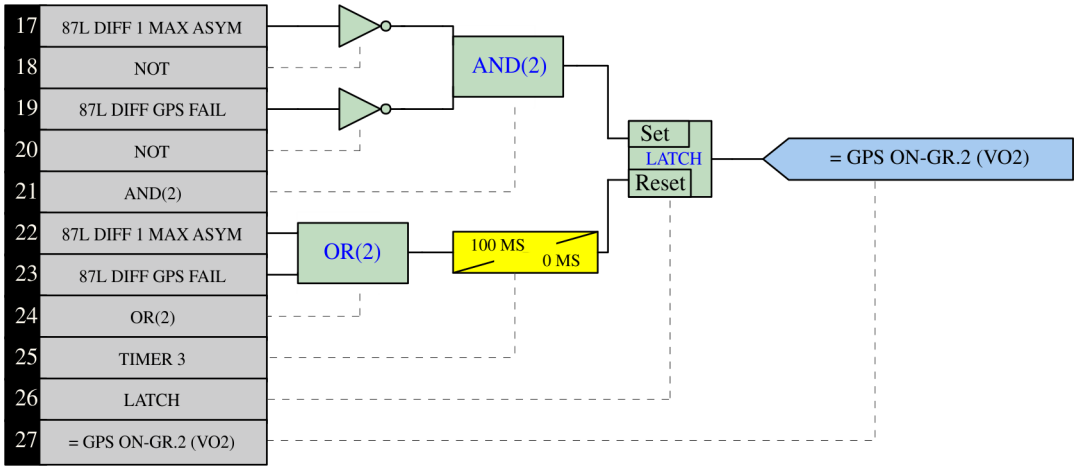

2. Set the 87L element with different differential settings for Settings Groups 1 and 2 shown as follows.

Current Differential // L90_340.urs : C:\Program...

Save | Restore | Default | Reset

SETTING	PARAMETER
Function	Enabled
Signal Source	SRC 1 (SRC 1)
Block	OFF
Pickup	0.50 pu
CT Tap 1	1.00
Restraint 1	40 %
Restraint 2	70 %
Breakpoint	1.0 pu
DTT	Enabled
Key DTT	OFF
Target	Latched
Events	Disabled

L90_340.urs | Grouped Elements: Group 1: Line Differential Elements

Current Differential // L90_340.urs : C:\Program...

Save | Restore | Default | Reset

SETTING	PARAMETER
Function	Enabled
Signal Source	SRC 1 (SRC 1)
Block	OFF
Pickup	0.20 pu
CT Tap 1	1.00
Restraint 1	20 %
Restraint 2	40 %
Breakpoint	1.0 pu
DTT	Enabled
Key DTT	OFF
Target	Latched
Events	Disabled

L90_340.urs | Grouped Elements: Group 2: Line Differential Elements

3. Enable GPS compensation when the GPS signal is valid and switch to Settings Group 2 (with more sensitive settings), shown as follows.

Setting Groups // L90_340.urs : C:\Program File...

Save | Restore | Default | Reset

SETTING	PARAMETER
Function	Enabled
Block	OFF
Group 2 Activate On	GPS ON-Gr.2 On (VO2)
Group 3 Activate On	OFF
Group 4 Activate On	OFF
Group 5 Activate On	OFF
Group 6 Activate On	OFF
Events	Disabled

L90_340.urs | Control Elements

L90 Power System // L90_340.urs : C:\Program Files...

Save | Restore | Default | Reset

SETTING	PARAMETER
Chan Asymmetry Comp	GPS ON-Gr.2 On (VO2)
Block GPS Time Ref	GPS failsafe On(H5a)
Max Chan Asymmetry	1.5 ms
Round Trip Time Change	1.5 ms

L90_340.urs | System Setup

8.4 Distance backup/supervision

8.4.1 Overview

As an economical approach to supply customer load, many high voltage (HV) lines have transformers tapped to the lines. The figure shows a typical configuration.

Figure 8-6: Typical high-voltage line configuration

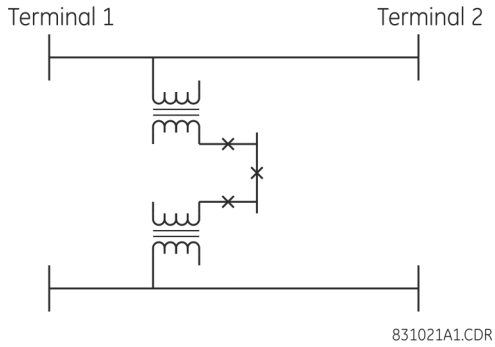

Two distinct approaches are available (Distance Backup and Distance Supervision), depending on which concerns are dominant. In either case, the distance function can provide a definite time backup feature to give a timed clearance for a failure of the L90 communications. Additionally, a Permissive Over-reaching Transfer Trip (POTT) scheme can be selected and activated after detection of an L90 communications failure, if an alternate lower bandwidth communications channel is available.

If **Distance Backup** is employed, dependability concerns usually relate to a failure of the communications. The distance elements can then effectively provide a means of fault identification and clearance. However, for a line with tapped transformers, a number of other issues need to be considered to ensure stability for the L90.

Any differential scheme has a potential problem when a low-voltage (LV) fault occurs at the tapped transformer location, and the current at the tap is not measured. Because the transformer size can become quite large, the required increase in the differential setting to avoid operation for the LV bus fault can result in a loss of sensitivity.

If the tapped transformer is a source of zero sequence infeed, then the L90 zero-sequence current removal has to be enabled as described in the next section.

The zero sequence infeed creates an apparent impedance setting issue for the backup ground distance and the zero sequence compensation term is also not accurate, so that the positive sequence reach setting must be increased to compensate. The phase distance reach setting can also need to be increased to cope with a transfer across the two transformers, but this is dependent on the termination and configuration of the parallel line.

Three terminal line applications generally result in larger reach settings for the distance backup and require a calculation of the apparent impedance for a remote fault. Carry this out for each of the three terminals, as the calculated apparent impedance differs at each terminal.

Distance Supervision essentially offers a solution for the LV fault condition, but the differential setting must still be increased to avoid operation for an external L-g or L-L-g fault external ground fault. In addition, the distance element reach setting must still see all faults within the protected line and be less than the impedance for a LV bus fault.

The effective source impedance ratio (SIR) for the LV fault generally is not high, so that CVT transients do not contribute to measuring errors.

If the distance supervision can be set to avoid operation for a transformer LV fault, then generally the filtering associated with the distance measuring algorithm ensures no operation under magnetizing inrush conditions. The distance element can be safely set up to $2.5 \times V_{nom} / I_{peak}$, where V_{nom} is the system nominal voltage and I_{peak} is the peak value of the magnetizing inrush current.

For applications where the tapped station is close to one terminal, then it can be difficult to set the distance supervision to reach the end of the line, and at the same time avoid operation for an LV fault. For this system configuration, use a three-terminal L90; the third terminal is then fed from CT on the high side of the tapped transformer.

8.4.2 Phase distance

8.4.2.1 Phase current supervision and the fuse failure element

The phase-to-phase (delta) current is used to supervise the phase distance elements, primarily to ensure that in a de-energized state the distance elements are not picked up due to noise or induced voltages on the line.

This supervision feature can also be employed to prevent operation under fuse failure conditions. This requires that the setting be above maximum load current and less than the minimum fault conditions for which operation is expected. This potential problem can be avoided by the use of a separate fuse fail function, which means that the phase current supervision can be set much lower, typically two times the capacitance charging current of the line.

The usage of the fuse fail function is also important during double-contingency events, such as an external fault during fuse fail conditions. The current supervision alone does not prevent maloperation in such circumstances.

Keep in mind that the fuse failure element provided on the L90 needs some time to detect fuse fail conditions. This can create a race between the instantaneous zone 1 and the fuse failure element. Therefore, for maximum security, it is recommended to both set the current supervision above the maximum load current and use the fuse failure function. The current supervision prevents maloperation immediately after the fuse fail condition giving some time for the fuse failure

element to take over and block the distance elements permanently. This is of a secondary importance for time-delayed zones 2 and up as the fuse failure element has some extra time for guaranteed operation. The current supervision can be set below the maximum load current for the time delayed zones.

Blocking distance elements during fuse fail conditions are not be acceptable in some applications and/or under some protection philosophies. Applied solutions vary from not using the fuse failure element for blocking at all, to using it and modifying—through FlexLogic and multiple setting groups mechanisms—other protection functions or other relays to provide some protection after detecting fuse fail conditions and blocking the distance elements, and to using it and accepting the fact that the distance protection does not respond to subsequent internal faults until the problem is addressed.

NOTE

To be fully operational, the Fuse Failure element must be enabled, and its output FlexLogic operand must be indicated as the blocking signal for the selected protection elements.

For convenience, the current supervision threshold incorporates the $\sqrt{3}$ factor.

8.4.2.2 Phase distance zone 1

As typically used for direct tripping, the zone 1 reach must be chosen so that it does not extend beyond the far end(s) of the protected line. Zone 1 provides nominally instantaneous protection for any phase fault within a pre-determined distance from the relay location. To ensure that no overreach occurs typically requires a setting of 80 to 90% of the line length, which covers CT and VT errors, relay inaccuracy and transient overreach, as well as uncertainty in the line impedance for each phase, although transposition can minimize this latter concern.

The total relay inaccuracy, including both steady state and transient overreach even when supplied from CVTs under the source impedance ratios of up to 30, is below 5%.

8.4.2.3 Phase distance zone 2

Zone 2 is an overreaching element, which essentially covers the final 10 to 20% whole of the line length with a time delay. The additional function for zone 2 is as a timed backup for faults on the remote bus. Typically the reach is set to 125% of the positive-sequence impedance of the line, to ensure operation, with an adequate margin, for a fault at 100% of the line length. The necessary time delay must ensure that coordination is achieved with the clearance of a close-in fault on the next line section, including the breaker operating time.

The zone 2 time delay is typically set from 0.2 to 0.6 seconds, although this can have to be reviewed more carefully if a short line terminates on the remote bus, since the two zone 2 elements can overlap and therefore not coordinate in a satisfactory manner.

8.4.2.4 Phase distance zone 3

If a remote backup philosophy is followed, then the reach of this element must be set to account for any infeed at the remote bus, plus the impedance of the longest line which terminates on this remote bus. The time delay must coordinate with other time-delayed protections on any remote line. Circuit loading limitations created by a long zone reach can be overcome by using lens or quadrilateral characteristics and/or a load encroachment supervising characteristic. Consider also a situation where the load impedance can enter into the relay characteristic for a time longer than the chosen time delay, which can occur transiently during a system power swing. For this reason, use the power swing blocking function.

8.4.2.5 Phase distance zone 4

A further contribution to remote backup, the reach of this element must be set to account for any infeed at the remote bus. The time delay must coordinate with other time-delayed protections on the next line. The use of a lens characteristic or the load encroachment element is advantageous if load limits are a problem.

To avoid extremely large reach settings, the L90 has the ability to implement any element so that it is reverse looking, which then can provide a back up for the longest line terminated on the local bus. This strategy can be beneficial if the reduced reach helps discrimination between the load and fault conditions, but must be implemented at both ends of the protected line.

8.4.2.6 Phase distance zone 5

An additional fifth phase distance zone can be used in special applications. This zone can be the start zone for arming tripping from all other zones, in both forward and reverse directions of the of protected line. This zone can also be used as an additional reverse-looking zone for implementation of two reverse-looking zones, thus providing two zone backup reverse-looking protection. The fifth distance zone can be used as an alarm zone, indicating that load impedance is approaching the zone characteristic.

8.4.3 Ground distance

8.4.3.1 Neutral current supervision

The current supervision for the ground distance elements responds to an internally calculated neutral current (3 × I_0). Base the setting for this element on twice the zero-sequence line capacitance current or the maximum zero-sequence unbalance under maximum load conditions. Do not use this element to prevent an output when the load impedance is inside the distance characteristic on a steady state basis.

8.4.3.2 Ground distance zone 1

The zone 1 reach must be set so that nominally instantaneous operation does not extend beyond the end of the protected line. However this can be more complicated than for the phase elements, because of zero sequence mutual induction with an adjacent parallel line, possibly carried on the same tower, which can be out of service and grounded at multiple points. A fault beyond 100% of the protected line can cause overreach unless the reach is reduced significantly, sometimes as low as 65% of the line length. If the line being protected does not have a significant interaction with an adjacent circuit, then the typical 80% setting can be used. If there is significant mutual coupling between the parallel lines, then the mutual compensation feature of the ground distance elements can be used instead of a drastic reduction in the reach.

However, even in this case, there is more uncertainty compared with the phase distance elements because the zero-sequence impedance of the line and thus the zero-sequence-compensating factors can vary significantly due to weather and other conditions.

8.4.3.3 Ground distance zone 2

To ensure that zone 2 can see 100% of the line, inter-circuit mutual effects must be considered, as they can contribute to a significant under-reach. Typically this occurs on double circuit lines, when both lines carry the same current. Conduct an analytical study to determine the appropriate reach setting.

The main purpose of this element is to operate for faults beyond the reach of the local zone 1 element, and therefore a time delay must be used similar to the phase fault case.

8.4.3.4 Ground distance zone 3

This remote back up function must have a reach that is set to account for any infeed at the remote bus, plus the impedance of the longest line that terminates on this remote bus. Similar to the phase fault case, a zone 3 element must be time coordinated with timed clearances on the next section.

8.4.3.5 Ground distance zone 4

As a further contribution to a remote backup philosophy, the reach of this element must be set to account for any infeed at the remote bus. The time delay must coordinate with other time-delayed protections on the next line. The use of a lens characteristic or load encroachment element is advantageous when load limits are a problem. To avoid extremely large reach settings the L90 has the ability to implement any element, so that it is reverse looking. This strategy can be beneficial if the reduced reach enhances the discrimination between the load and fault conditions. When adopted, this approach must be implemented at both ends of the protected line.

8.4.3.6 Ground distance zone 5

An additional fifth ground distance zone can be used in special applications. This zone can be the start zone for arming tripping from all other zones, in both forward and reverse directions of the of protected line. This zone can also be used as an additional reverse-looking zone for implementation of two reverse-looking zones, thus providing two zone backup reverse-looking protection. The fifth distance zone can be used as an alarm zone, indicating that load impedance is approaching the zone characteristic.

8.5 Protection signaling schemes

8.5.1 Overview

The L90 includes the following common pilot-aided schemes:

- Direct under-reaching transfer trip (DUTT)
- Permissive under-reaching transfer trip (PUTT)
- Permissive over-reaching transfer trip (POTT)
- Hybrid permissive over-reaching transfer trip (Hybrid POTT)
- Directional comparison blocking
- Directional comparison unblocking

8.5.2 Direct under-reaching transfer trip (DUTT)

This scheme uses an under-reaching Zone 1 distance element to key a transfer trip signal to the remote end(s), where on receipt, the DUTT pilot scheme operates without any additional supervision.

For proper operation of the scheme the Zone 1 phase and ground distance elements must be enabled and configured per rules of distance relaying.

The scheme generates an output operand (DUTT TX) that is used to transmit the signal to the remote end. Choices of communications channel include Remote Inputs/Outputs and telecommunications interfaces. When used with telecommunications facilities, assign the output operand to operate an output contact connected to key the transmitter at the interface.

Note that the same protection signaling can be used by a breaker failure scheme, in which case the signal can be sealed in by breaker fail for a time longer than the auto-reclose “reclaim” time which then prevents auto-reclose when not required.

A provision for an optional seal-in of the send signal is made to cover those situations where Power Line Carrier (PLC) signaling is used and the signal must be transmitted in a potentially noisy situation due to the fault.

The scheme output operand (DUTT OP) must be configured to interface with other relay functions, output contacts in particular, in order to make the scheme fully operational. Typically, the output operand is programmed to initiate a trip, breaker fail, and auto-reclose, and to drive a user-programmable LED as per user application.

8.5.3 Permissive under-reaching transfer trip (PUTT)

This scheme uses an under-reaching Zone 1 distance element to key a transfer trip signal to the remote end where it is supervised by the over-reaching Zone 2 distance elements.

For proper operation of the scheme the Zone 1 and 2 phase and ground distance elements must be enabled and configured per rules of distance relaying.

The scheme generates an output operand (PUTT TX) that is used to transmit the signal to the remote end. Choices of communications channel include Remote Inputs/Outputs and telecommunications interfaces. When used with telecommunications facilities the output operand should be assigned to operate an output contact connected to key the transmitter at the interface.

The PUTT RX PICKUP DELAY timer can be used to ride through spurious PLC receive signals.

The scheme output operand (PUTT OP) must be configured to interface with other relay functions, output contacts in particular, in order to make the scheme fully operational. Typically, the output operand is programmed to initiate a trip, breaker fail, and auto-reclose, and to drive a user-programmable LED as per user application.

8.5.4 Permissive over-reaching transfer trip (POTT)

This scheme is intended for two-terminal line applications.

This scheme uses an over-reaching Zone 2 distance element to essentially compare the direction to a fault at both the ends of the line.

Ground directional overcurrent functions available in the relay can be used in conjunction with the Zone 2 distance element to key the scheme and initiate its operation. This provides increased coverage for high-resistance faults.

Good directional integrity is the key requirement for an over-reaching forward-looking protection element used to supplement Zone 2. Even though any FlexLogic operand can be used for this purpose, allowing the user to combine responses of various protection elements or to apply extra conditions through FlexLogic equations, this extra signal is primarily meant to be the output operand from either the Negative-Sequence Directional IOC or Neutral Directional IOC. Both of these elements have separate forward (FWD) and reverse (REV) output operands. Use the forward indication NEG SEQ DIR OC1 FWD or NEUTRAL DIR OC1 FWD).

An important consideration is when one of the line terminals is open. It is then necessary to identify this condition and arrange for a continuous sending of the permissive signal or use a slower but more secure echo feature to send a signal to the other terminal, which is producing the fault infeed. With any echo scheme however, a means must be provided to avoid a permanent lock up of the transmit/receive loop. The echo co-ordination (ECHO DURATION) and lock-out (ECHO LOCKOUT) timers perform this function by ensuring that the permissive signal is echoed once for a guaranteed duration of time before going to a lockout for a settable period of time.

Recognize that in ring bus or breaker and a half situations it can be the line disconnect or a combination of the disconnect and/or the breaker(s) status that is the indication that the terminal is open.

The **POTT RX PICKUP DELAY** timer is included in the permissive receive path to ride through spurious receive outputs that can be produced during external faults, when power line carrier is utilized as the communications medium.

No current reversal logic is included for the overreaching phase and ground distance elements, because long reaches are not usually required for two terminal lines. A situation can occur however, where the ground distance element has an extended reach. This situation is encountered when it is desired to account for the zero sequence inter-circuit mutual coupling. This is not a problem for the ground distance elements in the L90 that do have a current reversal logic built into their design as part of the technique used to improve ground fault directionality.

Unlike the distance protection elements, the ground directional overcurrent functions do not have their reach well defined, therefore the current reversal logic is incorporated for the extra signal supplementing Zone 2 in the scheme. The transient blocking approach for this POTT scheme is to recognize that a permissive signal has been received and then allow a settable time **TRANS BLOCK PICKUP DELAY** for the local forward looking directional element to pick up.

The scheme generates an output operand (POTT TX) that is used to transmit the signal to the remote end. Choices of communications channel include Remote Inputs/Outputs and telecommunications interfaces. When used with telecommunications facilities the output operand is assigned to operate an output contact connected to key the transmitter at the interface. Power Line Carrier (PLC) channels are not recommended for this scheme since the PLC signal can be interrupted by a fault.

For proper operation of the scheme the Zone 2 phase and ground distance elements must be enabled and configured per rules of distance relaying. The Line Pickup element needs to be enabled and configured properly to detect line-end-open/weak-infeed conditions.

If used by this scheme, the selected ground directional overcurrent function(s) must be enabled and configured accordingly The output operand from the scheme (POTT OP) must be configured to interface with other relay functions, output contacts in particular, in order to make the scheme fully operational. Typically, the output operand is programmed to initiate a trip, breaker fail, and auto-reclose, and to drive a user-programmable LED as per user application.

8.5.5 Hybrid POTT scheme (HYB-POTT)

This scheme uses an over-reaching Zone 2 distance element to compare the direction to a fault at both ends of the line. Ground directional overcurrent functions available in the relay can be used in conjunction with the Zone 2 distance element to key the scheme and initiate its operation. This increases the coverage for high-resistance faults.

The scheme is intended for three-terminal applications and for weak-infeed conditions. As a long reach of the overreaching distance element can be required for three-terminal applications, transient blocking logic is provided for both distance and ground directional overcurrent elements. In order to cope with weak-infeed conditions, an echo feature is made available.

By default, the scheme uses the reverse-looking Zone 4 distance element to identify reverse faults. Additionally, reverse-looking ground directional overcurrent functions can be used in conjunction with Zone 4.

For proper operation of the scheme the Zone 2 and 4 phase and ground distance elements must be enabled and configured per rules of distance relaying. The Line Pickup element needs to be enabled and configured properly to detect line-end-open/weak-infeed and undervoltage conditions.

If used by this scheme, the selected ground directional overcurrent function(s) must be enabled and configured accordingly.

The scheme generates an output operand (HYBRID POTT TX) that is used to transmit the signal to the remote end. Choices of communications channel include Remote Inputs/Outputs and telecommunications interfaces. When used with telecommunications facilities, assign the output operand to operate an output contact connected to key the transmitter at the interface.

For more application recommendation, see the POTT scheme.

The output operand from the scheme (HYBRID POTT OP) must be configured to interface with other relay functions, output contacts in particular, in order to make the scheme fully operational. Typically, the output operand is programmed to initiate a trip, breaker fail, and auto-reclose, and to drive a user-programmable LED as per user application.

8.5.6 Directional comparison blocking

The scheme compares the direction to a fault at both ends of the line. Unlike the permissive schemes, the absence of a blocking signal permits operation of the scheme. Consequently, the scheme is biased toward dependability and requires an “on/off” type of signaling.

By default, this scheme uses only a forward-looking over-reaching Zone 2 distance element to identify forward faults. Ground directional overcurrent functions available in the relay can be used in conjunction with the Zone 2 distance element to increase the coverage for high-resistance faults.

By default, the scheme uses only a reverse-looking Zone 4 distance element to identify reverse faults. Ground directional overcurrent functions available in the relay can be used in conjunction with the Zone 4 distance element for better time and sensitivity coordination.

For proper operation of the scheme, the Zone 2 and 4 phase and ground distance elements must be enabled and configured per rules of distance relaying.

If used by this scheme, the selected ground directional overcurrent function(s) must be enabled and configured accordingly.

The scheme generates output operands (BLOCKING SCHEME TX INIT and BLOCKING SCHEME TX STOP) that are used control the transmission of signals to the remote end. Choices of communications channel include Remote Inputs/Outputs and telecommunications interfaces. When used with telecommunications facilities, assign the output operand to operate an output contact connected to key the transmitter at the interface.

A blocking scheme can be preferred over a Hybrid POTT scheme, because of shorter reach settings for the Zone 2 elements. This follows from the fundamental difference that all zone 2 elements are required to see an internal fault for the POTT approach, under all system conditions, which in turn, means that the reversed Zone 4 block initiate elements must also have an increased reach. A blocking scheme on the other hand, can have much shorter Zone 2 reach settings if sequential clearance can be accepted. The simple rule to ensure that all faults can be cleared, is for each terminal to have a reach setting equal to the distance to the tap plus twice the distance from the tap to the remote terminal.

The Zone 2 element must have a coordinating timer **BLOCK RX CO-ORD PKP DELAY**, to ensure that the blocking signal is received for all external faults that are within the set reach of the local overreaching Zone 2.

Transient blocking logic is implemented via the **TRANS BLOCK** timer, which continues to send a blocking signal for a settable time **TRANS BLOCK RESET DELAY**, if it was being sent for at least 30 ms during the initial reverse fault set via **TRANS BLOCK PICKUP DELAY**.

The output operand from the scheme (BLOCKING SCHEME OP) must be configured to interface with other relay functions, output contacts in particular, in order to make the scheme fully operational. Typically, the output operand is programmed to initiate a trip, breaker fail, and auto-reclose, and to drive a user-programmable LED as per user application.

8.5.7 Directional comparison unblocking

8.5.7.1 Overview

The directional comparison unblocking scheme is used with a frequency shift keying (FSK) PLC that produces a loss-of-guard output during an actual loss-of-guard signal condition and during reception of the permissive keyed frequency when the received carrier signal changed from guard to permissive frequency. The loss-of-guard signal is preferably a normally-closed contact, allowing the scheme to get this signal if the communications equipment failed. This loss-of-guard output is connected to a contact input of the L90. The power line carrier also provides an output contact when the permissive frequency is received. This output is wired to any other contact input of the L90.

The directional comparison unblocking scheme allows a window of opportunity for tripping the breaker fast if the permissive signal gets attenuated by the fault to a level below the receiver's threshold. The guard signal is monitored, and the relay is allowed to trip for a loss of guard without receipt of the permissive signal, if the relay sees the fault in the forward, and not reverse direction by means of the forward looking distance zone 2 and ground directional forward, if configured, and reverse looking distance zone 4 and ground directional reverse, if configured.

The scheme is active and ready for operation when the **DCUB BLOCK** setting is “Off” the **DCUB SCHEME FUNCTION** setting is “Enabled”. The user can disable or block the scheme by assigning any FlexLogic operand to the **DCUB BLOCK** setting. This operand can consist of any pre-defined logic, including a pilot cutout switch connected to any contact input of the L90. With this pilot cutout switch and the pre-defined logic state on and assigned to **DCUB BLOCK**, the scheme is disabled. The directional comparison unblocking scheme supervises the operation and keying of all scheme functions. The lockout feature of the scheme also supervises all scheme functions. All timers are fully adjustable, with typical values indicated.

Lockout of the directional comparison unblocking scheme is established as follows. Lockout of the scheme is started for a time duration set by **DCUB LOG TRIP WINDOW** setting if:

- The scheme is enabled and not blocked (that is, the scheme is active), and
- no permissive RX signal is received, and
- any loss-of-guard signal is received

Lockout is sealed-in through an AND gate with the directional comparison unblocking scheme active and any loss-of-guard through **GUARD HEALTHY RESET DELAY** timer. The scheme thus remains blocked during longer loss-of-guard or channel conditions for any of the configured channels. The **GUARD HEALTHY RESET DELAY** timer ensures that the scheme remains locked out slightly longer after the loss-of-guard signal(s) is reset. This allows for all channel(s) stabilizing and contact denouncing. This timer determines how long the logic waits before enabling the directional comparison unblocking scheme when the communications channel is restored.

Operating of the directional comparison unblocking scheme consists of two parts: normal operation and loss-of-guard operation.

8.5.7.2 Normal operation

Normal operation picks up under the following conditions:

- The scheme is enabled (**DCUB FUNCTION** is “Enabled” and **DCUB BLOCK** is “Off”), and
- any permissive signal is received with its associated loss-of-guard signal (for example, DCUB RX1 and DCUB LOG1), and
- a fault is seen in the forward zone 2 distance elements or ground directional forward function (if configured), and
- the reverse zone 4 distance elements or ground directional reverse function (if configured) did not pickup to set the transient blocking, and

- the scheme is not locked out

If these conditions are met, the trip table is run, operating the scheme and asserting the DCUB OP FlexLogic operand. The trip table with the aid of the local phase selector and received RX signals determine what tripping operands are operated. During normal operation, the loss-of-guard signal is seen momentarily before the permissive DCUB RX signal is received for each channel being operated, as the channel transitions from guard to permissive frequency, but the scheme operates instantaneously after any DCUB RX signal is received.

8.5.7.3 Loss-of-guard operation

The loss-of-guard operation picks up under the following conditions:

- The scheme is enabled (**DCUB FUNCTION** is "Enabled" and **DCUB BLOCK** is "Off"), and
- any loss-of-guard signal is received without its associated RX signal, and
- a fault is seen in the forward zone 2 distance elements or ground directional forward function (if configured), and
- the reverse zone 4 distance elements or ground directional reverse function (if configured) did not pickup to set the transient blocking.

If these conditions are met, then the **DCUB LOG PICKUP DELAY** timer is started. After this timer times out, the trip table is run, operating the scheme and asserting the DCUB OP FlexLogic operand. The trip table with the aid of the local phase selector and loss-of-guard signals determines what tripping operands are operated. The **DCUB LOG PICKUP DELAY** timer allows for any and all channel(s) to transition from guard to permissive before operating due to loss-of-guard in the presence of a forward fault. The time window of allowing the scheme to operate when no DCUB RX signal is received when any loss-of-guard was received is the difference between the **DCUB LOG TRIP WINDOW** and **DCUB LOG PICKUP DELAY** timers. When using default settings, this value is 150 – 8 = 142 ms. This means the scheme is unblocked and can trip during this time window if a forward fault is sensed.

8.5.7.4 Keying of the carrier(s) under normal conditions

The keying signals, which allows the relay to key the permissive channel during normal permissive scheme operation by means of the DCUB TX1 through DCUB TX4 signals, are established as follows:

- The scheme is enabled (**DCUB FUNCTION** is "Enabled" and **DCUB BLOCK** is "Off"), and
- a fault is seen in the forward zone 2 distance elements or ground directional forward function (if configured), and
- the reverse zone 4 distance elements or ground directional reverse function (if configured) did not pickup to set the transient blocking.

If these conditions are met, then the scheme keys the channel(s) by means of asserting transmit signals DCUB TX1 through DCUB TX4 with the aid of the local phase selector or zone 2 distance elements.

8.5.7.5 Keying of the carrier during echo conditions

The echo signal, which allows the relay to key the permissive channel(s) through the DCUB TX1 through DCUB TX4 transmit operands during echo conditions when the local breaker opened, keys the carrier(s) during the following conditions:

- The scheme is enabled (**DCUB FUNCTION** is "Enabled" and **DCUB BLOCK** is "Off"), and
- the **DCUB PERMISSIVE ECHO** setting is "Enabled", and
- the LINE PICKUP LEO PKP operand that detects the local breaker to be open picks up for a time set by **LINE END OPEN PICKUP DELAY**, and
- any permissive signal DCUB RX1 through DCUB RX4 is received and any LOG1 to LOG4 is received, and
- a fault is not seen in the forward zone 2 distance elements or ground directional forward function (if configured) for at least 100 ms, and
- the reverse zone 4 distance elements or ground directional reverse function (if configured) did not pickup to set the transient blocking.

If these conditions are met, then the scheme echoes (transmits the DCUB TX1 through DCUB TX4 operands) the received permissive DCUB RX signal(s) back to the remote relay based on the echo table.

The keying or transmit signals DCUB TX1 through DCUB TX4 consist of all normal keying or echo keying conditions.

The scheme DCUB TRIP A, DCUB TRIB B, DCUB TRIP C, and DCUB TRIP 3P output operands are hard-wired to the trip output scheme. As such, if the trip output or breaker control operands (if the breaker control function is used) are used for tripping, the scheme is fully operational. The permissive key carrier signals DCUB TX1 through DCUB TX4 must still be assigned to the tripping/operating logic, and to output contacts as per the usual L90 logic/output assignments.

8.6 Series compensated lines

8.6.1 Distance settings

Traditionally, the reach setting of an underreaching distance function is set based on the net inductive impedance between the potential source of the relay and the far-end busbar, or location for which the zone must not overreach. Faults behind series capacitors on the protected and adjacent lines need to be considered for this purpose. For further illustration, a sample system shown in the figure is considered.

Figure 8-7: Sample series-compensated system

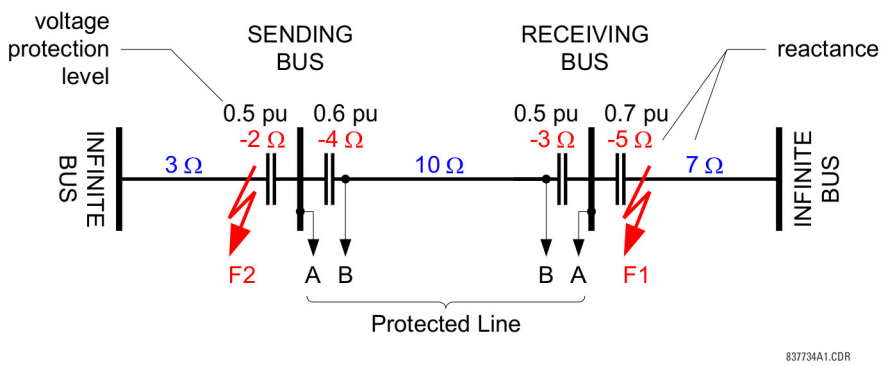

Assuming 20% security margin, the underreaching zone is set as follows.

At the Sending Bus, consider an external fault at F1 because the 5 Ω capacitor contributes to the overreaching effect. Any fault behind F1 is less severe as extra inductive line impedance increases the apparent impedance:

Reach Setting: 0.8 x (10 – 3 – 5) = 1.6 Ω if the line-side (B) VTs are used
Reach Setting: 0.8 x (10 – 4 – 3 – 5) = –1.6 Ω if the bus-side (A) VTs are used

The negative value means that an underreaching zone cannot be used as the circuit between the potential source of the relay and an external fault for which the relay must not pick-up, is overcompensated, for example capacitive.

At the Receiving Bus, consider a fault at F2:

Reach Setting: 0.8 x (10 – 4 – 2) = 3.2 Ω if the line-side (B) VTs are used
Reach Setting: 0.8 x (10 – 4 – 3 – 2) = 0.8 Ω if the bus-side (A) VTs are used

Practically, however, to cope with the effect of sub-synchronous oscillations, one can need to reduce the reach even more. As the characteristics of sub-synchronous oscillations are in complex relations with fault and system parameters, no solid setting recommendations are given with respect to extra security margin for sub-synchronous oscillations. It is strongly recommended to use a power system simulator to verify the reach settings or to use an adaptive L90 feature for dynamic reach control.

If the adaptive reach control feature is used, set the **PHS DIST Z1 VOLT LEVEL** setting accordingly.

This setting is a sum of the overvoltage protection levels for all the series capacitors located between the relay potential source and the far-end busbar, or location for which the zone must not overreach. The setting is entered in pu of the phase VT nominal voltage (RMS, not peak value).

If a minimum fault current level (phase current) is causing a voltage drop across a given capacitor that prompts its air gap to flash over or its MOV to carry practically all the current, then the series capacitor is excluded from the calculations (the capacitor is immediately by-passed by its overvoltage protection system and does not cause any overreach problems).

If a minimum fault current does not guarantee an immediate capacitor by-pass, then the capacitor must be included in the calculation: its overvoltage protection level, either air gap flash-over voltage or MOV knee-point voltage, is used (RMS, not peak value).

Assuming none of the series capacitors in the sample system is guaranteed to get by-passed, the following calculations apply.

For the Sending Bus:

0.5 + 0.7 = 1.2 pu if the line-side (B) VTs are used
0.6 + 0.5 + 0.7 = 1.8 pu if the bus-side (A) VTs are used

For the Receiving Bus:

0.6 + 0.5 = 1.1 pu if the line-side (B) VTs are used
0.6 + 0.5 + 0.5 = 1.6 pu if the bus-side (A) VTs are used

8.6.2 Ground directional overcurrent

Ground directional overcurrent function (negative-sequence or neutral) uses an offset impedance to guarantee correct fault direction discrimination. The following setting rules apply:

- If the net impedance between the potential source and the local equivalent system is inductive, then there is no need for an offset. Otherwise, the offset impedance shall be at least the net capacitive reactance.
- The offset cannot be higher than the net inductive reactance between the potential source and the remote equivalent system. For simplicity and extra security, the far-end busbar can be used rather than the remote equivalent system.

As the ground directional functions are meant to provide maximum fault resistance coverage, it is justified to assume that the fault current is very low and none of the series capacitors is guaranteed to get by-passed. Consider settings of the negative-sequence directional overcurrent protection element for the Sample Series Compensated System.

For the Sending Bus relay, bus-side VTs:

- Net inductive reactance from the relay into the local system = –2 + 3 = 1 Ω > 0; there is no need for offset
- Net inductive reactance from relay through far-end busbar = –4 + 10 – 3 = 3 Ω; the offset cannot be higher than 3 Ω
- It is recommended to use 1.5 Ω offset impedance

For the Sending Bus relay, line-side VTs:

- Net inductive reactance from relay into local system = –2 + 3 – 4 = –3 Ω < 0; an offset impedance ≥3 Ω must be used
- Net inductive reactance from relay through far-end busbar = 10 – 3 = 7 Ω; the offset cannot be higher than 7 Ω
- It is recommended to use 5 Ω offset impedance

For the Receiving Bus relay, bus-side VTs:

- Net inductive reactance from relay into local system = –5 + 7 = 2 Ω > 0; there is no need for offset
- Net inductive reactance from relay through far-end busbar = –3 + 10 – 4 = 3 Ω; the offset cannot be higher than 3 Ω
- It is recommended to use 1.5 Ω offset impedance

For the Receiving Bus relay, line-side VTs:

- Net inductive reactance from relay into local system = –3 – 5 + 7 = –1 Ω < 0; an offset impedance ≥1 Ω must be used
- Net inductive reactance from relay through far-end busbar = 10 – 4 = 6 Ω; the offset cannot be higher than 6 Ω
- It is recommended to use 3.5 Ω offset impedance

8.7 Lines with tapped transformers

8.7.1 Overview

The L90 protection system can be applied to lines with tapped transformer(s) even if the latter has its windings connected in a grounded wye on the line side and the transformer(s) currents are not measured by the L90 protection system. The following approach is recommended.

If the setting **SYSTEM SETUP ⇨⇩ L90 POWER SYSTEM ⇨⇩ ZERO-SEQ CURRENT REMOVAL** is "Enabled," all relays at the line terminals are calculating zero-sequence for both local and remote currents and are removing this current from the phase currents. This ensures that the differential current is immune to the zero-sequence current out-feed caused by the in-zone transformer with a primary wye-connected winding solidly grounded neutral.

At all terminals the following is being performed:

I_L_0 = (I_L_A + I_L_B + I_L_C) / 3) : local zero-sequence current

I_R_0 = (I_R_A + I_R_B + I_R_C) / 3 : remote zero-sequence current

Now, the I_PHASE – I_0 values (for Local and Remote) are being used instead of pure phase currents for differential and restraint current calculations.

For example, the operating current in phase A is determined as:

I^2op_A = |(I_L_A – I_L_0) + (I_R_A – I_R_0) $|^2$: squared operating current, phase A

where

I_L_A = "local" current phase A
I_R_A = "remote" current phase A
I_L_0 = local zero-sequence current
I_R_0 = remote zero-sequence current
I^2op_A = operating (differential) squared current phase A

The restraint current is calculated in a similar way.

NOTE When the **ZERO-SEQ CURRENT REMOVAL** feature is enabled, the modified (I_0 removed) differential current in all three phases is shown in the **ACTUAL VALUES ⇨⇩ METERING ⇨ 87L DIFFERENTIAL CURRENT** menu. Local and remote currents values are not changed.

8.7.2 Transformer load currents

As the tapped line can be energized from one terminal only, or there can be a low current flowing through the line, the slope setting of the differential characteristic does not guarantee stability of the relay on transformer load currents. Consequently, a pickup setting must be increased accordingly in order to prevent maloperation. The L90 forms its restraint current in a unique way. Unlike traditional approaches, the effects of slope and pickup settings are combined: the higher the slope, the lower the pickup setting required for the same restraining effect.

Assuming the line is energized from one terminal and the current is below the lower break-point of the characteristic, consider using the following stability conditions in order to select the pickup (P) and slope (S_1) settings, where I_{LOAD} is a maximum total load current of the tapped transformer(s).

Two-terminal applications:

$$I_{op}^2 = I_{LOAD}^2$$

$$I_{REST}^2 = 2S_1^2 I_{LOAD}^2 + 2P^2$$

Stability condition: $2S_1^2 I_{LOAD}^2 + 2P^2 > I_{LOAD}^2$

Three-terminal applications:

$$I_{op}^2 = I_{LOAD}^2$$

$$I_{REST}^2 = \frac{4}{3}S_1^2 I_{LOAD}^2 + 2P^2$$

Stability condition: $\frac{4}{3}S_1^2 I_{LOAD}^2 + 2P^2 > I_{LOAD}^2$

The calculations need to take into account the requirement for the pickup setting resulting from line charging currents. Certainly, a security factor must be applied to the above stability conditions. Alternatively, distance supervision can be considered to prevent maloperation due to transformer load currents.

8.7.3 LV-side faults

Use Distance Supervision to prevent maloperation of the L90 protection system during faults on the LV-side of the transformer(s). As explained earlier, set the distance elements to overreach all line terminals, and at the same time safely underreach the LV busbars of all the tapped transformers. This can present some challenges, particularly for long lines and large transformers tapped close to the substations. If the L90 system retrofits distance relays, there is a good chance that one can set the distance elements to satisfy the imposed. If more than one transformer is tapped, particularly on parallel lines, and the LV sides are interconnected, detailed short circuit studies can be needed to determine the distance settings.

8.7.4 External ground faults

External ground faults behind the line terminals are seen by the overreaching distance elements. At the same time, the tapped transformer(s), if connected in a grounded wye, feed the zero-sequence current. This current is going to be seen at one L90 terminal only, causes a spurious differential signal, and consequently, can cause maloperation.

The L90 ensures stability in such a case by removing the zero-sequence current from the phase currents prior to calculating the operating and restraining signals (**SETTINGS ⇨⇩ SYSTEM SETUP ⇨⇩ L90 POWER SYSTEM ⇨⇩ ZERO-SEQ CURRENT REMOVAL** is "Enabled"). Removing the zero-sequence component from the phase currents can cause the L90 to overtrip healthy phases on internal ground fault. This is not a limitation, as the single-pole tripping is not recommended for lines with tapped transformers.

8.8 Instantaneous elements

8.8.1 Instantaneous element error during L90 synchronization

Two or three L90 relays are synchronized to each other and to system frequency to provide line current differential protection and accurate measurements for other protection and control elements. When an L90 system starts up, the relays adjust their tracking frequency aggressively to bring all relays into synchronization within the system quickly. The tracking frequency can differ from the nominal (or system frequency) by a few hertz, especially during the first second of synchronization, with one relay having tracking frequency above system frequency and another below system frequency. The same re-synchronization process happens if a channel fails for a long time, leading to phase and frequency lock loop (PFLL) failure and then the channel is restored and relays are re-synchronized to each other again.

The 87L element is blocked during synchronization; therefore, the difference between system frequency and relay sampling frequency does not affect 87L element itself. However, instantaneous protection elements can experience additional error caused by the difference between signal frequency and tracking frequency.

The following curves demonstrate the maximum error with tracking frequency both above and below system frequency. At time t=0 s, the channel is restored and in approximately 100 ms required to check channel reliability and to receive valid timestamps, while the re-synchronization process starts. As can be observed, instantaneous current, voltage, and impedance elements experience accuracy error, especially during first 100 to 330 ms during the re-synchronization process after either system start up or recovering from the communications failure. Because relay tracking frequency can be above or below system frequency randomly, consider the worst error depending on the element type. For example, for overvoltage or overcurrent, the worst case happens when error causes the measured quantity to appear above system value (positive error), which occurs when relay tracking frequency is below system frequency. For undervoltage or impedance, the worst case happens when error causes the measured quantity to appear below system value (negative error), which occurs when relay tracking frequency is above system frequency.

Figure 8-8: Maximum error for 60 Hz system

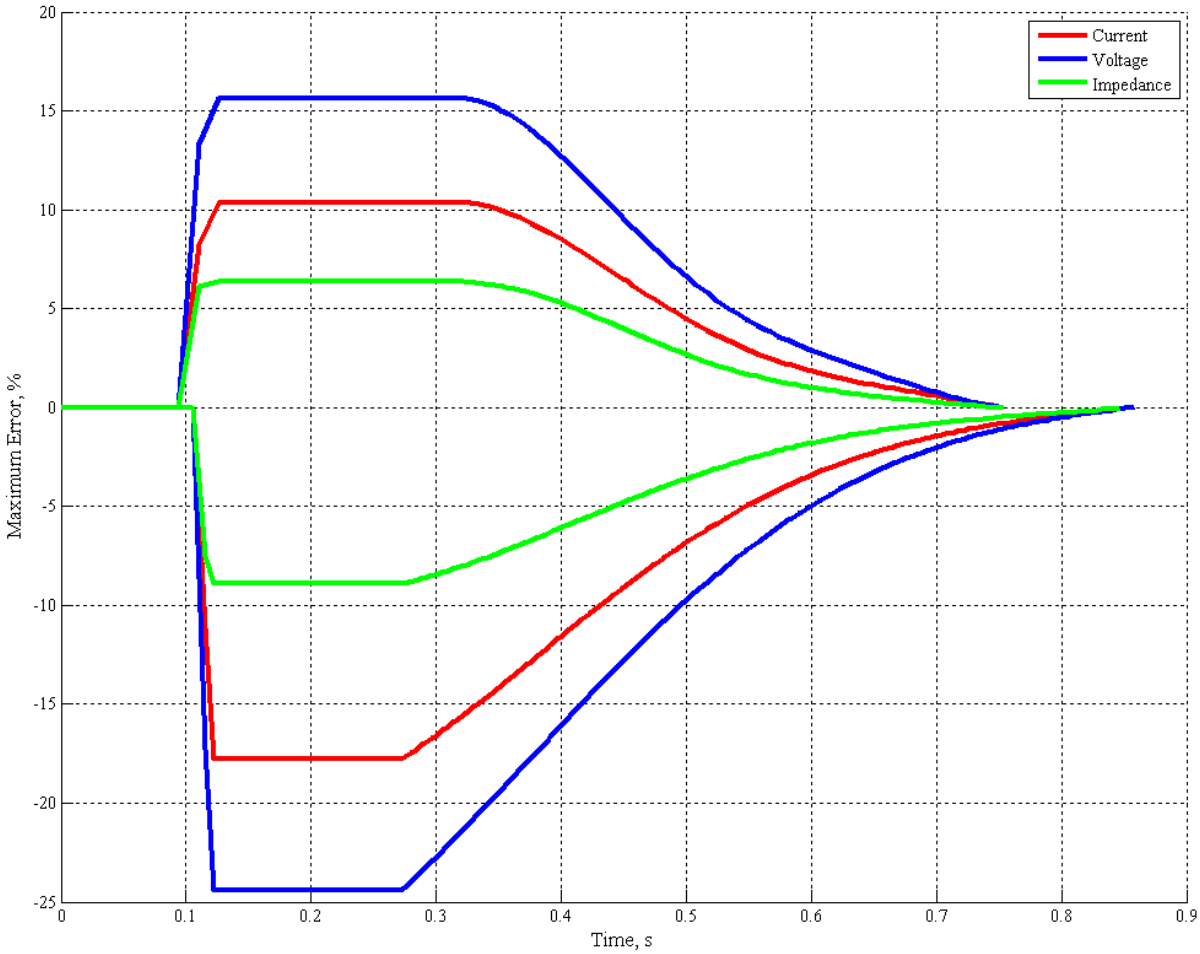

Not all instantaneous elements have to be blocked during the re-synchronization process. For example, the impedance element maximum error is 8.86% at 60 Hz. With a typical margin of 15 percent, this is still well below impedance reach point. Another example is Phase IOC; typically, these elements have very sufficient margin for the overload conditions and are set high enough above these conditions. But voltage-based elements can be set quite close to the system nominal voltage or operating voltage and can require attention.

Figure 8-9: Maximum error for 50 Hz system

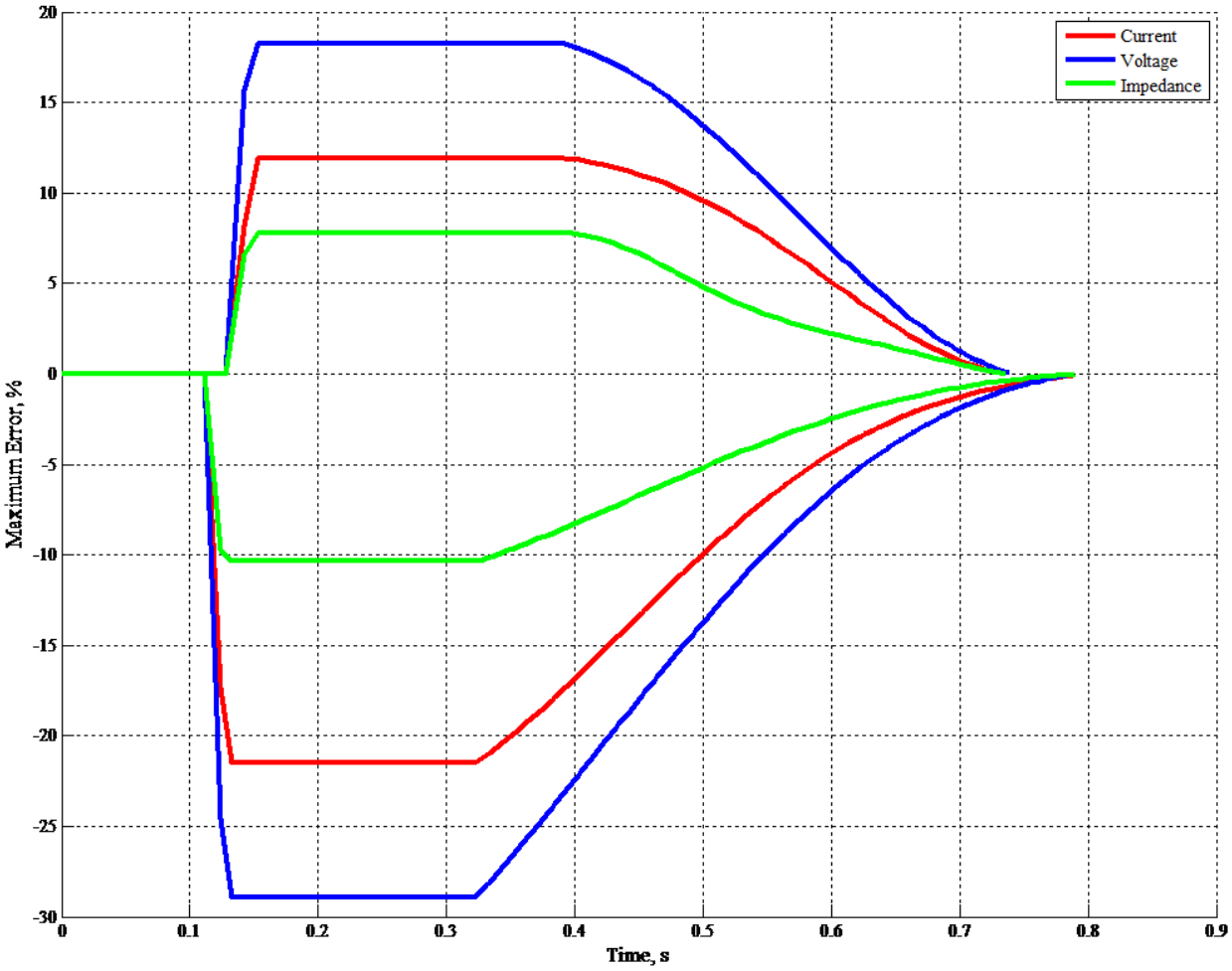

To secure instantaneous element operation, it is recommended to use either FlexLogic as shown next to block the instantaneous elements during synchronization, or to use a different setting group with more conservative pickup for this brief interval. A 700 ms drop-off timer in the logic is shown as an example to guarantee error below 3 percent, but delay can be realistically even shorter, if the setting security margin allows this.

Figure 8-10: FlexLogic to block instantaneous element during 87L startup

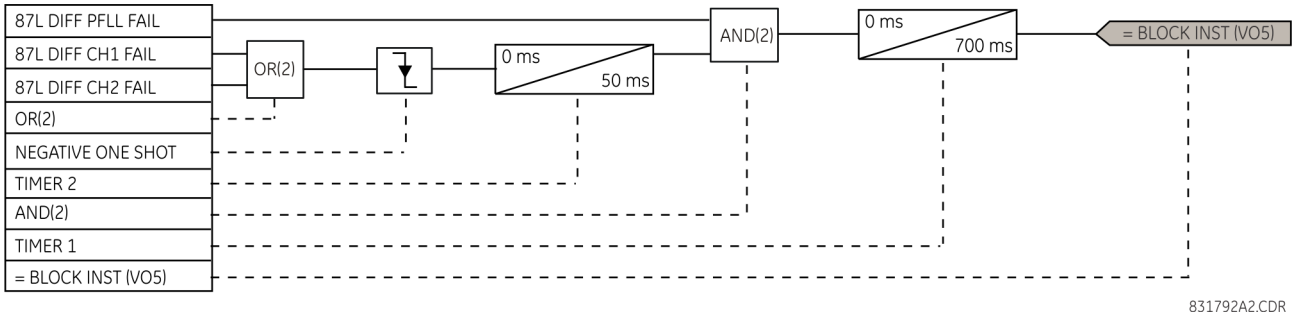

The elements must be treated selectively. If, for example, the phase over or under voltage setting includes margin or time delay sufficient to accommodate the maximum additional error on re-synchronization, blocking or delay are not needed for these elements. Similarly, if the phase instantaneous overcurrent setting has sufficient margin, blocking is not needed. Note that significant zero-sequence and negative-sequence current or voltage error do not appear during L90 startup, therefore all sequence-based elements using these quantities are safe.

For the three-terminal line, the synchronization process is longer and block times need to be three times longer than two-terminal line block times.

8.9 Phase distance through power transformers

8.9.1 Phase distance protection

8.9.1.1 Overview

Phase distance elements of the L90 can be set to respond to faults beyond any three-phase power transformer. The relay guarantees accurate reach and targeting for any phase fault. Moreover, the current and voltage transformers can be located independently on different sides of the transformer.

The following setting rules apply to this feature:

- A given distance zone is terminated by location of the VTs, not the CTs
- Consequently, the positive-sequence impedance of a transformer must be included in the reach setting only if the transformer is located between the potential source and the intended reach point
- The current signals require compensation if the transformer is located between the CTs and the intended reach point. If this is the case, set the CT connection setting to transformer connection and vector group as seen from the CTs toward the reach point. Otherwise, set the CT connection setting to "None."
- The voltage signals require compensation if the transformer is located between the VTs and the intended reach point. If this is the case, set the VT connection setting to transformer connection and vector group as seen from the VTs toward the reach point. Otherwise, set the VT connection setting to "None."
- The reach setting is entered in secondary ohms and as such must take into account location and ratios of VTs and CTs, as well as voltage ratio of the involved power transformer

The following equations explain the setting rules. Consider two applications as shown in the figure.

Figure 8-11: Phase distance through a power transformer

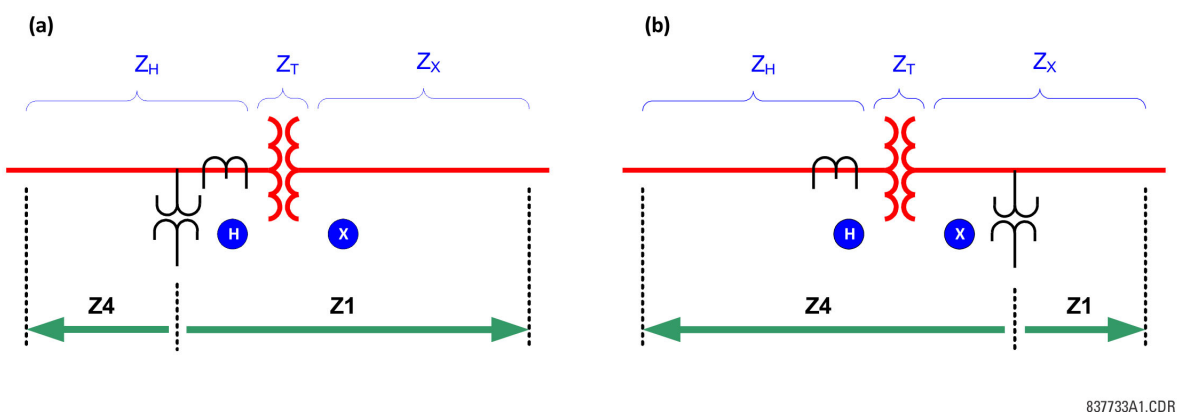

where

Z_X = intended reach impedance for Zone 1 (primary ohms)
Z_H = intended reach impedance for Zone 4 (primary ohms)
Z_T = positive-sequence impedance of the transformer

V_X, V_H = transformer rated voltages
n_{CT} = transformation ratio of the CTs
n_{VT} = transformation ratio of the VTs
Z1: Z1 reach setting (secondary ohms)
Z4: Zone 4 reach setting (secondary ohms)

8.9.1.2 Zone 1 setting in application A

As the transformer is located between the potential source and the reach point for Zone 1, the reach impedance must include the positive-sequence impedance of the transformer. In addition, the primary impedance must be re-calculated for the voltage level of the VTs and CTs, and eventually, re-calculated to secondary quantities:

$$Z_1 = (Z_T(\text{at } X) + Z_x) \times \left(\frac{V_H}{V_X}\right)^2 \times \frac{n_{CT}}{n_{VT}} \quad \textbf{Eq. 8-15}$$

8.9.1.3 Zone 4 setting in application A

As the transformer is not located between the potential source and the reach point for Zone 4, the reach impedance must not include the positive-sequence impedance of the transformer. Because both VTs and CTs are located on the same side as the intended reach point, no correction for the transformer ratio is required. The primary impedance must be only re-calculated to secondary quantities:

$$Z_4 = Z_H \times \frac{n_{CT}}{n_{VT}} \quad \textbf{Eq. 8-16}$$

8.9.1.4 Zone 1 setting in application B

As the transformer is not located between the potential source and the reach point for Z1, the reach impedance must not include the positive-sequence impedance of the transformer. The CTs are located on the other side of the transformer, thus transformer ratio must be included:

$$Z_1 = Z_X \times \left(\frac{V_H}{V_X}\right) \times \frac{n_{CT}}{n_{VT}} \quad \textbf{Eq. 8-17}$$

8.9.1.5 Zone 4 setting in application B

As the transformer is located between the potential source and the reach point for Zone 4, the reach impedance must include the positive-sequence impedance of the transformer. The VTs are located on the other side of the transformer, thus transformer ratio must be included:

$$Z_4 = (Z_T(\text{at } H) + Z_H) \times \left(\frac{V_X}{V_H}\right) \times \frac{n_{CT}}{n_{VT}} \quad \textbf{Eq. 8-18}$$

8

8.9.2 Example

Given the following for the system shown in the previous section:

Z_X = 30 Ω ∠85° (intended reach of Zone 1)
Z_H = 0.06 Ω ∠88° (intended reach of Zone 4)
n_{CT} = 8000:5 = 1600 (located at H)
n_{VT} = 315000:120 = 2625 (located at X)
Transformer: 13.8/315 kV, 150 MVA, 10%, delta/wye, 315 kV side lagging 30°

Transformer impedance:

$$Z_T(\text{at H}) = \frac{10}{100} \times \frac{(13.8)^2}{150} = 0.127\Omega\angle 90° \quad \textbf{Eq. 8-19}$$

The Zone 1 settings are:

$$Z_1 = 30 \times \frac{13.8}{315} \times \frac{1600}{2625} = 0.8011\Omega\angle 85° \quad \textbf{Eq. 8-20}$$

PHS DIST Z1 REACH: "0.80"
PHS DIST Z1 RCA: "85"
PHS DIST Z1 XMFR VOL CONNECTION: "None"
PHS DIST Z1 XMFR CUR CONNECTION: "Dy1"

The Zone 4 settings are:

$$Z_4 = (0.127\angle 90° + 0.006\angle 88°) \times \frac{315}{13.8} \times \frac{1600}{2625} = 2.601\Omega\angle 89.4° \quad \textbf{Eq. 8-21}$$

PHS DIST Z4 REACH: "2.60"
PHS DIST Z4 RCA: "89"
PHS DIST Z4 XMFR VOL CONNECTION: "Yd11"
PHS DIST Z4 XMFR CUR CONNECTION: "None"

L90 Line Current Differential System

Chapter 9: Commissioning

9.1 Testing

9.1.1 Channel testing

The communications system transmits and receives data between two or three terminals for the 87L function. The system is designed to work with multiple channel options, including direct and multiplexed optical fiber, G.703, and RS422. The speed is 64 Kbaud in a transparent synchronous mode with automatic synchronous character detection and CRC insertion.

The Local Loopback Channel Test verifies the L90 communication modules are working properly. The Remote Loopback Channel Test verifies the communication link between the relays meets requirements (BER less than 10–4). All tests are verified by using the internal channel monitoring and the monitoring in the Channel Tests. All of the tests presented in this section must be either OK or PASSED.

1. Verify that a type "W" module is placed in slot 'W' in both relays (for example W7J).
2. Interconnect the two relays using the proper media (for example, single-mode fiber cable) observing correct connection of receiving (Rx) and transmitting (Tx) communications paths and turn power on to both relays.
3. Verify that the Order Code in both relays is correct.
4. Cycle power off/on in both relays.
5. Verify and record that both relays indicate In Service on the front display.
6. Make the following setting change in both relays: **GROUPED ELEMENTS ⇨⇩ GROUP 1 ⇨⇩ CURRENT DIFFERENTIAL ELEMENTS ⇨ CURRENT DIFFERENTIAL ⇨ CURRENT DIFF FUNCTION**: "Enabled."
7. Verify and record that both relays have established communications with the following status checks:

   ACTUAL VALUES ⇨⇩ STATUS ⇨⇩ CHANNEL TESTS ⇨⇩ CHANNEL 1 STATUS: "OK"

   ACTUAL VALUES ⇨⇩ STATUS ⇨⇩ CHANNEL TESTS ⇨⇩ CHANNEL 2 STATUS: "OK" (If used)
8. Make the following setting change in both relays: **TESTING ⇨ TEST MODE**: "Enabled."
9. Make the following setting change in both relays:

   TESTING ⇨⇩ CHANNEL TESTS ⇨⇩ LOCAL LOOPBACK TEST ⇨⇩ LOCAL LOOPBACK CHANNEL NUMBER: "1"
10. Initiate the Local Loopback Channel Tests by making the following setting change:

    TESTING ⇨⇩ CHANNEL TESTS ⇨⇩ LOCAL LOOPBACK TEST ⇨⇩ LOCAL LOOPBACK FUNCTION: "Yes"

Expected result — In a few seconds "Yes" changes to "Local Loopback Test PASSED" and then to "No", signifying the test was successfully completed and the communication modules operated properly.

11. If Channel 2 is used, make the following setting change and repeat Step 10 for Channel 2 as performed for channel 1:

    TESTING ⇨⇩ CHANNEL TESTS ⇨⇩ LOCAL LOOPBACK TEST ⇨⇩ LOCAL LOOPBACK CHANNEL NUMBER: "2"

12. Verify and record that the Local Loopback Test was performed properly with the following status check:

    ACTUAL VALUES ⇨⇩ STATUS ⇨⇩ CHANNEL TESTS ⇨⇩ CHANNEL 1(2) LOCAL LOOPBACK STATUS: "OK"

13. Make the following setting change in one of the relays:

    TESTING ⇨⇩ CHANNEL TESTS ⇨⇩ REMOTE LOOPBACK TEST ⇨⇩ REMOTE LOOPBACK CHANNEL NUMBER: "1"

14. Initiate the Remote Loopback Channel Tests by making the following setting change:

    TESTING ⇨⇩ CHANNEL TESTS ⇨⇩ REMOTE LOOPBACK ⇨ REMOTE LOOPBACK FUNCTION: "Yes"

    Expected result — The "Running Remote Loopback Test" message appears; within 60 to 100 seconds, the "Remote Loopback Test PASSED" message appears for a few seconds and then changes to "No", signifying that the test successfully completed and communications with the relay were successfully established. The "Remote Loopback Test FAILED" message indicates that either the communication link quality does not meet requirements (BER less than 10–4) or the channel is not established – check the communications link connections.

15. If Channel 2 is used, make the following setting change and repeat Step 14 for Channel 2 as performed for Channel 1:

    TESTING ⇨⇩ CHANNEL TESTS ⇨⇩ REMOTE LOOPBACK TEST ⇨⇩ REMOTE LOOPBACK CHANNEL NUMBER: "2"

16. Verify and record the Remote Loopback Test was performed properly with the following status check:

    ACTUAL VALUES ⇨⇩ STATUS ⇨⇩ CHANNEL TESTS ⇨⇩ CHANNEL 1(2) REMOTE LOOPBACK STATUS: "OK"

17. Verify and record that Remote Loopback Test fails during communications failures as follows: start test as per Steps 13 to 14 and in two to five seconds disconnect the fiber Rx cable on the corresponding channel.

    Expected result — The "Running Remote Loopback Test" message appears. When the channel is momentarily cut off, the "Remote Loopback Test FAILED" message displays. The status check reads as follows: **ACTUAL VALUES ⇩ STATUS ⇩ CHANNEL TESTS ⇨ CHANNEL 1(2) LOCAL LOOPBACK STATUS**: "Fail"

18. Re-connect the fiber Rx cable. Repeat Steps 13 to 14 and verify that Remote Loopback Test performs properly again.
19. Verify and record that Remote Loopback Test fails if communications are not connected properly by disconnecting the fiber Rx cable and repeating Steps 13 to 14.

    Expected result — The **ACTUAL VALUES ⇨⇩ STATUS ⇨⇩ CHANNEL TESTS ⇨⇩ CHANNEL 1(2) REMOTE LOOPBACK TEST**: "Fail" message is constantly on the display.

20. Repeat Steps 13 to 14 and verify that Remote Loopback Test is correct.
21. Make the following setting change in both relays: **TESTING ⇨ TEST MODE**: "Disabled"

NOTE

During channel tests, verify in the **ACTUAL VALUES ⇨⇩ STATUS ⇨⇩ CHANNEL TESTS ⇨ CHANNEL 1(2) LOST PACKETS** display that the values are very low or even 0. If values are comparatively high, check the settings of communications equipment (if applicable).

9.1.2 Clock synchronization tests

The 87L clock synchronization is based upon a peer-to-peer architecture in which all relays are Masters. The relays are synchronized in a distributed fashion. The clocks are phase-synchronized to each other and frequency-synchronized to the power-system frequency. The performance requirement for the clock synchronization is a maximum error of ±130 μs.

All tests are verified by using PFLL status displays. All PFLL status displays must be either OK or Fail.

1. Ensure that Steps 1 through 7 inclusive of the previous section are completed.
2. Verify and record that both relays have established communications with the following checks after 60 to 120 seconds:

   ACTUAL VALUES ⇨ STATUS ⇨⇩ CHANNEL TESTS ⇨⇩ CHANNEL 1(2) STATUS: "OK"

   ACTUAL VALUES ⇨ STATUS ⇨⇩ CHANNEL TESTS ⇨⇩ REMOTE LOOPBACK STATUS: "n/a"

   ACTUAL VALUES ⇨ STATUS ⇨⇩ CHANNEL TESTS ⇨⇩ PFLL STATUS: "OK"

3. Disconnect the fiber Channel 1(2) Tx cable for less than 66 ms (not possible with direct fiber module).

   Expected result

   ACTUAL VALUES ⇨ STATUS ⇨⇩ CHANNEL TESTS ⇨⇩ CHANNEL 1(2) STATUS: "OK"

   ACTUAL VALUES ⇨ STATUS ⇨⇩ CHANNEL TESTS ⇨⇩ REMOTE LOOPBACK STATUS: "n/a"

   ACTUAL VALUES ⇨ STATUS ⇨⇩ CHANNEL TESTS ⇨⇩ PFLL STATUS: "OK"

   If fault conditions are applied to the relay during these tests, it trips with a specified 87L operation time.
4. Disconnect the fiber Channel 1(2) Tx cable for more than 66 ms but less than 5 seconds.

   Expected result

   ACTUAL VALUES ⇨ STATUS ⇨⇩ CHANNEL TESTS ⇨⇩ CHANNEL 1(2) STATUS: "OK"

   ACTUAL VALUES ⇨ STATUS ⇨⇩ CHANNEL TESTS ⇨⇩ REMOTE LOOPBACK STATUS: "n/a"

   ACTUAL VALUES ⇨ STATUS ⇨⇩ CHANNEL TESTS ⇨⇩ PFLL STATUS: "OK"

   If fault conditions are applied to the relay (after the channel is brought back) during these tests, it trips with a specified 87L operation time plus 50 to 80 ms required for establishing PFLL after such interruption.
5. Disconnect the fiber Channel 1(2) Tx cable for more than five seconds.

   Expected result

   ACTUAL VALUES ⇨ STATUS ⇨⇩ CHANNEL TESTS ⇨⇩ CHANNEL 1(2) STATUS: "OK"

   ACTUAL VALUES ⇨ STATUS ⇨⇩ CHANNEL TESTS ⇨⇩ REMOTE LOOPBACK STATUS: "n/a"

   ACTUAL VALUES ⇨ STATUS ⇨⇩ CHANNEL TESTS ⇨⇩ PFLL STATUS: "Fail"
6. Reconnect the fiber Channel 1(2) Tx cable and in six to eight seconds confirm that the relays have re-established communications again with the following status checks:

   ACTUAL VALUES ⇨ STATUS ⇨⇩ CHANNEL TESTS ⇨ CHANNEL 1(2) STATUS: "OK"

   ACTUAL VALUES ⇨ STATUS ⇨⇩ CHANNEL TESTS ⇨⇩ REMOTE LOOPBACK STATUS: "n/a"

   ACTUAL VALUES ⇨ STATUS ⇨⇩ CHANNEL TESTS ⇨⇩ PFLL STATUS: "OK"
7. Apply a current of 0.5 pu at a frequency 1 to 3% higher or lower than nominal only to local relay phase A to verify that frequency tracking does not affect PFLL when only one relay has a current input and both relays track frequency. Wait 200 seconds and verify the following:

   ACTUAL VALUES ⇨ STATUS ⇨⇩ CHANNEL TESTS ⇨ PFLL STATUS: "OK"

   ACTUAL VALUES ⇨⇩ METERING ⇨⇩ TRACKING FREQUENCY ⇨ TRACKING FREQUENCY: actual frequency at both relays

NOTE

For three-terminal configuration, carry out the test accordingly.

9.1.3 Current differential

The 87L element has adaptive restraint and dual slope characteristics. The pickup slope settings and the breakpoint settings determine the element characteristics. The relay displays both local and remote current magnitudes and angles and the differential current that helps with start-up activities. When a differential condition is detected, the output operands from the element are asserted along with energization of faceplate event indicators.

1. Ensure that relay will not issue any undesired signals to other equipment.
2. Ensure that relays are connected to the proper communication media, communications tests have been performed and the CHANNEL and PFLL STATUS displays indicate OK.
3. Minimum pickup test with local current only:
   3.1. Ensure that all 87L setting are properly entered into the relay and connect a test set to the relay to inject current into Phase A.

3.2. Slowly increase the current until the relay operates and note the pickup value. The theoretical value of operating current below the breakpoint is given by the following formula, where P is the pickup setting and S_1 is the Slope 1 setting (in decimal format):

$$I_{op} = \sqrt{2 \times \frac{P^2}{1 - 2S_1^2}} \qquad \textbf{Eq. 9-1}$$

3.3. Repeat the above test for different slope and pickup settings, if desired.

3.4. Repeat the above tests for Phases B and C.

4. Minimum pickup test with local current and simulated remote current (pure internal fault simulation):

4.1. Disconnect the local relay from the communications channel.

4.2. Loop back the transmit signal to the receive input on the back of the relay.

4.3. Wait until the CHANNEL and PFLL status displays indicate OK.

4.4. Slowly increase the current until the relay operates and note the pickup value. The theoretical value of operating current below breakpoint is given by the following formula:

$$I_{op} = \sqrt{\frac{2P^2}{(1 + TAP)^2 - 2S_1^2(1 + TAP^2)}} \qquad \textbf{Eq. 9-2}$$

where
TAP represents the CT Tap setting for the corresponding channel

4.5. Repeat the above test for different slope and pickup settings, if desired.

4.6. During the tests, observe the current phasor at **ACTUAL VALUES ⇨⇩ METERING ⇨ 87L DIFF CURRENT ⇨ LOCAL IA**. This phasor should also be seen at **ACTUAL VALUES ⇨⇩ METERING ⇨ 87L DIFF CURRENT ⇨⇩ TERMINAL 1(2) IA** along with a phasor of twice the magnitude at **ACTUAL VALUES ⇨⇩ METERING ⇨ 87L DIFF CURRENT ⇨⇩ IA DIFF**.

4.7. Repeat the above tests for Phases B and C.

4.8. Restore the communication circuits to normal.

NOTE

Download the UR test software from the GE Grid Solutions website (http://www.gegridsolutions.com/products/support/ur/l90test.zip) or contact GE Grid Solutions for information about the UR current differential test program that allows the user to simulate different operating conditions for verifying correct responses of the relays during commissioning activities.

9.1.4 Local-remote relay tests

9.1.4.1 Direct transfer trip (DTT) tests

The direct transfer trip is a function by which one relay sends a signal to a remote relay to cause a trip of remote equipment. The local relay trip outputs closes upon receiving a direct transfer trip from the remote relay. The test procedure is as follows:

1. Ensure that relay will not issue any undesired signals to other equipment and all previous tests have been completed successfully.
2. Cycle power off/on in both relays.
3. Verify and record that both relays indicate In Service on the faceplate display.
4. Make the following setting change in the **SETTINGS ⇨⇩ GROUPED ELEMENTS ⇨⇩ LINE DIFFERENTIAL ELEMENT ⇨ CURRENT DIFFERENTIAL** menu of both relays:

   CURRENT DIFF FUNCTION: "Enabled"
5. Verify and record that both relays have established communications by performing the following status check thorough the **ACTUAL VALUES ⇨ STATUS ⇨⇩ CHANNEL TESTS** menu:

   CHANNEL 1(2) STATUS: "OK"

6. At the remote relay, make the following changes in the **SETTINGS ⇨⇩ GROUPED ELEMENTS ⇨⇩ LINE DIFFERENTIAL ELEMENT ⇨⇩ CURRENT DIFFERENTIAL** menu:

   CURRENT DIFF DTT: "Enabled"
7. At the Local relay, make the following changes in the **SETTINGS ⇨⇩ INPUTS/OUTPUTS ⇨⇩ CONTACT OUTPUT N1** menu:

   CONTACT OUTPUT N1 OPERATE: "87L DIFF RECVD DTT"
8. At the Local relay, verify that **ACTUAL VALUES ⇨ STATUS ⇨⇩ CONTACT OUTPUTS ⇨⇩ Cont Op N1** is in the "Off" state.
9. Apply current to phase A of the remote relay and increase until 87L operates.
10. At the Local relay, observe **ACTUAL VALUES ⇨ STATUS ⇨⇩ CONTACT OUTPUTS ⇨⇩ Cont Op N1** is now in the "On" state.
11. Repeat steps 8 through 10 for phases A and B and observe Contact Outputs N2 and N3, respectively.
12. Repeat steps 8 through 11 with the Remote and Local relays inter-changed.
13. Make the following setting change in the **SETTINGS ⇨⇩ GROUPED ELEMENTS ⇨⇩ LINE DIFFERENTIAL ELEMENT ⇨ CURRENT DIFFERENTIAL** menu of both relays:

    CURRENT DIFF FUNCTION: "Disabled"
14. At the Remote relay, set **SETTINGS ⇨⇩ INPUTS/OUTPUTS ⇨⇩ CONTACT OUTPUT N1 ⇨⇩ CONTACT OUTPUT N1 OPERATE** to the CURRENT DIFF KEY DTT operand.
15. At the Local relay, observe under the **ACTUAL VALUES ⇨ STATUS ⇨⇩ CONTACT OUTPUTS** menu that **CONTACT OUTPUT N1**, **N2**, and **N3** are "Off".
16. At the Remote relay, set **SETTINGS ⇨⇩ TESTING ⇨⇩ FORCE CONTACT INPUTS ⇨ FORCE Cont Ip N1** to "Closed".
17. At the Local relay, observe under **ACTUAL VALUES ⇨ STATUS ⇨⇩ CONTACT OUTPUTS** that **CONTACT OUTPUT N1**, **N2**, and **N3** are now "On".
18. At both the Local and Remote relays, return all settings to normal.

9.1.4.2 Final tests

As proper operation of the relay is fundamentally dependent on the correct installation and wiring of the CTs, it must be confirmed that correct data is brought into the relays by an on-load test in which simultaneous measurements of current and voltage phasors are made at all line terminals. These phasors and differential currents can be monitored at the **ACTUAL VALUES ⇨⇩ METERING ⇨ 87L DIFFERENTIAL CURRENT** menu where all current magnitudes and angles can be observed and conclusions of proper relay interconnections can be made.

L90 Line Current Differential System

Chapter 10: Theory of operation

This chapter outlines advanced information on operation.

10.1 Overview

10.1.1 L90 design

All differential techniques rely on the fact that under normal conditions, the sum of the currents entering each phase of a transmission line from all connected terminals is equal to the charging current for that phase. Beyond the fundamental differential principle, the three most important technical considerations are data consolidation, restraint characteristic, and sampling synchronization. The L90 uses new and unique concepts in these areas.

Data consolidation refers to the extraction of appropriate parameters to be transmitted from raw samples of transmission line phase currents. By employing data consolidation, a balance is achieved between transient response and bandwidth requirements. Consolidation is possible along two dimensions: time and phases. Time consolidation consists of combining a time sequence of samples to reduce the required bandwidth. Phase consolidation consists of combining information from three phases and neutral. Although phase consolidation is possible, it is generally not employed in digital schemes, because you want to detect which phase is faulted. The L90 relay transmits data for all three phases.

Time consolidation reduces communications bandwidth requirements. It also improves security by eliminating the possibility of falsely interpreting a single corrupted data sample as a fault.

The L90 relay system uses a new consolidation technique called “phaselets.” Phaselets are partial sums of the terms involved in a complete phasor computation. The use of phaselets in the L90 design improves the transient response performance without increasing the bandwidth requirements.

Phaselets themselves are not the same as phasors, but they can be combined into phasors over any time window that is aligned with an integral number of phaselets (see the Phaselet Computation section in this chapter). The number of phaselets that must be transmitted per cycle per phase is the number of samples per cycle divided by the number of samples per phaselet. The L90 design uses 64 samples per cycle and 32 samples per phaselet, leading to a phaselet communication bandwidth requirement of two phaselets per cycle. Two phaselets per cycle fits comfortably within a communications bandwidth of 64 Kbaud, and can be used to detect faults within a half cycle plus channel delay.

The second major technical consideration is the restraint characteristic, which is the decision boundary between situations that are declared to be a fault and those that are not. The L90 uses an innovative adaptive decision process based on an online computation of the sources of measurement error. In this adaptive approach, the restraint region is an ellipse with variable major axis, minor axis, and orientation. Parameters of the ellipse vary with time to make best use of the accuracy of current measurements.

The third major element of L90 design is sampling synchronization. In order for a differential scheme to work, the data being compared must be taken at the same time. This creates a challenge when data is taken at remote locations.

The GE approach to clock synchronization relies upon distributed synchronization. Distributed synchronization is accomplished by synchronizing the clocks to each other rather than to a master clock. Clocks are phase-synchronized to each other and frequency-synchronized to the power-system frequency. Each relay compares the phase of its clock to the phase of the other clocks and compares the frequency of its clock to the power-system frequency and makes appropriate adjustments. As long as there are enough channels operating to provide protection, the clocks are synchronized.

10.1.2 L90 architecture

The L90 system uses a peer-to-peer architecture in which the relays at every terminal are identical. Each relay computes differential current and clocks are synchronized to each other. The peer-to-peer architecture is based on two concepts that reduce the dependence of the system on the communication channels: replication of protection and distributed synchronization.

Replication of protection means that each relay is designed to be able to provide protection for the entire system and does so whenever it has enough information. Thus a relay provides protection whenever it is able to communicate directly with all other relays. For a multi-terminal system, the degree of replication is determined by the extent of communication interconnection. If there is a channel between every pair of relays, every relay provides protection. If channels are not provided between every pair of relays, only those relays that are connected to all other relays provide protection.

Each L90 relay measures three phase currents 64 times per cycle. Synchronization in sampling is maintained throughout the system via the distributed synchronization technique.

The next step is the removal of any decaying offset from each phase current measurement. This is done using a digital simulation of the so-called “mimic circuit” (based on the differential equation of the inductive circuit that generates the offset). Next, phaselets are computed by each L90 for each phase from the outputs of the mimic calculation and transmitted to the other relay terminals. Also, the sum of the squares of the raw data samples is computed for each phase, and transmitted with the phaselets.

At the receiving relay, the received phaselets are combined into phasors. Also, ground current is reconstructed from phase information. An elliptical restraint region is computed by combining sources of measurement error. In addition to the restraint region, a separate disturbance detector is used to enhance security.

The possibility of a fault is indicated by the detection of a disturbance as well as the sum of the current phasors falling outside of the elliptical restraint region. The statistical distance from the phasor to the restraint region is an indication of the severity of the fault. To provide speed of response that is commensurate with fault severity, the distance is filtered. For mild faults, filtering improves measurement precision at the expense of a slight delay, on the order of one cycle. Severe faults are detected within a single phaselet. Whenever the sum of phasors falls within the elliptical restraint region, the system assumes there is no fault and uses whatever information is available for fine adjustment of the clocks.

10.1.3 Removal of decaying offset

The inductive behavior of power system transmission lines gives rise to decaying exponential offsets during transient conditions, which can lead to errors and interfere with the determination of how well measured current fits a sinewave.

The current signals are pre-filtered using an improved digital MIMIC filter. The filter removes the DC component(s), guaranteeing transient overshoot below 2% regardless of the initial magnitude and time constant of the DC component(s). The filter has significantly better filtering properties for higher frequencies as compared with a classical MIMIC filter. This is possible without introducing any significant phase delay due to the high sampling rate used by the relay. The output of the MIMIC calculation is the input for the phaselet computation. The MIMIC computation is applied to the data samples for each phase at each terminal. The equation shown is for one phase at one terminal.

10.1.4 Phaselet computation

Phaselets are partial sums in the computation for fitting a sine function to measured samples. Each slave computes phaselets for each phase current and transmits phaselet information to the master for conversion into phasors. Phaselets enable the efficient computation of phasors over sample windows that are not restricted to an integer multiple of a half cycle at the power system frequency. Determining the fundamental power system frequency component of current data

samples by minimizing the sum of the squares of the errors gives rise to the first frequency component of the Discrete Fourier Transform (DFT). In the case of a data window that is a multiple of a half cycle, the computation is simply sine and cosine weighted sums of the data samples. In the case of a window that is not a multiple of a half-cycle, there is an additional correction that results from the sine and cosine functions not being orthogonal over such a window. However, the computation can be expressed as a two-by-two matrix multiplication of the sine and cosine weighted sums.

Phaselets and sum of squares are computed for each phase at each terminal as follows. For the real part, we have:

$$I_{1_Re_A(k)} = \frac{4}{N} \sum_{p=0}^{N/2-1} i_{1_f_A(k-p)} \cdot \cos\left(\frac{2\pi(p+1/2)}{N}\right) \quad \textbf{Eq. 10-1}$$

For the imaginary part, we have:

$$I_{1_Im_A(k)} = -\frac{4}{N} \sum_{p=0}^{N/2-1} i_{1_f_A(k-p)} \cdot \sin\left(\frac{2\pi(p+1/2)}{N}\right) \quad \textbf{Eq. 10-2}$$

where

k is the present phaselet index
N is the number of samples per cycle
p is the present sample index

The computation of phaselets and sum of squares is basically a consolidation process. The phaselet sums are converted into stationary phasors by multiplying by a precomputed matrix. Phaselets and partial sums of squares are computed and time-stamped at each relay and communicated to the remote relay terminals, where they are added and the matrix multiplication is performed. Since the sampling clocks are synchronized, the time stamp is simply a sequence number.

10.1.5 Disturbance detection

A disturbance detection algorithm is used to enhance security and to improve transient response. Conditions to detect a disturbance include the magnitude of zero-sequence current, the magnitude of negative-sequence current, and changes in positive, negative, or zero-sequence current. Normally, differential protection is performed using a full-cycle Fourier transform. Continuous use of a full-cycle Fourier means that some pre-fault data is also used for computation. This can lead to a slowdown in the operation of the differential function. To improve operating time, the window is resized to the half-cycle Fourier once a disturbance is detected, thus removing pre-fault data.

10.1.6 Fault detection

Normally, the sum of the current phasors from all terminals is zero for each phase at every terminal. A fault is detected for a phase when the sum of the current phasors from each terminal for that phase falls outside of a dynamic elliptical restraint boundary for that phase. The severity of the fault is computed as follows for each phase.

The differential current is calculated as a sum of local and remote currents. The real part is expressed as:

$$I_{DIFF_RE_A} = I_{LOC_PHASOR_RE_A} + I_{REM1_PHASOR_RE_A} + I_{REM2_PHASOR_RE_A} \quad \textbf{Eq. 10-3}$$

The imaginary part is expressed as:

$$I_{DIFF_IM_A} = I_{LOC_PHASOR_IM_A} + I_{REM1_PHASOR_IM_A} + I_{REM2_PHASOR_IM_A} \quad \textbf{Eq. 10-4}$$

The differential current is squared for the severity equation:

$$(I_{DIFF_A})^2 = (I_{DIFF_RE_A})^2 + (I_{DIFF_IM_A})^2 \quad \textbf{Eq. 10-5}$$

The restraint current is composed from two distinctive terms: traditional and adaptive. Each relay calculates local portion of the traditional and restraint current to be used locally and sent to remote peers for use with differential calculations. If more than one CT is connected to the relay (breaker-and-the half applications), then a maximum of all (up to four) currents is chosen to be processed for traditional restraint.

The current chosen is expressed as:

$$(I_{LOC_TRAD_A})^2 = \max((I_{1_MAG_A})^2, (I_{2_MAG_A})^2, (I_{3_MAG_A})^2, (I_{4_MAG_A})^2, (I_{q_MAG_A})^2) \quad \textbf{Eq. 10-6}$$

This current is then processed with the slope (S_1 and S_2) and breakpoint (BP) settings to form a traditional part of the restraint term for the local current as follows. For two-terminal systems, we have:

$$\begin{aligned} &\text{If } (I_{LOC_TRAD_A})^2 < BP^2 \\ &\text{then } (I_{LOC_REST_TRAD_A})^2 = 2(S_1 \cdot I_{LOC_TRAD_A})^2 \\ &\text{else } (I_{LOC_REST_TRAD_A})^2 = 2((S_2 \cdot I_{LOC_TRAD_A})^2 - (S_2 \cdot BP)^2) + 2(S_1 \cdot BP)^2 \end{aligned} \quad \textbf{Eq. 10-7}$$

For three-terminal systems we have:

$$\begin{aligned} &\text{If } (I_{LOC_TRAD_A})^2 < BP^2 \\ &\text{then } (I_{LOC_REST_TRAD_A})^2 = \frac{4}{3}(S_1 \cdot I_{LOC_TRAD_A})^2 \\ &\text{else } (I_{LOC_REST_TRAD_A})^2 = \frac{4}{3}((S_2 \cdot I_{LOC_TRAD_A})^2 - (S_2 \cdot BP)^2) + \frac{4}{3}(S_1 \cdot BP)^2 \end{aligned} \quad \textbf{Eq. 10-8}$$

The final restraint current sent to peers and used locally in differential calculations is as follows:

$$I_{LOC_RESTRAINT_A} = \sqrt{(I_{LOC_REST_TRAD_A})^2 + MULT_A \cdot (I_{LOC_ADA_A})^2} \quad \textbf{Eq. 10-9}$$

where

$MULT_A$ is a multiplier that increases restraint if CT saturation is detected (see CT Saturation Detection for details)

$I_{LOC_ADA_A}$ is an adaptive restraint term (see Online Estimate Of Measurement Error for details)

The squared restraining current is calculated as a sum of squared local and all remote restraints:

$$(I_{REST_A})^2 = (I_{LOC_PHASOR_RESTRAINT_A})^2 + (I_{REM1_PHASOR_RESTRAINT_A})^2 + (I_{REM2_PHASOR_RESTRAINT_A})^2 \quad \textbf{Eq. 10-10}$$

The fault severity for each phase is determined by following equation:

$$S_A = (I_{DIFF_A})^2 - (2P^2 + (I_{REST_A})^2) \quad \textbf{Eq. 10-11}$$

where P is the pickup setting.

This equation is based on the adaptive strategy and yields an elliptical restraint characteristic. The elliptical area is the restraint region. When the adaptive portion of the restraint current is small, the restraint region shrinks. When the adaptive portion of the restraint current increases, the restraint region grows to reflect the uncertainty of the measurement. The computed severity increases with the probability that the sum of the measured currents indicates a fault. With the exception of "Restraint," all quantities are defined in previous sections. "Adaptive Restraint" is a restraint multiplier, analogous to the slope setting of traditional differential approaches, for adjusting the sensitivity of the relay.

Raising the restraint multiplier corresponds to demanding a greater confidence interval and has the effect of decreasing sensitivity while lowering it, equivalent to relaxing the confidence interval and increases sensitivity. Thus, the restraint multiplier is an application adjustment that is used to achieve balance between sensitivity and security. The computed severity is zero when the operate phasor is on the elliptical boundary, is negative inside the boundary, and positive outside the boundary. Outside of the restraint boundary, the computed severity grows as the square of the fault current. The restraint area grows as the square of the error in the measurements.

10.1.7 Ground differential element

The line ground differential function allows sensitive ground protection for single-line-to-ground faults, allowing the phase differential element to be set higher (above load) to provide protection for multi-phase faults. The L90 ground differential function calculates ground differential current from all terminal phase currents. The maximum phase current is used for the restraint. The L90 is applied in dual-breaker applications to cope with significant through current at remote terminals that can cause CT errors or saturation.

The line ground differential function uses the same CT matched and time-aligned phasors as the phase-segregated current differential function. The operate signal is calculated for both real and imaginary parts as follows:

$$I_{OP_87G_RE} = I_{LOC_PHASOR_RE_A} + I_{LOC_PHASOR_RE_B} + I_{LOC_PHASOR_RE_C} + I_{REM1_PHASOR_RE_A} + I_{REM1_PHASOR_RE_B} + I_{REM1_PHASOR_RE_C} + I_{REM2_PHASOR_RE_A} + I_{REM2_PHASOR_RE_B} + I_{REM2_PHASOR_RE_C}$$

Eq. 10-12

$$I_{OP_87G_IM} = I_{LOC_PHASOR_IM_A} + I_{LOC_PHASOR_IM_B} + I_{LOC_PHASOR_IM_C} + I_{REM1_PHASOR_IM_A} + I_{REM1_PHASOR_IM_B} + I_{REM1_PHASOR_IM_C} + I_{REM2_PHASOR_IM_A} + I_{REM2_PHASOR_IM_B} + I_{REM2_PHASOR_IM_C}$$

Eq. 10-13

The terms for the second remote terminal are omitted in two-terminal applications.

The maximum through current is available locally and re-constructed from the received remote restraint based on the maximum remote restraint current shown in the previous section and as indicated as follows.

For two-terminal applications:

$$\text{If } (I_{REM_REST_A})^2 < BP^2, \text{ then } (I_{REM_REST_A})^2 = \frac{(I_{REM_RESTRAINT_A})^2}{2S_1^2}$$

$$\text{else } (I_{REM_REST_A})^2 = \frac{(I_{REM_RESTRAINT_A})^2 - 2(S_1 \times BP)^2}{2S_2^2} + BP^2$$

Eq. 10-14

For three-terminal applications:

$$\text{If } (I_{REM_REST_A})^2 < BP^2, \text{ then } (I_{REM_REST_A})^2 = \frac{(I_{REM_RESTRAINT_A})^2}{\frac{4}{3} \times S_1^2}$$

$$\text{else } (I_{REM_REST_A})^2 = \frac{(I_{REM_RESTRAINT_A})^2 - \frac{4}{3}(S_1 \times BP)^2}{\frac{4}{3} \times S_2^2} + BP^2$$

Eq. 10-15

The 87G restraining signal is calculated as follows:

$$(I_{RES_87G})^2 = \max((I_{LOC_REST_A})^2, (I_{LOC_REST_B})^2, (I_{LOC_REST_C})^2, (I_{REM1_REST_A})^2, (I_{REM1_REST_B})^2, (I_{REM1_REST_C})^2, (I_{REM2_REST_A})^2, (I_{REM2_REST_B})^2, (I_{REM2_REST_C})^2)$$

Eq. 10-16

The terms for the second remote terminal are omitted in two-terminal applications.

The operate signal for the ground differential function $(I_{OP_87G})^2$ is then calculated as:

$$(I_{OP_87G})^2 = (I_{OP_87G_RE})^2 + (I_{OP_87G_IM})^2$$

Eq. 10-17

The restraint signal $(I_{87G})^2$ is calculated as follows for two-terminal applications:

$$(I_{87G})^2 = 2S_{87G}{}^2 \times (I_{RES_87G})^2$$

Eq. 10-18

The restraint signal $(I_{87G})^2$ is calculated as follows for three-terminal applications:

$$(I_{87G})^2 = \frac{4}{3} \times S_{87G}{}^2 \times (I_{RES_87G})^2 \quad \textbf{Eq. 10-19}$$

where S_{87G} is the slope setting for the ground differential function.

The ground differential element picks up if the following condition holds.

$$((I_{OP_87G})^2 - (2P_{87G}{}^2 + (I_{87G})^2) > 0) \text{ and } ((I_{RES_87G})^2 < (3\text{ pu})^2) \quad \textbf{Eq. 10-20}$$

where P_{87G} is the pickup setting for the ground differential function.

In other words, when the squared magnitude of the operating signal is greater than the total restraining squared signal, the element operates. For additional security, the function is blocked if the restraining signal is high, indicating that the 87LG function is not required to clear high-current faults, allowing for more sensitive settings to be used for the 87LG function.

10.1.8 Clock synchronization

Synchronization of data sampling clocks is needed in a digital differential protection scheme, because measurements must be made at the same time. Synchronization errors show up as phase angle and transient errors in phasor measurements at the terminals. By phase angle errors, we mean that identical currents produce phasors with different phase angles. By transient errors, we mean that when currents change at the same time, the effect is seen at different times at different measurement points. For best results, take samples simultaneously at all terminals.

In the case of peer-to-peer architecture, synchronization is accomplished by synchronizing the clocks to each other rather than to a master clock. Each relay compares the phase of its clock to the phase of the other clocks and compares the frequency of its clock to the power-system frequency and makes appropriate adjustments. The frequency and phase tracking algorithm keeps the measurements at all relays within a plus or minus 25 microsecond error during normal conditions for a two or three-terminal system. For four or more terminals, the error can be somewhat higher, depending on the quality of the communications channels. The algorithm is unconditionally stable. In the case of two and three-terminal systems, asymmetric communications channel delay is automatically compensated for. In all cases, an estimate of phase error is computed and used to automatically adapt the restraint region to compensate. Frequency tracking is provided that accommodates any frequency shift normally encountered in power systems.

10.1.9 Frequency tracking and phase locking

Each relay has a digital clock that determines when to take data samples and which is phase synchronized to all other clocks in the system and frequency synchronized to the power-system frequency. Phase synchronization drives the relative timing error between clocks to zero. It is needed to control the uncertainty in the phase angle of phasor measurements, which are held to under 26 microseconds (0.6 degrees). Frequency synchronization to the power system eliminates a source of error in phasor measurements that arises when data samples do not exactly span one cycle.

The figure is a block diagram for clock control for a two-terminal system. Each relay makes a local estimate of the difference between the power-system frequency and the clock frequency based on the rotation of phasors. Each relay also makes a local estimate of the time difference between its clock and the other clocks either by exchanging timing information over communications channels or from information that is in the current phasors, depending on whichever one is more accurate at any given time. A loop filter then uses the frequency and phase angle deviation information to make fine adjustments to the clock frequency. Frequency tracking starts if the current at one or more terminals is above 0.125 pu of nominal; otherwise, the nominal frequency is used.

Figure 10-1: Block diagram for clock synchronization in a two-terminal system

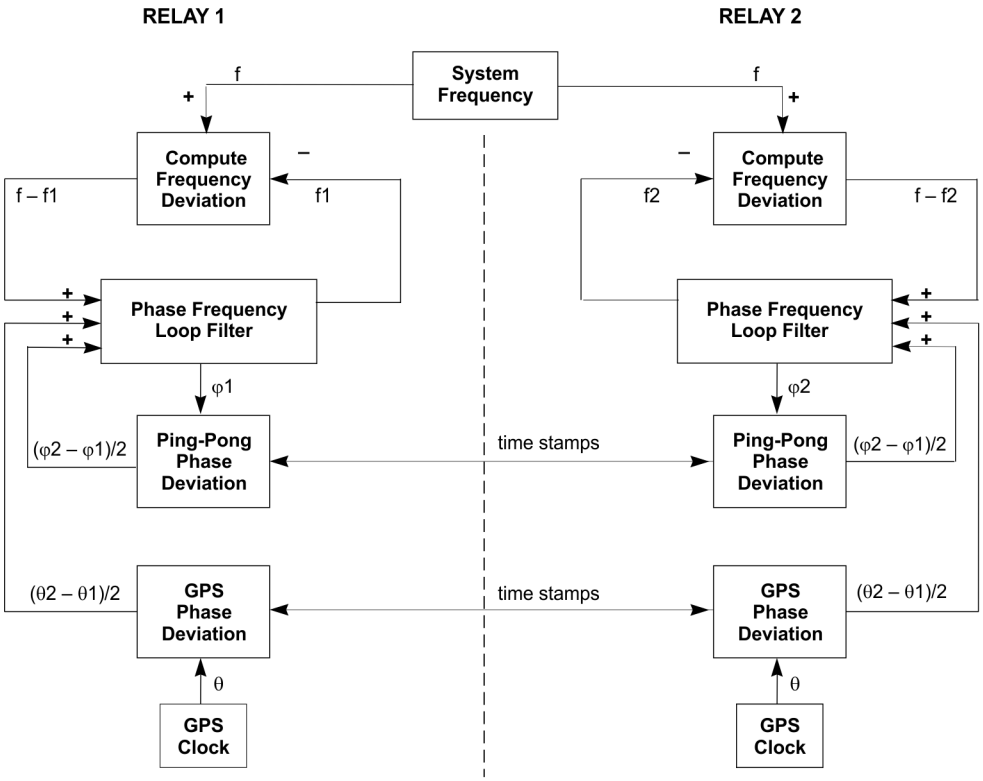

The L90 provides sensitive digital current differential protection by computing differential current from current phasors. To improve sensitivity, the clocks that control current sampling are closely synchronized via the ping-pong algorithm. However, this algorithm assumes that the communication channel delay is identical in each direction. If the delays are not the same, the error between current phasors is equal to half of the transmit-receive time difference. If the error is high enough, the relay perceives the "apparent" differential current and misoperates.

For applications where the communication channel is not symmetric (for example, SONET ring), the L90 allows the use of a global positioning system (GPS) to compensate for the channel delay asymmetry. This feature requires a GPS receiver to provide a GPS clock signal to the L90. With this option there are two clocks at each terminal: a local sampling clock and a local GPS clock. The sampling clock controls data sampling while the GPS clock provides an accurate, absolute time reference used to measure channel asymmetry. The local sampling clocks are synchronized to each other in phase and to the power system in frequency. The local GPS clocks are synchronized to GPS time using the externally provided GPS time signal.

GPS time stamp is included in the transmitted packet along with the sampling clock time stamp. Both sampling clock deviation and channel asymmetry are computed from the four time stamps. One half of the channel asymmetry is then subtracted from the computed sampling clock deviation. The compensated deviation drives the phase and frequency lock loop (PFLL) as shown in the previous figure. If GPS time reference is lost, the channel asymmetry compensation is not enabled, and the relay clock can start to drift and accumulate differential error. In this case, the 87L function has to be blocked. See the Application of Settings chapter for examples of how to program the relay.

10.1.10 Frequency detection

Estimation of frequency deviation is done locally at each relay based on rotation of positive sequence current, or on rotation of positive sequence voltage, if it is available. The counter clockwise rotation rate is proportional to the difference between the desired clock frequency and the actual clock frequency. With the peer-to-peer architecture, there is redundant frequency tracking, so it is not necessary that all terminals perform frequency detection.

Normally each relay detects frequency deviation, but if there is no current flowing nor voltage measurement available at a particular relay, it is not be able to detect frequency deviation. In that case, the frequency deviation input to the loop filter is set to zero and frequency tracking is still achieved because of phase locking to the other clocks. If frequency detection is lost at all terminals because there is no current flowing, then the clocks continue to operate at the frequency present at the time of the loss of frequency detection. Tracking resumes as soon as there is current.

The rotational rate of phasors is equal to the difference between the power system frequency and the ratio of the sampling frequency divided by the number of samples per cycle. The correction is computed once per power system cycle at each relay. For conciseness, we use a phasor notation:

$$\overline{I(n)} = \mathrm{Re}(\mathrm{Phasor}_n) + j \cdot \mathrm{Im}(\mathrm{Phasor}_n)$$

$$\overline{I_{a,k}(n)} = \overline{I(n)} \quad \text{for phase a from the kth terminal at time step n}$$

$$\overline{I_{b,k}(n)} = \overline{I(n)} \quad \text{for phase b from the kth terminal at time step n}$$

$$\overline{I_{c,k}(n)} = \overline{I(n)} \quad \text{for phase c from the kth terminal at time step n}$$

Eq. 10-21

Each terminal computes positive sequence current:

$$\overline{I_{pos,k}(n)} = \frac{1}{3}\left(\overline{I_{a,k}(n)} + \overline{I_{b,k}(n)} \cdot e^{j2\pi/3} + \overline{I_{c,k}(n)} \cdot e^{j2\pi/3}\right)$$

Eq. 10-22

Each relay computes a quantity derived from the positive sequence current that is indicative of the amount of rotation from one cycle to the next, by computing the product of the positive sequence current times the complex conjugate of the positive sequence current from the previous cycle:

$$\overline{\mathrm{Deviation}_k(n)} = \overline{I_{pos,k}(n)} \times \overline{I_{pos,k}(n-N)}^*$$

Eq. 10-23

The angle of the deviation phasor for each relay is proportional to the frequency deviation at that terminal. Since the clock synchronization method maintains frequency synchronism, the frequency deviation is approximately the same for each relay. The clock deviation frequency is computed from the deviation phasor:

$$\mathrm{FrequencyDeviation} = \frac{\Delta f}{f} = \frac{\tan^{-1}\left(\mathrm{Im}(\overline{\mathrm{Deviation}}) / \mathrm{Re}(\overline{\mathrm{Deviation}})\right)}{2\pi}$$

Eq. 10-24

Note that a four-quadrant arctangent can be computed by taking the imaginary and the real part of the deviation separately for the two arguments of the four-quadrant arctangent. Also note that the input to the loop filter is in radian frequency which is two pi times the frequency in cycles per second; that is, $\Delta\omega = 2\pi \cdot \Delta f$.

So the radian frequency deviation can be calculated simply as:

$$\Delta\omega = \Delta f \cdot \tan^{-1}\left(\mathrm{Im}(\overline{\mathrm{Deviation}}) / \mathrm{Re}(\overline{\mathrm{Deviation}})\right)$$

Eq. 10-25

10.1.11 Phase detection

There are two separate sources of clock phase information: exchange of time stamps over the communications channels and the current measurements themselves (although voltage measurements can be used to provide frequency information, they cannot be used for phase detection). Current measurements can generally provide the most accurate information, but they are not always available and can contain large errors during faults or switching transients. Time-stamped messages are the most reliable source of phase information but suffer from a phase offset due to a difference in the channel delays in each direction between a pair of relays. In some cases, one or both directions can be switched to a different physical path, leading to gross phase error.

The primary source of phase information is CPU time-tagged messages. If GPS compensation is enabled, GPS time stamps are used to compensate for asymmetry. In all cases, frequency deviation information also is used when available. The phase difference between a pair of clocks is computed by an exchange of time stamps. Each relay exchanges time stamps with all other relays that can be reached.

It is not necessary to exchange stamps with every relay, and the method works even with some of the channels failed. For each relay that a given relay can exchange time stamps with, the clock deviation is computed each time a complete set of time stamps arrives. The net deviation is the total deviation divided by the total number of relays involved in the exchange.

For example, in the case of two terminals, each relay computes a single time deviation from time stamps, and divides the result by two. In the case of three terminals, each relay computes two time deviations and divides the result by three. If a channel is lost, the single deviation that remains is divided by two.

Four time stamps are needed to compute round-trip delay time and phase deviation. Three stamps are included in the message in each direction. The fourth time stamp is the time when the message is received. Each time a message is received, the oldest two stamps of the four time stamps are saved to become the first two time stamps of the next outgoing message. The third time stamp of an outgoing message is the time when the message is transmitted. A fixed time shift is allowed between the stamp values and the actual events, provided the shift for outgoing message time stamps is the same for all relays, and the shift incoming message time stamps is also identical.

To reduce bandwidth requirements, time stamps are spread over three messages. In the case of systems with four messages per cycle, time stamps are sent out on three of the four messages, so a complete set is sent once per cycle. In the case of systems with one message per cycle, three time stamps are sent out each cycle in a single message. The transmit and receive time stamps are based on the first message in the sequence.

One of the strengths of this approach is that it is not necessary to explicitly identify or match time stamp messages. Usually, two of the time stamps in an outgoing message are simply taken from the last incoming message. The third time stamp is the transmittal time. However, there are two circumstances when these time stamps are not available. One situation is when the first message is transmitted by a given relay. The second is when the exchange is broken long enough to invalidate the last received set of time stamps (if the exchange is broken for longer than 66 ms, the time stamps from a given clock can roll over twice, invalidating time difference computations). In either of these situations, the next outgoing set of time stamps is a special start-up set containing transmittal time only. When such a message is received, nothing is computed from it, except the message time stamp and the received time stamp are saved for the next outgoing message (it is neither necessary nor desirable to “reset” the local clock when such a message is received).

Error analysis shows that time-stamp requirements are not very stringent because of the smoothing behavior of the phase locked loop. The time stamp can be basically a sample count with enough bits to cover the worst round trip, including channel delay and processing delay. An eight-bit time stamp with one bit corresponding to 1/64 of a cycle accommodates a round trip delay of up to four cycles, which is likely to be more than adequate.

The computation of round trip delay and phase offset from four time stamps is as follows:

$$a = T_{i-2} - T_{i-3}$$
$$b = T_i - T_{i-1}$$
$$\delta_i = a + b$$
$$\theta_i = \frac{a-b}{2}$$

Eq. 10-26

The Ts are the time stamps, with T_i the newest. Delta is the round trip delay. Theta is the clock offset, and is the correct sign for the feedback loop. Note that the time stamps are unsigned numbers that wrap around, while a and b can be positive or negative; δ_i must be positive and θ_i can be positive or negative. Some care must be taken in the arithmetic to take into account possible roll over of any of the time stamps. If T_{i-2} is greater than T_{i-1}, there was a roll over in the clock responsible for those two time stamps.

To correct for the roll over, subtract 256 from the round trip and subtract 128 from the phase angle. If T_{i-3} is greater than T_i, add 256 to the round trip and add 128 to the phase angle. Also, if the above equations are computed using integer values of time stamps, a conversion to phase angle in radians is required by multiplying by π / 32.

Time stamp values are snapshots of the local 256 bit sample counter taken at the time of the transmission or receipt of the first message in a time-stamp sequence. This can be done either in software or hardware, provided the jitter is limited to less than plus or minus 130 μs. A fixed bias in the time stamp is acceptable, provided it is the same for all terminals.

Figure 10-2: Round-trip delay and clock-offset computation for time stamps

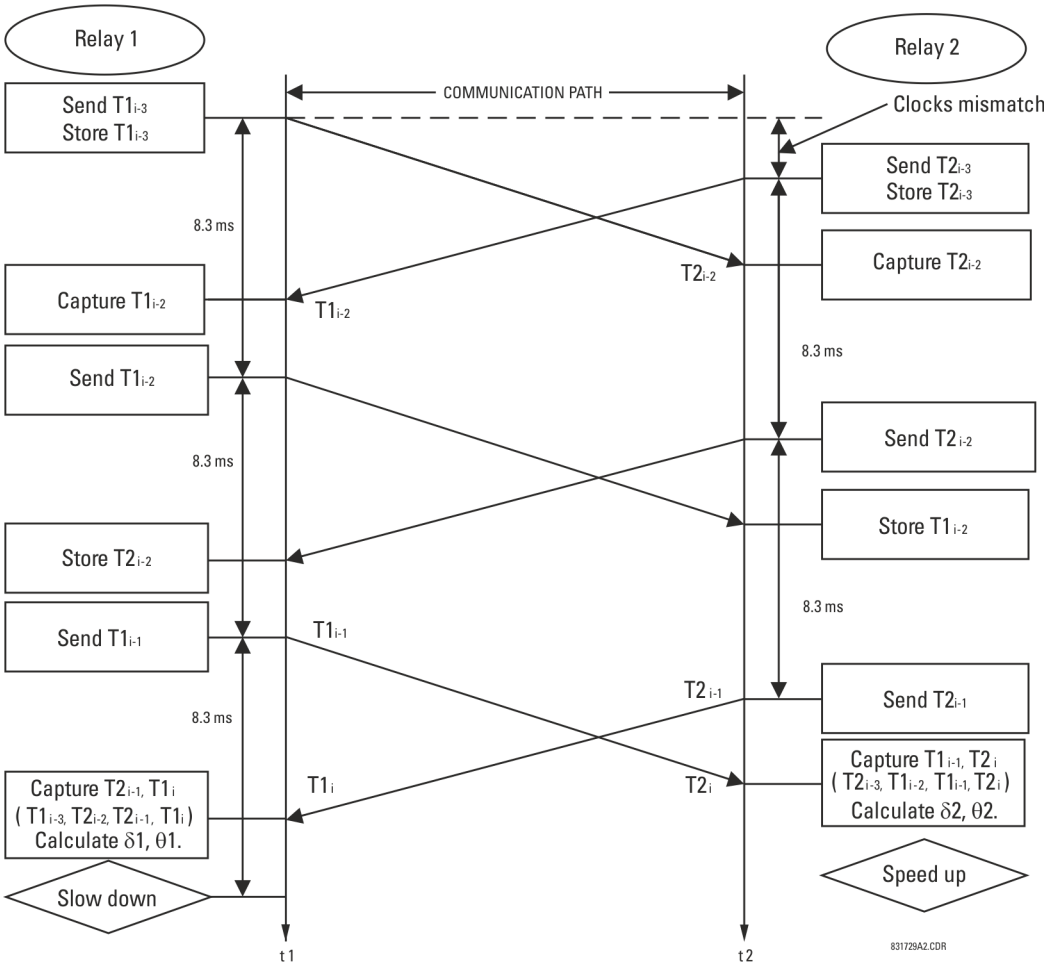

10.1.12 Phase locking filter

Filters are used in the phase locked loop to assure stability, to reduce phase and frequency noise. This is well-known technology. The primary feedback mechanism shown in the Loop Filter Block Diagram is phase angle information through the well-known proportional plus integral (PI) filter (the Z in the diagram refers to a unit delay, and 1 / (Z – 1) represents a simple digital first order integrator). This loop is used to provide stability and zero steady state error.

A PI filter has two time parameters that determine dynamic behavior: the gain for the proportional term and the gain for the integral. Depending on the gains, the transient behavior of the loop can be underdamped, critically damped, or over damped. For this application, critically damped is a good choice.

This sets a constraint relating the two parameters. A second constraint is derived from the desired time constants of the loop. By considering the effects of both phase and frequency noise in this application, it can be shown that optimum behavior results with a certain proportion between phase and frequency constraints.

A secondary input is formed through the frequency deviation input of the filter. Whenever frequency deviation information is available, it is used for this input; otherwise, the input is zero. Because frequency is the derivative of phase information, the appropriate filter for frequency deviation is an integrator, which is combined with the integrator of the PI filter for the phase. It is very important to combine these two integrators into a single function because it can be shown if two separate integrators are used, they can drift in opposite directions into saturation, because the loop would only drive their sum to zero.

In normal operation, frequency tracking at each terminal matches the tracking at all other terminals, because all terminals measure approximately the same frequency deviation. However, if there is not enough current at a terminal to compute frequency deviation, then frequency tracking at that terminal is accomplished indirectly via phase locking to other terminals. A small phase deviation must be present for the tracking to occur.

Also shown in the loop is the clock itself, because it behaves like an integrator. The clock is implemented in hardware and software with a crystal oscillator and a counter.

Figure 10-3: Loop filter block diagram

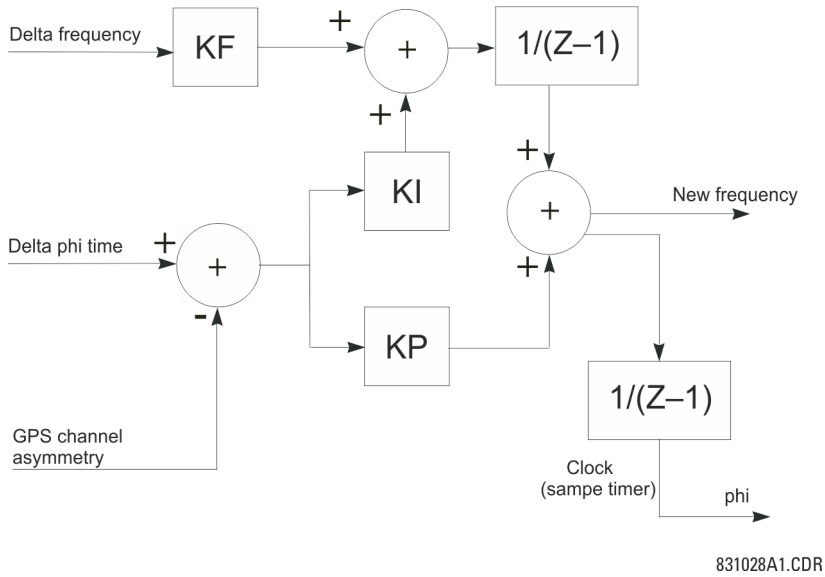

There are four gains in the filter that must be selected once and for all as part of the design of the system. The gains are determined by the time step of the integrators, and the required time constants of the system as follows:

$$KI = \frac{T_{repeat}}{T_{phase}^2}, \quad KP = \frac{2}{T_{phase}}, \quad KF = \frac{T_{repeat}}{T_{frequency}} \qquad \textbf{Eq. 10-27}$$

where

T_{repeat} = the time between execution of the filter algorithm
T_{phase} = time constant for the primary phase locked loop
$T_{frequency}$ = time constant for the frequency locked loop

10.1.13 Matching phaselets

An algorithm is needed to match phaselets, detect lost messages, and detect communications channel failure. Channel failure is defined by a sequence of lost messages, where the length of the sequence is a design parameter. In any case, the sequence is no longer than the maximum sequence number (four cycles) in order to be able to match up messages when the channel is assumed to be operating normally.

A channel failure can be detected by a watchdog software timer that times the interval between consecutive incoming messages. If the interval exceeds a maximum limit, channel failure is declared and the channel recovery process is initiated.

While the channel is assumed to be operating normally, it is still possible for an occasional message to be lost, in which case fault protection is suspended for the time period that depends on that message, and is resumed on the next occasional message. A lost message is detected simply by looking at the sequence numbers of incoming messages. A lost message shows up as a gap in the sequence.

Sequence numbers are also used to match messages for the protection computation. Whenever a complete set of current measurements from all terminals with matching sequence numbers are available, the differential protection function is computed using that set of measurements.

10.1.14 Start-up

Initialization in our peer-to-peer architecture is done independently at each terminal. Relays can be turned on in any order with the power system either energized or de-energized. Synchronization and protection functions are accomplished automatically whenever enough information is available.

After a relay completes other initialization tasks, such as resetting of buffer pointers and determining relay settings, initial values are computed for any state variables in the loop filters or the protection functions. The relay starts its clock at the nominal power-system frequency. Phaselet information is computed and transmitted.

- Outgoing messages over a given channel are treated in the same way as during the channel recovery process. The special start-up message is sent each time containing only a single time step value.
- When incoming messages begin arriving over a channel, that channel is placed in service and the loop filters are started up for that channel.
- Whenever the total clock uncertainty is less than a fixed threshold, the phase locking filter is declared locked and differential protection is enabled.

10.1.15 Hardware and communication requirements

The average total channel delay in each direction is not critical, provided that the total round trip delay is less than four power-system cycles. The jitter is important and needs to be less than ±130 μs in each direction. The effect of a difference in the average delay between one direction and the other depends on the number of terminals. In the case of a two or three-terminal system, the difference is not critical, and can even vary with time. In the case of four or more terminals, variation in the difference limits the sensitivity of the system.

- The allowable margin of 130 μs jitter includes jitter in servicing the interrupt generated by an incoming message. For both incoming and outgoing messages, the important parameter is the jitter between when the time stamp is read and when the message begins to go out or to come in.
- The quality of the crystal driving the clock and software sampling is not critical, because of the compensation provided by the phase and frequency tracking algorithm, unless it is desired to perform under or over frequency protection. From the point of view of current differential protection only, the important parameter is the rate of drift of crystal frequency, which needs to be less than 100 parts per million per minute.
- A 6 MHz clock with a 16-bit hardware counter is adequate, provided that the method described in this document is used for achieving the 32-bit resolution
- An eight-bit time stamp is adequate provided that time-stamp messages are exchanged once per cycle
- A four-bit message sequence number is adequate

Depending on the 87L settings, channel asymmetry (the difference in the transmitting and receiving paths channel delay) cannot be higher than 1 to 1.5 ms if channel asymmetry compensation is not used. However, if the relay detects asymmetry higher than 1.5 ms, the 87L DIFF CH ASYM DET FlexLogic operand is set high and the event and target are raised (if they are enabled in the **CURRENT DIFFERENTIAL** menu) to provide an indication about potential danger.

10.1.16 Online estimate of measurement errors

GE's adaptive elliptical restraint characteristic is a good approximation to the cumulative effects of various sources of error in determining phasors. Sources of error include power system noise, transients, inaccuracy in line charging current computation, current sensor gain, phase and saturation error, clock error, and asynchronous sampling. Errors that can be controlled are driven to zero by the system. For errors that cannot be controlled, all relays compute and sum the error for each source of error for each phase. The relay computes the error caused by power system noise, CT saturation, harmonics, and transients. These errors arise because power system currents are not always exactly sinusoidal. The intensity of these errors varies with time, for example growing during fault conditions, switching operations, or load variations. The system treats these errors as a Gaussian distribution in the real and in the imaginary part of each phasor,

with a standard deviation that is estimated from the sum of the squares of the differences between the data samples and the sine function that is used to fit them. This error has a spectrum of frequencies. Current transformer saturation is included with noise and transient error. The error for noise, harmonics, transients, and current transformer saturation is computed as follows. First, the sum of the squares of the errors in the data samples is computed from the sum of squares information for the present phaselet:

$$\text{SumSquares}_{1_A(k)} = \frac{4}{N}\sum_{p=0}^{N/2-1}\left(i_{1_f_A(k-p)}\right)^2 \qquad \textbf{Eq. 10-28}$$

Then fundamental magnitude is computed as follows for the same phaselet:

$$I_{1_MAG_A} = \sqrt{\left(I_{1_RE_A}\right)^2 + \left(I_{1_IM_A}\right)^2} \qquad \textbf{Eq. 10-29}$$

Finally, the local adaptive restraint term is computed as follows, for each local current:

$$\left(I_{1_ADA_A}\right)^2 = \frac{4}{N}\left(\text{SumSquares}_{1_A(k)} - \left(I_{1_MAG_A}\right)^2\right) \qquad \textbf{Eq. 10-30}$$

Another source of the measurement errors is clock synchronization error, resulting in a clock uncertainty term. The L90 algorithm accounts for two terms of synchronization error corresponding to:

- **Raw clock deviation computed from time stamps** — There are several effects that cause it to not track exactly. First, the ping-pong algorithm inherently produces slightly different estimates of clock deviation at each terminal. Second, because the transmission of time stamps is spread out over several packets, the clock deviation estimate is not up to date with other information it is combined with. Channel asymmetry also contributes to this term. The clock deviation computation is indicated in equation 10.15 as θ_i. If two channels are used, clock deviation is computed for both channels and then the average of absolute values is computed. If GPS compensation is used, then GPS clock compensation is subtracted from the clock deviation.
- **Startup error** — This term is used to estimate the initial startup transient of PFLLs. During startup conditions, a decaying exponential is computed to simulate envelope of the error during startup.

The clock uncertainty is expressed as:

$$\text{clock_unc} = \text{clock_dev} + \text{start_up_error} \qquad \textbf{Eq. 10-31}$$

Eventually, the local clock error is computed as:

$$\text{CLOCK}_A = \frac{(\text{clock_unc})^2}{9}\cdot\left(\left(I_{LOC_RE_A}\right)^2 + \left(I_{LOC_IM_A}\right)^2\right) \qquad \textbf{Eq. 10-32}$$

The local squared adaptive restraint is computed from all local current sources (1 to 4) and is obtained as follows:

$$\left(I_{LOC_ADA_A}\right)^2 = 18\cdot\left(\left(I_{1_ADA_A}\right)^2 + \left(I_{2_ADA_A}\right)^2 + \left(I_{3_ADA_A}\right)^2 + \left(I_{4_ADA_A}\right)^2 + \left(I_{q_ADA_A}\right)^2 + \text{CLOCK}_A\right) \qquad \textbf{Eq. 10-33}$$

10.1.17 CT saturation detection

Current differential protection is inherently dependent on adequate CT performance at all terminals of the protected line, especially during external faults. CT saturation, particularly when it happens at only one terminal of the line, introduces a spurious differential current that can cause the differential protection to misoperate.

The L90 applies a dedicated mechanism to cope with CT saturation and ensure security of protection for external faults. The relay dynamically increases the weight of the square of errors (the so-called 'sigma') portion in the total restraint quantity, but for external faults only. The following logic is applied:

- First, the terminal currents are compared against a threshold of 3 pu to detect overcurrent conditions that can be caused by a fault and can lead to CT saturation

- For all the terminal currents that are above the 3 pu level, the relative angle difference is calculated. If all three terminals see significant current, then all three pairs (1, 2), (2, 3), and (1, 3) are considered and the maximum angle difference is used in further calculations.
- Depending on the angle difference between the terminal currents, the value of sigma used for the adaptive restraint current is increased by the multiple factor of 1, 5, or 2.5 to 5 as shown in the figure. As shown, a factor of 1 is used for internal faults, and a factor of 2.5 to 5 is used for external faults. This allows the relay to be sensitive simultaneously for internal faults and robust for external faults with a possible CT saturation.

If more than one CT is connected to the relay (breaker-and-the half applications), the CT saturation mechanism is executed between the maximum local current against the sum of all others, then between the maximum local and remote currents to select the secure multiplier MULT. A maximum of two (local and remote) is selected and then applied to adaptive restraint.

Figure 10-4: CT saturation adaptive restraint multiplier

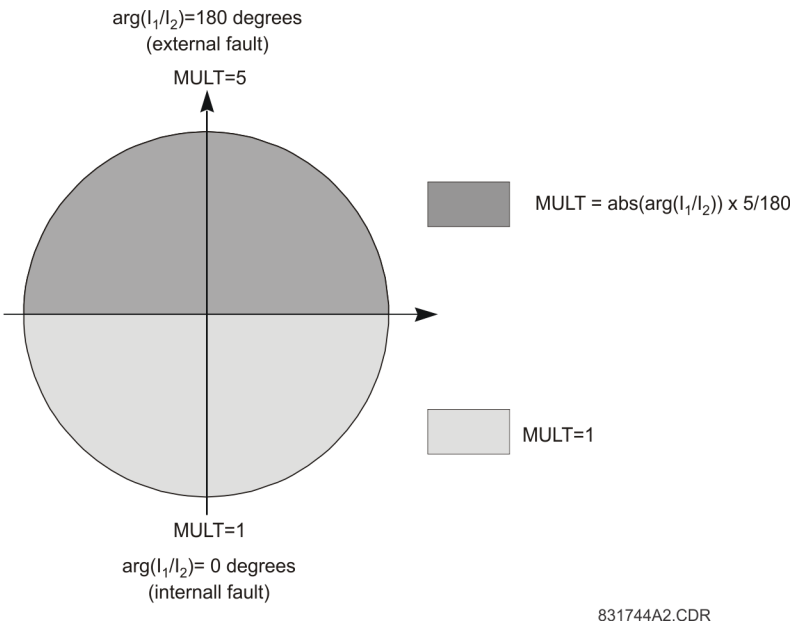

10.1.18 Charging current compensation

The basic premise for the operation of differential protection schemes in general, and of the L90 line differential element in particular, is that the sum of the currents entering the protected zone is zero. In the case of a power system transmission line, this is not entirely true because of the capacitive charging current of the line. For short transmission lines the charging current is a small factor and can therefore be treated as an unknown error. In this application, the L90 can be deployed without voltage sensors and the line charging current is included as a constant term in the total variance, increasing the differential restraint current. For long transmission lines, the charging current is a significant factor and needs to be computed to provide increased sensitivity to fault current.

Compensation for charging current requires the voltage at the terminals be supplied to the relays. The algorithm calculates $I_q = C \times dV/dt$ for each phase, which is then subtracted from the measured currents at both ends of the line. This is a simple approach that provides adequate compensation of the capacitive current at the fundamental power system frequency. Traveling waves on the transmission line are not compensated, and contribute to restraint by increasing the measurement of errors in the data set.

The figures show underlying single-phase models for compensation for two- and three-terminal systems.

Figure 10-5: Terminal transmission line single-phase model for compensation

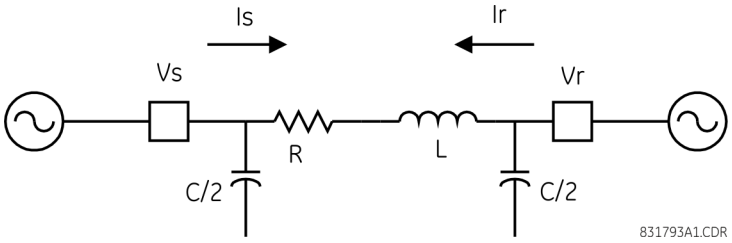

Figure 10-6: Terminal transmission line single-phase model for compensation

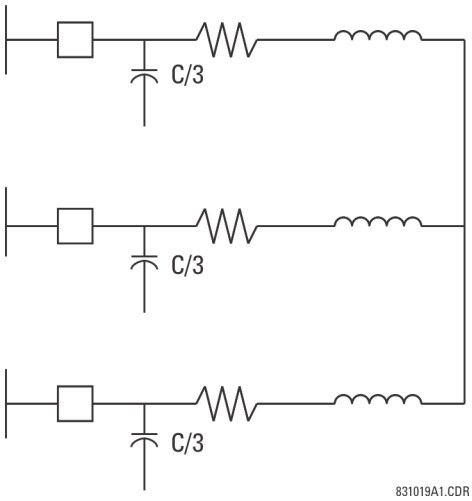

Apportioning the total capacitance among the terminals is not critical for compensating the fundamental power system frequency charging current as long as the total capacitance is correct. Compensation at other frequencies is approximate.

If the VTs are connected in wye, the compensation is accurate for both balanced conditions (that is. all positive, negative and zero sequence components of the charging current are compensated). If the VTs are connected in delta, the compensation is accurate for positive and negative sequence components of the charging current. Since the zero sequence voltage is not available, the L90 cannot compensate for the zero sequence current.

The compensation scheme continues to work with the breakers open, provided that the voltages are measured on the line side of the breakers.

For very long lines, the distributed nature of the line leads to the classical transmission line equations that can be solved for voltage and current profiles along the line. What is needed for the compensation model is the effective positive and zero sequence capacitance seen at the line terminals.

Finally, in some applications the effect of shunt reactors needs to be taken into account. With very long lines shunt reactors can be installed to provide some of the charging current required by the line. This reduces the amount of charging current flowing into the line. In this application, the setting for the line capacitance is the residual capacitance remaining after subtracting the shunt inductive reactance from the total capacitive reactance at the power system frequency.

10.1.19 Differential element characteristics

The differential element is dependent completely on receiving data from the relay at the remote end of the line, therefore, upon startup, the differential element is disabled until the time synchronization system has aligned both relays to a common time base. After synchronization is achieved, the differential is enabled. If the communications channel delay time increases, such as caused by path switching in a SONET system or failure of the communications power supply, the relay acts as outlined in the next section.

The L90 incorporates an adaptive differential algorithm based on the traditional percent differential principle. In the traditional percent differential scheme, the operating parameter is based on the phasor sum of currents in the zone and the restraint parameter is based on the scalar (or average scalar) sum of the currents in the protected zone; when the operating parameter divided by the restraint parameter is above the slope setting, the relay operates. During an external fault, the operating parameter is relatively small compared to the restraint parameter, whereas for an internal fault, the operating parameter is relatively large compared to the restraint parameter. Because the traditional scheme is not adaptive, the element settings must allow for the maximum amount of error anticipated during an out-of-zone fault, when CT errors can be high and/or CT saturation can be experienced.

The major difference between the L90 differential scheme and a percent differential scheme is the use of an estimate of errors in the input currents to increase the restraint parameter during faults, permitting the use of more sensitive settings than those used in the traditional scheme. The inclusion of the adaptive feature in the scheme produces element characteristic equations that appear to be different from the traditional scheme, but the differences are minimal during system steady-state conditions. The element equations are shown in the Operating Condition Calculations section.

10.1.20 Relay synchronization

On startup of the relays, the channel status is checked first. If channel status is OK, all relays send a special "startup" message and the synchronization process is initiated. It takes about five to seven seconds to declare phase and frequency lock loop (PFLL) status as OK and to start performing current differential calculations. If one of the relays is powered off during the operation, the synchronization process restarts from the beginning. Relays tolerate channel delay (resulting sometimes in a step change in communication paths) or interruptions up to four power cycles round trip time (about 66 ms at 60 Hz) without any deterioration in performance. If communications are interrupted for more than four cycles, the following applies:

In two-terminal mode

With a second, redundant channel, relays do not lose functionality at all if the second channel is live. The relay uses a true data redundancy concept where data is sent continuously and simultaneously over both channels. As such there is no channel switching going on. Even if data is lost/corrupted or a channel failed completely, the relay picks the data from the healthy channel immediately and continues providing protection.

With one channel only, relays have a five-second time window. If the channel is restored within this time, it takes about two to three power cycles of valid PFLL calculations (and if estimated error is still within margin) to declare that PFLL is OK. If the channel is restored later than five seconds, PFLL at both relays is declared as failed and the re-synchronization process is initiated (about five to seven seconds) after channel status becomes OK.

In three-terminal mode

If one of the channels fails, the configuration reverts from master-master to master-slave where the master relay has both channels live. The master relay PFLL keeps the two slave relays in synchronization, and therefore there is no time limit for functionality. The PFLL of the slave relays is suspended (that is, the 87L function is not performed at these relays but they can still trip via DTT from the master relay) until the channel is restored. If the estimated error is within margin upon channel restoration and after two to three power cycles of valid PFLL calculations, the PFLL is declared as OK and the configuration reverts back to master-master.

If two channels fail, PFLL at all relays is declared as failed, and when the channels are back in service the resynchronization process is initiated (about five to seven seconds) after channel status becomes OK.

Depending on the system configuration (number of terminals and channels), the 87L function operation depends on the status of channel(s), status of synchronization, and status of channel(s), and channel(s)ID validation. All these states are available as FlexLogic operands, for viewing in actual values, logged in the event recorder (if events are enabled in 87L menu), and also trigger targets (if targets are enabled in the 87L function). These FlexLogic operands can to be used to trigger alarms, illuminate LEDs, and be captured in oscillography.

However, the 87L BLOCKED FlexLogic operand reflects whether the local current differential function is blocked due to communications. The state of this operand is based on the combination of conditions previously outlined. As such, it is recommended that it be used to enable backup protection if 87L is not available.

The 87L DIFF BLOCKED operand is set based on the conditions shown in the figure.

Figure 10-7: Blocking logic

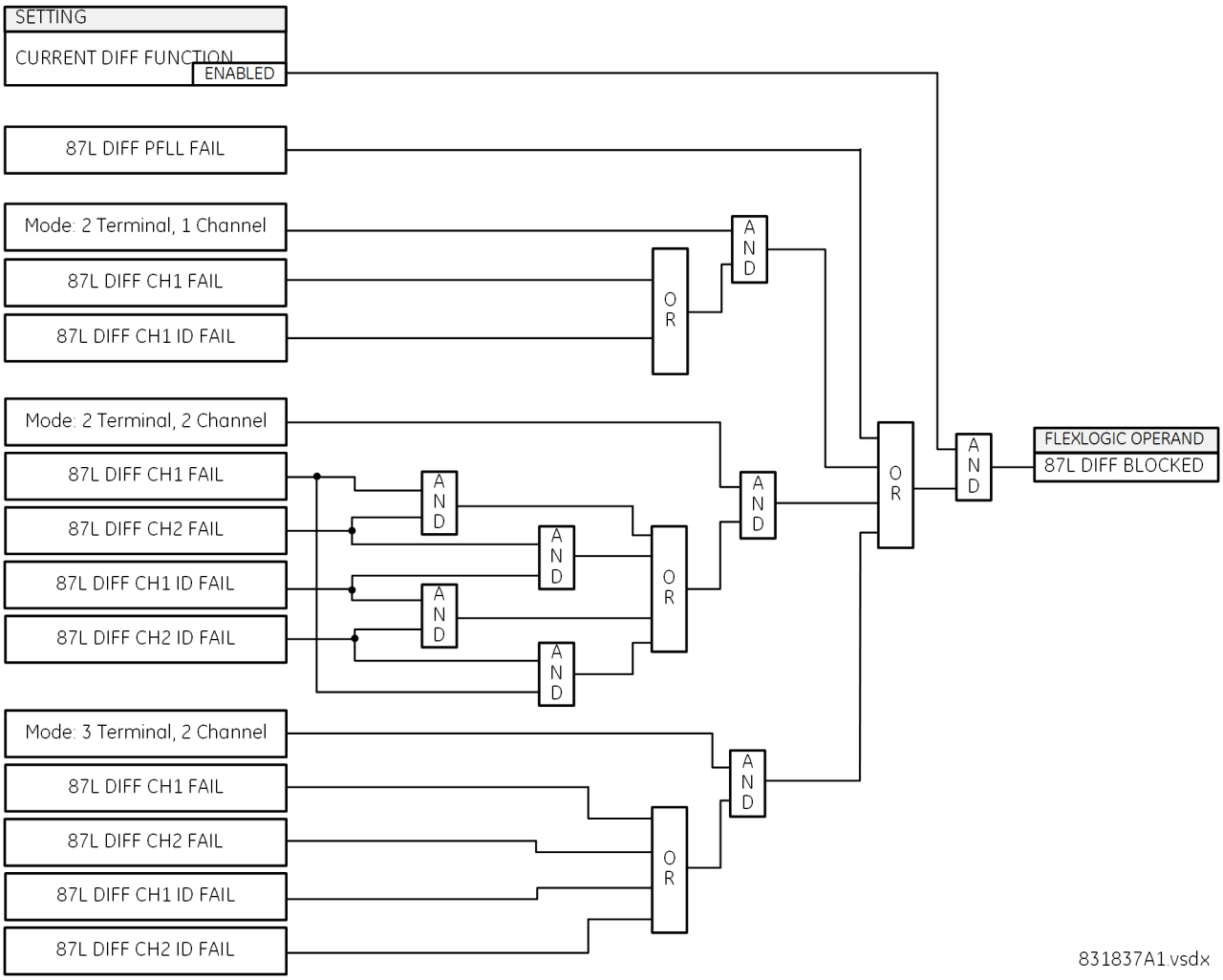

Communication alarms are categorized as major or minor.

The major alarms are CHANNEL FAIL, PFLL FAIL, and CHANNEL ID FAIL. The relay is blocked automatically if any of these conditions occur. Therefore, there is no need to assign these operands to a current differential block setting.

The minor alarms are CRC FAIL and LOST PACKET, which are indicators of a poor or noisy communications channel. If the relay recognizes that a packet is lost or corrupted, the 87L feature is not processed at that protection pass. Instead, it waits for the next valid packet.

The following conditions apply for alarm declaration.

CHANNEL FAIL — Channel is declared failed (assertion of 87L DIFF CHn FAIL) based on the conditions shown in the next figure.

Figure 10-8: Channel fail logic

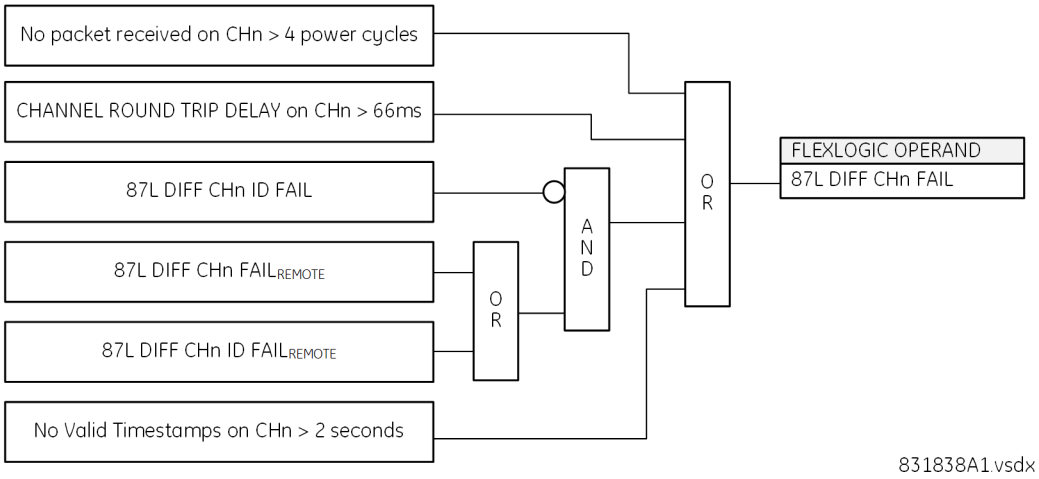

PFFL FAIL — In addition to the conditions explained earlier in the two-terminal and three-terminal mode operation of the relay, the PFLL failure also is declared (operand 87L DIFF PFLL FAIL gets asserted) if clock offset exceeds 1/8th of a power cycle.

CHANNEL ID FAIL — Channel ID failure is declared (operand 87L DIFF CH1 ID FAIL gets asserted) when the relay ID number contained in the packet received from the remote end does not match the programmed ID number at the local relay. This ensures that the data used by the relay is coming from the correct relay.

CRC FAIL — CRC failure for a channel is declared (operand 87L DIFF CH1 CRCFAIL gets asserted) when two or more out of the last eight consecutive packets fail the CRC check. CRC Fail logic is evaluated only after the arrival of eight new packets.

LOST PACKET — Operand 87L DIFF CH1 LOSTPKT gets asserted when two or more of the last eight consecutive packets are lost. Lost Packet logic is evaluated only after the arrival of eight new packets. The accumulated number of lost packets over a channel are available at **ACTUAL VALUES ⇨ STATUS ⇨⇩ CHANNEL TESTS ⇨⇩ CHANNEL 1 LOST PACKETS**.

10.2 Operating condition characteristics

10.2.1 Description

Characteristics of differential elements can be shown in the complex plane. The operating characteristics of the L90 are fundamentally dependent on the relative ratios of the local and remote current phasor magnitudes and the angles of I_{loc} / I_{rem} as shown in the Restraint Characteristics figure.

The main factors affecting the trip-restraint decisions are

- Difference in angles (+ real represents pure internal fault when currents are essentially in phase, – real represents external fault when currents are 180° apart)
- The magnitude of remote current
- The magnitude of the local current
- Dynamically estimated errors in calculations
- Settings

The following figure also shows the capability of the relay to handle weak infeed conditions by increasing the restraint ellipse when the remote current is relatively small (1.5 pu). Therefore, uncertainty is greater when compared with higher remote currents (3 pu). The characteristic shown also depend on settings. The second graph shows how the relay's trip-restraint calculation is made with respect to the variation in angle difference between local and remote currents. The characteristic for three-terminal mode is similar where both remote currents are combined together.

Figure 10-9: Restraint characteristics

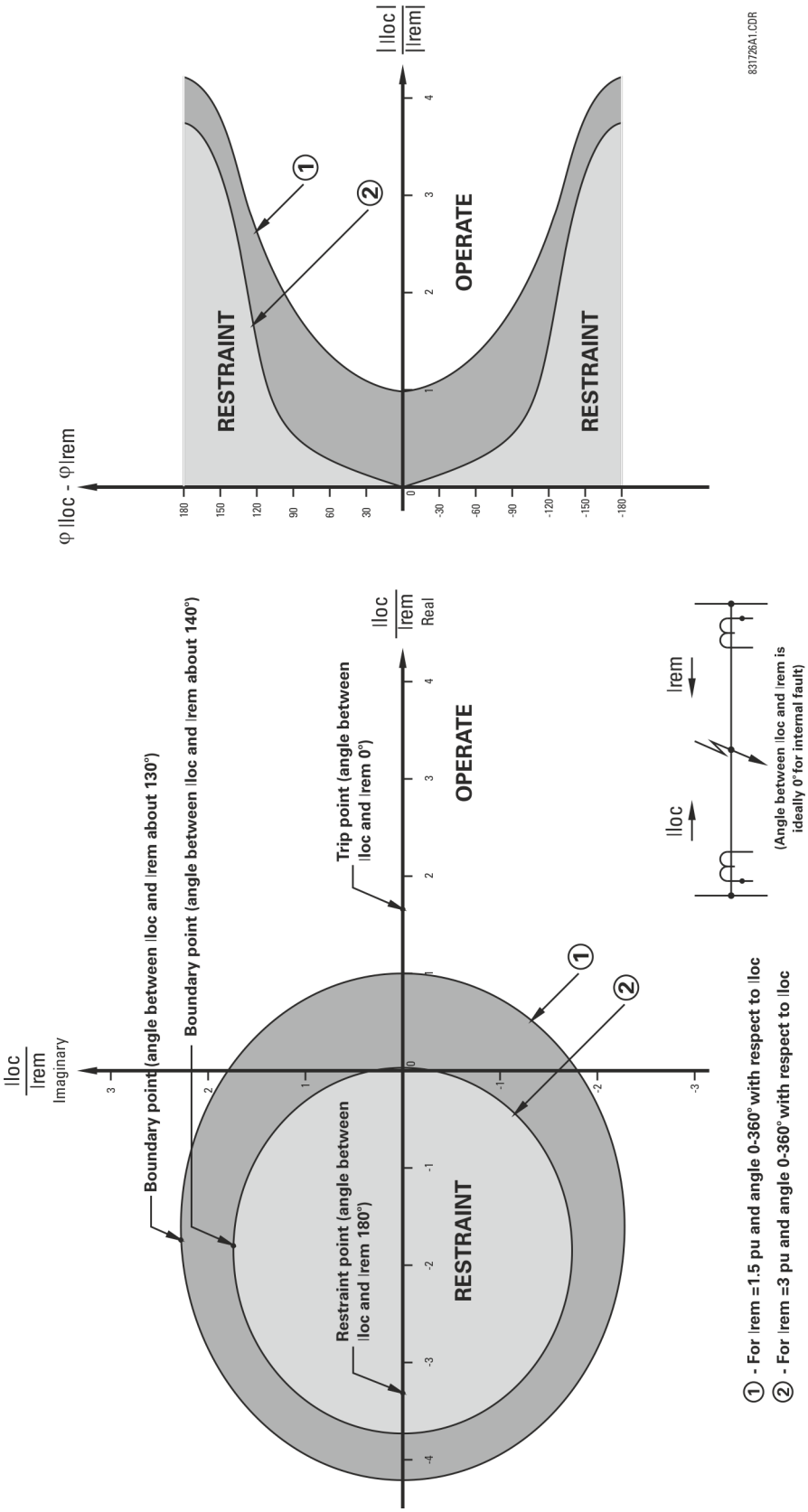

10

10.2.2 Trip decision example

Assume the following settings:

- Slope 1: S_1 = 10%
- Slope 2: S_2 = 10%
- Breakpoint: BP = 5 pu secondary
- Pickup: P = 0.5 pu

Assume the following local and remote currents:

- Local current: I_{local} = 4.0 pu ∠0°
- Remote current: I_{remote} = 0.8 pu ∠180°

The assumed condition is a radial line with a high resistance fault, with the source at the local end only, and through a resistive load current. The operating current is:

$$I_{op}^2 = |I_L + I_R|^2 = |4.0\angle 0° + 0.8\angle 180°|^2 = 10.24 \qquad \textbf{Eq. 10-34}$$

Since the current at both ends is less than the breakpoint value of 5.0, the equation for two-terminal mode is used to calculate restraint as follows:

$$\begin{aligned} I_{Rest}^2 &= (2 \cdot S_1^2 \cdot |I_L|^2) + (2 \cdot S_1^2 \cdot |I_R|^2) + 2P^2 + \sigma \\ &= (2 \cdot (0.1)^2 \cdot |4|^2) + (2 \cdot (0.1)^2 \cdot |0.8|^2) + 2 \cdot (0.5)^2 + 0 \\ &= 0.8328 \end{aligned} \qquad \textbf{Eq. 10-35}$$

where σ = 0, assuming a pure sine wave.

10.2.3 Trip decision test

The trip condition is shown.

$$\frac{I_{Op}^2}{I_{Rest}^2} > 1 \Rightarrow \frac{10.24}{0.8328} = 12.3 > 1 \Rightarrow \text{Trip} \qquad \textbf{Eq. 10-36}$$

The use of the **CURRENT DIFF PICKUP**, **CURRENT DIFF RESTRAINT 1**, **CURRENT DIFF RESTRAINT 2**, and **CURRENT DIFF BREAK PT** settings are discussed in the Current Differential section of the Settings chapter.

The following figure shows how the L90 settings affect the restraint characteristics. The local and remote currents are 180° apart, which represents an external fault. The breakpoint between the two slopes indicates the point where the restraint area is becoming wider to override uncertainties from CT saturation, fault noise, harmonics, and so on. Increasing the slope percentage increases the width of the restraint area.

Figure 10-10: Settings impact on restraint characteristic

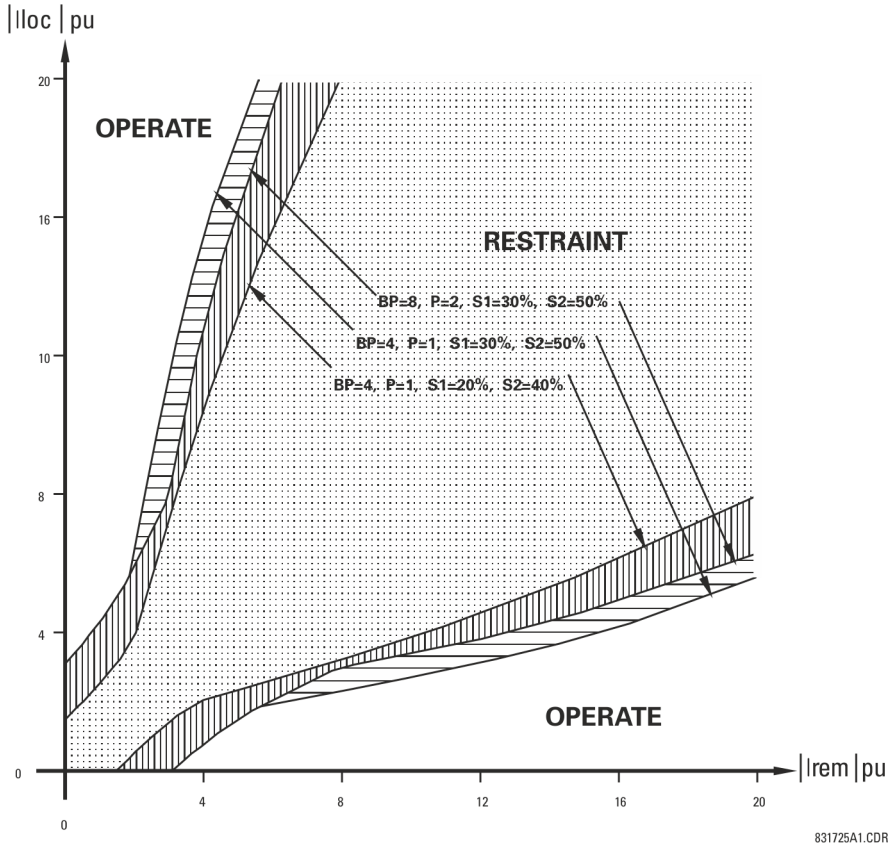

10.3 Distance elements

10.3.1 Introduction

The distance elements use memory voltage for polarization. Additional supervising functions — different for ground and phase distance zones — complement a classical mho characteristic to enhance directional integrity and reach accuracy. Note the following:

- To avoid overreaching during resistive faults under heavy pre-fault load conditions, the ground distance elements utilize a load-adaptive (zero-sequence polarized) reactance characteristic to supervise the base mho characteristic
- Both negative and zero-sequence currents are compared with the memory voltage to enhance directional integrity of the ground distance elements
- It is well-known that ground distance elements, as per the principle of distance relaying, can have limited accuracy during double-line-to-ground faults. In order to prevent maloperation in such cases, the ground elements are blocked by an extra “fault-type comparator” that utilizes the phase angle between the negative- and zero-sequence currents.
- The phase distance elements use reactance and memory polarized directional characteristics to supervise the mho characteristic
- Both ground and phase distance elements have the current supervision functions built-in

The quadrilateral distance characteristic uses the reactance, directional, and current supervising functions as described. Right and left blinders adjustable as to both the resistive and angular positions complete the characteristic.

See the Distance Characteristics section for more information regarding the distance characteristics. The Distance Elements Analysis section includes an example of analysis of the steady-state operation of the distance elements.

The relay provides five zones of distance protection. All zones are identical in terms of settings. However, zone 1 has extra adaptive mechanisms built-in to enhance the transient reach accuracy even when the voltage signals are supplied from poor quality voltage sources such as capacitive voltage transformers (CVTs). Ground zones 2 through 5, in turn, have an extra zero-sequence directional supervision implemented for their time-delayed operation after the memory expires. Consequently, zone 1 is recommended as an underreaching element, and zones 2 through 5 are recommended as overreaching elements and for time-delayed tripping.The relay uses offset ground directional overcurrent functions as an optional supplement of the ground distance protection for pilot-aided schemes. The Ground Directional Overcurrent section describes the elements.

The relay provides for an adaptive distance reach control to cope with the overreaching and sub-synchronous oscillations when applied to, or in a near vicinity of series compensated lines. The Application on Series Compensated Lines section has information.

The distance elements use phase angle comparators to shape their characteristics as described in the Distance Characteristics section. The voltage and current phasors are estimated using optimized techniques as explained in the next section.

10.3.2 Phasor estimation

The relay samples its input AC signals at 64 samples per power system cycle. A fast and accurate frequency tracking mechanism ensures accurate filtering and phasor estimation during off-nominal frequency conditions.

The phasor estimation process for both currents and voltages is based on the commonly used Fourier algorithm. Due to a different nature of signal distortions in the current and voltage signals digital pre-filtering algorithms have been, however, designed and optimized separately for the current and voltage channels.

The current signals are pre-filtered using an improved digital MIMIC filter. The filter removes effectively the DC component(s) guaranteeing transient overshoot below 2% regardless of the initial magnitude and time constant of the DC component(s). The filter has significantly better frequency response for higher frequencies as compared with a classical MIMIC filter. This was possible without introducing any significant phase delay thanks to the high sampling rate used by the relay.

The voltage signals are pre-filtered using a special digital filter designed to cope with CVT transients. The patented filter combines filtering and memory actions enabling the relay to cope with CVT noise under high Source Impedance Ratios (SIRs). The filter controls underestimation of the fault voltage magnitude to less than 1% of the nominal and prevents certain phase angle anomalies that can be encountered under heavy CVT noise and high SIRs.

10.3.3 Distance characteristics

10.3.3.1 Definitions

The relay shapes its distance characteristics using phase angle comparators and voltage and current phasors estimated as described in the previous section.

The following definitions pertain to all of the distance functions:

- I_A, I_B, I_C — Phase A, B, and C current phasors
- I_G — Ground current from a parallel line
- V_A, V_B, V_C — Phase A to ground, phase B to ground, and phase C to ground voltage phasors
- ( )_1 — Positive-sequence phasor of ( ) derived from the phase quantities
- ( )_2 — Negative-sequence phasor of ( ) derived from the phase quantities
- ( )_0 — Zero-sequence phasor of ( ) derived from the phase quantities
- ( )M — Memorized value of ( )
- Z — Reach impedance (**REACH** ∠ **RCA**)
- Z_{REV} — Reverse reach impedance for non-directional applications (**REV REACH** ∠ **REV REACH RCA** + 180°)
- Z_D — Directional characteristic impedance (1 ∠ **DIR RCA**)
- Z_R — Right blinder characteristic impedance: Z_R = **RGT BLD** × sin (**RGT BLD RCA**) × 1∠ (**RGT BLD RCA** – 90°)

10

- Z_L — Left blinder characteristic impedance: Z_L = **LFT BLD** × sin (**LFT BLD RCA**) × 1∠ (**LFT BLD RCA** + 90°)
- K0 — Zero-sequence compensating factor: K0 = (**Z0/Z1 MAG** ∠ **Z0/Z1 ANG**) – 1
- K0M — Mutual zero-sequence compensating factor: K0M = 1/3 x **Z0M/Z1 MAG** ∠ **Z0m/Z1 ANG**
- Θ — Non-homogeneity angle setting (**NON-HOMOGEN ANG**)

10.3.3.2 Directional mho characteristic

The dynamic 100% memory polarized mho characteristic is achieved by checking the angle between

- AB phase element — $(I_A - I_B) \times Z - (V_A - V_B)$ and $(V_A - V_B)_1M$
- BC phase element — $(I_B - I_C) \times Z - (V_B - V_C)$ and $(V_B - V_C)_1M$
- CA phase element — $(I_C - I_A) \times Z - (V_C - V_A)$ and $(V_C - V_A)_1M$
- A ground element — $I_A \times Z + I_0 \times K0 \times Z + I_G \times K0M \times Z - V_A$ and V_A_1M
- B ground element — $I_B \times Z + I_0 \times K0 \times Z + I_G \times K0M \times Z - V_B$ and V_B_1M
- C ground element — $I_C \times Z + I_0 \times K0 \times Z + I_G \times K0M \times Z - V_C$ and V_C_1M

The limit angle of the comparator is adjustable, enabling the user to shape the characteristic as an mho or a lens as shown in the figure. As explained in the Memory Polarization section, the memory-polarized mho characteristic has an excellent directional integrity built-in.

Figure 10-11: Mho (left) and lens (right) characteristics

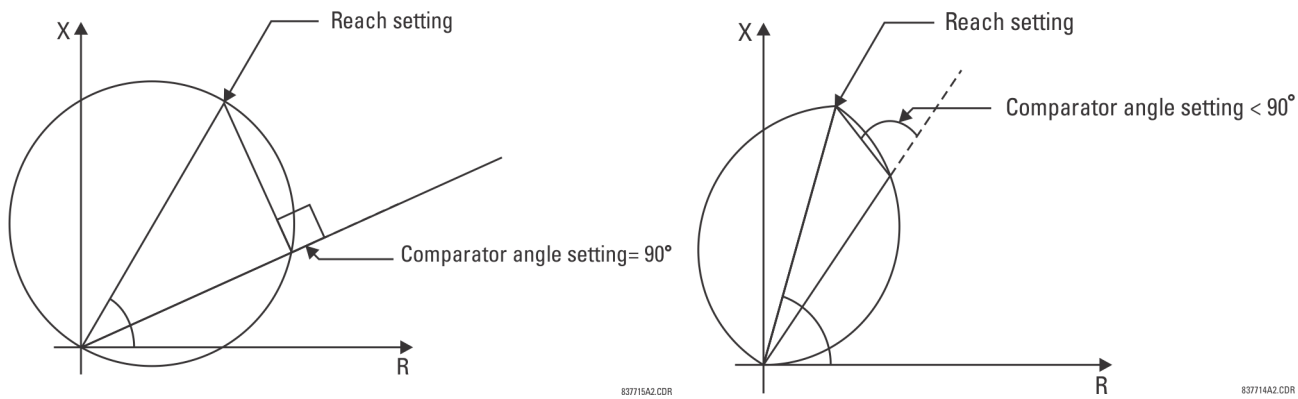

10.3.3.3 Non-directional mho characteristics

The non-directional mho characteristic is achieved by checking the angle between

- AB phase element — $(I_A - I_B) \times Z - (V_A - V_B)$ and $(V_A - V_B) - (I_A - I_B) \times Z_{REV}$
- BC phase element — $(I_B - I_C) \times Z - (V_B - V_C)$ and $(V_B - V_C) - (I_B - I_C) \times Z_{REV}$
- CA phase element — $(I_C - I_A) \times Z - (V_C - V_A)$ and $(V_C - V_A) - (I_C - I_A) \times Z_{REV}$
- A ground element — $I_A \times Z + I_0 \times K0 \times Z + I_G \times K0M \times Z - V_A$ and $V_A - (I_A \times Z_{REV} + I_0 \times K0 \times Z_{REV} + I_G \times K0M \times Z_{REV})$
- B ground element — $I_B \times Z + I_0 \times K0 \times Z + I_G \times K0M \times Z - V_B$ and $V_B - (I_B \times Z_{REV} + I_0 \times K0 \times Z_{REV} + I_G \times K0M \times Z_{REV})$
- C ground element — $I_C \times Z + I_0 \times K0 \times Z + I_G \times K0M \times Z - V_C$ and $V_C - (I_C \times Z_{REV} + I_0 \times K0 \times Z_{REV} + I_G \times K0M \times Z_{REV})$

10.3.3.4 Mho reactance characteristic for directional applications

The reactance characteristic is achieved by checking the angle between

- AB phase element — $(I_A - I_B) \times Z - (V_A - V_B)$ and $(I_A - I_B) \times Z$
- BC phase element — $(I_B - I_C) \times Z - (V_B - V_C)$ and $(I_B - I_C) \times Z$
- CA phase element — $(I_C - I_A) \times Z - (V_C - V_A)$ and $(I_C - I_A) \times Z$
- A ground element — $I_A \times Z + I_0 \times K0 \times Z + I_G \times K0M \times Z - V_A$ and $I_0 \times Z$
- B ground element — $I_B \times Z + I_0 \times K0 \times Z + I_G \times K0M \times Z - V_B$ and $I_0 \times Z$

- C ground element — $I_C \times Z + I_0 \times K0 \times Z + I_G \times K0M \times Z - V_C$ and $I_0 \times Z$

If the mho characteristic is selected, the limit angle of the comparator is adjustable concurrently with the limit angle of the mho characteristic, resulting in a tent shape complementing the lens characteristic being effectively applied.

10.3.3.5 Quadrilateral reactance characteristic for directional applications

The quadrilateral reactance characteristic is achieved by checking the angle between

- AB phase element — $(I_A - I_B) \times Z - (V_A - V_B)$ and $(I_A - I_B) \times Z$
- BC phase element — $(I_B - I_C) \times Z - (V_B - V_C)$ and $(I_B - I_C) \times Z$
- CA phase element — $(I_C - I_A) \times Z - (V_C - V_A)$ and $(I_C - I_A) \times Z$
- A ground element — $I_A \times Z + I_0 \times K0 \times Z + I_G \times K0M \times Z - V_A$ and $(j \times I_0 \text{ or } j \times I_2A) \times e^{j\Theta}$
- B ground element — $I_B \times Z + I_0 \times K0 \times Z + I_G \times K0M \times Z - V_B$ and $(j \times I_0 \text{ or } j \times I_2B) \times e^{j\Theta}$
- C ground element — $I_C \times Z + I_0 \times K0 \times Z + I_G \times K0M \times Z - V_C$ and $(j \times I_0 \text{ or } j \times I_2C) \times e^{j\Theta}$

The ground elements are polarized from either zero-sequence or negative-sequence current as per user-settings to maximize performance in non-homogenous systems. The polarizing current is additionally shifted by the user-selectable non-homogeneity correction angle.

10.3.3.6 Reverse quadrilateral reactance characteristic for non-directional applications

The reverse quadrilateral reactance characteristic is achieved by checking the angle between

- AB phase element — $(I_A - I_B) \times Z_{REV} - (V_A - V_B)$ and $(I_A - I_B) \times Z_{REV}$
- BC phase element — $(I_B - I_C) \times Z_{REV} - (V_B - V_C)$ and $(I_B - I_C) \times Z_{REV}$
- CA phase element — $(I_C - I_A) \times Z_{REV} - (V_C - V_A)$ and $(I_C - I_A) \times Z_{REV}$
- A ground element — $(I_A \times Z_{REV} + I_0 \times K0 \times Z_{REV} + I_G \times K0M \times Z_{REV} - V_A$ and $(j \times I_0 \text{ or } j \times I_2A) \times e^{j(180 + \Theta)}$
- B ground element — $(I_B \times Z_{REV} + I_0 \times K0 \times Z_{REV} + I_G \times K0M \times Z_{REV} - V_B$ and $(j \times I_0 \text{ or } j \times I_2B) \times e^{j(180 + \Theta)}$
- C ground element — $(I_C \times Z_{REV} + I_0 \times K0 \times Z_{REV} + I_G \times K0M \times Z_{REV} - V_C$ and $(j \times I_0 \text{ or } j \times I_2C) \times e^{j(180 + \Theta)}$

The ground elements are polarized from either zero-sequence or negative-sequence current as per user-settings to maximize performance in non-homogenous systems. The polarizing current is additionally shifted by the user-selectable non-homogeneity correction angle.

10.3.3.7 Directional characteristic

The directional characteristic is achieved by checking the angle between

- AB phase element — $(I_A - I_B) \times Z_D$ and $(V_A - V_B)_1M$
- BC phase element — $(I_B - I_C) \times Z_D$ and $(V_B - V_C)_1M$
- CA phase element — $(I_C - I_A) \times Z_D$ and $(V_C - V_A)_1M$
- A ground element — $I_0 \times Z_D$ and V_A_1M
  $I_A_2 \times Z_D$ and V_A_1M
- B ground element — $I_0 \times Z_D$ and V_B_1M
  $I_B_2 \times Z_D$ and V_B_1M
- C ground element — $I_0 \times Z_D$ and V_C_1M
  $I_C_2 \times Z_D$ and V_C_1M

The characteristic and limit angles of the directional comparator are adjustable independently from the mho and reactance comparators. The directional characteristic improves directional integrity of the distance functions.

10.3.3.8 Right blinder characteristic

The right blinder characteristic is achieved by checking the angle between the following signals:

- AB phase element — $(I_A - I_B) \times Z_R - (V_A - V_B)$ and $(I_A - I_B) \times Z_R$
- BC phase element — $(I_B - I_C) \times Z_R - (V_B - V_C)$ and $(I_B - I_C) \times Z_R$

- CA phase element — $(I_C - I_A) \times Z_R - (V_C - V_A)$ and $(I_C - I_A) \times Z_R$
- A ground element — $I_A \times Z_R + I_0 \times K0 \times Z_R + I_G \times K0M \times Z_R - V_A$ and $I_A \times Z_R + I_0 \times K0 \times Z_R + I_G \times K0M \times Z_R$
- B ground element — $I_B \times Z_R + I_0 \times K0 \times Z_R + I_G \times K0M \times Z_R - V_B$ and $I_B \times Z_R + I_0 \times K0 \times Z_R + I_G \times K0M \times Z_R$
- C ground element — $I_C \times Z_R + I_0 \times K0 \times Z_R + I_G \times K0M \times Z_R - V_C$ and $I_C \times Z_R + I_0 \times K0 \times Z_R + I_G \times K0M \times Z_R$

The blinders apply to the Quad characteristic only.

10.3.3.9 Left blinder characteristic

The left blinder characteristic is achieved by checking the angle between the following signals:

- AB phase element — $(I_A - I_B) \times Z_L - (V_A - V_B)$ and $(I_A - I_B) \times Z_L$
- BC phase element — $(I_B - I_C) \times Z_L - (V_B - V_C)$ and $(I_B - I_C) \times Z_L$
- CA phase element — $(I_C - I_A) \times Z_L - (V_C - V_A)$ and $(I_C - I_A) \times Z_L$
- A ground element — $I_A \times Z_L + I_0 \times K0 \times Z_L + I_G \times K0M \times Z_L - V_A$ and $I_A \times Z_L + I_0 \times K0 \times Z_L + I_G \times K0M \times Z_L$
- B ground element — $I_B \times Z_L + I_0 \times K0 \times Z_L + I_G \times K0M \times Z_L - V_B$ and $I_B \times Z_L + I_0 \times K0 \times Z_L + I_G \times K0M \times Z_L$
- C ground element — $I_C \times Z_L + I_0 \times K0 \times Z_L + I_G \times K0M \times Z_L - V_C$ and $I_C \times Z_L + I_0 \times K0 \times Z_L + I_G \times K0M \times Z_L$

The blinders apply to the Quad characteristic only.

10.3.3.10 Fault-type characteristic

The fault-type supervision applies to ground and phase elements and is achieved as follows.

For ground elements by checking the angle between

- A ground element — I_0 and I_A_2
- B ground element — I_0 and I_B_2
- C ground element — I_0 and I_C_2

The limit angle of the comparator is not adjustable and equals 50°. The fault-type characteristic is intended to block the ground distance elements during double-line-to-ground faults. The fault-type supervision is suppressed during open pole conditions.

For phase elements, first voltages and then currents are checked to ensure permission to phase distance for any types of faults except SLG faults. First, the SLG fault type is determined by detecting one phase voltage depressed while two others are not by using the following equation.

$$\begin{aligned} SLG = {} & (VA_LOW \ \&\ NOT\ VB_LOW \ \&\ NOT\ VC_LOW)\ OR \\ & (NOT\ VA_LOW \ \&\ VB_LOW \ \&\ NOT\ VC_LOW)\ OR \\ & (NOT\ VA_LOW \ \&\ NOT\ VB_LOW \ \&\ VC_LOW) \end{aligned} \quad \textbf{Eq. 10-37}$$

where VA_LOW = |V_A + V_0| < 0.98 *|VBC| / $\sqrt{3}$, similarly for B and C phases.

Additionally, the multi-phase fault is determined if at least two phase voltages are below 85% of the nominal:

$$M\text{-}PH = (VA < 0.85pu \ \&\ VB < 0.85\ pu)\ OR\ (VB < 0.85pu \ \&\ VC < 0.85pu)\ OR\ (VC < 0.85\ pu \ \&\ VA < 0.85\ pu) \quad \textbf{Eq. 10-38}$$

Permission is always granted to phase distance by setting FLGAB, FLGBC, and FLGCA flags to logic '1,' unless the following condition is satisfied:

$$PKP_I0 \ \&\ PKP_I2 \ \&\ SLG \ \&\ NOT\ M\text{-}PH \quad \textbf{Eq. 10-39}$$

meaning that if there are negative- and zero-sequence currents present in the fault signal, voltage signatures indicate the presence of the SLG fault and not a multi-phase fault. If at least one of these conditions is not satisfied, permission continues to be granted to all phase distance loops.

But in case this condition is satisfied, angles between I_0 and I_2 are additionally checked to still grant permission to the phase distance loops, shown as follows for the ABC rotation:

If | ang(I_0) - ang(I_2) + 120° | < 70°, then FLGAB = 1

If | ang(I_0) - ang(I_2)+240° | < 70°, then FLGCA = 1

If | ang(I_0) - ang(I_2) | < 70°, then FLGBC = 1

Phase distance fault type supervision is suppressed during open pole conditions and for delta connected VTs.

Phase distance fault type supervision can be enabled/disabled through **SETTINGS ⇨⇩ GROUPED ELEMENTS ⇨ SETTING GROUP 1(6) ⇨⇩ DISTANCE ⇨⇩ PH DIST PH SELECT SUPV** and is applied to phase distance zone 1 to zone 3 only. G60 and L60 relays do not employ fault type supervision for the phase distance in all zones.

10.3.3.11 Zero-sequence directional characteristic

The extra zero-sequence characteristic applies to ground zones 2 and higher and is achieved by checking angles between:

- A ground element — $I_0 \times Z_D$ and $-V_0$
- B ground element — $I_0 \times Z_D$ and $-V_0$
- C ground element — $I_0 \times Z_D$ and $-V_0$

The limit angle of the comparator is not adjustable and equals 90°. The zero-sequence directional characteristic improves directional integrity for time-delayed operations after the memory expires.

10.3.3.12 Overcurrent supervision

The overcurrent supervision responds to the following currents:

- AB phase element — $(I_A - I_B) / \sqrt{3}$
- BC phase element — $(I_B - I_C) / \sqrt{3}$
- CA phase element — $(I_C - I_A) / \sqrt{3}$
- A, B, C ground element — $|3 \times I_0 - 0.05 \times I_1|$

The following tables summarize the characteristics of the distance elements.

Table 10-1: Directional mho phase distance functions

Characteristic	Comparator inputs		Limit angle
Variable mho	I × Z – V	V_1M	COMP LIMIT
Reactance	I × Z – V	I × Z	COMP LIMIT
Directional	I × ZD	V_1M	DIR COMP LIMIT
Fault type	NOT SLG	See the Fault Type Characteristic section	Removed during open pole conditions

Table 10-2: Directional mho ground distance functions

Characteristic	Comparator inputs		Limit angle
Variable mho	I × Z – V	V_1M	COMP LIMIT
Reactance	I × Z – V	$I_0 \times Z$	COMP LIMIT
Directional	$I_0 \times Z_D$	V_1M	DIR COMP LIMIT
Directional	$I_2 \times Z_D$	V_1M	DIR COMP LIMIT (removed when 3I_0 > OC SUPV and I_2 < CUTOFF)
Fault-type	I_0	I_2	50° (removed during open pole conditions or when 3I_0 > OC SUPV and I_2 < CUTOFF)
Zero-sequence	$I_0 \times Z_D$	–V_0	90° (zones 2 and higher only; removed for zones 2 and higher during open pole conditions)

Table 10-3: Directional quadrilateral phase distance functions

Characteristic	Comparator inputs		Limit angle
Reactance	I × Z – V	I × Z	COMP LIMIT
Directional	$I \times Z_D$	V_1M	DIR COMP LIMIT
Right Blinder	$I \times Z_R - V$	$I \times Z_R$	90°
Left Blinder	$I \times Z_L - V$	$I \times Z_L$	90°
Fault type	NOT SLG	See the Fault Type Characteristic section	Removed during open pole conditions

Table 10-4: Directional quadrilateral ground distance functions

Characteristic	Comparator inputs		Limit angle
Reactance	$I \times Z - V$	$j \times I_0 \times e^{j\Theta}$ or $j \times I_2 \times e^{j\Theta}$	COMP LIMIT
Directional	$I_0 \times Z_D$	V_1M	DIR COMP LIMIT
Directional	$I_2 \times Z_D$	V_1M	DIR COMP LIMIT (removed when 3I_0 > OC SUPV and I_2 < CUTOFF)
Right Blinder	$I \times Z_R - V$	$I \times Z_R$	90°
Left Blinder	$I \times Z_L - V$	$I \times Z_L$	90°
Fault-type	I_0	I_2	50° (removed during open pole conditions or when 3I_0 > OC SUPV and I_2 < CUTOFF)
Zero-sequence	$I_0 \times Z_D$	–V_0	90° (zones and higher only; removed for zones 2 and higher during open pole conditions)

Table 10-5: Non-directional mho phase distance functions

Characteristic	Comparator inputs		Limit angle
Offset mho	$I \times Z - V$	$V\text{-}I \times Z_{REV}$	COMP LIMIT
Fault type	NOT SLG	See the Fault Type Characteristic section	Removed during open pole conditions

Table 10-6: Non-directional mho ground distance functions

Characteristic	Comparator inputs		Limit angle
Offset mho	$I \times Z - V$	$V\text{-}I \times Z_{REV}$	COMP LIMIT
Fault-type	I_0	I_2	50° (removed during open pole conditions or when 3I_0 > OC SUPV and I_2 < CUTOFF)

Table 10-7: Non-directional quadrilateral phase distance functions

Characteristic	Comparator inputs		Limit angle
Forward Reactance	$I \times Z - V$	$I \times Z$	COMP LIMIT
Reverse Reactance	$I \times Z_{REV} - V$	$I \times Z_{REV}$	COMP LIMIT
Right Blinder	$I \times Z_R - V$	$I \times Z_R$	90°
Left Blinder	$I \times Z_L - V$	$I \times Z_L$	90°
Fault type	NOT SLG	See the Fault Type Characteristic section	Removed during open pole conditions

Table 10-8: Non-directional quadrilateral ground distance functions

Characteristic	Comparator inputs		Limit angle
Forward Reactance	$I \times Z - V$	$j \times I_0 \times e^{j\Theta}$ or $j \times I_2 \times e^{j\Theta}$	COMP LIMIT
Reverse Reactance	$I \times Z_{REV} - V$	$-j \times I_0 \times e^{j\Theta}$ or $-j \times I_2 \times e^{j\Theta}$	COMP LIMIT
Right Blinder	$I \times Z_R - V$	$I \times Z_R$	90°
Left Blinder	$I \times Z_L - V$	$I \times Z_L$	90°
Fault-type	I_0	I_2	50° (removed during open pole conditions or when 3I_0 > OC SUPV and I_2 < CUTOFF)

10.3.4 Fast distance algorithm

In order to improve operating speed of the phase and ground distance zone 1 and zone 2 elements under CVT transient conditions for high SIRs up to 60, a fast distance algorithm is implemented in the relay. This algorithm uses a weighted average digital filtering technique and runs in parallel with a regular distance algorithm, which uses a fixed digital CVT filtering technique. The fast distance algorithm applies the same comparators as a regular distance algorithm.

The fast distance algorithm is activated upon detection of the system disturbance and is active for three cycles only. The pickup and operate operands of the fast distance elements are internally OR-ed with regular distance elements, to achieve integrated distance element optimal operating speed.

Note that fast distance is not active for the following applications:

- Use of the dynamic reach control for series-compensated line applications by selecting a non-zero value for the voltage level setting in the **Distance** elements
- Non-directional option for the zone 1 and 2 **Direction** setting
- Phase Distance applications through power transformers, when the **XFMR VOL CONNECTION** or **XFMR CUR CONNECTION** setting is other than "None"

10.3.5 Memory polarization

All distance functions use memory polarization. The positive-sequence voltage, either memorized or actual, is used as a polarizing signal. The memory is established when the positive-sequence voltage remains above 80% of its nominal value for five power system cycles. The memory voltage is a two-cycle old voltage.

Once established, the memory is applied for the user-specified time interval. The memory timer is started when the voltage drops below 80% of nominal or when the user-programmable condition is asserted to force memory polarization. After the memory expires, the relay checks the magnitude of the actual positive-sequence voltage. If it is higher than 10% of nominal, the actual voltage is used; if lower, the memory voltage continues to be used.

A provision is added to force self-polarization from any user-programmable condition.

The memory-polarized mho has an extra directional integrity built-in as shown in the figure. The self-polarized mho characteristic is shifted in the reverse direction for a forward fault by an amount proportional to the source impedance, and in the forward direction for a reverse fault.

Figure 10-12: Dynamic shift of the mho characteristic

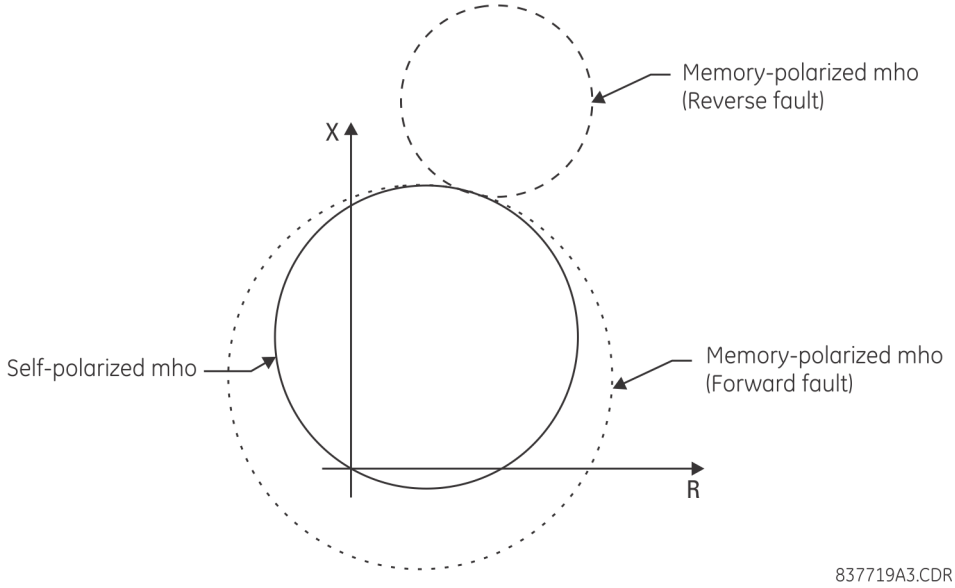

The same desirable effect of memory polarization applies to the directional comparator of the quadrilateral characteristic.

Figure 10-13: Dynamic shift of the memory-polarized directional characteristic

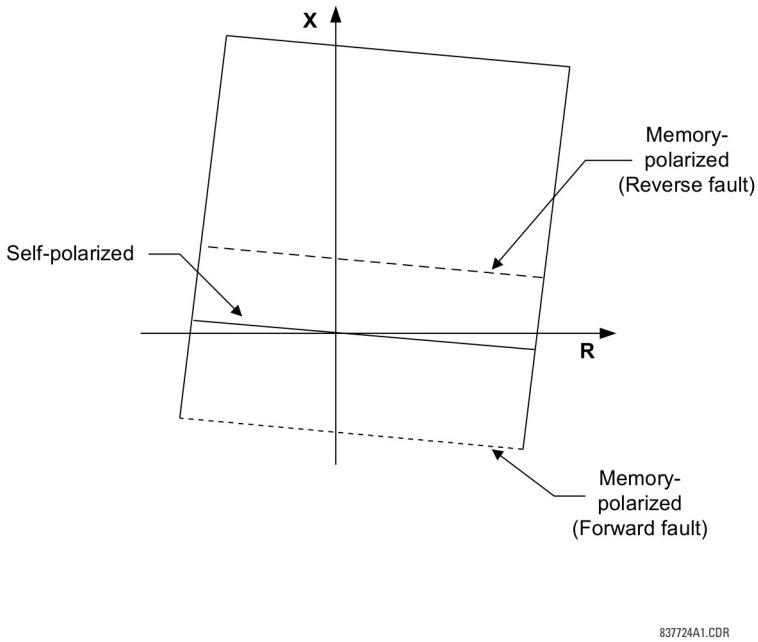

Mutual zero-sequence compensation can raise concerns regarding directional integrity on reverse faults in the situation when the relay gets "overcompensated." This problem does not affect the L90 because its ground distance elements use zero-sequence and negative-sequence currents in extra directional comparators. Both the currents are from the protected line and are not affected by any compensation as the latter applies only to the reach defining comparators: the mho, reactance, and blinder characteristics.

10.3.6 Distance elements analysis

10.3.6.1 Description

This subsection shows how to analyze the operation of the distance elements in steady states using the results of short circuit studies. All quantities are secondary ohms, volts, and amperes. Ground phase A and phase AB distance elements are analyzed.

Assume that the following settings have been entered:

Phase Rotation: ABC
Right Blinder Reach: 10 Ω
Nominal Secondary Voltage: 69.28 V
Right Blinder RCA: 88°
Distance Reach: 14 Ω
Left Blinder Reach: 5 Ω
Distance RCA: 88°
Left Blinder RCA: 88°
Polarizing Current: Zero-sequence
Non-Homogeneity Correction Angle: 3°
Directional RCA: 88°
Z0/Z1 Magnitude: 4.55
Overcurrent supervision: 3 A
Z0/Z1 Angle: –12°
Distance Comparator limit angle: 75°

Z0M/Z1 Magnitude: 0

Directional Comparator limit angle: 75°

Assume that the following signals are injected to the relay:

V_A = 64.71 V ∠0.0° (pre-fault)

V_A = 25.43 V ∠–19.9°

V_B = 80.22 V ∠–133.5°

V_C = 77.33 V ∠135.7°

I_A = 4.47 A ∠–107.8°

I_B = 2.92 A ∠68.9°

I_C = 2.93 A ∠–51.1°

Based on the entered setting the relay calculates:

K0 = 3.58 ∠–15.2°

K0M = 0

Z = 14.00 Ω ∠88°

Z_D = 1 Ω ∠88°

Z_R = 9.99 Ω ∠–2°

Z_L = 4.99 Ω ∠178°

For the assumed steady-state injection the relay calculates:

VA_1 = 58.83 V ∠–2.1°

VA_1M = 64.71 V ∠0.0°

I_0 = 1.37 A ∠–68.2°

IA_2 = 1.37 A ∠–68.1°

–V_0 = 29.18 V ∠8.4°

$(V_A–V_B)$_1 = 93.35 V ∠32.0°

$(V_A–V_B)$_1M = 112.08 V ∠30.0°

$I_A–I_B$ = 7.39 A ∠–109.1°

10.3.6.2 Mho phase A to ground element (before memory expires)

$I_A \times Z + I_0 \times K0 \times Z + I_A \times K0M \times Z - V_A$ = 103.33 V ∠–3.9°

V_A_1M = 64.71 V ∠0.0°

I_A_2 × Z_D = 1.37 V ∠19.8°

I_0 × Z = 19.11 V ∠19.8°

I_0 × Z_D = 1.37 V ∠19.8°

- Overcurrent supervision: | 3 × I_0 | = 4.09 A > 3 A
- Mho difference angle = | –3.9° – 0° | = 3.9° < 75°
- Reactance difference angle = | –3.9° – 19.8° | = 23.7° < 75°
- Zero-sequence directional difference angle = | 19.8° – 0.0° | = 19.8° < 75°
- Negative-sequence directional difference angle = | 19.8° – 0.0° | = 19.8° < 75°
- Fault-type comparator difference angle = | 19.8° – 19.8° | = 0.0° < 50°

All four comparators and the overcurrent supervision are satisfied, so the MHO phase A ground element operates for this fault.

10.3.6.3 Mho phase A to ground element (after memory expires)

After the memory expires, the relay checks the actual positive-sequence voltage and compares it with 10% of the nominal voltage:

| V_A_1 | = 58.83 V > 0.1 × 69.28 V

After the memory expires the relay uses the actual voltage for polarization.

$I_A \times Z + I_0 \times K0 \times Z + I_G \times K0M \times Z - V_A = 103.33\ V\ \angle -3.9°$

$V_A_1 = 58.83\ V\ \angle -2.1°$

$I_A_2 \times Z_D = 1.37\ V\ \angle 19.8°$

$I_0 \times Z = 19.11\ V\ \angle 19.8°$

$I_0 \times Z_D = 1.37\ V\ \angle 19.8°$

- Overcurrent supervision = | 3 × I_0 | = 4.09 A > 3 A
- Mho difference angle = | –3.9° – (–2.1°) | = 1.8° < 75°
- Reactance difference angle = | –3.9° – 19.8° | = 23.7° < 75°
- Zero-sequence directional difference angle = | 19.8° – (–2.1°) | = 21.9° < 75°
- Negative-sequence directional difference angle = | 19.8° – (–2.1°) | = 21.9° < 75°
- Fault-type comparator difference angle = | 19.8° – 19.8° | = 0.0° < 50°

All four comparators and the overcurrent supervision are satisfied, so the Zone 1 MHO phase A ground element operates for this fault.

- Zero-sequence directional difference angle for zones 2 and higher (phase A) = | 19.8° – 8.4° | = 11.4° < 90°

Zones 2 and higher phase A ground elements pick-up, time-out, and operate.

10.3.6.4 Mho AB phase element

$(I_A - I_B) \times Z - (V_A - V_B) = 88.65\ V\ \angle -78.7°$

$(V_A - V_B)_1M = 112.08\ V\ \angle 30.0°$

$(I_A - I_B) \times Z = 103.50\ V\ \angle -21.2°$

$(I_A - I_B) \times Z_D = 7.39\ V\ \angle -21.2°$

- Overcurrent supervision: $|(I_A - I_B) / \sqrt{3}| = 4.27\ A > 3\ A$
- Mho difference angle = | –78.7° – 30.0° | = 108.7° > 75°
- Reactance difference angle = | –78.7° – (–21.2°) | = 57.5° < 75°
- Directional difference angle = | –21.2° – 30.0° | = 51.2° < 75°

The mho comparator is not satisfied, so the MHO AB phase element does not operate for this fault.

Repeating this analysis, one concludes that out of the six distance elements only the ground element in phase A operates for this fault.

10.3.6.5 Quad phase A to ground element (before memory expires)

$I_A \times Z + I_0 \times K0 \times Z + I_G \times K0M \times Z - V_A = 103.33\ V\ \angle -3.9°$

$V_A_1M = 64.71\ V\ \angle 0.0°$

$j \times I_0 \times e^{j3} = 1.37\ A\ \angle 24.8°$

$I_A_2 \times Z_D = 1.37\ V\ \angle 19.8°$

$I_0 \times Z_D = 1.37\ V\ \angle 19.8°$

$I_A \times Z_R + I_0 \times K0 \times Z_R + I_G \times K0M \times Z_R - V_A = 87.6\ V\ \angle -109.2°$

$I_A \times Z_R + I_0 \times K0 \times Z_R = 91.5\ V\ \angle -93.0°$

$I_A \times Z_L + I_0 \times K0 \times Z_L + I_G \times K0M \times Z_L - V_A = 57.0\ V\ \angle 108.7°$

$I_A \times Z_L + I_0 \times K0 \times Z_L = 45.8\ V\ \angle 82.9°$

- Overcurrent supervision: | 3 × I_0 | = 4.09 A > 3 A
- Reactance difference angle = | –3.9° – 24.8° | = 28.7° < 75°
- Zero-sequence difference angle = | –19.8° – 0.0° | = 19.8° < 75°
- Negative-sequence directional difference angle = | –19.8° – 0.0° | = 19.8° < 75°

- Right blinder difference angle = | –93.0° – (–109.2°) | = 16.2° < 90°
- Left blinder difference angle = | 82.9° – 108.7° | = 25.8° < 90°
- Fault-type comparator difference angle = | 19.8° – 19.8° | = 0.0° < 50°

All six comparators and the overcurrent supervision are satisfied, so the Quad Phase A ground element operates for this fault.

10.4 Phase distance applied to power transformers

10.4.1 Description

As a Wye-Delta transformer introduces discontinuity for the zero-sequence circuit, the ground distance protection cannot be applied, except special circumstances, to respond to faults behind the transformer.

The phase distance elements, however, can be developed so that both accurate reach and correct fault phase identification is retained for faults behind the power transformer as seen from the relaying point. Without appropriate compensation, the reach of the relay depends on a type of fault, creating considerable difficulties in applying the relay.

The L90 provides for any location of the VTs and CTs with respect to the involved power transformer and the direction of any given zone.

In the following equations, the VT and CT locations are referenced as “None” if the transformer is not present between the CT/VT and the intended reach point. Otherwise, the location is to be selected as a type of a transformer as seen from the VT/CT position towards the intended reach point. The following figure explains the adopted rules.

Figure 10-14: Applications of the "PHS DIST XF MR VOL/CUR CONNECTION" settings

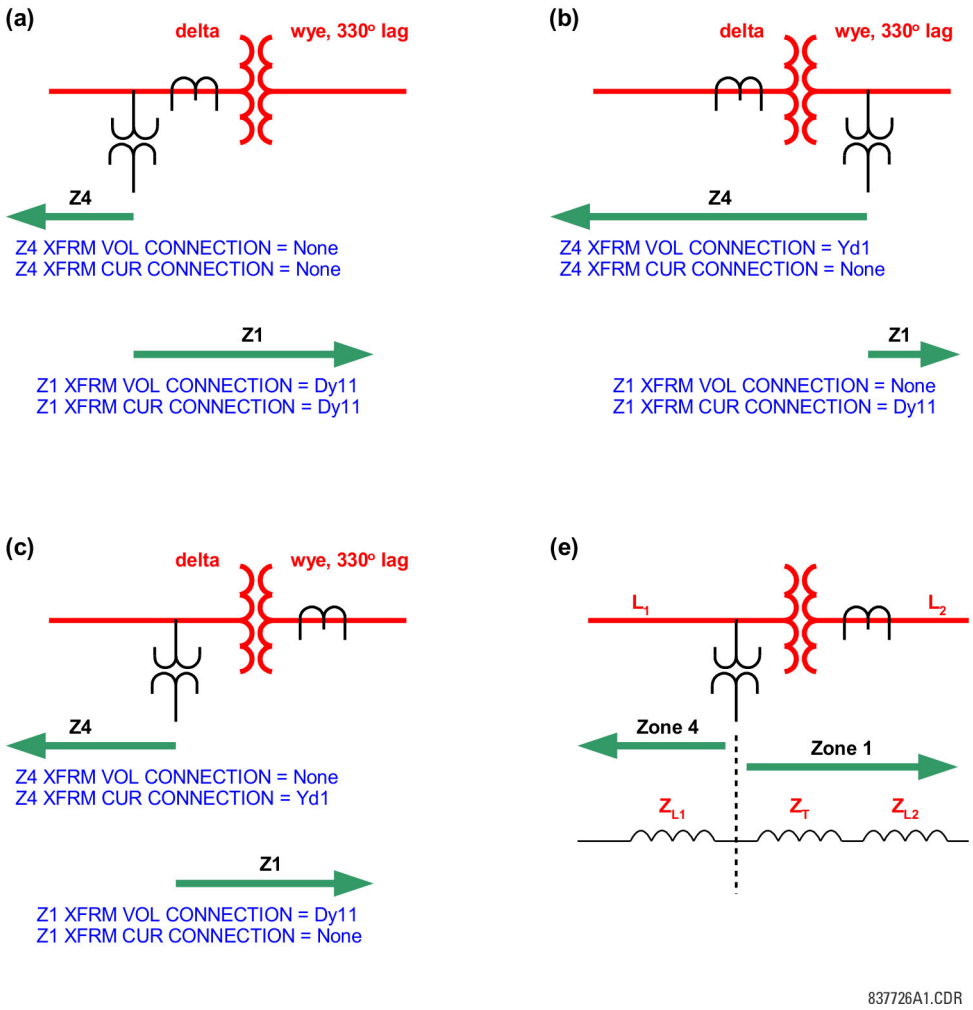

Table 10-9: Phase distance input signals for delta-wye transformers

Transformer connection	Loop	Current transformation	Voltage transformation
None	AB	$I_A - I_B$	V_{AB}
	BC	$I_B - I_C$	V_{BC}
	CA	$I_C - I_A$	V_{CA}
Dy1	AB	$\sqrt{3} I_A$	$\frac{1}{\sqrt{3}}(V_{AB} - V_{CA})$
	BC	$\sqrt{3} I_B$	$\frac{1}{\sqrt{3}}(V_{BC} - V_{AB})$
	CA	$\sqrt{3} I_C$	$\frac{1}{\sqrt{3}}(V_{CA} - V_{BC})$
Dy3	AB	$I_{AB_21P} = -\sqrt{3} I_C$	$V_{AB_21P} = \frac{1}{\sqrt{3}}(V_{BC} - V_{CA})$
	BC	$I_{BC_21P} = -\sqrt{3} I_A$	$V_{BC_21P} = \frac{1}{\sqrt{3}}(V_{CA} - V_{AB})$
	CA	$I_{CA_21P} = -\sqrt{3} I_B$	$V_{CA_21P} = \frac{1}{\sqrt{3}}(V_{AB} - V_{BC})$
Dy5	AB	$I_{AB_21P} = \sqrt{3} I_B$	$V_{AB_21P} = \frac{1}{\sqrt{3}}(V_{BC} - V_{AB})$
	BC	$I_{BC_21P} = \sqrt{3} I_C$	$V_{BC_21P} = \frac{1}{\sqrt{3}}(V_{CA} - V_{BC})$
	CA	$I_{CA_21P} = \sqrt{3} I_A$	$V_{CA_21P} = \frac{1}{\sqrt{3}}(V_{AB} - V_{CA})$
Dy7	AB	$I_{AB_21P} = -\sqrt{3} I_A$	$V_{AB_21P} = \frac{1}{\sqrt{3}}(V_{CA} - V_{AB})$
	BC	$I_{BC_21P} = -\sqrt{3} I_B$	$V_{BC_21P} = \frac{1}{\sqrt{3}}(V_{AB} - V_{BC})$
	CA	$I_{CA_21P} = -\sqrt{3} I_C$	$V_{CA_21P} = \frac{1}{\sqrt{3}}(V_{BC} - V_{CA})$
Dy9	AB	$I_{AB_21P} = \sqrt{3} I_C$	$V_{AB_21P} = \frac{1}{\sqrt{3}}(V_{CA} - V_{BC})$
	BC	$I_{BC_21P} = \sqrt{3} I_A$	$V_{BC_21P} = \frac{1}{\sqrt{3}}(V_{AB} - V_{CA})$
	CA	$I_{CA_21P} = \sqrt{3} I_B$	$V_{CA_21P} = \frac{1}{\sqrt{3}}(V_{BC} - V_{AB})$

Transformer connection	Loop	Current transformation	Voltage transformation
Dy11	AB	$I_{AB_21P} = -\sqrt{3}I_B$	$V_{AB_21P} = \frac{1}{\sqrt{3}}(V_{AB} - V_{BC})$
	BC	$I_{BC_21P} = -\sqrt{3}I_C$	$V_{BC_21P} = \frac{1}{\sqrt{3}}(V_{BC} - V_{CA})$
	CA	$I_{CA_21P} = -\sqrt{3}I_A$	$V_{CA_21P} = \frac{1}{\sqrt{3}}(V_{CA} - V_{AB})$
Yd1	AB	$I_{AB_21P} = \frac{1}{\sqrt{3}}(2I_A - I_B - I_C)$	$V_{AB_21P} = \sqrt{3}V_A$
	BC	$I_{BC_21P} = \frac{1}{\sqrt{3}}(2I_B - I_A - I_C)$	$V_{BC_21P} = \sqrt{3}V_B$
	CA	$I_{CA_21P} = \frac{1}{\sqrt{3}}(2I_C - I_A - I_B)$	$V_{CA_21P} = \sqrt{3}V_C$
Yd3	AB	$I_{AB_21P} = \frac{1}{\sqrt{3}}(I_A + I_B - 2I_C)$	$V_{AB_21P} = -\sqrt{3}V_C$
	BC	$I_{BC_21P} = \frac{1}{\sqrt{3}}(I_B + I_C - 2I_A)$	$V_{BC_21P} = -\sqrt{3}V_A$
	CA	$I_{CA_21P} = \frac{1}{\sqrt{3}}(I_A + I_C - 2I_B)$	$V_{CA_21P} = -\sqrt{3}V_B$
Yd5	AB	$I_{AB_21P} = \frac{1}{\sqrt{3}}(2I_B - I_A - I_C)$	$V_{AB_21P} = \sqrt{3}V_B$
	BC	$I_{BC_21P} = \frac{1}{\sqrt{3}}(2I_C - I_A - I_B)$	$V_{BC_21P} = \sqrt{3}V_C$
	CA	$I_{CA_21P} = \frac{1}{\sqrt{3}}(2I_A - I_B - I_C)$	$V_{CA_21P} = \sqrt{3}V_A$
Yd7	AB	$I_{AB_21P} = \frac{1}{\sqrt{3}}(I_B + I_C - 2I_A)$	$V_{AB_21P} = -\sqrt{3}V_A$
	BC	$I_{BC_21P} = \frac{1}{\sqrt{3}}(I_A + I_C - 2I_B)$	$V_{BC_21P} = -\sqrt{3}V_B$
	CA	$I_{CA_21P} = \frac{1}{\sqrt{3}}(I_A + I_B - 2I_C)$	$V_{CA_21P} = -\sqrt{3}V_C$
Yd9	AB	$I_{AB_21P} = \frac{1}{\sqrt{3}}(2I_C - I_A - I_B)$	$V_{AB_21P} = \sqrt{3}V_C$
	BC	$I_{BC_21P} = \frac{1}{\sqrt{3}}(2I_A - I_B - I_C)$	$V_{BC_21P} = \sqrt{3}V_A$
	CA	$I_{CA_21P} = \frac{1}{\sqrt{3}}(2I_B - I_A - I_C)$	$V_{CA_21P} = \sqrt{3}V_B$

Transformer connection	Loop	Current transformation	Voltage transformation
Yd11	AB	$I_{AB_21P} = \frac{1}{\sqrt{3}}(I_A + I_C - 2I_B)$	$V_{AB_21P} = -\sqrt{3}V_B$
	BC	$I_{BC_21P} = \frac{1}{\sqrt{3}}(I_A + I_B - 2I_C)$	$V_{BC_21P} = -\sqrt{3}V_C$
	CA	$I_{CA_21P} = \frac{1}{\sqrt{3}}(I_B + I_C - 2I_A)$	$V_{CA_21P} = -\sqrt{3}V_A$

Equations from the "Current Transformation" and "Voltage Transformation" columns are used to derive inputs to the three (AB, BC, and CA) phase distance elements. For example, if the CTs are located at the delta side of the Delta-Wye 11 transformer, and a given zone is set to look through the transformer into the system connected to the Wye winding, the CT location setting for that zone is set to Dy11 and the relay uses $-\sqrt{3}I_B$ instead of a traditional I_A - I_B for the AB phase distance element.

The current supervision pickup setting applies to the currents specified in the "Current Transformation" columns.

A distance zone originates at the location of the VTs (regardless of the location of the CTs). For information on settings, see the Application of Settings chapter.

10.4.2 Example

Consider the system shown.

Figure 10-15: Sample system configuration

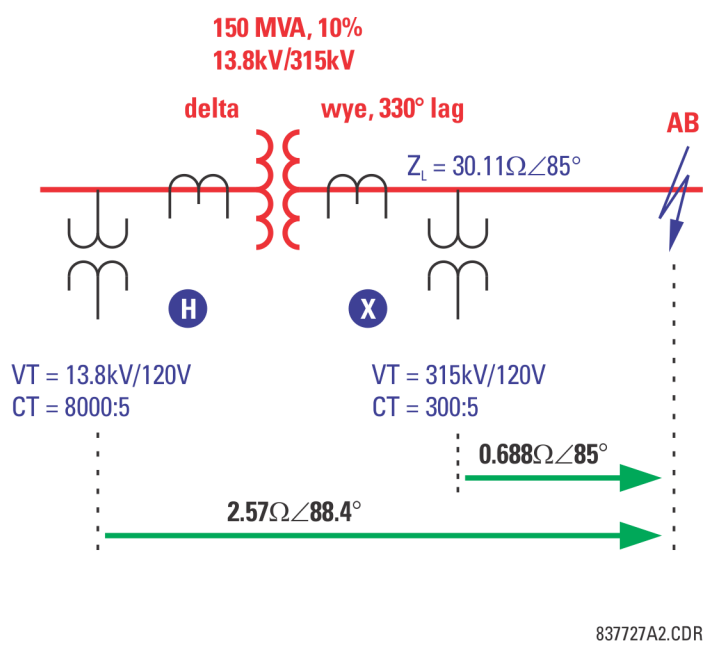

Normally, in order to respond to the fault shown in the figure, a distance relay is applied at the relaying point X. The table outlines the relay input signals at this location.

Table 10-10: Relay input signals at location X

Input	Primary	Secondary
VA	100.4 kV ∠–7.32°	38.25 V ∠–7.32°

Input	Primary	Secondary
VB	97.23 kV ∠–53.4°	37.04 V ∠–53.4°
VC	181.8 kV ∠–150.0°	69.26 V ∠–150.0°
IA	1.288 kA ∠–27.6°	21.47 A ∠–27.6°
IB	1.288 kA ∠152.4°	21.47 A ∠152.4°
IC	0	0

If installed at the location X, the relay uses the following input signals for its phase AB distance element:

$V = V_{AB}$ = 77.402 kV ∠57.5° primary or 29.49 V ∠57.5° secondary

$I = I_A - I_B$ = 2.576 kA ∠–27.6° primary or 42.93 A ∠–27.6° secondary

And consequently it sees an apparent impedance of

$Z_{app} = V / I$ = 30.05 Ω ∠85° primary or 0.687 Ω ∠85° secondary

If applied at location H, the relay sees the following input signals:

Table 10-11: Relay input signals at location H

Input	Primary	Secondary
VA	7.584 kV ∠–5.59°	69.95 V ∠–5.59°
VB	6.269 kV ∠–120.1°	54.52 V ∠–120.1°
VC	7.751 kV ∠125.5°	65.84 V ∠125.5°
IA	16.976 kA ∠–27.6°	10.61 A ∠–27.6°
IB	33.952 kA ∠152.4°	21.22 A ∠152.4°
IC	16.976 kA ∠–27.6°	10.61 A ∠–27.6°

The relay is set as follows:

XFMR VOL CONNECTION = "Dy11"

XFMR CUR CONNECTION = "Dy11"

Consequently, the following signals are applied to the phase AB distance element:

$$V = \frac{1}{\sqrt{3}} V_{AB} - V_{BC} = 10.861\ \text{kV}\angle 59.9^\circ \text{ primary or } 94.45\ \text{V}\angle 59.9^\circ \text{ secondary} \quad \textbf{Eq. 10-40}$$

$$I = -\sqrt{3} I_B = 58.860\ \text{kA}\angle -27.6^\circ \text{ primary or } 36.75\ \text{A}\angle -27.6^\circ \text{ secondary} \quad \textbf{Eq. 10-41}$$

This results in the following apparent impedance:

$$Z_{app} = \frac{V}{I} = \frac{94.45\ \text{kV}\angle 59.9^\circ}{36.75\ \text{kA}\angle -27.6^\circ} = 2.570\ \Omega\angle 87.5^\circ \text{ secondary} \quad \textbf{Eq. 10-42}$$

This value is a correct measure of the distance from the VT location to the fault. For relay location 2, this certainly includes the positive-sequence impedance of the transformer:

$$Z_T(\text{at } 13.8\ \text{kV}) = \frac{10}{100} \times \frac{(13.8\ \text{kV})^2}{150\ \text{MVA}} = 0.127\Omega\angle 90^\circ$$
$$Z_L(\text{at } 13.8\ \text{kV}) = 30.11 \times \left(\frac{13.8}{315}\right)^2 = 0.05779\Omega\angle 85^\circ \quad \textbf{Eq. 10-43}$$

Thus, 0.127 Ω ∠90° + 0.05779 Ω ∠85° = 0.1847 Ω ∠88.4° primary side or 2.569 Ω ∠88.4° on the secondary side.

This example illustrates how the relay maintains correct reach for fault behind power transformers. When installed at X, the relay needs to be set to 0.687 Ω ∠85° secondary in order to reach to the fault shown in the figure. When installed at H, the relay needs to be set to 2.569 Ω ∠88.4° to ensure exactly same coverage.

See the Application of Settings chapter for information on setting calculations.

10.5 Single-pole tripping

10.5.1 Overview

10.5.1.1 Introduction

Single pole operations make use of many features of the relay. At minimum, the trip output, recloser, breaker control, open pole detector, and phase selector must be fully programmed and in service; and either protection elements or digital inputs representing fault detection must be available for successful operation. When single pole trip-and-reclose is required overall control within the relay is performed by the trip output element. This element includes interfaces with pilot-aided schemes, the line pickup, breaker control, and breaker failure elements.

Single pole operations are based on use of the phase selector to identify the type of the fault, to eliminate incorrect fault identification that can be made by distance elements in some circumstances and to provide trip initiation from elements that are not capable of any fault type identification, such as high-set negative-sequence directional overcurrent element. The scheme is also designed to make use of the advantages provided by communications channels with multiple-bit capacities for fault identification.

Figure 10-16: Single-pole operation

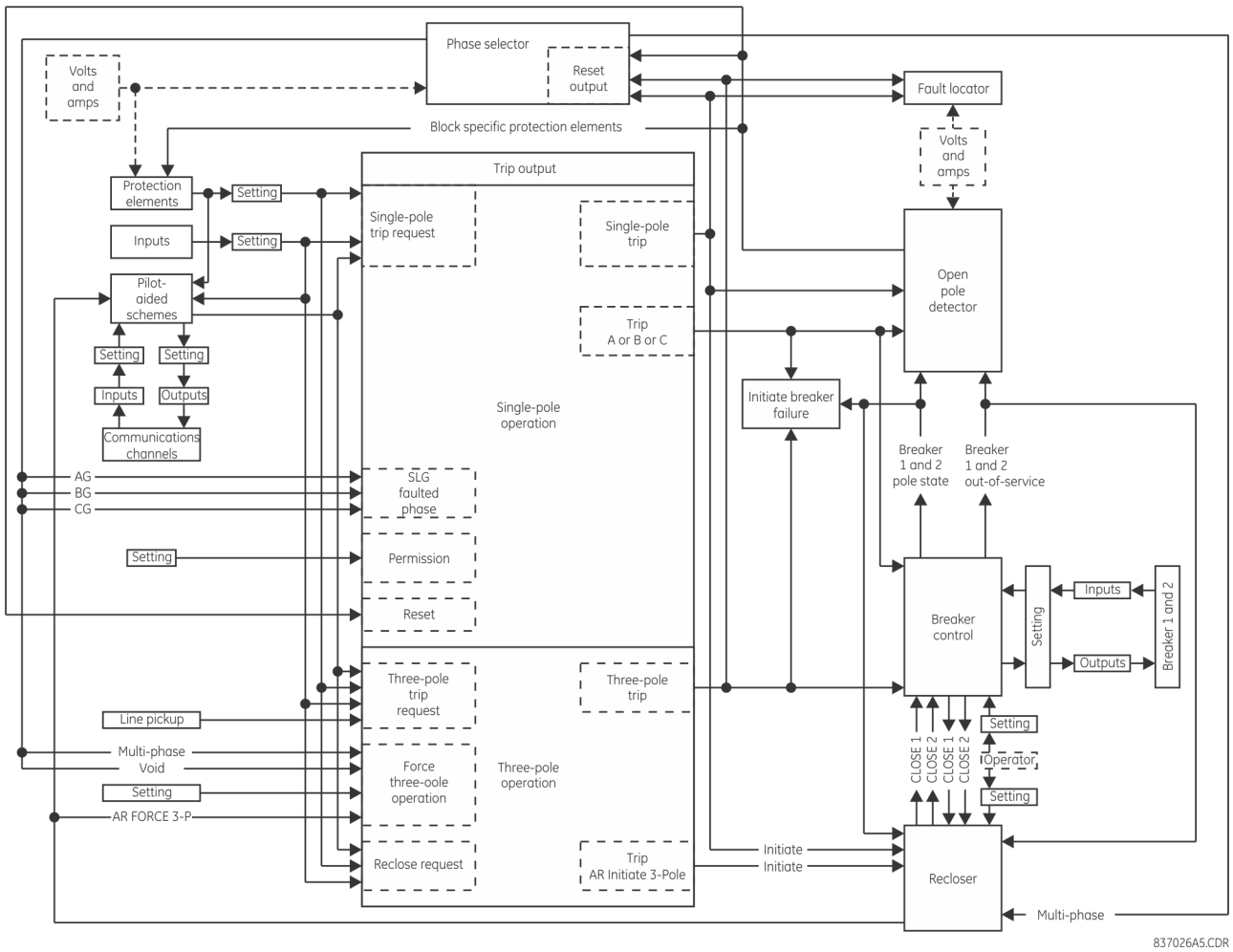

The trip output element receives requests for single and three-pole trips and three-pole reclose initiation, which it then processes to generate outputs that are used to

- Determine whether a single or three-pole operation is to be performed
- Initiate tripping of breaker poles A, B, and C, either individually or as a group
- Initiate breaker failure protection for phases A, B, and C, either individually or as a group
- Notify the open pole detector when a single pole operation is imminent
- Initiate either single or three-pole reclosing
- Notify the phase selector when a trip operation is imminent

When notified that a single pole operation has been initiated, the open-pole detector

- Initiates blocking of protection elements that can potentially maloperate when a breaker pole is open
- Instructs the phase selector to de-assert all outputs, as an open pole invalidates calculations

The operation of the scheme on a line in a single breaker arrangement is described as follows. The line is protected by a L90 relay using the line pickup and zone 1 phase and ground distance elements, and a permissive overreaching transfer trip scheme (using zone 2 phase and ground distance elements as well as negative-sequence directional overcurrent elements, **GND DIR O/C FWD**: "NEG SEQ OC1 FWD," **GND DIR O/C REV**: "NEG SEQ OC1 REV"). Zone 1 is configured to issue a single-pole trip when appropriate (**TRIP 1-POLE INPUT-1**: "GND DIST Z1 OP," **TRIP 1-POLE INPUT-2**: "PHS DIST Z1 OP"). By default, the POTT scheme issues a single-pole trip. It is assumed that when tripping three poles, both the zone 1 and the POTT initiate three-pole reclosing. This is achieved by setting **TRIP RECLOSE INPUT-1**: "POTT TRIP 3P," **TRIP RECLOSE INPUT-2**: "GND DIST Z1 OP," and **TRIP RECLOSE INPUT-3**: "PHS DIST Z1 OP."

It is assumed for this discussion that the relay features that are shown in the Single-Pole Operation figure have been programmed for the application and are in service. The description begins with line breakers open at both the local and remote ends, and the operation of the scheme is described in chronological order.

Because the line is de-energized, the line pickup element is armed. The recloser is presently enabled. An operator requests that breaker control close the breaker, and it operates output relays to close breaker poles A, B, and C. This operator manual-close request is also forwarded from breaker control to recloser, which becomes disabled, de-asserting its "Enabled" output. This output is transferred to trip output, where it converts any input request for a single pole operation into a three-pole operation. At the recloser, the **AR1 BLK TIME @ MAN CLOSE** timer is started.

The breaker closes and status monitoring contacts on the breaker poles change state; the new breaker pole states are reported to breaker control, which in turn transfers these states to the recloser, trip output, breaker failure, and open pole detector. Because a fault is not detected the **AR1 BLK TIME @ MAN CLOSE** times out and the recloser is enabled, which asserts the "Enabled" output, informing the trip output element that single-pole trip operations are now permitted. When normal voltage appears on the line, the line pickup element is disarmed. As the local line breaker has not tripped, the operator closes the breaker at the remote end of the line, placing the line in service.

Several scenarios are considered as follows.

10.5.1.2 SLG fault

An AG fault occurs close to the considered relay. Immediately after the fault, the disturbance detector (50DD) picks-up and activates the phase selector. The phase selector recognizes an AG fault by asserting its PHASE SELECT AG operand. Ground distance zone 1 (AG element) responds to the fault.

At this moment, the request to trip is placed for the trip output. As the fault is recognized as an AG fault, the TRIP PHASE A operand is asserted by the trip output. This signal is passed to the breaker control scheme and results in tripping pole A of the breaker.

Simultaneously with the TRIP PHASE A operand, the TRIP 1-POLE operand is asserted to activate the open pole detector. This detector responds to the TRIP PHASE A signal by declaring phase A open by asserting OPEN POLE OP FA (even before it is actually opened). The TRIP PHASE A signal resets only after the breaker actually operates as indicated by its auxiliary contact. At this moment the open pole detector responds to the breaker position and continues to indicate phase A opened. This indication results in establishing blocking signals for distance elements (OPEN POLE BLK AB, OPEN POLE BLK CA operands are asserted). If neutral and negative-sequence overcurrent elements are mapped into the trip output to trigger single-pole tripping, they must be blocked with the OPEN POLE BLK N operand, specifically provided for this purpose. The OPEN POLE BLK N operand must be assigned through the block setting of the overcurrent element. The two latter operands

block phase distance AB and CA elements, respectively (all zones); the OPEN POLE FA OP blocks the ground distance AG elements (all zones). As a result, the Z1 OP and Z2 PKP operands that were picked-up reset immediately. The following distance elements remain operational guarding the line against evolving faults: BG, CG, and BC.

As zone 2 and/or negative-sequence directional elements pick up due to the fault, the permission to trip is keyed to the remote end. Assume here that a single-bit channel is used. If so, no extra information is sent to the remote end, just permission to trip sent over the TX1 operand. Upon receiving permission to trip over RX1, the POTT scheme decides to trip. The scheme checks the phase selector for phase type identification and issues a trip for phase A by asserting the POTT TRIP A operand. This operand is passed to the trip output and results in the same action as described previously for zone 1.

Depending on response times, the actual trip is initiated either by zone 1 or by the POTT scheme. At the moment that the TRIP 1-POLE operand is asserted, the phase selector resets and no other trip action can take place. After the trip command is issued, all the picked up elements are forced to reset by the open pole detector.

The TRIP 1-POLE operand initiates automatically a single-pole autoreclose. The autoreclose is started and asserts the AR RIP operand. This operand keeps blocking the phase selector so that it does not respond to any subsequent events. At the same time, the operand removes zero-sequence directional supervision from ground distance zones 2 and 3 so that they can respond to a single-line-to-ground fault during open pole conditions.

The AR FORCE 3-P TRIP operand is asserted 1.25 cycles following autoreclose initiation. This operand acts as an enabler for any existing trip request. In this case, none of the protection elements is picked up at this time, therefore no more trips are initiated.

When the recloser dead time interval is complete, it signals the breaker control element to close the breaker. The breaker control element operates output relays to close the breaker.

When pole A of the breaker closes, this new status is reported to the breaker control element, which transfers this data to the breaker failure, autorecloser, open pole detector and trip output elements. The response at breaker failure depends on the programming of that element. The response at the autorecloser is not relevant to this discussion. At the open pole detector, the blocking signals to protection elements are de-asserted.

If the fault was transient, then the reset time expires at the autorecloser and the AR FORCE 3-P TRIP and RIP outputs are de-asserted, returning all features to the state described at the beginning of this description.

If the fault was permanent, appropriate protection elements detect this and place a trip request for the trip output element. As the AR FORCE 3-P TRIP is still asserted, the request is executed as a three-pole trip.

The response of the system from this point is as described earlier for the second trip, except that the autorecloser locks out upon the next initiation (depending on the number of shots programmed).

10.5.1.3 SLG fault evolving into LLG

When an AG fault occurs, the events unfold initially as in the previous example. If the fault evolves quickly, the phase selector changes its initial assessment from AG to ABG fault and when the trip request is placed either by the zone 1 or the POTT scheme, a three-pole trip is initiated. When this is the case, all three TRIP PHASE A, B, and C operands are asserted. The command is passed to the breaker control element and results in a three-pole trip. At the same time, the recloser is initiated as per settings of the trip output. As the TRIP 3-POLE operand is asserted (not the TRIP 1-POLE operand), the open pole is not activated. Because the AR RIP in progress is asserted, the phase selector is blocked as well.

If the fault evolves slowly, the sequence is different. The relay trips phase A as in the previous example. The phase selector resets, the open pole detector is activated and forces the zone 1 and zone 2 AG, AB, CA and negative-sequence overcurrent elements to reset. If the zone 1 BG element picks up, or the zone 2 BG element picks up resulting in operation of the POTT scheme, no trip command is issued until the AR FORCE 3-P TRIP is asserted. This happens 1.25 cycles after the first trip. If at this time or any time later a request for trip is placed (due to an evolving fault), a three-pole trip is initiated. The TRIP 1-POLE operand is de-asserted by the TRIP 3-POLE operand, resetting the open pole detector. Shortly all three-poles are opened.

When the dead time expires, the recloser signals the breaker control to close the breaker. At this time, all the protection elements are operational, as the open pole detector is not blocking any elements. If the line-side VTs are used, the line pickup element is armed as well. If there is a fault on the line, these elements pick up the fault and issue the next request for trip. This request results in a three-pole trip as the AR FORCE 3-P TRIP is still asserted.

The response of the system from this point is as described earlier for the second trip, except that the recloser goes to lockout upon the next initiation (depending on the number of shots programmed).

10.5.2 Phase selection

The L90 uses phase relations between current symmetrical components for phase selection. First, the algorithm validates if there is enough zero-sequence, positive-sequence, and negative-sequence currents for reliable analysis. The comparison is adaptive; that is, the magnitudes of the three symmetrical components used mutually as restraints confirm if a given component is large enough to be used for phase selection. Once the current magnitudes are validated, the algorithm analyzes phase relations between the negative-sequence and positive-sequence currents and negative-sequence and zero-sequence currents (when applicable), as shown in the figure.

Figure 10-17: Phase selection principle (ABC phase rotation)

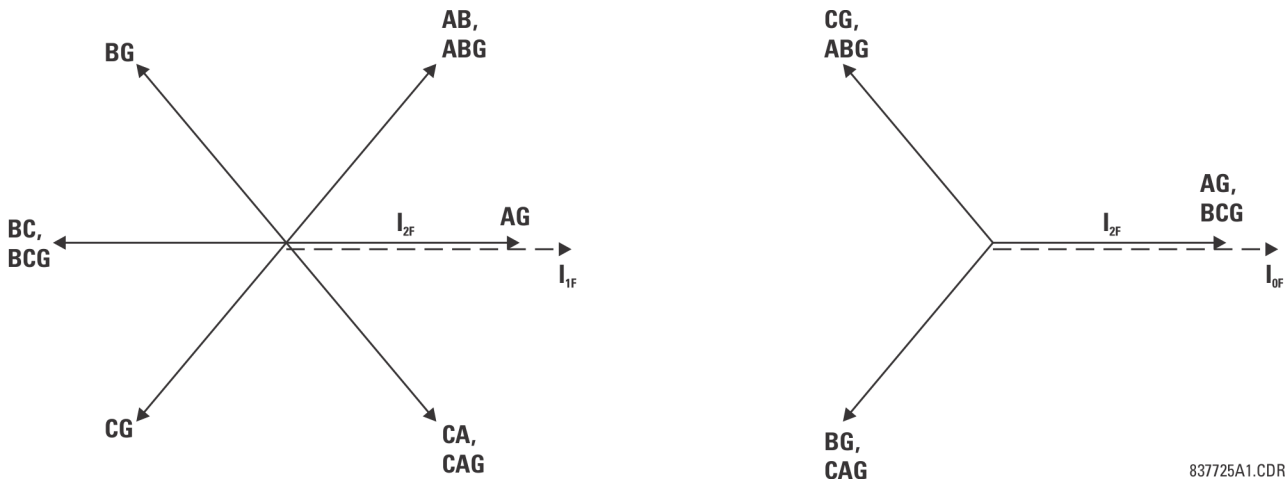

Due to dual comparisons, the algorithm is very secure. For increased accuracy and to facilitate operation in weak systems, the pre-fault components are removed from the analyzed currents. The algorithm is very fast and ensures proper phase selection before any of the correctly set protection elements operates.

Under unusual circumstances, such as weak-infeed conditions with the zero-sequence current dominating during any ground fault, or during cross-country faults, the current-based phase selector may not recognize any of the known fault pattern. If this is the case, voltages are used for phase selection. The voltage algorithm is the same as the current-based algorithm. For example, phase angles between the zero-sequence, negative-sequence, and positive-sequence voltages are used. The pre-fault values are subtracted prior to any calculations.

The pre-fault quantities are captured and the calculations start when the disturbance detector (50DD) operates. When an open pole is declared, the phase selector resets all its outputs operands and ignores any subsequent operations of the disturbance detector.

The phase selector runs continuously. When there is no disturbance in the power system, and the disturbance detector (50DD) from the source assigned as the **DISTANCE SOURCE** is reset, then the PHASE SELECT VOID FlexLogic operand is set and all other phase selector operands are reset. All current and voltage sequence components are memorized and continuously updated.

When the disturbance detector (50DD) operates, memory stops being updated and retains two cycles of old current and voltage values. First, purely fault components of current and voltage are calculated by removing the pre-fault (memory) quantities from presently calculated values. A series of conditions are checked with respect to magnitudes and phase angles of current and voltage symmetrical components in order to detect the fault type. Secondly, currents are used to identify the fault type (AG, BG, CG, AB, BC, CA, ABG, BCG, or CAG) according to the Phase Selection Principle figure. If the currents fail to identify the fault type, and voltages are available, then voltages are used. If any of the above types is determined, then the corresponding FlexLogic operand outlined in the following table is asserted.

Table 10-12: FlexLogic operands asserted

Operand	Description
PHASE SELECT AG	Asserted when a phase A to ground fault is detected
PHASE SELECT BG	Asserted when a phase B to ground fault is detected

Operand	Description
PHASE SELECT CG	Asserted when a phase C to ground fault is detected
PHASE SELECT AB	Asserted when a phase A to B fault is detected
PHASE SELECT BC	Asserted when a phase B to C fault is detected
PHASE SELECT CA	Asserted when a phase C to A fault is detected
PHASE SELECT ABG	Asserted when a phase A to B to ground fault is detected
PHASE SELECT BCG	Asserted when a phase B to C to ground fault is detected
PHASE SELECT CAG	Asserted when a phase C to A to ground fault is detected

If none of the fault types outlined in the table is determined, then three-phase fault conditions are checked to detect the presence of positive-sequence current and the absence of both zero-sequence and negative-sequence current. If these conditions are met, then the PHASE SELECT 3P FlexLogic operand is asserted; otherwise, the PHASE SELECT VOID operand is asserted, indicating that the phase selector failed to identify the fault type.

Finally, the states of the following additional FlexLogic operands are determined.

Table 10-13: FlexLogic operands asserted

Operand	Description
PHASE SELECT SLG	Asserted if any of PHASE SELECT AG, PHASE SELECT BG, or PHASE SELECT CG operands is active
PHASE SELECT MULTI-P	Asserted if neither the PHASE SELECT SLG nor PHASE SELECT VOID operands are being asserted

The phase selector operands are reset a half cycle after the OPEN POLE OP FlexLogic operand is asserted or after delay defined by the **PHASE SELECTOR RESET** setting (in the Trip Output element) once the disturbance detector (50DD) initially operated.

Figure 10-18: Phase selector logic

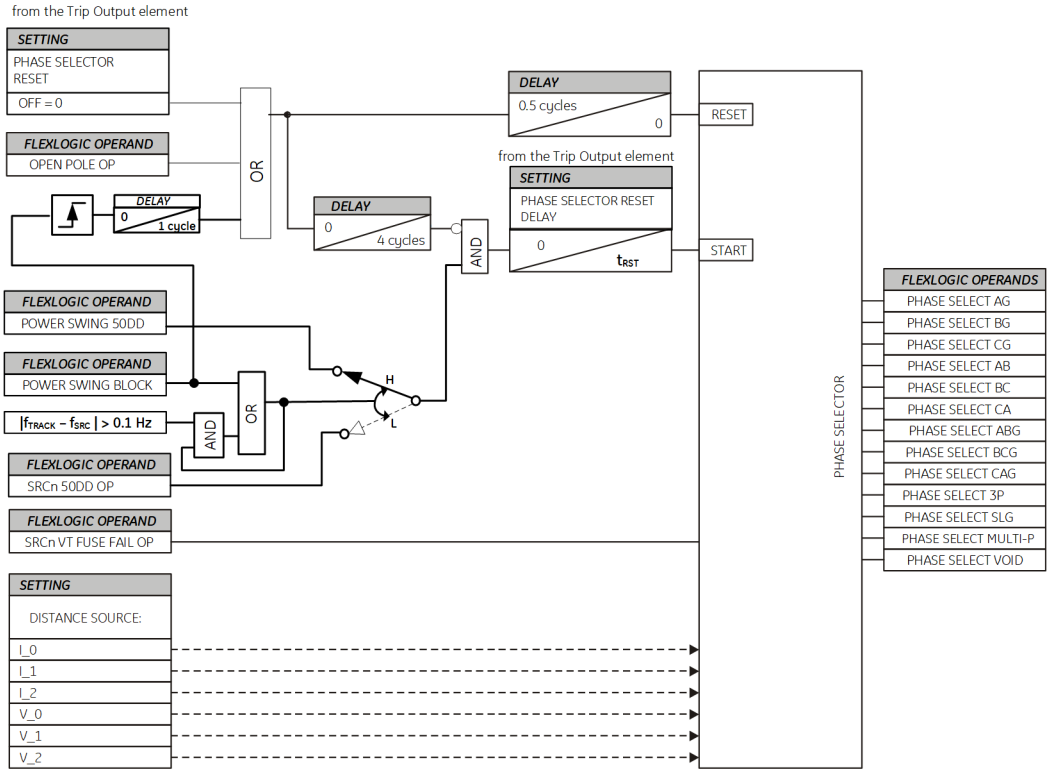

Note: f_{SRC}, and Power Swing element use the same source for distance.

10.5.3 Communications channels for pilot-aided schemes

10.5.3.1 Description

In the L90 relay, pilot-aided schemes transmit a code representing the type of fault determined by the local phase selector according to the scheme logic. At a receiving terminal, the local and remote data are combined to determine the action to be performed. Schemes can be used with channels that can carry one, two or four bits. Using a one-bit channel, the schemes at all terminals of the line use their local phase selectors to identify the fault type and initiate appropriate tripping actions. In single-pole applications however, a three-pole trip can be performed in the event of an in-line single-phase fault co-incident with a fault on a different phase (cross-country fault) that is within the reach of the local phase selector, which is considerably longer than the line. This possibility can be reduced by using a two-bit channel, and eliminated by using a four-bit channel.

Using two-bit channels, the relays can share limited information about their local phase selection, improving considerably the accuracy of single-pole tripping on cross-country faults. Two-bit channels, however, can only provide four different messages, one of which must be "no fault has been detected." With only three messages available, it is not possible to transmit sufficient information to eliminate the use of local phase selector data, so a three-pole operation can occur in a cross-country fault condition. Using four-bit channels, the relays share enough information about fault types seen from all the line terminals that local fault selector data can be rejected. In addition, in multiple bit systems the relays do not respond to non-valid bit combinations, making the protection system more immune to communication problems than in a single bit system.

Each scheme within the relay has a setting that specifies the number of bits available on the associated communications channel. This setting defines the input (RX1, RX2, RX3, RX4) and output (TX1, TX2, TX3, TX4 for communications and [Scheme Abbreviation] TRIP A, TRIP B, TRIP C, TRIP 3P for action) operands used by the scheme, the data codes used to convey fault data between terminals, and the method of combining information from the local and remote terminals to produce an output.

10.5.3.2 Single-bit channels

The TX1 and RX1 operands are used, and fault data is coded per the following tables.

Table 10-14: Permissive scheme transmit codes for one-bit channels

Phase selector determination of fault type	Bit pattern transmitted
	TX1
AG, BC, BCG, BG, CA, CAG, CG, AB, ABG, 3P	1
Unrecognized or AR FORCE 3P TRIP	1
None of the above	0

Table 10-15: Blocking scheme transmit codes for one-bit channels

Phase selector determination of fault type	Bit pattern transmitted
	TX1
AG, BC, BCG, BG, CA, CAG, CG, AB, ABG, 3P	0
Unrecognized or AR FORCE 3P TRIP	0
None of the above	1

Table 10-16: Unblocking scheme transmit codes for one-bit channels

Phase selector determination of fault type	Bit pattern transmitted
	TX1
AG, BC, BCG, BG, CA, CAG, CG, AB, ABG, 3P	1
Unrecognized or AR FORCE 3P TRIP	1
None of the above	0

The action output is generated per the following tables.

Table 10-17: Permissive scheme trip table for one-bit channels

Remote data		Local data	
Bit pattern received RX1	Remote determination of fault type	Local determination of fault type	Trip output
1	Any	AG Fault	Trip Phase A (A+N/G)
1	Any	BG Fault	Trip Phase B (B+N/G)
1	Any	CG Fault	Trip Phase C (C+N/G)
1	Any	AB, ABG, BC, BCG, CA, CAG, 3P, Unrecognized	Trip Three Phases (per local selection, unrecognized and 3P=A+B+C+N/G)

Table 10-18: Blocking scheme trip table for one-bit channels

Remote data		Local data	
Bit pattern received RX1	Remote determination of fault type	Local determination of fault type	Trip output
0	Any	AG Fault	Trip Phase A
0	Any	BG Fault	Trip Phase B
0	Any	CG Fault	Trip Phase C
0	Any	AB, ABG, BC, BCG, CA, CAG, 3P, Unrecognized	Trip Three Phases

Table 10-19: Unblocking scheme trip table for one-bit channels

Remote data			Local data	
Bit pattern received		Remote determination of fault type	Local determination of fault type	Trip output
RX1	LOG1			
0 or 1	1	Any	AG Fault	DCUB Trip A
0 or 1	1	Any	BG Fault	DCUB Trip B
0 or 1	1	Any	CG Fault	DCUB Trip C
0 or 1	1	Any	AB, ABG, BC, BCG, CA, CAG, 3P, Unrecognized	DCUB Trip 3P

The scheme initiates a three-phase trip if the phase selector fails to recognize the fault type or after the AR FORCE 3P TRIP operand is asserted.

10.5.3.3 Two-bit channels

The TX1, TX2, RX1, and RX2 operands are used and fault data is coded per the following tables.

Table 10-20: Permissive scheme transmit codes for two-bit channels

Phase selector determination of fault type	Bit pattern transmitted	
	TX1	TX2
AG, BC, BCG	1	0
BG, CA, CAG	0	1
CG, AB, ABG, 3P, Unrecognized	1	1

Table 10-21: Blocking scheme transmit codes for two-bit channels

Phase selector determination of fault type	Bit pattern transmitted		FlexLogic operands asserted	
	TX1	TX2	TX1 STOP	TX2 STOP
AG, BC, BCG	0	1	1	0
BG, CA, CAG	1	0	0	1
CG, AB, ABG, 3P	0	0	1	1
CG, AB, ABG, 3P, Unrecognized	0	0	1	1

Table 10-22: Unblocking scheme transmit codes for two-bit channels

Phase selector determination of fault type	Bit pattern transmitted	
	TX1	TX2
AG, BC, BCG	1	0
BG, CA, CAG	0	1
CG, AB, ABG, 3P, Unrecognized	1	1

The action output is generated per the following tables.

Table 10-23: Permissive scheme trip table for two-bit channels

Remote data			Local data	
Bit pattern received		Remote determination of fault type	Local determination of fault type	Trip output
RX1	RX2			
1	0	AG, BC, BCG	AG, AB, ABG CA, CAG, 3P	Trip Phase A
0	1	BG, CA, CAG	AG	
1	1	CG, AB, ABG, 3P, Unrecognized	AG	
0	1	BG, CA, CAG	BG, AB, ABG, BC, BCG, 3P	Trip Phase B
1	1	CG, AB, ABG, 3P, Unrecognized	BG	
1	0	AG, BC, BCG	BG	
1	1	CG, AB, ABG, 3P, Unrecognized	CG, BC, BCG, CA, CAG	Trip Phase C
1	0	AG, BC, BCG	CG	
0	1	BG, CA, CAG	CG	
1	1	CG, AB, ABG, 3P, Unrecognized	AB, ABG, 3P, Unrecognized	Trip Three Phases
1	0	AG, BC, BCG	BC, BCG, Unrecognized	
0	1	BG, CA, CAG	CA, CAG, Unrecognized	

Table 10-24: Blocking scheme trip table for two-bit channels

Remote data			Local data	
Bit pattern received		Remote determination of fault type	Local determination of fault type	Trip output
RX1	RX2			
0	1	AG, BC, BCG	AG, AB, ABG CA, CAG, 3P	DIR BLOCK TRIP A
1	0	BG, CA, CAG	AG	
0	0	CG, AB, ABG, 3P, Unrecognized	AG	
1	0	BG, CA, CAG	BG, AB, ABG, BC, BCG, 3P	DIR BLOCK TRIP B
0	0	CG, AB, ABG, 3P, Unrecognized	BG	
0	1	AG, BC, BCG	BG	
0	0	CG, AB, ABG, 3P, Unrecognized	CG, BC, BCG, CA, CAG	DIR BLOCK TRIP C
0	1	AG, BC, BCG	CG	
1	0	BG, CA, CAG	CG	

Remote data			Local data	
Bit pattern received		Remote determination of fault type	Local determination of fault type	Trip output
RX1	RX2			
0	0	CG, AB, ABG, 3P, Unrecognized	AB, ABG, 3P, Unrecognized	DIR BLOCK TRIP 3P
0	1	AG, BC, BCG	BC, BCG Unrecognized	
1	0	BG, CA, CAG	CA, CAG Unrecognized	

Table 10-25: Unblocking scheme trip table for two-bit channels

Remote data					Local data	
Bit pattern received				Remote determination of fault type	Local determination of fault type	Trip output
RX1	LOG1	RX2	LOG2			
1	1	0	0	AG, BC, BCG	AG, AB, ABG CA, CAG, 3P	DCUB TRIP A
0	1	0	0			
0	0	1	1	BG, CA, CAG	AG	
0	0	0	1			
1	1	1	1	CG, AB, ABG, 3P, unrecognized	AG	
0	1	1	1			
1	1	0	1			
0	1	0	1			
0	0	1	1	BG, CA, CAG	BG, AB, ABG BC, BCG, 3P	DCUB TRIP B
0	0	0	1			
1	1	1	1	CG, AB, ABG, 3P, unrecognized	BG	
0	1	1	1			
1	1	0	1			
0	1	0	1			
1	1	0	0	AG, BC, BCG	BG	
0	1	0	0			
1	1	0	0	AG, BC, BCG	CG	DCUB TRIP C
0	1	0	0			
0	0	1	1	BG, CA, CAG	CG	
0	0	0	1			
1	1	1	1	CG, AB, ABG, 3P, unrecognized	CG, BC, BCG, CA, CAG	
0	1	1	1			
1	1	0	1			
0	1	0	1			
1	1	0	0	AG, BC, BCG	BC, BCG, unrecognized	DCUB TRIP 3P
0	1	0	0			
0	0	1	1	BG, CA, CAG	CA, CAG, unrecognized	
0	0	0	1			
1	1	1	1	CG, AB, ABG, 3P, unrecognized	AB, ABG, 3P, unrecognized	
0	1	1	1			
1	1	0	1			
0	1	0	1			

10.5.3.4 Four-bit channels

The TX1, TX2, TX3, TX4, RX1, RX2, RX3, and RX4 operands are used.

Table 10-26: Permissive scheme transmit codes for four-bit channels

Phase selector determination of fault type	Bit pattern transmitted			
	TX1	TX2	TX3	TX4
AG	1	0	0	0
BG	0	1	0	0
CG	0	0	1	0
AB, ABG, BC, BCG, CA, CAG, 3P, Unrecognized	0	0	0	1

Table 10-27: Blocking scheme transmit codes for four-bit channels

Phase selector determination of fault type	Bit pattern transmitted				FlexLogic operands asserted			
	TX1	TX2	TX3	TX4	TX1 STOP	TX2 STOP	TX3 STOP	TX4 STOP
AG	0	1	1	1	1	0	0	0
BG	1	0	1	1	0	1	0	0
CG	1	1	0	1	0	0	1	0
AB, ABG, BC, BCG, CA, CAG, 3P, Unrecognized	1	1	1	0	0	0	0	1

Table 10-28: Unblocking scheme transmit codes for four-bit channels

Phase selector determination of fault type	Bit pattern transmitted			
	TX1	TX2	TX3	TX4
AG	1	0	0	0
BG	0	1	0	0
CG	0	0	1	0
AB, ABG, BC, BCG, CA, CAG, 3P, Unrecognized	0	0	0	1

The action output is generated per the following tables.

Table 10-29: Permissive scheme trip table for four-bit channels

Remote data					Local data	
Bit pattern received				Remote determination of fault type	Local determination of fault type	Trip output
RX1	RX2	RX3	RX4			
0	0	0	1	MULTI-P	AG	Trip Phase A
0	1	0	0	BG	AG	
0	0	1	0	CG	AG	
1	0	0	0	AG	AG, AB, ABG, CA, CAG, 3P, Unrecognized	
0	1	0	0	BG	BG, AB, ABG, BC, BCG, 3P, Unrecognized	Trip Phase B
1	0	0	0	AG	BG	
0	0	1	0	CG	BG	
0	0	0	1	MULTI-P	BG	
0	0	1	0	CG	CG, BC, BCG, CA, CAG, 3P, Unrecognized	Trip Phase C
1	0	0	0	AG	CG	
0	1	0	0	BG	CG	
0	0	0	1	MULTI-P	CG	

Remote data					Local data	
Bit pattern received				Remote determination of fault type	Local determination of fault type	Trip output
RX1	RX2	RX3	RX4			
1	0	0	0	AG	BC, BCG	Trip Three Phases
0	1	0	0	BG	CA, CAG	
0	0	1	0	CG	AB, ABG	
0	0	0	1	MULTI-P	Unrecognized	

Table 10-30: Blocking scheme trip table for four-bit channels

Remote data					Local data	
Bit pattern received				Remote determination of fault type	Local determination of fault type	Trip output
RX1	RX2	RX3	RX4			
0	0	0	0	Any while the INIT signal was not established		Trip as for single-bit channel
1	1	1	0	MULTI-P	AG	DIR BLOCK TRIP A
1	0	1	1	BG	AG	
1	1	0	1	CG	AG	
0	1	1	1	AG	AG, AB, ABG, CA, CAG, 3P, Unrecognized	
1	0	1	1	BG	BG, AB, ABG, BC, BCG, 3P, Unrecognized	DIR BLOCK TRIP B
0	1	1	1	AG	BG	
1	1	0	1	CG	BG	
1	1	1	0	MULTI-P	BG	
1	1	0	1	CG	CG, BC, BCG, CA, CAG, 3P, Unrecognized	DIR BLOCK TRIP C
0	1	1	1	AG	CG	
1	0	1	1	BG	CG	
1	1	1	0	MULTI-P	CG	
0	1	1	1	AG	BC, BCG	DIR BLOCK TRIP 3P
1	0	1	1	BG	CA, CAG	
1	1	0	1	CG	AB, ABG	
1	1	1	0	MULTI-P	Unrecognized	

Table 10-31: Unblocking scheme trip table for four-bit channels

Remote data									Local data	
Bit pattern received								Remote determination of fault type	Local determination of fault type	Trip output
RX1	LOG1	RX2	LOG2	RX3	LOG3	RX4	LOG4			
0	0	0	0	0	0	1	1	MULTI-P	AG	DCUB TRIP A
0	0	0	0	0	0	0	1			
0	0	1	1	0	0	0	0	BG		
0	0	0	1	0	0	0	0			
0	0	0	0	1	1	0	0	CG		
0	0	0	0	0	1	0	0			
1	1	0	0	0	0	0	0	AG	AG, AB, ABG, CA, CAG, 3P, unrecognized	
0	1	0	0	0	0	0	0			

10

Remote data									Local data	
Bit pattern received								Remote determination of fault type	Local determination of fault type	Trip output
RX1	LOG1	RX2	LOG2	RX3	LOG3	RX4	LOG4			
0	0	1	1	0	0	0	0	BG	AG, AB, ABG, CA, CAG, 3P, unrecognized	DCUB TRIP B
0	0	0	1	0	0	0	0			
1	1	0	0	0	0	0	0	AG	BG	
0	1	0	0	0	0	0	0			
0	0	0	0	1	1	0	0	CG		
0	0	0	0	0	1	0	0			
0	0	0	0	0	0	1	1	MULTI-P		
0	0	0	0	0	0	0	1			
0	0	0	0	1	1	0	0	CG	CG, BC, BCG, CA, CAG, 3P, unrecognized	DCUB TRIP C
0	0	0	0	0	1	0	0			
1	1	0	0	0	0	0	0	AG	CG	
0	1	0	0	0	0	0	0			
0	0	1	1	0	0	0	0	BG		
0	0	0	1	0	0	0	0			
0	0	0	0	0	0	1	1	MULTI-P		
0	0	0	0	0	0	0	1			
1	1	0	0	0	0	0	0	AG	BC, BCG	DCUB TRIP 3P
0	1	0	0	0	0	0	0			
0	0	1	1	0	0	0	0	BG	CA, CAG	
0	0	0	1	0	0	0	0			
0	0	0	0	1	1	0	0	CG	AB, ABG	
0	0	0	0	0	1	0	0			
0	0	0	0	0	0	1	1	MULTI-P	3P or unrecognized	
0	0	0	0	0	0	0	1			

10.5.4 Permissive echo signaling

The "echo" feature can reduce the response time of an over-reaching scheme when a terminal is disconnected from the line. In this condition, a zone 2 element at the terminal that remains in-service can detect a fault, but cannot trip, as a permissive signal is not received from the remote terminal. This feature is provided in the permissive over-reaching transfer trip and hybrid permissive over-reaching transfer trip schemes.

10.5.4.1 Permissive over-reaching transfer trip scheme

When used, this feature "echoes" a reliable received permissive signal back to the originating terminal when a line-end-open condition is identified by the line pickup logic. The permissive echo is programmed as a one-shot logic. The echo is sent only once and then the echo logic locks out for a settable period. The duration of the echo pulse does not depend on the duration or shape of the received Rx signals but is settable.

The echo is sent back only if none of the overreaching protection elements operates.

10.5.4.2 Hybrid permissive over-reaching transfer trip permissive echo

When used, this feature "echoes" a reliable received permissive signal back to the originating terminal if the line-end-open condition is recognized by the line pickup scheme and the fault is not identified as a reverse fault by the zone 4 or the ground directional overcurrent function (if used). The permissive echo is programmed as a one-shot logic. The echo is sent only once and then the echo logic locks out for a settable period. The duration of the echo pulse does not depend on the duration or shape of the received Rx signal but is settable as **ECHO DURATION**.

The echo is sent back only if none of the overreaching protection elements operates.

10.5.4.3 Permissive echo operands and transmit codes

In single-pole tripping, single-bit channel applications the signal received on bit number 1 (Rx1) is echoed back on bit number 1 (Tx1). In two- and four-bit applications, the following echo tables apply.

Table 10-32: Echo table for two-bit channels

Local determination of fault type	Echoed bits	
	TX1	TX2
AG	1	0
BG	0	1
CG	1	1
AB, ABG, BC, BCG, CA, CAG, 3P, Unrecognized	Send back as received	

Table 10-33: Echo table for four-bit channels

Local determination of fault type	Echoed bits			
	TX1	TX2	TX3	TX4
AG	1	0	0	0
BG	0	1	0	0
CG	0	0	1	0
AB, ABG, BC, BCG, CA, CAG, 3P, Unrecognized	Send back as received			

NOTE For the directional comparison unblocking scheme, the echo is performed in the same manner as the Hybrid POTT echo, but by applying additionally the following logic for both the Rx (received) and LOG (loss-of-guard) for each channel: $ECHO_N = LOG_N$ AND RX_N.

10.5.5 Pilot scheme / phase selector coordination

The pilot schemes use the Phase Selector for local fault type identification. The latter can fail to respond to certain fault scenarios. Examples are simultaneous forward and reverse fault, simultaneous SLG and LL fault involving different phases (for example AG and BC), or two simultaneous faults in the same direction but at very different locations. The Phase Selector is optimized to either indicate correctly the forward fault or to assert the Void flag. For example, a combination of AG and BC is not a valid fault type; it is two different simultaneous faults and as such cannot be described by any single fault pattern, therefore, the Phase Selector asserts the Void flag.

The VOID phase selection combined with a local trip request (such as high-set directional overcurrent) results in a three-pole trip as per the Trip Output logic.

The Pilot Schemes, however, try to recover more information from the distance elements. Each scheme uses a forward looking, either underreaching or overreaching, distance zone. A given Pilot Scheme analyzes this zone for fault type identification if the Phase Selector asserts its Void flag: the DUTT scheme uses Z1; all the other schemes use Z2. The schemes analyze all six fault loops of the zone to determine the fault type.

For example, simultaneous forward AG and reverse BG faults can result in the Void indication. The POTT scheme would analyze the Z2 response. As only the AG element is picked up, the local phase selection is determined as AG. This is a correct indication.

Depending on the number of bits used for communications, the accuracy of the overall response can be further improved as illustrated in the next section.

This enhanced operation of the pilot-aided schemes is the reason to use a short pilot scheme priority time when setting the Trip Output logic. The timer forces the scheme to wait for a decision from the pilot scheme for a short period of time before accepting any local trip request. The advantage, however, materializes only if more than one-bit communications channels are used, and is important only on parallel lines or when the application requires maximum accuracy of single-pole tripping. In other cases, it is not recommended to delay the local trip decision.

10.5.6 Cross-country fault example

Assume a single pole operation application where L90 relays are used to protect a two-terminal line, (terminals T1 and T2) using phase and ground distance zone 1, 2, and 3 elements in a permissive over-reaching transfer trip scheme. The performance of the system with one, two, and four-bit communications channels is outlined for a mid-line phase A-to-ground fault and a co-incident phase B-to-ground fault just behind terminal T2. Assume also that the reclosers are enabled and reset.

At T1 the following protection elements pick up:

- Ground Distance Zone 1, 2, and 3 for an AG fault
- Ground Distance Zone 2 and 3 for a BG fault
- Phase Distance Zone 2 and 3 for an AB fault

At T1, the phase selector determines the fault is type ABG. This response is independent from the distance elements; the Phase Selector sees two forward faults.

At T2, the following protection elements pick up:

- Ground Distance Zone 1, 2, and 3 for an AG fault

At T2 the phase selector determines the fault is type AG. The reverse BG fault is likely to be ignored.

If a one-bit channel is used, terminal T1 trips three poles but terminal T2 trips phase A only, which is undesirable. See the table.

Table 10-34: One-bit channel tripping

Terminal	Remote data		Local data	
	Bit pattern received	Remote determination of fault type	Local determination of fault type	Trip output
	RX1			
T1	1	Any	MULTI-P (ABG)	Trip Three Phases
T2	1	Any	AG	Trip Phase A

If a two-bit channel is used, both terminals trip phase A only, which is desired. See the following table.

Table 10-35: Two-bit channel tripping

Terminal	Remote data			Local data	
	Bit pattern received		Remote determination of fault type	Local determination of fault type	Trip output
	RX1	RX2			
T1	1	0	AG	ABG	Trip Phase A
T2	1	1	ABG	AG	Trip Phase A

If a four-bit channel is used, both terminals trip phase A only, which is desired. See the following table.

Table 10-36: Four-bit channel tripping

Terminal	Remote data					Local data	
	Bit pattern received				Remote determination Of fault type	Local determination of fault type	Trip output
	RX1	RX2	RX3	RX4			
T1	0	0	0	1	AG	ABG	Trip Phase A
T2	1	0	0	0	ABG	AG	Trip Phase A

10.6 Fault locator

10.6.1 Overview

The L90 uses the following two methods to determine fault type and fault location:

- A multi-ended fault location algorithm using synchronized currents and voltage measurements from all line terminals
- A single-ended method based on the measurement from local terminal relay only during channel failures

10.6.2 Multi-ended fault locator

10.6.2.1 Description

When the L90 ordered has in-zone functionality, it does not support the multi-ended fault locator. This is because the use of the in-zone transformer replaces part of the existing data with in-zone data, which restricts multi-ended fault location.

The multi-ended fault location method is based on synchronized voltage and current measurements at all ends of the transmission line. This method makes it possible to compute the fault location without any assumptions or approximations. A single composite voltage and single composite current signal represent voltage and current measurements at any line terminal. These composite voltage and current signals are non-zero regardless of the fault type. The composite voltage at the fault can be computed from each end of the line by subtracting the line drop to the fault from the voltage at that end.

The multi-ended algorithm executes separately on each terminal. All terminals compute the same fault location, since they use the same equations applied to the same set of data. The algorithm is executed for both two-terminal and three-terminal applications. The three-terminal algorithm executes at each terminal that has information from all three terminals. If there is a communications failure on one channel, it affects only one of the three terminals, since there are fault phasors from all three terminals to compute the fault location. The three-terminal algorithm has two parts: one part that determines which line segment is faulted, and another part that locates the fault on the faulted segment. Each terminal can report a slightly different fault resistance. The algorithm achieves greater accuracy by removing the line charging current.

The fault location algorithm does not need to explicitly determine the composite voltage at the fault. Instead, it eliminates the fault voltage from the equations for fault location by using other information instead.

For the purpose of fault location, the ABC quantities are represented by a single composite signal using the following base equation.

$$S_{(X)} = \frac{1}{3}(2S_{(A)} - bS_{(B)} - b^{*}S_{(C)})$$ **Eq. 10-44**

where b is a complex number defined as:

$$b = 1 + j\tan(\alpha)$$ **Eq. 10-45**

and b* is the conjugate of b, or mathematically:

$$b^{*} = 1 - j\tan(\alpha)$$ **Eq. 10-46**

where $\alpha = 45°$

The expanded Clarke transformation (also known as the alpha-beta transformation) shown is selected to yield non-zero operating signals under balanced and unbalanced conditions. This allows reducing the amount of exchanged information between devices and avoiding phase selection. The equation applies to the wye connection of signals under ABC phase rotation. For delta connections and ACB rotation, there is a small modification in this equation.

The following composite signals in (in per-unit values) are obtained from the base equation (first equation shown), taking into account system phase rotation, CT nominal values, and VT nominal values and connections as set under the phase VT bank of the first 87L source.

$$I_{LOC(A,B,C)} \rightarrow I_{LOC(X)},\ I_{REM1(A,B,C)} \rightarrow I_{REM1(X)},\ I_{REM2(A,B,C)} \rightarrow I_{REM2(X)}$$
$$V_{LOC(A,B,C)} \rightarrow V_{LOC(X)}$$

Eq. 10-47

where

$I_{LOC(A,B,C)}$ is the phasor of the local current, for phases A, B, and C

$I_{LOC(X)}$ is the phasor of the local composite (mixed) current

$I_{REM1(A,B,C)}$ is the phasor of the first remote current, for phases A, B, and C

$V_{LOC(A,B,C)}$ is the phasor of local A, B, and C voltages

$V_{LOC(X)}$ is the phasor of the local composite voltage

Composite currents are calculated locally at each terminal locally. Composite voltage is continuously transmitted to remote terminals, where upon receipt it is labeled as $V_{REM1(X)}$ for channel 1 and $V_{REM2(X)}$ for channel 2. The transmitted composite voltage signal is supervised by a VT fuse fail condition of the first source of 87L function. During VT fuse fail conditions, transmitted voltage is substituted with zero, signaling to remote peers that multi-ended fault location should be inhibited.

The impedance for fault location calculation (in per-unit values) is calculated as follows:

$$Z_{pu} = Z_{sec} \times \frac{CT_{sec}}{VT_{sec}} \text{ for wye-connected VTs}$$
$$Z_{pu} = \sqrt{3} \times Z_{sec} \times \frac{CT_{sec}}{VT_{sec}} \text{ for delta-connected VTs}$$

Eq. 10-48

Consequently, the positive-sequence line secondary impedance entered under in the fault locator menu yields following signals used for calculation. For two-terminal applications, we have:

$$Z_{1LINE} \rightarrow Z$$
$$L = \text{corresponding line length}$$

Eq. 10-49

For three-terminal applications, we have:

$$Z_{1LINE} \rightarrow Z_{LOC-T}$$
$$Z_{REM1-TAP} \rightarrow Z_{REM1-T}$$
$$Z_{REM2-TAP} \rightarrow Z_{REM2-T}$$
$$L_{LOC-T},\ L_{REM1-T},\ L_{REM2-T} = \text{corresponding lengths of the three line segments}$$

Eq. 10-50

For two-terminal applications, fault calculations can be executed directly using the signals above. For three-terminal applications, it is first necessary to define the faulted line segment. This is done by estimating the tap voltage as seen from all three line terminals.

$$V_{T(LOC)} = V_{LOC(X)} - Z_{LOC-T} \times I_{LOC(X)}$$
$$V_{T(REM1)} = V_{REM1(X)} - Z_{REM1-T} \times I_{REM1(X)}$$
$$V_{T(REM2)} = V_{REM2(X)} - Z_{REM2-T} \times I_{REM2(X)}$$

Eq. 10-51

The fault current is calculated as follows:

$$I_{FLT(X)} = I_{LOC(X)} + I_{REM1(X)} + I_{REM2(X)}$$

Eq. 10-52

The faulted segment can be found by recognizing that the sum of the voltage drops around a loop through the unfaulted segments is zero. The residual voltage phasors are computed for each loop. The loop with the lowest residual voltage contains the two unfaulted segments. Therefore, the differences between each pair of estimates is calculated as follows:

$$\begin{aligned} \Delta V_{LOC-REM1} &= |V_{T(LOC)} - V_{T(REM1)}| \\ \Delta V_{LOC-REM2} &= |V_{T(LOC)} - V_{T(REM2)}| \\ \Delta V_{REM1-REM2} &= |V_{T(REM1)} - V_{T(REM2)}| \end{aligned}$$

Eq. 10-53

The faulted segment is selected as follows:

$$\begin{aligned} &\text{If } \Delta V_{LOC-REM1} = \min(\Delta V_{LOC-REM1}, \Delta V_{LOC-REM2}, \Delta V_{REM1-REM2}) \\ &\text{and } \Delta V_{LOC-REM1} < \max(0.025 \times (|V_{T(LOC)}| + |V_{T(REM1)}|), 0.01\ \text{pu}) \\ &\text{then the fault is between the tap and remote terminal 2} \end{aligned}$$

Eq. 10-54

where

$$\begin{aligned} L &= L_{REM2-T} \\ Z &= Z_{REM2-T} \\ V_{TAP(X)} &= \frac{1}{2}(V_{T(LOC)} + V_{T(REM1)}) \\ I_{TAP(X)} &= I_{LOC(X)} + I_{REM1(X)} \\ V_{1(X)} &= V_{REM2(X)} \end{aligned}$$

Eq. 10-55

A similar set of equations is applied to determine whether the fault is between the tap and the local terminal or between the tap and remote terminal 1.

Next, having all the data prepared, the following universal equation is used to calculate the fault location:

$$\begin{aligned} D_{pu} &= \mathrm{Re}\left(\frac{\frac{V_{1(X)} - V_{TAP(X)}}{Z} + I_{TAP(X)}}{I_{FLT(X)}}\right) \\ D_{units} &= D_{pu} \times L \end{aligned}$$

Eq. 10-56

For this equation, two-terminal applications, the following equalities hold:

$$\begin{aligned} V_{1(X)} &= V_{LOC(X)} \\ V_{TAP(X)} &= V_{REM1(X)} \\ I_{TAP(X)} &= I_{REM1(X)} \\ I_{FLT(X)} &= I_{LOC(X)} + I_{REM1(X)} \end{aligned}$$

Eq. 10-57

For two-terminal applications, the distance is reported from the local relay. In three-terminal applications, the distance is reported from the terminal of a given line segment.

NOTE

Phase rotation must be the same at all line terminals for correct operation of the multi-ended fault locator.

10.6.2.2 Estimation of fault resistance

Once the fault is located by the multi-ended location method, the fault resistance can be estimated by the following equation.

$$R_F = \mathrm{Real}\left(\frac{V_F}{I_F}\right) \quad \textbf{Eq. 10-58}$$

where

R_F is the fault resistance

V_F is voltage at the fault point

I_F is current flowing into the fault point

Depending on the fault type, appropriate fault voltage and current signals are selected from the phase quantities before applying the equation above. The following equations describe the voltage and current quantities for the three-terminal applications, where the subscript (X) denotes the line terminal of the faulted segment/line, (TAP) denotes the tap point the fault section, and current flowing towards the fault from the tap point is the summation of currents of the two unfaulted line segments.

For AG faults:

$$V_F = V_{A(X)} - D_{pu} \cdot ((I_{A(X)} - I_{0(X)}) \cdot Z1 + I_{0(X)} \cdot Z0 + I_{0M(X)} \cdot Z0M) \quad \textbf{Eq. 10-59}$$

$$I_F = I_{A(X)} + I_{A(TAP)} \quad \textbf{Eq. 10-60}$$

where

Z0 is the impedance of the zero-sequence impedance of the faulted segment/line
Z0M is the mutual zero sequence impedance

For BG faults:

$$V_F = V_{B(X)} - D_{pu} \cdot ((I_{B(X)} - I_{0(X)}) \cdot Z1 + I_{0(X)} \cdot Z0 + I_{0M(X)} \cdot Z0M) \quad \textbf{Eq. 10-61}$$

$$I_F = I_{B(X)} + I_{B(TAP)} \quad \textbf{Eq. 10-62}$$

For CG faults:

$$V_F = V_{C(X)} - D_{pu} \cdot ((I_{C(X)} - I_{0(X)}) \cdot Z1 + I_{0(X)} \cdot Z0 + I_{0M(X)} \cdot Z0M) \quad \textbf{Eq. 10-63}$$

$$I_F = I_{C(X)} + I_{C(TAP)} \quad \textbf{Eq. 10-64}$$

For AB/ABG faults:

$$V_F = (V_{A(X)} - V_{B(X)}) - D_{pu} \cdot (I_{A(X)} - I_{B(X)}) \cdot Z1 \quad \textbf{Eq. 10-65}$$

$$I_F = \frac{1}{2}(I_{A(X)} + I_{A(TAP)} - I_{B(X)} - I_{B(TAP)}) \quad \textbf{Eq. 10-66}$$

For BC/BCG faults:

$$V_F = (V_{B(X)} - V_{C(X)}) - D_{pu} \cdot (I_{B(X)} - I_{C(X)}) \cdot Z1 \quad \textbf{Eq. 10-67}$$

$$I_F = \frac{1}{2}(I_{B(X)} + I_{B(TAP)} - I_{C(X)} - I_{C(TAP)}) \quad \textbf{Eq. 10-68}$$

For CA/CAG faults:

$$V_F = (V_{C(X)} - V_{A(X)}) - D_{pu} \cdot (I_{C(X)} - I_{A(X)}) \cdot Z1 \quad \textbf{Eq. 10-69}$$

$$I_F = \frac{1}{2}(I_{C(X)} + I_{C(TAP)} - I_{A(X)} - I_{A(TAP)}) \quad \textbf{Eq. 10-70}$$

For ABC faults:

$$V_F = \frac{1}{2}(V_{COMP(X)} - D_{pu} \cdot I_{COMP(X)} \cdot Z1 + V_{COMP(TAP)} - (1 - D_{pu}) \cdot I_{COMP(TAP)} \cdot Z1) \quad \textbf{Eq. 10-71}$$

$$I_F = I_{COMP(X)} + I_{COMP(TAP)} \quad \textbf{Eq. 10-72}$$

where

V_{COMP} and I_{COMP} are the composite voltage and composite current

I0M = IG/3 and IG is the ground current of the adjacent parallel line

The two terminal equations are similar, and only need replace the subscript of (X) and (TAP) with (LOC) and (REM).

10.6.2.3 Example

Consider a three-terminal, 500 kV application with no charging current compensation or zero-sequence removal. The phase rotation is ABC and the following CT and VT data is known.

Table 10-37: CT and VT application data for multi-ended example (assumes 87L and fault locator sources are identical)

Value	Relay 1	Relay 2	Relay 3
CT primary	1200 A	1000 A	1600 A
CT secondary	5 A	1 A	5 A
VT connection	wye	delta	wye
VT secondary	57.73 V	83.33 V	57.73 V
VT ratio	5000:1	6000:1	5000:1

The following table shows the tap settings.

Table 10-38: Tap settings for multi-ended example

Value	Relay 1	Relay 2	Relay 3
CT tap 1 for remote terminal 1	1000 / 1200 = 0.8333	1200 / 1000 = 1.200	1200 / 1600 = 0.750
CT tap 1 for remote terminal 2	1600 / 1200 = 1.3333	1600 / 1000 = 1.600	1000 / 1600 = 0.625

The following table shows the primary positive-sequence impedances and length for the line.

Table 10-39: Line length and positive sequence impedance for multi-ended example

Value	Relay 1 to tap	Relay 2 to tap	Relay 3 to tap
Impedance	21.29 Ω ∠80.5°	36.50 Ω ∠80.5°	16.73 Ω ∠80.5°
Length	70 km	120 km	55 km

The figure shows how the three relays are connected.

Figure 10-19: Relay connections for multi-ended fault locator example

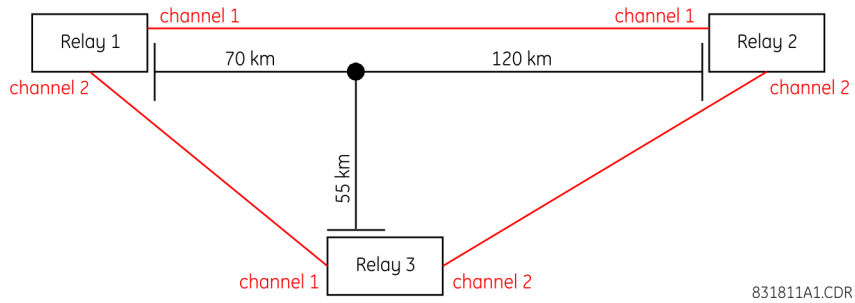

The following settings are entered into the relays by you. These values are calculated in secondary ohms as shown in the following tables.

Table 10-40: Line impedance settings (all angles are 80.5°)

Value	Relay 1	Relay 2	Relay 3
Local to tap	1.0219 sec. ohms (relay 1 to tap in relay 1 secondary ohms)	6.0833 sec. ohms (relay 2 to tap in relay 2 secondary ohms)	1.0707 sec. ohms (relay 3 to tap in relay 3 secondary ohms)
Remote 1 to tap	1.7520 sec. ohms (relay 2 to tap in relay 1 secondary ohms)	3.5483 sec. ohms (relay 1 to tap in relay 2 secondary ohms)	1.3626 sec. ohms (relay 1 to tap in relay 3 secondary ohms)
Remote 2 to tap	0.8030 sec. ohms (relay 3 to tap in relay 1 secondary ohms)	2.7883 sec. ohms (relay 3 to tap in relay 2 secondary ohms)	2.3360 sec. ohms (relay 2 to tap in relay 3 secondary ohms)

Assume that the following signals are measured by the relays when the fault locator is triggered.

Table 10-41: Relay measurements (physical inputs)

Value	Relay 1	Relay 2	Relay 3
F1	10.64 A ∠–87.5°	8.592 A ∠–88.5°	9.652 A ∠–43°
F2	1.652 A ∠88.9°	1.273 A ∠78.6°	5.201 A ∠–99°
F3	1.66 A ∠–31.2°	1.614 A ∠–43°	6.269 A ∠139.3°
F5	52.71 V ∠0.8°	76.943 V ∠24.579°	49.6 V ∠10.1°
F6	58.21 V ∠–121.4°	86.321 V ∠–98.052°	57.1 V ∠–115.6°
F7	58.93 V ∠121.9°	78.795 V ∠137.27°	59.12 V ∠130.8°

These measurements are shown as follows in per-unit values of the CT and VT nominal of the 87L source.

Table 10-42: Relay measurements (per-unit values)

Value	Relay 1	Relay 2	Relay 3
IA	2.128 pu ∠–87.5°	8.592 pu ∠–88.5°	1.9304 pu ∠–43°
IB	0.3304 pu ∠88.9°	1.273 pu ∠78.6°	1.0402 pu ∠–99°
IC	0.332 pu ∠–31.2°	1.614 pu ∠–43°	1.2538 pu ∠139.3°
VA (VAB)	0.91304 pu ∠0.8°	0.92335 pu ∠24.579°	0.85917 pu ∠10.1°
VB (VBC)	1.0083 pu ∠–121.4°	1.0359 pu ∠–98.052°	0.98909 pu ∠–115.6°
VC (VCA)	1.0208 pu ∠121.9°	0.94557 pu ∠137.27°	1.0241 pu ∠130.8°

When subjected to the expanded Clarke transform in the previous section, the local currents yield the following values (in relay per-unit values):

- Relay 1: 1.3839 pu ∠–84.504°
- Relay 2: 5.4844 pu ∠–85.236°
- Relay 3: 1.2775 pu ∠–56.917°

When subjected to the expanded Clarke transform in the previous section, the local voltages yield the following values (in per-unit values of the nominal primary phase-to-ground voltage):

- Relay 1: 0.38781 pu ∠0.26811°
- Relay 2: 0.30072 pu ∠–12.468°
- Relay 3: 0.37827 pu ∠8.9388°

Since they have a common per-unit base, the composite voltages are used at all locations. The currents are ratio matched using the tap settings.

For example, the composite current at relay 1 is 1.3839 pu of its local CT; that is, 1.3839 × 1200 A = 1.6607 kA. When calculated at relay 2 from the data sent from relay 1 to relay 2, this value is 1.6607 kA / 1000 A = 1.6607 pu of the relay 2 CT. This is due to the procedure of applying tap settings to the received phase currents before calculating the composite signal.

As a result, the three relays work with the following signals.

Table 10-43: Composite signals at all three relays

Value	Relay 1	Relay 2	Relay 3
$V_{LOC(X)}$	0.38781 pu ∠0.26811°	0.30072 pu ∠–12.468°	0.37827 pu ∠8.9388°
$V_{REM1(X)}$	0.30072 pu ∠–12.468°	0.38781 pu ∠0.26811°	0.38781 pu ∠0.26811°
$V_{REM2(X)}$	0.37827 pu ∠8.9388°	0.37827 pu ∠8.9388°	0.30072 pu ∠–12.468°
$I_{LOC(X)}$	1.3839 pu ∠–84.504°	5.4844 pu ∠–85.236°	1.2775 pu ∠–56.917°
$I_{REM1(X)}$	4.5704 pu ∠–85.236°	1.6607 pu ∠–84.504°	1.0379 pu ∠–84.504°
$I_{REM2(X)}$	1.7033 pu ∠–56.917°	2.0439 pu ∠–56.917°	3.4278 pu ∠–85.236°

The line impedances entered in secondary ohms are recalculated as follows (refer to the previous section for equations).

Table 10-44: Per-unit line impedance

Value	Relay 1	Relay 2	Relay 3
Local to tap	0.088509 pu ∠80.5°	0.12644 pu ∠80.5°	0.092735 pu ∠80.5°
Remote 1 to tap	0.15174 pu ∠80.5°	0.073754 pu ∠80.5°	0.11801 pu ∠80.5°
Remote 2 to tap	0.069551 pu ∠80.5°	0.057957 pu ∠80.5°	0.20232 pu ∠80.5°

Using the data in the previous two tables, the tap voltages are calculated as follows (refer to the previous section for equations).

Table 10-45: Calculated tap voltages using terminal data

Value	Relay 1	Relay 2	Relay 3
$V_{T(LOC)}$	0.26581 pu ∠2.2352°	0.39755 pu ∠–178.9°	0.26535 pu ∠2.4583°
$V_{T(REM1)}$	0.39758 pu ∠–178.9°	0.26582 pu ∠2.2351°	0.26581 pu ∠2.2352°
$V_{T(REM2)}$	0.26535 pu ∠2.4583°	0.26535 pu ∠2.4587°	0.39758 pu ∠–178.9°

From this table, it is visible that

- Looking from relay 1, there is no fault between the tap and the local terminal and between the tap and remote 2 terminal. Therefore, the fault must be between the remote 1 terminal = relay 2 and the tap.
- Looking from relay 2, there is no fault between the tap and the remote 1 terminal, and between the tap and remote 2 terminal. Therefore, the fault must be between the local terminal = relay 2 and the tap.
- Looking from relay 3, there is no fault between the tap and the remote 1 terminal, and between the tap and the local terminal. Therefore, the fault must be between the remote 2 terminal = relay 2 and the tap.

Note that the correct value of the tap voltage is equal for all three relays. This is expected since the per-unit base for the composite voltages is equal for all three relays.

The three relays calculate the differences as follows (refer to the previous section for equations).

Table 10-46: Tab voltage differences using terminal data

Value	Relay 1	Relay 2	Relay 3
LOC-REM1	0.66337 pu	0.66334 pu	0.0011344 pu

Value	Relay 1	Relay 2	Relay 3
LOC-REM2	0.0011344 pu	0.66286 pu	0.66289 pu
REM1-REM2	0.66289 pu	0.001137 pu	0.66337 pu

Applying the results of this table to the equations in the previous section, the algorithm arrives at the following:

- Relay 1 determines remote 1 to tap
- Relay 2 determines local to tap
- Relay 3 determines remote 2 to tap

As a result, the relays use the following data for further calculations.

Table 10-47: Input data for main fault location

Value	Relay 1	Relay 2	Relay 3
Fault segment	2	1	3
L	120 km	120 km	120 km
Z	0.1517 pu ∠80.5°	0.1264 pu ∠80.5°	0.2023 pu ∠80.5°
V_{TAP}	0.26558 pu ∠2.3467°	0.26559 pu ∠2.3468°	0.26558 pu ∠2.3467°
V_1	0.30072 pu ∠–12.468°	0.30072 pu ∠–12.468°	0.30072 pu ∠–12.468°
I_{TAP}	2.9991 pu ∠–69.256°	3.599 pu ∠–69.256°	2.2494 pu ∠–69.256°
I_{FLT}	7.4992 pu ∠–78.915°	8.999 pu ∠–78.915°	5.6244 pu ∠–78.915°

The data presented are effectively identical. The difference in current magnitudes results from different per-unit bases at the three relays (1200 A, 1000 A, and 1600 A). The difference in impedances results from different CT and VT ratios at the three relays.

The tap voltage is the actual voltage at the tap (0.26558 × 500 kV / $\sqrt{3}$ = 76.67 kV). The V_1 voltage is the voltage at relay 2 (0.30072 pu = 86.81 kV).

The tap current is the total feed from the tap towards the fault and is 2.9991 × 1200 A = 3.599 pu × 1000 A = 2.2494 pu × 1600 A = 3.599 kA. The fault current is 7.4992 pu × 1200 A = 8.999 pu × 1000 A = 5.6244 pu × 1600 A = 8.999 kA.

The data results in the following fault locations:

- Relay 1 fault location = 0.4173 pu or 0.4173 × 120 km = 50.0704 km from its remote terminal 1 (relay 2)
- Relay 2 fault location = 0.4172 pu or 0.4172 × 120 km = 50.07 km from local terminal (relay 2)
- Relay 3 fault location = 0.4173 pu or 0.4173 × 120 km = 50.0704 km from its remote terminal 2 (relay 2)

The actual fault location in this example was 50.00 km from relay 2, as shown in the figure.

Figure 10-20: Actual fault location

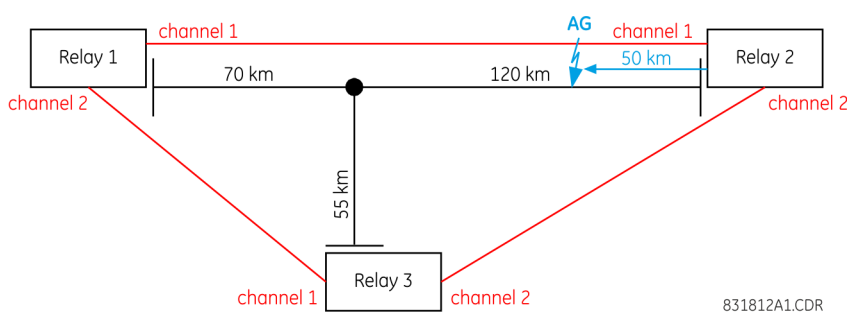

10.6.3 Single-ended fault locator

When the multi-ended fault locator cannot be executed due to communication channel problems or invalid signals from remote terminals, then the single-ended method is used to report fault location.

Fault type determination is required for calculation of fault location. The algorithm uses the angle between the negative and positive sequence components of the relay currents. To improve accuracy and speed of operation, the fault components of the currents are used; that is, the pre-fault phasors are subtracted from the measured current phasors. In addition to the angle relationships, certain extra checks are performed on magnitudes of the negative and zero-sequence currents.

The single-ended fault location method assumes that the fault components of the currents supplied from the local (A) and remote (B) systems are in phase. The figure shows an equivalent system for fault location.

Figure 10-21: Equivalent system for fault location

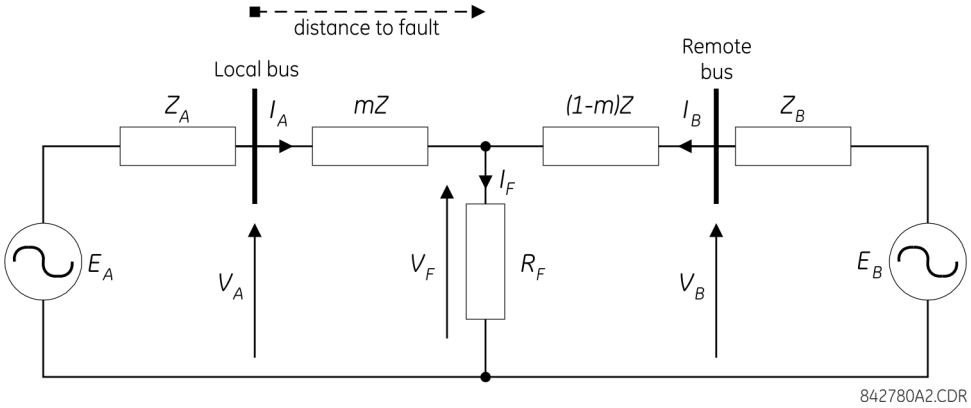

The following equations hold true for this equivalent system.

$$V_A = m \cdot Z \cdot I_A + R_F \cdot I_F \qquad \textbf{Eq. 10-73}$$

where

m = sought pu distance to fault
Z = positive sequence impedance of the line
I_F = fault current flowing through the fault point

The fault network during a fault can be decomposed into a pre-fault and a pure-fault network. Therefore, the fault current I_F is calculated as follows by using the current division rule in the pure-fault network.

$$I_F = \frac{Z_A + Z + Z_B}{(1-m)Z + Z_B} \cdot I_{AF} = \frac{1}{d} \cdot I_{AF} \qquad \textbf{Eq. 10-74}$$

where

d is the current distribution factor, which is a complex value

Substituting the second equation into the first equation and multiplying both sides by the complex conjugate of IAF,

$$V_A \cdot I^*_{AF} = m \cdot Z \cdot I_A \cdot I^*_{AF} + R_F \cdot \frac{1}{d} \cdot |I_{AF}|^2 \qquad \textbf{Eq. 10-75}$$

where

* denotes complex conjugate

Assuming the system is homogeneous, d is then a real number. The fault resistance does not have any imaginary part. The preceding equation solved for the unknown m yields the following fault location algorithm:

$$m = \frac{\mathrm{Im}(V_A \cdot I_{AF}^*)}{\mathrm{Im}(Z \cdot I_A \cdot I_{AF}^*)} \qquad \textbf{Eq. 10-76}$$

where

Im( ) stands for the imaginary part of a complex number

Depending on the fault type, appropriate voltage and current signals are selected from the phase quantities before applying the preceding equation (the superscripts denote phases, the subscripts denote stations).

For AG faults:

$$V_A = V_A^A, \quad I_A = I_A^A + K_0 \cdot I_{0A} + Z_{0M}/Z \cdot I_{0M}, \quad I_{AF} = I_A^A - I_{Apre}^A \qquad \textbf{Eq. 10-77}$$

For BG faults:

$$V_A = V_A^B, \quad I_A = I_A^B + K_0 \cdot I_{0A} + Z_{0M}/Z \cdot I_{0M}, \quad I_{AF} = I_A^B - I_{Apre}^B \qquad \textbf{Eq. 10-78}$$

For CG faults:

$$V_A = V_A^C, \quad I_A = I_A^C + K_0 \cdot I_{0A} + Z_{0M}/Z \cdot I_{0M}, \quad I_{AF} = I_A^C - I_{Apre}^C \qquad \textbf{Eq. 10-79}$$

For AB and ABG faults:

$$V_A = V_A^A - V_A^B, \quad I_A = I_A^A - I_A^B, \quad I_{AF} = (I_A^A - I_A^B) - (I_{Apre}^A - I_{Apre}^B) \qquad \textbf{Eq. 10-80}$$

For BC and BCG faults:

$$V_A = V_A^B - V_A^C, \quad I_A = I_A^B - I_A^C, \quad I_{AF} = (I_A^B - I_A^C) - (I_{Apre}^B - I_{Apre}^C) \qquad \textbf{Eq. 10-81}$$

For CA and CAG faults:

$$V_A = V_A^C - V_A^A, \quad I_A = I_A^C - I_A^A, \quad I_{AF} = (I_A^C - I_A^A) - (I_{Apre}^C - I_{Apre}^A) \qquad \textbf{Eq. 10-82}$$

where K_0 is the zero sequence compensation factor (for the first six equations)

Z_{0M} is the mutual zero sequence impedance

$I_{0M} = I_G/3$ and I_G is the ground current of the adjacent line. The I_{0M} compensation term is applied for the entirely parallel line.

For ABC faults, all three AB, BC, and CA loops are analyzed and the final result is selected based upon consistency of the results.

The element calculates the distance to the fault (with m in miles or kilometers) and the phases involved in the fault.

The relay allows locating faults from delta-connected VTs. If the **FAULT REPORT 1 VT SUBSTITUTION** setting is set to "None," and the VTs are connected in wye, the fault location is performed based on the actual phase to ground voltages. If the VTs are connected in delta, fault location is suspended.

If the **FAULT REPORT 1 VT SUBSTITUTION** setting value is "V0" and the VTs are connected in a wye configuration, the fault location is performed based on the actual phase to ground voltages. If the VTs are connected in a delta configuration, fault location is performed based on the delta voltages and externally supplied neutral voltage:

$$V_A = \frac{1}{3}(V_N + V_{AB} - V_{CA})$$

$$V_B = \frac{1}{3}(V_N + V_{BC} - V_{AB})$$

$$V_B = \frac{1}{3}(V_N + V_{CA} - V_{BC}) \qquad \textbf{Eq. 10-83}$$

If the **FAULT REPORT 1 VT SUBSTITUTION** setting value is "I0" and the VTs are connected in a wye configuration, the fault location is performed based on the actual phase to ground voltages. If the VTs are connected in a delta configuration, fault location is performed based on the delta voltages and zero-sequence voltage approximated based on the zero-sequence current:

$$V_A = \frac{1}{3}(V_{AB} - V_{CA}) - Z_{SYS0} I_0$$

$$V_B = \frac{1}{3}(V_{BC} - V_{AB}) - Z_{SYS0} I_0$$

$$V_B = \frac{1}{3}(V_{CA} - V_{BC}) - Z_{SYS0} I_0 \qquad \textbf{Eq. 10-84}$$

where Z_{SYS0} is the equivalent zero-sequence impedance behind the relay as entered under the fault report setting menu.

Figure 10-22: Fault locator scheme

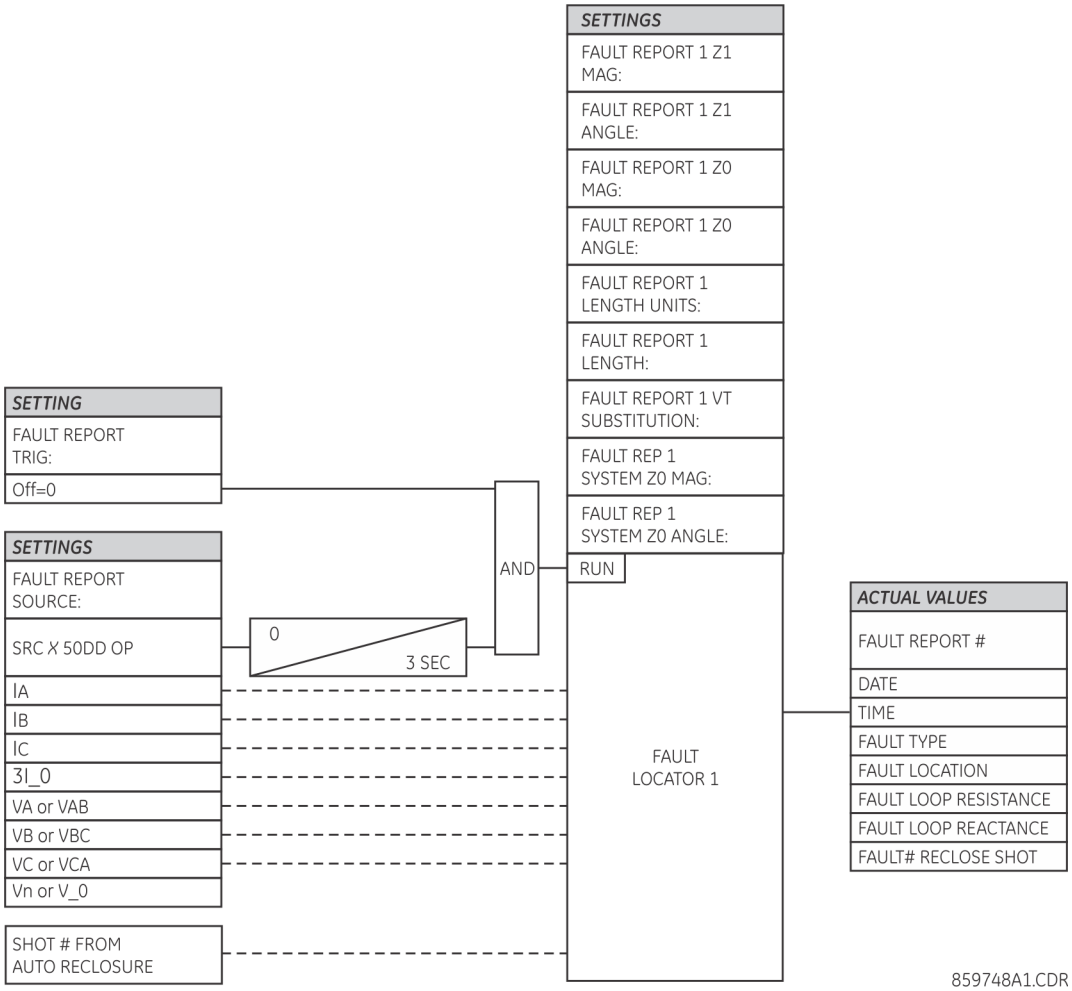

NOTE

Since the fault locator algorithm is based on the single-end measurement method, in three-terminal configuration the estimation of fault location may not be correct at all three terminals especially if fault occurs behind the line's tap respective to the given relay.

L90 Line Current Differential System

Chapter 11: Maintenance

This chapter outlines monitoring, maintenance, repair, storage, and disposal of the hardware and software.

11.1 Monitoring

Devices and data can be monitored.

11.1.1 Devices with Site Targets

To view an overview of devices:

1. Access the **Site Targets** item in the Online Window area, below the list of devices. It can take a few minutes for all devices to be read.
2. Acknowledge any messages for unaccessible devices. The Site Targets window opens when done.

Figure 11-1: Site Targets window

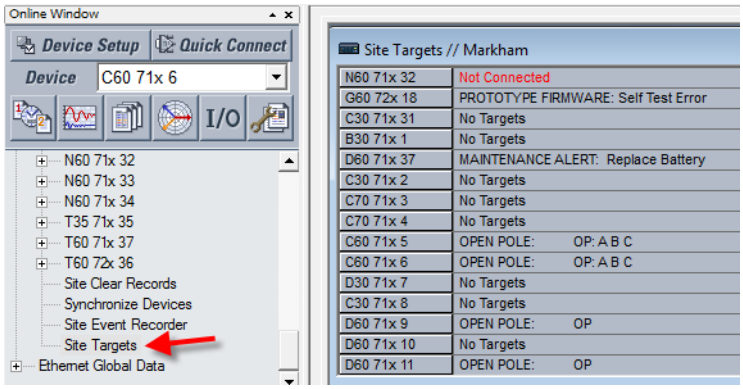

11.1.2 Data with Modbus Analyzer

Use the Modbus Analyzer under **Maintenance > Modbus Analyzer** to monitor the values of the UR device. Use the Modbus memory map addresses outlined in the UR Family Communications Guide for the entries.

The upper part of the window displays values. The lower part of the window is for factory service use.

The first row in the figure shows that Contact Output 1 operation is being monitored. Its Modbus address is CAFA. The actual value read from the device is 0, which means that it is off.

The second row in the figure shows the Contact Output 1 Name. It has a Modbus address of CAF0 and a default value of "Cont Op 1." None of **Selection** column settings render this value because they present the information based on numbering systems.

Figure 11-2: Modbus Analyzer used to monitor actual values on a UR

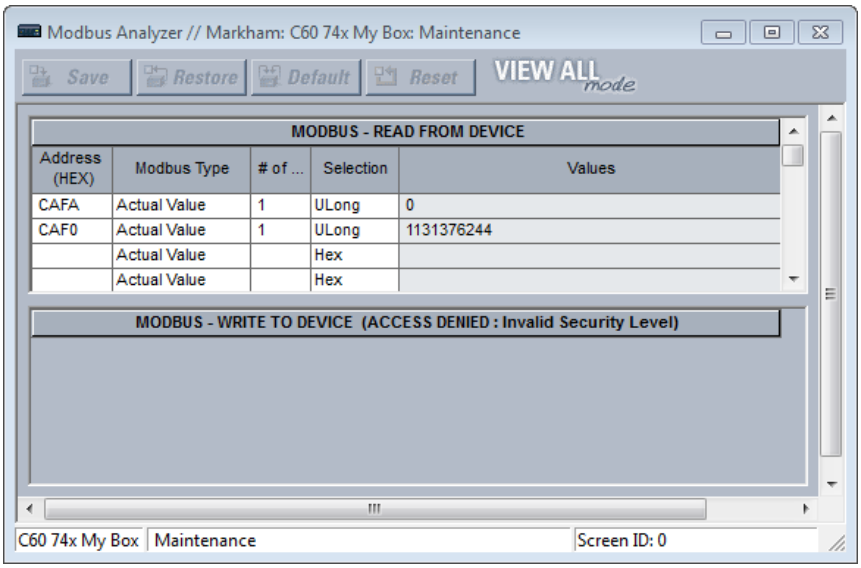

Address (HEX) — Modbus address in hexadecimal. See the Modbus memory map in the UR Family Communications Guide or in the web interface (enter IP address of UR device in a web browser).

Modbus Type
Actual Value — To read the data in the UR device
Setting — To read a setting in the UR device
Coil — To read a command in the UR device

 # of — Element, input, or output to read. An example is 1 for Contact Output 1.

Selection (examples demonstrate various ways to represent 0)
Hex — A decimal numbering system based on 16 possible values, from 0 to 9 and A to F. An example is 0x0000.
Char — A single unicode character, such as C. An example is 0.
Int — A 32-bit number, either positive or negative. An example is 0.
UInt — Unsigned 32-bit integer, which means that it cannot be negative but can be twice as large as a signed integer. An example is 0.
Long — A 64-bit number, either positive or negative. An example is 0.
ULong — Unsigned 64-bit number, which means that it cannot be negative but can be twice as large as a signed 64-bit number. An example is 0.
Float — A numbering system with no fixed number of digits before or after the decimal point. An example is 0.000000.
Binary — A numbering system using 0 and 1. An example is 0000-0000-0000-0000.

Entries are not saved when closing the window.

11.2 General maintenance

The L90 requires minimal maintenance. As a microprocessor-based relay, its characteristics do not change over time. Expected service life is 20 years for UR devices manufactured June 2014 or later when applied in a controlled indoor environment and electrical conditions within specification.

While the L90 performs continual self-tests, it is recommended that maintenance be scheduled with other system maintenance. This maintenance can involve in-service, out-of-service, or unscheduled maintenance.

11.2.1 In-service maintenance

1. Visual verification of the analog values integrity, such as voltage and current (in comparison to other devices on the corresponding system).
2. Visual verification of active alarms, relay display messages, and LED indications.
3. LED test.
4. Visual inspection for any damage, corrosion, dust, or loose wires.
5. Event recorder file download with further events analysis.

11.2.2 Out-of-service maintenance

1. Check wiring connections for firmness.
2. Analog values (currents, voltages, RTDs, analog inputs) injection test and metering accuracy verification. Calibrated test equipment is required.
3. Protection elements setting verification (analog values injection or visual verification of setting file entries against relay settings schedule).
4. Contact inputs and outputs verification. This test can be conducted by direct change of state forcing or as part of the system functional testing.
5. Visual inspection for any damage, corrosion, or dust.
6. Event recorder file download with further events analysis.
7. LED Test and pushbutton continuity check.

NOTICE To avoid deterioration of electrolytic capacitors, power up units that are stored in a de-energized state once per year, for one hour continuously.

11.2.3 Unscheduled maintenance (system interruption)

View the event recorder and oscillography or fault report for correct operation of inputs, outputs, and elements.

11.3 Retrieve files

Data, oscillography, log, events, routing, ARP, and other files can be transferred using the EnerVista software to a computer or to a USB flash drive when using the graphical front panel. These files can be requested by technical support staff.

To retrieve a file using EnerVista software:

1. If the CyberSentry option is enabled, log in to the EnerVista software using the Administrator role.
2. In the Online Window area of EnerVista, access **Maintenance > Retrieve File**. The window opens.
3. Note the destination folder to which the file is to be saved at the top and change it if required. You can copy the path or open the folder for convenience at this time.
4. Select the file to download from the UR device.

5. Click the **Read File** button. The file is saved to the destination folder. The EnerVista window remains open to download additional files.

To retrieve a file using a USB drive:

1. Insert the USB drive into the bottom USB port on the graphical front panel. The page displays on the front panel.
2. Using the Up or Down pushbuttons on the front panel, select the file.
3. Press the **COPY** pushbutton. The files are copied from the L90 to the USB drive.

NOTICE Do not unplug the USB drive while copying is in progress, else the USB drive can be compromised.

4. When done, to exit unplug the USB drive or press the **ESCAPE** pushbutton.

11.3.1 CyberSentry security event files

CyberSentry security events are available in the following two files: SECURITY_EVENTS.CSV and SETTING_CHANGES.LOG.

11.3.1.1 Security events file

The figure shows the content for the SECURITY_EVENTS.CSV file.

Figure 11-3: Security events file

	A	B	C	D	E	F	G	H	I	J
1	FORMAT	EVENT_INFO_1	Event Number	Data/Time	Username	IP Address	Role	Activity Value	Change Method	
2		EVENT_INFO_1	71	Feb 08 2016 10:07:20.893820	Observer	10.14.127.1	0	14	5	
3		EVENT_INFO_1	72	Feb 08 2016 10:07:20.931321	Observer	10.14.127.1	0	15	5	
4		EVENT_INFO_1	73	Feb 08 2016 10:07:41.314660	Administrator	10.14.127.1	1	14	5	
5		EVENT_INFO_1	74	Feb 08 2016 10:07:54.383404	Administrator	10.14.127.1	1	10	5	
6		EVENT_INFO_1	75	Feb 08 2016 10:07:58.187574	Administrator	10.14.127.1	1	9	5	
7		EVENT_INFO_1	76	Feb 08 2016 10:08:01.991740	Administrator	10.14.127.1	1	6	5	
8		EVENT_INFO_1	77	Feb 08 2016 10:08:42.908413	Administrator	10.14.127.1	1	6	5	
9		EVENT_INFO_1	78	Feb 08 2016 10:08:43.493822	Administrator	10.14.127.1	1	6	5	
10		EVENT_INFO_1	79	Feb 08 2016 10:09:46.908404	Administrator	10.14.127.1	1	6	5	
11		EVENT_INFO_1	80	Feb 08 2016 10:14:44.958406	Keypad	0.0.0.0	3	14	1	

Time — Local time.

Activity — The actual security event.

1 = Authentication Failed
2 = User Lockout
3 = FW Upgrade
4 = FW Lock
5 = Settings Lock
6 = Settings Change, this can fill the entire event log. Hence it is supported by the already existing SETTINGS_CHANGE.LOG file. This event is not required.
7 = Clear Oscillography command
8 = Clear Data Logger command
9 = Clear Demand Records command
10 = Clear Energy command
11 = Reset Unauthorized Access
12 = Clear Teleprotection Counters
13 = Clear All Records
14 = Role Log out
15 = Role Log in

Change Method — Format code F229 for the settings control change method.

0 = None
1 = Keypad
2 = Front port
3 = COM1 (not used)
4 = COM2 (RS485)
5 = Ethernet

11.3.1.2 Setting changes file

The SETTING_CHANGES.LOG file stores all the setting changes. A total of 1024 events are stored in a circular buffer in non-volatile memory.

Figure 11-4: Setting changes file

```
SETTING_CHANGES.LOG - Notepad
File  Edit  Format  View  Help
FORMAT,CHANGE_INFO,Data/Time,Old Value,New Value,Data Item,Modbus Address
CHANGE_INFO,Feb 05 2016 11:06:41.550070,No,No,Clear All Relay Records Command,0xC434
CHANGE_INFO,Feb 05 2016 11:08:30.535489, 1.0s, 1.1s,Flash Message Time,0x4050
CHANGE_INFO,Feb 05 2016 11:09:01.877154,No,No,Event Recorder Clear Command,0x3406
CHANGE_INFO,Feb 05 2016 11:09:10.243824,No,No,Oscillography Clear Data,0x3011
CHANGE_INFO,Feb 05 2016 11:10:05.820902,Virt Op 1,VirtOp1 IOPT,Virtual Output x Name,0xC130
CHANGE_INFO,Feb 05 2016 11:18:28.745903,No,No,Energy Clear Command,0x1D60
CHANGE_INFO,Feb 05 2016 11:18:32.960484,No,No,Reset Unauthorized Access,0x2230
CHANGE_INFO,Feb 05 2016 11:21:31.975071, 1.1s, 1.2s,Flash Message Time,0x4050
CHANGE_INFO,Feb 05 2016 11:22:09.393817,Disabled,Enabled,Virtual Output x Events,0xC136
CHANGE_INFO,Feb 05 2016 11:22:09.995902,Virt Op 2,VirtOp RST1,Virtual Output x Name,0xC138
CHANGE_INFO,Feb 05 2016 11:22:09.997997,Disabled,Enabled,Virtual Output x Events,0xC138
CHANGE_INFO,Feb 05 2016 11:25:59.914652,Relay-1,Markham Site,Relay Name,0x43E1
```

11.4 Convert device settings

Settings files can be upgraded or downgraded to other firmware versions. For example, version 7.4 settings can be upgraded to version 7.6.

Settings are reset to factory default upon conversion.

When using IEC 61850, additional configuration is required. Contact GE for guidance before converting settings.

To convert settings:

1. If not already in the Offline Window area, right-click the online device in the EnerVista software and select the **Add Device to Offline Window** option. This copies the settings to the Offline Window area. Any message about file repair usually means that settings were missing in the original file and have been added with default values to the new file.
2. Make a copy of the settings file in the Offline Window area by right-clicking the file and selecting **Duplicate Device**. A copy of the file is made and the file name start with "Copy of." Optionally rename the file by right-clicking it and selecting the **Rename Device** option.
3. Convert the settings by right-clicking one of the files in the Offline Window and selecting the **Convert Device Settings** option.

   GE recommends converting settings in firmware steps, for example when converting from 6.0 to 7.4x, convert first to 7.0 then 7.4 in order to follow embedded conversion rules and keep settings.

   The settings convert and a report generates.

Figure 11-5: Upgrade settings

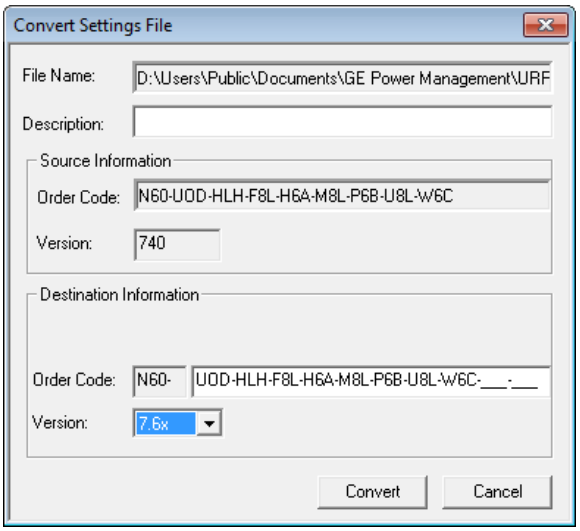

4. Review the conversion report. The values of all settings that have been defaulted during conversion are not listed in the conversion report; to find the value of a setting before conversion, inspect the device backup file made before conversion.

   In the example shown here, settings have been reset to factory defaults and several settings are new in firmware version 7.6 under **Settings > System Setup > Switches** and **Breakers**.

Figure 11-6: Conversion report

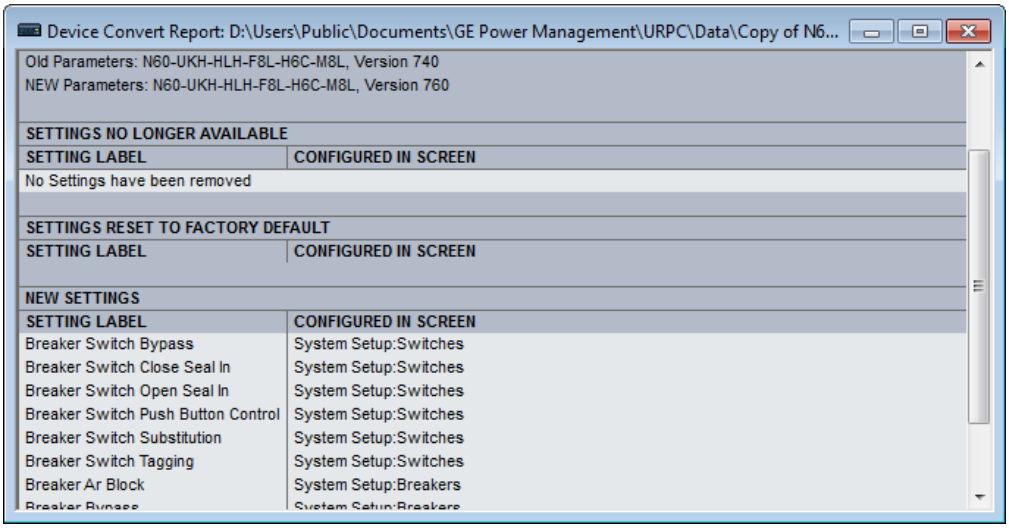

5. Change settings in the new file, for example by looking at the original file.
6. Write the converted file to the device, for example by dragging and dropping from the Offline Window to the Online Window.
7. Check settings and operation.

11.5 Copy settings to other device

Settings from one L90 device can be copied to another L90 device for rapid deployment. The order codes must match. See the Settings File section at the beginning of the Interfaces chapter for a list of settings not deployed.

To apply settings to another device:

1. Right-click the device in the Online window and select the **Add Device to Offline Window** option. A window opens.
2. Check the file path and name the file, then click the **Receive** button. An example is to save the files in D:\Users\Public\Public Documents\GE Power Management\URPC\Data\ and to name the source device L90_Deployment. At the prompt, confirm the action. The settings are saved in .cid, .icd, and .urs files, and the entry displays in the Offline window area.
3. Right-click the device in the Offline window area and select the **Duplicate Device** option. The device is copied with a prefix of "Copy of." Multiple duplicates results in files being named "Copy of Copy of" for example, which can be avoided by deleting the folder copies from the path shown on mouse-over.
4. Right-click the copied device and rename it.
5. Right-click the copied device and select the **Edit Device Properties** option. Make the changes for the new device.
6. Send the file to new device by dragging and dropping it into the Online Window area. Or right-click and select the **Write Settings to Device** option.
7. Update the remaining settings, such as IP address.

11.6 Compare settings

Settings are comparable against default values and between two UR devices.

Some of the IEC 61850 settings use floating point data, which guarantees accurate representation of real numbers up to seven digits. Numbers with more than seven digits are approximated within a certain precision. This can result in differences between what is entered and what is saved, and for example results in differences shown on a settings comparison report.

When comparing two settings files with the graphical front panel, all graphical front panel features are compared except for the single-line diagrams.

11.6.1 Compare against defaults

To compare settings against default values:

1. Right-click the device in the Offline Window area and select **Compare Settings With Defaults**. The file generates and the number of differences displays.
2. To save the report, click **File > Save As**, select the TXT, PDF, or CSV format from the drop-down list, and enter a name for the file.

In the figure, the first entry (red) is from the device, while the second (green) is the default value.

Figure 11-7: Device settings compared with default values

#		Setting Name	Group	Module	Item	Value
1	-	Contact Input Debounce Time	1	1	1	2.0 ms
2	+	Contact Input Debounce Time	1	1	1	6.0 ms
3	-	Contact Input Debounce Time	1	2	1	2.0 ms
4	+	Contact Input Debounce Time	1	2	1	6.0 ms
5	-	Contact Input Debounce Time	1	3	1	2.0 ms
6	+	Contact Input Debounce Time	1	3	1	6.0 ms

11.6.2 Compare two devices

Preferences are set under **File > Preferences** as follows:

- **Comparison Report: Sequential File 1, File 2 Layout** — When disabled (default), the report shows only what differs, as shown in the previous figure. When enabled, the report indicates differences by device.

Figure 11-8: Device settings compared between two devices, displayed sequentially

```
1,  File2 , Existing 7.40 IEC61850 settings removed., ____, New IEC61850 settings added with default values.
2,  File2 , Bkr Phase A Open, 1__1__1, 0 (OFF)
3,  File2 , Bkr Phase B Open, 1__1__1, 0 (OFF)
4,  File2 , Bkr Phase C Open, 1__1__1, 0 (OFF)
5,  File2 , Breaker Restrike Block, 1__1__1, 0 (OFF)
6,  File2 , Breaker Restrike Block, 1__2__1, 0 (OFF)
7,  File2 , Breaker Restrike Brk Open, 1__1__1, 0 (OFF)
8,  File2 , Breaker Restrike Brk Open, 1__2__1, 0 (OFF)
9,  File2 , Breaker Restrike Cls Cmd, 1__1__1, 0 (OFF)
10  File2 , Breaker Restrike Cls Cmd, 1__2__1, 0 (OFF)
```

There are two ways to compare devices: devices in the Offline area or between Online and Offline devices.

To compare settings of two devices in the Offline Window area:

1. Right-click a first device in the Offline Window area and select **Compare Two Devices**.
2. In the window that opens, select a second device and click the **Receive** button. The file generates and the number of differences displays.
3. To save the report, click **File > Save As**, select the TXT, PDF, or CSV format from the drop-down list, and enter a name for the file.

To compare settings between Online and Offline devices:

1. Right-click a device in the Online Window area and select **Compare with Device**.
2. In the window that opens, enter a path/file name at the bottom o f the window.
3. Select the second device.
4. Click the **OK** button. The file generates, and the differences are highlighted in red, which is for the first device.

11.7 Back up and restore settings

Back up a copy of the in-service settings for each commissioned UR device, so as to revert to the commissioned settings after inadvertent, unauthorized, or temporary setting changes are made, after the settings defaulted due to firmware upgrade, or when the device has to be replaced. This section describes how to backup settings to a file and how to use that file to restore the settings to the original relay or to a replacement relay.

11.7.1 Back up settings

The following file types can be saved:

- URS — UR settings file — When the IEC 61850 option is not present
- IID — Instantiated IED capability description file — Actual settings on UR
- ICD — IED Capability Description file — Default settings on UR
- CID — Configured IED description file — Settings sent to the UR (may or may not contain the present settings)

UR device settings can be saved in a backup URS file using the EnerVista UR Setup software. The URS file is the standard UR settings file. For an introduction to settings files in the URS format, see the beginning of the Interfaces chapter.

When the IEC 61850 option is present, the settings can be saved alternatively in a backup IID file either using the EnerVista UR Setup software in online mode or by using any of the supported file transfer protocols. The IID file is one of several IEC 61850 Substation Configuration Language (SCL) file types; see the IEC 61850 chapter in the UR Series Communications Guide for an introduction to SCL.

"TBD" displays when a setting in a modeled element is configured with a non-modeled operand. For example, Phase IOC is modeled in a firmware release, while the LED operands are not modeled. If the block setting of the Phase IOC is configured with LED operands, its displays as TBD in IID and CID files, the web interface, or in an MMS client.

The options that display in the EnerVista software when right-clicking depend on device options.

Preferences are set in the **File > Preferences > IEC 61850** menu. There are two options as follows:

- **Preserve custom attributes when importing SCD/CID files** — Applies to the **Add Device to Offline Window** option. When enabled, the IID file also is to be copied to the computer. The IID file that is retrieved from the relay is therefore assumed to be in synchronization with the resulting .urs file, and in fact in this situation the IID file on the computer is a copy of the IID file that was read from the online device. When disabled, the IID file on the computer is to be left unchanged. The location of the IID file is C:\ProgramData\GE Power Management\urpc\Offline, for example.
- **Do not update IID file when updating SCL files** — When enabled (default), an IID file is not to be created on the computer and if one is already present there, it is neither removed nor updated. Have this option enabled when you want to keep the IID file from the UR device instead of from another tool. The location of the file is C:\ProgramData\GE Power Management\urpc\Offline, for example.

An Environment backup stores a list of sites and devices in the Online and Offline Window areas. Settings files are not contained within the environment file. If a settings file is moved, renamed, or deleted after the backup, it is removed from the Offline Window during the restore.

To save a settings file in the URS format in EnerVista Online Window:

1. In EnerVista, connect to the device in the Online Window area.
2. Right-click the device name in the Online Window area and select **Add Device to Offline Window**. A window opens.
3. Select or enter a file name and location, and click the **Receive** button. A .urs file is created in the Offline Window area.

To create a new settings file in the URS format in EnerVista Offline Window:

1. In EnerVista, right-click in the Offline Window area and select **New Device**. A window opens.
2. Change the file name at the end of the **Path** field, keeping the .urs extension.
3. From the **Associate File with Device** drop-down list, select the UR device. Other fields complete automatically. Otherwise, when you do not select a device from the drop-down list, all fields need to be completed manually and only devices that match the entered order code and version display in the list.
4. The **Serial # Lock** field is the serial number of the intended device. It ensures that the settings file is sent only to the specific relay that matches the serial number.
5. Click the **OK** button to create the .urs file in the Offline Window area.

To save settings in the IID format in EnerVista Online Window:

1. In EnerVista, connect to the device in the Online Window area.
2. Right-click the device name in the Online Window area and select **Read IID File**. The option is not present when the device does not have the IEC 61850 option. A window opens when successful.
3. Select or enter a file name and location, and click the **Receive** button. A .iid file is created.

To save settings in the IID format in EnerVista Offline Window:

1. In EnerVista, right-click the device in the Offline Window area.
2. Select the **Create IID File** option for firmware below 7.3. The option is not always available. Select the **Save As** option for firmware 7.3 and later, and select the IID option from drop-down list.

No file is generated. The IID file on the computer is copied to the location specified.

3. If the **Do not update IID file when updating SCL files** preference is enabled under **File > Preferences > IEC 61850**, then a message displays to that effect. This means that there is no IID file available on the computer to be copied, so a new one is generated.

To save settings in the IID format using TFTP:

1. On a computer on the same subnetwork as the UR device, open a command window.
2. Enter

```
TFTP <IP address> GET ur.iid <destination>
```

where

<IP address> is the IP address of the UR device
ur.iid is the internal name of the IID file in the UR device
<destination> is the path and file name of the IID file. If omitted, the file is saved as ur.iid in the command window default directory.

An example is

```
TFTP 192.168.1.101 GET ur.iid Feeder1.iid
```

To save settings in the ICD format in EnerVista Online Window:

1. In EnerVista, right-click the device in the Online Window area.
2. Select the **Read ICD File** option. A window opens.
3. Enter a path/name for the file, and click the **Save** button.

To save settings in the ICD format in EnerVista Offline Window:

1. In EnerVista, right-click the device in the Offline Window area.
2. Select the **Create ICD File** option. Or select the **Save As** option, and select the ICD option from drop-down list.

   You can be prompted to specify if the file is for firmware version 7.12 or later.

   The file is saved to the location specified.

To save settings in the CID format in EnerVista Online Window:

1. In EnerVista, right-click the device in the Online Window area.
2. Select the **Read ICD File** option. A window opens.
3. Enter a path/name for the file, and click the **Save** button.

To save settings in the CID format in EnerVista Offline Window:

1. In EnerVista, right-click the device in the Offline Window area.
2. Select the **Save As** option, which displays for firmware 7.3 and later, and select the CID option from the drop-down list.

   The file is copied from the computer to the location specified.

To save list of sites and devices with an Environment backup:

1. In EnerVista, click **File > Environment > Backup**. A window opens.
2. Name and save the .ENV file.

11.7.2 Restore settings

UR device settings can be restored to the values they were at when a URS backup file was created using the EnerVista UR Setup software. When the IEC 61850 option is present, the settings can alternatively be to the values they were at when an IID type backup was created either using the EnerVista UR Setup software in online mode or by using any of the supported file transfer protocols. Note that TFTP cannot be used here, as TFTP "put" mode is disabled for security reasons.

To restore completely, a few settings need to be entered manually either via EnerVista UR Setup or via the UR device front panel. If the restore operation is to be via Ethernet, first the UR device must have its IP address settings entered via the front panel. These are located at **SETTINGS ⇨ PRODUCT SETUP ⇨⇩ COMMUNICATIONS ⇨⇩ NETWORK 1(3)** and **SETTINGS ⇨ PRODUCT SETUP ⇨⇩ COMMUNICATIONS ⇨⇩ IPv4 ROUTE TABLE 1(6) ⇨ DEFAULT IPv4 ROUTE ⇨ GATEWAY ADDRESS**.

When importing a file, it cannot have a blank numeric value. All numeric values must be non-blank, otherwise the file is rejected.

URS and IID procedures are outlined here.

To restore settings from a URS file:

1. In EnerVista, connect to the device in the Online Window area.
2. Right-click the .urs file in the Offline Window area and select **Add Device from File** to locate a file, and/or drag-and-drop the file from the Offline Window area to the device in the Online Window area.

Figure 11-9: Restoring a URS settings file

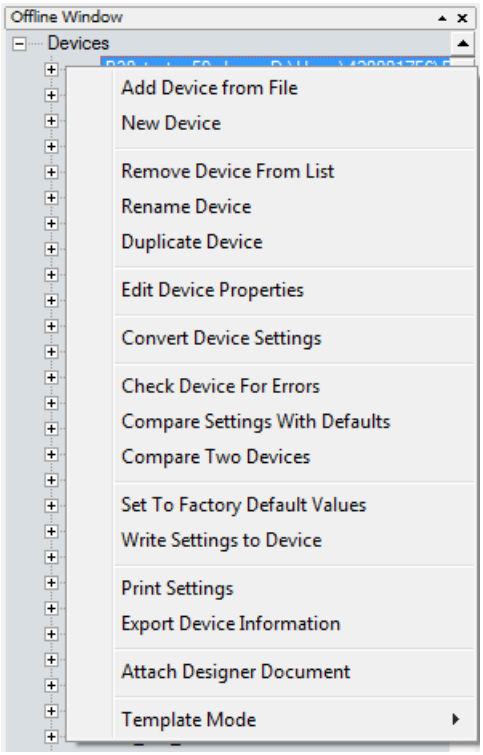

3. Two prompts are possible, first that the URS file does not include the complete IEC 61850 configuration and that it needs to be recreated if you continue. This means that the URS file is from UR version 7.30 or higher, has the IEC 61850 software option in the order code, but any IEC 61850 content will be compromised and will need to be configured.

   Second, a message can display that the URS file is part of a device folder and to use the device's CID file. This means that the URS file is from UR version 7.3 or higher, has the IEC 61850 software option in the order code, and is part of the device folder. The user is trying to add a URS file from inside a device's folder. Instead, the user needs to use the CID file from the device folder.

   These messages display because the roles of the protection engineer and network engineer can be separate. The former can require a URS file, while the latter can require stored Modbus settings and protection schemes.

4. Manually copy the remaining settings, outlined as follows.

To restore settings from an IID file using EnerVista software:

1. In Windows, make a copy of the .iid backup file, and change the extension to .cid on the new copy.
2. In the Online Window area of the UR EnerVista Setup software, connect to the device to establish communication.
3. In the Offline Window area, right-click **Devices** and select **Import Devices from SCD**.

Figure 11-10: Importing an SCD or CID file

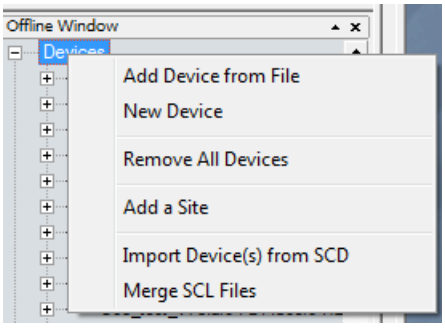

4. Navigate to and select the file with .cid extension. When prompted, enter a file name to give to an intermediate URS file. The URS file is added to the Offline Window area.
5. Drag the imported file in the Offline Window to the device in the Online Window. Note that the **RELAY SETTINGS** value also is written to a device, and the accepting relay is put into "Programmed" or "Not Programmed" mode as configured in the offline file.
6. Manually copy the remaining settings, outlined as follows.

To restore settings from an IID using SFTP:

1. Close EnerVista UR Setup software.
2. In Windows, make a copy of the .iid backup file, and change the extension to .cid on the new copy.
3. On a computer on the same subnetwork as the UR device, open an SFTP client application, such as WinSCP. Note that TFTP cannot be used here.
4. Use the device's IP address as the host name.
5. If the device has the CyberSentry option, use the User Name of "Administrator" or "Engineer," and the password programmed for the selected role. The default password is "ChangeMe1#" (without quotation marks). Log in to the device.
6. If the device does not have the CyberSentry option, use the User Name of "Setting," and the password programmed for the Setting role. The default password is "ChangeMe1#" (without quotation marks). Log in to the device.
7. Upload the backup file copy with the .cid extension. WinSCP uses drag-and-drop or copy-and-paste for this file transfer.
8. Manually copy the remaining settings, outlined as follows.

To manually copy remaining settings:

1. Settings listed in section 4.1.2 Settings Files are not transferred to the UR device with settings files. Enter them manually either via the front panel or via EnerVista UR Setup software. The values that these settings had at the time the backup was created are contained within the backup file, accessed through EnerVista UR Setup software.

To restore the list of sites and devices from an Environment backup:

1. In EnerVista, click **File > Environment > Restore**. A window opens.

2. Select the .ENV file to restore.

11.8 Upgrade software

In general, the latest releases of the EnerVista software can be used with all firmware versions. For example, EnerVista software released for UR 7.4 can be used to access multiple UR devices that have version 7.4x, 7.2x, and 6.0x firmware installed.

Existing installations do not need to be uninstalled before upgrade.

You can also downgrade the software; use the same procedure.

To upgrade the EnerVista software:

1. If a beta version of the EnerVista UR Setup software is installed, uninstall it, for example using the Windows Control Panel.
2. For Windows 10, disconnect any USB cable to the L90, else the UR USB drivers do no install correctly.
3. Download the latest EnerVista software and/or firmware from http://www.gegridsolutions.com/app/ViewFiles.aspx?prod=urfamily&type=7
4. Double-click the file and complete the wizard. The software installs.
5. Access the software and check the version number under **Help > About**. If the new version does not display, try uninstalling the software and reinstalling the new version.
6. For Windows 10, to finish installing the UR USB driver, open **Device Manager > Ports**, then plug in the USB cable (to connect the relay and computer). A new port starting with "GE Virtual Serial Port" is available. If available, click the **OK** button to complete the installation.

   If not available, uninstall the existing GE USB driver in the **Device Manager > Ports**. (Right-click and "Uninstall.")

   When complete, unplug and re-plug the USB cable connecting the UR device. The "GE Virtual Serial Port" driver is now available.

A message can display about a version not being supported. An example is when upgrading from version 7.12K to 7.4x. The 7.12K entry is removed from the Offline Window area.

A message can display in the EnerVista software upon launch that "a device from the environment was not recognized." This means that a device is online and its firmware version conflicts with the software version. In the example shown, a C60 with firmware version 7.5x is online, but the software version is 7.3x. Updating removed incompatible files and changed the device to version 7.3x, after which you need to make the order codes consistent as outlined next.

Figure 11-11: Mismatch in order code between software and device

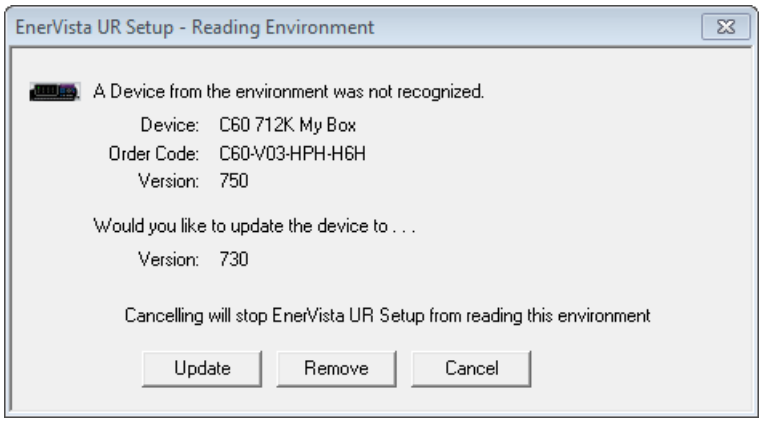

To make the order codes consistent:

1. In EnerVista, click the **Device Setup** button. The window opens.
2. Expand the entry for the UR device.

3. Click the **Read Order Code** button. The order code and version of the device are populated to the software.
4. Click the **OK** button to save the change.

11.9 Upgrade firmware

If upgrading both EnerVista software and L90 firmware, upgrade the software first.

The firmware of the L90 device can be upgraded, locally or remotely, using the EnerVista software.

Upgrades are possible for the same release (such as 7.01 to 7.02) and from one firmware version to another (such as 7.2 to 7.3). When upgrading to another firmware version, check the release notes on the GE Multilin website for compatibility.

If you are upgrading from version 7.0 or 7.1 to 7.2 or later, some CPU modules require a new boot version. Update this first.

Address equipment mismatch error before upgrade. For example, if you have a standard front panel attached and the order code in the device is for a graphical front panel, the upgrade only works with a graphical front panel.

You can also downgrade firmware; use the same procedure.

To upgrade the firmware using EnerVista software:

1. If required, download the boot file and/or firmware from http://www.gegridsolutions.com/app/ViewFiles.aspx?prod=urfamily&type=7
   The boot file is a .000 file. Bootcode files 7.03 and later are for CPUs T, U, V, or W, which have 9T, 9U, 9V, or 9W on the label.
2. Navigate to **Settings > Product Setup > Security** and ensure that the **Remote Setting Authorized** and **Local Setting Authorized** settings are "ON." On the front panel of the device, the path is **SETTINGS ⇨ PRODUCT SETUP ⇨ SECURITY ⇨⇩ DUAL PERMISSION SECURITY ACCESS**.

   If using CyberSentry security, also ensure that the relay and firmware are not locked under the **Settings > Product Setup > Security > Supervisory** settings. A Supervisor role is required for these settings.
3. In EnerVista, back up the device settings by right-clicking the device and selecting **Add Device to Offline Window**. In the window that displays, select an existing file to overwrite, or enter a name for a new settings file and optionally a location for the new file. Click the **Receive** button to start the backup.

   If an "Incompatible device order codes or versions" message displays, it means that you are trying to overwrite a file for another product. You access the **Convert Device Settings** option by right-clicking the file in the **Offline Window** area at the lower left. GE recommends converting settings in firmware steps, for example when converting from 6.0 to 7.4x, convert first to 7.0 then 7.4 in order to follow embedded conversion rules and keep settings. Note that the values of all settings that have been defaulted during conversion are not listed in the conversion report; to find the value of a setting before conversion, inspect the device backups made before conversion.
4. In EnerVista, navigate to **Maintenance > Update Firmware**.

   First select the boot file, if applicable, locating the .000 file, and proceed with the update. Note that settings are not lost during this update. When done, the relay restarts automatically; continue with the next step.

NOTICE When updating the boot file, ensure that power is not lost, else the relay must be returned to the factory for repair.

To update the firmware, select the firmware update by locating the file, and proceed with the update.

When asked if upgrading over the Internet, the difference is the flash memory buffer size each time the software sends data to the relay. Yes means that the flash memory buffer size is 256 bytes. No means that it is 1024 bytes, which is faster.

If a warning message displays about the firmware not being supported by the EnerVista software, it means that the firmware is a later version than the software. Upgrade the software to the same or later version as the firmware, then try again.

If an "Unable to put relay in flash mode" message displays, set the **Settings > Product Setup > Security > Dual Permission Security Access > Remote Setting Authorized** and **Local Setting Authorized** settings to "ON" and try again.

When the update is finished, the relay restarts automatically. The upgrade process takes about 20 minutes when using a graphical front panel because of writing to the front panel.

5. Restart the EnerVista software, and refresh the order code in EnerVista under the **Device Setup** button.
6. Verify the boot and firmware version while the device is starting up or in EnerVista under **Actual Values > Product Info > Firmware Revisions**. The **Revision** is the firmware version, for example, revision 7.40 is UR firmware release 7.40. The **Boot Program Revision** is the bootloader release.
7. Set the device to "programmed" under **Settings > Product Setup > Installation**. A self-test error displays on the device until this is done.
8. If you changed the **Remote Setting Authorized**, the **Local Setting Authorized** settings, or relay lock settings, return them to their previous settings.
9. To apply any previously saved settings, right-click the saved settings file in the **Offline Window** area and select **Write to Device**.

NOTE

The field-programmable gate array (FPGA) can be upgraded under **Maintenance > Update FPGA** when the device is connected via serial cable and the firmware revision is 7.0 or higher.

Modbus addresses assigned to firmware modules, features, settings, and corresponding data items (that is, default values, minimum/maximum values, data type, and item size) can change slightly from version to version of firmware. The addresses are rearranged when new features are added or existing features are enhanced or modified. The EEPROM DATA ERROR message displayed after upgrading/downgrading the firmware is a resettable, self-test message intended to inform users that the Modbus addresses have changed with the upgraded firmware. This message does not signal any problems when appearing after firmware upgrades.

11.10 Replace module

This section outlines how to replace a module.

WARNING **Withdraw or insert a module only when control power has been removed from the unit, and be sure to insert only the correct module type into a slot, else personal injury, damage to the unit or connected equipment, or undesired operation can result.**

NOTICE To avoid damage to the equipment, use proper electrostatic discharge protection (for example, a static strap) when coming in contact with modules while the relay is energized.

The relay, being modular in design, allows for the withdrawal and insertion of modules. Replace modules only with like modules in their original factory configured slots.

To replace a module:

1. Open the enhanced front panel to the left once the thumb screw has been removed. This allows for easy access of the modules for withdrawal. The new wide-angle hinge assembly in the enhanced front panel opens completely and allows easy access to all modules in the L90.

Figure 11-12: Modules inside relay with front cover open (enhanced front panel)

842812A1.CDR

The basic front panel can be opened to the left once the black plastic sliding latch on the right side has been pushed up, as shown below.

Figure 11-13: Removing module (basic front panel)

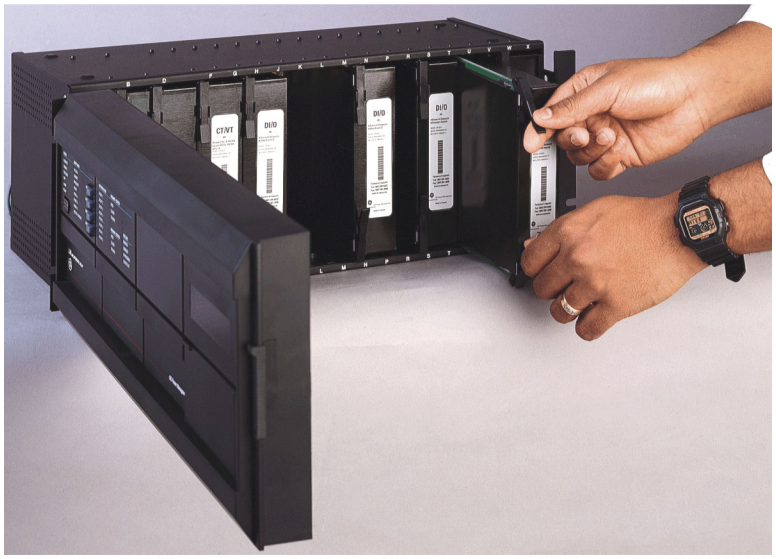

842760A1.CDR

2. With power to the unit off, disconnect individually the connections at the front and back of the module before removing the module from the chassis.

   For any Process Card/process bus module in slot H for use with a HardFiber Brick, also remove the two screws at the back that attach the module to the chassis.

3. To properly remove a module, pull simultaneously the ejector/inserter clips, located at the top and bottom of the module. Record the original location of the module to ensure that the same or replacement module is inserted into the correct slot. While modules with current input provide automatic shorting of external CT circuits, for CT/VT modules it is recommended to short/isolate external circuits accordingly for maximum safety.

4. To properly insert a module, ensure that the correct module type is inserted into the correct slot position. The ejector/inserter clips located at the top and at the bottom of each module must be in the disengaged position as the module is smoothly inserted into the slot. Once the clips have cleared the raised edge of the chassis, engage the clips simultaneously. When the clips have locked into position, the module is fully inserted.

NOTE

When adding a module (versus replacing a module), check that settings have not changed. Depending on the module, settings can reset to default values.

NOTE The new CT/VT modules can only be used with new CPUs; similarly, old CT/VT modules can only be used with old CPUs. In the event that there is a mismatch between the CPU and CT/VT module, the relay does not function and a DSP ERROR or HARDWARE MISMATCH error displays.

11.11 Battery

A battery powers the real time clock on startup of the device.

When required, the battery can be replaced. The battery type is 3 V cylindrical.

The power supply module contains the battery. The power supply modules were upgraded in 2014 to SH/SL from RH/RL, but the order code when purchasing a UR with redundant power supply remained as RH/RL so that customers can continue to use the same order codes. The order code can read RH or RL, while the module inside the unit reads SH or SL. The order code for replacement redundant power supply modules was changed to SH/SL.

11.11.1 Replace battery

When required, the battery can be replaced. The power supply module contains the battery.

CAUTION **To avoid injury, ensure that the unit has been powered off for a minimum of three minutes before replacing the battery.**

Risk of fire if battery is replaced with incorrect type or polarity.

To replace the battery:

1. Turn off the power to the unit.
2. Wait a minimum of three minutes to ensure that there is no power to the battery.
3. As outlined in the previous section, open the unit by sliding up the plastic latch on the right side of the front panel (basic front panel) or unscrewing the panel (enhanced front panel).
4. For the basic front panel, it needs to be removed in order to access the power supply module, which is typically in the first slot on the left side and blocked by the hinge of the front panel. To remove the front panel, unscrew the bracket on the left side of the unit.
5. Remove the power supply module by simultaneously pulling the ejector clips at the top and bottom of the module and sliding it out.
6. Unscrew all four screws (not three) that attach the metal cover to the module. The fourth screw is at the back end of the module, on the opposite side from the clips, beside the white electronics part (see figure).
7. Slide the metal cover away from the clips about 0.5 cm (1/8 inch) and remove the cover.
8. Unclip the black plastic holder that keeps the battery in place. The plastic clips into the socket at the bottom on both sides—pull the plastic away from the battery. Use a flat-head screwdriver if you cannot unclip the plastic with your fingers.
9. Replace the battery with the identical make and model. For example, do not use a rechargeable battery. Observe the + and - polarity of the battery and replace it with the same polarity as marked on the battery holder.

Figure 11-14: Battery location on power supply module

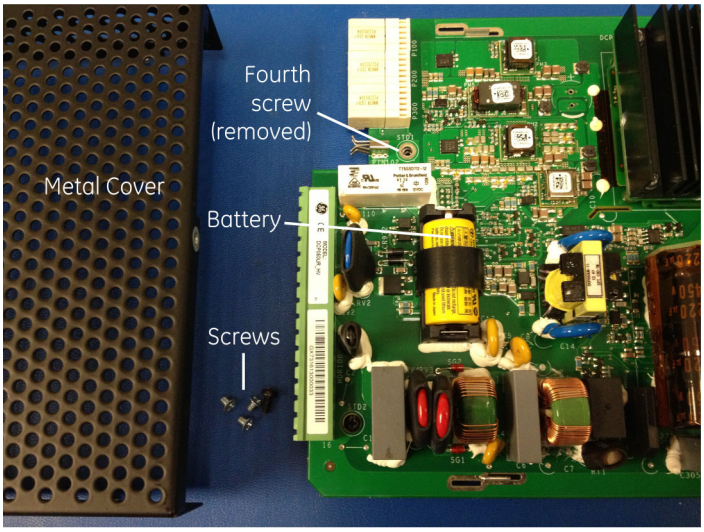

859717A1.cdr

10. Reinstall the battery holder and the metal cover, and reinsert the power supply module into the unit.
11. Power on the unit.
12. Dispose of the old battery as outlined in the next section.

11.11.2 Dispose of battery

11.11.2.1 EN Battery disposal

This product contains a battery that cannot be disposed of as unsorted municipal waste in the European Union. See the product documentation for specific battery information. The battery is marked with this symbol, which may include lettering to indicate cadmium (Cd), lead (Pb), or mercury (Hg). For proper recycling return the battery to your supplier or to a designated collection point. For more information see: www.recyclethis.info.

11.11.2.2 CS Nakládání s bateriemi

Tento produkt obsahuje baterie, které nemohou být zneškodněny v Evropské unii jako netříděný komunální odpadu. Viz dokumentace k produktu pro informace pro konkrétní baterie. Baterie je označena tímto symbolem, který může zahrnovat i uvedena písmena, kadmium (Cd), olovo (Pb), nebo rtuť (Hg). Pro správnou recyklaci baterií vraťte svémudodavateli nebo na určeném sběrném místě. Pro více informací viz: www.recyclethis.info.

11.11.2.3 DA Batteri affald

Dette produkt indeholder et batteri som ikke kan bortskaffes sammen med almindeligt husholdningsaffald i Europa. Se produktinformation for specifikke informationer om batteriet. Batteriet er forsynet med indgraveret symboler for hvad batteriet indeholder: kadmium (Cd), bly (Pb) og kviksølv (Hg). Europæiske brugere af elektrisk udstyr skal aflevere kasserede produkter til genbrug eller til leverandøren. Yderligere oplysninger findes på webstedet www.recyclethis.info.

11.11.2.4 DE Entsorgung von Batterien

Dieses Produkt beinhaltet eine Batterie, die nicht als unsortierter städtischer Abfall in der europäischen Union entsorgt werden darf. Beachten Sie die spezifischen Batterie-informationen in der Produktdokumentation. Die Batterie ist mit diesem Symbol gekennzeichnet, welches auch Hinweise auf möglicherweise enthaltene Stoffe wie Kadmium (Cd), Blei (Pb) oder Quecksilber (Hektogramm) darstellt. Für die korrekte Wiederverwertung bringen Sie diese Batterie zu Ihrem lokalen Lieferanten zurück oder entsorgen Sie das Produkt an den gekennzeichneten Sammelstellen. Weitere Informationen hierzu finden Sie auf der folgenden Website: www.recyclethis.info.

11.11.2.5 EL Απόρριψη μπαταριών

Αυτό το προϊόν περιέχει μια μπαταρία που δεν πρέπει να απορρίπτεται σε δημόσια συστήματα απόρριψης στην Ευρωπαϊκή Κοινότητα. Δείτε την τεκμηρίωση του προϊόντος για συγκεκριμένες πληροφορίες που αφορούν τη μπαταρία. Η μπαταρία είναι φέρει σήμανση με αυτό το σύμβολο, το οποίο μπορεί να περιλαμβάνει γράμματα για να δηλώσουν το κάδμιο (Cd), τον μόλυβδο (Pb), ή τον υδράργυρο (Hg). Για την κατάλληλη ανακύκλωση επιστρέψτε την μπαταρία στον προμηθευτή σας ή σε καθορισμένο σημείο συλλογής. Για περισσότερες πληροφορίες δείτε: www.recyclethis.info.

11.11.2.6 ES Eliminacion de baterias

Este producto contiene una batería que no se pueda eliminar como basura normal sin clasificar en la Unión Europea. Examine la documentación del producto para la información específica de la batería. La batería se marca con este símbolo, que puede incluir siglas para indicar el cadmio (Cd), el plomo (Pb), o el mercurio (Hg). Para el reciclaje apropiado, devuelva este producto a su distribuidor ó deshágase de él en los puntos de reciclaje designados. Para mas información : wwwrecyclethis.info.

11.11.2.7 ET Patareide kõrvaldamine

Käesolev toode sisaldab patareisid, mida Euroopa Liidus ei tohi kõrvaldada sorteerimata olmejäätmetena. Andmeid patareide kohta vaadake toote dokumentatsioonist. Patareid on märgistatud käesoleva sümboliga, millel võib olla kaadmiumi (Cd), pliid (Pb) või elavhõbedat (Hg) tähistavad tähed. Nõuetekohaseks ringlusse võtmiseks tagastage patarei tarnijale või kindlaksmääratud vastuvõtupunkti. Lisainformatsiooni saab Internetist aadressil: www.recyclethis.info.

11.11.2.8 FI Paristoje ja akkujen hävittäminen

Tuote sisältää pariston, jota ei saa hävittää Euroopan Unionin alueella talousjätteen mukana. Tarkista tuoteselosteesta tuotteen tiedot. Paristo on merkitty tällä symbolilla ja saattaa sisältää cadmiumia (Cd), lyijyä (Pb) tai elohopeaa (Hg). Oikean kierrätystavan varmistamiseksi palauta tuote paikalliselle jälleenmyyjälle tai palauta se paristojen keräyspisteeseen. Lisätietoja sivuilla www.recyclethis.info.

11.11.2.9 FR Élimination des piles

Ce produit contient une batterie qui ne peuvent être éliminés comme déchets municipaux non triés dans l'Union européenne. Voir la documentation du produit au niveau des renseignements sur la pile. La batterie est marqué de ce symbole, qui comprennent les indications cadmium (Cd), plomb (Pb), ou mercure (Hg). Pour le recyclage, retourner la batterie à votre fournisseur ou à un point de collecte. Pour plus d'informations, voir: www.recyclethis.info.

11.11.2.10 HU Akkumulátor hulladék kezelése

Ezen termék akkumulátort tartalmaz, amely az Európai Unión belül csak a kijelölt módon és helyen dobható ki. A terméken illetve a mellékelt ismertetőn olvasható a kadmium (Cd), ólom (Pb) vagy higany (Hg) tartalomra utaló betűjelzés. A hulladék akkumulátor leadható a termék forgalmazójánál új akkumulátor vásárlásakor, vagy a kijelölt elektronikai hulladékudvarokban. További információ a www.recyclethis.info oldalon.

11.11.2.11 IT Smaltimento batterie

Questo prodotto contiene una batteria che non può essere smaltita nei comuni contenitori per lo smaltimento rifiuti, nell' Unione Europea. Controllate la documentazione del prodotto per le informazioni specifiche sulla batteria. La batteria è contrassegnata con questo simbolo e può includere alcuni caratteri ad indicare la presenza di cadmio (Cd), piombo (Pb) oppure mercurio (Hg). Per il corretto smaltimento, potete restituirli al vostro fornitore locale, oppure rivolgervi e consegnarli presso i centri di raccolta preposti. Per maggiori informazioni vedere: ww.recyclethis.info.

11.11.2.12 LT Baterijų šalinimas

Šios įrangos sudėtyje yra baterijų, kurias draudžiama šalinti Europos Sąjungos viešose nerūšiuotų atliekų šalinimo sistemose. Informaciją apie baterijas galite rasti įrangos techninėje dokumentacijoje. Baterijos žymimos šiuo simboliu, papildomai gali būti nurodoma kad baterijų sudėtyje yra kadmio (Cd), švino (Pb) ar gyvsidabrio (Hg). Eksploatavimui nebetinkamas baterijas pristatykite į tam skirtas surinkimo vietas arba grąžinkite jas tiesioginiam tiekėjui, kad jos būtų tinkamai utilizuotos. Daugiau informacijos rasite šioje interneto svetainėje: www.recyclethis.info.

11.11.2.13 LV Bateriju likvidēšana

Šis produkts satur bateriju vai akumulatoru, kuru nedrīkst izmest Eiropas Savienībā esošajās sadzīves atkritumu sistēmās. Sk. produkta dokumentācijā, kur ir norādīta konkrēta informācija par bateriju vai akumulatoru. Baterijas vai akumulatora marķējumā ir šis simbols, kas var ietvert burtus, kuri norāda kadmiju (Cd), svinu (Pb) vai dzīvsudrabu (Hg). Pēc ekspluatācijas laika beigām baterijas vai akumulatori jānodod piegādātājam vai specializētā bateriju savākšanas vietā. Sīkāku informāciju var iegūt vietnē: www.recyclethis.info.

11.11.2.14 NL Verwijderen van baterijen

Dit product bevat een batterij welke niet kan verwijdert worden via de gemeentelijke huisvuilscheiding in de Europese Gemeenschap. Gelieve de product documentatie te controleren voor specifieke batterij informatie. De batterijen met deze label kunnen volgende indictaies bevatten cadium (Cd), lood (Pb) of kwik (Hg). Voor correcte vorm van kringloop, geef je de producten terug aan jou locale leverancier of geef het af aan een gespecialiseerde verzamelpunt. Meer informatie vindt u op de volgende website: www.recyclethis.info.

11.11.2.15 NO Retur av batteri

Dette produkt inneholder et batteri som ikke kan kastes med usortert kommunalt søppel i den Europeiske Unionen. Se produktdokumentasjonen for spesifikk batteriinformasjon. Batteriet er merket med dette symbolet som kan inkludere symboler for å indikere at kadmium (Cd), bly (Pb), eller kvikksølv (Hg) forekommer. Returner batteriet til leverandøren din eller til et dedikert oppsamlingspunkt for korrekt gjenvinning. For mer informasjon se: www.recyclethis.info.

11.11.2.16 PL Pozbywanie się zużytych baterii

Ten produkt zawiera baterie, które w Unii Europejskiej mogą być usuwane tylko jako posegregowane odpady komunalne. Dokładne informacje dotyczące użytych baterii znajdują się w dokumentacji produktu. Baterie oznaczone tym symbolem mogą zawierać dodatkowe oznaczenia literowe wskazujące na zawartość kadmu (Cd), ołowiu (Pb) lub rtęci (Hg). Dla zapewnienia właściwej utylizacji, należy zwrócić baterie do dostawcy albo do wyznaczonego punktu zbiórki. Więcej informacji można znaleźć na stronie internetowej www.recyclethis.info.

11.11.2.17 PT Eliminação de Baterias

Este produto contêm uma bateria que não pode ser considerado lixo municipal na União Europeia. Consulte a documentação do produto para obter informação específica da bateria. A bateria é identificada por meio de este símbolo, que pode incluir a rotulação para indicar o cádmio (Cd), chumbo (Pb), ou o mercúrio (hg). Para uma reciclagem apropriada envie a bateria para o seu fornecedor ou para um ponto de recolha designado. Para mais informação veja: www.recyclethis.info.

11.11.2.18 RU Утилизация батарей

Согласно европейской директиве об отходах электрического и электронного оборудования, продукты, содержащие батареи, нельзя утилизировать как обычные отходы на территории ЕС. Более подробную информацию вы найдете в документации к продукту. На этом символе могут присутствовать буквы, которые означают, что батарея содержит кадмий (Cd), свинец (Pb) или ртуть (Hg). Для надлежащей утилизации по окончании срока эксплуатации пользователь должен возвратить батареи локальному поставщику или сдать в специальный пункт приема. Подробности можно найти на веб-сайте: www.recyclethis.info.

11.11.2.19 SK Zaobchádzanie s batériami

Tento produkt obsahuje batériu, s ktorou sa v Európskej únii nesmie nakladať ako s netriedeným komunálnym odpadom. Dokumentácia k produktu obsahuje špecifické informácie o batérii. Batéria je označená týmto symbolom, ktorý môže obsahovať písmená na označenie kadmia (Cd), olova (Pb), alebo ortuti (Hg). Na správnu recykláciu vráťte batériu vášmu lokálnemu dodávateľovi alebo na určené zberné miesto. Pre viac informácii pozrite: www.recyclethis.info.

11.11.2.20 SL Odlaganje baterij

Ta izdelek vsebuje baterijo, ki je v Evropski uniji ni dovoljeno odstranjevati kot nesortiran komunalni odpadek. Za posebne informacije o bateriji glejte dokumentacijo izdelka. Baterija je označena s tem simbolom, ki lahko vključuje napise, ki označujejo kadmij (Cd), svinec (Pb) ali živo srebro (Hg). Za ustrezno recikliranje baterijo vrnite dobavitelju ali jo odstranite na določenem zbirališču. Za več informacij obiščite spletno stran: www.recyclethis.info.

11.11.2.21 SV Kassering av batteri

Denna produkt innehåller ett batteri som inte får kastas i allmänna sophanteringssytem inom den europeiska unionen. Se produktdokumentationen för specifik batteriinformation. Batteriet är märkt med denna symbol, vilket kan innebära att det innehåller kadmium (Cd), bly (Pb) eller kvicksilver (Hg). För korrekt återvinning skall batteriet returneras till leverantören eller till en därför avsedd deponering. För mer information, se: www.recyclethis.info.

11.11.2.22 TR Pil Geri Dönüşümü

Bu ürün Avrupa Birliği genel atık sistemlerine atılmaması gereken pil içermektedir. Daha detaylı pil bilgisi için ürünün kataloğunu inceleyiniz. Bu sembolle işaretlenmiş piller Kadmiyum(Cd), Kurşun(Pb) ya da Civa(Hg) içerebilir. Doğru geri dönüşüm için ürünü yerel tedarikçinize geri veriniz ya da özel işaretlenmiş toplama noktlarına atınız. Daha fazla bilgi için: www.recyclethis.info.

11.11.2.23 Global contacts

North America	905-294-6222
Latin America	+55 11 3614 1700
Europe, Middle East, Africa	+(34) 94 485 88 00
Asia	+86-21-2401-3208
India	+91 80 41314617

From GE Part Number 1604-0021-A1, GE Publication Number GEK-113574.

11.12 Clear files and data after uninstall

The unit can be decommissioned by turning off power to the unit and disconnecting the wires to it.

To clear files and settings in the UR:

1. On the UR front panel, navigate to **COMMANDS ⇨⇩ RELAY MAINTENANCE ⇨⇩ SERVICE COMMAND**, enter the value 20511, and press the **ENTER** key. The relay restarts and clears the UR.
2. Clear the flash memory using the **SETTINGS ⇨ PRODUCT SETUP ⇨⇩ CLEAR RELAY RECORDS** command.

To clear files and settings on the computer:

1. Uninstall the EnerVista UR Setup software.
2. Find and delete the following UR files:
   - .URS, .CID, and .ICD settings
   - .EVT event records
   - .CFG and .DAT COMTRADE

11.13 Repairs

The battery and modules inside the case can be replaced without return of the device to the factory. The firmware and software can be upgraded without return of the device to the factory.

Fuses in the power supply module are not field-replaceable.

Files can be requested for use by technical support staff, for example the Service Report (click the icon in the software or connect a USB drive to the graphical front panel) or under **Maintenance > Retrieve File**, as outlined elsewhere in this document.

For issues not solved by troubleshooting, the process to return the device to the factory for repair is as follows:

- Contact a GE Grid Solutions Technical Support Center. Contact information is found in the first chapter.
- Obtain a Return Materials Authorization (RMA) number from the Technical Support Center.
- Verify that the RMA and Commercial Invoice received have the correct information.
- Tightly pack the unit in a box with bubble wrap, foam material, or styrofoam inserts or packaging peanuts to cushion the item(s). You may also use double boxing whereby you place the box in a larger box that contains at least 5 cm of cushioning material.
- Ship the unit by courier or freight forwarder, along with the Commercial Invoice and RMA, to the factory.

  GE GRID SOLUTIONS
  650 MARKLAND STREET
  MARKHAM, ONTARIO
  CANADA L6C 0M1
  ATTN: SERVICE DEPT.
  RMA# : _____

  Customers are responsible for shipping costs to the factory, regardless of whether the unit is under warranty.
- Fax a copy of the shipping information to the GE Grid Solutions service department in Canada at +1 905 927 5098.

Use the detailed return procedure outlined at

https://www.gegridsolutions.com/multilin/support/ret_proc.htm

The current warranty and return information are outlined at

https://www.gegridsolutions.com/multilin/warranty.htm

11.14 Storage

Store the unit indoors in a cool, dry place. If possible, store in the original packaging. Follow the storage temperature range outlined in the Specifications.

NOTICE To avoid deterioration of electrolytic capacitors, power up units that are stored in a de-energized state once per year, for one hour continuously.

11.15 Disposal

Other than the battery, there are no special requirements for disposal of the unit at the end its service life. For customers located in the European Union, dispose of the battery as outlined earlier. To prevent non-intended use of the unit, remove the modules as outlined earlier, dismantle the unit, and recycle the metal when possible. See the UR Family Recycling and Disposal Instructions (GET-20096).

L90 Line Current Differential System

Appendix A: FlexAnalog operands

This appendix outlines FlexAnalog parameters.

A.1 FlexAnalog items

A FlexAnalog parameter is an analog parameter.

FlexAnalog items are also viewable in a web browser. Enter the IP address of the UR, access the **Device Information Menu** option, then the **FlexAnalog Parameter Listing** option. Entries displayed online depend on order code.

Table A-1: FlexAnalog data items

Decimal address	FlexAnalog name	Units	Description
5688	Channel 1 Asymmetry	ms	Channel 1 asymmetry
5690	Channel 2 Asymmetry	ms	Channel 2 asymmetry
5760	Sns Dir Power 1	Watts	Sensitive directional power 1 actual value
5762	Sns Dir Power 2	Watts	Sensitive directional power 2 actual value
5792	RGF 1 Igd Mag	Amps	Restricted ground fault 1 differential ground current magnitude
5794	RGF 1 Igr Mag	Amps	Restricted ground fault 1 restricted ground current magnitude
5796	RGF 2 Igd Mag	Amps	Restricted ground fault 2 differential ground current magnitude
5798	RGF 2 Igr Mag	Amps	Restricted ground fault 2 restricted ground current magnitude
5800	RGF 3 Igd Mag	Amps	Restricted ground fault 3 differential ground current magnitude
5802	RGF 3 Igr Mag	Amps	Restricted ground fault 3 restricted ground current magnitude
5804	RGF 4 Igd Mag	Amps	Restricted ground fault 4 differential ground current magnitude
5806	RGF 4 Igr Mag	Amps	Restricted ground fault 4 restricted ground current magnitude
5824	Field RTD 1 Value	---	Field RTD 1 value
5825	Field RTD 2 Value	---	Field RTD 2 value
5826	Field RTD 3 Value	---	Field RTD 3 value
5827	Field RTD 4 Value	---	Field RTD 4 value
5828	Field RTD 5 Value	---	Field RTD 5 value
5829	Field RTD 6 Value	---	Field RTD 6 value
5830	Field RTD 7 Value	---	Field RTD 7 value
5831	Field RTD 8 Value	---	Field RTD 8 value

A

Decimal address	FlexAnalog name	Units	Description
5832	Field TDR 1 Value	---	Field TDR 1 value
5834	Field TDR 2 Value	---	Field TDR 2 value
5836	Field TDR 3 Value	---	Field TDR 3 value
5838	Field TDR 4 Value	---	Field TDR 4 value
5840	Field TDR 5 Value	---	Field TDR 5 value
5842	Field TDR 6 Value	---	Field TDR 6 value
5844	Field TDR 7 Value	---	Field TDR 7 value
5846	Field TDR 8 Value	---	Field TDR 8 value
5856	Freq Rate 1 Value	Hz/s	Frequency rate of change 1 actual value
5860	Freq Rate 2 Value	Hz/s	Frequency rate of change 2 actual value
5864	Freq Rate 3 Value	Hz/s	Frequency rate of change 3 actual value
5868	Freq Rate 4 Value	Hz/s	Frequency rate of change 4 actual value
6144	SRC 1 Ia RMS	Amps	Source 1 phase A current RMS
6146	SRC 1 Ib RMS	Amps	Source 1 phase B current RMS
6148	SRC 1 Ic RMS	Amps	Source 1 phase C current RMS
6150	SRC 1 In RMS	Amps	Source 1 neutral current RMS
6152	SRC 1 Ia Mag	Amps	Source 1 phase A current magnitude
6154	SRC 1 Ia Angle	Degrees	Source 1 phase A current angle
6155	SRC 1 Ib Mag	Amps	Source 1 phase B current magnitude
6157	SRC 1 Ib Angle	Degrees	Source 1 phase B current angle
6158	SRC 1 Ic Mag	Amps	Source 1 phase C current magnitude
6160	SRC 1 Ic Angle	Degrees	Source 1 phase C current angle
6161	SRC 1 In Mag	Amps	Source 1 neutral current magnitude
6163	SRC 1 In Angle	Degrees	Source 1 neutral current angle
6164	SRC 1 Ig RMS	Amps	Source 1 ground current RMS
6166	SRC 1 Ig Mag	Amps	Source 1 ground current magnitude
6168	SRC 1 Ig Angle	Degrees	Source 1 ground current angle
6169	SRC 1 I_0 Mag	Amps	Source 1 zero-sequence current magnitude
6171	SRC 1 I_0 Angle	Degrees	Source 1 zero-sequence current angle
6172	SRC 1 I_1 Mag	Amps	Source 1 positive-sequence current magnitude
6174	SRC 1 I_1 Angle	Degrees	Source 1 positive-sequence current angle
6175	SRC 1 I_2 Mag	Amps	Source 1 negative-sequence current magnitude
6177	SRC 1 I_2 Angle	Degrees	Source 1 negative-sequence current angle
6178	SRC 1 Igd Mag	Amps	Source 1 differential ground current magnitude
6180	SRC 1 Igd Angle	Degrees	Source 1 differential ground current angle
6208	SRC 2 Ia RMS	Amps	Source 2 phase A current RMS
6210	SRC 2 Ib RMS	Amps	Source 2 phase B current RMS
6212	SRC 2 Ic RMS	Amps	Source 2 phase C current RMS
6214	SRC 2 In RMS	Amps	Source 2 neutral current RMS
6216	SRC 2 Ia Mag	Amps	Source 2 phase A current magnitude
6218	SRC 2 Ia Angle	Degrees	Source 2 phase A current angle
6219	SRC 2 Ib Mag	Amps	Source 2 phase B current magnitude
6221	SRC 2 Ib Angle	Degrees	Source 2 phase B current angle
6222	SRC 2 Ic Mag	Amps	Source 2 phase C current magnitude
6224	SRC 2 Ic Angle	Degrees	Source 2 phase C current angle
6225	SRC 2 In Mag	Amps	Source 2 neutral current magnitude

Decimal address	FlexAnalog name	Units	Description
6227	SRC 2 In Angle	Degrees	Source 2 neutral current angle
6228	SRC 2 Ig RMS	Amps	Source 2 ground current RMS
6230	SRC 2 Ig Mag	Amps	Source 2 ground current magnitude
6232	SRC 2 Ig Angle	Degrees	Source 2 ground current angle
6233	SRC 2 I_0 Mag	Amps	Source 2 zero-sequence current magnitude
6235	SRC 2 I_0 Angle	Degrees	Source 2 zero-sequence current angle
6236	SRC 2 I_1 Mag	Amps	Source 2 positive-sequence current magnitude
6238	SRC 2 I_1 Angle	Degrees	Source 2 positive-sequence current angle
6239	SRC 2 I_2 Mag	Amps	Source 2 negative-sequence current magnitude
6241	SRC 2 I_2 Angle	Degrees	Source 2 negative-sequence current angle
6242	SRC 2 Igd Mag	Amps	Source 2 differential ground current magnitude
6244	SRC 2 Igd Angle	Degrees	Source 2 differential ground current angle
6272	SRC 3 Ia RMS	Amps	Source 3 phase A current RMS
6274	SRC 3 Ib RMS	Amps	Source 3 phase B current RMS
6276	SRC 3 Ic RMS	Amps	Source 3 phase C current RMS
6278	SRC 3 In RMS	Amps	Source 3 neutral current RMS
6280	SRC 3 Ia Mag	Amps	Source 3 phase A current magnitude
6282	SRC 3 Ia Angle	Degrees	Source 3 phase A current angle
6283	SRC 3 Ib Mag	Amps	Source 3 phase B current magnitude
6285	SRC 3 Ib Angle	Degrees	Source 3 phase B current angle
6286	SRC 3 Ic Mag	Amps	Source 3 phase C current magnitude
6288	SRC 3 Ic Angle	Degrees	Source 3 phase C current angle
6289	SRC 3 In Mag	Amps	Source 3 neutral current magnitude
6291	SRC 3 In Angle	Degrees	Source 3 neutral current angle
6292	SRC 3 Ig RMS	Amps	Source 3 ground current RMS
6294	SRC 3 Ig Mag	Amps	Source 3 ground current magnitude
6296	SRC 3 Ig Angle	Degrees	Source 3 ground current angle
6297	SRC 3 I_0 Mag	Amps	Source 3 zero-sequence current magnitude
6299	SRC 3 I_0 Angle	Degrees	Source 3 zero-sequence current angle
6300	SRC 3 I_1 Mag	Amps	Source 3 positive-sequence current magnitude
6302	SRC 3 I_1 Angle	Degrees	Source 3 positive-sequence current angle
6303	SRC 3 I_2 Mag	Amps	Source 3 negative-sequence current magnitude
6305	SRC 3 I_2 Angle	Degrees	Source 3 negative-sequence current angle
6306	SRC 3 Igd Mag	Amps	Source 3 differential ground current magnitude
6308	SRC 3 Igd Angle	Degrees	Source 3 differential ground current angle
6336	SRC 4 Ia RMS	Amps	Source 4 phase A current RMS
6338	SRC 4 Ib RMS	Amps	Source 4 phase B current RMS
6340	SRC 4 Ic RMS	Amps	Source 4 phase C current RMS
6342	SRC 4 In RMS	Amps	Source 4 neutral current RMS
6344	SRC 4 Ia Mag	Amps	Source 4 phase A current magnitude
6346	SRC 4 Ia Angle	Degrees	Source 4 phase A current angle
6347	SRC 4 Ib Mag	Amps	Source 4 phase B current magnitude
6349	SRC 4 Ib Angle	Degrees	Source 4 phase B current angle
6350	SRC 4 Ic Mag	Amps	Source 4 phase C current magnitude
6352	SRC 4 Ic Angle	Degrees	Source 4 phase C current angle
6353	SRC 4 In Mag	Amps	Source 4 neutral current magnitude

A

Decimal address	FlexAnalog name	Units	Description
6355	SRC 4 In Angle	Degrees	Source 4 neutral current angle
6356	SRC 4 Ig RMS	Amps	Source 4 ground current RMS
6358	SRC 4 Ig Mag	Amps	Source 4 ground current magnitude
6360	SRC 4 Ig Angle	Degrees	Source 4 ground current angle
6361	SRC 4 I_0 Mag	Amps	Source 4 zero-sequence current magnitude
6363	SRC 4 I_0 Angle	Degrees	Source 4 zero-sequence current angle
6364	SRC 4 I_1 Mag	Amps	Source 4 positive-sequence current magnitude
6366	SRC 4 I_1 Angle	Degrees	Source 4 positive-sequence current angle
6367	SRC 4 I_2 Mag	Amps	Source 4 negative-sequence current magnitude
6369	SRC 4 I_2 Angle	Degrees	Source 4 negative-sequence current angle
6370	SRC 4 Igd Mag	Amps	Source 4 differential ground current magnitude
6372	SRC 4 Igd Angle	Degrees	Source 4 differential ground current angle
6656	SRC 1 Vag RMS	Volts	Source 1 phase AG voltage RMS
6658	SRC 1 Vbg RMS	Volts	Source 1 phase BG voltage RMS
6660	SRC 1 Vcg RMS	Volts	Source 1 phase CG voltage RMS
6662	SRC 1 Vag Mag	Volts	Source 1 phase AG voltage magnitude
6664	SRC 1 Vag Angle	Degrees	Source 1 phase AG voltage angle
6665	SRC 1 Vbg Mag	Volts	Source 1 phase BG voltage magnitude
6667	SRC 1 Vbg Angle	Degrees	Source 1 phase BG voltage angle
6668	SRC 1 Vcg Mag	Volts	Source 1 phase CG voltage magnitude
6670	SRC 1 Vcg Angle	Degrees	Source 1 phase CG voltage angle
6671	SRC 1 Vab RMS	Volts	Source 1 phase AB voltage RMS
6673	SRC 1 Vbc RMS	Volts	Source 1 phase BC voltage RMS
6675	SRC 1 Vca RMS	Volts	Source 1 phase CA voltage RMS
6677	SRC 1 Vab Mag	Volts	Source 1 phase AB voltage magnitude
6679	SRC 1 Vab Angle	Degrees	Source 1 phase AB voltage angle
6680	SRC 1 Vbc Mag	Volts	Source 1 phase BC voltage magnitude
6682	SRC 1 Vbc Angle	Degrees	Source 1 phase BC voltage angle
6683	SRC 1 Vca Mag	Volts	Source 1 phase CA voltage magnitude
6685	SRC 1 Vca Angle	Degrees	Source 1 phase CA voltage angle
6686	SRC 1 Vx RMS	Volts	Source 1 auxiliary voltage RMS
6688	SRC 1 Vx Mag	Volts	Source 1 auxiliary voltage magnitude
6690	SRC 1 Vx Angle	Degrees	Source 1 auxiliary voltage angle
6691	SRC 1 V_0 Mag	Volts	Source 1 zero-sequence voltage magnitude
6693	SRC 1 V_0 Angle	Degrees	Source 1 zero-sequence voltage angle
6694	SRC 1 V_1 Mag	Volts	Source 1 positive-sequence voltage magnitude
6696	SRC 1 V_1 Angle	Degrees	Source 1 positive-sequence voltage angle
6697	SRC 1 V_2 Mag	Volts	Source 1 negative-sequence voltage magnitude
6699	SRC 1 V_2 Angle	Degrees	Source 1 negative-sequence voltage angle
6720	SRC 2 Vag RMS	Volts	Source 2 phase AG voltage RMS
6722	SRC 2 Vbg RMS	Volts	Source 2 phase BG voltage RMS
6724	SRC 2 Vcg RMS	Volts	Source 2 phase CG voltage RMS
6726	SRC 2 Vag Mag	Volts	Source 2 phase AG voltage magnitude
6728	SRC 2 Vag Angle	Degrees	Source 2 phase AG voltage angle
6729	SRC 2 Vbg Mag	Volts	Source 2 phase BG voltage magnitude
6731	SRC 2 Vbg Angle	Degrees	Source 2 phase BG voltage angle

A

Decimal address	FlexAnalog name	Units	Description
6732	SRC 2 Vcg Mag	Volts	Source 2 phase CG voltage magnitude
6734	SRC 2 Vcg Angle	Degrees	Source 2 phase CG voltage angle
6735	SRC 2 Vab RMS	Volts	Source 2 phase AB voltage RMS
6737	SRC 2 Vbc RMS	Volts	Source 2 phase BC voltage RMS
6739	SRC 2 Vca RMS	Volts	Source 2 phase CA voltage RMS
6741	SRC 2 Vab Mag	Volts	Source 2 phase AB voltage magnitude
6743	SRC 2 Vab Angle	Degrees	Source 2 phase AB voltage angle
6744	SRC 2 Vbc Mag	Volts	Source 2 phase BC voltage magnitude
6746	SRC 2 Vbc Angle	Degrees	Source 2 phase BC voltage angle
6747	SRC 2 Vca Mag	Volts	Source 2 phase CA voltage magnitude
6749	SRC 2 Vca Angle	Degrees	Source 2 phase CA voltage angle
6750	SRC 2 Vx RMS	Volts	Source 2 auxiliary voltage RMS
6752	SRC 2 Vx Mag	Volts	Source 2 auxiliary voltage magnitude
6754	SRC 2 Vx Angle	Degrees	Source 2 auxiliary voltage angle
6755	SRC 2 V_0 Mag	Volts	Source 2 zero-sequence voltage magnitude
6757	SRC 2 V_0 Angle	Degrees	Source 2 zero-sequence voltage angle
6758	SRC 2 V_1 Mag	Volts	Source 2 positive-sequence voltage magnitude
6760	SRC 2 V_1 Angle	Degrees	Source 2 positive-sequence voltage angle
6761	SRC 2 V_2 Mag	Volts	Source 2 negative-sequence voltage magnitude
6763	SRC 2 V_2 Angle	Degrees	Source 2 negative-sequence voltage angle
6784	SRC 3 Vag RMS	Volts	Source 3 phase AG voltage RMS
6786	SRC 3 Vbg RMS	Volts	Source 3 phase BG voltage RMS
6788	SRC 3 Vcg RMS	Volts	Source 3 phase CG voltage RMS
6790	SRC 3 Vag Mag	Volts	Source 3 phase AG voltage magnitude
6792	SRC 3 Vag Angle	Degrees	Source 3 phase AG voltage angle
6793	SRC 3 Vbg Mag	Volts	Source 3 phase BG voltage magnitude
6795	SRC 3 Vbg Angle	Degrees	Source 3 phase BG voltage angle
6796	SRC 3 Vcg Mag	Volts	Source 3 phase CG voltage magnitude
6798	SRC 3 Vcg Angle	Degrees	Source 3 phase CG voltage angle
6799	SRC 3 Vab RMS	Volts	Source 3 phase AB voltage RMS
6801	SRC 3 Vbc RMS	Volts	Source 3 phase BC voltage RMS
6803	SRC 3 Vca RMS	Volts	Source 3 phase CA voltage RMS
6805	SRC 3 Vab Mag	Volts	Source 3 phase AB voltage magnitude
6807	SRC 3 Vab Angle	Degrees	Source 3 phase AB voltage angle
6808	SRC 3 Vbc Mag	Volts	Source 3 phase BC voltage magnitude
6810	SRC 3 Vbc Angle	Degrees	Source 3 phase BC voltage angle
6811	SRC 3 Vca Mag	Volts	Source 3 phase CA voltage magnitude
6813	SRC 3 Vca Angle	Degrees	Source 3 phase CA voltage angle
6814	SRC 3 Vx RMS	Volts	Source 3 auxiliary voltage RMS
6816	SRC 3 Vx Mag	Volts	Source 3 auxiliary voltage magnitude
6818	SRC 3 Vx Angle	Degrees	Source 3 auxiliary voltage angle
6819	SRC 3 V_0 Mag	Volts	Source 3 zero-sequence voltage magnitude
6821	SRC 3 V_0 Angle	Degrees	Source 3 zero-sequence voltage angle
6822	SRC 3 V_1 Mag	Volts	Source 3 positive-sequence voltage magnitude
6824	SRC 3 V_1 Angle	Degrees	Source 3 positive-sequence voltage angle
6825	SRC 3 V_2 Mag	Volts	Source 3 negative-sequence voltage magnitude

A

Decimal address	FlexAnalog name	Units	Description
6827	SRC 3 V_2 Angle	Degrees	Source 3 negative-sequence voltage angle
6848	SRC 4 Vag RMS	Volts	Source 4 phase AG voltage RMS
6850	SRC 4 Vbg RMS	Volts	Source 4 phase BG voltage RMS
6852	SRC 4 Vcg RMS	Volts	Source 4 phase CG voltage RMS
6854	SRC 4 Vag Mag	Volts	Source 4 phase AG voltage magnitude
6856	SRC 4 Vag Angle	Degrees	Source 4 phase AG voltage angle
6857	SRC 4 Vbg Mag	Volts	Source 4 phase BG voltage magnitude
6859	SRC 4 Vbg Angle	Degrees	Source 4 phase BG voltage angle
6860	SRC 4 Vcg Mag	Volts	Source 4 phase CG voltage magnitude
6862	SRC 4 Vcg Angle	Degrees	Source 4 phase CG voltage angle
6863	SRC 4 Vab RMS	Volts	Source 4 phase AB voltage RMS
6865	SRC 4 Vbc RMS	Volts	Source 4 phase BC voltage RMS
6867	SRC 4 Vca RMS	Volts	Source 4 phase CA voltage RMS
6869	SRC 4 Vab Mag	Volts	Source 4 phase AB voltage magnitude
6871	SRC 4 Vab Angle	Degrees	Source 4 phase AB voltage angle
6872	SRC 4 Vbc Mag	Volts	Source 4 phase BC voltage magnitude
6874	SRC 4 Vbc Angle	Degrees	Source 4 phase BC voltage angle
6875	SRC 4 Vca Mag	Volts	Source 4 phase CA voltage magnitude
6877	SRC 4 Vca Angle	Degrees	Source 4 phase CA voltage angle
6878	SRC 4 Vx RMS	Volts	Source 4 auxiliary voltage RMS
6880	SRC 4 Vx Mag	Volts	Source 4 auxiliary voltage magnitude
6882	SRC 4 Vx Angle	Degrees	Source 4 auxiliary voltage angle
6883	SRC 4 V_0 Mag	Volts	Source 4 zero-sequence voltage magnitude
6885	SRC 4 V_0 Angle	Degrees	Source 4 zero-sequence voltage angle
6886	SRC 4 V_1 Mag	Volts	Source 4 positive-sequence voltage magnitude
6888	SRC 4 V_1 Angle	Degrees	Source 4 positive-sequence voltage angle
6889	SRC 4 V_2 Mag	Volts	Source 4 negative-sequence voltage magnitude
6891	SRC 4 V_2 Angle	Degrees	Source 4 negative-sequence voltage angle
7168	SRC 1 P	Watts	Source 1 three-phase real power
7170	SRC 1 Pa	Watts	Source 1 phase A real power
7172	SRC 1 Pb	Watts	Source 1 phase B real power
7174	SRC 1 Pc	Watts	Source 1 phase C real power
7176	SRC 1 Q	Vars	Source 1 three-phase reactive power
7178	SRC 1 Qa	Vars	Source 1 phase A reactive power
7180	SRC 1 Qb	Vars	Source 1 phase B reactive power
7182	SRC 1 Qc	Vars	Source 1 phase C reactive power
7184	SRC 1 S	VA	Source 1 three-phase apparent power
7186	SRC 1 Sa	VA	Source 1 phase A apparent power
7188	SRC 1 Sb	VA	Source 1 phase B apparent power
7190	SRC 1 Sc	VA	Source 1 phase C apparent power
7192	SRC 1 PF	---	Source 1 three-phase power factor
7193	SRC 1 Phase A PF	---	Source 1 phase A power factor
7194	SRC 1 Phase B PF	---	Source 1 phase B power factor
7195	SRC 1 Phase C PF	---	Source 1 phase C power factor
7200	SRC 2 P	Watts	Source 2 three-phase real power
7202	SRC 2 Pa	Watts	Source 2 phase A real power

Decimal address	FlexAnalog name	Units	Description
7204	SRC 2 Pb	Watts	Source 2 phase B real power
7206	SRC 2 Pc	Watts	Source 2 phase C real power
7208	SRC 2 Q	Vars	Source 2 three-phase reactive power
7210	SRC 2 Qa	Vars	Source 2 phase A reactive power
7212	SRC 2 Qb	Vars	Source 2 phase B reactive power
7214	SRC 2 Qc	Vars	Source 2 phase C reactive power
7216	SRC 2 S	VA	Source 2 three-phase apparent power
7218	SRC 2 Sa	VA	Source 2 phase A apparent power
7220	SRC 2 Sb	VA	Source 2 phase B apparent power
7222	SRC 2 Sc	VA	Source 2 phase C apparent power
7224	SRC 2 PF	---	Source 2 three-phase power factor
7225	SRC 2 Phase A PF	---	Source 2 phase A power factor
7226	SRC 2 Phase B PF	---	Source 2 phase B power factor
7227	SRC 2 Phase C PF	---	Source 2 phase C power factor
7232	SRC 3 P	Watts	Source 3 three-phase real power
7234	SRC 3 Pa	Watts	Source 3 phase A real power
7236	SRC 3 Pb	Watts	Source 3 phase B real power
7238	SRC 3 Pc	Watts	Source 3 phase C real power
7240	SRC 3 Q	Vars	Source 3 three-phase reactive power
7242	SRC 3 Qa	Vars	Source 3 phase A reactive power
7244	SRC 3 Qb	Vars	Source 3 phase B reactive power
7246	SRC 3 Qc	Vars	Source 3 phase C reactive power
7248	SRC 3 S	VA	Source 3 three-phase apparent power
7250	SRC 3 Sa	VA	Source 3 phase A apparent power
7252	SRC 3 Sb	VA	Source 3 phase B apparent power
7254	SRC 3 Sc	VA	Source 3 phase C apparent power
7256	SRC 3 PF	---	Source 3 three-phase power factor
7257	SRC 3 Phase A PF	---	Source 3 phase A power factor
7258	SRC 3 Phase B PF	---	Source 3 phase B power factor
7259	SRC 3 Phase C PF	---	Source 3 phase C power factor
7264	SRC 4 P	Watts	Source 4 three-phase real power
7266	SRC 4 Pa	Watts	Source 4 phase A real power
7268	SRC 4 Pb	Watts	Source 4 phase B real power
7270	SRC 4 Pc	Watts	Source 4 phase C real power
7272	SRC 4 Q	Vars	Source 4 three-phase reactive power
7274	SRC 4 Qa	Vars	Source 4 phase A reactive power
7276	SRC 4 Qb	Vars	Source 4 phase B reactive power
7278	SRC 4 Qc	Vars	Source 4 phase C reactive power
7280	SRC 4 S	VA	Source 4 three-phase apparent power
7282	SRC 4 Sa	VA	Source 4 phase A apparent power
7284	SRC 4 Sb	VA	Source 4 phase B apparent power
7286	SRC 4 Sc	VA	Source 4 phase C apparent power
7288	SRC 4 PF	---	Source 4 three-phase power factor
7289	SRC 4 Phase A PF	---	Source 4 phase A power factor
7290	SRC 4 Phase B PF	---	Source 4 phase B power factor
7291	SRC 4 Phase C PF	---	Source 4 phase C power factor

A

Decimal address	FlexAnalog name	Units	Description
7424	SRC 1 Pos Watthour	kWh	Source 1 positive Watthour
7426	SRC 1 Neg Watthour	Wh	Source 1 negative Watthour
7428	SRC 1 Pos varh	varh	Source 1 positive varhour
7430	SRC 1 Neg varh	varh	Source 1 negative varhour
7440	SRC 2 Pos Watthour	kWh	Source 2 positive Watthour
7442	SRC 2 Neg Watthour	Wh	Source 2 negative Watthour
7444	SRC 2 Pos varh	varh	Source 2 positive varhour
7446	SRC 2 Neg varh	varh	Source 2 negative varhour
7456	SRC 3 Pos Watthour	kWh	Source 3 positive Watthour
7458	SRC 3 Neg Watthour	kWh	Source 3 negative Watthour
7460	SRC 3 Pos varh	varh	Source 3 positive varhour
7462	SRC 3 Neg varh	varh	Source 3 negative varhour
7472	SRC 4 Pos Watthour	Wh	Source 4 positive Watthour
7474	SRC 4 Neg Watthour	Wh	Source 4 negative Watthour
7476	SRC 4 Pos varh	varh	Source 4 positive varhour
7478	SRC 4 Neg varh	varh	Source 4 negative varhour
7552	SRC 1 Frequency	Hz	Source 1 frequency
7554	SRC 2 Frequency	Hz	Source 2 frequency
7556	SRC 3 Frequency	Hz	Source 3 frequency
7558	SRC 4 Frequency	Hz	Source 4 frequency
7680	SRC 1 Demand Ia	Amps	Source 1 phase A current demand
7682	SRC 1 Demand Ib	Amps	Source 1 phase B current demand
7684	SRC 1 Demand Ic	Amps	Source 1 phase C current demand
7686	SRC 1 Demand Watt	Watts	Source 1 real power demand
7688	SRC 1 Demand var	Vars	Source 1 reactive power demand
7690	SRC 1 Demand VA	VA	Source 1 apparent power demand
7696	SRC 2 Demand Ia	Amps	Source 2 phase A current demand
7698	SRC 2 Demand Ib	Amps	Source 2 phase B current demand
7700	SRC 2 Demand Ic	Amps	Source 2 phase C current demand
7702	SRC 2 Demand Watt	Watts	Source 2 real power demand
7704	SRC 2 Demand var	Vars	Source 2 reactive power demand
7706	SRC 2 Demand VA	VA	Source 2 apparent power demand
7712	SRC 3 Demand Ia	Amps	Source 3 phase A current demand
7714	SRC 3 Demand Ib	Amps	Source 3 phase B current demand
7716	SRC 3 Demand Ic	Amps	Source 3 phase C current demand
7718	SRC 3 Demand Watt	Watts	Source 3 real power demand
7720	SRC 3 Demand var	Vars	Source 3 reactive power demand
7722	SRC 3 Demand VA	VA	Source 3 apparent power demand
7728	SRC 4 Demand Ia	Amps	Source 4 phase A current demand
7730	SRC 4 Demand Ib	Amps	Source 4 phase B current demand
7732	SRC 4 Demand Ic	Amps	Source 4 phase C current demand
7734	SRC 4 Demand Watt	Watts	Source 4 real power demand
7736	SRC 4 Demand var	Vars	Source 4 reactive power demand
7738	SRC 4 Demand VA	VA	Source 4 apparent power demand
8064	SRC 1 Va THD	%	Source 1 phase A voltage total harmonic distortion (THD)
8065	SRC 1 Va Harm[2]	%	Source 1 phase A voltage second harmonic

Decimal address	FlexAnalog name	Units	Description
8066	SRC 1 Va Harm[3]	%	Source 1 phase A voltage third harmonic
8067	SRC 1 Va Harm[4]	%	Source 1 phase A voltage fourth harmonic
8068	SRC 1 Va Harm[5]	%	Source 1 phase A voltage fifth harmonic
8069	SRC 1 Va Harm[6]	%	Source 1 phase A voltage sixth harmonic
8070	SRC 1 Va Harm[7]	%	Source 1 phase A voltage seventh harmonic
8071	SRC 1 Va Harm[8]	%	Source 1 phase A voltage eighth harmonic
8072	SRC 1 Va Harm[9]	%	Source 1 phase A voltage ninth harmonic
8073	SRC 1 Va Harm[10]	%	Source 1 phase A voltage tenth harmonic
8074	SRC 1 Va Harm[11]	%	Source 1 phase A voltage eleventh harmonic
8075	SRC 1 Va Harm[12]	%	Source 1 phase A voltage twelfth harmonic
8076	SRC 1 Va Harm[13]	%	Source 1 phase A voltage thirteenth harmonic
8077	SRC 1 Va Harm[14]	%	Source 1 phase A voltage fourteenth harmonic
8078	SRC 1 Va Harm[15]	%	Source 1 phase A voltage fifteenth harmonic
8079	SRC 1 Va Harm[16]	%	Source 1 phase A voltage sixteenth harmonic
8080	SRC 1 Va Harm[17]	%	Source 1 phase A voltage seventeenth harmonic
8081	SRC 1 Va Harm[18]	%	Source 1 phase A voltage eighteenth harmonic
8082	SRC 1 Va Harm[19]	%	Source 1 phase A voltage nineteenth harmonic
8083	SRC 1 Va Harm[20]	%	Source 1 phase A voltage twentieth harmonic
8084	SRC 1 Va Harm[21]	%	Source 1 phase A voltage twenty-first harmonic
8085	SRC 1 Va Harm[22]	%	Source 1 phase A voltage twenty-second harmonic
8086	SRC 1 Va Harm[23]	%	Source 1 phase A voltage twenty-third harmonic
8087	SRC 1 Va Harm[24]	%	Source 1 phase A voltage twenty-fourth harmonic
8088	SRC 1 Va Harm[25]	%	Source 1 phase A voltage twenty-fifth harmonic
8089	SRC 1 Vb THD	%	Source 1 phase B voltage total harmonic distortion (THD)
8090	SRC 1 Vb Harm[2]	%	Source 1 phase B voltage second harmonic
8091	SRC 1 Vb Harm[3]	%	Source 1 phase B voltage third harmonic
8092	SRC 1 Vb Harm[4]	%	Source 1 phase B voltage fourth harmonic
8093	SRC 1 Vb Harm[5]	%	Source 1 phase B voltage fifth harmonic
8094	SRC 1 Vb Harm[6]	%	Source 1 phase B voltage sixth harmonic
8095	SRC 1 Vb Harm[7]	%	Source 1 phase B voltage seventh harmonic
8096	SRC 1 Vb Harm[8]	%	Source 1 phase B voltage eighth harmonic
8097	SRC 1 Vb Harm[9]	%	Source 1 phase B voltage ninth harmonic
8098	SRC 1 Vb Harm[10]	%	Source 1 phase B voltage tenth harmonic
8099	SRC 1 Vb Harm[11]	%	Source 1 phase B voltage eleventh harmonic
8100	SRC 1 Vb Harm[12]	%	Source 1 phase B voltage twelfth harmonic
8101	SRC 1 Vb Harm[13]	%	Source 1 phase B voltage thirteenth harmonic
8102	SRC 1 Vb Harm[14]	%	Source 1 phase B voltage fourteenth harmonic
8103	SRC 1 Vb Harm[15]	%	Source 1 phase B voltage fifteenth harmonic
8104	SRC 1 Vb Harm[16]	%	Source 1 phase B voltage sixteenth harmonic
8105	SRC 1 Vb Harm[17]	%	Source 1 phase B voltage seventeenth harmonic
8106	SRC 1 Vb Harm[18]	%	Source 1 phase B voltage eighteenth harmonic
8107	SRC 1 Vb Harm[19]	%	Source 1 phase B voltage nineteenth harmonic
8108	SRC 1 Vb Harm[20]	%	Source 1 phase B voltage twentieth harmonic
8109	SRC 1 Vb Harm[21]	%	Source 1 phase B voltage twenty-first harmonic
8110	SRC 1 Vb Harm[22]	%	Source 1 phase B voltage twenty-second harmonic
8111	SRC 1 Vb Harm[23]	%	Source 1 phase B voltage twenty-third harmonic

A

Decimal address	FlexAnalog name	Units	Description
8112	SRC 1 Vb Harm[24]	%	Source 1 phase B voltage twenty-fourth harmonic
8113	SRC 1 Vb Harm[25]	%	Source 1 phase B voltage twenty-fifth harmonic
8114	SRC 1 Vc THD	%	Source 1 phase C voltage total harmonic distortion (THD)
8115	SRC 1 Vc Harm[2]	%	Source 1 phase C voltage second harmonic
8116	SRC 1 Vc Harm[3]	%	Source 1 phase C voltage third harmonic
8117	SRC 1 Vc Harm[4]	%	Source 1 phase C voltage fourth harmonic
8118	SRC 1 Vc Harm[5]	%	Source 1 phase C voltage fifth harmonic
8119	SRC 1 Vc Harm[6]	%	Source 1 phase C voltage sixth harmonic
8120	SRC 1 Vc Harm[7]	%	Source 1 phase C voltage seventh harmonic
8121	SRC 1 Vc Harm[8]	%	Source 1 phase C voltage eighth harmonic
8122	SRC 1 Vc Harm[9]	%	Source 1 phase C voltage ninth harmonic
8123	SRC 1 Vc Harm[10]	%	Source 1 phase C voltage tenth harmonic
8124	SRC 1 Vc Harm[11]	%	Source 1 phase C voltage eleventh harmonic
8125	SRC 1 Vc Harm[12]	%	Source 1 phase C voltage twelfth harmonic
8126	SRC 1 Vc Harm[13]	%	Source 1 phase C voltage thirteenth harmonic
8127	SRC 1 Vc Harm[14]	%	Source 1 phase C voltage fourteenth harmonic
8128	SRC 1 Vc Harm[15]	%	Source 1 phase C voltage fifteenth harmonic
8129	SRC 1 Vc Harm[16]	%	Source 1 phase C voltage sixteenth harmonic
8130	SRC 1 Vc Harm[17]	%	Source 1 phase C voltage seventeenth harmonic
8131	SRC 1 Vc Harm[18]	%	Source 1 phase C voltage eighteenth harmonic
8132	SRC 1 Vc Harm[19]	%	Source 1 phase C voltage nineteenth harmonic
8133	SRC 1 Vc Harm[20]	%	Source 1 phase C voltage twentieth harmonic
8134	SRC 1 Vc Harm[21]	%	Source 1 phase C voltage twenty-first harmonic
8135	SRC 1 Vc Harm[22]	%	Source 1 phase C voltage twenty-second harmonic
8136	SRC 1 Vc Harm[23]	%	Source 1 phase C voltage twenty-third harmonic
8137	SRC 1 Vc Harm[24]	%	Source 1 phase C voltage twenty-fourth harmonic
8138	SRC 1 Vc Harm[25]	%	Source 1 phase C voltage twenty-fifth harmonic
8139	SRC 2 Va THD	%	Source 2 phase A voltage total harmonic distortion (THD)
8140	SRC 2 Va Harm[2]	%	Source 2 phase A voltage second harmonic
8141	SRC 2 Va Harm[3]	%	Source 2 phase A voltage third harmonic
8142	SRC 2 Va Harm[4]	%	Source 2 phase A voltage fourth harmonic
8143	SRC 2 Va Harm[5]	%	Source 2 phase A voltage fifth harmonic
8144	SRC 2 Va Harm[6]	%	Source 2 phase A voltage sixth harmonic
8145	SRC 2 Va Harm[7]	%	Source 2 phase A voltage seventh harmonic
8146	SRC 2 Va Harm[8]	%	Source 2 phase A voltage eighth harmonic
8147	SRC 2 Va Harm[9]	%	Source 2 phase A voltage ninth harmonic
8148	SRC 2 Va Harm[10]	%	Source 2 phase A voltage tenth harmonic
8149	SRC 2 Va Harm[11]	%	Source 2 phase A voltage eleventh harmonic
8150	SRC 2 Va Harm[12]	%	Source 2 phase A voltage twelfth harmonic
8151	SRC 2 Va Harm[13]	%	Source 2 phase A voltage thirteenth harmonic
8152	SRC 2 Va Harm[14]	%	Source 2 phase A voltage fourteenth harmonic
8153	SRC 2 Va Harm[15]	%	Source 2 phase A voltage fifteenth harmonic
8154	SRC 2 Va Harm[16]	%	Source 2 phase A voltage sixteenth harmonic
8155	SRC 2 Va Harm[17]	%	Source 2 phase A voltage seventeenth harmonic
8156	SRC 2 Va Harm[18]	%	Source 2 phase A voltage eighteenth harmonic
8157	SRC 2 Va Harm[19]	%	Source 2 phase A voltage nineteenth harmonic

A

Decimal address	FlexAnalog name	Units	Description
8158	SRC 2 Va Harm[20]	%	Source 2 phase A voltage twentieth harmonic
8159	SRC 2 Va Harm[21]	%	Source 2 phase A voltage twenty-first harmonic
8160	SRC 2 Va Harm[22]	%	Source 2 phase A voltage twenty-second harmonic
8161	SRC 2 Va Harm[23]	%	Source 2 phase A voltage twenty-third harmonic
8162	SRC 2 Va Harm[24]	%	Source 2 phase A voltage twenty-fourth harmonic
8163	SRC 2 Va Harm[25]	%	Source 2 phase A voltage twenty-fifth harmonic
8164	SRC 2 Vb THD	%	Source 2 phase B voltage total harmonic distortion (THD)
8165	SRC 2 Vb Harm[2]	%	Source 2 phase B voltage second harmonic
8166	SRC 2 Vb Harm[3]	%	Source 2 phase B voltage third harmonic
8167	SRC 2 Vb Harm[4]	%	Source 2 phase B voltage fourth harmonic
8168	SRC 2 Vb Harm[5]	%	Source 2 phase B voltage fifth harmonic
8169	SRC 2 Vb Harm[6]	%	Source 2 phase B voltage sixth harmonic
8170	SRC 2 Vb Harm[7]	%	Source 2 phase B voltage seventh harmonic
8171	SRC 2 Vb Harm[8]	%	Source 2 phase B voltage eighth harmonic
8172	SRC 2 Vb Harm[9]	%	Source 2 phase B voltage ninth harmonic
8173	SRC 2 Vb Harm[10]	%	Source 2 phase B voltage tenth harmonic
8174	SRC 2 Vb Harm[11]	%	Source 2 phase B voltage eleventh harmonic
8175	SRC 2 Vb Harm[12]	%	Source 2 phase B voltage twelfth harmonic
8176	SRC 2 Vb Harm[13]	%	Source 2 phase B voltage thirteenth harmonic
8177	SRC 2 Vb Harm[14]	%	Source 2 phase B voltage fourteenth harmonic
8178	SRC 2 Vb Harm[15]	%	Source 2 phase B voltage fifteenth harmonic
8179	SRC 2 Vb Harm[16]	%	Source 2 phase B voltage sixteenth harmonic
8180	SRC 2 Vb Harm[17]	%	Source 2 phase B voltage seventeenth harmonic
8181	SRC 2 Vb Harm[18]	%	Source 2 phase B voltage eighteenth harmonic
8182	SRC 2 Vb Harm[19]	%	Source 2 phase B voltage nineteenth harmonic
8183	SRC 2 Vb Harm[20]	%	Source 2 phase B voltage twentieth harmonic
8184	SRC 2 Vb Harm[21]	%	Source 2 phase B voltage twenty-first harmonic
8185	SRC 2 Vb Harm[22]	%	Source 2 phase B voltage twenty-second harmonic
8186	SRC 2 Vb Harm[23]	%	Source 2 phase B voltage twenty-third harmonic
8187	SRC 2 Vb Harm[24]	%	Source 2 phase B voltage twenty-fourth harmonic
8188	SRC 2 Vb Harm[25]	%	Source 2 phase B voltage twenty-fifth harmonic
8189	SRC 2 Vc THD	%	Source 2 phase C voltage total harmonic distortion (THD)
8190	SRC 2 Vc Harm[2]	%	Source 2 phase C voltage second harmonic
8191	SRC 2 Vc Harm[3]	%	Source 2 phase C voltage third harmonic
8192	SRC 2 Vc Harm[4]	%	Source 2 phase C voltage fourth harmonic
8193	SRC 2 Vc Harm[5]	%	Source 2 phase C voltage fifth harmonic
8194	SRC 2 Vc Harm[6]	%	Source 2 phase C voltage sixth harmonic
8195	SRC 2 Vc Harm[7]	%	Source 2 phase C voltage seventh harmonic
8196	SRC 2 Vc Harm[8]	%	Source 2 phase C voltage eighth harmonic
8197	SRC 2 Vc Harm[9]	%	Source 2 phase C voltage ninth harmonic
8198	SRC 2 Vc Harm[10]	%	Source 2 phase C voltage tenth harmonic
8199	SRC 2 Vc Harm[11]	%	Source 2 phase C voltage eleventh harmonic
8200	SRC 2 Vc Harm[12]	%	Source 2 phase C voltage twelfth harmonic
8201	SRC 2 Vc Harm[13]	%	Source 2 phase C voltage thirteenth harmonic
8202	SRC 2 Vc Harm[14]	%	Source 2 phase C voltage fourteenth harmonic
8203	SRC 2 Vc Harm[15]	%	Source 2 phase C voltage fifteenth harmonic

A

Decimal address	FlexAnalog name	Units	Description
8204	SRC 2 Vc Harm[16]	%	Source 2 phase C voltage sixteenth harmonic
8205	SRC 2 Vc Harm[17]	%	Source 2 phase C voltage seventeenth harmonic
8206	SRC 2 Vc Harm[18]	%	Source 2 phase C voltage eighteenth harmonic
8207	SRC 2 Vc Harm[19]	%	Source 2 phase C voltage nineteenth harmonic
8208	SRC 2 Vc Harm[20]	%	Source 2 phase C voltage twentieth harmonic
8209	SRC 2 Vc Harm[21]	%	Source 2 phase C voltage twenty-first harmonic
8210	SRC 2 Vc Harm[22]	%	Source 2 phase C voltage twenty-second harmonic
8211	SRC 2 Vc Harm[23]	%	Source 2 phase C voltage twenty-third harmonic
8212	SRC 2 Vc Harm[24]	%	Source 2 phase C voltage twenty-fourth harmonic
8213	SRC 2 Vc Harm[25]	%	Source 2 phase C voltage twenty-fifth harmonic
8214	SRC 3 Va THD	%	Source 3 phase A voltage total harmonic distortion (THD)
8215	SRC 3 Va Harm[2]	%	Source 3 phase A voltage second harmonic
8216	SRC 3 Va Harm[3]	%	Source 3 phase A voltage third harmonic
8217	SRC 3 Va Harm[4]	%	Source 3 phase A voltage fourth harmonic
8218	SRC 3 Va Harm[5]	%	Source 3 phase A voltage fifth harmonic
8219	SRC 3 Va Harm[6]	%	Source 3 phase A voltage sixth harmonic
8220	SRC 3 Va Harm[7]	%	Source 3 phase A voltage seventh harmonic
8221	SRC 3 Va Harm[8]	%	Source 3 phase A voltage eighth harmonic
8222	SRC 3 Va Harm[9]	%	Source 3 phase A voltage ninth harmonic
8223	SRC 3 Va Harm[10]	%	Source 3 phase A voltage tenth harmonic
8224	SRC 3 Va Harm[11]	%	Source 3 phase A voltage eleventh harmonic
8225	SRC 3 Va Harm[12]	%	Source 3 phase A voltage twelfth harmonic
8226	SRC 3 Va Harm[13]	%	Source 3 phase A voltage thirteenth harmonic
8227	SRC 3 Va Harm[14]	%	Source 3 phase A voltage fourteenth harmonic
8228	SRC 3 Va Harm[15]	%	Source 3 phase A voltage fifteenth harmonic
8229	SRC 3 Va Harm[16]	%	Source 3 phase A voltage sixteenth harmonic
8230	SRC 3 Va Harm[17]	%	Source 3 phase A voltage seventeenth harmonic
8231	SRC 3 Va Harm[18]	%	Source 3 phase A voltage eighteenth harmonic
8232	SRC 3 Va Harm[19]	%	Source 3 phase A voltage nineteenth harmonic
8233	SRC 3 Va Harm[20]	%	Source 3 phase A voltage twentieth harmonic
8234	SRC 3 Va Harm[21]	%	Source 3 phase A voltage twenty-first harmonic
8235	SRC 3 Va Harm[22]	%	Source 3 phase A voltage twenty-second harmonic
8236	SRC 3 Va Harm[23]	%	Source 3 phase A voltage twenty-third harmonic
8237	SRC 3 Va Harm[24]	%	Source 3 phase A voltage twenty-fourth harmonic
8238	SRC 3 Va Harm[25]	%	Source 3 phase A voltage twenty-fifth harmonic
8239	SRC 3 Vb THD	%	Source 3 phase B voltage total harmonic distortion (THD)
8240	SRC 3 Vb Harm[2]	%	Source 3 phase B voltage second harmonic
8241	SRC 3 Vb Harm[3]	%	Source 3 phase B voltage third harmonic
8242	SRC 3 Vb Harm[4]	%	Source 3 phase B voltage fourth harmonic
8243	SRC 3 Vb Harm[5]	%	Source 3 phase B voltage fifth harmonic
8244	SRC 3 Vb Harm[6]	%	Source 3 phase B voltage sixth harmonic
8245	SRC 3 Vb Harm[7]	%	Source 3 phase B voltage seventh harmonic
8246	SRC 3 Vb Harm[8]	%	Source 3 phase B voltage eighth harmonic
8247	SRC 3 Vb Harm[9]	%	Source 3 phase B voltage ninth harmonic
8248	SRC 3 Vb Harm[10]	%	Source 3 phase B voltage tenth harmonic
8249	SRC 3 Vb Harm[11]	%	Source 3 phase B voltage eleventh harmonic

A

Decimal address	FlexAnalog name	Units	Description
8250	SRC 3 Vb Harm[12]	%	Source 3 phase B voltage twelfth harmonic
8251	SRC 3 Vb Harm[13]	%	Source 3 phase B voltage thirteenth harmonic
8252	SRC 3 Vb Harm[14]	%	Source 3 phase B voltage fourteenth harmonic
8253	SRC 3 Vb Harm[15]	%	Source 3 phase B voltage fifteenth harmonic
8254	SRC 3 Vb Harm[16]	%	Source 3 phase B voltage sixteenth harmonic
8255	SRC 3 Vb Harm[17]	%	Source 3 phase B voltage seventeenth harmonic
8256	SRC 3 Vb Harm[18]	%	Source 3 phase B voltage eighteenth harmonic
8257	SRC 3 Vb Harm[19]	%	Source 3 phase B voltage nineteenth harmonic
8258	SRC 3 Vb Harm[20]	%	Source 3 phase B voltage twentieth harmonic
8259	SRC 3 Vb Harm[21]	%	Source 3 phase B voltage twenty-first harmonic
8260	SRC 3 Vb Harm[22]	%	Source 3 phase B voltage twenty-second harmonic
8261	SRC 3 Vb Harm[23]	%	Source 3 phase B voltage twenty-third harmonic
8262	SRC 3 Vb Harm[24]	%	Source 3 phase B voltage twenty-fourth harmonic
8263	SRC 3 Vb Harm[25]	%	Source 3 phase B voltage twenty-fifth harmonic
8264	SRC 3 Vc THD	%	Source 3 phase C voltage total harmonic distortion (THD)
8265	SRC 3 Vc Harm[2]	%	Source 3 phase C voltage second harmonic
8266	SRC 3 Vc Harm[3]	%	Source 3 phase C voltage third harmonic
8267	SRC 3 Vc Harm[4]	%	Source 3 phase C voltage fourth harmonic
8268	SRC 3 Vc Harm[5]	%	Source 3 phase C voltage fifth harmonic
8269	SRC 3 Vc Harm[6]	%	Source 3 phase C voltage sixth harmonic
8270	SRC 3 Vc Harm[7]	%	Source 3 phase C voltage seventh harmonic
8271	SRC 3 Vc Harm[8]	%	Source 3 phase C voltage eighth harmonic
8272	SRC 3 Vc Harm[9]	%	Source 3 phase C voltage ninth harmonic
8273	SRC 3 Vc Harm[10]	%	Source 3 phase C voltage tenth harmonic
8274	SRC 3 Vc Harm[11]	%	Source 3 phase C voltage eleventh harmonic
8275	SRC 3 Vc Harm[12]	%	Source 3 phase C voltage twelfth harmonic
8276	SRC 3 Vc Harm[13]	%	Source 3 phase C voltage thirteenth harmonic
8277	SRC 3 Vc Harm[14]	%	Source 3 phase C voltage fourteenth harmonic
8278	SRC 3 Vc Harm[15]	%	Source 3 phase C voltage fifteenth harmonic
8279	SRC 3 Vc Harm[16]	%	Source 3 phase C voltage sixteenth harmonic
8280	SRC 3 Vc Harm[17]	%	Source 3 phase C voltage seventeenth harmonic
8281	SRC 3 Vc Harm[18]	%	Source 3 phase C voltage eighteenth harmonic
8282	SRC 3 Vc Harm[19]	%	Source 3 phase C voltage nineteenth harmonic
8283	SRC 3 Vc Harm[20]	%	Source 3 phase C voltage twentieth harmonic
8284	SRC 3 Vc Harm[21]	%	Source 3 phase C voltage twenty-first harmonic
8285	SRC 3 Vc Harm[22]	%	Source 3 phase C voltage twenty-second harmonic
8286	SRC 3 Vc Harm[23]	%	Source 3 phase C voltage twenty-third harmonic
8287	SRC 3 Vc Harm[24]	%	Source 3 phase C voltage twenty-fourth harmonic
8288	SRC 3 Vc Harm[25]	%	Source 3 phase C voltage twenty-fifth harmonic
8289	SRC 4 Va THD	%	Source 4 phase A voltage total harmonic distortion (THD)
8290	SRC 4 Va Harm[2]	%	Source 4 phase A voltage second harmonic
8291	SRC 4 Va Harm[3]	%	Source 4 phase A voltage third harmonic
8292	SRC 4 Va Harm[4]	%	Source 4 phase A voltage fourth harmonic
8293	SRC 4 Va Harm[5]	%	Source 4 phase A voltage fifth harmonic
8294	SRC 4 Va Harm[6]	%	Source 4 phase A voltage sixth harmonic
8295	SRC 4 Va Harm[7]	%	Source 4 phase A voltage seventh harmonic

A

Decimal address	FlexAnalog name	Units	Description
8296	SRC 4 Va Harm[8]	%	Source 4 phase A voltage eighth harmonic
8297	SRC 4 Va Harm[9]	%	Source 4 phase A voltage ninth harmonic
8298	SRC 4 Va Harm[10]	%	Source 4 phase A voltage tenth harmonic
8299	SRC 4 Va Harm[11]	%	Source 4 phase A voltage eleventh harmonic
8300	SRC 4 Va Harm[12]	%	Source 4 phase A voltage twelfth harmonic
8301	SRC 4 Va Harm[13]	%	Source 4 phase A voltage thirteenth harmonic
8302	SRC 4 Va Harm[14]	%	Source 4 phase A voltage fourteenth harmonic
8303	SRC 4 Va Harm[15]	%	Source 4 phase A voltage fifteenth harmonic
8304	SRC 4 Va Harm[16]	%	Source 4 phase A voltage sixteenth harmonic
8305	SRC 4 Va Harm[17]	%	Source 4 phase A voltage seventeenth harmonic
8306	SRC 4 Va Harm[18]	%	Source 4 phase A voltage eighteenth harmonic
8307	SRC 4 Va Harm[19]	%	Source 4 phase A voltage nineteenth harmonic
8308	SRC 4 Va Harm[20]	%	Source 4 phase A voltage twentieth harmonic
8309	SRC 4 Va Harm[21]	%	Source 4 phase A voltage twenty-first harmonic
8310	SRC 4 Va Harm[22]	%	Source 4 phase A voltage twenty-second harmonic
8311	SRC 4 Va Harm[23]	%	Source 4 phase A voltage twenty-third harmonic
8312	SRC 4 Va Harm[24]	%	Source 4 phase A voltage twenty-fourth harmonic
8313	SRC 4 Va Harm[25]	%	Source 4 phase A voltage twenty-fifth harmonic
8314	SRC 4 Vb THD	%	Source 4 phase B voltage total harmonic distortion (THD)
8315	SRC 4 Vb Harm[2]	%	Source 4 phase B voltage second harmonic
8316	SRC 4 Vb Harm[3]	%	Source 4 phase B voltage third harmonic
8317	SRC 4 Vb Harm[4]	%	Source 4 phase B voltage fourth harmonic
8318	SRC 4 Vb Harm[5]	%	Source 4 phase B voltage fifth harmonic
8319	SRC 4 Vb Harm[6]	%	Source 4 phase B voltage sixth harmonic
8320	SRC 4 Vb Harm[7]	%	Source 4 phase B voltage seventh harmonic
8321	SRC 4 Vb Harm[8]	%	Source 4 phase B voltage eighth harmonic
8322	SRC 4 Vb Harm[9]	%	Source 4 phase B voltage ninth harmonic
8323	SRC 4 Vb Harm[10]	%	Source 4 phase B voltage tenth harmonic
8324	SRC 4 Vb Harm[11]	%	Source 4 phase B voltage eleventh harmonic
8325	SRC 4 Vb Harm[12]	%	Source 4 phase B voltage twelfth harmonic
8326	SRC 4 Vb Harm[13]	%	Source 4 phase B voltage thirteenth harmonic
8327	SRC 4 Vb Harm[14]	%	Source 4 phase B voltage fourteenth harmonic
8328	SRC 4 Vb Harm[15]	%	Source 4 phase B voltage fifteenth harmonic
8329	SRC 4 Vb Harm[16]	%	Source 4 phase B voltage sixteenth harmonic
8330	SRC 4 Vb Harm[17]	%	Source 4 phase B voltage seventeenth harmonic
8331	SRC 4 Vb Harm[18]	%	Source 4 phase B voltage eighteenth harmonic
8332	SRC 4 Vb Harm[19]	%	Source 4 phase B voltage nineteenth harmonic
8333	SRC 4 Vb Harm[20]	%	Source 4 phase B voltage twentieth harmonic
8334	SRC 4 Vb Harm[21]	%	Source 4 phase B voltage twenty-first harmonic
8335	SRC 4 Vb Harm[22]	%	Source 4 phase B voltage twenty-second harmonic
8336	SRC 4 Vb Harm[23]	%	Source 4 phase B voltage twenty-third harmonic
8337	SRC 4 Vb Harm[24]	%	Source 4 phase B voltage twenty-fourth harmonic
8338	SRC 4 Vb Harm[25]	%	Source 4 phase B voltage twenty-fifth harmonic
8339	SRC 4 Vc THD	%	Source 4 phase C voltage total harmonic distortion (THD)
8340	SRC 4 Vc Harm[2]	%	Source 4 phase C voltage second harmonic
8341	SRC 4 Vc Harm[3]	%	Source 4 phase C voltage third harmonic

Decimal address	FlexAnalog name	Units	Description
8342	SRC 4 Vc Harm[4]	%	Source 4 phase C voltage fourth harmonic
8343	SRC 4 Vc Harm[5]	%	Source 4 phase C voltage fifth harmonic
8344	SRC 4 Vc Harm[6]	%	Source 4 phase C voltage sixth harmonic
8345	SRC 4 Vc Harm[7]	%	Source 4 phase C voltage seventh harmonic
8346	SRC 4 Vc Harm[8]	%	Source 4 phase C voltage eighth harmonic
8347	SRC 4 Vc Harm[9]	%	Source 4 phase C voltage ninth harmonic
8348	SRC 4 Vc Harm[10]	%	Source 4 phase C voltage tenth harmonic
8349	SRC 4 Vc Harm[11]	%	Source 4 phase C voltage eleventh harmonic
8350	SRC 4 Vc Harm[12]	%	Source 4 phase C voltage twelfth harmonic
8351	SRC 4 Vc Harm[13]	%	Source 4 phase C voltage thirteenth harmonic
8352	SRC 4 Vc Harm[14]	%	Source 4 phase C voltage fourteenth harmonic
8353	SRC 4 Vc Harm[15]	%	Source 4 phase C voltage fifteenth harmonic
8354	SRC 4 Vc Harm[16]	%	Source 4 phase C voltage sixteenth harmonic
8355	SRC 4 Vc Harm[17]	%	Source 4 phase C voltage seventeenth harmonic
8356	SRC 4 Vc Harm[18]	%	Source 4 phase C voltage eighteenth harmonic
8357	SRC 4 Vc Harm[19]	%	Source 4 phase C voltage nineteenth harmonic
8358	SRC 4 Vc Harm[20]	%	Source 4 phase C voltage twentieth harmonic
8359	SRC 4 Vc Harm[21]	%	Source 4 phase C voltage twenty-first harmonic
8360	SRC 4 Vc Harm[22]	%	Source 4 phase C voltage twenty-second harmonic
8361	SRC 4 Vc Harm[23]	%	Source 4 phase C voltage twenty-third harmonic
8362	SRC 4 Vc Harm[24]	%	Source 4 phase C voltage twenty-fourth harmonic
8363	SRC 4 Vc Harm[25]	%	Source 4 phase C voltage twenty-fifth harmonic
8692	Brk 3 Arc Amp A	kA2-cyc	Breaker 3 arcing amp phase A
8694	Brk 3 Arc Amp B	kA2-cyc	Breaker 3 arcing amp phase B
8696	Brk 3 Arc Amp C	kA2-cyc	Breaker 3 arcing amp phase C
8698	Brk 3 Op Time A	ms	Breaker 3 operating time phase A
8699	Brk 3 Op Time B	ms	Breaker 3 operating time phase B
8700	Brk 3 Op Time C	ms	Breaker 3 operating time phase C
8701	Brk 3 Op Time	ms	Breaker 3 operating time
8702	Brk 4 Arc Amp A	kA2-cyc	Breaker 4 arcing amp phase A
8704	Brk 4 Arc Amp B	kA2-cyc	Breaker 4 arcing amp phase B
8706	Brk 4 Arc Amp C	kA2-cyc	Breaker 4 arcing amp phase C
8708	Brk 4 Op Time A	ms	Breaker 4 operating time phase A
8709	Brk 4 Op Time B	ms	Breaker 4 operating time phase B
8710	Brk 4 Op Time C	ms	Breaker 4 operating time phase C
8711	Brk 4 Op Time	ms	Breaker 4 operating time
9024	Prefault Ia Mag [1]	Amps	Fault 1 pre-fault phase A current magnitude
9026	Prefault Ia Ang [1]	Degrees	Fault 1 pre-fault phase A current angle
9027	Prefault Ib Mag [1]	Amps	Fault 1 pre-fault phase B current magnitude
9029	Prefault Ib Ang [1]	Degrees	Fault 1 pre-fault phase B current angle
9030	Prefault Ic Mag [1]	Amps	Fault 1 pre-fault phase C current magnitude
9032	Prefault Ic Ang [1]	Degrees	Fault 1 pre-fault phase C current angle
9033	Prefault Va Mag [1]	Volts	Fault 1 pre-fault phase A voltage magnitude
9035	Prefault Va Ang [1]	Degrees	Fault 1 pre-fault phase A voltage angle
9036	Prefault Vb Mag [1]	Volts	Fault 1 pre-fault phase B voltage magnitude
9038	Prefault Vb Ang [1]	Degrees	Fault 1 pre-fault phase B voltage angle

A

Decimal address	FlexAnalog name	Units	Description
9039	Prefault Vc Mag [1]	Volts	Fault 1 pre-fault phase C voltage magnitude
9041	Prefault Vc Ang [1]	Degrees	Fault 1 pre-fault phase C voltage angle
9042	Fault Ia Mag [1]	Amps	Fault 1 post-fault phase A current magnitude
9044	Fault Ia Ang [1]	Degrees	Fault 1 post-fault phase A current angle
9045	Fault Ib Mag [1]	Amps	Fault 1 post-fault phase B current magnitude
9047	Fault Ib Ang [1]	Degrees	Fault 1 post-fault phase B current angle
9048	Fault Ic Mag [1	Amps	Fault 1 post-fault phase C current magnitude
9050	Fault Ic Ang [1]	Degrees	Fault 1 post-fault phase C current angle
9051	Fault Va Mag [1]	Volts	Fault 1 post-fault phase A voltage magnitude
9053	Fault Va Ang [1]	Degrees	Fault 1 post-fault phase A voltage angle
9054	Fault Vb Mag [1]	Volts	Fault 1 post-fault phase B voltage magnitude
9056	Fault Vb Ang [1]	Degrees	Fault 1 post-fault phase B voltage angle
9057	Fault Vc Mag [1]	Volts	Fault 1 post-fault phase C voltage magnitude
9059	Fault Vc Ang [1]	Degrees	Fault 1 post-fault phase C voltage angle
9060	Fault Type [1]	---	Fault 1 type
9061	Fault Location [1]	---	Fault 1 location
9344	Local IA Mag	Amps	Local terminal phase A current magnitude
9346	Local IB Mag	Amps	Local terminal phase B current magnitude
9348	Local IC Mag	Amps	Local terminal phase C current magnitude
9350	Terminal 1 IA Mag	Amps	Remote terminal 1 phase A current magnitude
9352	Terminal 1 IB Mag	Amps	Remote terminal 1 phase B current magnitude
9354	Terminal 1 IC Mag	Amps	Remote terminal 1 phase C current magnitude
9356	Terminal 2 IA Mag	Amps	Remote terminal 2 phase A current magnitude
9358	Terminal 2 IB Mag	Amps	Remote terminal 2 phase B current magnitude
9360	Terminal 2 IC Mag	Amps	Remote terminal 2 phase C current magnitude
9362	Diff Curr IA Mag	Amps	Differential current phase A magnitude
9364	Diff Curr IB Mag	Amps	Differential current phase B magnitude
9366	Diff Curr IC Mag	Amps	Differential current phase C magnitude
9368	Local IA Angle	Degrees	Local terminal current phase A angle
9369	Local IB Angle	Degrees	Local terminal current phase B angle
9370	Local IC Angle	Degrees	Local terminal current phase C angle
9371	Terminal 1 IA Angle	Degrees	Remote terminal 1 current phase A angle
9372	Terminal 1 IB Angle	Degrees	Remote terminal 1 current phase B angle
9373	Terminal 1 IC Angle	Degrees	Remote terminal 1 current phase C angle
9374	Terminal 2 IA Angle	Degrees	Remote terminal 2 current phase A angle
9375	Terminal 2 IB Angle	Degrees	Remote terminal 2 current phase B angle
9376	Terminal 2 IC Angle	Degrees	Remote terminal 2 current phase C angle
9377	Diff Curr IA Angle	Degrees	Differential current phase A angle
9378	Diff Curr IB Angle	Degrees	Differential current phase B angle
9379	Diff Curr IC Angle	Degrees	Differential current phase C angle
9380	Op Square Curr IA	Amps	Phase A operating square current
9382	Op Square Curr IB	Amps	Phase B operating square current
9384	Op Square Curr IC	Amps	Phase C operating square current
9386	Rest Square Curr IA	Amps	Phase A restraint square current
9388	Rest Square Curr IB	Amps	Phase B restraint square current
9390	Rest Square Curr IC	Amps	Phase C restraint square current

A

Decimal address	FlexAnalog name	Units	Description
9392	Rest Curr IA	Amps	Restraint current IA
9394	Rest Curr IB	Amps	Restraint current IB
9396	Rest Curr IC	Amps	Restraint current IC
9398	Diff Curr IG Mag	Amps	Differential current IG Magnitude
9400	Diff Curr IG Angle	Degrees	Differential current IG Angle
9401	Rest Curr IG	Amps	Restraint current IG
9403	Local IG Mag	Amps	Local IG magnitude
9405	Local IG Angle	Degrees	Local IG angle
9406	Terminal 1 IG Mag	Amps	Remote 1 IG magnitude
9408	Terminal 1 IG Angle	Degrees	Remote 1 IG angle
9409	Terminal 2 IG Mag	Amps	Remote 2 IG magnitude
9411	Terminal 2 IG Angle	Amps	Remote 2 IG angle
The following fault locator FlexAnalog parameters (9412 to 9420) values work properly when all relays are connected as wye or all relays are connected as delta.			
9412	Local Vcomp Mag	Volts	Local fault locator composite voltage magnitude
9414	Local Vcomp Ang	Degrees	Local fault locator composite voltage angle
9415	Term 1 Vcomp Mag	Volts	Terminal 1 fault locator composite voltage magnitude
9417	Term 1 Vcomp Ang	Degrees	Terminal 1 fault locator composite voltage angle
9418	Term 2 Vcomp Mag	Volts	Terminal 2 fault locator composite voltage magnitude
9420	Term 2 Vcomp Ang	Degrees	Terminal 2 fault locator composite voltage angle
9427	Fault Loop Resistance	Ohms	Fault 1 fault loop resistance
9429	Fault Loop Reactance	Ohms	Fault 1 fault loop reactance
9447	Fault Resistance	Ohms	Fault 1 fault resistance
9449	Faulted Segment	---	Fault 1 faulted segment
9581	PMU 1 Va Mag	Volts	Phasor measurement unit 1 phase A voltage magnitude
9583	PMU 1 Va Angle	Degrees	Phasor measurement unit 1 phase A voltage angle
9584	PMU 1 Vb Mag	Volts	Phasor measurement unit 1 phase B voltage magnitude
9586	PMU 1 Vb Angle	Degrees	Phasor measurement unit 1 phase B voltage angle
9587	PMU 1 Vc Mag	Volts	Phasor measurement unit 1 phase C voltage magnitude
9589	PMU 1 Vc Angle	Degrees	Phasor measurement unit 1 phase C voltage angle
9590	PMU 1 Vx Mag	Volts	Phasor measurement unit 1 auxiliary voltage magnitude
9592	PMU 1 Vx Angle	Degrees	Phasor measurement unit 1 auxiliary voltage angle
9593	PMU 1 V1 Mag	Volts	Phasor measurement unit 1 positive-sequence voltage magnitude
9595	PMU 1 V1 Angle	Degrees	Phasor measurement unit 1 positive-sequence voltage angle
9596	PMU 1 V2 Mag	Volts	Phasor measurement unit 1 negative-sequence voltage magnitude
9598	PMU 1 V2 Angle	Degrees	Phasor measurement unit 1 negative-sequence voltage angle
9599	PMU 1 V0 Mag	Volts	Phasor measurement unit 1 zero-sequence voltage magnitude
9601	PMU 1 V0 Angle	Degrees	Phasor measurement unit 1 zero-sequence voltage angle
9602	PMU 1 Ia Mag	Amps	Phasor measurement unit 1 phase A current magnitude
9604	PMU 1 Ia Angle	Degrees	Phasor measurement unit 1 phase A current angle
9605	PMU 1 Ib Mag	Amps	Phasor measurement unit 1 phase B current magnitude
9607	PMU 1 Ib Angle	Degrees	Phasor measurement unit 1 phase B current angle
9608	PMU 1 Ic Mag	Amps	Phasor measurement unit 1 phase C current magnitude
9610	PMU 1 Ic Angle	Degrees	Phasor measurement unit 1 phase C current angle
9611	PMU 1 Ig Mag	Amps	Phasor measurement unit 1 ground current magnitude
9613	PMU 1 Ig Angle	Degrees	Phasor measurement unit 1 ground current angle

A

Decimal address	FlexAnalog name	Units	Description
9614	PMU 1 I1 Mag	Amps	Phasor measurement unit 1 positive-sequence current magnitude
9616	PMU 1 I1 Angle	Degrees	Phasor measurement unit 1 positive-sequence current angle
9617	PMU 1 I2 Mag	Amps	Phasor measurement unit 1 negative-sequence current magnitude
9619	PMU 1 I2 Angle	Degrees	Phasor measurement unit 1 negative-sequence current angle
9620	PMU 1 I0 Mag	Amps	Phasor measurement unit 1 zero-sequence current magnitude
9622	PMU 1 I0 Angle	Degrees	Phasor measurement unit 1 zero-sequence current angle
9623	PMU 1 Freq	Hz	Phasor measurement unit 1 frequency
9625	PMU 1 df dt	Hz/s	Phasor measurement unit 1 rate of change of frequency
9626	PMU 1 Conf Ch	---	Phasor measurement unit 1 configuration change counter
10240	SRC 1 Ia THD	%	Source 1 phase A current total harmonic distortion
10241	SRC 1 Ia Harm[2]	%	Source 1 phase A current second harmonic
10242	SRC 1 Ia Harm[3]	%	Source 1 phase A current third harmonic
10243	SRC 1 Ia Harm[4]	%	Source 1 phase A current fourth harmonic
10244	SRC 1 Ia Harm[5]	%	Source 1 phase A current fifth harmonic
10245	SRC 1 Ia Harm[6]	%	Source 1 phase A current sixth harmonic
10246	SRC 1 Ia Harm[7]	%	Source 1 phase A current seventh harmonic
10247	SRC 1 Ia Harm[8]	%	Source 1 phase A current eighth harmonic
10248	SRC 1 Ia Harm[9]	%	Source 1 phase A current ninth harmonic
10249	SRC 1 Ia Harm[10]	%	Source 1 phase A current tenth harmonic
10250	SRC 1 Ia Harm[11]	%	Source 1 phase A current eleventh harmonic
10251	SRC 1 Ia Harm[12]	%	Source 1 phase A current twelfth harmonic
10252	SRC 1 Ia Harm[13]	%	Source 1 phase A current thirteenth harmonic
10253	SRC 1 Ia Harm[14]	%	Source 1 phase A current fourteenth harmonic
10254	SRC 1 Ia Harm[15]	%	Source 1 phase A current fifteenth harmonic
10255	SRC 1 Ia Harm[16]	%	Source 1 phase A current sixteenth harmonic
10256	SRC 1 Ia Harm[17]	%	Source 1 phase A current seventeenth harmonic
10257	SRC 1 Ia Harm[18]	%	Source 1 phase A current eighteenth harmonic
10258	SRC 1 Ia Harm[19]	%	Source 1 phase A current nineteenth harmonic
10259	SRC 1 Ia Harm[20]	%	Source 1 phase A current twentieth harmonic
10260	SRC 1 Ia Harm[21]	%	Source 1 phase A current twenty-first harmonic
10261	SRC 1 Ia Harm[22]	%	Source 1 phase A current twenty-second harmonic
10262	SRC 1 Ia Harm[23]	%	Source 1 phase A current twenty-third harmonic
10263	SRC 1 Ia Harm[24]	%	Source 1 phase A current twenty-fourth harmonic
10264	SRC 1 Ia Harm[25]	%	Source 1 phase A current twenty-fifth harmonic
10273	SRC 1 Ib THD	%	Source 1 phase B current total harmonic distortion
10274	SRC 1 Ib Harm[2]	%	Source 1 phase B current second harmonic
10275	SRC 1 Ib Harm[3]	%	Source 1 phase B current third harmonic
10276	SRC 1 Ib Harm[4]	%	Source 1 phase B current fourth harmonic
10277	SRC 1 Ib Harm[5]	%	Source 1 phase B current fifth harmonic
10278	SRC 1 Ib Harm[6]	%	Source 1 phase B current sixth harmonic
10279	SRC 1 Ib Harm[7]	%	Source 1 phase B current seventh harmonic
10280	SRC 1 Ib Harm[8]	%	Source 1 phase B current eighth harmonic
10281	SRC 1 Ib Harm[9]	%	Source 1 phase B current ninth harmonic
10282	SRC 1 Ib Harm[10]	%	Source 1 phase B current tenth harmonic
10283	SRC 1 Ib Harm[11]	%	Source 1 phase B current eleventh harmonic
10284	SRC 1 Ib Harm[12]	%	Source 1 phase B current twelfth harmonic

A

Decimal address	FlexAnalog name	Units	Description
10285	SRC 1 Ib Harm[13]	%	Source 1 phase B current thirteenth harmonic
10286	SRC 1 Ib Harm[14]	%	Source 1 phase B current fourteenth harmonic
10287	SRC 1 Ib Harm[15]	%	Source 1 phase B current fifteenth harmonic
10288	SRC 1 Ib Harm[16]	%	Source 1 phase B current sixteenth harmonic
10289	SRC 1 Ib Harm[17]	%	Source 1 phase B current seventeenth harmonic
10290	SRC 1 Ib Harm[18]	%	Source 1 phase B current eighteenth harmonic
10291	SRC 1 Ib Harm[19]	%	Source 1 phase B current nineteenth harmonic
10292	SRC 1 Ib Harm[20]	%	Source 1 phase B current twentieth harmonic
10293	SRC 1 Ib Harm[21]	%	Source 1 phase B current twenty-first harmonic
10294	SRC 1 Ib Harm[22]	%	Source 1 phase B current twenty-second harmonic
10295	SRC 1 Ib Harm[23]	%	Source 1 phase B current twenty-third harmonic
10296	SRC 1 Ib Harm[24]	%	Source 1 phase B current twenty-fourth harmonic
10297	SRC 1 Ib Harm[25]	%	Source 1 phase B current twenty-fifth harmonic
10306	SRC 1 Ic THD	%	Source 1 phase C current total harmonic distortion
10307	SRC 1 Ic Harm[2]	%	Source 1 phase C current second harmonic
10308	SRC 1 Ic Harm[3]	%	Source 1 phase C current third harmonic
10309	SRC 1 Ic Harm[4]	%	Source 1 phase C current fourth harmonic
10310	SRC 1 Ic Harm[5]	%	Source 1 phase C current fifth harmonic
10311	SRC 1 Ic Harm[6]	%	Source 1 phase C current sixth harmonic
10312	SRC 1 Ic Harm[7]	%	Source 1 phase C current seventh harmonic
10313	SRC 1 Ic Harm[8]	%	Source 1 phase C current eighth harmonic
10314	SRC 1 Ic Harm[9]	%	Source 1 phase C current ninth harmonic
10315	SRC 1 Ic Harm[10]	%	Source 1 phase C current tenth harmonic
10316	SRC 1 Ic Harm[11]	%	Source 1 phase C current eleventh harmonic
10317	SRC 1 Ic Harm[12]	%	Source 1 phase C current twelfth harmonic
10318	SRC 1 Ic Harm[13]	%	Source 1 phase C current thirteenth harmonic
10319	SRC 1 Ic Harm[14]	%	Source 1 phase C current fourteenth harmonic
10320	SRC 1 Ic Harm[15]	%	Source 1 phase C current fifteenth harmonic
10321	SRC 1 Ic Harm[16]	%	Source 1 phase C current sixteenth harmonic
10322	SRC 1 Ic Harm[17]	%	Source 1 phase C current seventeenth harmonic
10323	SRC 1 Ic Harm[18]	%	Source 1 phase C current eighteenth harmonic
10324	SRC 1 Ic Harm[19]	%	Source 1 phase C current nineteenth harmonic
10325	SRC 1 Ic Harm[20]	%	Source 1 phase C current twentieth harmonic
10326	SRC 1 Ic Harm[21]	%	Source 1 phase C current twenty-first harmonic
10327	SRC 1 Ic Harm[22]	%	Source 1 phase C current twenty-second harmonic
10328	SRC 1 Ic Harm[23]	%	Source 1 phase C current twenty-third harmonic
10329	SRC 1 Ic Harm[24]	%	Source 1 phase C current twenty-fourth harmonic
10330	SRC 1 Ic Harm[25]	%	Source 1 phase C current twenty-fifth harmonic
10339	SRC 2 Ia THD	%	Source 2 phase A current total harmonic distortion
10340	SRC 2 Ia Harm[2]	%	Source 2 phase A current second harmonic
10341	SRC 2 Ia Harm[3]	%	Source 2 phase A current third harmonic
10342	SRC 2 Ia Harm[4]	%	Source 2 phase A current fourth harmonic
10343	SRC 2 Ia Harm[5]	%	Source 2 phase A current fifth harmonic
10344	SRC 2 Ia Harm[6]	%	Source 2 phase A current sixth harmonic
10345	SRC 2 Ia Harm[7]	%	Source 2 phase A current seventh harmonic
10346	SRC 2 Ia Harm[8]	%	Source 2 phase A current eighth harmonic

A

Decimal address	FlexAnalog name	Units	Description
10347	SRC 2 Ia Harm[9]	%	Source 2 phase A current ninth harmonic
10348	SRC 2 Ia Harm[10]	%	Source 2 phase A current tenth harmonic
10349	SRC 2 Ia Harm[11]	%	Source 2 phase A current eleventh harmonic
10350	SRC 2 Ia Harm[12]	%	Source 2 phase A current twelfth harmonic
10351	SRC 2 Ia Harm[13]	%	Source 2 phase A current thirteenth harmonic
10352	SRC 2 Ia Harm[14]	%	Source 2 phase A current fourteenth harmonic
10353	SRC 2 Ia Harm[15]	%	Source 2 phase A current fifteenth harmonic
10354	SRC 2 Ia Harm[16]	%	Source 2 phase A current sixteenth harmonic
10355	SRC 2 Ia Harm[17]	%	Source 2 phase A current seventeenth harmonic
10356	SRC 2 Ia Harm[18]	%	Source 2 phase A current eighteenth harmonic
10357	SRC 2 Ia Harm[19]	%	Source 2 phase A current nineteenth harmonic
10358	SRC 2 Ia Harm[20]	%	Source 2 phase A current twentieth harmonic
10359	SRC 2 Ia Harm[21]	%	Source 2 phase A current twenty-first harmonic
10360	SRC 2 Ia Harm[22]	%	Source 2 phase A current twenty-second harmonic
10361	SRC 2 Ia Harm[23]	%	Source 2 phase A current twenty-third harmonic
10362	SRC 2 Ia Harm[24]	%	Source 2 phase A current twenty-fourth harmonic
10363	SRC 2 Ia Harm[25]	%	Source 2 phase A current twenty-fifth harmonic
10372	SRC 2 Ib THD	%	Source 2 phase B current total harmonic distortion
10373	SRC 2 Ib Harm[2]	%	Source 2 phase B current second harmonic
10374	SRC 2 Ib Harm[3]	%	Source 2 phase B current third harmonic
10375	SRC 2 Ib Harm[4]	%	Source 2 phase B current fourth harmonic
10376	SRC 2 Ib Harm[5]	%	Source 2 phase B current fifth harmonic
10377	SRC 2 Ib Harm[6]	%	Source 2 phase B current sixth harmonic
10378	SRC 2 Ib Harm[7]	%	Source 2 phase B current seventh harmonic
10379	SRC 2 Ib Harm[8]	%	Source 2 phase B current eighth harmonic
10380	SRC 2 Ib Harm[9]	%	Source 2 phase B current ninth harmonic
10381	SRC 2 Ib Harm[10]	%	Source 2 phase B current tenth harmonic
10382	SRC 2 Ib Harm[11]	%	Source 2 phase B current eleventh harmonic
10383	SRC 2 Ib Harm[12]	%	Source 2 phase B current twelfth harmonic
10384	SRC 2 Ib Harm[13]	%	Source 2 phase B current thirteenth harmonic
10385	SRC 2 Ib Harm[14]	%	Source 2 phase B current fourteenth harmonic
10386	SRC 2 Ib Harm[15]	%	Source 2 phase B current fifteenth harmonic
10387	SRC 2 Ib Harm[16]	%	Source 2 phase B current sixteenth harmonic
10388	SRC 2 Ib Harm[17]	%	Source 2 phase B current seventeenth harmonic
10389	SRC 2 Ib Harm[18]	%	Source 2 phase B current eighteenth harmonic
10390	SRC 2 Ib Harm[19]	%	Source 2 phase B current nineteenth harmonic
10391	SRC 2 Ib Harm[20]	%	Source 2 phase B current twentieth harmonic
10392	SRC 2 Ib Harm[21]	%	Source 2 phase B current twenty-first harmonic
10393	SRC 2 Ib Harm[22]	%	Source 2 phase B current twenty-second harmonic
10394	SRC 2 Ib Harm[23]	%	Source 2 phase B current twenty-third harmonic
10395	SRC 2 Ib Harm[24]	%	Source 2 phase B current twenty-fourth harmonic
10396	SRC 2 Ib Harm[25]	%	Source 2 phase B current twenty-fifth harmonic
10405	SRC 2 Ic THD	%	Source 2 phase C current total harmonic distortion
10406	SRC 2 Ic Harm[2]	%	Source 2 phase C current second harmonic
10407	SRC 2 Ic Harm[3]	%	Source 2 phase C current third harmonic
10408	SRC 2 Ic Harm[4]	%	Source 2 phase C current fourth harmonic

A

Decimal address	FlexAnalog name	Units	Description
10409	SRC 2 Ic Harm[5]	%	Source 2 phase C current fifth harmonic
10410	SRC 2 Ic Harm[6]	%	Source 2 phase C current sixth harmonic
10411	SRC 2 Ic Harm[7]	%	Source 2 phase C current seventh harmonic
10412	SRC 2 Ic Harm[8]	%	Source 2 phase C current eighth harmonic
10413	SRC 2 Ic Harm[9]	%	Source 2 phase C current ninth harmonic
10414	SRC 2 Ic Harm[10]	%	Source 2 phase C current tenth harmonic
10415	SRC 2 Ic Harm[11]	%	Source 2 phase C current eleventh harmonic
10416	SRC 2 Ic Harm[12]	%	Source 2 phase C current twelfth harmonic
10417	SRC 2 Ic Harm[13]	%	Source 2 phase C current thirteenth harmonic
10418	SRC 2 Ic Harm[14]	%	Source 2 phase C current fourteenth harmonic
10419	SRC 2 Ic Harm[15]	%	Source 2 phase C current fifteenth harmonic
10420	SRC 2 Ic Harm[16]	%	Source 2 phase C current sixteenth harmonic
10421	SRC 2 Ic Harm[17]	%	Source 2 phase C current seventeenth harmonic
10422	SRC 2 Ic Harm[18]	%	Source 2 phase C current eighteenth harmonic
10423	SRC 2 Ic Harm[19]	%	Source 2 phase C current nineteenth harmonic
10424	SRC 2 Ic Harm[20]	%	Source 2 phase C current twentieth harmonic
10425	SRC 2 Ic Harm[21]	%	Source 2 phase C current twenty-first harmonic
10426	SRC 2 Ic Harm[22]	%	Source 2 phase C current twenty-second harmonic
10427	SRC 2 Ic Harm[23]	%	Source 2 phase C current twenty-third harmonic
10428	SRC 2 Ic Harm[24]	%	Source 2 phase C current twenty-fourth harmonic
10429	SRC 2 Ic Harm[25]	%	Source 2 phase C current twenty-fifth harmonic
10438	SRC 3 Ia THD	%	Source 3 phase A current total harmonic distortion
10439	SRC 3 Ia Harm[2]	%	Source 3 phase A current second harmonic
10440	SRC 3 Ia Harm[3]	%	Source 3 phase A current third harmonic
10441	SRC 3 Ia Harm[4]	%	Source 3 phase A current fourth harmonic
10442	SRC 3 Ia Harm[5]	%	Source 3 phase A current fifth harmonic
10443	SRC 3 Ia Harm[6]	%	Source 3 phase A current sixth harmonic
10444	SRC 3 Ia Harm[7]	%	Source 3 phase A current seventh harmonic
10445	SRC 3 Ia Harm[8]	%	Source 3 phase A current eighth harmonic
10446	SRC 3 Ia Harm[9]	%	Source 3 phase A current ninth harmonic
10447	SRC 3 Ia Harm[10]	%	Source 3 phase A current tenth harmonic
10448	SRC 3 Ia Harm[11]	%	Source 3 phase A current eleventh harmonic
10449	SRC 3 Ia Harm[12]	%	Source 3 phase A current twelfth harmonic
10450	SRC 3 Ia Harm[13]	%	Source 3 phase A current thirteenth harmonic
10451	SRC 3 Ia Harm[14]	%	Source 3 phase A current fourteenth harmonic
10452	SRC 3 Ia Harm[15]	%	Source 3 phase A current fifteenth harmonic
10453	SRC 3 Ia Harm[16]	%	Source 3 phase A current sixteenth harmonic
10454	SRC 3 Ia Harm[17]	%	Source 3 phase A current seventeenth harmonic
10455	SRC 3 Ia Harm[18]	%	Source 3 phase A current eighteenth harmonic
10456	SRC 3 Ia Harm[19]	%	Source 3 phase A current nineteenth harmonic
10457	SRC 3 Ia Harm[20]	%	Source 3 phase A current twentieth harmonic
10458	SRC 3 Ia Harm[21]	%	Source 3 phase A current twenty-first harmonic
10459	SRC 3 Ia Harm[22]	%	Source 3 phase A current twenty-second harmonic
10460	SRC 3 Ia Harm[23]	%	Source 3 phase A current twenty-third harmonic
10461	SRC 3 Ia Harm[24]	%	Source 3 phase A current twenty-fourth harmonic
10462	SRC 3 Ia Harm[25]	%	Source 3 phase A current twenty-fifth harmonic

A

Decimal address	FlexAnalog name	Units	Description
10471	SRC 3 Ib THD	%	Source 3 phase B current total harmonic distortion
10472	SRC 3 Ib Harm[2]	%	Source 3 phase B current second harmonic
10473	SRC 3 Ib Harm[3]	%	Source 3 phase B current third harmonic
10474	SRC 3 Ib Harm[4]	%	Source 3 phase B current fourth harmonic
10475	SRC 3 Ib Harm[5]	%	Source 3 phase B current fifth harmonic
10476	SRC 3 Ib Harm[6]	%	Source 3 phase B current sixth harmonic
10477	SRC 3 Ib Harm[7]	%	Source 3 phase B current seventh harmonic
10478	SRC 3 Ib Harm[8]	%	Source 3 phase B current eighth harmonic
10479	SRC 3 Ib Harm[9]	%	Source 3 phase B current ninth harmonic
10480	SRC 3 Ib Harm[10]	%	Source 3 phase B current tenth harmonic
10481	SRC 3 Ib Harm[11]	%	Source 3 phase B current eleventh harmonic
10482	SRC 3 Ib Harm[12]	%	Source 3 phase B current twelfth harmonic
10483	SRC 3 Ib Harm[13]	%	Source 3 phase B current thirteenth harmonic
10484	SRC 3 Ib Harm[14]	%	Source 3 phase B current fourteenth harmonic
10485	SRC 3 Ib Harm[15]	%	Source 3 phase B current fifteenth harmonic
10486	SRC 3 Ib Harm[16]	%	Source 3 phase B current sixteenth harmonic
10487	SRC 3 Ib Harm[17]	%	Source 3 phase B current seventeenth harmonic
10488	SRC 3 Ib Harm[18]	%	Source 3 phase B current eighteenth harmonic
10489	SRC 3 Ib Harm[19]	%	Source 3 phase B current nineteenth harmonic
10490	SRC 3 Ib Harm[20]	%	Source 3 phase B current twentieth harmonic
10491	SRC 3 Ib Harm[21]	%	Source 3 phase B current twenty-first harmonic
10492	SRC 3 Ib Harm[22]	%	Source 3 phase B current twenty-second harmonic
10493	SRC 3 Ib Harm[23]	%	Source 3 phase B current twenty-third harmonic
10494	SRC 3 Ib Harm[24]	%	Source 3 phase B current twenty-fourth harmonic
10495	SRC 3 Ib Harm[25]	%	Source 3 phase B current twenty-fifth harmonic
10504	SRC 3 Ic THD	%	Source 3 phase C current total harmonic distortion
10505	SRC 3 Ic Harm[2]	%	Source 3 phase C current second harmonic
10506	SRC 3 Ic Harm[3]	%	Source 3 phase C current third harmonic
10507	SRC 3 Ic Harm[4]	%	Source 3 phase C current fourth harmonic
10508	SRC 3 Ic Harm[5]	%	Source 3 phase C current fifth harmonic
10509	SRC 3 Ic Harm[6]	%	Source 3 phase C current sixth harmonic
10510	SRC 3 Ic Harm[7]	%	Source 3 phase C current seventh harmonic
10511	SRC 3 Ic Harm[8]	%	Source 3 phase C current eighth harmonic
10512	SRC 3 Ic Harm[9]	%	Source 3 phase C current ninth harmonic
10513	SRC 3 Ic Harm[10]	%	Source 3 phase C current tenth harmonic
10514	SRC 3 Ic Harm[11]	%	Source 3 phase C current eleventh harmonic
10515	SRC 3 Ic Harm[12]	%	Source 3 phase C current twelfth harmonic
10516	SRC 3 Ic Harm[13]	%	Source 3 phase C current thirteenth harmonic
10517	SRC 3 Ic Harm[14]	%	Source 3 phase C current fourteenth harmonic
10518	SRC 3 Ic Harm[15]	%	Source 3 phase C current fifteenth harmonic
10519	SRC 3 Ic Harm[16]	%	Source 3 phase C current sixteenth harmonic
10520	SRC 3 Ic Harm[17]	%	Source 3 phase C current seventeenth harmonic
10521	SRC 3 Ic Harm[18]	%	Source 3 phase C current eighteenth harmonic
10522	SRC 3 Ic Harm[19]	%	Source 3 phase C current nineteenth harmonic
10523	SRC 3 Ic Harm[20]	%	Source 3 phase C current twentieth harmonic
10524	SRC 3 Ic Harm[21]	%	Source 3 phase C current twenty-first harmonic

A

Decimal address	FlexAnalog name	Units	Description
10525	SRC 3 Ic Harm[22]	%	Source 3 phase C current twenty-second harmonic
10526	SRC 3 Ic Harm[23]	%	Source 3 phase C current twenty-third harmonic
10527	SRC 3 Ic Harm[24]	%	Source 3 phase C current twenty-fourth harmonic
10528	SRC 3 Ic Harm[25]	%	Source 3 phase C current twenty-fifth harmonic
10537	SRC 4 Ia THD	%	Source 4 phase A current total harmonic distortion
10538	SRC 4 Ia Harm[2]	%	Source 4 phase A current second harmonic
10539	SRC 4 Ia Harm[3]	%	Source 4 phase A current third harmonic
10540	SRC 4 Ia Harm[4]	%	Source 4 phase A current fourth harmonic
10541	SRC 4 Ia Harm[5]	%	Source 4 phase A current fifth harmonic
10542	SRC 4 Ia Harm[6]	%	Source 4 phase A current sixth harmonic
10543	SRC 4 Ia Harm[7]	%	Source 4 phase A current seventh harmonic
10544	SRC 4 Ia Harm[8]	%	Source 4 phase A current eighth harmonic
10545	SRC 4 Ia Harm[9]	%	Source 4 phase A current ninth harmonic
10546	SRC 4 Ia Harm[10]	%	Source 4 phase A current tenth harmonic
10547	SRC 4 Ia Harm[11]	%	Source 4 phase A current eleventh harmonic
10548	SRC 4 Ia Harm[12]	%	Source 4 phase A current twelfth harmonic
10549	SRC 4 Ia Harm[13]	%	Source 4 phase A current thirteenth harmonic
10550	SRC 4 Ia Harm[14]	%	Source 4 phase A current fourteenth harmonic
10551	SRC 4 Ia Harm[15]	%	Source 4 phase A current fifteenth harmonic
10552	SRC 4 Ia Harm[16]	%	Source 4 phase A current sixteenth harmonic
10553	SRC 4 Ia Harm[17]	%	Source 4 phase A current seventeenth harmonic
10554	SRC 4 Ia Harm[18]	%	Source 4 phase A current eighteenth harmonic
10555	SRC 4 Ia Harm[19]	%	Source 4 phase A current nineteenth harmonic
10556	SRC 4 Ia Harm[20]	%	Source 4 phase A current twentieth harmonic
10557	SRC 4 Ia Harm[21]	%	Source 4 phase A current twenty-first harmonic
10558	SRC 4 Ia Harm[22]	%	Source 4 phase A current twenty-second harmonic
10559	SRC 4 Ia Harm[23]	%	Source 4 phase A current twenty-third harmonic
10560	SRC 4 Ia Harm[24]	%	Source 4 phase A current twenty-fourth harmonic
10561	SRC 4 Ia Harm[25]	%	Source 4 phase A current twenty-fifth harmonic
10570	SRC 4 Ib THD	%	Source 4 phase B current total harmonic distortion
10571	SRC 4 Ib Harm[2]	%	Source 4 phase B current second harmonic
10572	SRC 4 Ib Harm[3]	%	Source 4 phase B current third harmonic
10573	SRC 4 Ib Harm[4]	%	Source 4 phase B current fourth harmonic
10574	SRC 4 Ib Harm[5]	%	Source 4 phase B current fifth harmonic
10575	SRC 4 Ib Harm[6]	%	Source 4 phase B current sixth harmonic
10576	SRC 4 Ib Harm[7]	%	Source 4 phase B current seventh harmonic
10577	SRC 4 Ib Harm[8]	%	Source 4 phase B current eighth harmonic
10578	SRC 4 Ib Harm[9]	%	Source 4 phase B current ninth harmonic
10579	SRC 4 Ib Harm[10]	%	Source 4 phase B current tenth harmonic
10580	SRC 4 Ib Harm[11]	%	Source 4 phase B current eleventh harmonic
10581	SRC 4 Ib Harm[12]	%	Source 4 phase B current twelfth harmonic
10582	SRC 4 Ib Harm[13]	%	Source 4 phase B current thirteenth harmonic
10583	SRC 4 Ib Harm[14]	%	Source 4 phase B current fourteenth harmonic
10584	SRC 4 Ib Harm[15]	%	Source 4 phase B current fifteenth harmonic
10585	SRC 4 Ib Harm[16]	%	Source 4 phase B current sixteenth harmonic
10586	SRC 4 Ib Harm[17]	%	Source 4 phase B current seventeenth harmonic

A

Decimal address	FlexAnalog name	Units	Description
10587	SRC 4 Ib Harm[18]	%	Source 4 phase B current eighteenth harmonic
10588	SRC 4 Ib Harm[19]	%	Source 4 phase B current nineteenth harmonic
10589	SRC 4 Ib Harm[20]	%	Source 4 phase B current twentieth harmonic
10590	SRC 4 Ib Harm[21]	%	Source 4 phase B current twenty-first harmonic
10591	SRC 4 Ib Harm[22]	%	Source 4 phase B current twenty-second harmonic
10592	SRC 4 Ib Harm[23]	%	Source 4 phase B current twenty-third harmonic
10593	SRC 4 Ib Harm[24]	%	Source 4 phase B current twenty-fourth harmonic
10594	SRC 4 Ib Harm[25]	%	Source 4 phase B current twenty-fifth harmonic
10603	SRC 4 Ic THD	%	Source 4 phase C current total harmonic distortion
10604	SRC 4 Ic Harm[2]	%	Source 4 phase C current second harmonic
10605	SRC 4 Ic Harm[3]	%	Source 4 phase C current third harmonic
10606	SRC 4 Ic Harm[4]	%	Source 4 phase C current fourth harmonic
10607	SRC 4 Ic Harm[5]	%	Source 4 phase C current fifth harmonic
10608	SRC 4 Ic Harm[6]	%	Source 4 phase C current sixth harmonic
10609	SRC 4 Ic Harm[7]	%	Source 4 phase C current seventh harmonic
10610	SRC 4 Ic Harm[8]	%	Source 4 phase C current eighth harmonic
10611	SRC 4 Ic Harm[9]	%	Source 4 phase C current ninth harmonic
10612	SRC 4 Ic Harm[10]	%	Source 4 phase C current tenth harmonic
10613	SRC 4 Ic Harm[11]	%	Source 4 phase C current eleventh harmonic
10614	SRC 4 Ic Harm[12]	%	Source 4 phase C current twelfth harmonic
10615	SRC 4 Ic Harm[13]	%	Source 4 phase C current thirteenth harmonic
10616	SRC 4 Ic Harm[14]	%	Source 4 phase C current fourteenth harmonic
10617	SRC 4 Ic Harm[15]	%	Source 4 phase C current fifteenth harmonic
10618	SRC 4 Ic Harm[16]	%	Source 4 phase C current sixteenth harmonic
10619	SRC 4 Ic Harm[17]	%	Source 4 phase C current seventeenth harmonic
10620	SRC 4 Ic Harm[18]	%	Source 4 phase C current eighteenth harmonic
10621	SRC 4 Ic Harm[19]	%	Source 4 phase C current nineteenth harmonic
10622	SRC 4 Ic Harm[20]	%	Source 4 phase C current twentieth harmonic
10623	SRC 4 Ic Harm[21]	%	Source 4 phase C current twenty-first harmonic
10624	SRC 4 Ic Harm[22]	%	Source 4 phase C current twenty-second harmonic
10625	SRC 4 Ic Harm[23]	%	Source 4 phase C current twenty-third harmonic
10626	SRC 4 Ic Harm[24]	%	Source 4 phase C current twenty-fourth harmonic
10627	SRC 4 Ic Harm[25]	%	Source 4 phase C current twenty-fifth harmonic
10848	Synchchk 1 Delta V	Volts	Synchrocheck 1 delta voltage
10850	Synchchk 1 Delta Phs	Degrees	Synchrocheck 1 delta phase
10851	Synchchk 1 SSCP DPh	Degrees	Synchrocheck 1 synchscope
10852	Synchchk 1 Delta F	Hz	Synchrocheck 1 delta frequency
10853	Synchchk 1 V1 Mag	Volts	Synchrocheck 1 V1 mag
10855	Synchchk 1 V1 Ang	Degrees	Synchrocheck 1 V1 angle
10856	Synchchk 1 V2 Mag	Volts	Synchrocheck 1 V2 mag
10858	Synchchk 1 V2 Ang	Degrees	Synchrocheck 1 V2 angle
10859	Synchchk 1 V2' Mag	Volts	Synchrocheck 1 V2_mag
10861	Synchchk 1 V2' Ang	Degrees	Synchrocheck 1 V2_angle
10862	Synchchk 1 Delta' Phs	Degrees	Synchrocheck 1 delta_phase
10863	Synchchk 1 SSCP DPh'	Degrees	Synchrocheck 1 _synchscope
10864	Synchchk 2 Delta V	Volts	Synchrocheck 2 delta voltage

Decimal address	FlexAnalog name	Units	Description
10866	Synchchk 2 Delta Phs	Degrees	Synchrocheck 2 delta phase
10867	Synchchk 2 SSCP DPh	Degrees	Synchrocheck 2 synchscope
10868	Synchchk 2 Delta F	Hz	Synchrocheck 2 delta frequency
10869	Synchchk 2 V1 Mag	Volts	Synchrocheck 2 V1 mag
10871	Synchchk 2 V1 Ang	Degrees	Synchrocheck 2 V1 angle
10872	Synchchk 2 V2 Mag	Volts	Synchrocheck 2 V2 mag
10874	Synchchk 2 V2 Ang	Degrees	Synchrocheck 2 V2 angle
10875	Synchchk 2 V2' Mag	Volts	Synchrocheck 2 V2_mag
10877	Synchchk 2 V2' Ang	Degrees	Synchrocheck 2 V2_angle
10878	Synchchk 2 Delta' Phs	Degrees	Synchrocheck 2 delta_phase
10879	Synchchk 2 SSCP DPh'	Degrees	Synchrocheck 2 _synchscope
10880	Synchchk 3 Delta V	Volts	Synchrocheck 3 delta voltage
10882	Synchchk 3 Delta Phs	Degrees	Synchrocheck 3 delta phase
10883	Synchchk 3 SSCP DPh	Degrees	Synchrocheck 3 synchscope
10884	Synchchk 3 Delta F	Volts	Synchrocheck 3 delta frequency
10885	Synchchk 3 V1 Mag	Volts	Synchrocheck 3 V1 mag
10887	Synchchk 3 V1 Ang	Degrees	Synchrocheck 3 V1 angle
10888	Synchchk 3 V2 Mag	Volts	Synchrocheck 3 V2 mag
10890	Synchchk 3 V2 Ang	Degrees	Synchrocheck 3 V2 angle
10891	Synchchk 3 V2' Mag	Volts	Synchrocheck 3 V2_mag
10893	Synchchk 3 V2' Ang	Degrees	Synchrocheck 3 V2_angle
10894	Synchchk 3 Delta' Phs	Degrees	Synchrocheck 3 delta_phase
10895	Synchchk 3 SSCP DPh'	Degrees	Synchrocheck 3 _synchscope
10896	Synchchk 4 Delta V	Volts	Synchrocheck 4 delta voltage
10898	Synchchk 4 Delta Phs	Degrees	Synchrocheck 4 delta phase
10899	Synchchk 4 SSCP DPh	Degrees	Synchrocheck 4 synchscope
10900	Synchchk 4 Delta F	Hz	Synchrocheck 4 delta frequency
10901	Synchchk 4 V1 Mag	Volts	Synchrocheck 4 V1 mag
10903	Synchchk 4 V1 Ang	Degrees	Synchrocheck 4 V1 angle
10904	Synchchk 4 V2 Mag	Volts	Synchrocheck 4 V2 mag
10906	Synchchk 4 V2 Ang	Degrees	Synchrocheck 4 V2 angle
10907	Synchchk 4 V2' Mag	Volts	Synchrocheck 4 V2_mag
10909	Synchchk 4 V2' Ang	Degrees	Synchrocheck 4 V2_angle
10910	Synchchk 4 Delta' Phs	Degrees	Synchrocheck 4 delta_phase
10911	Synchchk 4 SSCP DPh'	Degrees	Synchrocheck 4 _synchscope
10912	Synchchk 5 Delta V	Volts	Synchrocheck 5 delta voltage
10914	Synchchk 5 Delta Phs	Degrees	Synchrocheck 5 delta phase
10915	Synchchk 5 SSCP DPh	Degrees	Synchrocheck 5 synchscope
10916	Synchchk 5 Delta F	Hz	Synchrocheck 5 delta frequency
10917	Synchchk 5 V1 Mag	Volts	Synchrocheck 5 V1 mag
10919	Synchchk 5 V1 Ang	Degrees	Synchrocheck 5 V1 angle
10920	Synchchk 5 V2 Mag	Volts	Synchrocheck 5 V2 mag
10922	Synchchk 5 V2 Ang	Degrees	Synchrocheck 5 V2 angle
10923	Synchchk 5 V2' Mag	Volts	Synchrocheck 5 V2_mag
10925	Synchchk 5 V2' Ang	Degrees	Synchrocheck 5 V2_angle
10926	Synchchk 5 Delta' Phs	Degrees	Synchrocheck 5 delta_phase

A

Decimal address	FlexAnalog name	Units	Description
10927	Synchchk 5 SSCP DPh'	Degrees	Synchrocheck 5 _synchscope
10928	Synchchk 6 Delta V	Volts	Synchrocheck 6 delta voltage
10930	Synchchk 6 Delta Phs	Degrees	Synchrocheck 6 delta phase
10931	Synchchk 6 SSCP DPh	Degrees	Synchrocheck 6 synchscope
10932	Synchchk 6 Delta F	Hz	Synchrocheck 6 delta frequency
10933	Synchchk 6 V1 Mag	Volts	Synchrocheck 6 V1 mag
10935	Synchchk 6 V1 Ang	Degrees	Synchrocheck 6 V1 angle
10936	Synchchk 6 V2 Mag	Volts	Synchrocheck 6 V2 mag
10938	Synchchk 6 V2 Ang	Degrees	Synchrocheck 6 V2 angle
10939	Synchchk 6 V2' Mag	Volts	Synchrocheck 6 V2_mag
10941	Synchchk 6 V2' Ang	Degrees	Synchrocheck 6 V2_angle
10942	Synchchk 6 Delta' Phs	Degrees	Synchrocheck 6 delta_phase
10943	Synchchk 6 SSCP DPh'	Degrees	Synchrocheck 6 _synchscope
10944	Synchchk 7 Delta V	Volts	Synchrocheck 7 delta voltage
10946	Synchchk 7 Delta Phs	Degrees	Synchrocheck 7 delta phase
10947	Synchchk 7 SSCP DPh	Degrees	Synchrocheck 7 synchscope
10948	Synchchk 7 Delta F	Hz	Synchrocheck 7 delta frequency
10949	Synchchk 7 V1 Mag	Volts	Synchrocheck 7 V1 mag
10951	Synchchk 7 V1 Ang	Degrees	Synchrocheck 7 V1 angle
10952	Synchchk 7 V2 Mag	Volts	Synchrocheck 7 V2 mag
10954	Synchchk 7 V2 Ang	Degrees	Synchrocheck 7 V2 angle
10955	Synchchk 7 V2' Mag	Volts	Synchrocheck 7 V2_mag
10957	Synchchk 7 V2' Ang	Degrees	Synchrocheck 7 V2_angle
10958	Synchchk 7 Delta' Phs	Degrees	Synchrocheck 7 delta_phase
10959	Synchchk 7 SSCP DPh'	Degrees	Synchrocheck 7 _synchscope
10960	Synchchk 8 Delta V	Volts	Synchrocheck 8 delta voltage
10962	Synchchk 8 Delta Phs	Degrees	Synchrocheck 8 delta phase
10963	Synchchk 8 SSCP DPh	Degrees	Synchrocheck 8 synchscope
10964	Synchchk 8 Delta F	Hz	Synchrocheck 8 delta frequency
10965	Synchchk 8 V1 Mag	Volts	Synchrocheck 8 V1 mag
10967	Synchchk 8 V1 Ang	Degrees	Synchrocheck 8 V1 angle
10968	Synchchk 8 V2 Mag	Volts	Synchrocheck 8 V2 mag
10970	Synchchk 8 V2 Ang	Degrees	Synchrocheck 8 V2 angle
10971	Synchchk 8 V2' Mag	Volts	Synchrocheck 8 V2_mag
10973	Synchchk 8 V2' Ang	Degrees	Synchrocheck 8 V2_angle
10974	Synchchk 8 Delta' Phs	Degrees	Synchrocheck 8 delta_phase
10975	Synchchk 8 SSCP DPh'	Degrees	Synchrocheck 8 _synchscope
10976	Synchchk 9 Delta V	Volts	Synchrocheck 9 delta voltage
10978	Synchchk 9 Delta Phs	Degrees	Synchrocheck 9 delta phase
10979	Synchchk 9 SSCP DPh	Degrees	Synchrocheck 9 synchscope
10980	Synchchk 9 Delta F	Hz	Synchrocheck 9 delta frequency
10981	Synchchk 9 V1 Mag	Volts	Synchrocheck 9 V1 mag
10983	Synchchk 9 V1 Ang	Degrees	Synchrocheck 9 V1 angle
10984	Synchchk 9 V2 Mag	Volts	Synchrocheck 9 V2 mag
10986	Synchchk 9 V2 Ang	Degrees	Synchrocheck 9 V2 angle
10987	Synchchk 9 V2' Mag	Volts	Synchrocheck 9 V2_mag

Decimal address	FlexAnalog name	Units	Description
10989	Synchchk 9 V2' Ang	Degrees	Synchrocheck 9 V2_angle
10990	Synchchk 9 Delta' Phs	Degrees	Synchrocheck 9 delta_phase
10991	Synchchk 9 SSCP DPh'	Degrees	Synchrocheck 9 _synchscope
10992	Synchchk 10Delta V	Volts	Synchrocheck 10 delta voltage
10994	Synchchk 10Delta Phs	Degrees	Synchrocheck 10 delta phase
10995	Synchchk 10SSCP DPh	Degrees	Synchrocheck 10 synchscope
10996	Synchchk 10Delta F	Hz	Synchrocheck 10 delta frequency
10997	Synchchk 10V1 Mag	Volts	Synchrocheck 10 V1 mag
10999	Synchchk 10V1 Ang	Degrees	Synchrocheck 10 V1 angle
11000	Synchchk 10V2 Mag	Volts	Synchrocheck 10 V2 mag
11002	Synchchk 10V2 Ang	Degrees	Synchrocheck 10 V2 angle
11003	Synchchk 10V2' Mag	Volts	Synchrocheck 10 V2_mag
11005	Synchchk 10V2' Ang	Degrees	Synchrocheck 10 V2_angle
11006	Synchchk 10Delta' Phs	Degrees	Synchrocheck 10 delta_phase
11007	Synchchk 10SSCP DPh'	Degrees	Synchrocheck 10 _synchscope
12032	Brk 1 Acc Arc Amp A	kA2-cyc	Breaker 1 Acc arcing amp phase A
12034	Brk 1 Acc Arc Amp B	kA2-cyc	Breaker 1 Acc arcing amp phase B
12036	Brk 1 Acc Arc Amp C	kA2-cyc	Breaker 1 Acc arcing amp phase C
12038	Brk 1 Op Time A	ms	Breaker 1 operating time phase A
12039	Brk 1 Op Time B	ms	Breaker 1 operating time phase B
12040	Brk 1 Op Time C	ms	Breaker 1 operating time phase C
12041	Brk 1 Op Time	ms	Breaker 1 operating time
12042	Brk 1 Arc Amp A	kA2-cyc	Breaker 1 arcing amp phase A
12044	Brk 1 Arc Amp B	kA2-cyc	Breaker 1 arcing amp phase B
12046	Brk 1 Arc Amp C	kA2-cyc	Breaker 1 arcing amp phase C
12048	Brk 1 Amp Max A	kA	Breaker 1 amp max phase A
12050	Brk 1 Amp Max B	kA	Breaker 1 amp max phase B
12052	Brk 1 Amp Max C	kA	Breaker 1 amp max phase C
12054	Brk 2 Acc Arc Amp A	kA2-cyc	Breaker 2 Acc arcing amp phase A
12056	Brk 2 Acc Arc Amp B	kA2-cyc	Breaker 2 Acc arcing amp phase B
12058	Brk 2 Acc Arc Amp C	kA2-cyc	Breaker 2 Acc arcing amp phase C
12060	Brk 2 Op Time A	ms	Breaker 2 operating time phase A
12061	Brk 2 Op Time B	ms	Breaker 2 operating time phase B
12062	Brk 2 Op Time C	ms	Breaker 2 operating time phase C
12063	Brk 2 Op Time	ms	Breaker 2 operating time
12064	Brk 2 Arc Amp A	kA2-cyc	Breaker 2 arcing amp phase A
12066	Brk 2 Arc Amp B	kA2-cyc	Breaker 2 arcing amp phase B
12068	Brk 2 Arc Amp C	kA2-cyc	Breaker 2 arcing amp phase C
12070	Brk 2 Amp Max A	kA	Breaker 2 amp max phase A
12072	Brk 2 Amp Max B	kA	Breaker 2 amp max phase B
12074	Brk 2 Amp Max C	kA	Breaker 2 amp max phase C
12306	Oscill Num Triggers	---	Oscillography number of triggers
13504	DCmA Ip 1	mA	DCmA input 1 actual value
13506	DCmA Ip 2	mA	DCmA input 2 actual value
13508	DCmA Ip 3	mA	DCmA input 3 actual value
13510	DCmA Ip 4	mA	DCmA input 4 actual value

A

Decimal address	FlexAnalog name	Units	Description
13512	DCmA Ip 5	mA	DCmA input 5 actual value
13514	DCmA Ip 6	mA	DCmA input 6 actual value
13516	DCmA Ip 7	mA	DCmA input 7 actual value
13518	DCmA Ip 8	mA	DCmA input 8 actual value
13520	DCmA Ip 9	mA	DCmA input 9 actual value
13522	DCmA Ip 10	mA	DCmA input 10 actual value
13524	DCmA Ip 11	mA	DCmA input 11 actual value
13526	DCmA Ip 12	mA	DCmA input 12 actual value
13528	DCmA Ip 13	mA	DCmA input 13 actual value
13530	DCmA Ip 14	mA	DCmA input 14 actual value
13532	DCmA Ip 15	mA	DCmA input 15 actual value
13534	DCmA Ip 16	mA	DCmA input 16 actual value
13536	DCmA Ip 17	mA	DCmA input 17 actual value
13538	DCmA Ip 18	mA	DCmA input 18 actual value
13540	DCmA Ip 19	mA	DCmA input 19 actual value
13542	DCmA Ip 20	mA	DCmA input 20 actual value
13544	DCmA Ip 21	mA	DCmA input 21 actual value
13546	DCmA Ip 22	mA	DCmA input 22 actual value
13548	DCmA Ip 23	mA	DCmA input 23 actual value
13550	DCmA Ip 24	mA	DCmA input 24 actual value
13552	RTD Ip 1	---	RTD input 1 actual value
13553	RTD Ip 2	---	RTD input 2 actual value
13554	RTD Ip 3	---	RTD input 3 actual value
13555	RTD Ip 4	---	RTD input 4 actual value
13556	RTD Ip 5	---	RTD input 5 actual value
13557	RTD Ip 6	---	RTD input 6 actual value
13558	RTD Ip 7	---	RTD input 7 actual value
13559	RTD Ip 8	---	RTD input 8 actual value
13560	RTD Ip 9	---	RTD input 9 actual value
13561	RTD Ip 10	---	RTD input 10 actual value
13562	RTD Ip 11	---	RTD input 11 actual value
13563	RTD Ip 12	---	RTD input 12 actual value
13564	RTD Ip 13	---	RTD input 13 actual value
13565	RTD Ip 14	---	RTD input 14 actual value
13566	RTD Ip 15	---	RTD input 15 actual value
13567	RTD Ip 16	---	RTD input 16 actual value
13568	RTD Ip 17	---	RTD input 17 actual value
13569	RTD Ip 18	---	RTD input 18 actual value
13570	RTD Ip 19	---	RTD input 19 actual value
13571	RTD Ip 20	---	RTD input 20 actual value
13572	RTD Ip 21	---	RTD input 21 actual value
13573	RTD Ip 22	---	RTD input 22 actual value
13574	RTD Ip 23	---	RTD input 23 actual value
13575	RTD Ip 24	---	RTD input 24 actual value
13576	RTD Ip 25	---	RTD input 25 actual value
13577	RTD Ip 26	---	RTD input 26 actual value

A

Decimal address	FlexAnalog name	Units	Description
13578	RTD Ip 27	---	RTD input 27 actual value
13579	RTD Ip 28	---	RTD input 28 actual value
13580	RTD Ip 29	---	RTD input 29 actual value
13581	RTD Ip 30	---	RTD input 30 actual value
13582	RTD Ip 31	---	RTD input 31 actual value
13583	RTD Ip 32	---	RTD input 32 actual value
13584	RTD Ip 33	---	RTD input 33 actual value
13585	RTD Ip 34	---	RTD input 34 actual value
13586	RTD Ip 35	---	RTD input 35 actual value
13587	RTD Ip 36	---	RTD input 36 actual value
13588	RTD Ip 37	---	RTD input 37 actual value
13589	RTD Ip 38	---	RTD input 38 actual value
13590	RTD Ip 39	---	RTD input 39 actual value
13591	RTD Ip 40	---	RTD input 40 actual value
13592	RTD Ip 41	---	RTD input 41 actual value
13593	RTD Ip 42	---	RTD input 42 actual value
13594	RTD Ip 43	---	RTD input 43 actual value
13595	RTD Ip 44	---	RTD input 44 actual value
13596	RTD Ip 45	---	RTD input 45 actual value
13597	RTD Ip 46	---	RTD input 46 actual value
13598	RTD Ip 47	---	RTD input 47 actual value
13599	RTD Ip 48	---	RTD input 48 actual value
13600	Ohm Inputs 1 Value	Ohms	Ohm inputs 1 value
13601	Ohm Inputs 2 Value	Ohms	Ohm inputs 2 value
14189	PTP–IRIG-B Delta	ns	PTP time minus IRIG-B time
24432	Communications Group	---	Groups communications group
24447	Active Setting Group	---	Current setting group
32448	Dist Zab Mag	Ohms	Distance Zab magnitude
32449	Dist Zab Angle	Degrees	Distance Zab angle
32450	Dist Zbc Mag	Ohms	Distance Zbc magnitude
32451	Dist Zbc Angle	Degrees	Distance Zbc angle
32452	Dist Zca Mag	Ohms	Distance Zca magnitude
32453	Dist Zca Angle	Degrees	Distance Zca angle
32454	Dist Zag Mag	Ohms	Distance Zag magnitude
32455	Dist Zag Angle	Degrees	Distance Zag angle
32456	Dist Zbg Mag	Ohms	Distance Zbg magnitude
32457	Dist Zbg Angle	Degrees	Distance Zbg angle
32458	Dist Zcg Mag	Ohms	Distance Zcg magnitude
32459	Dist Zcg Angle	Degrees	Distance Zcg angle
32768	Tracking Frequency	Hz	Terminal tracking frequency
39168	FlexElement 1 Value	---	FlexElement 1 actual value
39170	FlexElement 2 Value	---	FlexElement 2 actual value
39172	FlexElement 3 Value	---	FlexElement 3 actual value
39174	FlexElement 4 Value	---	FlexElement 4 actual value
39176	FlexElement 5 Value	---	FlexElement 5 actual value
39178	FlexElement 6 Value	---	FlexElement 6 actual value

A

Decimal address	FlexAnalog name	Units	Description
39180	FlexElement 7 Value	---	FlexElement 7 actual value
39182	FlexElement 8 Value	---	FlexElement 8 actual value
41138	V0 3rd Harmonic 1	Volts	VTFF 1 V0 3rd Harmonic
41140	V0 3rd Harmonic 2	Volts	VTFF 2 V0 3rd Harmonic
41142	V0 3rd Harmonic 3	Volts	VTFF 3 V0 3rd Harmonic
41144	V0 3rd Harmonic 4	Volts	VTFF 4 V0 3rd Harmonic
42400	Volts Per Hertz 1	pu	Volts per hertz 1 actual value
42401	Volts Per Hertz 2	pu	Volts per hertz 2 actual value
45584	RxGOOSE Analog 1	---	RxGOOSE analog input 1
45586	RxGOOSE Analog 2	---	RxGOOSE analog input 2
45588	RxGOOSE Analog 3	---	RxGOOSE analog input 3
45590	RxGOOSE Analog 4	---	RxGOOSE analog input 4
45592	RxGOOSE Analog 5	---	RxGOOSE analog input 5
45594	RxGOOSE Analog 6	---	RxGOOSE analog input 6
45596	RxGOOSE Analog 7	---	RxGOOSE analog input 7
45598	RxGOOSE Analog 8	---	RxGOOSE analog input 8
45600	RxGOOSE Analog 9	---	RxGOOSE analog input 9
45602	RxGOOSE Analog 10	---	RxGOOSE analog input 10
45604	RxGOOSE Analog 11	---	RxGOOSE analog input 11
45606	RxGOOSE Analog 12	---	RxGOOSE analog input 12
45608	RxGOOSE Analog 13	---	RxGOOSE analog input 13
45610	RxGOOSE Analog 14	---	RxGOOSE analog input 14
45612	RxGOOSE Analog 15	---	RxGOOSE analog input 15
45614	RxGOOSE Analog 16	---	RxGOOSE analog input 16
45616	RxGOOSE Analog 17	---	RxGOOSE analog input 17
45618	RxGOOSE Analog 18	---	RxGOOSE analog input 18
45620	RxGOOSE Analog 19	---	RxGOOSE analog input 19
45622	RxGOOSE Analog 20	---	RxGOOSE analog input 20
45624	RxGOOSE Analog 21	---	RxGOOSE analog input 21
45626	RxGOOSE Analog 22	---	RxGOOSE analog input 22
45628	RxGOOSE Analog 23	---	RxGOOSE analog input 23
45630	RxGOOSE Analog 24	---	RxGOOSE analog input 24
45632	RxGOOSE Analog 25	---	RxGOOSE analog input 25
45634	RxGOOSE Analog 26	---	RxGOOSE analog input 26
45636	RxGOOSE Analog 27	---	RxGOOSE analog input 27
45638	RxGOOSE Analog 28	---	RxGOOSE analog input 28
45640	RxGOOSE Analog 29	---	RxGOOSE analog input 29
45642	RxGOOSE Analog 30	---	RxGOOSE analog input 30
45644	RxGOOSE Analog 31	---	RxGOOSE analog input 31
45646	RxGOOSE Analog 32	---	RxGOOSE analog input 32
61439	PMU Num Triggers	---	Phasor measurement unit recording number of triggers

L90 Line Current Differential System

Appendix B: RADIUS server configuration

This appendix outlines how to set up a RADIUS server for user authentication.

B.1 RADIUS server configuration

The following procedure is an example of how to set up a simple RADIUS server. You install the RADIUS server software on a separate computer. In this example, we use FreeRADIUS third-party software.

1. Download and install FreeRADIUS from www.freeradius.org as the RADIUS server. This is a Windows 32-bit installation that is known to work. If you try another third-party tool and it does not work, use the FreeRADIUS software.
2. Open the radiusd.conf file in the <Path_to_Radius>\etc\raddb folder, locate the "bind_address" field, and enter your RADIUS server IP address. An example is

   ```
   bind_address = 10.14.61.122
   ```

   Text editor software that supports direct editing and saving of UNIX text encodings and line breaks, such as EditPad Lite, is needed for this editing.
3. In the users.conf file in the <Path_to_Radius>\etc\raddb folder, add the following text to configure a user "Tester" with an Administrator role.

   ```
   Tester              User-Password == "TesterPw1#"
                       GE-UR-Role = Administrator
   ```
4. In the clients.conf file in the <Path_to_Radius>\etc\raddb folder, add the following text to define the UR as a RADIUS client, where in this example the client IP address is 10.14.61.132, the shared secret specified here is also configured on the UR device for successful authentication, and the shortname is a short, optional alias that can be used in place of the IP address.

   ```
   client 10.14.61.132 {
   secret = Testing!123
   shortname = ur1-test
   }
   ```

   Alternatively, you may specify one secret for a network of clients, where in the example below the clients are all within the 10.14.61.0/24 subnet and the shared secret specified here is also configured on all the UR devices in the subnet for successful authentication.

   ```
   client 10.14.61.0/24 {
   secret = Testing!123
   shortname = net1-test
   }
   ```
5. In the <Path_to_Radius>\etc\raddb folder, create a file called dictionary.ge and add the following content.

B

```
# ##########################################################
#  GE VSAs
##########################################################

VENDOR                          GE              2910

# Management authorization
BEGIN-VENDOR                    GE

# Role ID
ATTRIBUTE                       GE-UR-Role      1           integer

# GE-UR-ROLE values
VALUE GE-UR-Role                Administrator   1
VALUE GE-UR-Role                Supervisor      2
VALUE GE-UR-Role                Engineer        3
VALUE GE-UR-Role                Operator        4
VALUE GE-UR-Role                Observer        5

END-VENDOR                      GE
##############################################################
```

6. In the dictionary file in the <Path_to_Radius>\etc\raddb folder, add the following line.

   ```
   $INCLUDE dictionary.ge
   ```

   For example, the file can look like the following:

   ```
   $INCLUDE ../share/freeradius/dictionary
   $INCLUDE dictionary.ge
   ```

7. For the first start, run the RADIUS server in debug mode to ensure that there are no compiling errors.

   ```
   <Path_to_Radius>/start_radiusd_debug.bat
   ```

8. Set up the RADIUS parameters on the UR as follows.

   8.1. If logging in, select **Device** for the **Authentication Type**, and use Administrator for the **User Name**. The default password is "ChangeMe1#".

   8.2. Access **Settings > Product Setup > Security**. Configure the IP address (10.14.61.122 in this example) and ports (default values in this example) for the RADIUS server. Leave the GE vendor ID field at the default of 2910. Update the RADIUS shared secret (Testing!123 in this example) as specified in the clients.conf file. Restart the relay for the IP address and port changes to take effect.

9. Verify operation. Log in to the UR software as follows. In the login window, select **Server** as the **Authentication Type**, enter the user name entered (for example user name Tester and password "TesterPw1#"). Check that the RADIUS server log file shows the access with an "Access-Accept" entry.

L90 Line Current Differential System

Appendix C: Command line interface

This appendix outlines command line access to the software.

C.1 Command line interface

SetupCLI is a command line interface to communicate with the EnerVista UR Setup software. Commands can be sent from a DOS prompt or a Windows batch file.

The interface is installed with the EnerVista software. Its default location is similar to C:\Program Files\EnerVista\Tools\SetupCLI

The EnerVista software needs to be installed on a computer to run the command line interface. The command line interface does not provide a remote connection to a computer running the EnerVista software.

Items to note are as follows:

- Works with EnerVista UR Setup version 6.10 and later
- Available in English only
- The graphical user interface of the software is not available concurrently with the command line interface
- It does not support concurrent commands
- It has limited functionality with CyberSentry
- It does not interface with UR Engineer
- It does not work when EnerVista UR Setup security is enabled, meaning when login is required

Command syntax is as follows:

- Options enclosed in [ ] are optional
- Values enclosed in < > are replaced with your own values
- <Application> is replaced with the EnerVista software to receive the command. Use "URPC" for EnerVista UR Setup.
- <device> is the UR device name, as displayed in the **Device Name** field of the Device Setup window and listed in the Online Window. Use quotes with spaces, such as "B30 Belfort".
- "-s" can be used with any command to suppress error messages
- All commands, their return codes, and error description are logged in the file C:\ProgramData\EnerVista\Tools\SetupCLI\SetupCLI.log
- When the Supervisor account is enabled, the 'Lock Relay' setting must first be changed to No before the putsettings, inservice, or reboot command can be used. This setting cannot be changed using the command line interface.
- Use quotes ("") to enclose any parameter containing a space

- Commands, options, and parameters are case sensitive
- All commands have a return code of 0-255. 0 indicates success and 1-255 indicate different errors
- If SetupCLI is automated (in a batch file), make sure that only a single batch is running at a time. SetupCLI does not support concurrent operations.

To run the command line interface:

1. In Windows, click the **Start** button, enter **cmd**, and press the **Enter** key. After prompting for permission, the Windows command window opens.
2. Enter `SetupCLI` followed by the action to execute. An example of use is to enter "SetupCLI -h" to display help, specifically the commands and explanations outlined here.

C

Figure C-1: Command line interface run in the command window

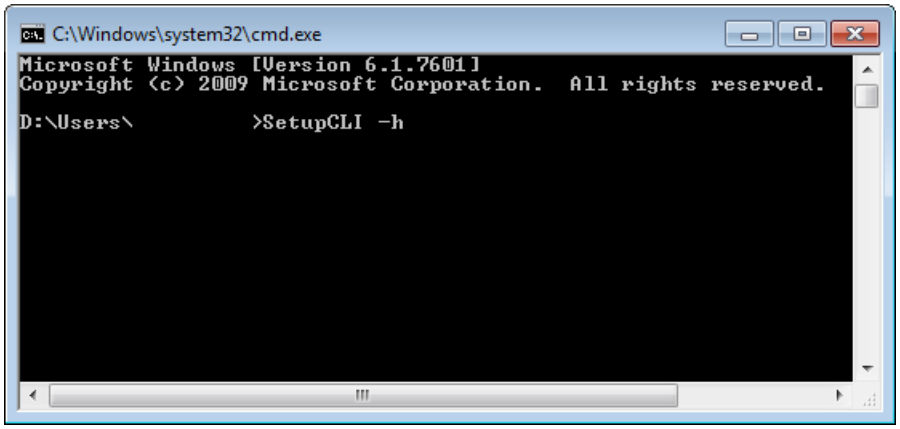

SetupCLI -h

Display help.

It displays the content outline here.

SetupCLI <Application> start [-c] [-s]

Launch application with name <Application>.

To start in client mode, which is the graphical user interface, include option '-c'. Before use, the software must be idle without any windows open. Any activity or open windows can cause unexpected behavior. When in client mode, do not use Launchpad's Site Management feature.

To suppress errors, include option -s.

Example: SetupCLI URPC start -c

SetupCLI <Application> exit [-s]

Exit application with name <Application>.

Example: SetupCLI URPC exit

SetupCLI <Application> login -d <device> [-A <authentication type>] [-a <account>] -w <password> [-s]

Authenticate with device <device> using password <password>.

For non-CyberSentry devices — Set <authentication type> to "traditional". Note that <authentication type> defaults to "traditional" if not specified. Set <account> to "COMMANDS" or "SETTINGS". If not specified, the SETTINGS account is used.

Example: SetupCLI URPC login -d "C30 Melbourne" -A traditional -a SETTINGS -w 1password1

Example of a batch file that checks for an error (this batch file uses standard batch file operations to check the return code (ERRORLEVEL) and jump to an error handler):

```
SetupCLI URPC start
SetupCLI URPC login -d demoDevice -a SETTINGS -w WrongPassword -A traditional
IF NOT ERRORLEVEL 0 GOTO FAILED
SetupCLI URPC putsettings -d demoDevice  -f "example file.urs"
SetupCLI URPC inservice -d demoDevice
SetupCLI URPC reboot -d demoDevice
SetupCLI URPC exit
exit

:FAILED
echo Please try again
exit
```

For CyberSentry devices with local authentication — Set <authentication type> to "local" . Set <account> to "Supervisor", "Administrator", "Engineer", "Operator", or "Observer".

For CyberSentry devices with RADIUS authentication — Set <authentication type> to "radius". Set <account> to the user's account on the RADIUS server.

SetupCLI <Application> logout -d <device> [-s]

Log out of device <device>.

Example: SetupCLI URPC logout -d C30

SetupCLI <Application> getsettings -d <device> -f <File> [-s]

Read settings from device <device> and save them to the .urs file <File>. The <File> must not already exist. The default path to the output file is C:\Users\Public\Public Documents\GE Power Management\URPC\Data

Example: SetupCLI URPC getsettings -d C30 -f "C30 Markham.urs"

Example of a batch file to retrieve a settings file:

```
SetupCLI URPC start
SetupCLI URPC getsettings -d demoDevice -f C:\example.urs
SetupCLI URPC exit
```

Example of a batch file to retrieve a settings file from a relay that requires RADIUS authentication:

```
SetupCLI URPC start
SetupCLI URPC login -d demoDevice -a %1 -w %2 -A radius
SetupCLI URPC getsettings -d demoDevice -f "example file.urs"
SetupCLI URPC logout -d demoDevice
SetupCLI URPC exit
```

Although a user name and password could have been entered in this batch file, it would have created a security risk. Batch files allow you to pass in runtime parameters and refer to them in your script as %1, %2, and so on. For example, if this file is called example.bat, one calls it as follows: "example.bat MyUserName MyPassword"

SetupCLI <Application> putsettings -d <device> -f <File> [-s]

Write the settings file <File> to the device <device>.

For CyberSentry devices, putsettings is only supported for users with the "Administrator" role.

Example: SetupCLI URPC putsettings -d C30 -f "C30 Markham.urs"

C

SetupCLI <Application> compare -f <File1> -r <File2> -o <OutputFile> [-s]

Compare settings files <File1> and <File2>, and save output to <OutputFile>.

Example: SetupCLI URPC compare -f may.urs -r september.urs -o compared.txt

Batch file example that retrieves a settings file, compares it with an existing settings file, and opens the resulting comparison file:

```
SetupCLI URPC start
SetupCLI URPC getsettings -d demoDevice  -f devicefile.urs
SetupCLI URPC compare -f existingfile.urs -r devicefile.urs -o output.txt
```

The output is similar to the following:

```
Comparing settings file aaa.urs : C:\Users\Public\Public Documents\GE Power Management\URPC\Data\ with bbb.urs
: C:\Users\Public\Public Documents\GE Power Management\URPC\Data\

 #    Setting Name                (Group,Module,Item)   Value

 1 + Default Message Timeout          (1,1,1) = 299 s
 2 - Default Message Timeout          (1,1,1) = 300 s
 3 + Flash Message Time               (1,1,1) = 0.9 s
 4 - Flash Message Time               (1,1,1) = 1.0 s
```

SetupCLI <Application> inservice -d <device> [-n] [-s]

Put the device in service. Include option -n to take the device out of service.

Example: SetupCLI URPC inservice -d C30

SetupCLI <Application> reboot -d <device> [-s]

Reboot the relay <device>. This is necessary after changing IEC 61850 settings and aggregator source settings.

Example: SetupCLI URPC reboot -d "C30_Instanbul"

SetupCLI <Application> adddevice -I <IP Address> -S <Slave Address> -P <Modbus Port>

Connect to a device using its IP address, slave address, and Modbus port. Show the device in the EnerVista interface under the SetupCLI Site as DEV@SETUP_CLI.

EnerVista UR Setup 7.30 or higher supports this command.

Figure C-2: Device added using IP address

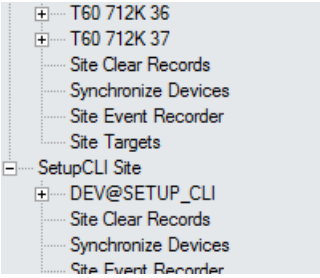

The device is named as DEV@SETUP_CLI, which is used as the device name required by the <device> parameter of other SetupCLI commands.

The device name DEV@SETUP_CLI is always assigned to the device that is connected most recently by performing 'adddevice' command. It means that the Application only keeps up to one device named as DEV@SETUP_CLI, the 'adddevice' command disconnects/deletes the device DEV@SETUP _CLI that was connected previously by performing 'adddevice' command.

The device name DEV@SETUP_CLI is never used to configure/connect to a device through the graphical user interface.

Example of a batch file using a device IP address to retrieve its settings file:

```
SetupCLI URPC start
SetupCLI URPC adddevice -I 192.168.140.113 -S 113 -P 502
SetupCLI URPC getsettings -d DEV@SETUP_CLI -f C:\example.urs
SetupCLI URPC exit
```

After connecting the device using IP address, the device name DEV@SETUP_CLI is used to identify this device in 'getsettings' command.

Example of a batch file using a device IP address to retrieve a settings file when RADIUS authentication is required:

```
SetupCLI URPC start
SetupCLI URPC adddevice -I 192.168.140.113 -S 113 -P 502
SetupCLI URPC login -d DEV@SETUP_CLI -a %1 -w %2 -A radius
SetupCLI URPC getsettings -d DEV@SETUP_CLI -f "example file.urs"
SetupCLI URPC logout -d DEV@SETUP_CLI
SetupCLI URPC exit
```

DEV@SETUP_CLI has to be used as the device name in the commands followed by the 'adddevice' command.

C

L90 Line Current Differential System

Appendix D: Miscellaneous

This chapter provides the warranty and revision history.

D.1 Warranty

For products shipped as of 1 October 2013, GE Grid Solutions warrants most of its GE manufactured products for 10 years. For warranty details including any limitations and disclaimers, see the Terms and Conditions at

http://www.gegridsolutions.com/multilin/warranty.htm

For products shipped before 1 October 2013, the standard 24-month warranty applies.

D.2 Revision history

The tables outline the releases and revision history of this document.

Table D-1: Revision history (English)

Manual P/N	L90 revision	Release date	ECO
1601-0081-A1	1.0x	04 November 1998	N/A
1601-0081-A2	1.0x	09 December 1998	URL-039
1601-0081-A3	1.5x	25 June 1999	URL-051
1601-0081-A4	1.5x	10 August 1999	URL-055
1601-0081-A5	1.5x	02 September 1999	URL-057
1601-0081-A6	2.0x	17 December 1999	URL-063
1601-0081-A7	2.0x	26 January 2000	URL-064
1601-0081-A7-2	2.0x	07 April 2000	URL-068
1601-0081-A8	2.2x	12 May 2000	URL-067
1601-0081-A9	2.2x	14 June 2000	URL-070
1601-0081-A9-2	2.2x	21 June 2000	URL-071
1601-0081-A9-2a	2.2x	28 June 2000	URL-071a
1601-0081-B1	2.4x	08 September 2000	URL-075
1601-0081-B2	2.4x	03 November 2000	URL-077
1601-0081-B3	2.6x	08 March 2001	URL-079

Manual P/N	L90 revision	Release date	ECO
1601-0081-B4	2.8x	24 September 2001	URL-088
1601-0081-B5	2.9x	03 December 2001	URL-090
1601-0081-B6	2.6x	27 February 2004	URX-120
1601-0081-C1	3.0x	02 July 2002	URL-092
1601-0081-C2	3.1x	30 August 2002	URL-098
1601-0081-C3	3.0x	18 November 2002	URL-101
1601-0081-C4	3.1x	18 November 2002	URL-102
1601-0081-C5	3.0x	11 February 2003	URL-105
1601-0081-C6	3.1x	11 February 2003	URL-106
1601-0081-D1	3.2x	11 February 2003	URL-108
1601-0081-D2	3.2x	02 June 2003	URX-084
1601-0081-E1	3.3x	01 May 2003	URX-080
1601-0081-E2	3.3x	29 May 2003	URX-083
1601-0081-F1	3.4x	10 December 2003	URX-111
1601-0081-F2	3.4x	09 February 2004	URX-115
1601-0081-G1	4.0x	23 March 2004	URX-123
1601-0081-G2	4.0x	17 May 2004	URX-136
1601-0081-H1	4.2x	30 June 2004	URX-145
1601-0081-H2	4.2x	16 July 2004	URX-151
1601-0081-J1	4.4x	15 September 2004	URX-156
1601-0081-K1	4.6x	15 February 2005	URX-176
1601-0081-L1	4.8x	05 August 2005	URX-202
1601-0081-M1	4.9x	15 December 2005	URX-208
1601-0081-M2	4.9x	27 February 2006	URX-214
1601-0081-N1	5.0x	31 March 2006	URX-217
1601-0081-N2	5.0x	26 May 2006	URX-220
1601-0081-P1	5.2x	23 October 2006	URX-230
1601-0081-P2	5.2x	24 January 2007	URX-232
1601-0081-R1	5.4x	26 June 2007	URX-242
1601-0081-R2	5.4x	31 August 2007	URX-246
1601-0081-R3	5.4x	17 October 2007	URX-251
1601-0081-S1	5.5x	7 December 2007	URX-253
1601-0081-S2	5.5x	22 February 2008	URX-258
1601-0081-S3	5.5x	12 March 2008	URX-260
1601-0081-T1	5.6x	27 June 2008	08-0390
1601-0081-U1	5.7x	29 May 2009	09-0938
1601-0081-U2	5.7x	30 September 2009	09-1165
1601-0081-V1	5.8x	29 May 2010	09-1457
1601-0081-V2	5.8x	04 January 2011	11-2237
1601-0081-W1	5.9x	12 January 2011	11-2227
1601-0081-X1	6.0x	21 December 2011	11-2840
1601-0081-X2	6.0x	5 April 2012	12-3254
1601-0081-Y1	7.0x	30 September 2012	12-3529
1601-0081-Y2	7.0x	11 November 2012	12-3601
1601-0081-Z1	7.1x	30 March 2013	13-0126
1601-0081-AA1	7.2x	1 August 2013	13-0401
1601-0081-AB1	7.3x	7 November 2014	14-1408

Manual P/N	L90 revision	Release date	ECO
1601-0081-AB2	7.3x	1 September 2015	15-2215
1601-0081-AC1	7.40x	8 December 2016	16-3319
1601-0081-AE1	7.41x	31 January 2017	17-3427
1601-0081-AE3	7.4x	28 April 2017	17-3561
1601-0081-AF1	7.6x	30 June 2017	17-3779
1601-0081-AF2	7.6x	31 October 2017	17-3935
1601-0081-AF3	7.6x	23 August 2021	21-6559

Table D-2: Major changes for L90 manual version AF3 (English)

Page	Description
---	General revision
2-	Updated Dropout Level specification for several elements, changing percent range to a number
2-	Deleted end-of-manufacturing modules 74, 75, 7E, 7L from order code tables
2-13	Updated order codes from SH / SL to RH / RL for the redundant power supply for horizontal units. The power supply modules were upgraded in 2014 to SH and SL, but the order codes when purchasing a UR remain as RH and RL so that customers do not need to change order codes. The order codes for the power supply replacement modules are correct as SH and SL.
2-13	Added order codes for Inter-relay communication modules in U column for horizontal unit
3-	Updated Typical Wiring Diagram at CPU module, CPU Module Communications Wiring figure, and Options for IRIG-B Connection figure
7-14	Added Instantaneous Protection Elements Trip Security section to self-tests
B-	Updated RADIUS chapter

Table D-3: Major changes for L90 manual version AF2 (English)

Page	Description
---	General revision
---	Added type W CPU module to order codes in chapter 2, installation chapter 3, Replace Front Panel section in chapter 10
---	Added Japanese and Polish languages and modules 6W and 6X to order codes in chapter 2. Module 6W allows 30 contact inputs, and Module 6X allows 18 outputs.
3-17	Added contact input and contact output modules 6W and 6X to Table 3-3 Contact Input and Output Module Assignments and to Figure 3-17 Contact Input and Output Module Wiring (Sheet 3 of 3)
5-369	Updated Thermal Overload Protection Logic diagram

Table D-4: Major changes for L90 manual version AF1 (English)

Page	Description
---	General revision
---	Updated "faceplate" to "front panel" for consistency and to reflect web site
---	Added graphical front panel option to order codes and specifications in chapter 2, Interfaces chapter 4, Settings chapter 5, Actual Values chapter 6
---	Added PEAP-GTC and PAP protocols for authenticating user logins when using a RADIUS server. Added to Settings > Product Setup > Security > RADIUS Authentication Method and to Modbus memory map and F codes.
---	Updated Contact Inputs from 96 to 120 and Contact Outputs from 64 to 72 in Product Description in chapter 2 and FlexLogic operands table in chapter 5
---	Updated Neutral Time Overcurrent element number from 4 to 6 in FlexLogic operands table, settings, features per product table, Modbus memory map
---	Updated Phase Time Overcurrent element number from 4 to 6 in FlexLogic operands table, settings, features per product table, Modbus memory map
---	Updated Breaker Restrike number from 4 to 2 in specifications, FlexLogic operands table, settings, features per product table, Modbus memory map

Page	Description
---	Updated Current CT Settings number from 4 to 6 in FlexLogic operands table, settings, features per product table, and Modbus memory map
---	Updated Ground Instantaneous number from 8 to 12 in FlexLogic operands table, settings, features per product table, Modbus memory map
---	Updated Ground Time Overcurrent number from 4 to 6 in FlexLogic operands table, settings, features per product table, Modbus memory map
---	Updated Phase Instantaneous Overcurrent number from 8 to 12 in FlexLogic operands table, settings, features per product table, Modbus memory map
---	Updated Neutral Instantaneous Overcurrent from 8 to 12 in FlexLogic operands table, settings, features per product table, Modbus memory map
3-35	Updated RS422 and Fiber Interface Connection figure for the clock channels (from 7a and 7b to 1a and 1b)
3-66	Added Connect to a D400 Gateway section
4-43	Updated LED Labelling instructions for the new Front Panel Label Designer
4-50	Added Standard Front Panel section for labelling LEDs and pushbuttons
5-105	Added USB Port section to enable/disable the USB port on the graphical front panel
5-125	Updated User-programmable Pushbuttons section as per specifications
5-147	Updated Breakers section as per specifications
5-152	Updated Disconnect Switches section as per specifications
11-5	Added Convert Device Settings section
11-7	Added Copy Settings to Other Device section
11-15	Added Replace Front Panel section for retrofit with the new graphical front panel

L90 Line Current Differential System

Abbreviations

A	Ampere
AC	Alternating Current
A/D	Analog to Digital
AE	Accidental Energization, Application Entity
AMP	Ampere
ANG	Angle
ANSI	American National Standards Institute
AR	Automatic Reclosure
ARP	Address Resolution Protocol
ASDU	Application-layer Service Data Unit
ASYM	Asymmetry
AUTO	Automatic
AUX	Auxiliary
AVG	Average
AWG	American Wire Gauge
BCS	Best Clock Selector
BER	Bit Error Rate
BF	Breaker Fail
BFI	Breaker Failure Initiate
BKR	Breaker
BLK	Block
BLKG	Blocking
BNC	Bayonet Neill-Concelman
BPNT	Breakpoint of a characteristic
BRKR	Breaker
CA	Certificate Authority
CAP	Capacitor
CC	Coupling Capacitor
CCVT	Coupling Capacitor Voltage Transformer
CFG	Configure / Configurable
.CFG	Filename extension for oscillography files
CHK	Check
CHNL	Channel
CID	Configured IED Description
CLS	Close
CLSD	Closed
CMND	Command
CMPRSN	Comparison
CO	Contact Output
COM	Communication
COMM	Communications
COMP	Compensated, Comparison
CONN	Connection
CONT	Continuous, Contact
CO-ORD	Coordination
CPU	Central Processing Unit
CRC	Cyclic Redundancy Code/Check
CRL	Certificate Revocation List
CRT, CRNT	Current
CSA	Canadian Standards Association
CT	Current Transformer
CVT	Capacitive Voltage Transformer
D/A	Digital to Analog
DC (dc)	Direct Current
DCE	Data Communications Equipment
DCS	Distributed Control System
DD	Disturbance Detector
DFLT	Default
DGNST	Diagnostics
DIFF	Differential
DIR	Directional
DISCREP	Discrepancy
DIST	Distance
DMD	Demand
DNP	Distributed Network Protocol
DPO	Dropout
DPS	Double-Point Status
DSP	Digital Signal Processor
DST	Daylight Savings Time
dt	Rate of Change
DTT	Direct Transfer Trip
DUTT	Direct Under-reaching Transfer Trip
EAD	Expert Arc Detector
EGD	Ethernet Global Data
ENCRMNT	Encroachment
EPRI	Electric Power Research Institute
.EVT	Filename extension for event recorder files
EXT	Extension, External
F	Field
FAIL	Failure
FD	Fault Detector
FDH	Fault Detector high-set
FDL	Fault Detector low-set
FIR	Finite Impulse Response
FLA	Full Load Current
FO	Fiber Optic
FPGA	Field-programmable Gate Array
FREQ	Frequency
FSK	Frequency-Shift Keying
FTP	File Transfer Protocol

FxE	FlexElement™
FWD	Forward
G	Generator
GCM	Galois Counter Mode
GDOI	Group Domain of Interpretation
GE	General Electric
GND	Ground
GNTR	Generator
GoCB	GOOSE Control Block
GOOSE	General Object Oriented Substation Event
GPS	Global Positioning System
GSU	Generator Step-Up
HARM	Harmonic / Harmonics
HCT	High Current Time
HGF	High-Impedance Ground Fault (CT)
HIZ	High-Impedance and Arcing Ground
HMI	Human-Machine Interface
HTTP	Hyper Text Transfer Protocol
HV	High Voltage
HYB	Hybrid
Hz	Hertz
I	Instantaneous
I_0	Zero Sequence current
I_1	Positive Sequence current
I_2	Negative Sequence current
IA	Phase A current
IAB	Phase A minus B current
IB	Phase B current
IBC	Phase B minus C current
IC	Phase C current
ICA	Phase C minus A current
ICD	IED Capability Description
ID	Identification
IED	Intelligent Electronic Device
IEC	International Electrotechnical Commission
IEEE	Institute of Electrical and Electronic Engineers
IG	Ground (not residual) current
Igd	Differential Ground current
IGMP	Internet Group Management Protocol
IID	Instantiated IED Capability Description
IN	CT Residual Current (3I0) or Input
INC SEQ	Incomplete Sequence
INIT	Initiate
INST	Instantaneous
INV	Inverse
I/O	Input/Output
IOC	Instantaneous Overcurrent
IOV	Instantaneous Overvoltage
IRC	Inter-Relay Communication
IRIG	Inter-Range Instrumentation Group
ISO	International Standards Organization
IUV	Instantaneous Undervoltage
K0	Zero Sequence Current Compensation
kA	kiloAmpere
KDC	Key Distribution Center
kV	kiloVolt
LCD	Liquid Crystal Display
LED	Light Emitting Diode
LEO	Line End Open
LFT BLD	Left Blinder
LOOP	Loopback
LPU	Line Pickup
LRA	Locked-Rotor Current
LTC	Load Tap-Changer
LV	Low Voltage
M	Machine
M2M	Machine to Machine
mA	MilliAmpere
MAG	Magnitude
MAN	Manual / Manually
MAX	Maximum
Mb	Megabit
MIC	Model Implementation Conformance
MIN	Minimum, Minutes
MMI	Man Machine Interface
MMS	Manufacturing Message Specification
MRT	Minimum Response Time
MSG	Message
MTA	Maximum Torque Angle
MTR	Motor
MVA	MegaVolt-Ampere (total 3-phase)
MVA_A	MegaVolt-Ampere (phase A)
MVA_B	MegaVolt-Ampere (phase B)
MVA_C	MegaVolt-Ampere (phase C)
MVAR	MegaVar (total 3-phase)
MVAR_A	MegaVar (phase A)
MVAR_B	MegaVar (phase B)
MVAR_C	MegaVar (phase C)
MVARH	MegaVar-Hour
MW	MegaWatt (total 3-phase)
MW_A	MegaWatt (phase A)
MW_B	MegaWatt (phase B)
MW_C	MegaWatt (phase C)
MWH	MegaWatt-Hour
N	Neutral
N/A, n/a	Not Applicable
NEG	Negative
NMPLT	Nameplate
NOM	Nominal
NTR	Neutral
O	Over
OC, O/C	Overcurrent
OCSP	Online Certificate Status Protocol
OF	Overload Factor
O/P, Op	Output
OP	Operate
OPER	Operate
OPERATG	Operating
O/S	Operating System
OSI	Open Systems Interconnect
OSB	Out-of-Step Blocking
OUT	Output
OV	Overvoltage
OVERFREQ	Overfrequency
OVLD	Overload
P	Phase
PC	Phase Comparison, Personal Computer
PCNT	Percent
PF	Power Factor (total 3-phase)
PF_A	Power Factor (phase A)
PF_B	Power Factor (phase B)
PF_C	Power Factor (phase C)
PFLL	Phase and Frequency Lock Loop
PHS	Phase
PICS	Protocol Implementation & Conformance Statement
PKI	Public Key Infrastructure
PKP	Pickup
PLC	Power Line Carrier
POS	Positive
POTT	Permissive Over-reaching Transfer Trip
PP	Power Profile
PRESS	Pressure
PRI	Primary
PROT	Protection

PRP	Parallel Redundancy Protocol
PSEL	Presentation Selector
PTP	Precision Time Protocol
pu	Per Unit
PUIB	Pickup Current Block
PUIT	Pickup Current Trip
PUSHBTN	Pushbutton
PUTT	Permissive Under-reaching Transfer Trip
PWM	Pulse Width Modulated
PWR	Power
QUAD	Quadrilateral
R	Rate, Reverse
RA	Registration Authority
RCA	Reach Characteristic Angle
REF	Reference
REM	Remote
REV	Reverse
R-GOOSE	Routable GOOSE
RI	Reclose Initiate
RIP	Reclose In Progress
RGT BLD	Right Blinder
RMA	Return Materials Authorization
RMS	Root Mean Square
ROCOF	Rate of Change of Frequency
ROD	Remote Open Detector
RRTD	Remote Resistance Temperature Detector
RST	Reset
RSTR	Restrained
RTD	Resistance Temperature Detector
RTU	Remote Terminal Unit
RX (Rx)	Receive, Receiver
s	second
S	Sensitive
SAT	CT Saturation
SBO	Select Before Operate
SCADA	Supervisory Control and Data Acquisition
SCC	Serial Communication Controller
SCD	System Configuration Description
SCL	Substation Configuration Language
SCEP	Simple Certificate Enrollment Protocol
SEC	Secondary
SEL	Select / Selector / Selection
SENS	Sensitive
SEQ	Sequence
SFTP	Secure Shell (SSH) File Transfer Protocol, Secure File Transfer Protocol
SIR	Source Impedance Ratio
SNTP	Simple Network Time Protocol
SRC	Source
SSB	Single Side Band
SSEL	Session Selector
STATS	Statistics
SUPN	Supervision
SUPV	Supervise / Supervision
SV	Supervision, Service
SYNC	Synchrocheck
SYNCHCHK	Synchrocheck
T	Time, transformer
TC	Thermal Capacity
TCP	Transmission Control Protocol
TCU	Thermal Capacity Used
TD MULT	Time Dial Multiplier
TEMP	Temperature
TFTP	Trivial File Transfer Protocol
THD	Total Harmonic Distortion
TMR	Timer
TOC	Time Overcurrent
TOV	Time Overvoltage
TRANS	Transient
TRANSF	Transfer
TSEL	Transport Selector
TUC	Time Undercurrent
TUV	Time Undervoltage
TX (Tx)	Transmit, Transmitter
U	Under
UC	Undercurrent
UCA	Utility Communications Architecture
UDP	User Datagram Protocol
UL	Underwriters Laboratories
UNBAL	Unbalance
UR	Universal Relay
URC	Universal Recloser Control
.URS	Filename extension for settings files
UV	Undervoltage
V/Hz	Volts per hertz
V_0	Zero Sequence voltage
V_1	Positive Sequence voltage
V_2	Negative Sequence voltage
VA	Phase A voltage
VAB	Phase A to B voltage
VAG	Phase A to Ground voltage
VARH	Var-hour voltage
VB	Phase B voltage
VBA	Phase B to A voltage
VBG	Phase B to Ground voltage
VC	Phase C voltage
VCA	Phase C to A voltage
VCG	Phase C to Ground voltage
VF	Variable Frequency
VIBR	Vibration
VT	Voltage Transformer
VTFF	Voltage Transformer Fuse Failure
VTLOS	Voltage Transformer Loss Of Signal
WDG	Winding
WH	Watt-hour
w/ opt	With Option
WGS	World Geodetic System
WRT	With Respect To
X	Reactance
XDUCER	Transducer
XFMR	Transformer
Z	Impedance, Zone

L90 Line Current Differential System

Index

Numerics

10BASE-F settings 5-46
7R module 3-40
7S module 3-39
87L
  actual values 6-16
  also see Current differential
  FlexLogic operands 5-192
  power system settings 5-144
  trip FlexLogic operands 5-192
  trip logic diagram 5-323
  trip settings 5-321

A

AC current input specifications 2-44
AC current inputs 5-139
AC inputs 3-17
AC voltage input specifications 2-44
Accents 4-56
Access Violation message 3-67
Acknowledge alarm 6-4
Activate relay 3-53
Active setting group 5-217
Actual values 6-1
  alarms for graphical front panel 6-3
  display on graphical front panel 4-34, 4-35
  monitor with Modbus Analyzer 11-1
  not activated graphical front panel 4-53
Add Device From File option 3-71
Add Device from File option 11-11
Add Device to Offline Window preferences 11-9
Add module, check settings not defaulted 11-16
Add relay 3-56
Administrator
  add user account 5-15
  command to force logoff 7-6
  no automatic logout from front panel 5-22
  role for CyberSentry 2-9
Aggregator
  actual values 6-26
  settings 5-185
Aggregator error message 7-11
Alarm LEDs 5-126
Alarms
  acknowledge 4-33, 6-3, 6-4
  add 4-34, 5-37
  messages 7-7
  overview 4-31, 10-17
  reset 4-33, 6-4
AND gate explained 4-83
Annunciator editor 4-34
ANSI device numbers 2-2
Apparent power 6-19
  specifications 2-43
Application examples
  breaker trip circuit integrity 5-352
  contact inputs 5-418
  high-voltage line configuration 8-13
  latching outputs 5-421
  low-voltage fault 8-14
  sensitive directional power 5-325
Apply settings to other device 11-7
Approvals 2-53
Architecture, relay 5-189
Arcing current 5-356
Attempt to contact RADIUS server failed message 7-13
Audit list of port numbers 5-46
Authentication by device or server 5-17
Authentication fail message 7-12
Automatic discovery of UR devices 3-66

Autoreclose
actual values 6-7
FlexLogic operands 5-192
logic diagrams 5-410
sequence diagram 5-414
settings 5-402
specifications 2-39
Auxiliary overvoltage
FlexLogic operands 5-192
logic 5-311
settings 5-310
specifications 2-37
Auxiliary undervoltage
FlexLogic operands 5-192
logic diagram 5-310
settings 5-309
specifications 2-36
Auxiliary voltage channel 3-17
Auxiliary voltage metering 6-19
AWG wire size 3-46
CT/VT 3-17
F485 converter 3-54
G.703 interface 3-39
module 7S 3-39
modules 6X, 6W 3-20
modules 7E, 7F, 7G, 7Q, 75 3-46
modules 7L, 7M, 7N, 7P, 74 3-46
modules 7T, 7W, 7V 3-43
RS422 and fiber interface 3-46

B

Back up settings 5-61, 11-8
Banks 5-8, 5-139, 5-140
Basic front panel
FlexLogic 5-191
interface 4-15
keypad 4-37
labels 4-48
LEDs 4-40, 5-126
navigation 4-50
order codes 2-12
pushbuttons 5-129
specifications 2-41
use, change setting 4-52
Battery
disposal 11-18
failure message 7-9
replace 11-17
Baud rate 5-43
BKR RESTRIKE ELEMENT error message 7-14
Blinking alarm 4-33
BLOCK setting 5-5
Blocking scheme
application of settings 8-19
FlexLogic operands 5-194
logic diagram 5-394
settings 5-391
Blocking1 scheme
logic diagram 5-396
settings 5-395
Bootloader upgrade 11-14
Breaker arcing current
actual values 6-34
clearing 5-42, 7-2
FlexAnalogs A-15, A-27
FlexLogic operands 5-193
logic diagram 5-358
measurement 5-357
settings 5-356
specifications 2-38
Breaker control
control of two breakers 4-59
dual breaker logic 5-154
FlexLogic operands 5-193
settings 5-151
with IEC 61850 5-92
Breaker failure
description 5-297
determination 5-298
FlexLogic operands 5-193
logic diagram 5-301, 5-302
main path sequence 5-298
settings 5-296, 5-299
specifications 2-38
Breaker flashover
FlexLogic operands 5-192
logic diagram 5-363
settings 5-359
specifications 2-38
Breaker restrike
FlexLogic operands 5-193
logic diagram 5-366
settings 5-364
specifications 2-39
Breaker-and-a-half scheme 5-6
Brick
remote resources actual values 6-29
Brightness 5-27
Broken conductor
FlexLogic operands 5-194
settings 5-376

C

C37.94 communications 3-48, 3-51
Cannot log in 2-9
Caution symbol in Offline Window 4-69
CE certification 2-53
Certification 2-53

Changes D-1
Channel
asymmetry settings 5-147
banks 5-139, 5-140
communication 3-37
monitor 2-7
Channel tests
actual values 6-8
commands 5-42, 7-2
procedure 9-1
settings 5-435
Charging current compensation 5-145
Chinese limited to 10 character input 5-28
CID file, SCD file 5-77, 5-79, 5-80
CID files 3-71, 5-61
import 11-12
import preferences 11-9
Circuit monitoring applications 5-351
Cleaning 2-53
Clear
files and records 11-21
LEDs 5-424
relay records using IEC 61850 5-97
relay records using settings 5-42
security logs 7-6
Clock
actual values 6-10
graphical front panel format 5-31
IRIG-B 3-36
PTP 5-111
set 7-3
settings 5-110
synchronize several devices 5-111
Close
HTTP port 5-102
IEC 60870-5-104 port 5-104
Modbus port 5-52
SNTP port 5-114
TFTP port 5-103
Web access port 5-102
Comm status remaining connections 6-11
Command line interface to software C-1
Command password 4-60, 5-11
Commands
control user accounts 5-15
menu 7-1
with IEC 61850 5-97
Communications
10BASE-F 5-46
channel 3-37
channel monitoring 2-7
connecting to the UR 3-64, 3-67
direct transfer trip 2-8
DNP 5-54
HTTP 5-102
IEC 60870-5-10 5-105
IEC 60870-5-104 5-103
inter-relay 2-5
inter-relay specifications 2-49
loopback test 2-7, 5-435
Modbus registers 5-110
Modbus settings 5-52
modem 3-65
overview 2-5
Protocol selection 5-53
RS232 ..... 3-32, 5-43
RS485 ..... 3-35, 5-43
settings 5-46, 5-54
specifications 2-48, 2-49
timeout 5-53
web server 5-102
Compare settings 11-7
Compensated overvoltage
FlexLogic operands 5-194
logic diagram 5-317
settings 5-315
specifications 2-37
Compliance 2-53
COMTRADE files, view 4-80
Conducted RFI specifications 2-52
Connect, unable to 3-67
Connection timeout 5-53
Connectors, LC and ST 3-13
Contact inputs
actual values 6-5
FlexLogic operands 5-201
settings 5-416
specifications 2-44
thresholds 5-416
wet and dry connections 3-25
Contact outputs
actual values 6-6
explained 5-419
FlexLogic operands 5-201
settings 5-419
Continuous monitor
FlexLogic operands 5-194
logic diagram 5-367
settings 5-366
Control elements 5-327
Control power
description 3-15
specifications 2-47

Control pushbuttons
FlexLogic operands 5-191
logic diagram 5-129
settings 5-128
specifications 2-41
Convert device settings 11-5
Copy of Copy of 11-7
Copy settings for upgrading 11-5
Copy settings to other device 11-7
Counters
actual values 6-9
settings 5-353
CPU module diagram 3-12
CPU wiring 3-33
Critical failure relay specifications 2-46
CSA certification 2-53
CT bank settings 5-139
CT failure
FlexLogic operands 5-194
logic diagram 5-369
settings 5-367
CT inputs 3-16, 5-8, 5-139
CT requirements 8-1
CT saturation analysis tool 8-2
CT wiring 3-17
Current bank 5-139
Current demand 5-122
Current differential
actual values 6-16
FlexLogic operands 5-191
logic diagram 5-221
settings 5-218
specifications 2-33
trip 5-321
Current metering actual values 6-17
Curves
definite time 5-262, 5-305
FlexCurves 5-161, 5-262
IAC 5-260
IEC 5-259
IEEE 5-257
inverse time undervoltage 5-305
types 5-257
Cutout, panel 3-2, 3-6
CyberSentry
FlexLogic operands 5-191
installation 3-70, 5-25
RS485 port limitation 5-18
security commands 7-6
security overview 2-9
software options 2-50
specifications 2-50
system logs 5-26

D

D400 connection 3-72
Dark graphical front panel 5-32
Data logger
actual values 6-33
clearing 5-42, 7-2
settings 5-120
specifications 2-42
Data, reading values 6-1
Dataset member is empty message 5-70
Date
set 5-30, 5-110, 7-3
DCmA inputs 6-27
actual values 6-27
FlexAnalogs A-27
settings 5-425
specifications 2-45
DCmA outputs
description 3-30
settings 5-428
specifications 2-47
DD
see Disturbance detector
Decommission 11-21
Default password 5-15
Default settings 11-7, 11-8
Definite time curve 5-262, 5-305
Delete files and records 5-42, 11-21
Demand metering
actual values 6-20
specifications 2-44
Demand records
clearing 7-2
Demand records, clearing 5-42
Demand, current 5-122
Deploy settings 11-7
Device authentication 5-17
Device Connectivity Report in Engineer 4-77
Device information files 1-2, 4-77
Device overview 11-1
Device setup 3-66
Diagnostic alarm error 7-9
Diagnostic failure error 7-8
Dielectric strength 3-15
Differential
current 2-33, 5-218
current FlexAnalogs A-16
stub bus 5-222
trip 5-321
Digital counters
actual values 6-9
FlexLogic operands 5-194
logic diagram 5-355
settings 5-353
Digital elements
application example 5-352
FlexLogic operands 5-194
logic diagram 5-351
settings 5-350

Digital outputs
see Contact outputs
Dimensions 3-2, 3-6
Direct inputs
actual values 6-6
error messages 7-9
FlexLogic operands 5-201
logic diagram 5-424
overview 5-423
settings 5-423
Direct outputs
error messages 7-9
logic diagram 5-424
overview 5-423
settings 5-424
Direct transfer trip 2-8
Direct under-reach transfer trip
see DUTT
Directional comparison blocking
see Blocking scheme
Directional comparison unblocking
see Unblocking scheme
Directional overcurrent
see Phase, Ground, and Neutral directional
Directional polarization 5-265
Directional power, sensitive actual values 6-23
Directional power, sensitive specifications 2-36
Disconnect switch
FlexLogic operands 5-200
logic 5-159
settings 5-156
Discover button 3-66
Disk space required 3-55
Display settings 5-27
Disposal 11-23
Dispose of battery 11-18
Distance
actual values 6-27
FlexAnalogs A-29
ground 5-237
ground specifications 2-32
logic diagram 5-227
Mho characteristic 5-231
mho characteristic 5-229
phase 2-31, 5-227
quad characteristic 5-230, 5-239
settings 5-226
Disturbance detector
FlexLogic operands 5-191, 5-200
internal 5-142
logic diagram 5-320
settings 5-318
DNP
connections remaining 6-11
select protocol 5-53
settings 5-54
DOS partition alarm error message 7-13
Downgrade firmware 11-14
Downgrade software 11-13
Download files 11-3
Drag and drop files 4-3
DTT 2-8
Duplicate device settings 11-7
Duplicate settings for upgrading 11-5
DUTT
application of settings 8-17
FlexLogic operands 5-195
logic diagram 5-381
settings 5-379

E

Electrostatic discharge specifications 2-52
Elements 5-4
End of life 11-23
Energy metering
actual values 6-20
clearing 5-42, 7-2
specifications 2-43
EnerVista UR setup
command line interface C-1
drag and drop files 4-3
event recorder 4-2
firmware upgrade or downgrade 11-14
installation 3-55
oscillography 4-2
requirements 3-55
restart relay 5-1
Engineer
command to force user logoff 7-6
create logic diagram 4-62
Error messages 4-70
Warning messages 4-71
Engineer toolbar 4-81
Enhanced front panel
FlexLogic 5-191
interface 4-15
keypad 4-37
labels 4-43
LEDs 4-39, 5-126
navigation 4-50
order codes 2-12
pushbuttons 5-129
Rev. 1 and 2 explained 3-2
specifications 2-41
use, change setting 4-52
Environment backup 11-9
Equations
definite time curve 5-262, 5-305
FlexCurves 5-262
FlexLogic 5-211
FlexLogic, protect 4-9
IAC curves 5-260
IEC curves 5-259
IEEE curves 5-257

Equipment mismatch error 7-8
Error messages 7-7
  device not recognized 11-13
  in Engineer 4-70
Ethernet
  actual values 6-10
  configuration 3-64
  port failure monitoring 5-39
  port settings 5-46
  port, turn on or off 5-46
  ports on rear panel 3-12
  Quick Connect 3-69
Event cause indicators 4-39
Event Cause LEDs 4-41
Event recorder
  actual values 6-31
  clearing 5-42, 7-2
  records explained 4-2
  specifications 2-42
  System Integrity Recover events 5-27
  system logs 5-26
  via EnerVista software 4-2
  view event records 6-31
EVENTS setting 5-5
Export settings to file 11-8

F

F485 3-54
Factory default reset 5-9, 5-23
Far-End Fault Indication 5-48
Fast distance algorithm 10-27
Fast form-C relay specifications 2-47
Fast transient testing specifications 2-52
Fault locator
  logic diagram 10-62
  operation 10-60
Fault locator specifications 2-42
Fault report
  actual values 6-29
  clearing 5-42, 7-2
  settings 5-115
Features 2-1, 2-3
Fiber signal loss detection 5-48
File transfer by IEC 61850 5-102
File transfer by TFTP 5-103
Files
  delete 11-21
  download 11-3
  drag and drop 4-3
  protect FlexLogic with password 4-9
  protect with password 4-7
  transfer from relay 4-16
  transfer to relay 4-1, 4-16
Firmware lock self-test 7-13
Firmware not supported by EnerVista 11-14
Firmware revision 6-35
Firmware upgrade or downgrade 11-14
Firmware version does not match EnerVista 11-13
First Ethernet Fail 5-39
Flash memory 11-21
Flash memory data storage 3-16
Flash messages 5-27
Flex State parameters
  actual values 6-9
  settings 5-135
  specifications 2-40
FlexAnalog parameters A-1
FlexCurves
  equation 5-262
  settings 5-161
  specifications 2-40
  table 5-161
FlexElements
  actual values 6-24
  direction 5-213
  FlexAnalogs A-29
  FlexLogic operands 5-195
  hysteresis 5-213
  logic diagram 5-212
  pickup 5-213
  settings 5-211
  specifications 2-41
FlexLogic
  create logic diagram with Engineer 4-62
  edit with equation editor 5-211
  equation editor 5-211
  equation example 5-330
  error messages 7-8
  evaluation 5-205
  example 5-206
  gate characteristics 5-204
  lock equations 4-9
  lock equations to serial number 4-11
  operands 5-191
  operators 5-204
  rules 5-205
  security 4-9
  specifications 2-40
  status in single-line diagram of graphical front panel 4-31
  timer settings 5-211
  worksheet 5-208
Force contact inputs 5-433
Force contact outputs 5-434
Foreign language keyboard 4-56
Form-A relay
  actual values 6-6
  high-impedance circuits 3-20
  outputs 3-18
  specifications 2-46

Form-C
actual values 6-6
critical failure relay 3-15
order codes 2-12
outputs 3-18
replacement modules 2-26
specifications 2-46
FPGA
revision 6-35
upgrade 11-15
Frequency metering
actual values 6-21
specifications 2-44
Frequency rate of change
actual values 6-24
FlexAnalogs A-2
FlexLogic operands 5-195
logic diagram 5-416
settings 5-415
specifications 2-38
Frequency tracking 6-24
Frequency, nominal 5-140
Front panel 3-2
clear 5-424
custom labels 4-43
interface 4-15
keypad 4-37
labels 4-43
language 5-27
LEDs 4-39
number of characters 4-17
password change 4-59
pushbuttons 5-129
specifications 2-50
switch between enhanced and basic 3-55
trouble message 7-10
types 4-15
use 4-15
use in EnerVista 4-17, 6-3
FUNCTION setting 5-5
Fuse failure 5-369
Fuse specifications 2-46
Fuses not field-replaceable 11-22

G

G.703 3-39
wire size 3-39
Gates, logic explained 4-83
Gateway address 5-49
GE type IAC curves 5-260
Getting help 1-2
GFP Version Mismatch error 7-10
GOOSE
actual values 6-25
error messages 7-11
FlexAnalogs A-30
routable, explained 5-68
settings 5-68
GPS problems 5-148
Graphical front panel
actual value menu not activated 4-53
actual values, phasors 4-57
alarm acknowledge, reset 4-33, 6-3, 6-4
alarm setup 5-37
annunciator editor 4-34
date and time 5-31
explained 4-18
FlexLogic 5-191
Home page configuration 5-30
interface 4-16
labels 4-49
LEDs 4-42, 5-126
Metering Editor 4-35
navigation 4-51
navigation keys 4-38
no display 5-32
order codes 2-12
phasor diagram 4-57, 5-33
pushbutton testing 7-3
pushbuttons 5-129
pushbuttons 9 to 16 4-29
settings 5-29
settings, breaker 5-152
settings, switch 5-158
single-line diagrams 4-20
specifications 2-48, 2-50
time 5-31
USB port 5-109
use, change setting 4-53
Ground current metering 6-18
Ground directional supervision 5-245
Ground distance
FlexLogic operands 5-195
logic diagram 5-242, 5-243, 5-244, 5-245
settings 5-237
specifications 2-32
Ground IOC
FlexLogic operands 5-195
logic diagram 5-283
settings 5-282
specifications 2-34
Ground TOC
FlexLogic operands 5-195
logic diagram 5-282
settings 5-281
specifications 2-34
Group 1 switch after powerup 5-217
Grouped elements 5-217
Guarantee D-1

H

HardFiber
- interface module described ... 3-18
- order codes for compatible URs ... 2-12
- remote resources actual values ... 6-29
- self-test errors ... 7-15

Harmonic content ... 6-22
Harmonics
- actual values ... 6-22
- specifications ... 2-44

Heartbeat messages ... 5-69, 5-72
Help, getting ... 1-2
Home page configuration ... 5-30
HTTP ... 5-102
- port, close ... 5-102

Humidity specifications ... 2-51
Hybrid permissive over-reach transfer trip
- see Hybrid POTT

Hybrid POTT
- application of settings ... 8-19
- FlexLogic operands ... 5-196
- logic diagram ... 5-391
- settings ... 5-387

Hysteresis ... 5-213

I

IAC curves ... 5-260
ICD file ... 5-77, 5-79, 5-80
IEC 60870-5-103 protocol
- explained ... 5-105
- select protocol ... 5-53
- settings ... 5-105

IEC 60870-5-104 protocol
- connections remaining ... 6-11
- port, close ... 5-104
- select protocol ... 5-53
- settings ... 5-103

IEC 61850 protocol
- compatibility with previous release ... 5-59
- error messages ... 7-10
- explained ... 5-59
- file transfer ... 5-102
- heartbeat messages ... 5-69, 5-72
- IID file ... 11-8
- settings in EnerVista ... 5-58
- specifications ... 2-48

IEC 61850-90-5
- actual values ... 6-26

IEC 61850-90-5 protocol
- explained ... 5-169
- settings ... 5-173

IEC CID files ... 5-61
IED setup ... 3-55
IEEE C37.94 communications ... 3-48, 3-51
IEEE curves ... 5-257
IID file ... 3-71, 5-61, 11-8
- import preferences ... 11-9

Import settings file ... 3-71
Import settings from SCD or CID file ... 11-12
In service indicator ... 7-7
In Service LED ... 3-53
Incompatible device order codes or versions ... 11-14
Incompatible hardware error ... 7-8
Inputs
- AC current specifications ... 2-44
- AC currents ... 5-139
- AC voltage ... 5-140
- AC voltage specifications ... 2-44
- contact input specifications ... 2-44
- contact inputs ... 5-416, 5-433
- DCmA input specifications ... 2-45
- DCmA inputs ... 3-30
- direct inputs ... 5-423
- IRIG-B ... 3-36
- IRIG-B specifications ... 2-45
- RTD input specifications ... 2-45
- RTD inputs ... 3-30
- virtual ... 5-418

Installation ... 3-2, 3-6
- activate relay ... 3-53
- add UR devices with auto discovery ... 3-66
- communications ... 3-33
- CT inputs ... 3-17
- RS485 ... 3-35
- set relay to Programmed ... 3-53
- settings ... 5-137

Instantaneous overcurrent
- see Phase, Ground, and Neutral IOCs

Interface
- front panel ... 4-15
- software ... 4-1

Internet access ... 5-102
Inter-relay communication ... 2-5
Inter-relay communication specifications ... 2-49
Inverse time undervoltage ... 5-305
In-zone transformer settings ... 5-149
IOC
- see Phase, Ground, and Neutral IOCs

IP address
- enter in software ... 5-46
- enter on front panel ... 3-57, 4-37
- gateway ... 5-49
- rules ... 3-57
- view ... 5-46

IP address migration ... 3-71
IP rating ... 2-51
- IP54 for enhanced front panel ... 3-2

IRIG-B
connection 3-36
CPU wiring 3-33
during start-up 5-148
error messages 7-9
port on rear panel 3-12
specifications 2-45
IRIG-B connection 3-12
ISO standards 2-53

J

Japanese limited to 10 character input 5-28

K

Keyboard 4-56
Keypad 4-37

L

Labels, front panel 4-43, 4-76
Lamp test 7-3
Language setting 5-27
Laser module 3-38
Latching outputs
application examples 5-421
error messages 7-10
settings 5-420
specifications 2-46
LC fiber 2-12, 3-12
LC fiber connector 3-13
LED test
commands 7-3
FlexLogic operand 5-202
settings 5-124
specifications 2-41
LEDs
clear 5-424
custom labels 4-43
explained 4-39
In Service 3-53
power supply module 3-16
settings 5-126
Trouble 3-53
Line pickup
FlexLogic operands 5-196
logic diagram 5-225
settings 5-223
specifications 2-33
Link power budget 2-49
Load encroachment
FlexLogic operands 5-196
logic diagram 5-256
settings 5-255
specifications 2-39
Load shedding 5-343, 5-415
Local access denied message 4-61, 5-22
Local access, explained 5-9
Local loopback settings 5-435
Local Setting Authorization 11-14
Lockout from software 5-15
Log in with password 3-70, 5-11
Log in, multiple users cannot 2-9
Log out
Administrator manually from front panel 5-22
Logic diagram explained 4-61
Logic diagrams, create 4-62
Logic gates, FlexLogic 4-83, 5-205
Logout users forcefully 7-3
Logs, system 5-26
Loop actual values 6-27
Loop filter block diagram 10-11
Loopback settings 5-435
Loopback test 2-7
Lost password 5-9
Low-voltage fault 8-14

M

MAC address
actual values 6-35
examples 5-45
RxGOOSE 5-75
settings for redundancy 5-47
TxGOOSE 5-71
Maintenance
actual values 6-34
alert to replace battery 7-9
battery replacement 11-17
cleaning 2-53
commands 7-3
module replacement 11-15
upgrade or downgrade 11-14
Manufacturing date 6-35
Maximum 6X, 6X wire size 3-20
Maximum CT/VT wire size 3-17
Memory polarization 10-28
Memory requirements 3-55
Memory voltage logic diagram 5-227
Menu navigation 4-50
Message about upgrade over Internet 11-14
Messages
clear front panel 5-424
error 7-7
errors and warnings in Engineer 4-69
Metering
conventions 6-12, 6-13
demand specifications 2-44
frequency specifications 2-44
power specifications 2-43
THD specifications 2-44
voltage specifications 2-43

Metering editor 4-35
Mho distance characteristic 5-229
Microsoft Windows requirement 3-55
Mimic diagrams 4-20
MMS connections remaining 6-11
Modbus
  connections remaining 6-11
  enter values in Modbus Analyzer 11-1
  Flex State parameters 5-135
  port, close 5-52
  register entry 5-110
  settings 5-52
  user map 5-110
Modbus Analyzer 11-1
Model information, view 6-35
Model number 3-1
Modem connection 3-65
Modification file number 6-35
Module 7R 3-40
Module 7S 3-39
Modules
  add and check settings not defaulted 11-16
  communications 3-33
  CT/VT 3-16, 5-8
  order codes 2-26
  power supply 3-15
  replace 11-15
  transducer I/O 3-31
Monitor
  actual values 11-1
  devices 11-1
Monitoring elements settings 5-355
Mounting 3-2, 3-6

N

Nameplate, rear 3-1
NAND gate explained 4-83
Navigation keys 4-37
Negative sequence directional overcurrent
  characteristics 5-294
  FlexLogic operands 5-196
  logic diagram 5-295
  settings 5-292
  specifications 2-35
Negative sequence IOC
  FlexLogic operands 5-196
  logic diagram 5-292
  settings 5-291
  specifications 2-35
Negative sequence TOC
  FlexLogic operands 5-196
  logic diagram 5-291
  settings 5-290
  specifications 2-34
Network settings migration 3-71
Neutral directional overcurrent
  FlexLogic operands 5-196
  logic diagram 5-276
  polarization 5-274
  settings 5-271
  specifications 2-35
Neutral IOC
  FlexLogic operands 5-196
  logic diagram 5-271
  settings 5-270
  specifications 2-34
Neutral overvoltage
  FlexLogic operands 5-196
  logic diagram 5-309
  settings 5-308
  specifications 2-37
Neutral TOC
  FlexLogic operands 5-196
  logic diagram 5-270
  settings 5-269
  specifications 2-34
Non-volatile data storage 3-16
Non-volatile latches
  FlexLogic operands 5-196
  settings 5-215
  specifications 2-41
NOR gate explained 4-83
NOT gate explained 4-83

O

Obtain list of port numbers 5-46
One-shot
  commands menu, PMU 7-4
  error compiling in Engineer 4-70
  FlexLogic operators 5-205
Open pole detector
  FlexLogic operands 5-197
  logic diagrams 5-372
  settings 5-370
  specifications 2-40
Operating system
  language 3-55
  requirements 3-55
Operating temperature 2-51
Operating times 2-31
Operator command to force logoff 7-6
OR gate explained 4-83
Order codes 2-12
  actual values 6-35
  update 3-65, 7-3
Oscillatory transient testing specifications 2-52

Oscillography
actual values 6-33
clearing 5-42, 7-2
settings 5-118
specifications 2-42
via EnerVista software 4-2
Out of service 5-1
Out-of-step tripping 2-39, 5-248
Outputs
contact outputs 5-419
control power specifications 2-47
critical failure relay specifications 2-46
direct outputs 5-424
Fast form-C relay specifications 2-47
Form-A relay 2-46, 3-18
Form-C relay 3-18
Form-C relay specifications 2-46
latching output specifications 2-46
latching outputs 5-420
virtual outputs 5-423
Overcurrent curve types 5-257
Overcurrent curves
FlexCurves 5-262
IAC 5-260
IEC 5-259
Overfrequency
FlexLogic operands 5-197
logic diagram 5-344
settings 5-344
specifications 2-38
Overvoltage
auxiliary 2-37, 5-310
logic diagram 5-317
neutral 2-37, 5-308
phase 2-36, 5-198, 5-307
settings 5-315

P

Panel cutout 3-2, 3-6
Parallel Redundancy Protocol
actual values 6-11
explained 5-48
settings 5-46
specifications 2-49
Parity 5-43
Part numbering 2-12
Passwords
authentication by device or server 5-17
bypass authentication 5-24
change 4-59
change after installation 3-70
change does not take relay out of service 5-1
command 4-60, 5-11
default 5-15
explained 2-8
FlexLogic operands 5-203
lockout 4-61, 5-15
lost password 5-9
requirements 5-9
reset to factory defaults 5-9
rules 5-9
settings 4-60, 5-11
settings templates 4-7
wrong entry 4-61
Permissive functions 5-305
Permissive overreach transfer trip
see POTT
Permissive under-reach transfer trip
see PUTT
Per-unit quantity 5-4
PFLL status 6-9
Phase angle metering 6-13
Phase current metering 6-17
Phase directional overcurrent
FlexLogic operands 5-197
logic diagram 5-268
phase A polarization 5-266
settings 5-265
specifications 2-35
Phase distance
FlexLogic operands 5-197
logic diagram 5-236
OP scheme 5-235
settings 5-227
specifications 2-31
Phase IOC
FlexLogic operands 5-197
logic diagram 5-265
settings 5-264
specifications 2-34
Phase overvoltage
FlexLogic operands 5-198
logic diagram 5-308
settings 5-307
specifications 2-36
Phase rotation 5-140
Phase select
FlexLogic operands 5-198
logic diagram 10-42
Phase TOC
FlexLogic operands 5-198
logic diagram 5-264
settings 5-262
specifications 2-34

Phase undervoltage
FlexLogic operands 5-198
logic diagram 5-307
settings 5-306
specifications 2-36
Phaselets 10-1
Phasor display graphical front panel 4-57, 5-33
Phasor estimation 10-22
Phasor explained 5-168
Phasors and phaselets 10-1
Pickup, line 5-223
Pilot channel relaying 2-5
Pilot schemes
application of settings 8-17
blocking 5-391, 5-395
directional comparison blocking 5-391, 5-395
directional comparison unblocking 5-396
DUTT 5-379
hybrid POTT 5-387
POTT 5-386
POTT settings 5-383
PUTT 5-381
settings 5-379
specifications 2-39
unblocking 5-396
PMU
actual values 6-25, 6-26, 6-33
connections remaining 6-11
explained 5-168
FlexAnalogs A-17, A-30
number in UR device 5-169
see Synchrophasor
settings, aggregator 5-185
settings, recording 5-184
settings, tests 5-432
status of activation 6-35
Port
Ethernet, turn on or off 5-46
failure monitoring 5-39
HTTP, close 5-102
IEC 60870-5-104, close 5-104
Modbus, close 5-52
on rear panel 3-12
SNTP, close 5-114
TFTP, close 5-103
USB 4-16
Port number
combinations with protocols 5-53
connectivity report of those used 4-77
DNP 5-54
HTTP 5-102
IEC 60870-5-104 5-103
list of 5-46
Modbus 5-52
Modbus during installation 3-65
RADIUS 5-20
SNTP 5-113
system log 5-20, 5-21
TFTP 5-103
POTT
application of settings 8-18
FlexLogic operands 5-199
hybrid POTT 5-387
logic diagram 5-385, 5-387
settings 5-383, 5-386
Power metering
specifications 2-43
values 6-19
Power off, save data first 3-16
Power supply
description 3-15
diagram 3-12
LED on module 3-16
removal to replace battery 11-17
RH/RL vs SH/SL 11-17
specifications 2-45
wire size 3-15
Power swing blocking 2-39, 5-248
Power swing detect
FlexLogic operands 5-199
logic diagram 5-253
settings 5-246
specifications 2-39
Power system settings 5-140
Precision Time Protocol
actual values for port state 6-10
clock settings 5-110
error message 7-10
port behavior 5-47
settings 5-111
specifications 2-48
Preferences
comparing settings 11-7
Engineer 4-77
IEC 61850 5-63
import file 11-9
Preserve custom attributes when importing SCD/CID files .. 11-9
Print front panel labels 4-43, 4-76
Process bus
order codes for compatible URs 2-12
overview 3-18
Process Bus Module
remote resources actual values 6-29

Product information
actual values 6-35
Device Connectivity Report in Engineer 4-77
firmware revision 6-35
Programmed mode 3-53
Protection elements 5-4
Protection features 2-3
Protection Summary interface 3-68, 4-4, 5-328
Protocol selection 5-53
Prototype firmware error message 7-13
PRP
actual values 6-11
explained 5-48
settings 5-46
specifications 2-49
PTP
actual values for port state 6-10
clock settings 5-110
error message 7-10
port behavior 5-47
settings 5-111
specifications 2-48
pu quantity 5-4
Pushbuttons
control FlexLogic 5-191
control logic diagram 5-129
control settings 5-128
control specifications 2-41
testing 7-3
user-programmable FlexLogic 5-204
user-programmable logic diagrams 5-134
user-programmable settings 5-129
user-programmable specifications 2-41
PUTT
application of settings 8-17
FlexLogic operands 5-199
logic diagram 5-383
settings 5-381

Q

Quad distance characteristic 5-230, 5-239, 10-26
Quick Connect 3-68, 3-69

R

RADIUS server
authentication 5-17
setup B-1
RAM required 3-55
Reactive power 6-19
Reactive power specifications 2-43
Real power 6-19
Real power specifications 2-43
Real-time clock
actual values for synchronization 6-10
settings 5-110
Reboot relay
using EnerVista 5-1
using relay 7-3
Recloser curves 5-164, 5-262
Reclosing
logic diagrams 5-410
sequence diagram 5-414
settings 5-402
Recycling 11-23
Redundancy
power supply 11-17
PRP actual values 6-11
PRP explained 5-48
settings 5-46
specifications 2-49
Relay architecture 5-189
Relay maintenance 7-3
Relay name 5-137
Release Notes 11-14
Remote access of front panel in EnerVista 4-17, 6-3
Remote access, explained 5-9
Remote devices
actual values 6-29
Remote loopback settings 5-435
Remote Setting Authorization 11-14
Remote terminal FlexAnalogs A-16
Repair 1-2, 11-22, D-1
Replace battery 11-17
Replace battery message 7-9
Replacement modules 2-26
Requirements for installation 3-55
Reset alarm 6-4
Reset to factory defaults 5-9, 5-23
Resetting
FlexLogic operands 5-203
setting to clear LEDs and messages 5-424
to factory defaults 5-9
Restart relay
using EnerVista 5-1
using relay 7-3
Restore settings 11-8
Restraint current FlexAnalogs A-17
Restricted ground fault
actual values 6-27
FlexAnalogs A-1
FlexLogic operands 5-199
logic diagram 5-289
settings 5-283
specifications 2-34
Revision history D-1
RF immunity specifications 2-52
RFI, conducted specifications 2-52
R-GOOSE description 5-68
RH/RL power supply module 11-17
RJ-45 .... 2-12, 3-12
RMS voltage specifications 2-43
Roles for login 2-9

Rolling demand 5-123
Routable GOOSE 5-68
RRTD COMM FAIL error 7-13
RS232
  baud rate 5-43
  configuration 3-68
  specifications 2-48
  wiring 3-32
RS422
  configuration 3-43
  timing 3-45
  two-channel application 3-43
  with fiber interface 3-46
RS485
  description 3-35
  limitation with CyberSentry 5-18
  port on rear panel 3-12
  settings 5-43
  specifications 2-48
RTD FlexAnalogs A-28
RTD inputs
  actual values 6-27
  settings 5-426
  specifications 2-45
Rules for passwords 5-9
RxGOOSE
  actual values 6-25
  error messages 7-11
  FlexAnalogs A-30
  settings 5-73
RxGOOSE Offline error 7-11

S

Save settings 4-1
Saving setting does not take relay out of service 5-1
SCADA protocol selection 5-53
SCD file
  import 11-12
  import preferences 11-9
SCL compatible 5-59
SCL file import 5-77, 5-79, 5-80
  preferences 11-9
Second Ethernet Fail 5-39
Security
  commands 7-6
  delete files and records 11-21
  EnerVista and UR secure with SSH 2-9
  failed authentication lockout 5-23
  forceful user logout 7-3
  lock FlexLogic equations 4-9
  lock settings 4-5
  password for settings template 4-7
  passwords for settings and commands 4-60, 5-11
  RADIUS server for user authentication B-1
  role-based user access 2-9
  settings 5-21
  software options 2-50
  specifications 2-50
  system and event logs 5-26
Security audit list of port numbers 5-46
Selector switch
  actual values 6-9
  application example 5-335
  FlexLogic operands 5-199
  logic diagram 5-337
  settings 5-331
  specifications 2-41
  timing 5-334
Self-tests
  description 7-7
  error messages 7-7
  FlexLogic operands 5-203
  user-programmable 5-127
Sensitive directional power
  actual values 6-23
  characteristic 5-325
  FlexAnalogs A-1
  FlexLogic operands 5-195
  logic diagram 5-327
  settings 5-324
  specifications 2-36
Serial number 3-1, 4-11, 6-35
Serial ports
  settings 5-43
  specifications 2-48
Server authentication 5-17
Server unavailable self-test 7-13
Service life expected 11-3
Service Report 1-2
Setting groups 5-217, 5-329
  active setting group 5-217
  FlexLogic operands 5-200
  troubleshooting 5-217
Setting lock self-test 7-13

Settings 5-1
  back up 5-61, 11-8
  change 4-52
  change does not take relay out of service 5-1
  compare 11-7
  control user accounts 5-15
  convert 11-5
  edit 4-52
  export 11-8
  import 3-71
  lock 4-5
  not updated automatically among computers 3-67
  read from device with Modbus Analyzer 11-1
  restore 11-8
  upgrade 11-5
  write to device with Modbus Analyzer 11-1
Settings file 5-61
  description 4-1
  import 3-71
  takes relay out of service when loaded 4-2
  traceability 4-12
  transfer with USB stick 4-16
Settings password 4-60, 5-11
Settings templates
  description 4-5
  edit 4-6
  enable 4-5
  password protection 4-7
  remove 4-9
  view 4-7
SFP
  error messages 7-12
  explained 3-11
  module fail message 7-12
SH/SL power supply module 11-17
Signal loss detection for fiber 5-48
Signal sources
  description 5-6
  metering 6-17
  settings 5-141
Simulation bit 5-431
Single line diagram 2-3
Single-line diagram 4-20
  save as separate file 4-24
Site Targets 11-1
Smart defaults 5-119
SNTP protocol
  accuracy specifications 2-48
  error messages 7-10
  port, close 5-114
  settings 5-113
Software
  installation 3-55
  interface explained 4-1
  language 5-28
  system requirements 3-55
  update or downgrade 11-13
Source frequency 6-21
Source transfer schemes 5-305
Sources
  description 5-6
  example of use 5-143
  FlexAnalogs A-2
  metering 6-17
  settings 5-141
Special characters 4-56
Specifications 2-30
ST fiber 2-12, 3-12
ST fiber connector 3-13
Standards, certification 2-53
startup events 5-27
Status LEDs 4-40, 4-42
Stop blinking alarm 4-33
Storage 11-22
Storage media alarm 7-13
Stub bus
  FlexLogic operand 5-200
  logic diagram 5-223
  settings 5-222
Substation D400 3-72
Supervising elements
  settings 5-317
Support, technical 1-2
Surge immunity specifications 2-52
Switch
  actual values 6-9
  control with IEC 61850 5-94
  settings 5-156, 5-331
Synchrocheck
  actual values 6-23
  FlexAnalogs A-24
  FlexLogic operands 5-200
  logic diagram 5-349
  settings 5-345
  specifications 2-39
Synchronize
  clock using time source 5-110
  clocks of UR devices to local computer 5-111
  files between offline and online 4-69
Synchronize Devices 5-111
Synchrophasors
  actual values 6-25, 6-33
  clearing PMU records 7-2
  commands 7-4
  explained 5-168
  FlexLogic operands 5-197, 5-198
  phasor measurement configuration 5-173, 5-185, 5-187
  phasor measurement unit calibration 5-177
  phasor measurement unit recording 5-184
  test values 5-432
Syslog 5-26
System and device information 4-77
System Exception message 7-11
System failure error 7-9
System frequency 5-140

System Integrity Recovery events 5-27
System logs 5-26
System requirements 3-55
System setup 5-139

T

Target messages 7-7
  defined 4-19
TARGET setting 5-5
Targets menu 7-7
Targets overview by device 11-1
TBD 11-9
TCP port number for web access 5-102
Technical support 1-2
  files 1-2, 11-3
Temperature
  FlexLogic monitor operand 5-203
  monitor 7-11
  operating 2-51
Test voltages 3-15
Testing
  channel 5-435
  Communications with loopback 5-435
  force contact inputs 5-433
  force contact outputs 5-434
  lamp test 7-3
  LEDs 7-3
  loopback 5-435
  pushbuttons 7-3
  self-test error messages 7-7
  settings 5-431, 5-432
  synchrophasors 5-432
TFTP
  port, close 5-103
  put cannot be done 5-103
  settings 5-103
THD A-18
THD metering 6-22
THD metering specifications 2-44
The URS file is part of a device folder 11-11
Thermal demand characteristic 5-122
Thermal overload protection
  logic diagram 5-376
  settings 5-373
  specifications 2-40
Third Ethernet Fail 5-39
Three-terminal mode 2-7
Tilda on front panel 4-17
Time
  actual values 6-10, 6-33, 6-34
  FlexLogic timer settings 5-211
  graphical front panel format 5-31
  incorrect from GPS 5-148
  operating 6-35
  overwritten by external source 7-3
  set 5-30, 5-110, 7-3
Time overcurrent
  see Phase, Neutral, and Ground TOCs
Timeout, connection 5-53
TOC
  ground 5-281
  neutral 5-269
  phase 5-262
  specifications 2-34
Toolbar 4-81
Torque for screws 2-53, 3-12, 3-20
Total harmonic distortion A-18
Traceability
  data 4-13
  overview 4-12
  rules 4-14
  view data 4-14
Tracking frequency 6-24
Transducer I/O
  actual values 6-27
  settings 5-425
  specifications 2-45
  wiring 3-31
Transfer files with USB drive 4-16
Transformer, in-zone settings 5-149
Triangle in Offline Window 4-69
Trip bus
  FlexLogic operands 5-201
  logic diagram 5-329
  settings 5-327
Trip LEDs 5-126
Trip output
  FlexLogic operands 5-201
  logic diagrams 5-341
  settings 5-337
  specifications 2-39
Trouble indicator 7-7
Trouble LED 3-53
Troubleshooting
  access to device 3-67
  breaker not working 5-350
  dark graphical front panel 5-32
  Engineer 4-70, 4-71
  error messages 7-7
  setting not working 5-350
  unit not programmed error 5-137
Turn off alarm 4-33
Two-terminal mode 2-7
TxGOOSE
  actual values 6-12
  settings 5-69

U

UDP for TFTP 5-103
UL certification 2-53
Unable to access device 3-67
Unable to put relay in flash mode 11-14

Unauthorized access
commands 5-42
resetting 7-2
Unauthorized firmware attempt message 7-13
Unauthorized setting write message 7-13
Unblocking scheme
FlexLogic operands 5-194
logic diagram 5-401
settings 5-396
Underfrequency
FlexLogic operands 5-201
logic diagram 5-343
settings 5-343
specifications 2-37
Undervoltage
auxiliary 2-36
characteristics 5-305
phase 2-36, 5-306
settings 5-306
Uninstall 11-21
Unit not programmed 5-137
Unit not programmed message 7-8
Unpacking the relay 3-1
Update SCL files prompt 4-69
Update settings with Convert Device Settings 11-5
Updates
bootloader 11-14
device not recognized 11-13
firmware 11-14
FPGA 11-15
instruction manual 3-1
order code 7-3
single-line diagrams not retained 4-24
software 11-13
Upgrade device settings 11-5
Upgrade over Internet message 11-14
URS file does not include IEC 61850 configuration 11-11
URS file is part of a device folder 11-11
URS settings file 3-71, 5-61, 11-8
USB
Quick Connect 3-69
USB port
graphical front panel 4-16, 5-109
specifications 2-48
User accounts
add 5-15
authentication by device or server 5-17
multiple login limitation CyberSentry 2-9
passwords for settings and commands 4-60, 5-11
User-definable displays
example 5-137
invoking and scrolling 5-136
settings 5-136
specifications 2-41
User-programmable LEDs
custom labels 4-43
defaults 4-41
settings 5-126
specifications 2-41
User-programmable pushbuttons
FlexLogic operands 5-204
graphical front panel buttons 9 to 16 4-29
logic diagrams 5-134
settings 5-129
specifications 2-41
testing 7-3
User-programmable self-test settings 5-127

V

VAR hour
actual values 6-20
specifications 2-43
Vibration testing specifications 2-52
Virtual inputs
actual values 6-5
commands 7-2
explained 5-418
FlexLogic operands 5-202
logic diagram 5-419
settings 5-418
Virtual outputs
actual values 6-6
explained 5-423
FlexLogic operands 5-202
settings 5-423
Voltage banks 5-140
Voltage deviation specifications 2-52
Voltage elements 5-305
FlexElement is phase to ground 5-214
Voltage metering
actual values 6-18
specifications 2-43
Voltage Monitor error 7-14
Voltage restraint characteristic 5-263
Volts per hertz
actual values 6-26
curves 5-312
FlexAnalogs A-30
FlexLogic operands 5-201
logic diagram 5-312
settings 5-311
specifications 2-37
VT fuse failure
FlexAnalogs A-30
FlexLogic operands 5-200
logic diagram 5-370
settings 5-369
VT inputs 3-16, 3-17, 5-8, 5-140
VT wiring 3-17
VTFF 5-369, A-30

W

Warning messages in Engineer 4-71
Warning symbol in Offline Window 4-69
Warning, firmware upload not supported 11-14
Warranty D-1
Watt-hour specifications 2-43
Watt-hours 6-20
Wattmetric zero-sequence directional
  actual values 6-25
  FlexLogic operands 5-201
  logic diagram 5-280
  settings 5-276
  specifications 2-36
Waveform files, view 4-80
Web access port 5-102
Web server protocol 5-102
Windows requirement 3-55
Wire size
  CT/VT 3-17
  F485 converter 3-54
  G.703 and fiber interface 3-46
  G.703 interface 3-39
  module 7S 3-39
  modules 6X, 6W 3-20
  modules 7E, 7F, 7G, 7Q, 75 3-46
  modules 7L, 7M, 7N, 7P, 74 3-46
  modules 7T, 7W, 7V 3-43
  power supply module 3-15
  RS422 and fiber interface 3-46
  RS422 interface 3-43
Wiring diagram 3-14
Withdrawal from operation 11-21
Wrong transceiver message 7-12

X

XOR gate explained 4-83

Y

Yellow caution icon in Offline Window 4-69

Z

Zero-sequence core balance 3-17
Zero-sequence current removal 5-147

GE Vernova
650 Markland Street
Markham, Ontario
Canada L6C 0M1
Worldwide telephone: +1 905 927 7070
Europe/Middle East/Africa telephone: +34 94 485 88 54
North America toll-free: 1 800 547 8629
Fax: +1 905 927 5098
Worldwide e-mail: GA.support@gevernova.com
Website: https://www.gevernova.com/grid-solutions/multilin/