GE VERNOVA

N60

Network Stability and Synchrophasor Measurement System

Instruction Manual

Product version: 8.5x

Publication reference: 1601-0125-AP1

E83849

LISTED
IND.CONT. EQ.
52TL

Copyright © 2025 GE Vernova. All rights reserved.

GridBeats, Universal Relay, Multilin, MiCOM, S1 Agile, P40 Agile, DS Agile, EnerVista, CyberSentry, HardFiber, FlexLogic, FlexElement, FlexCurve, FlexAnalog, FlexInteger and FlexState are trademarks or registered trademarks of GE Vernova.

The contents of this manual are the property of GE Vernova. This documentation is furnished on license and may not be reproduced in whole or in part without the permission of GE Vernova. The content of this manual is for informational use only and is subject to change without notice.

It is the responsibility of the user for verifying and validating the suitability of all GE Vernova products. This equipment must be used within its design limits. The proper application including configuration and setting of this product to suit the power system assets is the responsibility of the user, who is also required to ensure that all local or regional safety guidelines are adhered to. Incorrect application of this product could risk damage to property/the environment, personal injuries or fatalities and shall be the sole responsibility of the person/entity applying and qualifying the product for use.

The content in this document has been developed to provide guidance to properly install, configure and maintain this product for its intended applications. This guidance is not intended to cover every possible contingency that may arise during commissioning, operation, service, or maintenance activities. Should you encounter any circumstance's not clearly addressed in this document, contact your local GE Vernova service site.

IT IS THE SOLE RESPONSIBILITY OF THE USER TO SECURE THEIR NETWORK AND ASSOCIATED DEVICES AGAINST CYBER SECURITY INTRUSIONS OR ATTACKS. GE VERNOVA AND ITS AFFILIATES ARE NOT LIABLE FOR ANY DAMAGES AND/OR LOSSES ARISING FROM OR RELATED TO SUCH SECURITY INTRUSION OR ATTACKS.

N60 Network Stability and Synchrophasor Measurement System

Table of contents

1 INTRODUCTION
1.1 Safety symbols and definitions 1-1
1.1.1 General cautions and warnings 1-1
1.2 For further assistance 1-2

2 PRODUCT DESCRIPTION
2.1 Product description 2-1
2.2 Security 2-3
2.3 Order codes 2-8
2.3.1 Order codes with enhanced CT/VT modules 2-8
2.3.2 Order codes with process bus modules 2-11
2.3.3 Replacement modules 2-13
2.4 Signal processing 2-14
2.4.1 UR signal processing 2-14
2.5 Specifications 2-16
2.5.1 Protection elements 2-17
2.5.2 User-programmable elements 2-21
2.5.3 Monitoring 2-23
2.5.4 Metering 2-24
2.5.5 Inputs 2-25
2.5.6 Power supply 2-27
2.5.7 Outputs 2-27
2.5.8 Communication protocols 2-29
2.5.9 Inter-relay communications 2-31
2.5.10 CyberSentry security 2-32
2.5.11 Graphical front panel 2-32
2.5.12 Environmental 2-33
2.5.13 Type tests 2-34
2.5.14 Production tests 2-34
2.5.15 Approvals 2-35
2.5.16 Maintenance 2-35

3 INSTALLATION
3.1 Unpack and inspect 3-1
3.2 Panel cutouts 3-2
3.2.1 Rear terminal layout 3-5
3.3 Wiring 3-8

3.3.1 Typical wiring ... 3-8
3.3.2 Dielectric strength ... 3-10
3.3.3 Control power ... 3-10
3.3.4 CT/VT modules ... 3-11
3.3.5 Process Bus Module for HardFiber ... 3-13
3.3.6 Contact inputs and outputs ... 3-14
3.3.7 Transducer inputs and outputs ... 3-26
3.3.8 RS232 port ... 3-28
3.3.9 CPU communication ports ... 3-29
3.3.10 IRIG-B ... 3-32
3.4 Direct input and output communications ... 3-33
3.4.1 Description ... 3-33
3.4.2 Fiber: LED and ELED transmitters ... 3-36
3.4.3 Fiber laser transmitters ... 3-36
3.4.4 G.703 interface ... 3-37
3.4.5 RS422 interface ... 3-41
3.4.6 Two-channel two-clock RS422 interface ... 3-43
3.4.7 RS422 and fiber interface ... 3-44
3.4.8 IEEE C37.94 interface ... 3-44
3.5 Activate relay ... 3-47
3.6 Install software ... 3-48
3.6.1 EnerVista communication overview ... 3-48
3.6.2 System requirements ... 3-49
3.6.3 Install software ... 3-50
3.7 Add device to software ... 3-51
3.7.1 Set IP address in UR ... 3-52
3.7.2 Configure serial connection ... 3-58
3.7.3 Configure Ethernet connection ... 3-59
3.7.4 Configure modem connection ... 3-60
3.7.5 Automatic discovery of UR devices ... 3-61
3.8 Connect to the N60 ... 3-62
3.8.1 Connect to the N60 in EnerVista ... 3-62
3.8.2 Use Quick Connect via front RS232 port ... 3-63
3.8.3 Use Quick Connect via front USB port ... 3-64
3.8.4 Use Quick Connect via a rear Ethernet port ... 3-64
3.9 Set up CyberSentry and change default password ... 3-65
3.10 Import settings ... 3-66
3.10.1 Import settings from XML file ... 3-66
3.10.2 Import settings from device files ... 3-70
3.11 Connect to D400 gateway ... 3-71
3.11.1 Oscillography files ... 3-71
3.11.2 Event records ... 3-72
3.11.3 Log files ... 3-72
3.11.4 Setting files ... 3-72

4 INTERFACES
4.1 EnerVista software interface ... 4-1
4.1.1 Introduction ... 4-1
4.1.2 Settings files ... 4-1
4.1.3 Event viewing ... 4-2
4.1.4 File support ... 4-2
4.1.5 EnerVista main window ... 4-3
4.1.6 Protection summary window ... 4-5
4.1.7 Settings templates ... 4-6
4.1.8 Secure and lock FlexLogic equations ... 4-10
4.1.9 Settings file traceability ... 4-13

4.2 Front panel interface 4-16
4.2.1 Front panel 4-16
4.2.2 Front panel display 4-18
4.2.3 Front panel navigation keys 4-38
4.2.4 LED indicators 4-39
4.2.5 Front panel labelling 4-44
4.2.6 Menu navigation 4-50
4.2.7 Change settings 4-52
4.2.8 View actual values 4-57
4.2.9 Breaker control 4-58
4.2.10 Change passwords 4-59
4.2.11 Invalid password entry 4-61
4.3 Logic diagrams 4-62
4.4 FlexLogic design using Engineer 4-63
4.4.1 Design logic 4-65
4.4.2 Send file to and from device 4-75
4.4.3 Monitor logic 4-76
4.4.4 View front panel and print labels 4-77
4.4.5 Generate connectivity report 4-77
4.4.6 Preferences 4-78
4.4.7 Toolbars 4-81

5 SETTINGS
5.1 Settings menu 5-1
5.2 Overview 5-4
5.2.1 Introduction to elements 5-4
5.2.2 Introduction to AC sources 5-6
5.3 Product setup 5-7
5.3.1 Security 5-7
5.3.2 Display properties 5-26
5.3.3 Graphical front panel 5-28
5.3.4 Clear relay records 5-41
5.3.5 Communications 5-41
5.3.6 Modbus user map 5-122
5.3.7 Real-time clock 5-123
5.3.8 User-programmable fault reports 5-132
5.3.9 Oscillography 5-133
5.3.10 Data logger 5-136
5.3.11 Demand 5-137
5.3.12 User-programmable LEDs 5-138
5.3.13 User-programmable self-tests 5-143
5.3.14 Control pushbuttons 5-144
5.3.15 User-programmable pushbuttons 5-145
5.3.16 Flex state parameters 5-151
5.3.17 User-definable displays 5-152
5.3.18 Direct inputs and outputs 5-154
5.3.19 Teleprotection 5-160
5.3.20 Installation 5-161
5.4 Remote resources 5-162
5.4.1 Remote resources configuration 5-162
5.5 System setup 5-163
5.5.1 AC inputs 5-163
5.5.2 Power system 5-165
5.5.3 Signal sources 5-166
5.5.4 Breakers 5-171
5.5.5 Disconnect switch control 5-180

5.5.6 FlexCurves 5-188
5.5.7 Phasor Measurement Unit 5-195
5.6 Process bus module 5-217
5.6.1 Parallel Redundancy Protocol (PRP) 5-217
5.6.2 High-availability seamless redundancy (HSR) 5-218
5.6.3 General 5-220
5.6.4 SV Stream Config 5-226
5.7 FlexLogic 5-242
5.7.1 FlexLogic operands 5-242
5.7.2 FlexLogic rules 5-256
5.7.3 FlexLogic evaluation 5-257
5.7.4 FlexLogic example 5-257
5.7.5 FlexLogic equation editor 5-262
5.7.6 FlexLogic timers 5-262
5.7.7 FlexElements 5-263
5.7.8 Non-volatile latches 5-267
5.7.9 FlexMath 5-268
5.8 Grouped elements 5-271
5.8.1 Overview 5-271
5.8.2 Setting group 1 5-271
5.8.3 Power swing detect (ANSI 68) 5-272
5.8.4 Phase current 5-281
5.8.5 Neutral current 5-294
5.8.6 Ground current 5-301
5.8.7 Voltage elements 5-304
5.8.8 Supervising elements 5-310
5.8.9 Sensitive directional power (ANSI 32) 5-312
5.9 Control elements 5-315
5.9.1 Overview 5-315
5.9.2 Trip bus 5-316
5.9.3 Setting groups 5-318
5.9.4 Selector switch 5-320
5.9.5 Underfrequency (ANSI 81U) 5-327
5.9.6 Overfrequency (ANSI 81O) 5-328
5.9.7 Synchrocheck (ANSI 25) 5-329
5.9.8 Digital elements 5-335
5.9.9 Digital counters 5-338
5.9.10 Monitoring elements 5-340
5.9.11 Frequency rate of change (ANSI 81R) 5-350
5.9.12 Digitizers 5-352
5.9.13 8-bit comparators 5-355
5.9.14 8-bit switches 5-361
5.9.15 Multi-range signal oscillation detector (MSOD) 5-362
5.10 Inputs/outputs 5-367
5.10.1 Contact inputs 5-367
5.10.2 Virtual inputs 5-369
5.10.3 Contact outputs 5-370
5.10.4 Virtual outputs 5-373
5.10.5 Resetting 5-374
5.10.6 Direct inputs and outputs 5-375
5.10.7 Direct analog inputs and outputs 5-378
5.10.8 Direct integer inputs and outputs 5-381
5.10.9 Teleprotection 5-382
5.11 Transducer inputs/outputs 5-384
5.11.1 DCmA inputs 5-384
5.11.2 RTD inputs 5-385

5.11.3 DCmA outputs 5-386
5.12 Testing 5-390
5.12.1 IED mode config 5-390
5.12.2 Force contact inputs 5-393
5.12.3 Force contact outputs 5-394
5.12.4 Phasor Measurement Unit test values 5-394
5.13 Simulation 5-396
5.13.1 Subscribe to simulated values 5-396
5.13.2 Publish simulated values 5-398

6 ACTUAL VALUES
6.1 Actual values menu 6-1
6.2 Front panel 6-4
6.2.1 Enhanced and basic front panels 6-4
6.2.2 Graphical front panel 6-5
6.3 Status 6-5
6.3.1 IED 6-5
6.3.2 Contact inputs 6-5
6.3.3 Virtual inputs 6-6
6.3.4 RxGOOSE boolean inputs 6-6
6.3.5 RxGOOSE DPS inputs 6-6
6.3.6 Teleprotection inputs 6-6
6.3.7 Contact outputs 6-7
6.3.8 Virtual outputs 6-7
6.3.9 RxGOOSE status 6-7
6.3.10 RxGOOSE statistics 6-8
6.3.11 Fixed GOOSE 6-8
6.3.12 Digital counters 6-9
6.3.13 Breaker status 6-9
6.3.14 Selector switches 6-10
6.3.15 Flex States 6-10
6.3.16 Ethernet 6-10
6.3.17 Real time clock synchronizing 6-11
6.3.18 Direct inputs 6-12
6.3.19 Direct devices status 6-12
6.3.20 Direct integer inputs 6-13
6.3.21 Teleprotection channel tests 6-13
6.3.22 Remaining connection status 6-13
6.3.23 Parallel Redundancy Protocol (PRP) 6-14
6.3.24 TxGOOSE status 6-15
6.3.25 Protocol 6-15
6.4 Metering 6-15
6.4.1 Metering conventions 6-15
6.4.2 Sources 6-19
6.4.3 Synchrocheck 6-25
6.4.4 Tracking frequency 6-25
6.4.5 FlexElements 6-26
6.4.6 Digitizer 6-26
6.4.7 8-bit comparators 6-26
6.4.8 Summator 6-27
6.4.9 Direct analogs 6-27
6.4.10 RxGOOSE analogs 6-27
6.4.11 Sensitive directional power 6-27
6.4.12 Frequency rate of change 6-28
6.4.13 Phasor Measurement Unit 6-28
6.4.14 PMU aggregator 6-29

6.4.15 Transducer inputs and outputs 6-29
6.4.16 Harmonic detection 6-29
6.4.17 Multi-range signal oscillation detector (MSOD) 6-29
6.5 Remote resources 6-30
6.5.1 Field unit 6-30
6.6 Process Bus Module 6-30
6.6.1 General status 6-30
6.6.2 RxSV status 6-31
6.6.3 Clock synchronizing 6-32
6.6.4 PRP 6-33
6.6.5 HSR 6-35
6.7 Records 6-35
6.7.1 User programmable fault reports 6-35
6.7.2 Event records 6-35
6.7.3 Oscillography 6-37
6.7.4 Data logger 6-37
6.7.5 Phasor Measurement Unit records 6-38
6.8 Product information 6-38
6.8.1 Model information 6-38
6.8.2 Firmware revisions 6-39

7 COMMANDS AND TARGETS
7.1 Commands menu 7-1
7.1.1 Virtual inputs 7-2
7.1.2 Clear records 7-2
7.1.3 Set date and time 7-3
7.1.4 Relay maintenance 7-4
7.1.5 Phasor Measurement Unit one-shot 7-5
7.1.6 Security 7-7
7.2 Targets menu 7-7
7.2.1 Target messages 7-7
7.2.2 Relay self-tests 7-8

8 COMMISSIONING
8.1 Testing 8-1
8.1.1 Testing underfrequency and overfrequency elements 8-1

9 MAINTENANCE
9.1 Monitoring 9-1
9.1.1 Devices with Site Targets 9-1
9.1.2 Data with Modbus Analyzer 9-1
9.2 General maintenance 9-3
9.2.1 In-service maintenance 9-3
9.2.2 Out-of-service maintenance 9-3
9.2.3 Unscheduled maintenance (system interruption) 9-3
9.3 Retrieve files 9-3
9.3.1 CyberSentry security event files 9-4
9.4 Convert device settings 9-5
9.5 Copy settings to other device 9-7
9.6 Export settings 9-7
9.7 Compare settings 9-8
9.7.1 Compare against defaults 9-8
9.7.2 Compare two devices 9-8
9.8 Back up and restore settings 9-9
9.8.1 Back up settings 9-9
9.8.2 Restore settings 9-12

9.9 Upgrade software 9-14
9.10 Upgrade firmware 9-15
9.11 Replace module 9-17
9.12 Battery 9-19
9.12.1 Replace battery 9-19
9.12.2 Dispose of battery 9-20
9.13 Clear files and data after uninstall 9-23
9.14 Repairs 9-24
9.15 Storage 9-24
9.16 Disposal 9-25

A FLEXANALOG OPERANDS
A.1 FlexAnalog items A-1
A.1.1 N60 FlexAnalog data items A-1

B RADIUS SERVER CONFIGURATION
B.1 RADIUS server configuration B-1

C COMMAND LINE INTERFACE
C.1 Command line interface C-1

D MISCELLANEOUS
D.1 Warranty D-1
D.2 Revision history D-1
D.2.1 Major changes D-2
D.3 Open source licenses D-3

ABBREVIATIONS

INDEX

N60 Network Stability and Synchrophasor Measurement System

Chapter 1: Introduction

This chapter outlines safety and technical support information.

1.1 Safety symbols and definitions

Before attempting to install or use the device, review all safety indicators in this document to help prevent injury, equipment damage, or downtime.

The following safety and equipment symbols are used in this document.

DANGER **Indicates a hazardous situation which, if not avoided, will result in death or serious injury.**

WARNING **Indicates a hazardous situation which, if not avoided, could result in death or serious injury.**

CAUTION **Indicates a hazardous situation which, if not avoided, could result in minor or moderate injury.**

NOTICE Indicates practices not related to personal injury.

1.1.1 General cautions and warnings

The following general safety precautions and warnings apply.

DANGER **Ensure that all connections to the product are correct so as to avoid accidental risk of shock and/or fire, for example such as can arise from high voltage connected to low voltage terminals.**

Follow the requirements of this manual, including adequate wiring size and type, terminal torque settings, voltage, current magnitudes applied, and adequate isolation/clearance in external wiring from high to low voltage circuits.

Use the device only for its intended purpose and application.

Ensure that all ground paths are uncompromised for safety purposes during device operation and service.

Ensure that the control power applied to the device, the alternating current (AC), and voltage input match the ratings specified on the relay nameplate. Do not apply current or voltage in excess of the specified limits.

Only qualified personnel are to operate the device. Such personnel must be thoroughly familiar with all safety cautions and warnings in this manual and with applicable country, regional, utility, and plant safety regulations.

Hazardous voltages can exist in the power supply and at the device connection to current transformers, voltage transformers, control, and test circuit terminals. Make sure all sources of such voltages are isolated prior to attempting work on the device.

Hazardous voltages can exist when opening the secondary circuits of live current transformers. Make sure that current transformer secondary circuits are shorted out before making or removing any connection to the current transformer (CT) input terminals of the device.

For tests with secondary test equipment, ensure that no other sources of voltages or currents are connected to such equipment and that trip and close commands to the circuit breakers or other switching apparatus are isolated, unless this is required by the test procedure and is specified by appropriate utility/plant procedure.

When the device is used to control primary equipment, such as circuit breakers, isolators, and other switching apparatus, all control circuits from the device to the primary equipment must be isolated while personnel are working on or around this primary equipment to prevent any inadvertent command from this device.

Use an external disconnect to isolate the mains voltage supply.

Personal safety can be affected if the product is physically modified by the end user. Modifications to the product outside of recommended wiring configuration, hardware, or programming boundaries is not recommended end-use practice. Product disassembly and repairs are not permitted. All service needs to be conducted by the factory.

⚠CAUTION **LED transmitters are classified as IEC 60825-1 Accessible Emission Limit (AEL) Class 1M. Class 1M devices are considered safe to the unaided eye. Do not view directly with optical instruments.**

NOTICE This product is rated to Class A emissions levels and is to be used in Utility, Substation Industrial environments. Not to be used near electronic devices rated for Class B levels.

1.2 For further assistance

For product support, contact the information and call center as follows:

GE Grid Solutions
650 Markland Street
Markham, Ontario
Canada L6C 0M1
Worldwide telephone: +1 905 927 7070
Europe/Middle East/Africa telephone: +34 94 485 88 54
North America toll-free: 1 800 547 8629
Fax: +1 905 927 5098
Worldwide e-mail: multilin.tech@ge.com
Europe e-mail: multilin.tech.euro@ge.com
Website: http://www.gegridsolutions.com/multilin

When contacting GE by e-mail, optionally include a device information file, which is generated in the EnerVista software by clicking the **Service Report** button. The service report also can be generated in the field, for example with a USB cable connected between the graphical front panel and a computer, and the Device Setup configured for the USB connection.

Figure 1-1: Generate service report in EnerVista software

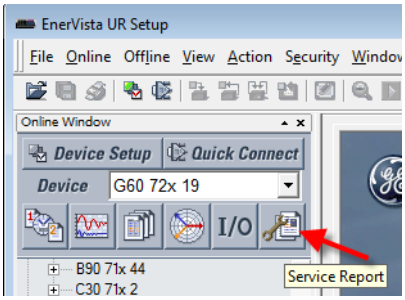

N60 Network Stability and Synchrophasor Measurement System

Chapter 2: Product description

This chapter outlines the product, order codes, and specifications.

2.1 Product description

The N60 Network Stability and Synchrophasor Measurement System is part of the Universal Relay (UR) family of products. It is a microprocessor-based device for load shedding and special protection schemes.

With its modular architecture, the N60 can be configured to monitor from one through six three-phase power circuits. The relay provides a variety of metering functions, including the following: active, reactive, and apparent power on a per-phase and three-phase basis; true RMS value, phasors, and symmetrical components of currents and voltages; and power factor and frequency. The latter can be measured independently and simultaneously from up to six signals.

The N60 allows interfacing with other analog signals via optional transducer modules to monitor equipment temperature, transformer tap positions, weather data, and other information.

In addition to standard communications protocols that can be exercised simultaneously and independently over a range of communication ports, including the redundant Ethernet port, the relay supports an independent mechanism for direct, fast, and secure digital inter-intelligent electronic device (IED) communications. This allows both reduced wiring and development time for all local connections in a substation, as well as building wide-area protection and control schemes.

Up to 64 on/off signals can be exchanged between any two N60 devices via digital communications. The relays can be configured in rings with up to 16 devices each using direct fiber (C37.94), G.704, and RS422 interfaces. An optional redundant (dual-channel) communication card supports combinations of the three interfaces allowing different physical connections in each channel. Dual-ring communication architecture can be selected for redundancy. Open ring or crossover configurations can be utilized to increase the number of devices in the scheme.

The effective message delivery time depends of the number of other N60 devices located between the sending and receiving IEDs. A two-cycle or one-cycle worst-case message delivery times can be comfortably achieved for comparatively large N60 schemes.

Sophisticated self-monitoring and diagnostic functions are incorporated, such as 32-bit cyclic redundancy code (CRC), unreturned messages count, and lost packets count. The N60 supports both multiplexed and direct fiber (up to 100 km) inter-substation connections.

The N60 allows sending and receiving any analog value measured by the relay using the dedicated inter-IED communication mechanisms. Power, voltage, and current magnitudes, frequency, transducer inputs and other values can be freely configured for the inter-IED exchanges. The analog values are transmitted with the eight-bit resolution. Upon reception, any remote analog value can be re-sent, compared with another value or a constant threshold, added to or

subtracted from another local or remote analog value, subjected to the rate-of-change monitoring, and so on. This powerful feature allows advanced applications, such as balancing power over wide areas, or adding extra security by comparing local and remote measurements for consistency. It also facilitates simple telemetry.

Diagnostic features include an event recorder capable of storing 1024 time-tagged events, oscillography capable of storing up to 64 records with programmable trigger, content, and sampling rate, plus data logger acquisition of up to 16 channels, with programmable content and sampling rate. The internal clock used for time-tagging can be synchronized with an IRIG-B signal, using the Simple Network Time Protocol (SNTP) over the Ethernet port, or using the Precision Time Protocol (PTP). This precise time stamping allows the sequence of events to be determined throughout the system. Events can also be programmed (via FlexLogic equations) to trigger oscillography data capture that can be set to record the measured parameters before and after the event for viewing on a computer. These tools significantly reduce troubleshooting time and simplify report generation in the event of a system fault.

Several options are available for communication. An RS232 port (USB port with the graphical front panel) can be used to connect to a computer to program settings and monitor actual values. The rear RS485 port allows independent access by operating and engineering staff. It can be connected to system computers with baud rates up to 115.2 kbps. All serial ports use the Modbus RTU protocol. The IEC 60870-5-103 protocol is supported on the RS485 interface. IEC 60870-5-103, DNP, and Modbus cannot be enabled simultaneously on this interface. Also only one of the DNP, IEC 60870-5-103, and IEC 60870-5-104 protocols can be enabled at any time on the relay. When the IEC 60870-5-103 protocol is chosen, the RS485 port has a fixed even parity and the baud rate can be either 9.6 kbps or 19.2 kbps. The 100Base-FX or 100Base-T Ethernet interface provides fast, reliable communications in noisy environments. The Ethernet port supports MMS/UCA2, IEC 61850-90-5, Modbus/TCP, TFTP, and PTP (according to IEEE Std. 1588-2008 or IEC 61588:2009(E)) protocols, and it allows access to the relay via any standard web browser (N60 web pages). The IEC 60870-5-104 protocol is supported on the Ethernet port. The Ethernet port also supports the Parallel Redundancy Protocol (PRP) of IEC 62439-3 (clause 4, 2012) when purchased as an option.

GOOSE and secure Routable GOOSE (R-GOOSE) are supported with software options. Process Bus GOOSE is supported with a hardware module and software options.

With a Process Bus Module that supports IEC 61850-9-2LE and IEC 61869, PRP is supported on two Ethernet ports to IEC 62439, and High-availability Seamless Redundancy (HSR) is supported on four Ethernet ports for dual HSR ring architecture.

Settings and actual values can be accessed from the front panel or EnerVista software.

The N60 uses flash memory technology that allows field upgrading as new features are added. Firmware and software are upgradable.

The following single-line diagram illustrates the relay functionality using American National Standards Institute (ANSI) device numbers.

Table 2-1: ANSI device numbers and functions

Device number	Function
25	Synchrocheck
27P	Phase undervoltage
32	Sensitive directional power
49	Thermal overload protection
50DD	Disturbance detector
50G	Ground instantaneous overcurrent
50N	Neutral instantaneous overcurrent
50P	Phase instantaneous overcurrent
51G	Ground time overcurrent

Device number	Function
51N	Neutral time overcurrent
51P	Phase time overcurrent
59P	Phase overvoltage
67N	Neutral directional overcurrent
67P	Phase directional overcurrent
68	Power swing blocking
81O	Overfrequency
81R	Rate of change frequency
81U	Underfrequency

Figure 2-1: Single-line diagram

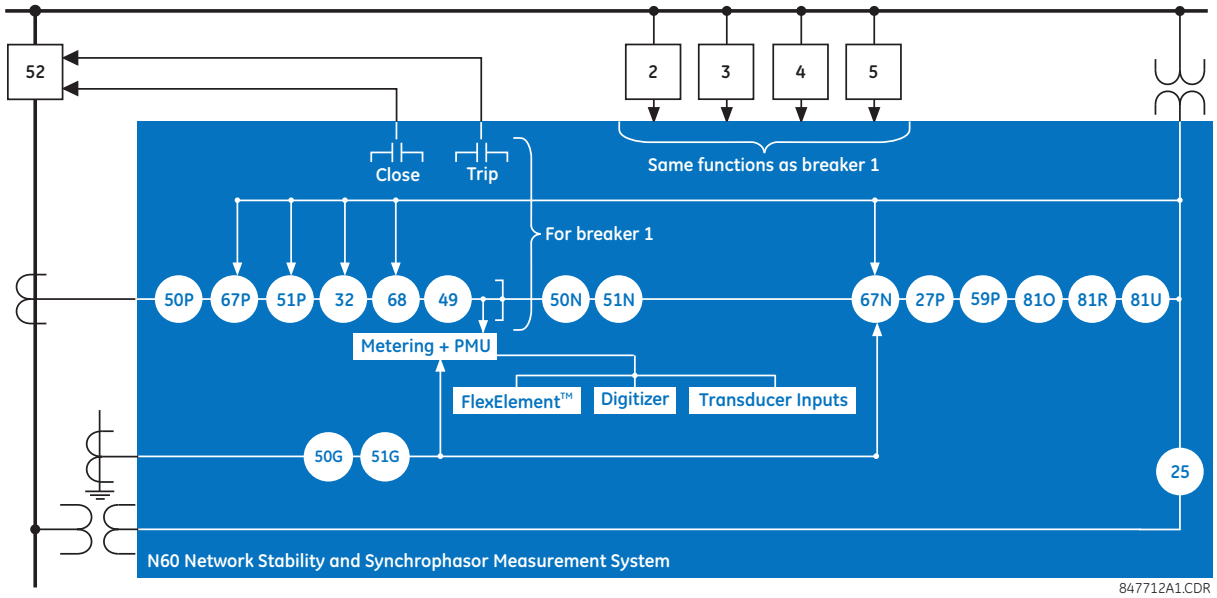

Table 2-2: Other device functions

Function	Function	Function
Breaker control	Event recorder	Synchrophasors (PMUs)
Contact inputs (up to 120)	FlexElements™ (16)	Teleprotection inputs and outputs
Contact outputs (up to 72)	FlexLogic equations	Time synchronization over IRIG-B or IEEE 1588
Control pushbuttons	Generic comparator	Time synchronization over SNTP
CT failure detector	Metering: current, demand, energy, frequency, power, power factor, voltage, harmonics, THD	Transducer inputs and outputs
CyberSentry™ security	IEC 60870-5-103 communications	Trip output
Data logger	IEC 61850 communications	User-definable displays
Digital counters (8)	IEC 62351-9 data and communications security	User-definable fault reports
Digital elements (96)	Modbus communications	User-programmable LEDs
Digitizer	Modbus user map	User-programmable pushbuttons
Direct analog inputs and outputs (32)	Non-volatile latches	User-programmable self-tests
Direct inputs and outputs (64)	Non-volatile selector switch	Virtual inputs (128)
Disconnect switches	Open pole detect	Virtual outputs (256)
DNP 3.0 or IEC 60870-5-104 protocol	Oscillography	VT fuse failure
Eight-bit switch	Setting groups (6)	

2.2 Security

The following security features are available:

- Password security — Basic security present by default
- EnerVista security — Role-based access to various EnerVista software screens and configuration elements. The feature is present by default in the EnerVista software.

- CyberSentry security — Advanced security available using a software option. When purchased, the option is enabled automatically, and the default Password security and EnerVista security are disabled.

To maximize security, see the UR Family Secure Deployment Guide.

2.2.0.1 EnerVista security

The EnerVista security management system is a role-based access control (RBAC) system that allows an administrator to manage the privileges of multiple users. This allows for access control of UR devices by multiple personnel within a substation and conforms to the principles of RBAC as defined in ANSI INCITS 359-2004. The EnerVista security management system is disabled by default to allow the administrator direct access to the EnerVista software after installation. It is recommended that security be enabled before placing the device in service.

Basic password or enhanced CyberSentry security applies, depending on purchase.

From EnerVista UR Setup version 8.50, the user management is removed under Admin menu. The **Login User** is for Factory login only.

2.2.0.2 Password security

Password security is a basic security feature present by default.

Two levels of password security are provided: command and setting. Use of a password for each level controls whether all users can enter commands and/or change settings.

Two types of connection security are provided: password entry from local or remote connection. Local access is defined as access to settings or commands via the front panel interface. This includes both keypad entry and the through a front panel port. Remote access is defined as access to settings or commands via any rear communications port. This includes both Ethernet and RS485 connections. These two settings are on by default and apply to all users.

When entering a settings or command password via EnerVista or any serial interface, the user must enter the corresponding connection password. If the connection is to the back of the N60, the remote password is used. If the connection is to a front panel port, the local password applies. (These two local and remote password settings are not shown in the figure.)

Password access events are logged in the Event Recorder.

Figure 2-2: Access control by passwords and connection type

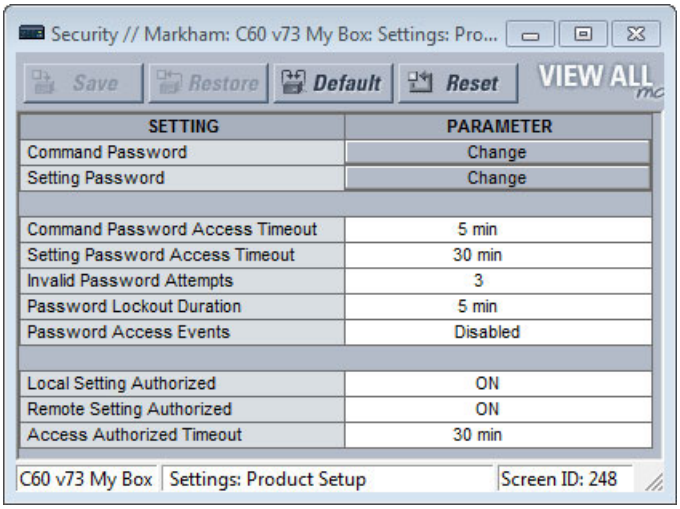

2.2.0.3 CyberSentry security

CyberSentry security is available using software options that provide advanced security. When the option is purchased, the basic password security is disabled automatically.

CyberSentry provides security through the following features:

- An Authentication, Authorization, Accounting (AAA) Remote Authentication Dial-In User Service (RADIUS) client that is managed centrally, enables user attribution, provides accounting of all user activities, and uses secure standards-based strong cryptography for authentication and credential protection. In other words, this option uses a RADIUS server for user authentication.
- A Role-Based Access Control (RBAC) system that provides a permission model that allows access to UR device operations and configurations based on specific roles and individual user accounts configured on the AAA server. That is, Administrator, Supervisor, Engineer, Operator, and Observer roles are used.
- Security event reporting through the Syslog protocol for supporting Security Information Event Management (SIEM) systems for centralized cybersecurity monitoring
- Strong encryption of all access and configuration network messages between the EnerVista software and UR devices using the Secure Shell (SSH) protocol, the Advanced Encryption Standard (AES), and 128-bit keys in Galois Counter Mode (GCM) as specified in the U.S. National Security Agency Suite B extension for SSH and approved by the National Institute of Standards and Technology (NIST) FIPS-140-2 standards for cryptographic systems

CyberSentry user roles

CyberSentry user roles (Administrator, Supervisor, Engineer, Operator, Observer) limit the levels of access to various UR functions. This means that the EnerVista software allows for access to functionality based on the user's logged in role.

Example: Administrative functions can be segmented from common operator functions, or engineering type access, all of which are defined by separate roles so that access of UR devices by multiple personnel within a substation is allowed.

One role of one type is allowed to be logged in at a time. For example, one Operator can be logged in but not a second Operator at the same time. This prevents subsets of settings from being changed at the same time.

Figure 2-3: CyberSentry user roles

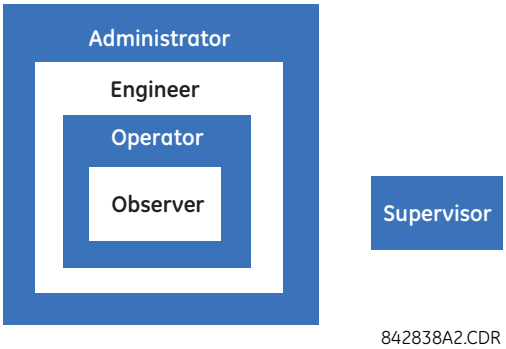

The table lists user roles and permissions.

Table 2-3: Permissions by user role with CyberSentry

	Administrator	Engineer	Operator	Supervisor	Observer
Summary	Complete access	Complete access except for CyberSentry Security	Command menu	Authorizes writing	Default role
Device Definition	R	R	R	R	R
Settings					
|--------- Product Setup					
|---------- Security (CyberSentry)	RW	R	R	R	R
|---------- Supervisory	See table notes	R	R	See table notes	R
|---------- Display Properties	RW	RW	R	R	R

2

	Administrator	Engineer	Operator	Supervisor	Observer
|---------- Clear Relay Records (settings)	RW	RW	R	R	R
|---------- Communications	RW	RW	R	R	R
|---------- Modbus User Map	RW	RW	R	R	R
|---------- Real Time Clock	RW	RW	R	R	R
|---------- Oscillography	RW	RW	R	R	R
|---------- Data Logger	RW	RW	R	R	R
|---------- Demand	RW	RW	R	R	R
|---------- User-Programmable LEDs	RW	RW	R	R	R
|---------- User-Programmable Self Tests	RW	RW	R	R	R
|---------- Control Pushbuttons	RW	RW	R	R	R
|---------- User-Programmable Pushbuttons	RW	RW	R	R	R
|---------- Flex state Parameters	RW	RW	R	R	R
|---------- User-Definable Displays	RW	RW	R	R	R
|---------- Direct I/O	RW	RW	R	R	R
|---------- Teleprotection	RW	RW	R	R	R
|---------- Installation	RW	RW	R	R	R
|---------- System Setup	RW	RW	R	R	R
|---------- FlexLogic	RW	RW	R	R	R
|---------- Grouped Elements	RW	RW	R	R	R
|---------- Control Elements	RW	RW	R	R	R
|---------- Inputs / Outputs	RW	RW	R	R	R
|---------- Contact Inputs	RW	RW	R	R	R
|---------- Contact Input threshold	RW	RW	R	R	R
|---------- Virtual Inputs	RW	RW	R	R	R
|---------- Contact Outputs	RW	RW	R	R	R
|---------- Virtual Outputs	RW	RW	R	R	R
|---------- Resetting	RW	RW	R	R	R
|---------- Direct Inputs	RW	RW	R	R	R
|---------- Direct Outputs	RW	RW	R	R	R
|---------- Teleprotection	RW	RW	R	R	R
|---------- Direct Analogs	RW	RW	R	R	R
|---------- Direct Integers	RW	RW	R	R	R
|---------- Transducer I/O	RW	RW	R	R	R
|---------- Testing	RW	RW	R	R	R
|---------- Front Panel Label Designer	NA	NA	NA	NA	NA
|---------- Protection Summary	NA	NA	NA	NA	NA
Commands	RW	RW	RW	R	R
|---------- Virtual Inputs	RW	RW	RW	R	R
|---------- Clear Records	RW	RW	RW	R	R
|---------- Set Date and Time	RW	RW	RW	R	R
User Displays	R	R	R	R	R
Targets	R	R	R	R	R

	Administrator	Engineer	Operator	Supervisor	Observer
Actual Values	R	R	R	R	R
|---------- Front Panel	R	R	R	R	R
|---------- Status	R	R	R	R	R
|---------- Metering	R	R	R	R	R
|---------- Transducer I/O	R	R	R	R	R
|---------- Records	R	R	R	R	R
|---------- Product Info	R	R	R	R	R
Maintenance	RW	RW	R	R	R
|---------- Modbus Analyzer	NA	NA	NA	NA	NA
|---------- Change front panel	RW	RW	RW	R	R
|---------- Update firmware	Yes	No	No	No	No
|---------- Retrieve file	Yes	No	No	No	No

Table Notes:

RW = read and write access

R = read access

Supervisor = RW (default), Administrator = R (default), Administrator = RW (only if Supervisor role is disabled)

NA = the permission is not enforced by CyberSentry security

CyberSentry user authentication

The following types of authentication are supported by CyberSentry to access the UR device:

- Device Authentication (local UR device authenticates)
- Server Authentication (RADIUS server authenticates)

The EnerVista software allows access to functionality that is determined by the user role, which comes either from the local UR device or the RADIUS server.

The EnerVista software has a device authentication option on the login screen for accessing the UR device. When the "Device" button is selected, the UR uses its local authentication database and not the RADIUS server to authenticate the user. In this case, it uses its built-in roles (Administrator, Engineer, Supervisor, Observer, Operator, or Administrator and Supervisor when Device Authentication is disabled) as login names and the associated passwords are stored on the UR device. As such, when using the local accounts, access is not user-attributable.

In cases where user-attributable access is required especially to facilitate auditable processes for compliance reasons, use RADIUS authentication.

When the "Server" Authentication Type option is selected, the UR uses the RADIUS server and not its local authentication database to authenticate the user.

No password or security information is displayed in plain text by the EnerVista software or UR device, nor is such information ever transmitted without cryptographic protection.

CyberSentry server authentication

The UR has been designed to direct automatically the authentication requests based on user names. In this respect, local account names on the UR are considered as reserved and not used on a RADIUS server.

The UR detects automatically whether an authentication request is to be handled remotely or locally. As there are five local accounts possible on the UR, if the user ID credential does not match one of the five local accounts, the UR forwards automatically the request to a RADIUS server when one is provided.

If a RADIUS server is provided, but is unreachable over the network, server authentication requests are denied. In this situation, use local UR accounts to gain access to the UR system.

2

2.3 Order codes

The order code is on the product label and indicates the product options applicable.

The N60 is available as a 19-inch rack horizontal mount and consists of the following modules: power supply, CPU, CT/VT, contact input and output, transducer input and output, and inter-relay communications. Module options are specified at the time of ordering.

Order codes are subject to change without notice. See the web page for the product for the latest options.

The letters in the top row of the tables correspond to slots in the UR chassis, for example slot F, H, or U.

NOTE

The R-GOOSE protocol described in IEC 61850-8-1 is available through the IEC 61850 software option. R-GOOSE security requires the CyberSentry software option.

Process Bus GOOSE requires an IEC 61850-9-2LE / IEC 61869 Process Bus Module, as well as IEC 61850, PRP, and IEEE 1588 software options.

For Japanese, the settings display in Japanese on the graphical front panel, while the keys printed on the panel are in English.

2.3.1 Order codes with enhanced CT/VT modules

Table 2-4: N60 order codes

	N60 - * ** - * * * - F ** - H ** - M ** - P ** - U ** - W/X **	Full Size Horizontal Mount
BASE UNIT	N60	Base Unit
CPU	T	RS485 and Three Multi-mode fiber 100Base-FX (SFP with LC)
	U	RS485 and Two Multi-mode fiber 100Base-FX (SFP with LC), One 10/100Base-TX (SFP with RJ45)
	V	RS485 and Three 10/100Base-TX (SFP with RJ45)
	W	RS485 with Two 100Base-FX Ethernet, multimode ST + 10/100Base-TX Ethernet, RJ-45
SOFTWARE OPTIONS	00	No software options
	03	IEC 61850
	06	Phasor measurement unit (PMU)
	07	IEC 61850 and phasor measurement unit (PMU)
	14	Two phasor measurement units (PMUs)
	15	IEC 61850 and two phasor measurement units (PMUs)
	16	Four phasor measurement units (PMUs)
	17	IEC 61850 and four phasor measurement units (PMUs)
	A0	CyberSentry Lvl 1
	A3	CyberSentry Lvl 1 and IEC 61850
	A6	CyberSentry Lvl 1 and phasor measurement unit (PMU)
	A7	CyberSentry Lvl 1 and IEC 61850 and phasor measurement unit (PMU)
	AE	CyberSentry Lvl 1 and two phasor measurement units (PMUs)
	AF	CyberSentry Lvl 1 and IEC 61850 and two phasor measurement units (PMUs)
	AG	CyberSentry Lvl 1 and four phasor measurement units (PMUs)
	AH	CyberSentry Lvl 1 and IEC 61850 and four phasor measurement units (PMUs)
	B0	IEEE 1588
	B3	IEEE 1588 and IEC 61850
	B6	IEEE 1588 and phasor measurement unit (PMU)
	B7	IEEE 1588 and IEC 61850 and phasor measurement unit (PMU)
	BE	IEEE 1588 and two phasor measurement units (PMUs)
	BF	IEEE 1588 and IEC 61850 and two phasor measurement units (PMUs)
	BG	IEEE 1588 and four phasor measurement units (PMUs)
	BH	IEEE 1588 and IEC 61850 and four phasor measurement units (PMUs)
	C0	Parallel Redundancy Protocol (PRP)
	C3	PRP and IEC 61850
	C6	PRP and PMU
	C7	PRP, IEC 61850, and PMU
	CE	PRP and two PMUs
	CF	PRP, IEC 61850, and two PMUs
	CG	PRP and four PMUs
	CH	PRP, IEC 61850, and four PMUs
	D0	IEEE 1588 and CyberSentry Lvl 1
	D3	IEEE 1588 and CyberSentry Lvl 1 and IEC 61850
	D6	IEEE 1588 and CyberSentry Lvl 1 and phasor measurement unit (PMU)
	D7	IEEE 1588 and CyberSentry Lvl 1 and IEC 61850 and phasor measurement unit (PMU)
	DE	IEEE 1588 and CyberSentry Lvl 1 and two phasor measurement units (PMUs)
	DF	IEEE 1588 and CyberSentry Lvl 1 and IEC 61850 and two phasor measurement units (PMUs)
	DG	IEEE 1588 and CyberSentry Lvl 1 and four phasor measurement units (PMUs)
	DH	IEEE 1588 and CyberSentry Lvl 1 and IEC 61850 and four phasor measurement units (PMUs)
	E0	IEEE 1588 and PRP
	E3	IEEE 1588, PRP, and IEC 61850
	E6	IEEE 1588, PRP, and PMU
	E7	IEEE 1588, PRP, IEC 61850, and PMU
	EE	IEEE 1588, PRP, and two PMUs
	EF	IEEE 1588, PRP, IEC 61850, and two PMUs
	EG	IEEE 1588, PRP, and four PMUs
	EH	IEEE 1588, PRP, IEC 61850, and four PMUs
	F0	PRP and CyberSentry Lvl1
	F3	PRP, CyberSentry Lvl 1, and IEC 61850
	F6	PRP, CyberSentry Lvl 1, and PMU

N60 - * ** - * * * - F ** - H ** - M ** - P ** - U ** - W/X **	Full Size Horizontal Mount
F7	PRP, CyberSentry Lvl 1, IEC 61850, and PMU
FE	PRP, CyberSentry Lvl 1, and two PMUs
FF	PRP, CyberSentry Lvl 1, IEC 61850, and two PMUs
FG	PRP, CyberSentry Lvl 1, and four PMUs
FH	PRP, CyberSentry Lvl 1, IEC 61850, and four PMUs
G0	IEEE 1588, PRP, and CyberSentry Lvl 1
G3	IEEE 1588, PRP, CyberSentry Lvl 1, and IEC 61850
G6	IEEE 1588, PRP, CyberSentry Lvl 1, and PMU
G7	IEEE 1588, PRP, CyberSentry Lvl 1, IEC 61850, and PMU
GE	IEEE 1588, PRP, CyberSentry Lvl 1, two PMUs
GF	IEEE 1588, PRP, CyberSentry Lvl 1, IEC 61850, and two PMUs
GG	IEEE 1588, PRP, CyberSentry Lvl 1, four PMUs
GH	IEEE 1588, PRP, CyberSentry Lvl 1, IEC 61850, and four PMUs
I0	Six PMUs
I1	Six PMUs + IEC 61850
I2	Six PMUs + CyberSentry Lvl 1
I3	Six PMUs + IEC 61850 + CyberSentry Lvl 1
I4	Six PMUs + IEEE 1588
I5	Six PMUs + IEEE 1588 + IEC 61850
I6	Six PMUs + PRP
I7	Six PMUs + PRP + IEC 61850
I8	Six PMUs + IEEE 1588 + CyberSentry Lvl 1
I9	Six PMUs + IEEE 1588 + CyberSentry Lvl 1 + IEC 61850
IA	Six PMUs + PRP + IEEE 1588
IB	Six PMUs + PRP + IEEE 1588 + IEC 61850
IC	Six PMUs + PRP + CyberSentry Lvl 1
ID	Six PMUs + PRP + CyberSentry Lvl 1 + IEC 61850
IE	Six PMUs + PRP + CyberSentry Lvl 1 + IEEE 1588
IF	Six PMUs + PRP + CyberSentry Lvl 1 + IEEE 1588 + IEC 61850
IG	Six PMUs + IEC 60870-5-103
IH	Six PMUs + IEC 60870-5-103 + IEC 61850
II	Six PMUs + IEC 60870-5-103 + PRP + IEEE 1588
IJ	Six PMUs + IEC 60870-5-103 + PRP + IEEE 1588 + IEC 61850
IK	Six PMUs + IEC 60870-5-103 + PRP + IEEE 1588 + CyberSentry Lvl 1
IL	Six PMUs + IEC 60870-5-103 + PRP + IEEE 1588 + CyberSentry Lvl 1 + IEC 61850
J0	IEC 60870-5-103
J3	IEC 60870-5-103 + IEC 61850
J6	IEC 60870-5-103 + PMU
J7	IEC 60870-5-103 + IEC 61850 + PMU
JE	IEC 60870-5-103 + two PMUs
JF	IEC 60870-5-103 + IEC 61850 + two PMUs
JG	IEC 60870-5-103 + four PMUs
JH	IEC 60870-5-103 + IEC 61850 + four PMUs
K0	IEEE 1588 + PRP + IEC 60870-5-103
K3	IEEE 1588 + PRP + IEC 60870-5-103 + IEC 61850
K6	IEEE 1588 + PRP + IEC 60870-5-103 + PMU
K7	IEEE 1588 + PRP + IEC 60870-5-103 + IEC 61850 + PMU
KE	IEEE 1588 + PRP + IEC 60870-5-103 + two PMUs
KF	IEEE 1588 + PRP + IEC 60870-5-103 + IEC 61850 + two PMUs
KG	IEEE 1588 + PRP + IEC 60870-5-103 + four PMUs
KH	IEEE 1588 + PRP + IEC 60870-5-103 + IEC 61850 + four PMUs
L0	IEC 60870-5-103 + IEEE 1588 + PRP + CyberSentry Lvl 1
L3	IEC 60870-5-103 + IEEE 1588 + PRP + CyberSentry Lvl 1 + IEC 61850
L6	IEC 60870-5-103 + IEEE 1588 + PRP + CyberSentry Lvl 1 + PMU
L7	IEC 60870-5-103 + IEEE 1588 + PRP + CyberSentry Lvl 1 + IEC 61850 + PMU
LE	IEC 60870-5-103 + IEEE 1588 + PRP + CyberSentry Lvl 1 + two PMUs
LF	IEC 60870-5-103 + IEEE 1588 + PRP + CyberSentry Lvl 1 + IEC 61850 + two PMUs
LG	IEC 60870-5-103 + IEEE 1588 + PRP + CyberSentry Lvl 1 + four PMUs
LH	IEC 60870-5-103 + IEEE 1588 + PRP + CyberSentry Lvl 1 + IEC 61850 + four PMUs
M0	IEC 61850 + PMU + 61850-90-5
M2	IEC 61850 + 2 x PMU + 61850-90-5
M3	IEC 61850 + 4 x PMU + 61850-90-5
M7	CyberSentry UR Lvl 1 + IEC 61850 + PMU + 61850-90-5
M9	CyberSentry UR Lvl 1 + IEC 61850 + 2 x PMU + 61850-90-5
MA	CyberSentry UR Lvl 1 + IEC 61850 + 4 x PMU + 61850-90-5
MD	IEEE 1588 + IEC 61850 + PMU + 61850-90-5
MF	IEEE 1588 + IEC 61850 + 2 x PMU + 61850-90-5
MG	IEEE 1588 + IEC 61850 + 4 x PMU + 61850-90-5
MJ	PRP + IEC 61850 + PMU + 61850-90-5
ML	PRP + IEC 61850 + 2 x PMU + 61850-90-5
MM	PRP + IEC 61850 + 4 x PMU + 61850-90-5
MP	IEEE 1588 + CyberSentry UR Lvl 1 + IEC 61850 + PMU + 61850-90-5
MR	IEEE 1588 + CyberSentry UR Lvl 1 + IEC 61850 + 2 x PMU + 61850-90-5
MS	IEEE 1588 + CyberSentry UR Lvl 1 + IEC 61850 + 4 x PMU + 61850-90-5
MV	IEEE 1588 + PRP + IEC 61850 + PMU + 61850-90-5
MX	IEEE 1588 + PRP + IEC 61850 + 2 x PMU + 61850-90-5
MY	IEEE 1588 + PRP + IEC 61850 + 4 x PMU + 61850-90-5
N1	PRP + CyberSentry UR Lvl 1 + IEC 61850 + PMU + 61850-90-5
N3	PRP + CyberSentry UR Lvl 1 + IEC 61850 + 2 x PMU + 61850-90-5
N4	PRP + CyberSentry UR Lvl 1 + IEC 61850 + 4 x PMU + 61850-90-5
N7	IEEE 1588 + PRP + CyberSentry UR Lvl 1 + IEC 61850 + PMU + 61850-90-5
N9	IEEE 1588 + PRP + CyberSentry UR Lvl 1 + IEC 61850 + 2 x PMU + 61850-90-5
NA	IEEE 1588 + PRP + CyberSentry UR Lvl 1 + IEC 61850 + 4 x PMU + 61850-90-5
ND	IEC 60870-5-103 + IEC 61850 + PMU + 61850-90-5
NF	IEC 60870-5-103 + IEC 61850 + 2 x PMU + 61850-90-5
NG	IEC 60870-5-103 + IEC 61850 + 4 x PMU + 61850-90-5
NJ	IEEE 1588 + PRP + IEC 60870-5-103 + IEC 61850 + PMU + 61850-90-5
NL	IEEE 1588 + PRP + IEC 60870-5-103 + IEC 61850 + 2 x PMU + 61850-90-5
NM	IEEE 1588 + PRP + IEC 60870-5-103 + IEC 61850 + 4 x PMU + 61850-90-5
NP	IEC 60870-5-103 + IEEE 1588 + PRP + CyberSentry UR Lvl 1 + IEC 61850 + PMU + 61850-90-5
NR	IEC 60870-5-103 + IEEE 1588 + PRP + CyberSentry UR Lvl 1 + IEC 61850 + 2 x PMU + 61850-90-5
NS	IEC 60870-5-103 + IEEE 1588 + PRP + CyberSentry UR Lvl 1 + IEC 61850 + 4 x PMU + 61850-90-5
O4	6 x PMU + IEC 61850 + 61850-90-5
O5	CyberSentry UR Lvl 1 + 6 x PMU + IEC 61850 + 61850-90-5
O6	IEEE 1588 + 6 x PMU + IEC 61850 + 61850-90-5
O7	PRP + 6 x PMU + IEC 61850 + 61850-90-5
O8	IEEE 1588 + CyberSentry UR Lvl 1 + 6 x PMU + IEC 61850 + 61850-90-5
O9	IEEE 1588 + PRP + 6 x PMU + IEC 61850 + 61850-90-5
OA	PRP + CyberSentry UR Lvl 1 + 6 x PMU + IEC 61850 + 61850-90-5
OB	IEEE 1588 + PRP + CyberSentry UR Lvl 1 + 6 x PMU + IEC 61850 + 61850-90-5

2

N60	- *	**	- *	*	*	- F **	- H **	- M **	- P **	- U **	- W/X **		Full Size Horizontal Mount
		OC											IEC 60870-5-103 + 6 x PMU + IEC 61850 + 61850-90-5
		OD											IEC 60870-5-103 + IEEE 1588 + PRP + 6 x PMU + IEC 61850 + 61850-90-5
		OE											IEC 60870-5-103 + IEEE 1588 + PRP + CyberSentry UR Lvl 1 + 6 x PMU + IEC 61850 + 61850-90-5
		SA											IEC 60870-5-103 + IEEE 1588 + PRP + IEC 61850 + CyberSentry UR Lvl 1 + MSOD
		SB											IEC 60870-5-103 + IEEE 1588 + PRP + IEC 61850 + CyberSentry UR Lvl 1 + MSOD + PMU + IEC 61850-90-5
		SC											IEC 60870-5-103 + IEEE 1588 + PRP + IEC 61850 + CyberSentry UR Lvl 1 + MSOD + 2 x PMU + IEC 61850-90-5
		SD											IEC 60870-5-103 + IEEE 1588 + PRP + IEC 61850 + CyberSentry UR Lvl 1 + MSOD + 4 x PMU + IEC 61850-90-5
		SE											IEC 60870-5-103 + IEEE 1588 + PRP + IEC 61850 + CyberSentry UR Lvl 1 + MSOD + 6 x PMU + IEC 61850-90-5
		T8											IEC 60870-5-103 + IEEE 1588 + PRP + IEC 61850 + MSOD
		T9											IEC 60870-5-103 + IEEE 1588 + PRP + IEC 61850 + MSOD + PMU + IEC 61850-90-5
		TA											IEC 60870-5-103 + IEEE 1588 + PRP + IEC 61850 + MSOD + 2 x PMU + IEC 61850-90-5
		TB											IEC 60870-5-103 + IEEE 1588 + PRP + IEC 61850 + MSOD + 4 x PMU + IEC 61850-90-5
		TC											IEC 60870-5-103 + IEEE 1588 + PRP + IEC 61850 + MSOD + 6 x PMU + IEC 61850-90-5
MOUNT/COATING			H										Horizontal (19" rack)
			A										Horizontal (19" rack) with harsh environmental coating
FRONT PANEL + INTERFACE				C									English display
				D									French display
				R									Russian display
				P									English display with 4 small and 12 large programmable pushbuttons
				G									French display with 4 small and 12 large programmable pushbuttons
				S									Russian display with 4 small and 12 large programmable pushbuttons
				K									Enhanced front panel with English display
				M									Enhanced front panel with French display
				Q									Enhanced front panel with Russian display
				U									Enhanced front panel with Chinese display
				L									Enhanced front panel with English display and user-programmable pushbuttons
				N									Enhanced front panel with French display and user-programmable pushbuttons
				T									Enhanced front panel with Russian display and user-programmable pushbuttons
				V									Enhanced front panel with Chinese display and user-programmable pushbuttons
				W									Enhanced front panel with Turkish display
				Y									Enhanced front panel with Turkish display and user-programmable pushbuttons
				I									Enhanced front panel with German display
				J									Enhanced front panel with German display and user-programmable pushbuttons
				H									Enhanced front panel with Polish display
				O									Enhanced front panel with Polish display and user-programmable pushbuttons
				E									7" Graphical front panel display in multiple languages with USB front port and programmable pushbuttons (English, French, Chinese, Russian, Turkish, German, Polish, Japanese)
POWER SUPPLY					H								125 / 250 V AC/DC power supply
(redundant supply must					H							RH	125 / 250 V AC/DC with redundant 125 / 250 V AC/DC power supply
be same type as main supply)					L								24 to 48 V (DC only) power supply
					L							RL	24 to 48 V (DC only) with redundant 24 to 48 V DC power supply
CT/VT DSP						XX		XX		XX			No DSP module
						8L		8L		8L			Standard 4CT/4VT with enhanced diagnostics (required for PMU options)
						8N		8N		8N			Standard 8CT with enhanced diagnostics (required for PMU options)
						8V		8V		8V			Standard 8VT with enhanced diagnostics (required for PMU options)
CONTACT INPUTS/OUTPUTS								XX	XX	XX		XX	No Module
						4A	4A	4A	4A	4A		4A	4 Solid-State (no monitoring) MOSFET outputs
						4B	4B	4B	4B	4B		4B	4 Solid-State (voltage with optional current) MOSFET outputs
						4C	4C	4C	4C	4C		4C	4 Solid-State (current with optional voltage) MOSFET outputs
						4L	4L	4L	4L	4L		4L	14 Form-A (no monitoring) Latchable outputs
						67	67	67	67	67		67	8 Form-A (no monitoring) outputs
						6C	6C	6C	6C	6C		6C	8 Form-C outputs
						6D	6D	6D	6D	6D		6D	16 Contact inputs
						6E	6E	6E	6E	6E		6E	4 Form-C outputs, 8 contact inputs
						6F	6F	6F	6F	6F		6F	8 Fast Form-C outputs
						6P	6P	6P	6P	6P		6P	6 Form-A (current with optional voltage) outputs, 4 contact inputs
						6R	6R	6R	6R	6R		6R	2 Form-A (no monitoring) and 2 Form-C outputs, 8 contact inputs
						6S	6S	6S	6S	6S		6S	2 Form-A (no monitoring) and 4 Form-C outputs, 4 contact inputs
						6T	6T	6T	6T	6T		6T	4 Form-A (no monitoring) outputs, 8 contact inputs
						6U	6U	6U	6U	6U		6U	6 Form-A (no monitoring) outputs, 4 contact inputs
						6V	6V	6V	6V	6V		6V	2 Form-A outputs, 1 Form-C output, 2 Form-A (no monitoring) latching outputs, 8 contact inputs
						6W	6W	6W	6W	6W		6W	30 Contact inputs - pin terminals (max 4 modules)
						6X	6X	6X	6X	6X		6X	18 Form-A (no monitoring) outputs - pin terminals (max 4 modules)
TRANSDUCER INPUTS/OUTPUTS						5A	5A	5A	5A	5A		5A	4 DCmA inputs, 4 DCmA outputs (only one 5A or 5D module is allowed)
(maximum of 3 per unit)						5C	5C	5C	5C	5C		5C	8 RTD inputs
						5D	5D	5D	5D	5D		5D	4 RTD inputs, 4 DCmA outputs (only one 5A or 5D module is allowed)
						5E	5E	5E	5E	5E		5E	4 RTD inputs, 4 DCmA inputs
						5F	5F	5F	5F	5F		5F	8 DCmA inputs
INTER-RELAY COMMUNICATIONS										2H		2H	IEEE C37.94, 820 nm, 128 kbps, multimode, LED, 2 Channels
(select a maximum of 1 per unit)										2I		2I	Channel 1 - IEEE C37.94, MM, 64/128 kbps; Channel 2 - 1300 nm, single-mode, Laser
										2J		2J	Channel 1 - IEEE C37.94, MM, 64/128 kbps; Channel 2 - 1550 nm, single-mode, Laser
										73		73	1550 nm, single-mode, Laser, 2 Channel
										76		76	IEEE C37.94, 820 nm, 64 kbps, multimode, LED, 1 Channel
										77		77	IEEE C37.94, 820 nm, 64 kbps, multimode, LED, 2 Channels
										7A		7A	820 nm, multimode, LED, 1 Channel
										7H		7H	820 nm, multimode, LED, 2 Channels
										7I		7I	1300 nm, multimode, LED, 2 Channels
										7M		7M	Channel 1 - RS422; Channel 2 - 1300 nm, multimode, LED
										7S		7S	G.703, 2 Channels
										7V		7V	RS422, 2 Channels, 2 Clock Inputs
										7W		7W	RS422, 2 Channels

2.3.2 Order codes with process bus modules

Table 2-5: N60 order codes with process bus

	N60	- * ** - * * - F ** - H ** - M ** - P ** - U ** - W/X **	Full Size Horizontal Mount
BASE UNIT	N60	|	Base Unit
CPU	T	|	Three Multi-mode fiber 100Base-FX (SFP with LC)
	U	|	Two Multi-mode fiber 100Base-FX (SFP with LC), One 10/100Base-TX (SFP with RJ45)
	V	|	Three 10/100Base-TX (SFP with RJ45)
	W	|	RS485 with Two 100Base-FX Ethernet, multimode ST + 10/100Base-TX Ethernet, RJ-45
SOFTWARE OPTIONS	00	|	No software options
	03	|	IEC 61850
	06	|	Phasor measurement unit (PMU)
	07	|	IEC 61850 and phasor measurement unit (PMU)
	14	|	Two phasor measurement units (PMUs)
	15	|	IEC 61850 and two phasor measurement units (PMUs)
	16	|	Four phasor measurement units (PMUs)
	17	|	IEC 61850 and four phasor measurement units (PMUs)
	A0	|	CyberSentry Lvl 1
	A3	|	CyberSentry Lvl 1 and IEC 61850
	A6	|	CyberSentry Lvl 1 and phasor measurement unit (PMU)
	A7	|	CyberSentry Lvl 1 and IEC 61850 and phasor measurement unit (PMU)
	AE	|	CyberSentry Lvl 1 and two phasor measurement units (PMUs)
	AF	|	CyberSentry Lvl 1 and IEC 61850 and two phasor measurement units (PMUs)
	AG	|	CyberSentry Lvl 1 and four phasor measurement units (PMUs)
	AH	|	CyberSentry Lvl 1 and IEC 61850 and four phasor measurement units (PMUs)
	B0	|	IEEE 1588
	B3	|	IEEE 1588 and IEC 61850
	B6	|	IEEE 1588 and phasor measurement unit (PMU)
	B7	|	IEEE 1588 and IEC 61850 and phasor measurement unit (PMU)
	BE	|	IEEE 1588 and two phasor measurement units (PMUs)
	BF	|	IEEE 1588 and IEC 61850 and two phasor measurement units (PMUs)
	BG	|	IEEE 1588 and four phasor measurement units (PMUs)
	BH	|	IEEE 1588 and IEC 61850 and four phasor measurement units (PMUs)
	C0	|	Parallel Redundancy Protocol (PRP)
	C3	|	PRP and IEC 61850
	C6	|	PRP and PMU
	C7	|	PRP, IEC 61850, and PMU
	CE	|	PRP and two PMUs
	CF	|	PRP, IEC 61850, and two PMUs
	CG	|	PRP and four PMUs
	CH	|	PRP, IEC 61850, and four PMUs
	D0	|	IEEE 1588 and CyberSentry Lvl 1
	D3	|	IEEE 1588 and CyberSentry Lvl 1 and IEC 61850
	D6	|	IEEE 1588 and CyberSentry Lvl 1 and phasor measurement unit (PMU)
	D7	|	IEEE 1588 and CyberSentry Lvl 1 and IEC 61850 and phasor measurement unit (PMU)
	DE	|	IEEE 1588 and CyberSentry Lvl 1 and two phasor measurement units (PMUs)
	DF	|	IEEE 1588 and CyberSentry Lvl 1 and IEC 61850 and two phasor measurement units (PMUs)
	DG	|	IEEE 1588 and CyberSentry Lvl 1 and four phasor measurement units (PMUs)
	DH	|	IEEE 1588 and CyberSentry Lvl 1 and IEC 61850 and four phasor measurement units (PMUs)
	E0	|	IEEE 1588 and PRP
	E3	|	IEEE 1588, PRP, and IEC 61850
	E6	|	IEEE 1588, PRP, and PMU
	E7	|	IEEE 1588, PRP, IEC 61850, and PMU
	EE	|	IEEE 1588, PRP, and two PMUs
	EF	|	IEEE 1588, PRP, IEC 61850, and two PMUs
	EG	|	IEEE 1588, PRP, and four PMUs
	EH	|	IEEE 1588, PRP, IEC 61850, and four PMUs
	F0	|	PRP and CyberSentry Lvl1
	F3	|	PRP, CyberSentry Lvl 1, and IEC 61850
	F6	|	PRP, CyberSentry Lvl 1, and PMU
	F7	|	PRP, CyberSentry Lvl 1, IEC 61850, and PMU
	FE	|	PRP, CyberSentry Lvl 1, and two PMUs
	FF	|	PRP, CyberSentry Lvl 1, IEC 61850, and two PMUs
	FG	|	PRP, CyberSentry Lvl 1, and four PMUs
	FH	|	PRP, CyberSentry Lvl 1, IEC 61850, and four PMUs
	G0	|	IEEE 1588, PRP, and CyberSentry Lvl 1
	G3	|	IEEE 1588, PRP, CyberSentry Lvl 1, and IEC 61850
	G6	|	IEEE 1588, PRP, CyberSentry Lvl 1, and PMU
	G7	|	IEEE 1588, PRP, CyberSentry Lvl 1, IEC 61850, and PMU
	GE	|	IEEE 1588, PRP, CyberSentry Lvl 1, two PMUs
	GF	|	IEEE 1588, PRP, CyberSentry Lvl 1, IEC 61850, and two PMUs
	GG	|	IEEE 1588, PRP, CyberSentry Lvl 1, four PMUs
	GH	|	IEEE 1588, PRP, CyberSentry Lvl 1, IEC 61850, and four PMUs
	I0	|	Six PMUs
	I1	|	Six PMUs + IEC 61850
	I2	|	Six PMUs + CyberSentry Lvl 1
	I3	|	Six PMUs + IEC 61850 + CyberSentry Lvl 1
	I4	|	Six PMUs + IEEE 1588
	I5	|	Six PMUs + IEEE 1588 + IEC 61850
	I6	|	Six PMUs + PRP
	I7	|	Six PMUs + PRP + IEC 61850
	I8	|	Six PMUs + IEEE 1588 + CyberSentry Lvl 1
	I9	|	Six PMUs + IEEE 1588 + CyberSentry Lvl 1 + IEC 61850
	IA	|	Six PMUs + PRP + IEEE 1588
	IB	|	Six PMUs + PRP + IEEE 1588 + IEC 61850
	IC	|	Six PMUs + PRP + CyberSentry Lvl 1
	ID	|	Six PMUs + PRP + CyberSentry Lvl 1 + IEC 61850
	IE	|	Six PMUs + PRP + CyberSentry Lvl 1 + IEEE 1588
	IF	|	Six PMUs + PRP + CyberSentry Lvl 1 + IEEE 1588 + IEC 61850
	IG	|	Six PMUs + IEC 60870-5-103
	IH	|	Six PMUs + IEC 60870-5-103 + IEC 61850
	II	|	Six PMUs + IEC 60870-5-103 + PRP + IEEE 1588
	IJ	|	Six PMUs + IEC 60870-5-103 + PRP + IEEE 1588 + IEC 61850
	IK	|	Six PMUs + IEC 60870-5-103 + PRP + IEEE 1588 + CyberSentry Lvl 1
	IL	|	Six PMUs + IEC 60870-5-103 + PRP + IEEE 1588 + CyberSentry Lvl 1 + IEC 61850
	J0	|	IEC 60870-5-103
	J3	|	IEC 60870-5-103 + IEC 61850

2

N60	- * **	- *	*	*	- F **	- H **	- M **	- P **	- U **	- W/X **			Full Size Horizontal Mount
	J6												IEC 60870-5-103 + PMU
	J7												IEC 60870-5-103 + IEC 61850 + PMU
	JE												IEC 60870-5-103 + two PMUs
	JF												IEC 60870-5-103 + IEC 61850 + two PMUs
	JG												IEC 60870-5-103 + four PMUs
	JH												IEC 60870-5-103 + IEC 61850 + four PMUs
	K0												IEEE 1588 + PRP + IEC 60870-5-103
	K3												IEEE 1588 + PRP + IEC 60870-5-103 + IEC 61850
	K6												IEEE 1588 + PRP + IEC 60870-5-103 + PMU
	K7												IEEE 1588 + PRP + IEC 60870-5-103 + IEC 61850 + PMU
	KE												IEEE 1588 + PRP + IEC 60870-5-103 + two PMUs
	KF												IEEE 1588 + PRP + IEC 60870-5-103 + IEC 61850 + two PMUs
	KG												IEEE 1588 + PRP + IEC 60870-5-103 + four PMUs
	KH												IEEE 1588 + PRP + IEC 60870-5-103 + IEC 61850 + four PMUs
	L0												IEC 60870-5-103 + IEEE 1588 + PRP + CyberSentry Lvl 1
	L3												IEC 60870-5-103 + IEEE 1588 + PRP + CyberSentry Lvl 1 + IEC 61850
	L6												IEC 60870-5-103 + IEEE 1588 + PRP + CyberSentry Lvl 1 + PMU
	L7												IEC 60870-5-103 + IEEE 1588 + PRP + CyberSentry Lvl 1 + IEC 61850 + PMU
	LE												IEC 60870-5-103 + IEEE 1588 + PRP + CyberSentry Lvl 1 + two PMUs
	LF												IEC 60870-5-103 + IEEE 1588 + PRP + CyberSentry Lvl 1 + IEC 61850 + two PMUs
	LG												IEC 60870-5-103 + IEEE 1588 + PRP + CyberSentry Lvl 1 + four PMUs
	LH												IEC 60870-5-103 + IEEE 1588 + PRP + CyberSentry Lvl 1 + IEC 61850 + four PMUs
	M0												IEC 61850 + PMU + 61850-90-5
	M2												IEC 61850 + 2 x PMU + 61850-90-5
	M3												IEC 61850 + 4 x PMU + 61850-90-5
	M7												CyberSentry UR Lvl 1 + IEC 61850 + PMU + 61850-90-5
	M9												CyberSentry UR Lvl 1 + IEC 61850 + 2 x PMU + 61850-90-5
	MA												CyberSentry UR Lvl 1 + IEC 61850 + 4 x PMU + 61850-90-5
	MD												IEEE 1588 + IEC 61850 + PMU + 61850-90-5
	MF												IEEE 1588 + IEC 61850 + 2 x PMU + 61850-90-5
	MG												IEEE 1588 + IEC 61850 + 4 x PMU + 61850-90-5
	MJ												PRP + IEC 61850 + PMU + 61850-90-5
	ML												PRP + IEC 61850 + 2 x PMU + 61850-90-5
	MM												PRP + IEC 61850 + 4 x PMU + 61850-90-5
	MP												IEEE 1588 + CyberSentry UR Lvl 1 + IEC 61850 + PMU + 61850-90-5
	MR												IEEE 1588 + CyberSentry UR Lvl 1 + IEC 61850 + 2 x PMU + 61850-90-5
	MS												IEEE 1588 + CyberSentry UR Lvl 1 + IEC 61850 + 4 x PMU + 61850-90-5
	MV												IEEE 1588 + PRP + IEC 61850 + PMU + 61850-90-5
	MX												IEEE 1588 + PRP + IEC 61850 + 2 x PMU + 61850-90-5
	MY												IEEE 1588 + PRP + IEC 61850 + 4 x PMU + 61850-90-5
	N1												PRP + CyberSentry UR Lvl 1 + IEC 61850 + PMU + 61850-90-5
	N3												PRP + CyberSentry UR Lvl 1 + IEC 61850 + 2 x PMU + 61850-90-5
	N4												PRP + CyberSentry UR Lvl 1 + IEC 61850 + 4 x PMU + 61850-90-5
	N7												IEEE 1588 + PRP + CyberSentry UR Lvl 1 + IEC 61850 + PMU + 61850-90-5
	N9												IEEE 1588 + PRP + CyberSentry UR Lvl 1 + IEC 61850 + 2 x PMU + 61850-90-5
	NA												IEEE 1588 + PRP + CyberSentry UR Lvl 1 + IEC 61850 + 4 x PMU + 61850-90-5
	ND												IEC 60870-5-103 + IEC 61850 + PMU + 61850-90-5
	NF												IEC 60870-5-103 + IEC 61850 + 2 x PMU + 61850-90-5
	NG												IEC 60870-5-103 + IEC 61850 + 4 x PMU + 61850-90-5
	NJ												IEEE 1588 + PRP + IEC 60870-5-103 + IEC 61850 + PMU + 61850-90-5
	NL												IEEE 1588 + PRP + IEC 60870-5-103 + IEC 61850 + 2 x PMU + 61850-90-5
	NM												IEEE 1588 + PRP + IEC 60870-5-103 + IEC 61850 + 4 x PMU + 61850-90-5
	NP												IEC 60870-5-103 + IEEE 1588 + PRP + CyberSentry UR Lvl 1 + IEC 61850 + PMU + 61850-90-5
	NR												IEC 60870-5-103 + IEEE 1588 + PRP + CyberSentry UR Lvl 1 + IEC 61850 + 2 x PMU + 61850-90-5
	NS												IEC 60870-5-103 + IEEE 1588 + PRP + CyberSentry UR Lvl 1 + IEC 61850 + 4 x PMU + 61850-90-5
	O4												6 x PMU + IEC 61850 + 61850-90-5
	O5												CyberSentry UR Lvl 1 + 6 x PMU + IEC 61850 + 61850-90-5
	O6												IEEE 1588 + 6 x PMU + IEC 61850 + 61850-90-5
	O7												PRP + 6 x PMU + IEC 61850 + 61850-90-5
	O8												IEEE 1588 + CyberSentry UR Lvl 1 + 6 x PMU + IEC 61850 + 61850-90-5
	O9												IEEE 1588 + PRP + 6 x PMU + IEC 61850 + 61850-90-5
	OA												PRP + CyberSentry UR Lvl 1 + 6 x PMU + IEC 61850 + 61850-90-5
	OB												IEEE 1588 + PRP + CyberSentry UR Lvl 1 + 6 x PMU + IEC 61850 + 61850-90-5
	OC												IEC 60870-5-103 + 6 x PMU + IEC 61850 + 61850-90-5
	OD												IEC 60870-5-103 + IEEE 1588 + PRP + 6 x PMU + IEC 61850 + 61850-90-5
	OE												IEC 60870-5-103 + IEEE 1588 + PRP + CyberSentry UR Lvl 1 + 6 x PMU + IEC 61850 + 61850-90-5
	SA												IEC 60870-5-103 + IEEE 1588 + PRP + IEC 61850 + CyberSentry UR Lvl 1 + MSOD
	SB												IEC 60870-5-103 + IEEE 1588 + PRP + IEC 61850 + CyberSentry UR Lvl 1 + MSOD + PMU + IEC 61850-90-5
	SC												IEC 60870-5-103 + IEEE 1588 + PRP + IEC 61850 + CyberSentry UR Lvl 1 + MSOD + 2 x PMU + IEC 61850-90-5
	SD												IEC 60870-5-103 + IEEE 1588 + PRP + IEC 61850 + CyberSentry UR Lvl 1 + MSOD + 4 x PMU + IEC 61850-90-5
	SE												IEC 60870-5-103 + IEEE 1588 + PRP + IEC 61850 + CyberSentry UR Lvl 1 + MSOD + 6 x PMU + IEC 61850-90-5
	T8												IEC 60870-5-103 + IEEE 1588 + PRP + IEC 61850 + MSOD
	T9												IEC 60870-5-103 + IEEE 1588 + PRP + IEC 61850 + MSOD + PMU + IEC 61850-90-5
	TA												IEC 60870-5-103 + IEEE 1588 + PRP + IEC 61850 + MSOD + 2 x PMU + IEC 61850-90-5
	TB												IEC 60870-5-103 + IEEE 1588 + PRP + IEC 61850 + MSOD + 4 x PMU + IEC 61850-90-5
	TC												IEC 60870-5-103 + IEEE 1588 + PRP + IEC 61850 + MSOD + 6 x PMU + IEC 61850-90-5
MOUNT/COATING		H											Horizontal (19" rack)
		A											Horizontal (19" rack) with harsh environmental coating
FRONT PANEL + INTERFACE			C										English display
			D										French display
			R										Russian display
			P										English display with 4 small and 12 large programmable pushbuttons
			G										French display with 4 small and 12 large programmable pushbuttons
			S										Russian display with 4 small and 12 large programmable pushbuttons
			K										Enhanced front panel with English display
			M										Enhanced front panel with French display
			Q										Enhanced front panel with Russian display
			U										Enhanced front panel with Chinese display
			L										Enhanced front panel with English display and user-programmable pushbuttons
			N										Enhanced front panel with French display and user-programmable pushbuttons
			T										Enhanced front panel with Russian display and user-programmable pushbuttons
			V										Enhanced front panel with Chinese display and user-programmable pushbuttons
			W										Enhanced front panel with Turkish display
			Y										Enhanced front panel with Turkish display and user-programmable pushbuttons

N60 - * ** - * * - F ** - H ** - M ** - P ** - U ** - W/X **								Full Size Horizontal Mount
	I							Enhanced front panel with German display
	J							Enhanced front panel with German display and user-programmable pushbuttons
	H							Enhanced front panel with Polish display
	O							Enhanced front panel with Polish display and user-programmable pushbuttons
	E							7" Graphical front panel display in multiple languages with USB front port and programmable pushbuttons (English, French, Chinese, Russian, Turkish, German, Polish, Japanese)
POWER SUPPLY	H							125 / 250 V AC/DC power supply
(redundant supply must	H						RH	125 / 250 V AC/DC with redundant 125 / 250 V AC/DC power supply
be same type as main supply)	L							24 to 48 V (DC only) power supply
	L						RL	24 to 48 V (DC only) with redundant 24 to 48 V DC power supply
PROCESS BUS		XX	81	XX		XX		IEC 61850 Process Bus Module for HardFiber, 8 x
(non-HardFiber requires IEC 61850,		XX	85	XX		XX		IEC 61850-9-2LE and IEC 61869 Process Bus Module, 2 x 1000Base-SX, LC
PRP, IEEE 1588 software options)		XX	86	XX		XX		IEC 61850-9-2LE and IEC 61869 Process Bus Module, 4 x 1000Base-SX + 4 x 100Base-FX, LC
		XX	87	XX		XX		IEC 61850-9-2LE and IEC 61869 Process Bus Module, 4 x 100Base-FX, LC
CONTACT INPUTS/OUTPUTS		XX		XX	XX	XX	XX	No Module
					4A	4A	4A	4 Solid-State (no monitoring) MOSFET outputs
					4B	4B	4B	4 Solid-State (voltage with optional current) MOSFET outputs
					4C	4C	4C	4 Solid-State (current with optional voltage) MOSFET outputs
					4L	4L	4L	14 Form-A (no monitoring) Latchable outputs
					67	67	67	8 Form-A (no monitoring) outputs
					6C	6C	6C	8 Form-C outputs
					6D	6D	6D	16 Contact inputs
					6E	6E	6E	4 Form-C outputs, 8 contact inputs
					6F	6F	6F	8 Fast Form-C outputs
					6P	6P	6P	6 Form-A (current with optional voltage) outputs, 4 contact inputs
					6R	6R	6R	2 Form-A (no monitoring) and 2 Form-C outputs, 8 contact inputs
					6S	6S	6S	2 Form-A (no monitoring) and 4 Form-C outputs, 4 contact inputs
					6T	6T	6T	4 Form-A (no monitoring) outputs, 8 contact inputs
					6U	6U	6U	6 Form-A (no monitoring) outputs, 4 contact inputs
					6V	6V	6V	2 Form-A outputs, 1 Form-C output, 2 Form-A (no monitoring) latching outputs, 8 contact inputs
					6W	6W	6W	30 Contact inputs - pin terminals (max 4 modules)
					6X	6X	6X	18 Form-A (no monitoring) outputs - pin terminals (max 4 modules)
INTER-RELAY COMMUNICATIONS							2H	IEEE C37.94, 820 nm, 128 kbps, multimode, LED, 2 Channels
(select a maximum of 1 per unit)							2I	Channel 1 - IEEE C37.94, MM, 64/128 kbps; Channel 2 - 1300 nm, single-mode, Laser
							2J	Channel 1 - IEEE C37.94, MM, 64/128 kbps; Channel 2 - 1550 nm, single-mode, Laser
							73	1550 nm, single-mode, Laser, 2 Channel
							76	IEEE C37.94, 820 nm, 64 kbps, multimode, LED, 1 Channel
							77	IEEE C37.94, 820 nm, 64 kbps, multimode, LED, 2 Channels
							7A	820 nm, multimode, LED, 1 Channel
							7H	820 nm, multimode, LED, 2 Channels
							7I	1300 nm, multimode, LED, 2 Channels
							7M	Channel 1 - RS422; Channel 2 - 1300 nm, multimode, LED
							7S	G.703, 2 Channels
							7V	RS422, 2 Channels, 2 Clock Inputs
							7W	RS422, 2 Channels

2.3.3 Replacement modules

Replacement modules can be ordered separately. When ordering a replacement CPU module or front panel, provide the serial number of your existing unit.

Not all replacement modules apply to the N60 relay. The modules specified in the order codes for the N60 are available as replacement modules for the N60.

The order codes shown here are subject to change without notice. See the web page for the product for the latest options.

Table 2-6: UR order codes for replacement modules, horizontal units

	UR - ** - *			
POWER SUPPLY		SH	A	125 / 250 V AC/DC module with control power external output
		SL	A	24 to 48 V DC-only module with control power external output
		TH	A	125 / 250 V AC/DC module with NO control power external output
CPU		T		RS485 with 3 100Base-FX Ethernet, multimode, SFP with LC
		U		RS485 with 1 100Base-TX Ethernet, SFP RJ-45 + 2 100Base-FX Ethernet, multimode, SFP with LC
		V		RS485 with 3 100Base-TX Ethernet, SFP with RJ-45
		W		RS485 with 2 100Base-FX Ethernet, multimode ST + 10/100Base-TX Ethernet, RJ-45
FRONT PANEL + INTERFACE		3C		Horizontal front panel with keypad and English display
		3D		Horizontal front panel with keypad and French display
		3R		Horizontal front panel with keypad and Russian display
		3A		Horizontal front panel with keypad and Chinese display
		3P		Horizontal front panel with keypad, user-programmable pushbuttons, and English display
		3G		Horizontal front panel with keypad, user-programmable pushbuttons, and French display
		3S		Horizontal front panel with keypad, user-programmable pushbuttons, and Russian display
		3B		Horizontal front panel with keypad, user-programmable pushbuttons, and Chinese display
		3K		Enhanced front panel with English display
		3M		Enhanced front panel with French display
		3Q		Enhanced front panel with Russian display
		3U		Enhanced front panel with Chinese display
		3L		Enhanced front panel with English display and user-programmable pushbuttons
		3N		Enhanced front panel with French display and user-programmable pushbuttons
		3T		Enhanced front panel with Russian display and user-programmable pushbuttons
		3V		Enhanced front panel with Chinese display and user-programmable pushbuttons
		3I		Enhanced front panel with German display
		3J		Enhanced front panel with German display and user-programmable pushbuttons
		3H		Enhanced front panel with Polish display
		3O		Enhanced front panel with Polish display and user-programmable pushbuttons
		3Z		Enhanced front panel with Japanese display
		3X		Enhanced front panel with Japanese display and user-programmable pushbuttons
		3E		7" Graphical front panel display in multiple languages with USB front port and user-programmable pushbuttons
CONTACT INPUTS AND OUTPUTS		4A		4 Solid-State (no monitoring) MOSFET outputs
		4B		4 Solid-State (voltage with optional current) MOSFET outputs
		4C		4 Solid-State (current with optional voltage) MOSFET outputs
		4D		16 Contact inputs with Auto-Burnishing

2

	UR - ** - *	
	4L	14 Form-A (no monitoring) Latching outputs
	67	8 Form-A (no monitoring) outputs
	6A	2 Form-A (voltage with optional current) and 2 Form-C outputs, 8 contact inputs
	6B	2 Form-A (voltage with optional current) and 4 Form-C outputs, 4 contact inputs
	6C	8 Form-C outputs
	6D	16 Contact inputs
	6E	4 Form-C outputs, 8 contact inputs
	6F	8 Fast Form-C outputs
	6G	4 Form-A (voltage with optional current) outputs, 8 contact inputs
	6H	6 Form-A (voltage with optional current) outputs, 4 contact inputs
	6K	4 Form-C and 4 Fast Form-C outputs
	6L	2 Form-A (current with optional voltage) and 2 Form-C outputs, 8 contact inputs
	6M	2 Form-A (current with optional voltage) and 4 Form-C outputs, 4 contact inputs
	6N	4 Form-A (current with optional voltage) outputs, 8 contact inputs
	6P	6 Form-A (current with optional voltage) outputs, 4 contact inputs
	6R	2 Form-A (no monitoring) and 2 Form-C outputs, 8 contact inputs
	6S	2 Form-A (no monitoring) and 4 Form-C outputs, 4 contact inputs
	6T	4 Form-A (no monitoring) outputs, 8 contact inputs
	6U	6 Form-A (no monitoring) outputs, 4 contact inputs
	6V	2 Form-A outputs, 1 Form-C output, 2 Form-A (no monitoring) latching outputs, 8 contact inputs
	6W	30 Contact inputs - pin terminals (max 4 modules)
	6X	18 Form-A (no monitoring) outputs - pin terminals (max 4 modules)
CT/VT MODULES (not available for the C30)	8L	Standard 4CT/4VT with enhanced diagnostics
	8N	Standard 8CT with enhanced diagnostics
	8M	Sensitive Ground 4CT/4VT with enhanced diagnostics
	8R	Sensitive Ground 8CT with enhanced diagnostics
	8V	Standard 8VT with enhanced diagnostics (only one module supported)
PROCESS BUS MODULES	81	IEC 61850 Process Bus Module for HardFiber, 8 x
	85	IEC 61850-9-2LE and IEC 61869 Process Bus Module, 2 x 1000Base-SX, LC
	86	IEC 61850-9-2LE and IEC 61869 Process Bus Module, 4 x 1000Base-SX + 4 x 100Base-FX, LC
	87	IEC 61850-9-2LE and IEC 61869 Process Bus Module, 4 x 100Base-FX, LC
INTER-RELAY COMMUNICATIONS	2A	C37.94SM, 1300 nm single-mode, ELED, 1 channel single-mode
	2B	C37.94SM, 1300 nm single-mode, ELED, 2 channel single-mode
	2H	IEEE C37.94, 820 nm, 128 kbps, multimode, LED, 2 Channels
	2I	Channel 1 - IEEE C37.94, multimode, 64/128 kbps; Channel 2 - 1300 nm, single-mode, Laser
	2J	Channel 1 - IEEE C37.94, multimode, 64/128 kbps; Channel 2 - 1550 nm, single-mode, Laser
	72	1550 nm, single-mode, Laser, 1 Channel
	73	1550 nm, single-mode, Laser, 2 Channel
	76	IEEE C37.94, 820 nm, multimode, LED, 1 Channel
	77	IEEE C37.94, 820 nm, multimode, LED, 2 Channels
	7A	820 nm, multimode, LED, 1 Channel
	7B	1300 nm, multimode, LED, 1 Channel
	7C	1300 nm, single-mode, ELED, 1 Channel
	7D	1300 nm, single-mode, Laser, 1 Channel
	7F	Channel 1 - G.703; Channel 2 - 1300 nm, multimode
	7G	Channel 1 - G.703; Channel 2 - 1300 nm, single-mode ELED
	7H	820 nm, multimode, LED, 2 Channels
	7I	1300 nm, multimode, LED, 2 Channels
	7J	1300 nm, single-mode, ELED, 2 Channels
	7K	1300 nm, single-mode, Laser, 2 Channels
	7M	Channel 1 - RS422; Channel 2 - 1300 nm, multimode, LED
	7N	Channel 1 - RS422; Channel 2 - 1300 nm, single-mode, ELED
	7P	Channel 1 - RS422; Channel 2 - 1300 nm, single-mode, Laser
	7Q	Channel 1 - G.703; Channel 2 - 1300 nm, single-mode Laser
	7R	G.703, 1 Channel
	7S	G.703, 2 Channels
	7T	RS422, 1 Channel
	7W	RS422, 2 Channels
TRANSDUCER INPUTS/OUTPUTS	5A	4 DCmA inputs, 4 DCmA outputs (only one 5A or 5D module is allowed)
	5C	8 RTD inputs
	5D	4 RTD inputs, 4 DCmA outputs (only one 5A or 5D module is allowed)
	5E	4 DCmA inputs, 4 RTD inputs
	5F	8 DCmA inputs

2.4 Signal processing

2.4.1 UR signal processing

The URs are microprocessor-based protective relays that are designed to measure power system conditions directly via CT and VT inputs and via other sources of information, such as analog inputs, communications inputs, and contact inputs. The following figure shows the overall signal processing in URs.

An analog low pass anti-aliasing filter with a 3 dB corner frequency is set at 2.4 kHz and is used for current and voltage analog filtering as well as signal conditioning. The same filtering is applied for phase, ground currents, phase-to-phase (when applicable), and auxiliary voltages. The 2.4 kHz cut-off frequency applies to both 50 and 60 Hz applications and fixed in the hardware, and thus is not dependent on the system nominal frequency setting.

Figure 2-4: UR signal processing

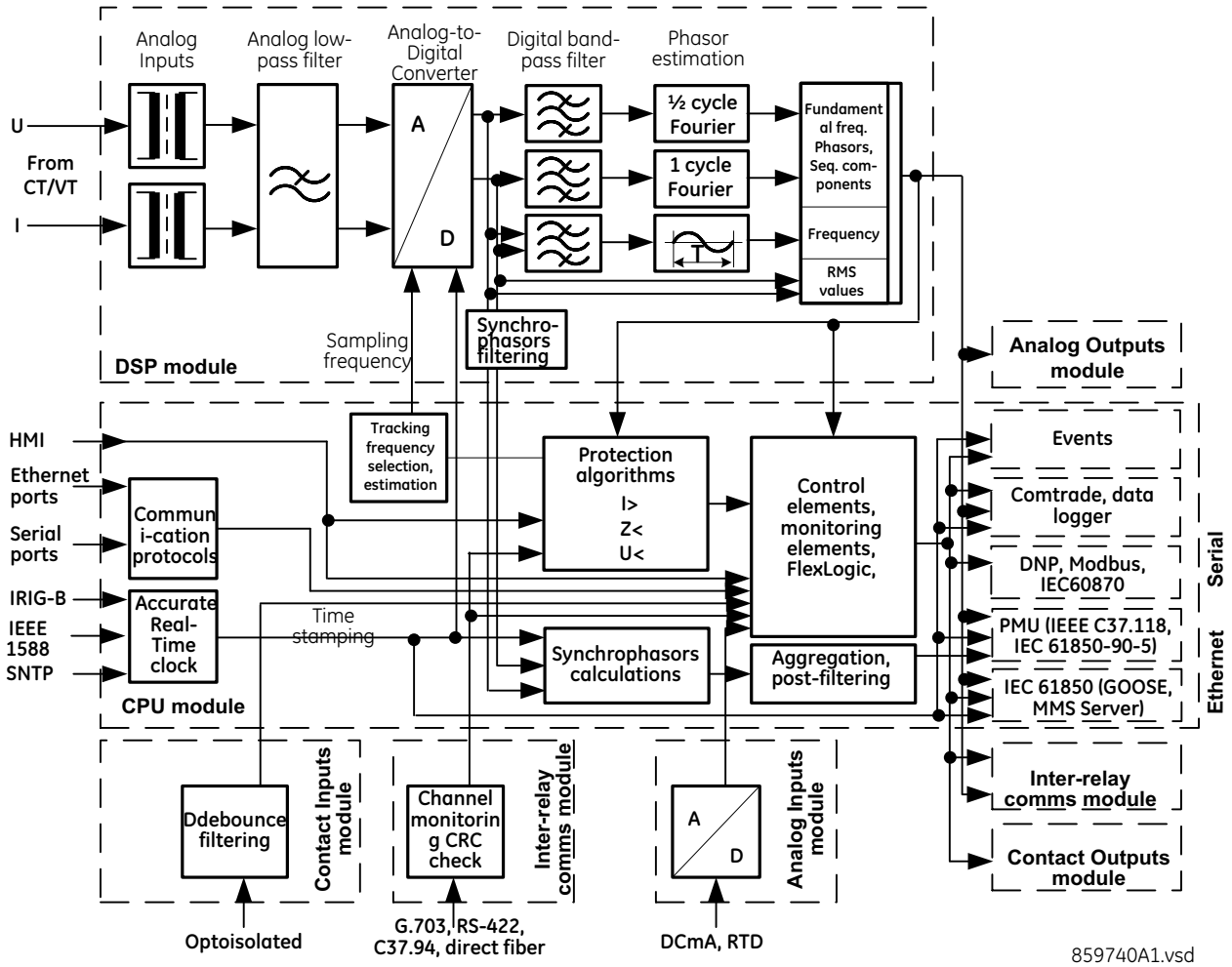

The UR samples its AC signals at 64 samples per cycle, that is, at 3840 Hz in 60 Hz systems, and 3200 Hz in 50 Hz systems. The sampling rate is adjusted dynamically to the actual system frequency by an accurate and fast frequency tracking system.

The analog/digital converter has the following ranges of AC signals:

Voltages:

$$\pm\sqrt{2}\cdot 260(\mathrm{V}) \qquad \textbf{Eq. 2-1}$$

Currents:

$$\pm\sqrt{2}\cdot 46\mathrm{rated}(\mathrm{A}) \qquad \textbf{Eq. 2-2}$$

Current harmonics are estimated based on raw samples with the use of the full-cycle Fourier filter. Harmonics 2nd through 25th are estimated.

True RMS value for the current is calculated on a per-phase basis. The true RMS can be used for demand recording or as an input signal to Time Overcurrent function, if the latter is intended for thermal protection. The true RMS is calculated as per the widely accepted definition:

$$I_{RMS(t)} = \sqrt{\frac{1}{T}\int_{(t-T)}^{t} i^2(t)dt}$$

Eq. 2-3

RMS values include harmonics, inter-harmonics, DC components, and so on, along with fundamental frequency values. The true RMS value reflects thermal effects of the current and is used for the thermal related monitoring and protection functions.

Protection and control functions respond to phasors of the fundamental and/or harmonic frequency components (magnitudes and angles), with an exception for some functions that have an option for RMS or fundamental measurements, or some function responding to RMS only. This type of response is explained typically in each element's section in this instruction manual.

Currents are pre-filtered using a Finite Impulse Response (FIR) digital filter. The filter is designed to reject DC components and low-frequency distortions, without amplifying high-frequency noise. This filter is referred to as a modified MIMIC filter, which provides excellent filtering and overall balance between speed and accuracy of filtering. The filter is cascaded with the full-cycle Fourier filter for the current phasor estimation.

Voltages are pre-filtered using a patented FIR digital filter. The filter has been optimized to reject voltage-transformer-specific distortions, such as Capacitive Voltage Transformer (CVT) noise and high-frequency oscillatory components. The filter is cascaded with the half-cycle Fourier filter for the voltage phasor estimation.

The URs measure power system frequency using the Clarke transformation by estimating the period of the waveform from two consecutive zero-crossings in the same direction (negative-to-positive). Voltage or current samples are pre-filtered using a Finite Impulse Response (FIR) digital filter to remove high frequency noise contained in the signal. The period is used after several security conditions are met, such as true RMS signal must be above 6% nominal for a certain time. If these security conditions are not met, the last valid measurement is used for a specific time after which the UR reverts to nominal system frequency.

Synchrophasors are calculated using a patented convolution integral algorithm. This algorithm allows use of the same time-stamped samples, which are used for protection and taken at the same sampling frequency. This allows URs to use one sampling clock for both protection algorithms and synchrophasors.

Synchrophasors on firmware versions 7.23 and up have been tested and certified to meet IEEE C37.118-2011 and C37.118.1a-2014 standards for both metering and protection classes with outputs available up to 60 synchrophasors per second for the metering class and 120 synchrophasors per second for the protection class. Synchrophasors measurement is also available via IEC 61850-90-5 protocol.

The contact inputs threshold is settable in the firmware with 17, 33, 84, and 166 V DC settings available. Inputs are scanned every 0.5 ms and can be conditioned for the critical applications, using debounce time timer, settable from 0.0 to 16.0 ms. Contact inputs with auto-burnishing are available as well, when external contacts are exposed to the contamination in a harsh industrial environment.

All measured values are available in the UR metering section on the front panel and via communications protocols. Measured analog values and binary signals can be captured in COMTRADE format with sampling rates from 8 to 64 samples per power cycle. Analog values can be captured with the Data Logger, allowing much slower rates extended over a long period of time.

Other advanced UR order code options are available to support IEC 61850 (including fast GOOSE, ICD/CID/IID files, and so on), IEEE 1588 (IEEE C37.238 power profile) based time synchronization, CyberSentry (advanced cyber security), the Parallel Redundancy Protocol (PRP), IEC 60870-5-103, and so on.

2.5 Specifications

Specifications are subject to change without notice.

2.5.1 Protection elements

The operating times include the activation time of a trip rated form-A output contact unless otherwise indicated. FlexLogic operands of a given element are 4 ms faster. Take this into account when using FlexLogic to interconnect with other protection or control elements of the relay, building FlexLogic equations, or interfacing with other intelligent electronic devices (IEDs) or power system devices via communications or different output contacts. If not specified, the operate times given here are for a 60 Hz system at nominal system frequency. Operate times for a 50 Hz system are 1.2 times longer. Timer Accuracy is specified as a percentage of the total operating time that is the sum of the Operate Time and settable Pickup Delay.

NOTE 1 — Protection and control elements with NOTE 1 have additional operating time delay of up to 3 ms if the N60 is ordered with an IEC 61850-9-2LE / IEC 61869 Process Bus Module (order code 85, 86, 87).

PHASE/NEUTRAL/GROUND TOC

Current:	Phasor or RMS
Pickup level:	0.020 to 30.000 pu in steps of 0.001 (standard CT for ground) 0.002 to 3.000 pu in steps of 0.001 (sensitive ground CT) 0.005 to 30.000 pu in steps of 0.001 (Process Bus Module, ground)
Dropout level:	97% of pickup
Level accuracy:	
0.1 to 2.0 × CT:	±0.5% of reading or ±0.4% of rated (whichever is greater)
> 2.0 × CT:	±1.5% of reading > 2.0 × CT rating
Timing characteristics:	IEEE Moderately/Very/Extremely Inverse; IEC (and BS) A/B/C and Short Inverse; GE IAC Inverse, Short/Very/ Extremely Inverse; I^2t; FlexCurves™ (programmable); (Curve multiplier 0.00 to 600.00 in steps of 0.01 s) Definite Time (Time delay = 0.00 to 600.00 in steps of 0.01 s)
Reset type:	Instantaneous/Timed (per IEEE)
Curve timing accuracy at 1.03 to 20 x pickup:	
	±3.5% of operate time or ±½ cycle (whichever is greater) from pickup to operate (see NOTE 1)
Voltage restraint:	Modifies pickup current for voltage in the range of 0.1 < V < 0.9 VT Nominal in a fixed linear relationship

PHASE/NEUTRAL/GROUND IOC

Pickup level:	0.020 to 30.000 pu in steps of 0.001 (standard CT for ground) 0.002 to 3.000 pu in steps of 0.001 (sensitive ground CT) 0.005 to 30.000 pu in steps of 0.001 (Process Bus Module, ground)
Dropout level:	97% of pickup
Level accuracy:	
0.1 to 2.0 × CT rating:	±0.5% of reading or ±0.4% of rated (whichever is greater)
> 2.0 × CT rating:	±1.5% of reading
Overreach:	<2%
Pickup delay:	0.00 to 600.00 s in steps of 0.01
Reset delay:	0.00 to 600.00 s in steps of 0.01
Operate time:	<16 ms at 3 × pickup at 60 Hz (Phase IOC) (see NOTE 1) <20 ms at 3 × pickup at 60 Hz (Neutral IOC) (see NOTE 1) <25 ms at 3 x pickup at 60 Hz (Ground IOC) (see NOTE 1)
Timer accuracy:	±3.5% of operate time or ±1/4 cycle (whichever is greater)

PHASE DIRECTIONAL OVERCURRENT

Relay connection:	90° (quadrature)
Quadrature voltage:	ABC phase seq.: phase A (V_{BC}), phase B (V_{CA}), phase C (V_{AB}); ACB phase seq.: phase A (V_{CB}), phase B (V_{AC}), phase C (V_{BA})
Polarizing voltage threshold:	0.004 to 3.000 pu in steps of 0.001
Current sensitivity threshold:	0.05 pu
Characteristic angle:	0 to 359° in steps of 1
Angle accuracy:	±2°

2

Operation time (FlexLogic operands):
Tripping (reverse load, forward fault): <12 ms, typically (see NOTE 1)
Blocking (forward load, reverse fault): <8 ms, typically (see NOTE 1)

NEUTRAL DIRECTIONAL OVERCURRENT

Directionality:	Co-existing forward and reverse
Polarizing:	Voltage, Current, Dual, Dual-V, Dual-I
Polarizing voltage:	V_0 or VX
Polarizing current:	IG
Operating current:	I_0
Level sensing:	3 × (|I_0| – K × |I_1|), IG Independent for forward and reverse
Restraint, K:	0.000 to 0.500 in steps of 0.001
Characteristic angle:	–90 to 90° in steps of 1
Limit angle:	40 to 90° in steps of 1, independent for forward and reverse
Angle accuracy:	±2°
Offset impedance:	0.00 to 250.00 Ω in steps of 0.01
Pickup level:	0.002 to 30.000 pu in steps of 0.01
Dropout level:	97 to 98%
Operation time:	<16 ms at 3 × pickup at 60 Hz (see NOTE 1)

SENSITIVE DIRECTIONAL POWER

Measured power:	3-phase, true RMS
Number of stages:	2
Characteristic angle:	0 to 359° in steps of 1
Calibration angle:	0.00 to 0.95° in steps of 0.05
Minimum power:	–3.300 to 3.300 pu in steps of 0.001
Pickup level accuracy:	±1% or ±0.001 pu, whichever is greater
Hysteresis:	2% or 0.001 pu, whichever is greater
Pickup delay:	0 to 600.00 s in steps of 0.01
Timer accuracy:	±3% of operate time or ±1/4 cycle (whichever is greater)
Operate time:	<50 ms (plus up to 5 ms with Process Bus Module with order code 85, 86, 87)

PHASE UNDERVOLTAGE

Pickup level:	0.004 to 3.000 pu in steps of 0.001
Dropout level:	102% of pickup
Level accuracy:	±0.5% of reading from 10 to 208 V
Timing characteristics:	GE IAV Inverse (Curve multiplier 0.00 to 600.00 in steps of 0.01 s) Definite Time (Time delay = 0.00 to 600.00 in steps of 0.01 s) FlexCurves (programmable, Curve multiplier = 0.00 to 600.00 in steps of 0.01 s)
Reset delay:	0 to 600.00 s in steps of 0.01 s
Curve timing accuracy at <0.90 × pickup:	±3.5% of operate time or ±1/2 cycle (whichever is greater) from pickup to operate
Operate time:	<30 ms at 0.9 pickup at 60 Hz for Definite Time mode

PHASE OVERVOLTAGE

Voltage:	Phasor only
Pickup level:	0.004 to 3.000 pu in steps of 0.001
Dropout level:	98% of pickup
Level accuracy:	±0.5% of reading from 10 to 208 V
Timing characteristics:	GE IAV Inverse (Curve multiplier 0.00 to 600.00 in steps of 0.01 s); Definite Time (Time delay = 0.00 to 600.00 in steps of 0.01 s); FlexCurves (programmable, Curve multiplier = 0.00 to 600.00 in steps of 0.01 s)
Reset delay:	0 to 600.00 s in steps of 0.01 s
Curve timing accuracy at >1.10 × pickup:	±3.5% of operate time or ±1 cycle (whichever is greater) from pickup to operate
Operate time:	<30 ms at 1.10 × pickup at 60 Hz for Definite Time mode

UNDERFREQUENCY

Minimum signal:	0.10 to 1.25 pu in steps of 0.01
Pickup level:	20.00 to 65.00 Hz in steps of 0.01
Dropout level:	pickup + 0.03 Hz
Level accuracy:	±0.001 Hz
Time delay:	0 to 65.535 s in steps of 0.001
Timer accuracy:	±3% of operate time or ±1/4 cycle (whichever is greater)
Operate time:	typically 4 cycles at 0.1 Hz/s change typically 3.5 cycles at 0.3 Hz/s change typically 3 cycles at 0.5 Hz/s change

Typical times are average operate times including variables, such as frequency change instance, and test method, and can vary by ±0.5 cycles.

OVERFREQUENCY

Pickup level:	20.00 to 65.00 Hz in steps of 0.01
Dropout level:	pickup – 0.03 Hz
Level accuracy:	±0.001 Hz
Time delay:	0 to 65.535 s in steps of 0.001
Timer accuracy:	±3% of operate time or ±1/4 cycle (whichever is greater)
Operate time:	typically 4 cycles at 0.1 Hz/s change typically 3.5 cycles at 0.3 Hz/s change typically 3 cycles at 0.5 Hz/s change

Typical times are average operate times including variables such as frequency change instance, test method, and so on, and can vary by ±0.5 cycles.

RATE OF CHANGE OF FREQUENCY

df/dt trend:	increasing, decreasing, bi-directional
df/dt pickup level:	0.10 to 15.00 Hz/s in steps of 0.01
df/dt dropout level:	96% of pickup
df/dt level accuracy:	80 mHz/s or 3.5%, whichever is greater (up to df/dt trend of 10 Hz/s)
Overvoltage supv.:	0.100 to 3.000 pu in steps of 0.001
Overcurrent supv.:	0.020 to 30.000 pu in steps of 0.001
Pickup delay:	0 to 65.535 s in steps of 0.001
Reset delay:	0 to 65.535 s in steps of 0.001
Timer accuracy:	±3% of operate time or ±1/4 cycle (whichever is greater)
Operate time:	typically 9.5 cycles at 2 × pickup typically 8.5 cycles at 3 × pickup typically 6.5 cycles at 5 × pickup

Typical times are average operate times including variables such as frequency change instance, test method, and so on, and can vary by ±0.5 cycles.

SYNCHROCHECK

Max voltage difference:	0 to 400000 V in steps of 1
Max angle difference:	0 to 100° in steps of 1
Max freq. difference:	0.005 to 2.000 Hz in steps of 0.001
Hysteresis for max. freq. diff.:	0.000 to 0.100 Hz in steps of 0.001
Dead source function:	None, LV1 & DV2, DV1 & LV2, DV1 or DV2, DV1 xor DV2, DV1 & DV2 (L = Live, D = Dead)
S-CLS MAX dF:	0.100 to 10.000 Hz in steps of 0.001
S-CLS MIN dF:	0.005 to 1.000 Hz in steps of 0.001
V2 MAG CORR FACTOR:	0.10 to 10.00 in steps of 0.01
V2 ANGLE SHIFT:	-180° to +180° in steps of 1°
PHASE SELECT:	Auto, Vag, Vbg, Vcg, Vab, Vbc, Vca

POWER SWING DETECT

Functions:	Power swing block, out-of-step trip
Characteristic:	Mho or Quad
Measured impedance:	Positive-sequence
Blocking / tripping modes:	2-step or 3-step

2

Tripping mode:	Early or Delayed
Current supervision:	
Pickup level:	0.050 to 30.000 pu in steps of 0.001
Dropout level:	97 to 98% of pickup
Fwd / reverse reach (sec. Ω):	0.10 to 500.00 Ω in steps of 0.01
Left and right blinders (sec. Ω):	0.10 to 500.00 Ω in steps of 0.01
Impedance accuracy:	±5%
Fwd / reverse angle impedances:	40 to 90° in steps of 1
Angle accuracy:	±2°
Characteristic limit angles:	40 to 140° in steps of 1
Timers:	0.000 to 65.535 s in steps of 0.001
Timer accuracy:	±3% of operate time or ±1/4 cycle (whichever is greater)

OPEN POLE DETECTOR

Functionality:	Detects an open pole condition, monitoring breaker auxiliary contacts, the current in each phase, and optional voltages on the line
Current pickup level:	0.020 to 30.000 pu in steps of 0.001
Line capacitive reactances (X_{C1}, X_{C0}):	300.0 to 9999.9 sec. Ω in steps of 0.1
Remote current pickup level:	0.000 to 30.000 pu in steps of 0.001
Current dropout level:	pickup + 3%, not less than 0.05 pu

THERMAL OVERLOAD PROTECTION

Thermal overload curves:	IEC 255-8 curve
Base current:	0.20 to 3.00 pu in steps of 0.01
Overload (k) factor:	0.2 to 4 pu in steps of 0.05
Alarm level:	0.2 to 1.0 pu in steps of 0.1
Trip time constant:	0 to 999 min. in steps of 0.1
Reset time constant:	0 to 999 min. in steps of 0.1
Minimum reset time:	0 to 999 min. in steps of 0.1
Timer accuracy (cold curve):	±100 ms or 2%, whichever is greater
Timer accuracy (hot curve):	±500 ms or 2%, whichever is greater for $I_p < 0.9 \times k \times I_b$ and $I / (k \times I_b) > 1.1$

TRIP BUS (TRIP WITHOUT FLEXLOGIC)

Number of elements:	6
Number of inputs:	16
Operate time:	<2 ms at 60 Hz
Timer accuracy:	±3% or 10 ms, whichever is greater

HARMONIC DETECTION

Number of elements:	6
Pickup threshold:	2.0 to 100.0% of I(f1) (current fundamental frequency phasor) in steps of 0.1%
Pickup level accuracy:	
Harmonics:	With I(f1) from 0.4 to 2.0 × CT rating: ±2% of reading or ±1% of 100%, whichever is greater
THD:	With I(f1) from 0.4 to 2.0 × CT rating: ±2% of reading or ±1% of 100% per each harmonic, whichever is greater
Pickup delay:	0 to 600.00s in steps of 0.01
Timer accuracy:	±3% of delay setting or ±1/4 cycle (whichever is greater) from pickup to operate
Operating time:	<10 ms at 2 × pickup at 60 Hz

Note: Accuracy of the DC measurement depends on the duration and content of the DC component, compared to the fundamental frequency current. It also depends on the source of the signal. DSP or HardFiber transducers can saturate and cause higher error than stated here, while with an MU-320 merging unit as a source, it meets the accuracy stated here due to immunity of the MU-320 to saturation.

MULTI-RANGE SIGNAL OSCILLATION DETECTOR (MSOD)

Number of elements:	Up to 6. Always 6 with Process Bus Module or HardFiber module.
Input signals to detector:	

For frequency band I to III:	Source Voltage Va Mag, Vb Mag, Vc Mag, V1 Mag, Source Current Ia, Mag, Ib Mag, Ic Mag, I1 Mag, Source Real 3-phase Power and Source Reactive 3-phase Power
For frequency band IV:	Source Voltages (samples) Va, Vb, Vc, Vx, V_clarke, or Source Currents: Ia, Ib, Ic, In, I_clarke
Minimum pickup of Mag_osc:	0.02 to 10.00 pu for alarm and 0.05 to 10.00 pu for trip in steps of 0.01 pu
Pickup level accuracy:	±5% of reading or 5% of rated (whichever is greater) for oscillation signal >0.1 pu
Pickup delay:	Definite time: 0 to 600.00 s in steps of 0.01 s
Time accuracy:	±3% or ±20 ms, whichever is greater
Operate time:	Typical operating time of 2/f_osc + 0.04 s without damping ratio supervision Typical operating time of 3/f_osc + max(0.02, 0.25/f_osc) s with damping ratio supervision The operating time is dependent on the oscillation inception point, the oscillation frequency and the magnitude of the oscillation, and therefore can vary from these values

2

2.5.2 User-programmable elements

FLEXLOGIC

Programming language:	Reverse Polish Notation with graphical visualization (keypad programmable)
Lines of code:	1024
Internal variables:	64
Supported operations:	NOT, XOR, OR (2 to 16 inputs), AND (2 to 16 inputs), NOR (2 to 16 inputs), NAND (2 to 16 inputs), latch (reset-dominant), edge detectors, timers
Inputs:	any logical variable, contact, or virtual input
Number of timers:	64
Pickup delay:	0 to 60000 (ms, sec., min.) in steps of 1
Dropout delay:	0 to 60000 (ms, sec., min.) in steps of 1
Timer accuracy:	±0.1% of operate time or ±1/8 cycle, whichever is greater

FLEXCURVES™

Number:	4 (A through D)
Reset points:	40 (0 through 1 of pickup)
Operate points:	80 (1 through 20 of pickup)
Time delay:	0 to 65535 ms in steps of 1

FLEX STATES

Number:	up to 256 logical variables grouped under 16 Modbus addresses
Programmability:	any logical variable, contact, or virtual input

FLEXELEMENTS™

Number of elements:	16
Operating signal:	any analog actual value, or two values in differential mode
Operating signal mode:	signed or absolute value
Operating mode:	level, delta
Comparator direction:	over, under
Pickup level:	–90.000 to 90.000 pu in steps of 0.001
Hysteresis:	0.1 to 50.0% in steps of 0.1
Delta dt:	20 ms to 60 days
Pickup and dropout delay:	0.000 to 65.535 s in steps of 0.001

NON-VOLATILE LATCHES

Type:	set-dominant or reset-dominant
Number:	16 (individually programmed)
Output:	stored in non-volatile memory
Execution sequence:	as input prior to protection, control, and FlexLogic

USER-PROGRAMMABLE LEDs (Enhanced and basic front panels)

Number:	48 plus trip and alarm
Programmability:	from any logical variable, contact, or virtual input
Reset mode:	self-reset or latched

2

LED TEST

Initiation:	from any contact input or user-programmable condition
Number of tests:	3, interruptible at any time
Duration of full test:	approximately 3 minutes
Test sequence 1:	all LEDs on
Test sequence 2:	all LEDs off, one LED at a time on for 1 s
Test sequence 3:	all LEDs on, one LED at a time off for 1 s

USER-DEFINABLE DISPLAYS (Enhanced and basic front panels)

Number of displays:	16
Lines of display:	2 × 20 alphanumeric characters
Parameters:	up to 5, any Modbus register addresses
Invoking and scrolling:	keypad, or any user-programmable condition, including pushbuttons

CONTROL PUSHBUTTONS (Enhanced and basic front panels)

Number of pushbuttons:	7
Operation:	drive FlexLogic operands

USER-PROGRAMMABLE PUSHBUTTONS

Number of pushbuttons:	12 on basic front panel 16 on enhanced horizontal front panel 6 on enhanced vertical front panel 48 on graphical front panel (8 physical pushbuttons, 40 graphical interface pushbuttons)
Mode:	self-reset, latched
Display message:	2 lines of 20 characters each
Drop-out timer:	0.00 to 60.00 s in steps of 0.05
Autoreset timer:	0.2 to 600.0 s in steps of 0.1
Hold timer:	0.0 to 10.0 s in steps of 0.1

SELECTOR SWITCH

Number of elements:	2
Upper position limit:	1 to 7 in steps of 1
Selecting mode:	time-out or acknowledge
Time-out timer:	3.0 to 60.0 s in steps of 0.1
Control inputs:	step-up and 3-bit
Power-up mode:	restore from non-volatile memory or synchronize to a 3-bit control input or synch/restore mode

DIGITIZER

Input signal:	any FlexAnalog parameter
Independent elements:	1 per CT bank, to a maximum of 5
Independent elements:	5
Response time:	< 8 ms at 60 Hz, < 10 ms at 50 Hz
Upper / lower limit for input signal:	0.050 to 90 pu in steps of 0.001
Resolution:	8 bits / full-scale
Maximum error:	±0.6% of full-scale
Rounding method:	nearest with a one-count dead-band

8-BIT COMPARATOR

Number of elements:	6
Operating signal:	up to two 8-bit integers via FlexLogic operands
Operating mode:	add or subtract, controlled from any FlexLogic operand
Operating signal mode:	signed, absolute value
Comparator direction:	over, under
Pickup level:	–25400 to 25400 in steps of 1
Hysteresis:	0 to 5000 in steps of 1
Pickup/Dropout delay:	0 to 65.535 s in steps of 0.01
Scaling factor for display:	0.01 to 100.00 in steps of 0.01

8-BIT SWITCH

Number of elements:	6
Input signals:	two 8-bit integers via FlexLogic operands
Control signal:	any FlexLogic operand
Response time:	< 8 ms at 60 Hz, < 10 ms at 50 Hz

DIGITAL ELEMENTS

Number of elements:	96
Operating signal:	any FlexLogic operand
Pickup delay:	0.000 to 999999.999 s in steps of 0.001
Dropout delay:	0.000 to 999999.999 s in steps of 0.001
Timing accuracy:	±3% or ±4 ms, whichever is greater

2.5.3 Monitoring

OSCILLOGRAPHY

Number of records:	3 to 64, configurable
Sampling rate:	8, 16, 32, or 64 samples per power cycle, configurable
Triggers:	any FlexLogic operand, configurable
Trigger position:	0 to 100%, configurable
Recorded data:	raw AC input channels up to 127 configured digital channels (+ 1 trigger operand), representing any FlexLogic operand up to 32 configured analog channels, representing any measured analog value
Data storage:	in non-volatile memory
Format:	COMTRADE IEEE C37.111 (1999 or 2013)

EVENT RECORDER

Capacity:	1024 events
Time-tag:	to 1 microsecond
Triggers:	any FlexLogic operand, configurable
Data storage:	in non-volatile memory

USER-PROGRAMMABLE FAULT REPORT

Number of elements:	2
Pre-fault trigger:	any FlexLogic operand
Fault trigger:	any FlexLogic operand
Recorder quantities:	32 (any FlexAnalog™ value)

DATA LOGGER

Number of channels:	1 to 16
Parameters:	any available analog actual value
Sampling rate:	15 to 3600000 ms in steps of 1
Trigger:	any FlexLogic operand
Mode:	continuous or triggered
Storage capacity:	(NN is dependent on memory) 1-second rate: 01 channel for NN days 16 channels for NN days ↓ 60-minute rate: 01 channel for NN days 16 channels for NN days

PHASOR MEASUREMENT UNIT

Output format:	per IEEE C37.118-2011, C37.118.1a-2014, or IEC 61850-90-5 standard
Number of channels:	14 synchrophasors, 16 analogs, 16 digitals
TVE (total vector error):	<1%

Triggering:	frequency, voltage, current, power, rate of change of frequency, user-defined
Reporting rate:	1, 2, 5, 10, 12, 15, 20, 25, 30, 50, or 60 times per second for P and M class, and 100 or 120 times per second for P class only
Number of clients:	one over TCP/IP port and one over UDP/IP per aggregator
AC ranges:	as indicated in appropriate specification sections
Network reporting format:	16-bit integer (for IEEE C37.118) or 32-bit IEEE floating point numbers
Network reporting style:	rectangular (real and imaginary for IEEE C37.188) or polar (magnitude and angle) coordinates
Post-filtering:	none, 3-point, 5-point, 7-point
Calibration:	±5° (angle) and ±5% (magnitude)

2.5.4 Metering

RMS CURRENT: PHASE, NEUTRAL, AND GROUND

Accuracy at	
0.1 to 2.0 × CT rating:	±0.25% of reading or ±0.1% of rated (whichever is greater)
> 2.0 × CT rating:	±1.0% of reading

RMS VOLTAGE

Accuracy:	±0.5% of reading from 10 to 208 V

REAL POWER (WATTS)

Accuracy at 0.1 to 1.5 × CT rating and 0.8 to 1.2 × VT rating:

±1.0% of reading at $-1.0 \le PF < -0.8$ and $0.8 < PF \le 1.0$

REACTIVE POWER (VARS)

Accuracy at 0.1 to 1.5 × CT rating and 0.8 to 1.2 × VT rating:

±1.0% of reading at $-0.2 \le PF \le 0.2$

APPARENT POWER (VA)

Accuracy at 0.1 to 1.5 × CT rating and 0.8 to 1.2 × VT rating:

±1.0% of reading

WATT-HOURS (POSITIVE AND NEGATIVE)

Accuracy:	±2.0% of reading
Range:	±0 to 1×10^6 MWh
Parameters:	three-phase only
Update rate:	50 ms

VAR-HOURS (POSITIVE AND NEGATIVE)

Accuracy:	±2.0% of reading
Range:	±0 to 1×10^6 Mvarh
Parameters:	three-phase only
Update rate:	50 ms

CURRENT HARMONICS

Harmonics:	2nd to 25th harmonic: per phase, displayed as a % of $I(f_1)$ (current fundamental frequency phasor) THD: per phase, displayed as a % of $I(f_1)$
Accuracy:	
Harmonics:	with $I(f_1)$ 0.4 to 2.0 × CT rating: ±2% of reading or ±1% of 100%, whichever is greater
THD:	with $I(f_1)$ from 0.4 to 2.0 × CT rating: ±2% of reading or ±1% of 100% per each harmonic, whichever is greater
Accuracy applies to:	2nd to 17th harmonic including THD with a regular CT/VT module 2nd to 13th harmonic including THD with a Process Bus Module (order code 85, 86, 87) when anti-aliasing filter is enabled 2nd to 16th harmonic including THD with a Process Bus Module (order code 85, 86, 87) when anti-aliasing filter is disabled 2nd to 15th harmonic including THD with a HardFiber Process Bus Module (order code 81)

VOLTAGE HARMONICS

Harmonics:	2nd to 25th harmonic: per phase, displayed as a % of $V(f_1)$ (voltage fundamental frequency phasor) THD: per phase, displayed as a % of $V(f_1)$
Accuracy:	
Harmonics:	with $V(f_1)$ 25 to 208 V: ±2% of reading or ±1% of 100%, whichever is greater
THD:	with $V(f_1)$ 25 to 208 V: ±2% of reading or ±1% of 100% per each harmonic, whichever is greater
Accuracy applies to:	2nd to 25th harmonic including THD with a regular CT/VT module 2nd to 10th harmonic including THD with a Process Bus Module (order code 85, 86, 87) when anti-aliasing filter is enabled 2nd to 16th harmonic including THD with a Process Bus Module (order code 85, 86, 87) when anti-aliasing filter is disabled 2nd to 15th harmonic including THD with a HardFiber Process Bus Module (order code 81)

FREQUENCY

Accuracy for 20 to 65 Hz input at	
V = 0.8 to 1.2 pu:	±0.001 Hz (when voltage signal is used for frequency measurement)
I = 0.1 to 0.25 pu:	±0.02 Hz (when current signal is used for frequency measurement)
I > 0.25 pu:	±0.005 Hz (when current signal is used for frequency measurement)

DEMAND

Measurements:	Phases A, B, and C present and maximum measured currents 3-Phase Power (P, Q, and S) present and maximum measured currents
Accuracy:	±2.0%

2.5.5 Inputs

AC CURRENT

CT rated primary:	1 to 50000 A
CT rated secondary:	1 or 5 A by connection
Relay burden:	< 0.2 VA at rated secondary
Conversion range:	
Standard CT:	0.02 to 46 × CT rating RMS symmetrical
Sensitive Ground CT module:	0.002 to 4.6 × CT rating RMS symmetrical
Current withstand:	20 ms at 250 times rated 1 sec at 100 times rated continuous 4x Inom
Short circuit rating:	150000 RMS symmetrical amperes, 250 V maximum (primary current to external CT)

AC VOLTAGE

VT rated secondary:	25.0 to 240.0 V
VT ratio:	1.00 to 24000.00
Relay burden:	< 0.25 VA at 120 V
Conversion range:	1 to 275 V
Voltage withstand:	continuous at 260 V to neutral 1 min/hr at 420 V to neutral

FREQUENCY

Nominal frequency setting:	25 to 60 Hz
Sampling frequency:	64 samples per power cycle
Tracking frequency range with DSP:	20 to 70 Hz
with Process Bus Module 81, 85, 86, 87:	20 to 65 Hz

CONTACT INPUTS

Dry contacts:	1000 Ω maximum
Wet contacts:	300 V DC maximum
Selectable thresholds:	17 V, 33 V, 84 V, 166 V

2

Tolerance:	±10%
Contacts per common return:	4
Recognition time:	< 1 ms
Debounce time:	0.0 to 16.0 ms in steps of 0.5
Continuous current draw:	4 mA (when energized)

CONTACT INPUTS WITH AUTO-BURNISHING

Dry contacts:	1000 Ω maximum
Wet contacts:	300 V DC maximum
Selectable thresholds:	17 V, 33 V, 84 V, 166 V
Tolerance:	±10%
Contacts per common return:	2
Recognition time:	< 1 ms
Debounce time:	0.0 to 16.0 ms in steps of 0.5
Continuous current draw:	4 mA (when energized)
Auto-burnish impulse current:	50 to 70 mA
Duration of auto-burnish impulse:	25 to 50 ms

DCMA INPUTS

Current input (mA DC):	0 to –1, 0 to +1, –1 to +1, 0 to 5, 0 to 10, 0 to 20, 4 to 20 (programmable)
Input impedance:	379 Ω ±10%
Conversion range:	–1 to + 20 mA DC
Accuracy:	±0.2% of full scale
Type:	Passive

RTD INPUTS

Types (3-wire):	100 Ω Platinum, 100 and 120 Ω Nickel, 10 Ω Copper
Sensing current:	5 mA
Range:	–50 to +250°C
Accuracy:	±2°C
Isolation:	36 V pk-pk

IRIG-B INPUT

IRIG formats accepted:	B000, B001, B004, B005, B120, B121, B124, B125
IRIG control bits:	IEEE Std C37.118.1-2011
Amplitude modulation:	1 to 10 V pk-pk
DC shift:	
Operating range:	0 to 10 V DC
TTL logic low:	0.0 to 0.8 V DC
TTL logic high:	2.0 to 5.0 V DC
Input impedance:	50 kΩ
Isolation:	2 kV

DIRECT INPUTS

Input points:	64
Remote devices:	16
Default states on loss of comms.:	On, Off, Latest/Off, Latest/On
Ring configuration:	Yes, No
Data rate:	64 or 128 kbps
CRC:	32-bit
CRC alarm:	
Responding to:	Rate of messages failing the CRC
Monitoring message count:	10 to 10000 in steps of 1
Alarm threshold:	1 to 1000 in steps of 1
Unreturned message alarm:	
Responding to:	Rate of unreturned messages in the ring configuration
Monitoring message count:	10 to 10000 in steps of 1

Alarm threshold: 1 to 1000 in steps of 1

TELEPROTECTION

Input points: 16
Remote devices: 3
Default states on loss of comms.: On, Off, Latest/Off, Latest/On
Ring configuration: No
Data rate: 64 or 128 kbps
CRC: 32-bit

2.5.6 Power supply

LOW RANGE

Nominal DC voltage: 24 to 48 V
Minimum DC voltage: 20 V
Maximum DC voltage: 75 V for SL power supply module
Voltage loss hold-up: 200 ms duration at maximum load
NOTE: Low range is DC only.

HIGH RANGE

Nominal DC voltage: 125 to 250 V
Minimum DC voltage: 88 V
Maximum DC voltage: 300 V
Nominal AC voltage: 100 to 240 V at 50/60 Hz
Minimum AC voltage: 88 V at 25 to 100 Hz
Maximum AC voltage: 265 V at 25 to 100 Hz
Voltage loss hold-up: 200 ms duration at maximum load

ALL RANGES

Volt withstand: 2 × Highest Nominal Voltage for 10 ms
Power consumption: typical = 15 to 20 W/VA
maximum = 45 W/VA
contact factory for exact order code consumption

INTERNAL FUSE

Ratings:
Low range power supply: 8 A / 250 V
High range power supply: 4 A / 250 V
Interrupting capacity:
AC: 100 000 A RMS symmetrical
DC: 10 000 A

2.5.7 Outputs

FORM-A RELAY

Make and carry for 0.2 s: 30 A as per ANSI C37.90
Carry continuous: 6 A
Break (DC inductive, L/R = 40 ms):

Voltage	Current
24 V	1 A
48 V	0.5 A
125 V	0.3 A
250 V	0.2 A

Operate time: < 4 ms

Contact material: silver alloy

LATCHING RELAY

Make and carry for 0.2 s: 30 A as per ANSI C37.90
Carry continuous: 6 A as per IEEE C37.90
Break (DC resistive as per IEC 61810-1):

Voltage	Current
24 V	6 A
48 V	1.6 A
125 V	0.4 A
250 V	0.2 A

Operate time: < 4 ms
Contact material: silver alloy
Control: separate operate and reset inputs
Control mode: operate-dominant or reset-dominant

FORM-A VOLTAGE MONITOR

Applicable voltage: approx. 15 to 250 V DC
Trickle current: approx. 1 to 2.5 mA

FORM-A CURRENT MONITOR

Threshold current: approx. 80 to 100 mA

FORM-C AND CRITICAL FAILURE RELAY

Make and carry for 0.2 s: 30 A as per ANSI C37.90
Carry continuous: 8 A
Break (DC inductive, L/R = 40 ms):

Voltage	Current
24 V	1 A
48 V	0.5 A
125 V	0.3 A
250 V	0.2 A

Operate time: < 8 ms
Contact material: silver alloy

FAST FORM-C RELAY

Make and carry: 0.1 A max. (resistive load)
Minimum load impedance:

Input voltage	Impedance	
	2 W Resistor	1 W Resistor
250 V DC	20 KΩ	50 KΩ
120 V DC	5 KΩ	2 KΩ
48 V DC	2 KΩ	2 KΩ
24 V DC	2 KΩ	2 KΩ

Note: values for 24 V and 48 V are the same due to a required 95% voltage drop across the load impedance.

Operate time: < 0.7 ms
Internal Limiting Resistor: 100 Ω, 2 W

SOLID-STATE OUTPUT RELAY

Operate and release time: <100 µs

Maximum voltage: 265 V DC
Maximum leakage current in off state
(excluding voltage monitor circuit current): 100 µA
Maximum continuous current: 5 A at 45°C; 4 A at 65°C
Make and carry:
for 0.2 s: 30 A as per ANSI C37.90
for 0.03 s: 300 A
Breaking capacity:

Specification	UL 508	Utility application (autoreclose scheme)	Industrial application
Operations per interval	5000 operations, 1 second on, 9 seconds off	5 operations, 0.2 seconds on, 0.2 seconds off, within 1 minute	10000 operations, 0.2 seconds on, 30 seconds off
	1000 operations, 0.5 seconds on, 0.5 seconds off		
Break capability (0 to 250 V DC)	3.2 A at L/R = 10 ms	10 A at L/R = 40 ms	10 A at L/R = 40 ms
	1.6 A at L/R = 20 ms		
	0.8 A L/R = 40 ms		

CONTROL POWER EXTERNAL OUTPUT (For dry contact input)
Capacity: 100 mA DC at 48 V DC*
Isolation: ±300 Vpk
*Note: Applicable only to SH and SL models and earlier. There is no DC output for the TH model.

DIRECT OUTPUTS
Output points: 64

DCMA OUTPUTS
Range: –1 to 1 mA, 0 to 1 mA, 4 to 20 mA
Max. load resistance: 12 kΩ for –1 to 1 mA range
12 kΩ for 0 to 1 mA range
600 Ω for 4 to 20 mA range
Accuracy: ±0.75% of full-scale for 0 to 1 mA range
±0.5% of full-scale for –1 to 1 mA range
±0.75% of full-scale for 0 to 20 mA range
99% Settling time to a step change: 100 ms
Isolation: 1.5 kV
Driving signal: any FlexAnalog quantity
Upper and lower limit for the driving signal: –90 to 90 pu in steps of 0.001

2.5.8 Communication protocols

IEC 61850
IEC 61850: Supports IEC 61850 Editions 1.0 and 2.0. See the UR Family Communications Guide and its conformance statements.

RS232 (Enhanced and basic front panels)
Front port: 19.2 kbps, Modbus RTU

USB (Graphical front panel)
Front port: USB 2.0 type B

RS485
1 rear port: up to 115 kbps, Modbus RTU, DNP 3, IEC 60870-5-103
Typical distance: 1200 m

Isolation: 2 kV, isolated together at 36 Vpk

FIBER ETHERNET PORT

Operates with 50/125 µm and 62.5/125 µm multimode fiber

Parameter	Fiber type
	100 Mb multimode
Wavelength	1310 nm
Connector	LC
Transmit power	–20 dBm
Receiver sensitivity	–30 dBm
Power budget	10 dB
Maximum input power	–14 dBm
Typical distance	2 km
Full duplex	yes
Redundancy	yes

ETHERNET (10/100 MB TWISTED PAIR)

Modes: 10 Mb, 10/100 Mb (auto-detect)
Connector: RJ45

SIMPLE NETWORK TIME PROTOCOL (SNTP)

Clock synchronization error: <10 ms (typical)

PRECISION TIME PROTOCOL (PTP)

PTP IEEE Std 1588-2008 (version 2)
Power Profile (PP) per IEEE Standard PC37.238-2017
Clock: Slave-only ordinary clock when using station bus Ethernet interface
Boundary clock when using process bus Ethernet interface
Peer delay measurement mechanism

PARALLEL REDUNDANCY PROTOCOL (PRP) (IEC 62439-3 CLAUSE 4, 2012)

Ethernet ports used: 2 and 3
Networks supported: 10/100 Mb Ethernet

PROCESS BUS MODULE (NON-HARDFIBER)

Ethernet ports: 2 x 1000Base-SX, 1 Gbps LC connectors,
4 x 1000Base-SX (1 Gbps) + 4 x 100Base-FX (100 Mbps) LC connectors, or
4 x 100Base-FX, LC connectors
Number of sampled value (SV) streams: Up to 8
SV subscription profiles: IEC 61850-9-2LE (1 ASDU) or IEC 61869-9 (1 ASDU)
Sampling Rate:
IEC 61850-9-2: 4800 Hz (80 samples/cycle) fixed for 60 Hz - Protection class
4000 Hz (80 samples/cycle) fixed for 50 Hz - Protection class
IEC 61869-9: 4800 Hz for 60/50 Hz - Protection class
GOOSE support: P1 class 1 TxGOOSE, and 8 RxGOOSE
Network Config modes: IEC 62439-3:2012 PRP (ports 1 and2); IEC 62439-3:2012 HSR (ports 1 and 2); IEC 62439-3:2012 Dual HSR (ports 1 and 2, 5 and 6); or Point-to-Point (ports 1 to 8)
Time synchronization: IEC 61850-9-3 PTPv2 Utility profile; PTPv2/PP (IEEE C37.238-2017 over Process Bus Module; PTPv2/PP (IEEE C37.238-2017; or IRIG-B over CPU for PTP master
Time synchronization mode: Slave-only, master-slave on Process Bus Module, and slave-only on CPU
Simulation mode: Supported for both GOOSE and SV
Test mode (test, test/block): Supported for both GOOSE and SV

OTHER

TFTP, SFTP, HTTP, IEC 60870-5-104, Ethernet Global Data (EGD), IEEE C37.118

2.5.9 Inter-relay communications

SHIELDED TWISTED-PAIR INTERFACE OPTIONS

Interface type	Typical distance
RS422	1200 m
G.703	100 m

NOTE

RS422 distance is based on transmitter power and does not take into consideration the clock source provided by the user.

LINK POWER BUDGET AND MAXIMUM OPTICAL INPUT POWER

The following specifications apply to filter interface modules manufactured from January 2012.

Emitter, fiber type	Cable type	Transmit power	Received sensitivity	Power budget	Maximum optical input power
820 nm, Multimode	62.5/125 µm	-16 dBm	-32 dBm	16 dBm	-8 dBm
	50/125 µm	-20 dBm		12 dBm	
1300 nm, Multimode	62.5/125 µm	-16 dBm	-32 dBm	16 dBm	-8 dBm
	50/125 µm	-20 dBm		12 dBm	
1300 nm, Single mode	9/125 µm	-15 dBm	-32 dBm	17 dBm	-8 dBm
1300 nm Laser, Single mode	9/125 µm	0 dBm	-34 dBm	34 dBm	-8 dBm
1550 nm Laser, Single mode	9/125 µm	5 dBm	-34 dBm	39 dBm	-10 dBm

The following specifications apply to filter interface modules implemented before January 2012.

Emitter, fiber type	Transmit power	Received sensitivity	Power budget	Maximum optical input power
820 nm LED, Multimode	–20 dBm	–30 dBm	10 dB	–7.6 dBm
1300 nm LED, Multimode	–21 dBm	–30 dBm	9 dB	–11 dBm
1300 nm ELED, Single mode	–23 dBm	–32 dBm	9 dB	–14 dBm
1300 nm Laser, Single mode	–1 dBm	–30 dBm	29 dB	–14 dBm
1550 nm Laser, Single mode	+5 dBm	–30 dBm	35 dB	–14 dBm

NOTE

The power budgets are calculated from the manufacturer's worst-case transmitter power and worst case receiver sensitivity.

The power budgets for the 1300 nm ELED are calculated from the manufacturer's transmitter power and receiver sensitivity at ambient temperature. At extreme temperatures these values deviate based on component tolerance. On average, the output power decreases as the temperature is increased by a factor of 1 dB / 5 °C.

2

TYPICAL LINK DISTANCE

Emitter, fiber type	Cable type	Connector type	Typical distance	
			Before January 2012	From January 2012
820 nm LED, multimode	62.5/125 µm	ST	1.65 km	2 km
	50/125 µm	ST	1.65 km	2 km
1300 nm LED, multimode	62.5/125 µm	ST	4 km	5 km
	50/125 µm	ST	4 km	5 km
1300 nm ELED, single mode	9/125 µm	ST	11.4 km	20 km
1300 nm Laser, single mode	9/125 µm	ST	64 km	65 km
1550 nm Laser, single mode	9/125 µm	ST	105 km	125 km

NOTE

Typical distances listed are based on the following assumptions for system loss. As actual losses vary from one installation to another, the distance covered by your system can vary.

CONNECTOR LOSSES (Total of both ends)

ST connector: 0.7 dB (each)

FIBER LOSSES

820 nm multimode: 3 dB/km
1300 nm multimode: 1 dB/km
1300 nm single mode: 0.35 dB/km
1550 nm single mode: 0.25 dB/km
Splice losses: one splice every 2 km at 0.05 dB loss per splice

SYSTEM MARGIN

3 dB additional loss added to calculations to compensate for all other losses.

Compensated difference in transmitting and receiving (channel asymmetry) channel delays using GPS satellite clock: 10 ms

2.5.10 CyberSentry security

OPTIONS

Software options: Level 1

2.5.11 Graphical front panel

DISPLAY

Type: color graphical back-lit LCD display
Size: 7 inches (17.8 cm)
Resolution: 800 by 480 pixels
Pages: 5 single-line diagram pages with controls, status, and metering values
up to 8 annunciator pages with total of 96 annunciator windows
1 phasor metering page for each AC Source
5 tabular metering pages with dynamic metering and status
event records page with dynamic update
product information page
settings, actual values, error messages (targets)

LED INDICATORS

Functions:	5 device status indicators 9 event cause indicators 8 user-programmable pushbutton indicators

PUSHBUTTONS

Type:	membrane
Functions:	5 bottom Tab pushbuttons and 1 Home pushbutton for page recall 4 directional, 1 ENTER, and 1 ESCAPE pushbutton element selection 10 side pushbuttons for power system element control RESET pushbutton

INGRESS PROTECTION

IP code:	IP40 front (IP54 front with IP54 mounting collar accessory) IP10 back (IP20 back with IP20 cover accessory)

2.5.12 Environmental

AMBIENT TEMPERATURES

Maximum operating range:	–40 to 85°C
Continuous operating range:	–40 to 60°C[1]

1 Based on IEC 60068-2-1 and IEC 60068-2-2, Variant Bd and Ad for 16 hrs. The UR can operate up to a surrounding ambient of 85°C, however operating outside the recommended continuous temperature range for extended periods can result in MTBF degradation and decrease the response time of the LCD.

Ideal Storage Temperature Range:	15ºC to 27ºC

HUMIDITY

Humidity:	operating up to 95% (non-condensing) at 55°C (as per IEC 60068-2-30 variant 1, 6 days)
Ideal Storage Humidity Range:	30% to 60%
Relative Humidity (RH) Air Quality:	Proper ventilation is recommended

OTHER

Altitude:	2000 m (maximum)
Pollution degree:	II
Overvoltage category:	II
Ingress protection:	IP20 front, IP10 back (basic front panel and Rev. 1 enhanced front panel) IP40 front, IP10 back (Rev. 2 enhanced front panel) IP54 front with IP54 mounting collar accessory (Rev. 2 enhanced front panel)
Ingress protection with IP20 cover accessory:	IP20 back
Noise:	0 dB

2

2.5.13 Type tests

N60 TYPE TESTS

Test	Reference standard	Test level
Dielectric voltage withstand	EN 60255-5[1]	2.2 kV
Impulse voltage withstand	EN 60255-5[1]	5 kV
Damped oscillatory	IEC 61000-4-18 / IEC 60255-22-1	2.5 kV CM, 1 kV DM
Electrostatic discharge	EN 61000-4-2 / IEC 60255-22-2	Level 3
RF immunity	EN 61000-4-3 / IEC 60255-22-3	Level 3
Fast transient disturbance	EN 61000-4-4 / IEC 60255-22-4	Class A and B
Surge immunity	EN 61000-4-5 / IEC 60255-22-5	Level 3 and 4
Conducted RF immunity	EN 61000-4-6 / IEC 60255-22-6	Level 3
Power frequency immunity	EN 61000-4-7[1] / IEC 60255-22-7	Class A and B
Voltage interruption and ripple DC	IEC 60255-11	12% ripple, 200 ms interrupts
Radiated and conducted emissions	CISPR11 / CISPR22 / IEC 60255-25	Class A
Sinusoidal vibration	IEC 60255-21-1	Class 1
Shock and bump	IEC 60255-21-2	Class 1
Seismic	IEC 60255-21-3	Class 1
Power magnetic immunity	IEC 61000-4-8	Level 5
Pulse magnetic immunity	IEC 61000-4-9	Level 4
Damped magnetic immunity	IEC 61000-4-10	Level 4
Voltage dip and interruption	IEC 61000-4-11	0, 40, 70, 80% dips; 250 / 300 cycle interrupts
Damped oscillatory	IEC 61000-4-12[1]	2.5 kV CM, 1 kV DM
Conducted RF immunity, 0 to 150 kHz	IEC 61000-4-16	Level 4
Voltage ripple	IEC 61000-4-17	15% ripple
Ingress protection	IEC 60529[1]	IP20 front, IP10 back
Cold	IEC 60068-2-1	–40°C for 16 hours
Hot	IEC 60068-2-2	85°C for 16 hours
Humidity	IEC 60068-2-30	6 days, variant 1
Damped oscillatory	IEEE/ANSI C37.90.1	2.5 kV, 1 MHz
RF immunity	IEEE/ANSI C37.90.2	20 V/m, 80 MHz to 1 GHz
Safety	UL 508	e83849 NKCR
		Section 43 - Temperature test Energization of Contact Inputs and/or Contact Outputs for continuous duty is not to exceed a total of 31 W of power
Safety	UL C22.2-14	e83849 NKCR7
Safety	UL 1053	e83849 NKCR
Safety	IEC 60255-27	Insulation: class 1, Pollution degree: 2, Over voltage cat II

1 Not tested by third party.

2.5.14 Production tests

THERMAL

Products go through an environmental test based upon an Accepted Quality Level (AQL) sampling process.

2.5.15 Approvals

APPROVALS

Compliance	Applicable council directive	According to
CE	Low voltage directive	EN 60255-5
	EMC directive	EN 60255-26 / EN 50263
		EN 61000-6-5
C-UL-US	---	UL 508
		UL 1053
		C22.2 No. 14

2.5.16 Maintenance

MOUNTING

Attach mounting brackets using 20 inch-pounds (±2 inch-pounds) of torque.

CLEANING

Normally, cleaning is not required. When dust has accumulated on the front panel display, wipe with a dry cloth.

NOTICE To avoid deterioration of electrolytic capacitors, power up units that are stored in a de-energized state once per year, for one hour continuously.

N60 Network Stability and Synchrophasor Measurement System

Chapter 3: Installation

This chapter outlines installation of hardware and software. You unpack, mount, wire the unit, turn on power, then install the software and configure settings.

3.1 Unpack and inspect

1. Open the package and check that the following items have been delivered:
   - The relay
   - Mounting screws
   - Certificate of Calibration
   - Test Report
   - EC Declaration of Conformity
   - Front panel label package
2. Inspect the unit for physical damage.
3. View the rear nameplate and verify that the correct model has been delivered. The model number is at the top right.
4. Any protective plastic film on the front panel is normally peeled off, but also can be left on.
5. For any issues, contact GE as outlined in the For Further Assistance section in chapter 1.
6. Check that you have the latest copy of the N60 Instruction Manual and the UR Family Communications Guide, for the applicable firmware version, available from the GE website.

Instruction manuals and software are not normally delivered with the device. You will need to download all relevant documentation and software from the GE website, unless you have specifically ordered printed copies of the documentation. You will need the following:

- GE EnerVista™ software and documentation
- Instruction Manual
- UR Family Communications Guide

The instruction manual outlines how to install, configure, and use the unit. The communications guide is for advanced use with communication protocols. The warranty is included at the end of this instruction manual and on the GE website.

3.2 Panel cutouts

This section does not apply to the HardFiber Brick; see its instruction manual.

Install the relay in an indoor environment within the environmental specifications. The relay complies with Pollution Category II, which means installation in an office, laboratory, or testing environment.

The N60 is available as a 19-inch rack horizontal mount unit with a removable front panel. The front panel is specified as enhanced, basic, or graphical at the time of ordering. The enhanced and graphical front panels have additional user-programmable pushbuttons and LED indicators, while the basic front panel has additional user-programmable pushbuttons.

The modular design allows the relay to be upgraded and repaired by qualified service personnel. The front panel is hinged to allow access to the modules. The front panel is itself removable to allow mounting on doors with limited rear depth and for upgrading.

In November 2017, GE began transitioning to a new enhanced horizontal front panel, referred to as the IP54 Front Panel or Enhanced Front Panel Rev. 2. This panel can be identified by the use of a screw instead of a knob to close the panel. It can conform to an IP54 rating with the IP54 mounting collar purchased separately. The IP54 mounting collar can be used in panel-mount installations, not 19-inch rack-mount installations. The IP54 mounting collar cannot be used with Rev. 1 enhanced front panels.

The case dimensions are shown in the following figures, along with panel cutout details for panel mounting. When planning the location of your panel cutout, ensure that provision is made for the front panel to swing open without interference to or from adjacent equipment.

Mount the relay such that the front panel sits semi-flush with the panel or switchgear door, allowing the operator access to the keypad and the front communications port.

Figure 3-1: Horizontal dimensions (Rev. 1 enhanced front panel)

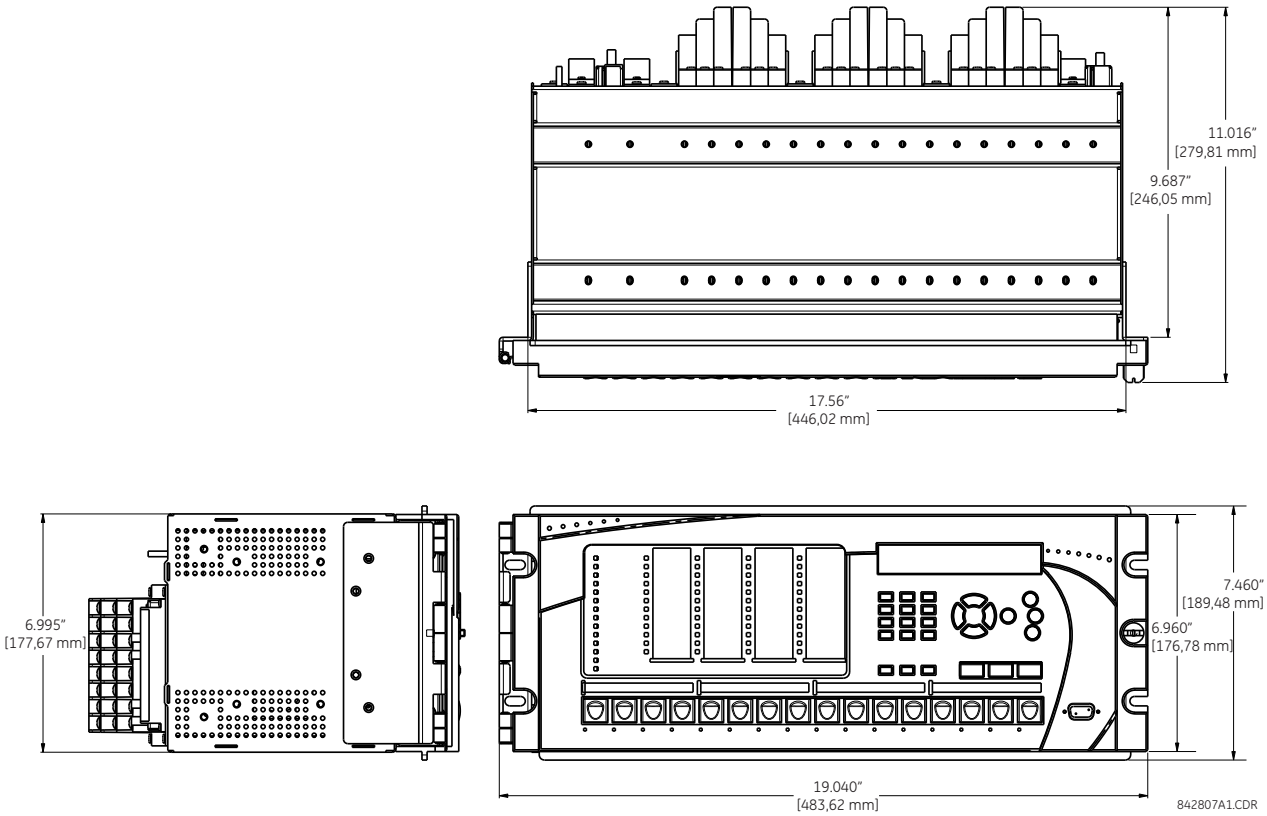

Figure 3-2: Horizontal dimensions (Rev. 2 enhanced front panel)

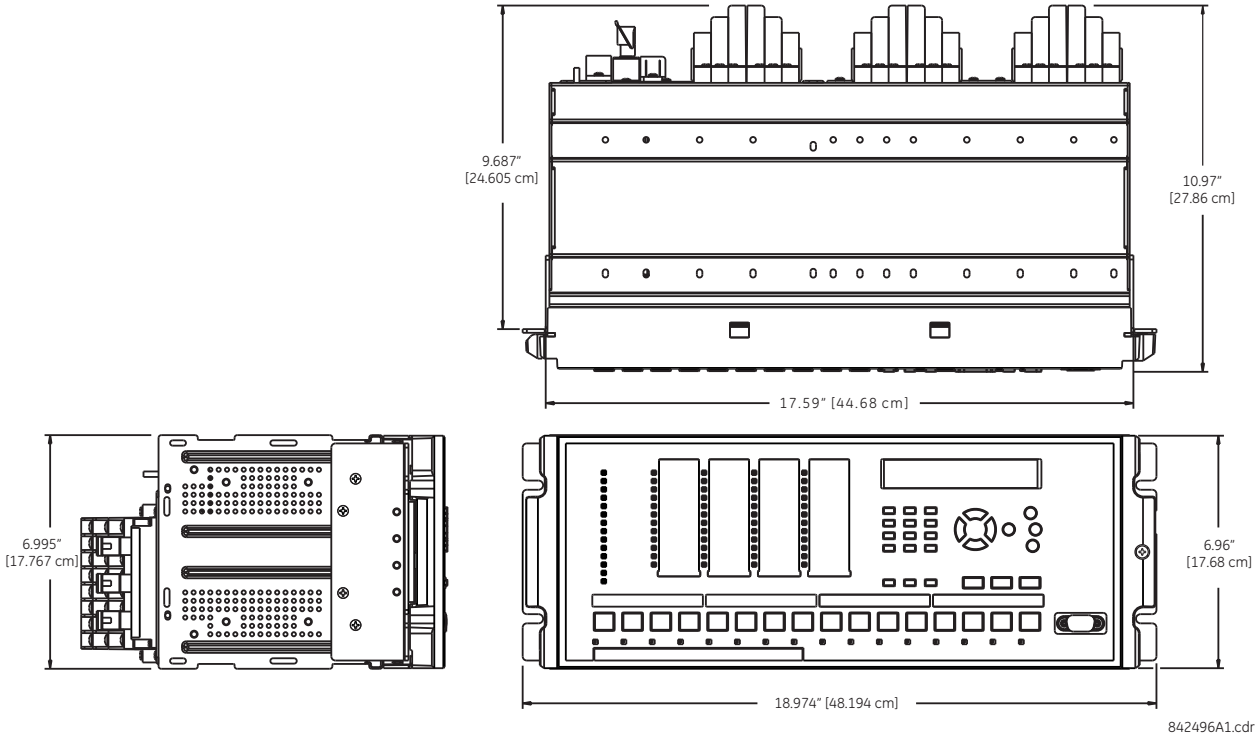

Figure 3-3: Horizontal mounting (enhanced and graphical front panels)

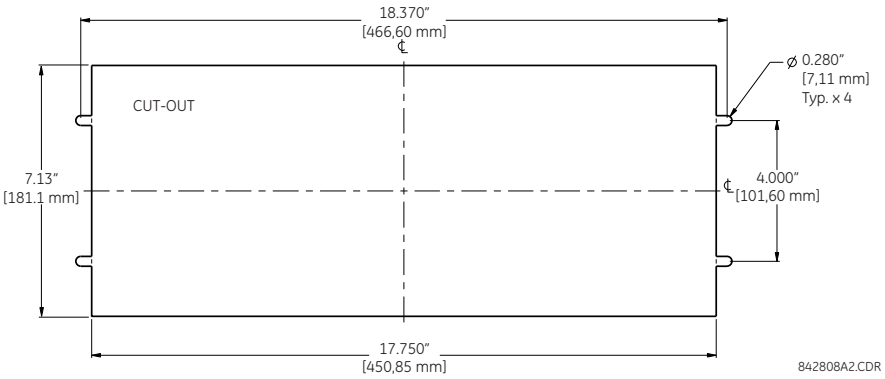

3

Figure 3-4: Horizontal dimensions and mounting (basic front panel)

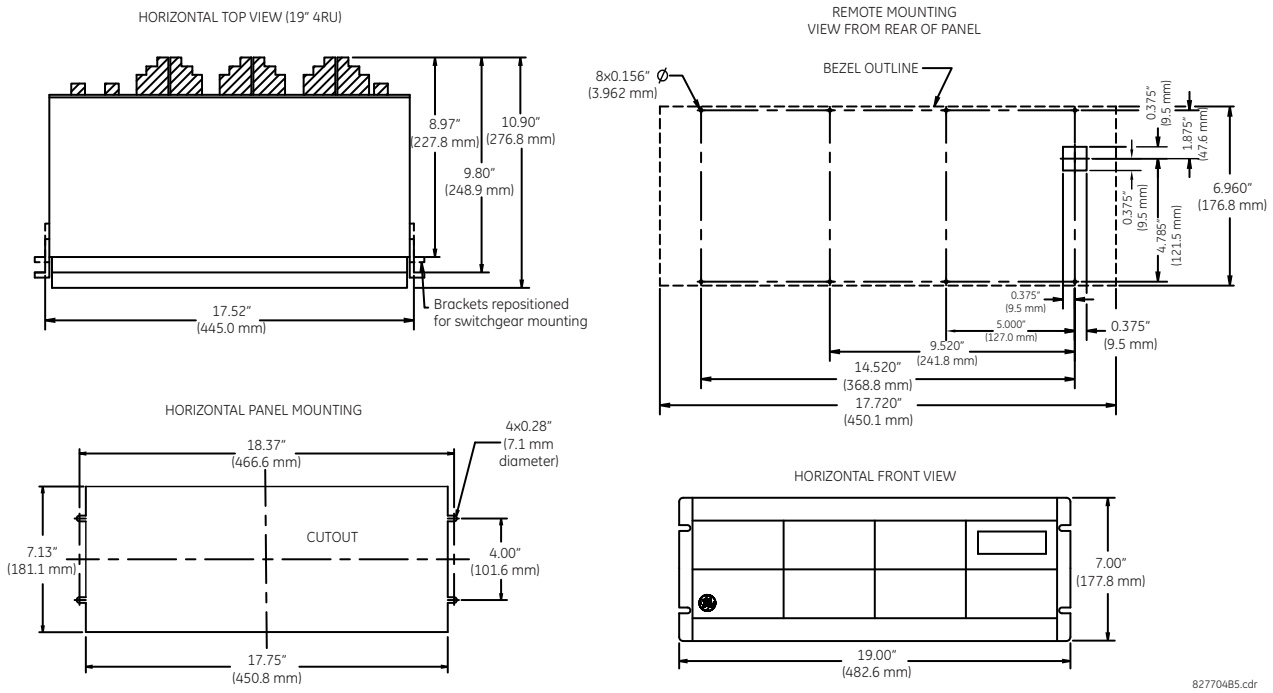

Figure 3-5: Horizontal dimensions (graphical front panel)

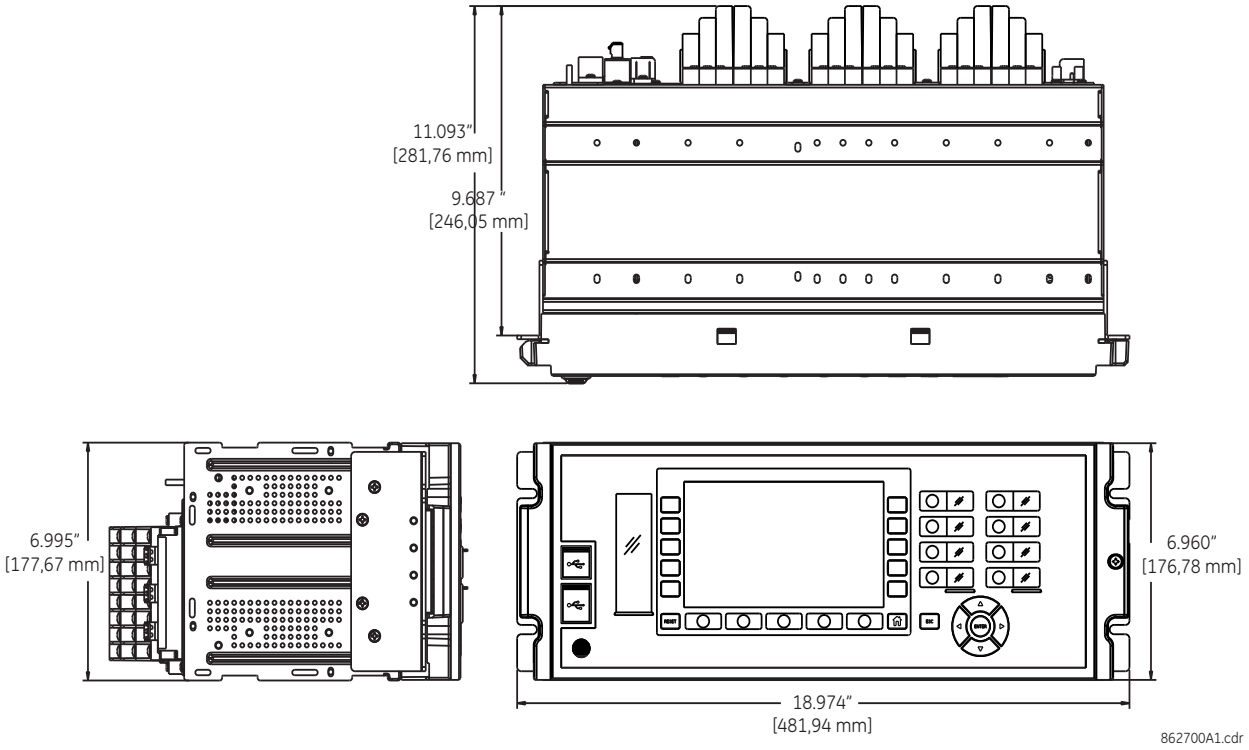

Figure 3-6: Horizontal dimensions (IP54 mounting collar)

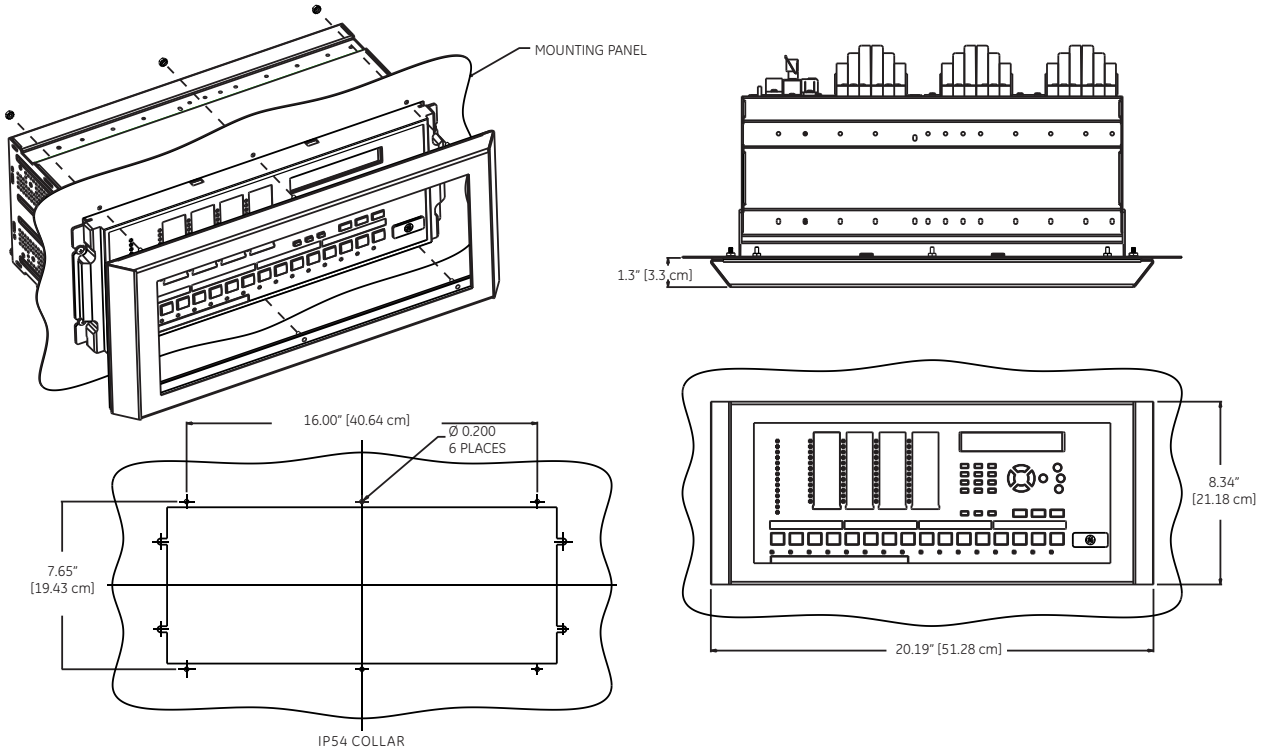

NOTES
1. INSPECT THE COLLAR BEFORE INSTALLATION, VERIFY GASKET IS ADHERED TO THE METAL ON ALL SIDES
2. MAKE SURE THE RELAY IS POSITIONED CENTER TO THE CUT OUT
3. INSTALL IP-54 COLLAR, CONFIRM THE GASKET PROPERLY MATES WITH THE PANEL ON ALL SIDES
SECURE USING #8-32 HEX NUT AT 6 PLACES.

842497A1.cdr

3.2.1 Rear terminal layout

The rear terminals depend on order code. An example is shown.

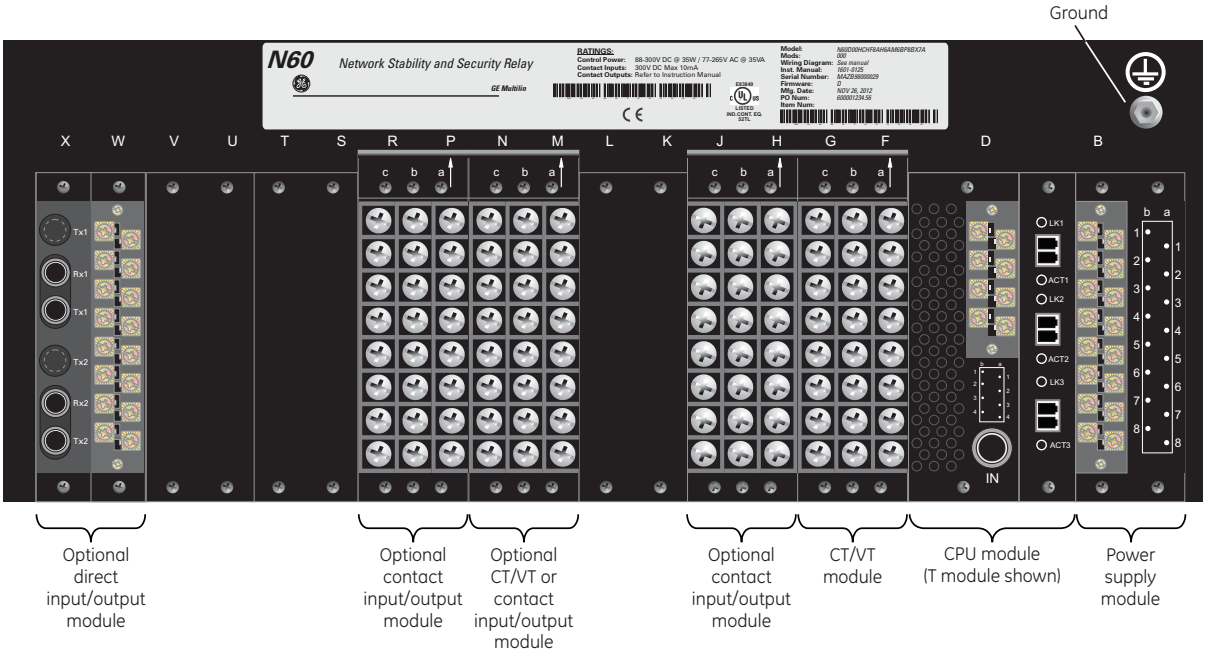

WARNING **Do not touch any rear terminals while the relay is energized, else death or serious injury can result from electrical shock.**

NOTICE Small form-factor pluggable ports (SFPs) are pluggable transceivers. They transmit, receive, and convert electrical signals to optical signals and vice-versa. Supplied with the device, they are inserted into the Ethernet ports on the CPU and/or Process Bus modules. A photo in the Maintenance chapter shows this plug-in device. Do not use non-validated transceivers or install validated transceivers in the wrong Ethernet slot, else damage can occur.

When using a copper SFP with a Process Bus Module, GE recommends limiting the length of the copper Ethernet cable to three meters (9.8 feet) and confining it within one bay/cubicle.

When using a Process Bus Module, to view if the SFP is 100 Mbps or 1 Gbps, enter the IP address of the N60 in a web browser and access **Process Card Menu > Process Card SFP Information**.

Terminal number assignments are three characters long and assigned by module slot position, row number, and column letter. Two-slot wide modules take their slot designation from the first slot position (nearest to CPU module), indicated by an arrow on the terminal block. The figure shows an example of rear terminal assignments.

Figure 3-7: Example of modules in F and H slots

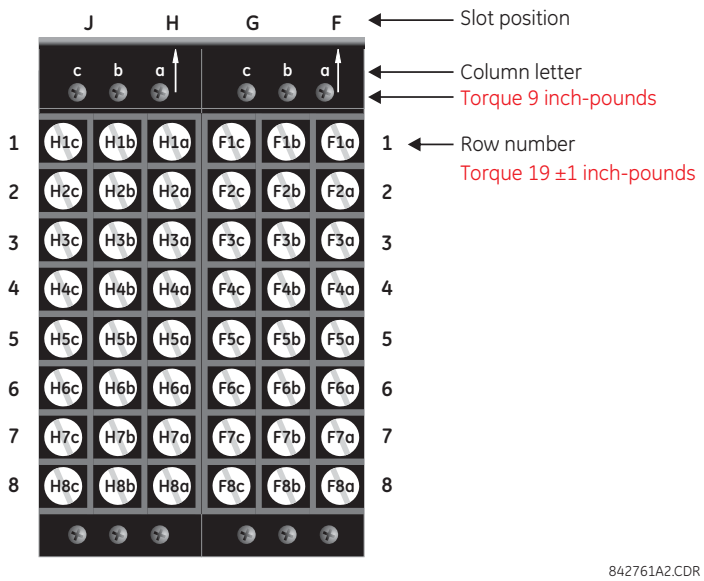

The torque used to connect the screws that connect the terminal blocks (top screws a, b, c) and the metal plates over empty slots to the chassis is 9 inch-pounds. For the screws used to wire the terminal blocks (rows 1 to 8), use 19±1 inch-pounds.

The CPU module type depends on order code. During manufacturing, the power supply and CPU modules are installed in slots B and D of the chassis with 13 inch-pounds of torque on the screws at the top and bottom of the modules. Wire connections to these two modules at 13 inch-pounds.

Figure 3-8: CPU modules and power supply

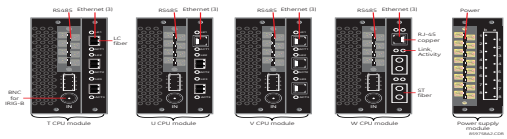

The following figure shows the optical connectors for CPU modules.

Figure 3-9: LC fiber connector (left) and ST fiber connector (right)

Speeds for the LC connections on non-HardFiber Process Bus Modules are as follows:

- Order code 85 — 1000Base-SX ports 1a and 1b, or ports 3a and 3b
- Order code 86 — 1000Base-SX ports 1a, 1b, 3a, 3b; 100Base-FX ports 2a, 2b, 4a, 4b
- Order code 87 — 100Base-FX ports 1a, 1b, 2a, 2b

3.3 Wiring

3.3.1 Typical wiring

NOTE

For Sampled Value (SV) applications using a Process Bus Module with order code 85, 86, or 87 with IRIG-B for synchronization, follow the recommended cables and grounding connections outlined here and later.

Figure 3-10: Typical wiring diagram (T module shown for CPU)

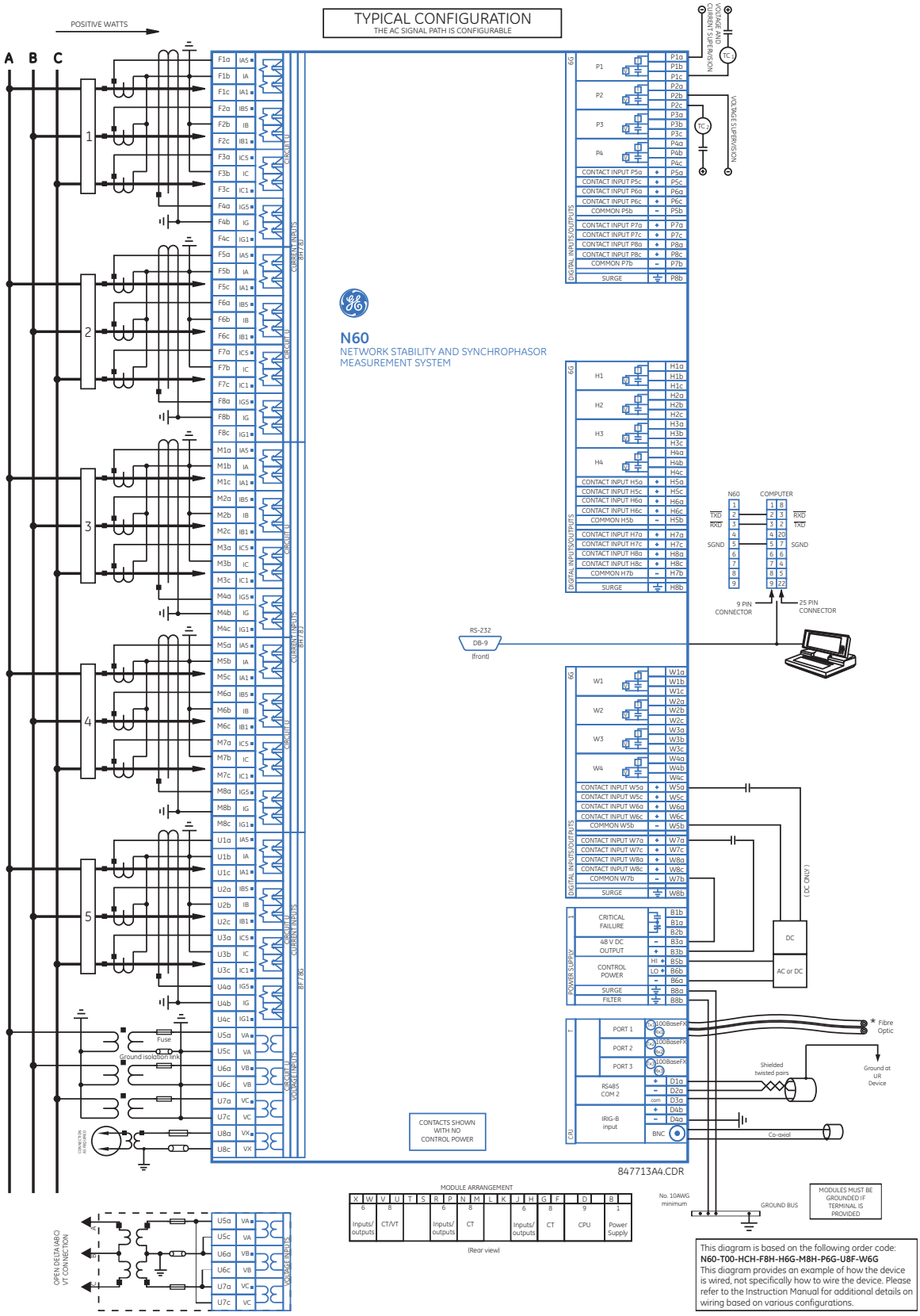

3.3.2 Dielectric strength

Dielectric strength is the maximum electric strength that can be sustained without breakdown. It is measured in volts.

The table shows the dielectric strength of the UR-series module hardware.

Table 3-1: Dielectric strength of UR modules

Module type	Module function	Terminals		Dielectric strength
		From	To	
1	Power supply	High (+); Low (+); (–)	Chassis	2000 V AC for 1 minute
1	Power supply	48 V DC (+) and (–)	Chassis	2000 V AC for 1 minute
1	Power supply	Relay terminals except terminals 8a and 8b	Chassis	2000 V AC for 1 minute
2	Reserved	N/A	N/A	N/A
3	Reserved	N/A	N/A	N/A
4	Digital contact inputs/ outputs	All	Chassis	2000 V AC for 1 minute
5	Analog inputs/outputs	All except 8b	Chassis	< 50 V DC
6	Digital contact inputs/ outputs	All	Chassis	2000 V AC for 1 minute
7	G.703	All except 2b, 3a, 7b, 8a	Chassis	2000 V AC for 1 minute
	RS422	All except 6a, 7b, 8a	Chassis	< 50 V DC
8	CT/VT	All	Chassis	2000 V AC for 1 minute
9	CPU	All	Chassis	2000 V AC for 1 minute

NOTICE Filter networks and transient protection clamps are used in the hardware to prevent damage caused by high peak voltage transients, radio frequency interference (RFI), and electromagnetic interference (EMI). These protective components can be damaged by application of the ANSI/IEEE C37.90 specified test voltage for longer than the specified minute.

3.3.3 Control power

NOTICE Power supplied to the relay must be connected to the matching power supply range of the relay. If incorrect voltage is applied or voltage is applied to the wrong terminals, damage can occur.

The N60, like almost all electronic relays, contains electrolytic capacitors. These capacitors are well-known to deteriorate over time if voltage is not applied periodically. Deterioration can be avoided by powering up the relay at least once a year.

The power supply module is ordered with one of two possible voltage ranges, and the N60 can be ordered with or without a redundant power supply module option. Each range has a dedicated input connection for proper operation. The ranges are as follows (see the Specifications section of chapter 2 for details):

- Low (LO) range — 24 to 48 V (DC only) nominal
- High (HI) range — 125 to 250 V nominal

All the power supply modules provide power to the relay and a critical failure relay. The critical failure relay is a form-C device that is energized once control power is applied and the relay has successfully booted up with no critical self-test failures. If ongoing self-test diagnostic checks detect a critical failure (see the Self-Test Errors section in chapter 7) or control power is lost, the relay de-energizes.

SL and SH modules also provide an control power external output of 48 V DC for dry contact input connections. The TH model does not provide this control power external output.

⚠WARNING **Connect all wires at the back of a UR before connecting to power, else death or serious injury can result from electrical shock.**

To connect power to the relay:

1. On the power supply module in the first slot, slot B, on the back of the device, connect the three wires to the terminals, or connect two to the terminals and the third to the ground screw. 14 gauge stranded wire with disconnect devices is recommended. Use 13 inch-pounds torque. Connect all wires to the relay before turning on power.

For high-reliability systems, the N60 has a redundant option in which two N60 power supplies are placed in parallel on the bus. If one of the power supplies becomes faulted, the second power supply assumes the full load of the relay without any interruptions. Each power supply has a green LED on the front of the module to indicate that it is functional. The critical fail relay of the module also indicates a faulted power supply.

An LED on the front of the control power module shows the status of the power supply, as outlined in the table.

Table 3-2: Power supply LED on module

LED indication	Power supply
Continuous on	OK
On/off cycling	Failure
Off	Failure or no power

Figure 3-11: Control power connection

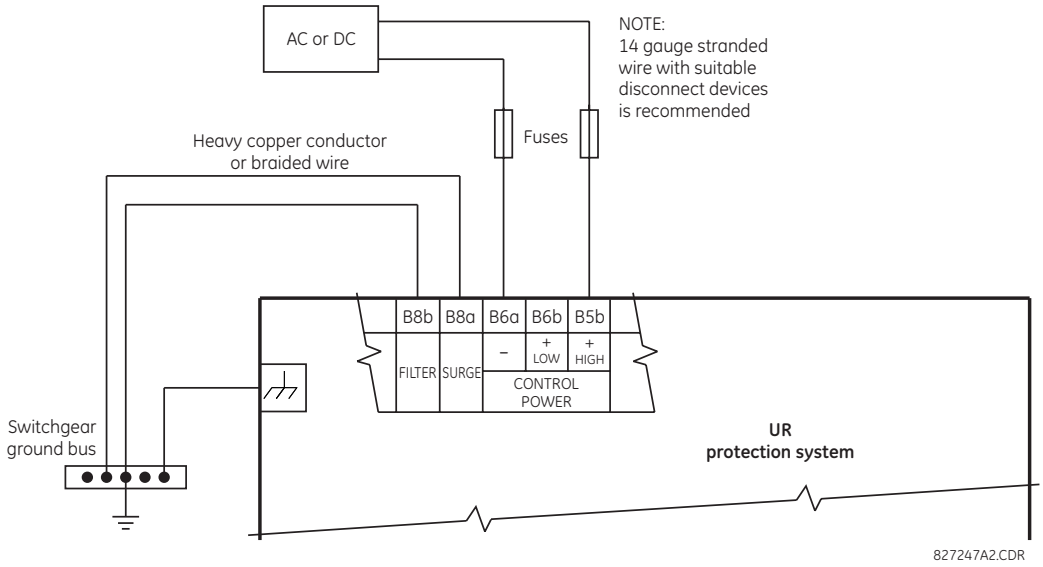

3.3.3.1 Non-volatile data storage

Non-volatile data is temporary data required after a power cycle for relay state, such as latch status before reboot. The relay saves this data in non-volatile storage every two minutes or when a state change occurs.

If a state change occurs just before a power down (less than two minutes) and the relay power is cycled, some temporary data can be saved and the prior state is retained at power up. Otherwise, a two-minute powered on period after a state change ensures that all temporary state changes required after reboot have been saved. A command also is available to initiate saving of data in the compact flash memory using **Commands > Relay Maintenance > Save Volatile Data**.

3.3.4 CT/VT modules

The CT and VT inputs are analog current transformer and voltage transformer signals used to monitor AC power lines. The UR-series relays support 1 A and 5 A CTs.

A CT/VT module can have current or voltage inputs on channels 1 through 4 inclusive, or channels 5 through 8 inclusive. Channels 1 and 5 are intended for connection to phase A, and are labelled as such in the relay. Likewise, channels 2 and 6 are intended for connection to phase B, and channels 3 and 7 are intended for connection to phase C.

Channels 4 and 8 are intended for connection to a single-phase source. For voltage inputs, these channels are labelled as auxiliary voltage (VX). For current inputs, these channels are intended for connection to a CT between system neutral and ground, and are labelled as ground current (IG).

NOTICE Verify that the connection made to the relay terminals for nominal current of 1 A or 5 A matches the secondary rating of the connected CTs. Unmatched CTs can result in equipment damage or inadequate protection.

To connect to the module, size 12 American Wire Gauge (AWG) is used commonly; the maximum size is 10 AWG.

CT/VT modules can be ordered with a standard ground current input that is the same as the phase current input. Each AC current input has an isolating transformer and an automatic shorting mechanism that shorts the input when the module is withdrawn from the chassis. There are no internal ground connections on the current inputs. Current transformers with 1 to 50000 A primaries and 1 A or 5 A secondaries can be used.

These modules have enhanced diagnostics that can detect automatically CT/VT hardware failure and take the relay out of service.

CT connections for both ABC and ACB phase rotations are identical, as shown in the Typical Wiring Diagram.

The exact placement of a zero-sequence core balance CT to detect ground fault current is shown as follows. Twisted-pair cabling on the zero-sequence CT is recommended.

Figure 3-12: Zero-sequence core balance CT installation

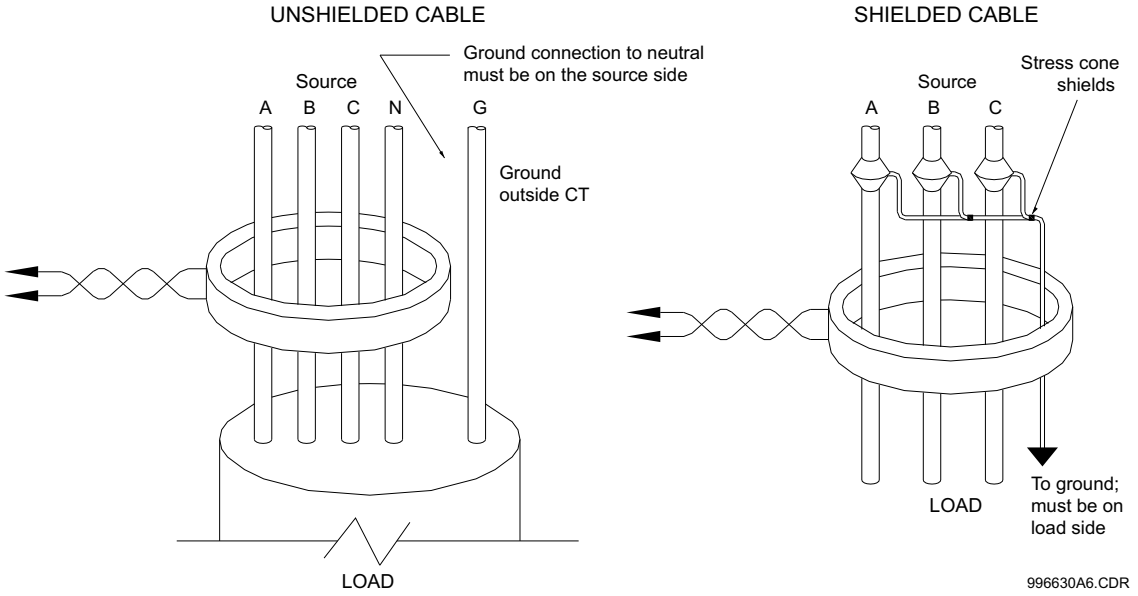

The phase voltage channels are used for most metering and protection purposes. The auxiliary voltage channel is used as input for the synchrocheck and volts-per-hertz features, which are optional features for some UR models.

NOTE Substitute the tilde "~" symbol with the slot position of the module in the following figure.

Figure 3-13: CT/VT module wiring

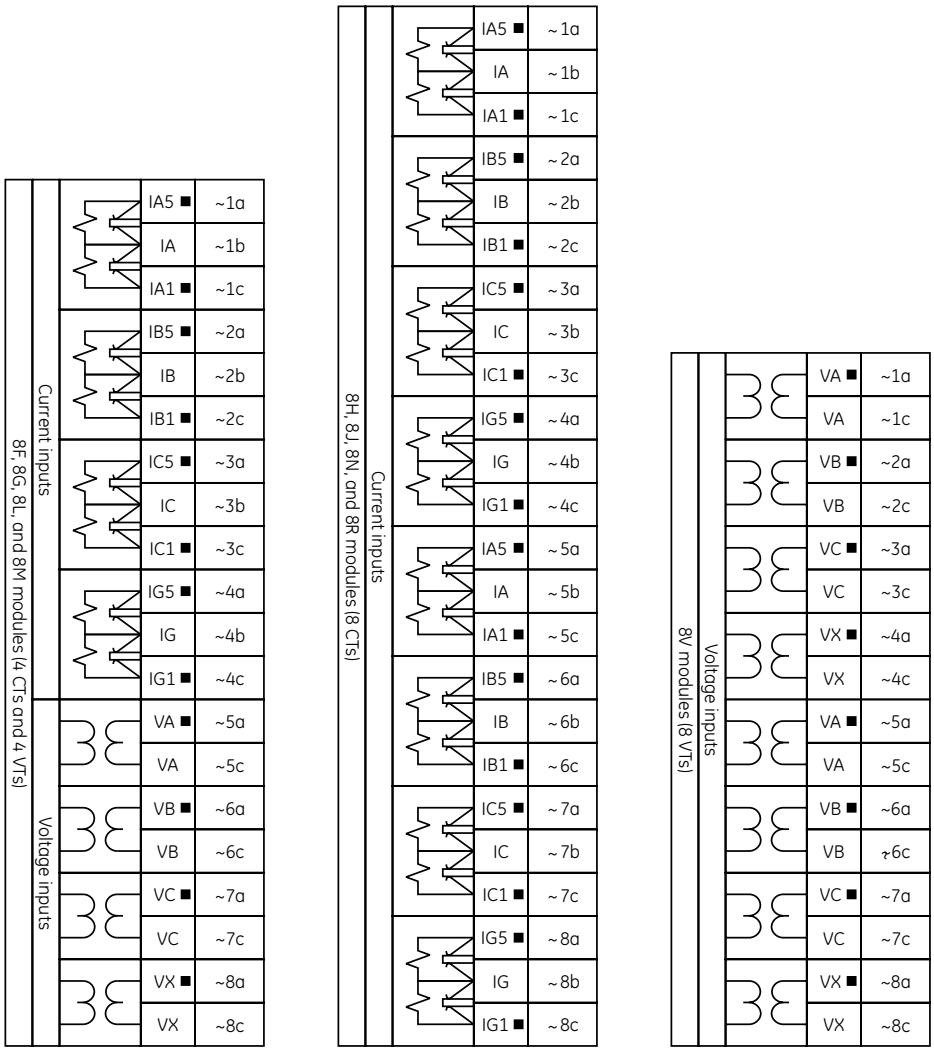

3.3.5 Process Bus Module for HardFiber

The N60 can be ordered with a process bus interface module to interface with the HardFiber Process Bus System, or HardFiber Brick, allowing bidirectional IEC 61850 fiber-optic communications with up to eight HardFiber Bricks. The HardFiber system integrates seamlessly with the existing UR-series applications, including protection functions, FlexLogic, metering, and communications.

This process bus system offers the following benefits:

- Reduces labor associated with design, installation, and testing of protection and control applications using the UR by reducing the number of individual copper terminations
- Integrates seamlessly with existing UR applications, since the IEC 61850 process bus interface module replaces the traditional CT/VT modules
- Communicates using open standard IEC 61850 messaging

For details on the HardFiber system, see its Instruction Manual.

3.3.6 Contact inputs and outputs

Nearly all contact input/output modules have 24 terminal connections. The connections are arranged typically as three terminals per row, with eight rows in total. A given row of three terminals can be used for the outputs of one relay. For example, for form-C relay outputs, the terminals connect to the normally open (NO), normally closed (NC), and common contacts of the relay. For a form-A output, there are options of using current or voltage detection for feature supervision, depending on the module ordered. The terminal configuration for contact inputs is different for the two applications.

The contact inputs are grouped with a common return. The input/output modules have three versions of grouping: four inputs per common return, five inputs per common return on a high-density module, and two inputs per common return. When a contact input/output module is ordered, four inputs per common is used. If the inputs must be isolated per row, then two inputs per common return are selected (4D module). If the space limitation in the relay requires use of a high-density input module (6W), five inputs share one common return and the module has six banks of inputs.

The tables and diagrams that follow illustrate the module types (6A and so on) and contact arrangements that can be ordered for the relay. Since an entire row is used for a single contact output, the name is assigned using the module slot position and row number. However, since there are two contact inputs per row, these names are assigned by module slot position, row number, and column position.

Some form-A / solid-state relay outputs include circuits to monitor the DC voltage across the output contact when it is open, and the DC current through the output contact when it is closed. Each of the monitors contains a level detector whose output is set to logic “On = 1” when the current in the circuit is above the threshold setting. The voltage monitor is set to “On = 1” when there is a voltage across open contact (the detector allows a current of about 1 to 2.5 mA), and the current monitor is set to “On = 1” when the current flowing through the closed contact exceeds about 80 to 100 mA. The voltage monitor is intended to check the health of the overall trip circuit, and the current monitor can be used to seal-in the output contact until an external contact has interrupted current flow. If enabled, the current monitoring can be used as a seal-in signal to ensure that the form-A contact does not attempt to break the energized inductive coil circuit and weld the output contacts.

Block diagrams are shown as follows for form-A and solid-state relay outputs with optional voltage monitor, optional current monitor, and with no monitoring. The actual values shown for contact output 1 are the same for all contact outputs. Form-A contact output with or without a current or voltage monitoring option is not polarity sensitive. The polarity shown in the figure is required for solid-state contact output connection.

Figure 3-14: Form-A and solid-state contact outputs with voltage and current monitoring

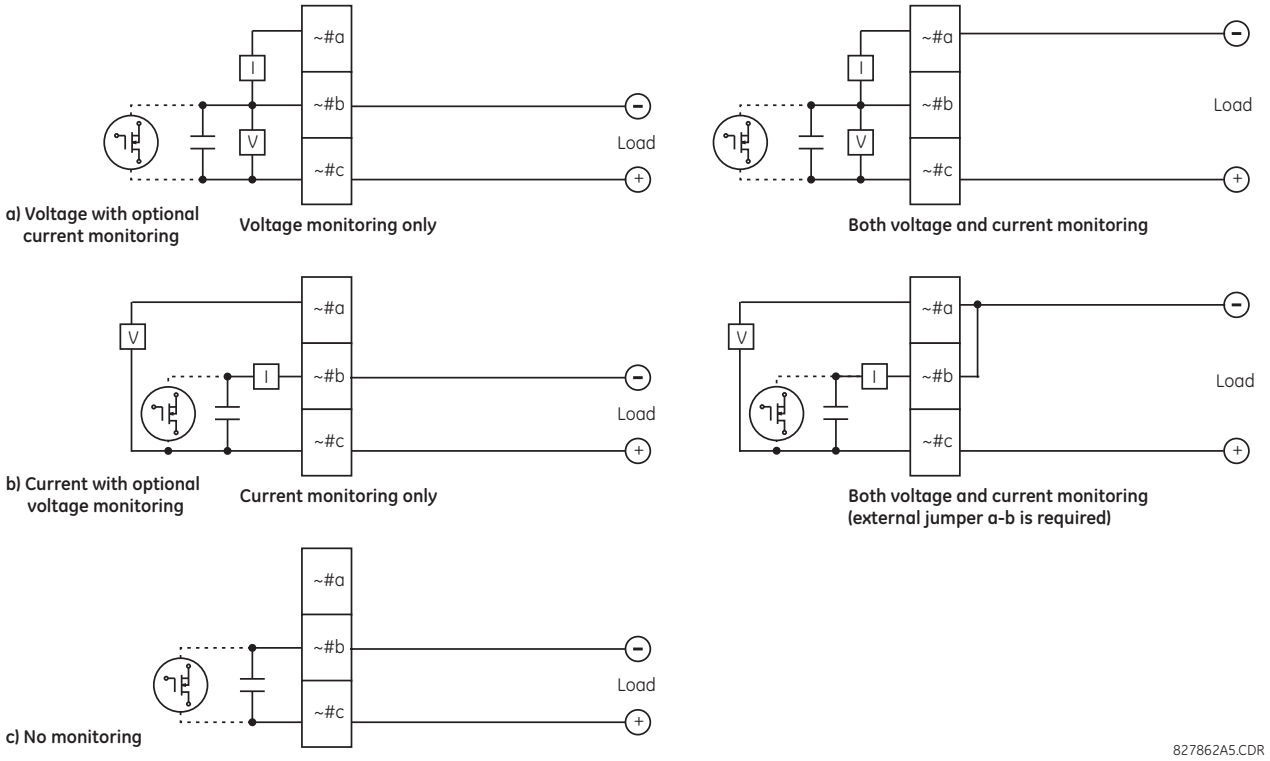

The operation of voltage and current monitors is reflected with the corresponding FlexLogic operands (CONT OP # VON, CONT OP # VOFF, and CONT OP # ION) that can be used in protection, control, and alarm logic. The typical application of the voltage monitor is breaker trip circuit integrity monitoring; a typical application of the current monitor is seal-in of the control command.

See the Digital Elements section of chapter 5 for an example of how form-A and solid-state relay contacts can be applied for breaker trip circuit integrity monitoring.

WARNING **Consider relay contacts unsafe to touch when the unit is energized. Death or serious injury can result from touching live relay contacts.**

NOTE

USE OF FORM-A AND SOLID-STATE RELAY OUTPUTS IN HIGH-IMPEDANCE CIRCUITS

For form-A and solid-state relay output contacts internally equipped with a voltage measuring circuit across the contact, the circuit has an impedance that can cause a problem when used in conjunction with external high-input impedance monitoring equipment, such as modern relay test set trigger circuits. These monitoring circuits can continue to read the form-A contact as being closed after it has closed and subsequently opened, when measured as an impedance.

The solution is to use the voltage measuring trigger input of the relay test set, and connect the form-A contact through a voltage-dropping resistor to a DC voltage source. If the 48 V DC output of the power supply is used as a source, a 500 Ω, 10 W resistor is appropriate. In this configuration, the voltage across either the form-A contact or the resistor can be used to monitor the state of the output.

NOTE

Where a tilde "~" symbol appears, substitute the slot position of the module. Where a number sign "#" appears, substitute the contact number.

NOTICE When current monitoring is used to seal-in the form-A and solid-state relay contact outputs, give the FlexLogic operand driving the contact output a reset delay of 10 ms to prevent damage of the output contact (in situations when the element initiating the contact output is bouncing, at values in the region of the pickup value).

For high-density input/output modules 6W and 6X, use the following guidelines to connect. The new I/O modules use pin type terminal blocks instead of the current ring type. The new terminals are required to achieve higher I/O count per module.

- 12 to 24 AWG (3.3 mm^2 to 0.2 mm^2), single wire termination
- 16 to 24 AWG (1.31 mm^2 to 0.2 mm^2), multiple wire termination with matching wire sizes and stranding. Two wires maximum per circuit
- Suggested wiring screw tightening torque is a minimum 4.43 in-lb (0.5 Nm) and maximum 5.31 in-lb (0.6 Nm)
- Minimum suggested temperature rating for the conductors is 75°C
- Wire type: copper

For module types 67, 6A, 6B, 6C, 6D, 6E, 6F, 6G, 6H, 6K, 6L, 6M, 6N, 6P, 6R, 6S, 6T, 6U, 6V, 4A, 4B, 4C, 4D, and 4L, use the following guidelines to connect:

- 12 to 24 AWG (3.3 mm^2 to 0.2 mm^2)
- Wiring screw tightening torque is 19 inch-pounds, (2.15 Nm)
- Minimum suggested temperature rating for the conductors is 75°C
- Wire type: copper

Table 3-3: Contact input and output module assignments

~6A module	
Terminal assignment	**Output or input**
~1	Form-A
~2	Form-A
~3	Form-C
~4	Form-C
~5a, ~5c	2 Inputs
~6a, ~6c	2 Inputs
~7a, ~7c	2 Inputs
~8a, ~8c	2 Inputs

~6B module	
Terminal assignment	**Output or input**
~1	Form-A
~2	Form-A
~3	Form-C
~4	Form-C
~5	Form-C
~6	Form-C
~7a, ~7c	2 Inputs
~8a, ~8c	2 Inputs

~6C module	
Terminal assignment	**Output**
~1	Form-C
~2	Form-C
~3	Form-C
~4	Form-C
~5	Form-C
~6	Form-C
~7	Form-C
~8	Form-C

~6D module	
Terminal assignment	**Output**
~1a, ~1c	2 Inputs
~2a, ~2c	2 Inputs
~3a, ~3c	2 Inputs
~4a, ~4c	2 Inputs
~5a, ~5c	2 Inputs
~6a, ~6c	2 Inputs
~7a, ~7c	2 Inputs
~8a, ~8c	2 Inputs

~6E module	
Terminal assignment	**Output or input**
~1	Form-C
~2	Form-C
~3	Form-C
~4	Form-C
~5a, ~5c	2 Inputs
~6a, ~6c	2 Inputs
~7a, ~7c	2 Inputs
~8a, ~8c	2 Inputs

~6F module	
Terminal assignment	**Output**
~1	Fast Form-C
~2	Fast Form-C
~3	Fast Form-C
~4	Fast Form-C
~5	Fast Form-C
~6	Fast Form-C
~7	Fast Form-C
~8	Fast Form-C

~6G module	
Terminal assignment	**Output or input**
~1	Form-A
~2	Form-A
~3	Form-A
~4	Form-A
~5a, ~5c	2 Inputs
~6a, ~6c	2 Inputs
~7a, ~7c	2 Inputs
~8a, ~8c	2 Inputs

~6H module	
Terminal assignment	**Output or input**
~1	Form-A
~2	Form-A
~3	Form-A
~4	Form-A
~5	Form-A
~6	Form-A
~7a, ~7c	2 Inputs
~8a, ~8c	2 Inputs

~6K module	
Terminal assignment	**Output**
~1	Form-C
~2	Form-C
~3	Form-C
~4	Form-C
~5	Fast Form-C
~6	Fast Form-C
~7	Fast Form-C
~8	Fast Form-C

~6L module	
Terminal assignment	**Output or input**
~1	Form-A
~2	Form-A
~3	Form-C
~4	Form-C
~5a, ~5c	2 Inputs
~6a, ~6c	2 Inputs
~7a, ~7c	2 Inputs
~8a, ~8c	2 Inputs

~6M module	
Terminal assignment	**Output or input**
~1	Form-A
~2	Form-A
~3	Form-C
~4	Form-C
~5	Form-C
~6	Form-C
~7a, ~7c	2 Inputs
~8a, ~8c	2 Inputs

~6N module	
Terminal assignment	**Output or input**
~1	Form-A
~2	Form-A
~3	Form-A
~4	Form-A
~5a, ~5c	2 Inputs
~6a, ~6c	2 Inputs
~7a, ~7c	2 Inputs
~8a, ~8c	2 Inputs

~6P module	
Terminal assignment	**Output or input**
~1	Form-A
~2	Form-A
~3	Form-A
~4	Form-A
~5	Form-A
~6	Form-A
~7a, ~7c	2 Inputs
~8a, ~8c	2 Inputs

~6R module	
Terminal assignment	**Output or input**
~1	Form-A
~2	Form-A
~3	Form-C
~4	Form-C
~5a, ~5c	2 Inputs
~6a, ~6c	2 Inputs
~7a, ~7c	2 Inputs
~8a, ~8c	2 Inputs

~6S module	
Terminal assignment	**Output or input**
~1	Form-A
~2	Form-A
~3	Form-C
~4	Form-C
~5	Form-C
~6	Form-C
~7a, ~7c	2 Inputs
~8a, ~8c	2 Inputs

~6T module	
Terminal assignment	**Output or input**
~1	Form-A
~2	Form-A
~3	Form-A
~4	Form-A
~5a, ~5c	2 Inputs
~6a, ~6c	2 Inputs
~7a, ~7c	2 Inputs
~8a, ~8c	2 Inputs

~6U module	
Terminal assignment	**Output or input**
~1	Form-A
~2	Form-A
~3	Form-A
~4	Form-A
~5	Form-A
~6	Form-A
~7a, ~7c	2 Inputs
~8a, ~8c	2 Inputs
---	---
---	---
---	---
---	---
---	---
---	---
---	---
---	---
---	---
---	---

~6V module	
Terminal assignment	**Output or input**
~1	Form-A
~2	Form-A
~3	Form-C
~4	2 Outputs
~5a, ~5c	2 Inputs
~6a, ~6c	2 Inputs
~7a, ~7c	2 Inputs
~8a, ~8c	2 Inputs
---	---
---	---
---	---
---	---
---	---
---	---
---	---
---	---
---	---
---	---

~6W module	
Terminal assignment	**Output or input**
~1a	Input
~2a	Input
~3a	Input
~4a	Input
~5a	Input
~7a	Input
~8a	Input
~9a	Input
~10a	Input
~11a	Input
~13a	Input
~14a	Input
~15a	Input
~16a	Input
~17a	Input
~1b	Input
~2b	Input
~3b	Input

6X module	
Terminal assignment	**Output or input**
~1a, ~2a	Form-A
~3a, ~4a	Form-A
~5a, ~6a	Form-A
~7a, ~8a	Form-A
~9a, ~10a	Form-A
~11a, ~12a	Form-A
~13a, ~14a	Form-A
~15a, ~16a	Form-A
~17a, ~18a	Form-A
~1b, ~2b	Form-A
~3b, ~4b	Form-A
~5b, ~6b	Form-A
~7b, ~8b	Form-A
~9b, ~10b	Form-A
~11b, ~12b	Form-A
~13b, ~14b	Form-A
~15b, ~16b	Form-A
~17b, ~18b	Form-A

3

~6U module	
Terminal assignment	**Output or input**
---	---
---	---
---	---
---	---
---	---
---	---
---	---
---	---
---	---
---	---
---	---
---	---

~6V module	
Terminal assignment	**Output or input**
---	---
---	---
---	---
---	---
---	---
---	---
---	---
---	---
---	---
---	---
---	---
---	---

~6W module	
Terminal assignment	**Output or input**
~4b	Input
~5b	Input
~7b	Input
~8b	Input
~9b	Input
~10b	Input
~11b	Input
~13b	Input
~14b	Input
~15b	Input
~16b	Input
~17b	Input

6X module	
Terminal assignment	**Output or input**
---	---
---	---
---	---
---	---
---	---
---	---
---	---
---	---
---	---
---	---
---	---
---	---

~67 module	
Terminal assignment	**Output**
~1	Form-A
~2	Form-A
~3	Form-A
~4	Form-A
~5	Form-A
~6	Form-A
~7	Form-A
~8	Form-A

~4A module	
Terminal assignment	**Output**
~1	Not Used
~2	Solid-State
~3	Not Used
~4	Solid-State
~5	Not Used
~6	Solid-State
~7	Not Used
~8	Solid-State

~4B module	
Terminal assignment	**Output**
~1	Not Used
~2	Solid-State
~3	Not Used
~4	Solid-State
~5	Not Used
~6	Solid-State
~7	Not Used
~8	Solid-State

~4C module	
Terminal assignment	**Output**
~1	Not Used
~2	Solid-State
~3	Not Used
~4	Solid-State
~5	Not Used
~6	Solid-State
~7	Not Used
~8	Solid-State

~4D module	
Terminal assignment	**Output**
~1a, ~1c	2 Inputs
~2a, ~2c	2 Inputs
~3a, ~3c	2 Inputs
~4a, ~4c	2 Inputs
~5a, ~5c	2 Inputs
~6a, ~6c	2 Inputs
~7a, ~7c	2 Inputs
~8a, ~8c	2 Inputs

~4L module	
Terminal assignment	**Output**
~1	2 Outputs
~2	2 Outputs
~3	2 Outputs
~4	2 Outputs
~5	2 Outputs
~6	2 Outputs
~7	2 Outputs
~8	Not Used

Figure 3-15: Contact input and output module wiring (Sheet 1 of 3)

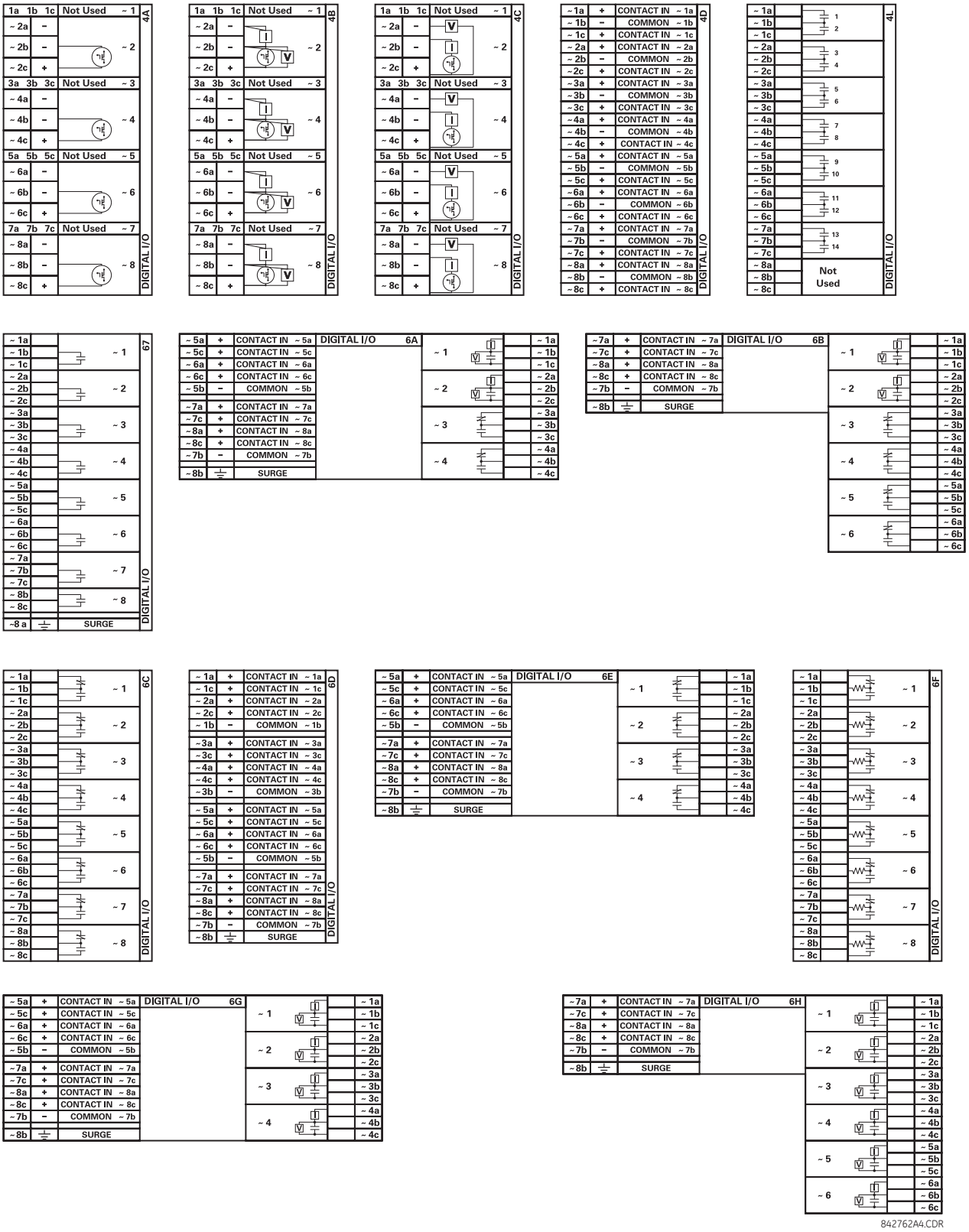

842762A4.CDR

Figure 3-16: Contact input and output module wiring (Sheet 2 of 3)

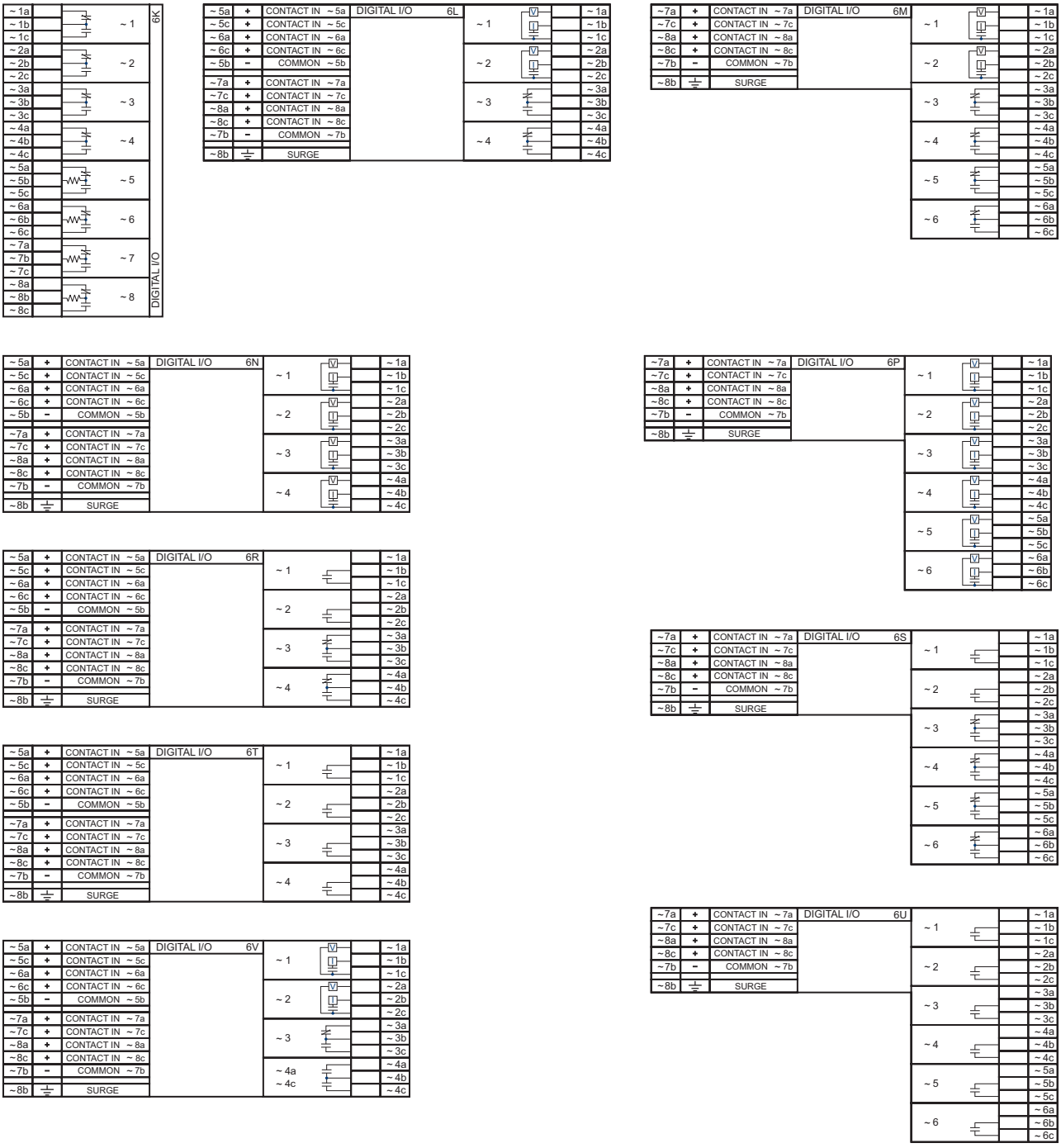

Figure 3-17: Contact input and output module wiring (Sheet 3 of 3)

DIGITAL I/O					6W
~ 1b	+	CONTACT IN ~ 1b	CONTACT IN ~ 1a	+	~ 1a
~ 2b	+	CONTACT IN ~ 2b	CONTACT IN ~ 2a	+	~ 2a
~ 3b	+	CONTACT IN ~ 3b	CONTACT IN ~ 3a	+	~ 3a
~ 4b	+	CONTACT IN ~ 4b	CONTACT IN ~ 4a	+	~ 4a
~ 5b	+	CONTACT IN ~ 5b	CONTACT IN ~ 5a	+	~ 5a
~ 6b	-	COMMON ~ 6b	COMMON ~ 6a	-	~ 6a
~7b	+	CONTACT IN ~ 7b	CONTACT IN ~ 7a	+	~7a
~8b	+	CONTACT IN ~ 8b	CONTACT IN ~ 8a	+	~8a
~9b	+	CONTACT IN ~ 9b	CONTACT IN ~ 9a	+	~9a
~10b	+	CONTACT IN ~10b	CONTACT IN ~ 10	+	~10a
~11b	+	CONTACT IN ~11b	CONTACT IN ~11a	+	~11a
~12b	-	COMMON ~ 12b	COMMON ~ 12a	-	~12a
~13b	+	CONTACT IN ~13b	CONTACT IN ~13a	+	~13a
~14b	+	CONTACT IN ~14b	CONTACT IN~ 14a	+	~14a
~15b	+	CONTACT IN ~15b	CONTACT IN ~ 15a	+	~15a
~16b	+	CONTACT IN ~16b	CONTACT IN ~ 16a	+	~16a
~17b	+	CONTACT IN ~17b	CONTACT IN ~17a	+	~17a
~18b	-	COMMON ~ 18b	COMMON ~ 18a	-	~18a

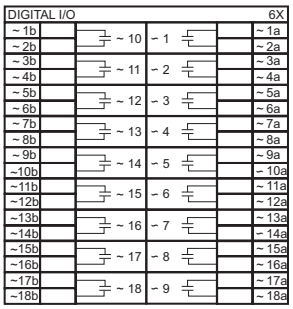

859759A2.CDR

NOTICE For proper functionality, observe the polarity shown in the figures for all contact input and output connections.

3.3.6.1 Contact inputs

A dry contact has one side connected to terminal B3b. This is the positive 48 V DC voltage rail supplied by the power supply module. The other side of the dry contact is connected to the required contact input terminal. Each contact input group has its own common (negative) terminal that must be connected to the DC negative terminal (B3a) of the power supply module. When a dry contact closes, a current of 1 to 3 mA flows through the associated circuit.

A wet contact has one side connected to the positive terminal of an external DC power supply. The other side of this contact is connected to the required contact input terminal. If a wet contact is used, then the negative side of the external source must be connected to the relay common (negative) terminal of each contact group. The maximum external source voltage for this arrangement is 300 V DC.

The voltage threshold at which each group of four contact inputs detects a closed contact input is programmable as 17 V DC for 24 V sources, 33 V DC for 48 V sources, 84 V DC for 110 to 125 V sources, and 166 V DC for 250 V sources.

Figure 3-18: Dry and wet contact input connections

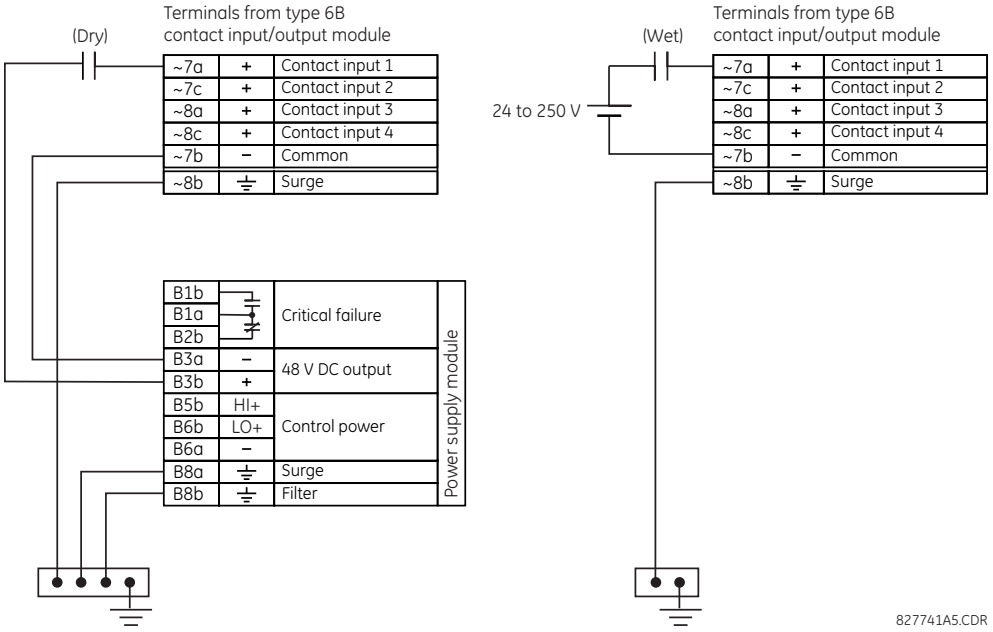

827741A5.CDR

NOTE Where a tilde "~" symbol appears, substitute the slot position of the module.

There is no provision in the relay to detect a DC ground fault on 48 V DC control power external output. We recommend using an external DC supply.

3.3.6.2 General application considerations

Contacts outputs of protective relays, auxiliary contacts from breakers, disconnectors and other devices are connected generally to contacts inputs of protective relays. In some situations, the contact outputs of some protective relays can have high impedance connected across it. When such a contact output is connected across a N60 contact input, it can spuriously operate the N60 input even when the output is open, if there is a substantial distributed capacitance (represented by C1) present in the wiring between the output and the N60 input, and the debounce time setting in the N60 relay is low enough. This false assertion of the contact input, when there is inadvertent ground present at the DC positive terminal, can be prevented by inserting a resistor across the N60 input.

The following figure shows a typical DC circuit, with battery ground detection, of contact input. The contact output has parallel impedance across it (represented by R1).

Figure 3-19: Typical contact input DC circuit

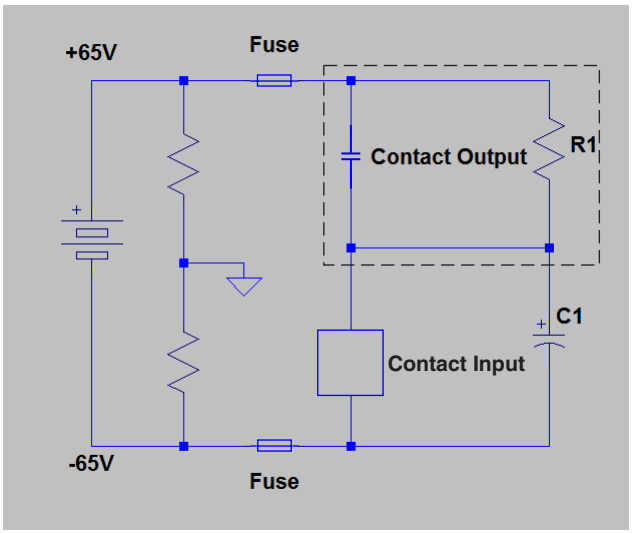

The presence of the impedance path (R1) across the contact output allows the stray (distributed) capacitance C1 to charge as shown, thus developing a voltage across the contact input enough to momentarily operate the input while the capacitance discharges in the presence of DC ground on the positive terminal of the battery.

The duration of the discharge depends on the value of the distributed capacitance, the initial voltage of the distributed capacitance, and the input impedance of the contact input. If the duration is greater than the debounce time setting, then the contact input operates.

The application example that follows describes how to mitigate this issue by connecting a resistor across the contact input, as shown in the next figure, or by adjusting the debounce time setting to a value greater than the discharge time to prevent spurious operation of the contact input only if the voltage (with output open) across the contact input due to trickle current is less than the threshold voltage. This operation of contact inputs also can be prevented by using the Auto-Burnish contact inputs or contact inputs with active impedance.

Figure 3-20: Contact input connected to a contact output with resistor (R2) across the input

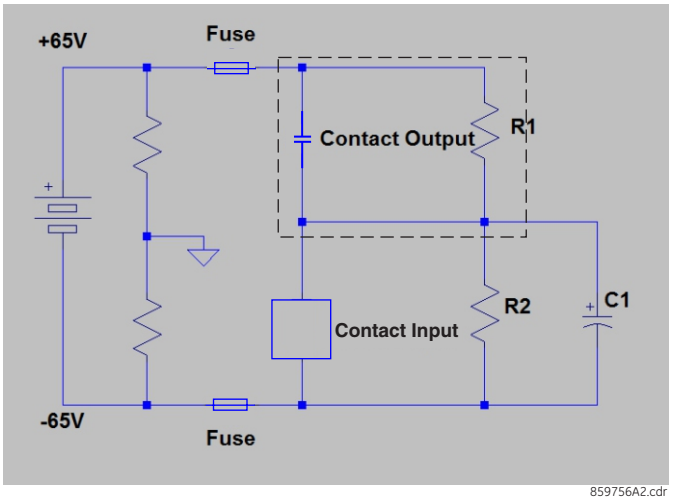

Application example

This example is for illustrative purposes only and the calculations present the worst-case scenario. In practice, the value of debounce time can be lower.

Contact input ON state impedance used in the calculation of the discharge period is based on the following table.

Table 3-4: Discharge period

Battery voltage (V)	Input impedance (kΩ)
130	50
250	97

Debounce time setting = 2 ms

Assume a stray capacitance of 0.1 μF.

Assume an initial voltage across the stray capacitance "Vinitial" = 19 V (Vthreshold - 65 V), where Vthreshold = 84 V. The initial voltage Vinitial depends on values of impedance of R1 and contact inputs when the contact input is OFF (non-activated state).

Therefore, discharge time constant (τ) =50 kΩ *0.1 μF = 5 ms.

Discharge period t is calculated from the following equation:

$$Vthreshold = (Vbatt - VInitial) * e^{(-t/\tau)}$$

$$84 = -149 * e^{(t/0.005)} \qquad \textbf{Eq. 3-1}$$

$$T = -0.005 * \ln(84/149) = 0.0029 \text{ s}$$

Therefore, in this example the contact inputs operate.

To prevent this operation, the debounce time must be increased to 4 ms (set debounce time as per the following table) or insert a resistor less than or equal to "R" as calculated later.

Table 3-5: Typical debounce time setting

Stray capacitance (μF)	Battery voltage (V)	Debounce time (ms)
0.05	130	2
0.1	130	4
0.2	130	6
0.05	250	3
0.1	250	6 *

Stray capacitance (μF)	Battery voltage (V)	Debounce time (ms)
0.2	250	11

* Default debounce time on contact inputs is 6 ms.

The value of this resistor "R" is calculated as follows:

1. Determine the minimum voltage (V threshold) required to turn on the input. This is determined by direct measurement or referenced in the input specifications.
2. Calculate the resistance necessary to limit the voltage to 1/3 V threshold (when the contact is OFF, the non-activated state) as follows:

$$R = (V_{threshold} / 3) / (2\ mA) \quad \textbf{Eq. 3-2}$$

   The 2 mA current is used in case the contact input is connected across the GE Form A contact output with voltage monitoring. Otherwise use the amperage of the active circuit connected to the contact input when its contact output is open and the voltage across the contact input is third trigger threshold to calculate the resistor value.
3. When the contact is ON (operate state), the battery voltage appears across the resistor. The wattage rating of the resistor is then:

$$PR = 1.3 * (V_{batt})^2 / R\ Watts \quad \textbf{Eq. 3-3}$$

4. Applying the following equation to our example:

$$R = 84\ V / 3 * (1 / 2\ mA) = 14\ k\Omega$$

$$PR = 1.57\ Watts \quad \textbf{Eq. 3-4}$$

5. Calculating the voltage across the contact input with the Burden Resistor, Voltage across the contact Input:

$$V_{resistor} = 2\ mA * 14\ Kohm = 28\ V$$

$$V_{resistor} < \text{contact input threshold (84 V)} \quad \textbf{Eq. 3-5}$$

In conclusion, in this example, the contact input does NOT operate falsely with the Burden Resistor across its input AND when a battery ground is present.

3.3.6.3 Use of contact inputs with auto-burnishing

The contact inputs sense a change of state of the external device contact based on the measured current. When external devices are located in a harsh industrial environment (either outdoor or indoor), their contacts can be exposed to various types of contamination. Normally, there is a thin film of insulating sulfidation, oxidation, or contaminates on the surface of the contacts, sometimes making it difficult or impossible to detect a change of state. This film must be removed to establish circuit continuity — an impulse of higher than normal current can accomplish this.

The contact inputs with auto-burnish create a high current impulse when the threshold is reached to burn off this oxidation layer as a maintenance to the contacts. Afterwards the contact input current is reduced to a steady-state current. The impulse has a five-second delay after a contact input changes state.

Figure 3-21: Current through contact inputs with auto-burnishing

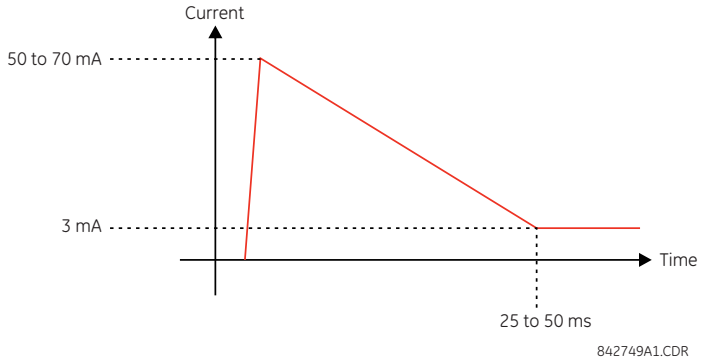

Regular contact inputs limit current to less than 3 mA to reduce station battery burden. In contrast, contact inputs with auto-burnishing allow currents up to 50 to 70 mA at the first instance when the change of state is sensed. Then, within 25 to 50 ms, this current is slowly reduced to 3 mA as indicated. The 50 to 70 mA peak current burns any film on the contacts, allowing for proper sensing of state changes. If the external device contact is bouncing, the auto-burnishing starts when external device contact bouncing is over.

Another important difference between the auto-burnishing input module and the regular input modules is that only two contact inputs have common ground, as opposed to four contact inputs sharing one common ground (see the Contact Input and Output Module Wiring diagrams). This is beneficial when connecting contact inputs to separate voltage sources. Consequently, the threshold voltage setting is also defined per group of two contact inputs.

The auto-burnish feature can be disabled or enabled using the DIP switches found on each daughter card. There is a DIP switch for each contact, for a total of 16 inputs.

Figure 3-22: Auto-burnish DIP switches

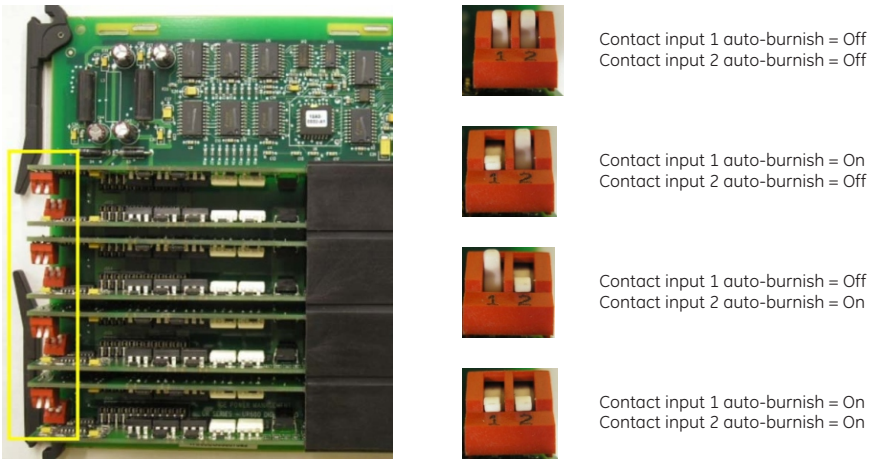

The auto-burnish circuitry has an internal fuse for safety purposes. During regular maintenance, check the auto-burnish functionality using an oscilloscope.

3.3.6.4 Use of contact inputs with active impedance

Contact inputs can be susceptible to parasitic capacitance, caused by long cable runs affected by switching surges from external circuits. This can result in inadvertent activation of contact inputs with the external contact open. In this case, GE recommends using the contact I/O module with active impedance circuit.

Active impedance contact input can tolerate external cable capacitance of up to 0.2 µF, without entering the ON state for more than 2 ms. The contact input debounce time can still be set above 2 ms for added security to prevent contact input activations caused by external transient ON states.

An active impedance contact input is normally in Low impedance mode during OFF contact state (non-activated condition). During Low impedance state, contact input impedance is maintained at 10 K Ohms impedance to allow fast discharge of the stray capacitance of the long cables.

When the contact input voltage exceeds the set threshold, active impedance maintains 10 K Ohms impedance. If voltage starts rapidly decreasing, this indicates that stray capacitance is being discharged through the contact input. If, however, voltage stabilizes above the set threshold, the input impedance is switched to High impedance mode of 100 K Ohms. This value reduces the input current to <3 mA, and contact input switches to the ON state (operated state).

The figure shows the active impedance contact input V-I characteristic. Different thresholds with their corresponding characteristics are shown by color. The contact input is in the ON (operated) state if the input voltage is to the right of the colored threshold band (+/-10% tolerance), and the contact input is in the OFF (non-activated) state when input voltage is to the left of the band. A contact input is in LOW state during non-operated system condition, and actively switches to HIGH state upon detection of input voltage above the settable threshold.

3

Figure 3-23: Active impedance contact input V-I characteristic

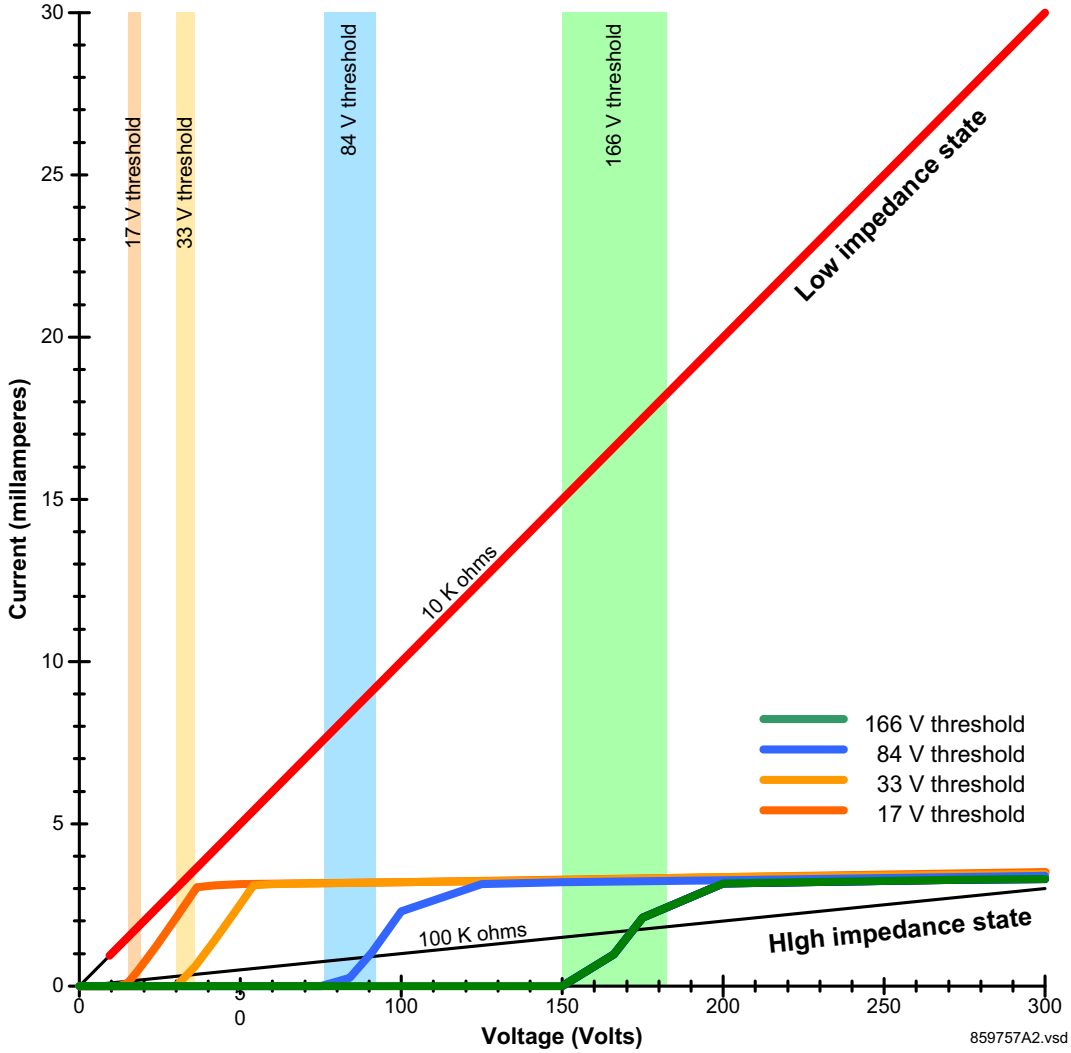

3.3.7 Transducer inputs and outputs

Transducer input modules receive input signals from external DCmA output transducers (DCmA In) or resistance temperature detectors (RTDs). Hardware and software are provided to receive signals from these external transducers and convert these signals into a digital format for use as required.

Transducer output modules provide DC current outputs in several standard DCmA ranges. Software is provided to configure virtually any analog quantity used in the relay to drive the analog outputs.

Each transducer input/output module has 24 terminal connections. These connections are arranged as three terminals per row over eight rows. A given row can be used for either inputs or outputs, with terminals in column "a" having positive polarity and terminals in column "c" having negative polarity. Since an entire row is used for a single input/output channel, the name of the channel is assigned using the module slot position and row number.

Each module also requires that a connection from an external ground bus be made to terminal 8b. The current outputs require a twisted-pair shielded cable, where the shield is grounded at one end only. The following figure illustrates the transducer module types (5A, 5C, 5D, 5E, and 5F) and channel arrangements that can be ordered for the relay.

NOTE

Where a tilde "~" symbol appears, substitute the slot position of the module.

Figure 3-24: Transducer input/output module wiring

~1a	+	dcmA In ~1	5A
~1c	–		
~2a	+	dcmA In ~2	
~2c	–		
~3a	+	dcmA In ~3	
~3c	–		
~4a	+	dcmA In ~4	
~4c	–		
~5a	+	dcmA Out ~5	
~5c	–		
~6a	+	dcmA Out ~6	
~6c	–		
~7a	+	dcmA Out ~7	
~7c	–		
~8a	+	dcmA Out ~8	
~8c	–		
~8b	⏚	SURGE	ANALOG I/O

~1a	Hot	RTD ~1	5C
~1c	Comp		
~1b	Return	for RTD ~1& ~2	
~2a	Hot	RTD ~2	
~2c	Comp		
~3a	Hot	RTD ~3	
~3c	Comp		
~3b	Return	for RTD ~3& ~4	
~4a	Hot	RTD ~4	
~4c	Comp		
~5a	Hot	RTD ~5	
~5c	Comp		
~5b	Return	for RTD ~5& ~6	
~6a	Hot	RTD ~6	
~6c	Comp		
~7a	Hot	RTD ~7	
~7c	Comp		
~7b	Return	for RTD ~7& ~8	
~8a	Hot	RTD ~8	
~8c	Comp		
~8b	⏚	SURGE	ANALOG I/O

~1a	Hot	RTD ~1	5D
~1c	Comp		
~1b	Return	for RTD ~1& ~2	
~2a	Hot	RTD ~2	
~2c	Comp		
~3a	Hot	RTD ~3	
~3c	Comp		
~3b	Return	for RTD ~3& ~4	
~4a	Hot	RTD ~4	
~4c	Comp		
~5a	+	dcmA Out ~5	
~5c	–		
~6a	+	dcmA Out ~6	
~6c	–		
~7a	+	dcmA Out ~7	
~7c	–		
~8a	+	dcmA Out ~8	
~8c	–		
~8b	⏚	SURGE	ANALOG I/O

~1a	+	dcmA In ~1	5E
~1c	–		
~2a	+	dcmA In ~2	
~2c	–		
~3a	+	dcmA In ~3	
~3c	–		
~4a	+	dcmA In ~4	
~4c	–		
~5a	Hot	RTD ~5	
~5c	Comp		
~5b	Return	for RTD ~5& ~6	
~6a	Hot	RTD ~6	
~6c	Comp		
~7a	Hot	RTD ~7	
~7c	Comp		
~7b	Return	for RTD ~7& ~8	
~8a	Hot	RTD ~8	
~8c	Comp		
~8b	⏚	SURGE	ANALOG I/O

~1a	+	dcmA In ~1	5F
~1c	–		
~2a	+	dcmA In ~2	
~2c	–		
~3a	+	dcmA In ~3	
~3c	–		
~4a	+	dcmA In ~4	
~4c	–		
~5a	+	dcmA In ~5	
~5c	–		
~6a	+	dcmA In ~6	
~6c	–		
~7a	+	dcmA In ~7	
~7c	–		
~8a	+	dcmA In ~8	
~8c	–		
~8b	⏚	SURGE	ANALOG I/O

842764A1.CDR

The following figure show how to connect RTDs.

Figure 3-25: RTD connections

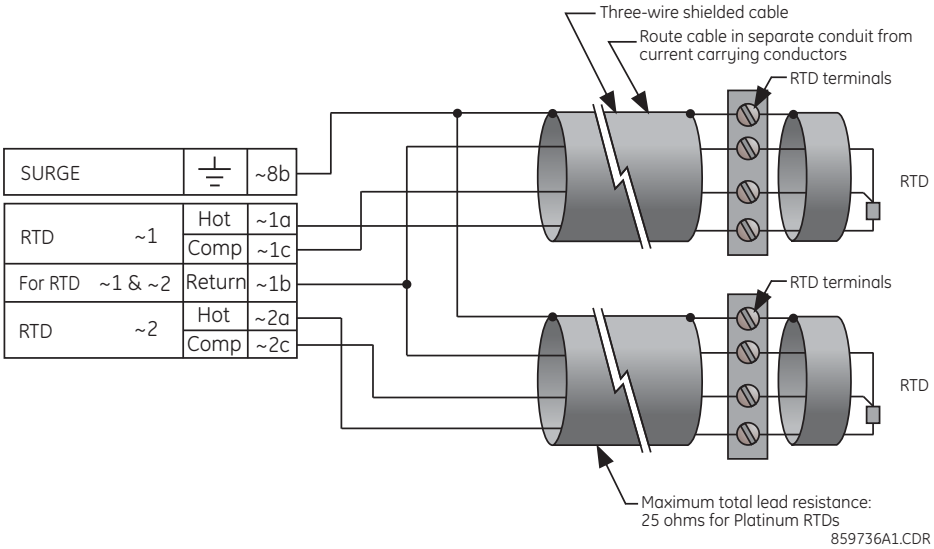

3.3.8 RS232 port

On the enhanced and basic front panels is a nine-pin RS232C serial port for programming with a computer. All that is required to use this interface is a computer running the EnerVista UR Setup software provided with the relay. Cabling for the RS232 port is shown in the following figure for the nine-pin connector on the UR and nine or 25-pin connector on a computer.

The baud rate for this port can be set, with a default of 115200 bps.

Figure 3-26: RS232 front panel port connection

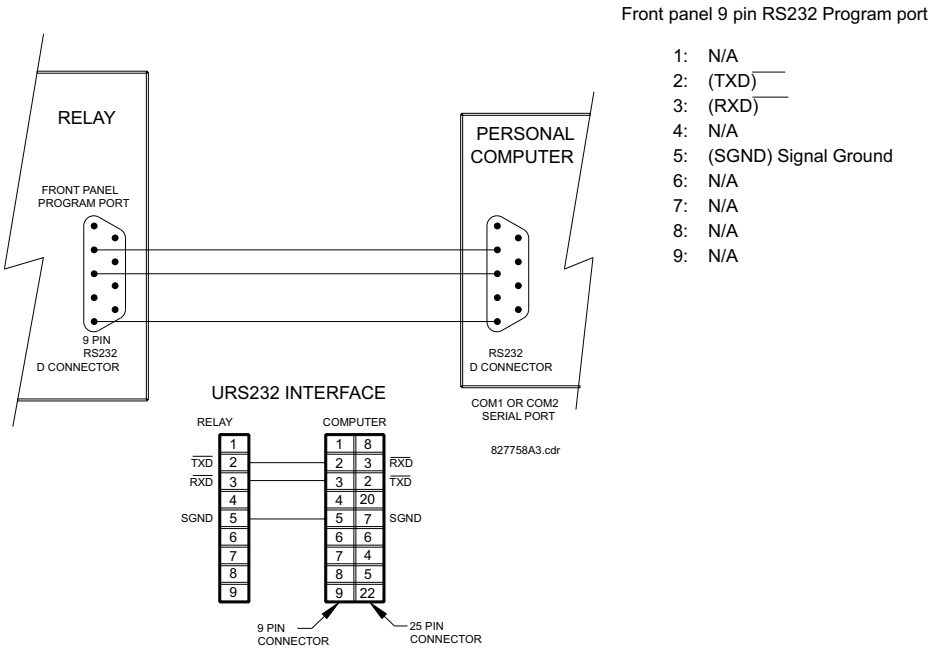

3.3.9 CPU communication ports

3.3.9.1 Overview

There is a rear RS485 communication port on the CPU module.

The CPU module does not require a surge ground connection.

For Sampled Value (SV) applications using a Process Bus Module with order code 85, 86, or 87 with IRIG-B for synchronization, follow the recommended cables and grounding connections. If using a Process Bus Module and IRIG-B as the synchronizing source, GE recommends moving the grounding from the IRIG-B generator to UR terminal D4a in order to better protect the IRIG-B input from long bursts of transient noise.

3

Figure 3-27: CPU module wiring when using a Process Bus Module

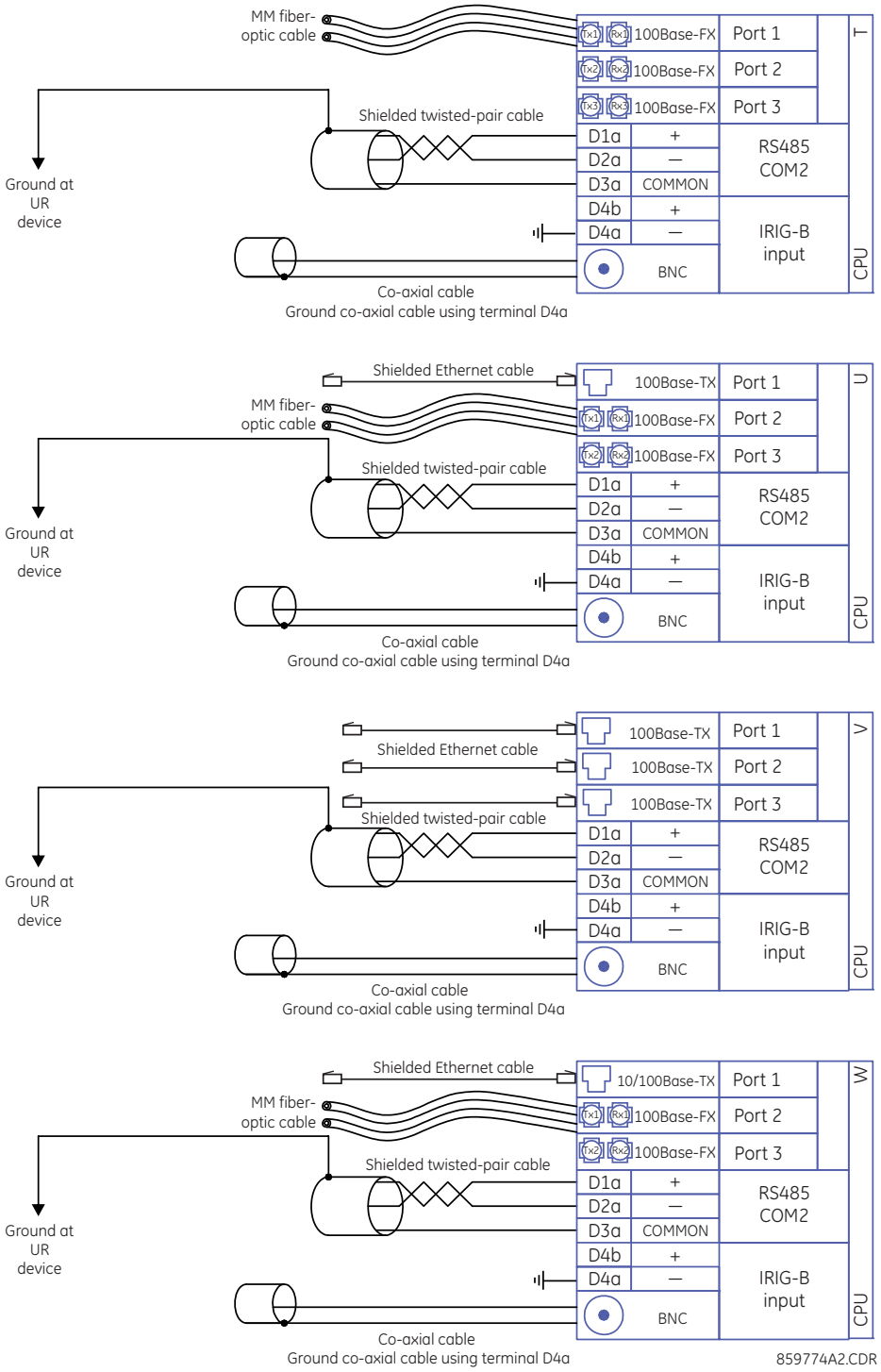

If not using a Process Bus Module (order code 85, 86, 87), the following IRIG-B cable and ground connection is appropriate.

Figure 3-28: CPU module wiring for IRIG-B without Process Bus Module

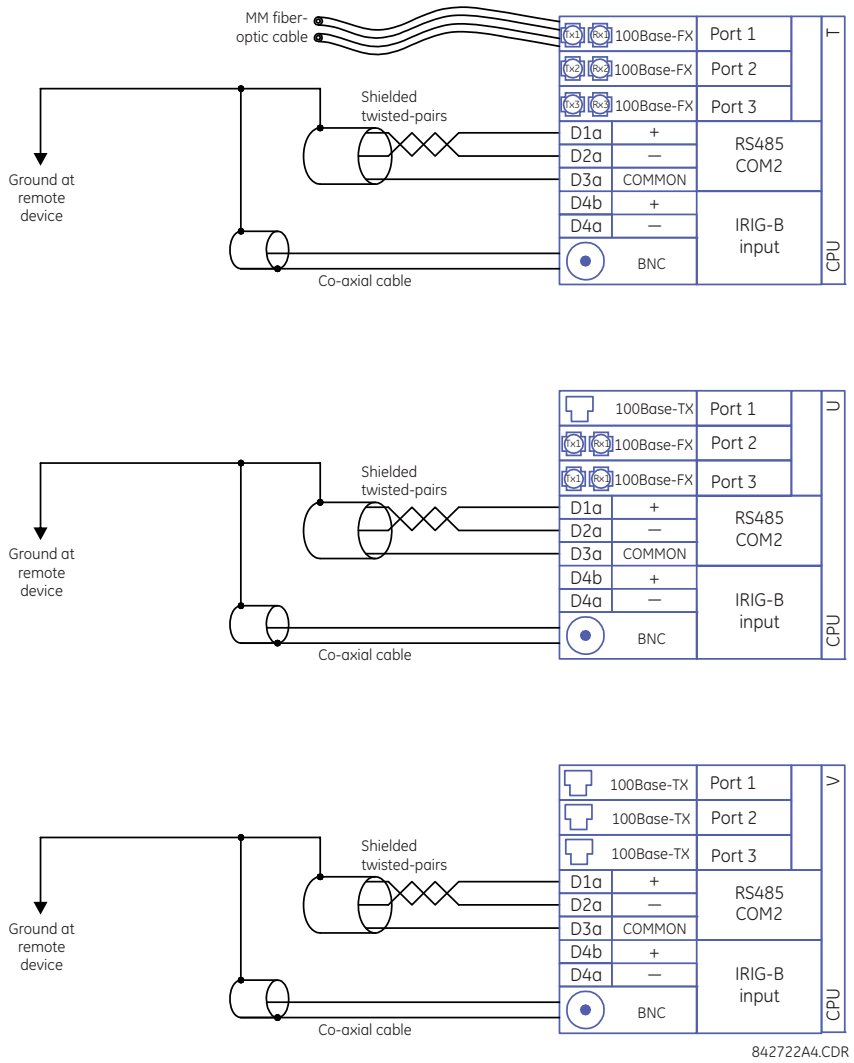

3.3.9.2 RS485 port

RS485 data transmission and reception are accomplished over a single twisted-pair wire with transmit and receive data alternating over the same two wires. Through the use of the port, continuous monitoring and control from a remote computer, SCADA system, or Power Line Carrier (PLC) is possible.

To minimize errors from noise, the use of shielded twisted-pair wire is recommended. Correct polarity must be observed. For instance, the relays must be connected with all RS485 "+" terminals connected together, and all RS485 "–" terminals connected together. Though data is transmitted over a two-wire twisted pair, all RS485 devices require a shared reference, or common voltage. This common voltage is implied to be a power supply common. Some systems allow the shield (drain wire) to be used as common wire and to connect directly to the N60 COM terminal (#3); others function correctly only if the common wire is connected to the N60 COM terminal, but insulated from the shield.

To avoid loop currents, ground the shield at only one point. If other system considerations require the shield to be grounded at more than one point, install resistors (typically 100 ohms) between the shield and ground at each grounding point. Each relay needs to be daisy-chained to the next one in the link. A maximum of 32 relays can be connected in this manner without exceeding driver capability. For larger systems, additional serial channels must be added. It is also possible to use commercially available repeaters to have more than 32 relays on a single channel. Avoid star or stub connections entirely.

Lightning strikes and ground surge currents can cause large momentary voltage differences between remote ends of the communication link. For this reason, surge protection devices are provided internally at both communication ports. An isolated power supply with an optocoupled data interface also acts to reduce noise coupling. To ensure maximum reliability, ensure that all equipment has similar transient protection devices installed.

Terminate both ends of the RS485 circuit with an impedance as shown in the figure.

Figure 3-29: RS485 serial connection

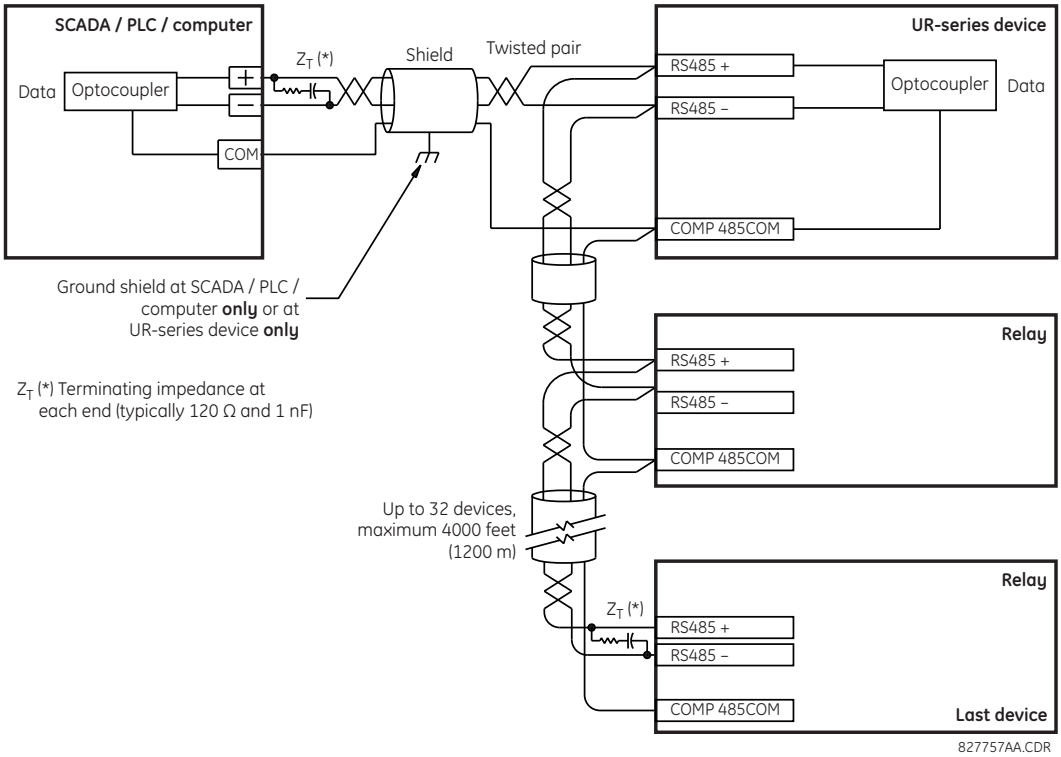

3.3.9.3 100Base-FX fiber optic ports

The fiber-optic communication ports allow for fast and efficient communications between relays at 100 Mbps. Optical fiber can be connected to the relay supporting a wavelength of 1310 nm in multimode.

Ensure that the dust covers are installed when the fiber is not in use. Dirty or scratched connectors can lead to high losses on a fiber link.

3.3.10 IRIG-B

There is a round IRIG-B connector at the back of the CPU module, marked "IN." Use is optional.

IRIG-B is a standard time code format that allows stamping of events to be synchronized among connected devices. The IRIG-B code allows time accuracies of up to 100 ns. The GE MultiSync 100 1588 GPS Clock as well as third-party equipment are available for generating the IRIG-B signal. This equipment can use a global positioning system (GPS) satellite system to obtain the time reference so that devices at different geographic locations can be synchronized. The IRIG time code formats are serial, pulse width-modulated codes that can be either DC level shifted or amplitude modulated (AM). Using IRIG-B input, the N60 operates an internal oscillator with 1 μs resolution and accuracy.

Figure 3-30: Options for IRIG-B connection

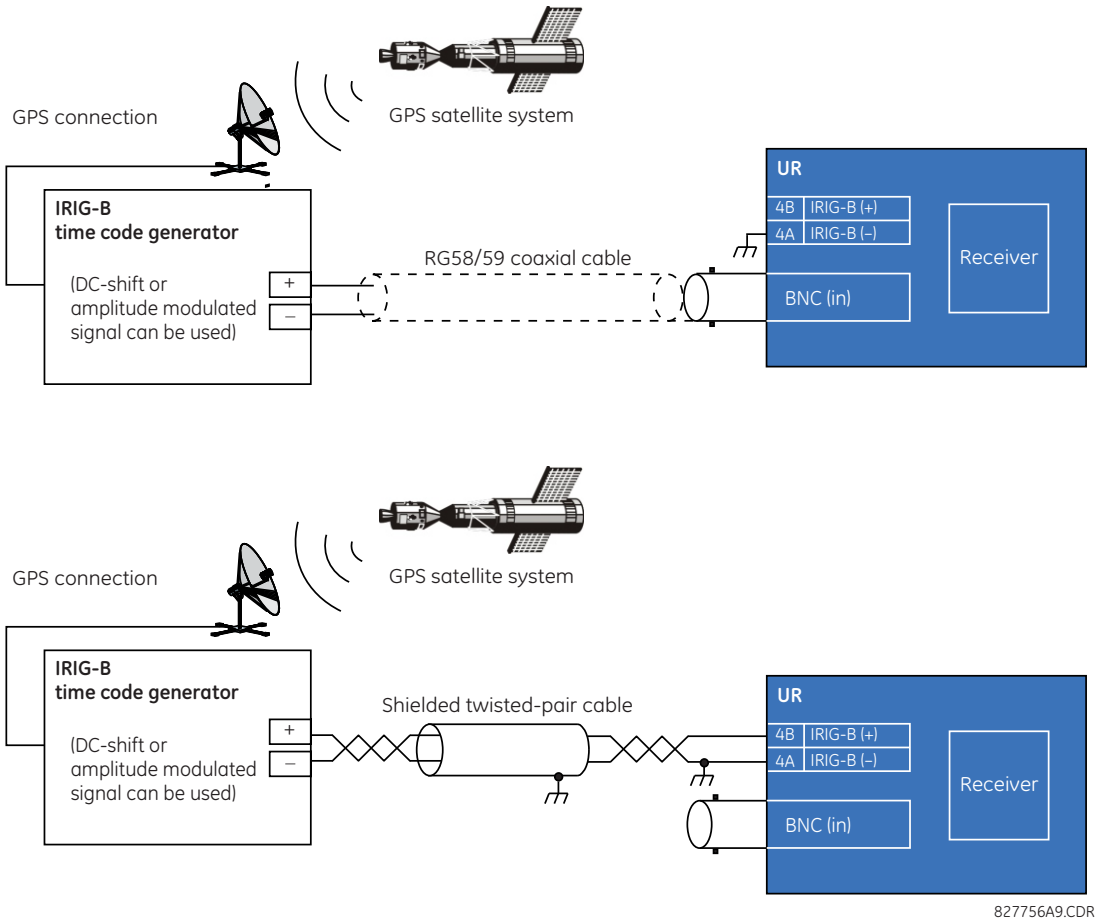

NOTE

Using an amplitude-modulated receiver causes errors up to 1 ms in event time stamping.

NOTE

When IRIG-B is used as the time synchronization source for synchrophasors, the DC level shifted option must be used in order to achieve the 1% Total Vector Error specified by the standard. If amplitude modulated IRIG-B is used, it results in a 20 to 25 degree error in the synchrophasor angle measurement. The IEEE 1588 Precision Time Protocol can also be used to achieve accurate time synchronization for synchrophasor calculation.

3.4 Direct input and output communications

3.4.1 Description

The direct inputs and outputs feature makes use of the type 7 series of communications modules and allows direct messaging between UR devices. The communications modules are outlined in the table later in this section.

The communications channels are normally connected in a ring configuration, as shown in the following figure. The transmitter of one module is connected to the receiver of the next module. The transmitter of this second module is then connected to the receiver of the next module in the ring. This is continued to form a communications ring. The figure illustrates a ring of four UR-series relays with the following connections: UR1-Tx to UR2-Rx, UR2-Tx to UR3-Rx, UR3-Tx to UR4-Rx, and UR4-Tx to UR1-Rx. A maximum of 16 URs can be connected in a single ring.

3

Figure 3-31: Direct input and output single-channel connection

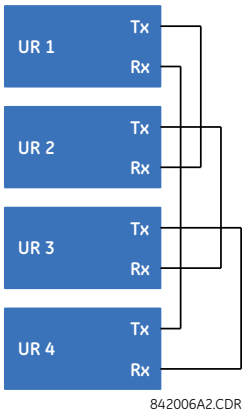

Inter-relay communication (IRC) modules with protocol C37.94 and G.703 are designed for back-to-back communication connections, so the ring configuration shown in the previous figure does not apply. To establish inter-relay communication in more than two URs, you need to have a two-channel IRC module and enable the **DIRECT I/O CHANNEL CROSSOVER** setting in all relays, as shown in the next figure. This configuration can be expanded to 16 URs, and this configuration does not provide a redundancy ring since both channels are made into a single ring by the channel crossover function. As per the figure entitled Typical Pin Interconnection between Two G.703 Interfaces later in this chapter, the clock is supplied typically by multiplexer (MUX) and all URs are in Loop Timing Mode. If there is no MUX, then UR1 and UR3 can be in Internal Timing Mode and UR2 and UR4 can be in Loop Timing Mode. That is, connected channels must have opposite timing modes.

Figure 3-32: Ring configuration for C37.94 module (concept also applies to G.703)

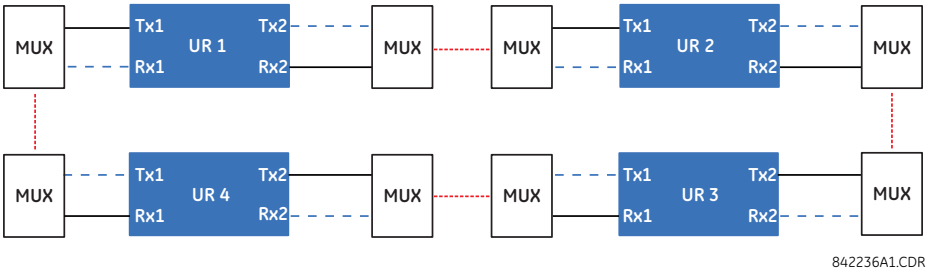

The interconnection for dual-channel type 7 communications modules is shown as follows. Two-channel modules allow for a redundant ring configuration. That is, two rings can be created to provide an additional independent data path. The required connections are: UR1-Tx1 to UR2-Rx1, UR2-Tx1 to UR3-Rx1, UR3-Tx1 to UR4-Rx1, and UR4-Tx1 to UR1-Rx1 for the first ring; and UR1-Tx2 to UR4-Rx2, UR4-Tx2 to UR3-Rx2, UR3-Tx2 to UR2-Rx2, and UR2-Tx2 to UR1-Rx2 for the second ring.

Figure 3-33: Direct input and output dual-channel connection

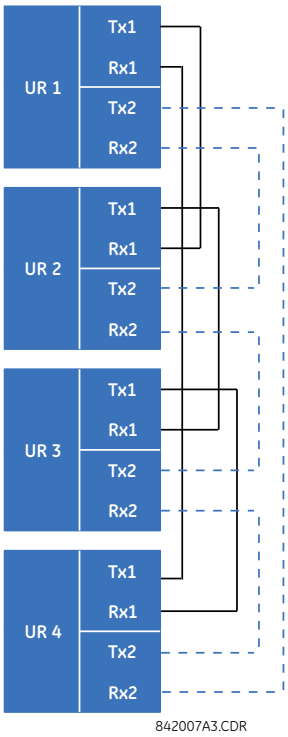

The following figure shows the connection for three UR-series relays using two independent communication channels. UR1 and UR3 have single type 7 communication modules; UR2 has a dual-channel module. The two communication channels can be of different types, depending on the type 7 modules used. To allow the direct input and output data to cross-over from channel 1 to channel 2 on UR2, set the **DIRECT I/O CHANNEL CROSSOVER** setting to "Enabled" on UR2. This forces UR2 to forward messages received on Rx1 out Tx2, and messages received on Rx2 out Tx1.

Figure 3-34: Direct input and output single/dual channel combination connection

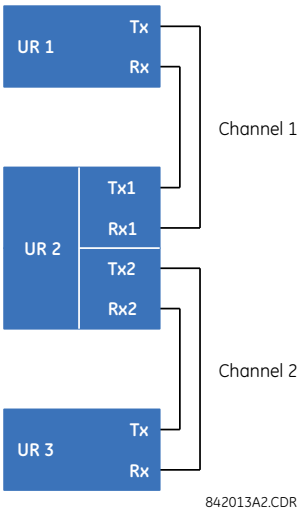

The inter-relay communications modules are available with several interfaces and some are outlined here in more detail. Those that apply depend on options purchased. The options are outlined in the Inter-Relay Communications section of the Order Code tables in Chapter 2. All of the fiber modules use ST type connectors.

3

3.4.2 Fiber: LED and ELED transmitters

The following figure shows the configuration for the 7A, 7B, 7C, 7H, 7I, and 7J fiber-only modules.

Figure 3-35: LED and ELED fiber modules

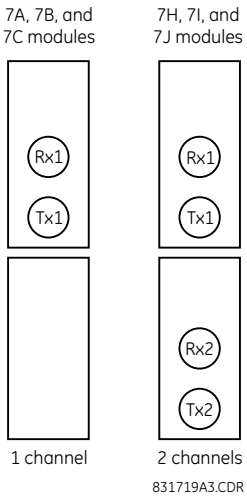

3.4.3 Fiber laser transmitters

The following figure shows the configuration for the 72, 73, 7D, and 7K fiber-laser modules.

Figure 3-36: 7x Laser fiber modules

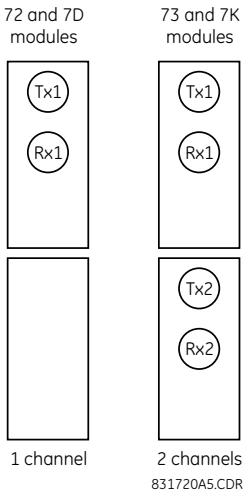

The following figure shows configuration for the 2I and 2J fiber-laser modules.

Figure 3-37: 2I and 2J laser fiber modules

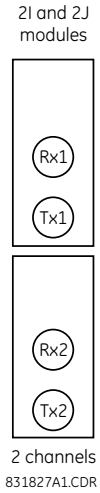

CAUTION **Observing any fiber transmitter output can injure the eye.**

NOTICE When using a laser Interface, attenuators can be necessary to ensure that you do not exceed the maximum optical input power to the receiver.

3.4.4 G.703 interface

3.4.4.1 Description

G.703 is an International Telecommunications Union (ITU) standard for the transmission of data and voice signals. Modules 7R (one channel) and 7S (two channels) apply.

The following figure shows the 64K ITU G.703 co-directional interface configuration. This is module 7S.

The G.703 module is fixed at 64 kbps. The **SETTINGS ⇨ PRODUCT SETUP ⇨⇩ DIRECT I/O ⇨ DIRECT I/O DATA RATE** setting is not applicable to this module.

AWG 24 twisted shielded pair wiring is recommended for external connections, with the shield grounded only at one end. Connecting the shield to pin X1a or X6a grounds the shield since these pins are connected internally to ground. Thus, if pin X1a or X6a is used to ground the shield at one end, do not ground the shield at the other end. This interface module is protected by surge suppression devices.

Figure 3-38: G.703 interface configuration

7S	G.703 channel 1	Shield	~1a
		Tx –	~1b
		Rx –	~2a
		Tx +	~2b
		Rx +	~3a
	Surge	⏚	~3b
	G.703 channel 2	Shield	~6a
		Tx –	~6b
		Rx –	~7a
		Tx +	~7b
		Rx +	~8a
	Surge	⏚	~8b

G.703 communications

842773A3.CDR

The following figure shows the typical pin interconnection between two G.703 interfaces. For the actual physical arrangement of these pins, see the Rear Terminal Layout section earlier in this chapter. All pin interconnections are to be maintained for a connection to a multiplexer.

Figure 3-39: Typical pin interconnection between two G.703 interfaces

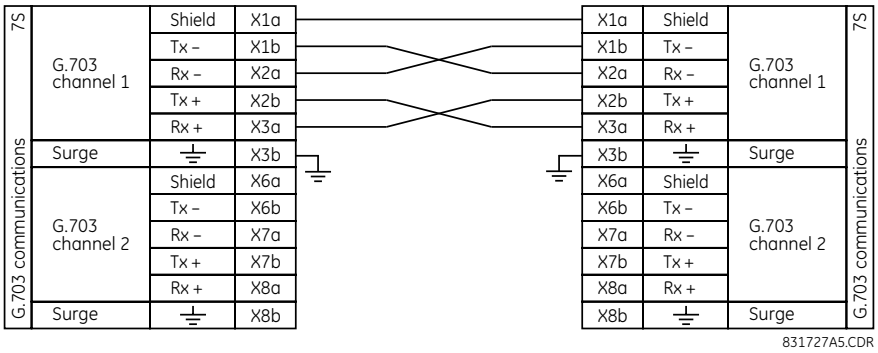

NOTE

Pin nomenclature differs from one manufacturer to another. It is not uncommon to see pinouts numbered TxA, TxB, RxA, and RxB. In such cases, assume that "A" is equivalent to "+" and "B" is equivalent to "–."

3.4.4.2 G.703 selection switch procedures

1. With the power to the relay off, remove the G.703 module (7R or 7S) as follows. Record the original location of the module to help ensure that the same or replacement module is inserted into the correct slot.
2. Simultaneously pull the ejector/inserter clips located at the top and at the bottom of each module in order to release the module for removal. (For more information on accessing modules, see the Maintenance chapter.)
3. Remove the module cover screw.
4. Remove the top cover by sliding it towards the rear and then lift it upwards.
5. Set the timing selection switches (channels 1 and 2) to the required timing modes.
6. Replace the top cover and the cover screw.
7. Re-insert the G.703 module. Take care to ensure that the correct module type is inserted into the correct slot position. The ejector/inserter clips located at the top and bottom of each module must be in the disengaged position as the module is inserted smoothly into the slot. Once the clips have cleared the raised edge of the chassis, engage the clips simultaneously. When the clips have locked into position, the module is inserted fully.

Figure 3-40: G.703 timing selection switch setting

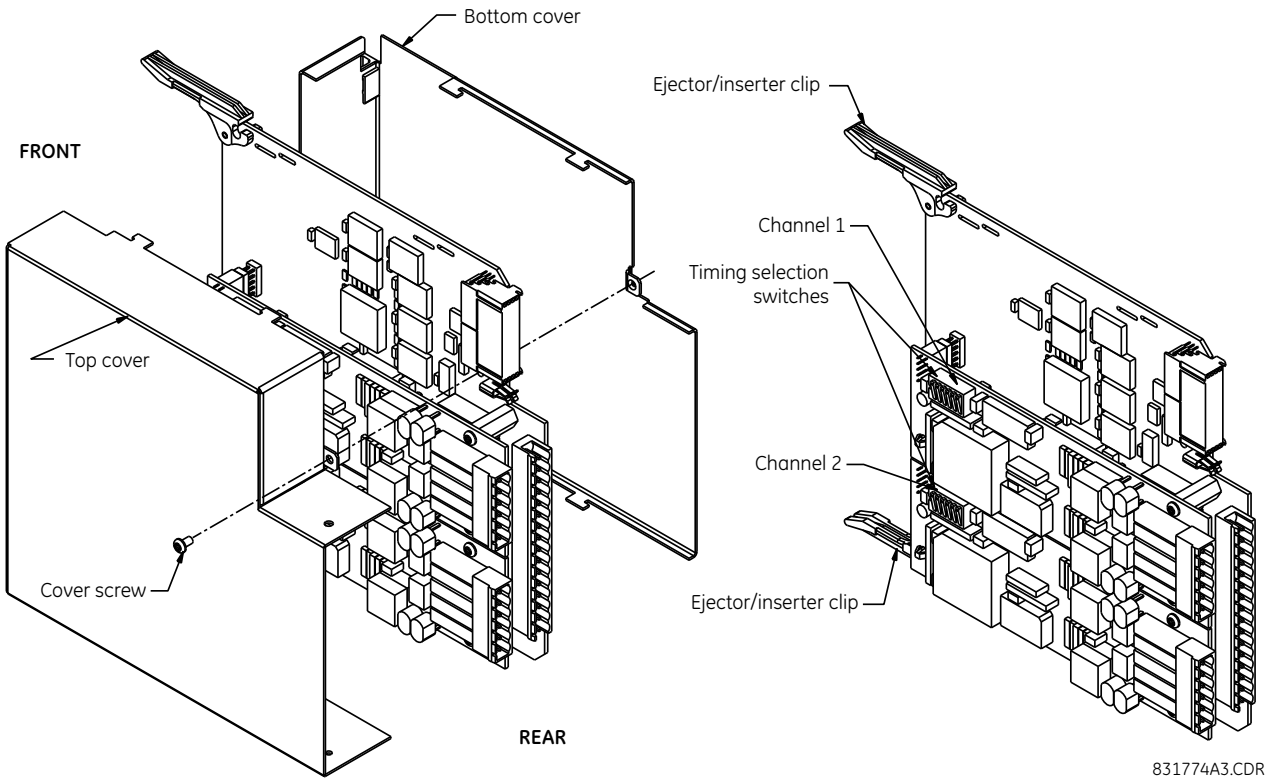

Table 3-6: G.703 timing selections

Switches	Function
S1	OFF → octet timing disabled ON → octet timing 8 kHz
S5 and S6	S5 = OFF and S6 = OFF → loop timing mode S5 = ON and S6 = OFF → internal timing mode S5 = OFF and S6 = ON → minimum remote loopback mode S5 = ON and S6 = ON → dual loopback mode

3.4.4.3 G.703 octet timing

If octet timing is enabled (ON), this 8 kHz signal is asserted during the violation of bit 8 (LSB) necessary for connecting to higher order systems. When N60s are connected back-to-back, octet timing is disabled (OFF).

3.4.4.4 G.703 timing modes

There are two timing modes for the G.703 module: internal timing mode and loop timing mode (default).

- **Internal Timing Mode** — The system clock is generated internally. Therefore, set the G.703 timing selection to internal timing mode for back-to-back (UR-to-UR) connections. For back-to-back connections, set octet timing (S1 = OFF) and timing mode to internal timing (S5 = ON and S6 = OFF).
- **Loop Timing Mode** — The system clock is derived from the received line signal. Therefore, set the G.703 timing selection to loop timing mode for connections to higher order systems. For connection to a higher order system (UR-to-multiplexer, factory defaults), set to octet timing (S1 = ON) and set timing mode to loop timing (S5 = OFF and S6 = OFF).

The switch settings for the internal and loop timing modes are shown.

Figure 3-41: Switches

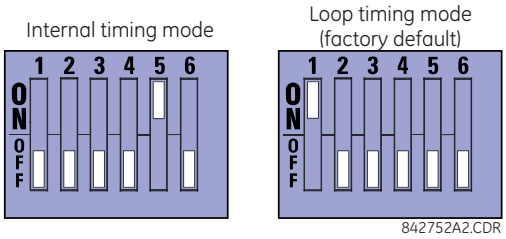

3.4.4.5 G.703 test modes

In *minimum remote loopback mode*, the multiplexer is enabled to return the data from the external interface without any processing to assist in diagnosing G.703 line-side problems irrespective of clock rate. Data enters from the G.703 inputs, passes through the data stabilization latch that also restores the proper signal polarity, passes through the multiplexer, and then returns to the transmitter. The differential received data is processed and passed to the G.703 transmitter module after which point the data is discarded. The G.703 receiver module is fully functional and continues to process data and passes it to the differential Manchester transmitter module. Since timing is returned as it is received, the timing source is expected to be from the G.703 line side of the interface.

Figure 3-42: G.703 minimum remote loopback mode

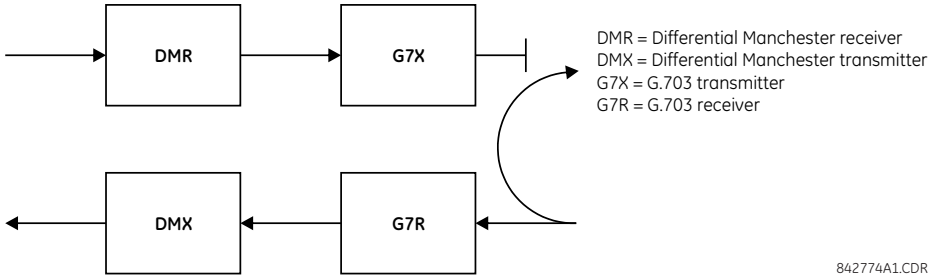

In *dual loopback mode*, the multiplexers are active and the functions of the circuit are divided into two with each receiver/transmitter pair linked together to deconstruct and then reconstruct their respective signals. Differential Manchester data enters the Differential Manchester receiver module and then is returned to the differential Manchester transmitter module. Likewise, G.703 data enters the G.703 receiver module and is passed through to the G.703 transmitter module to be returned as G.703 data. Because of the complete split in the communications path and because, in each case, the clocks are extracted and reconstructed with the outgoing data, in this mode there must be two independent sources of timing. One source lies on the G.703 line side of the interface while the other lies on the differential Manchester side of the interface.

Figure 3-43: G.703 dual loopback mode

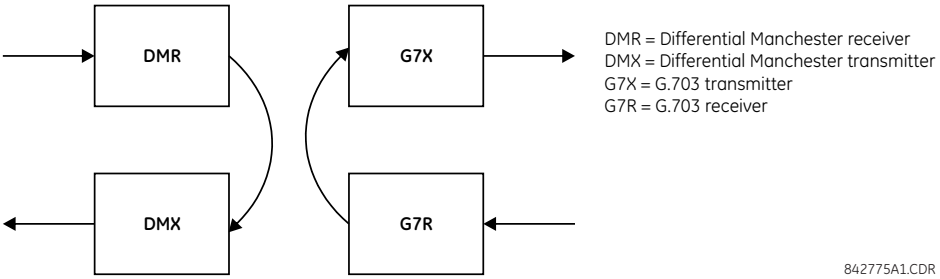

3.4.5 RS422 interface

3.4.5.1 Description

There are three RS422 inter-relay communications modules available: single-channel (module 7T), dual-channel (module 7W), and dual-channel dual-clock RS422 (module 7V). The modules can be configured to run at 64 or 128 kbps. AWG 24 twisted shielded pair cable is recommended for external connections. These modules are protected by optically-isolated surge suppression devices.

NOTE

The two-channel two-clock RS422 interface (module 7V) is intended for use with two independent channel banks with two independent clocks. It is intended for situations where a single clock for both channels is not acceptable.

The shield pins (6a and 7b) are connected internally to the ground pin (8a). Proper shield termination is as follows:

- Site 1 — Terminate shield to pins 6a or 7b or both
- Site 2 — Terminate shield to COM pin 2b

Match the clock terminating impedance with the impedance of the line.

Figure 3-44: RS422 interface connections

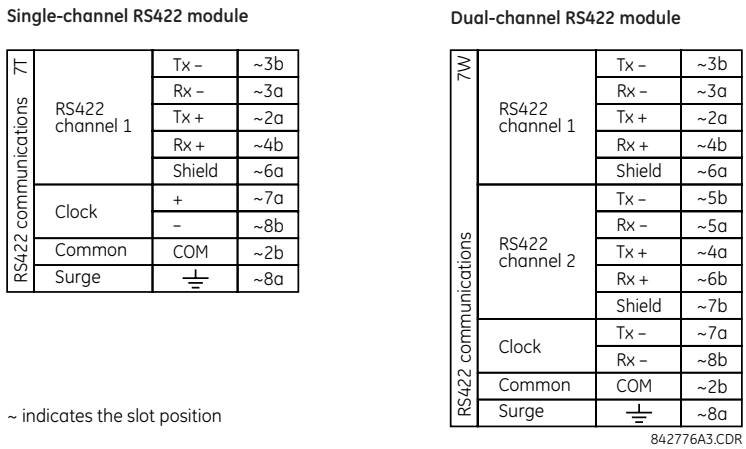

The following figure shows the typical pin interconnection between two single-channel RS422 interfaces installed in slot W. All pin interconnections are to be maintained for a connection to a multiplexer.

Figure 3-45: Typical pin interconnect between two RS422 interfaces

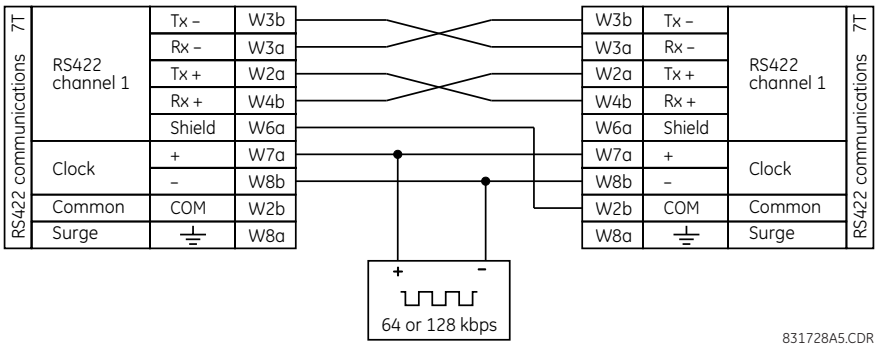

3.4.5.2 Two-channel application via multiplexers

The RS422 interface can be used for single-channel or two-channel applications over SONET/SDH or multiplexed systems. When used in single-channel applications, the RS422 interface links to higher-order systems in a typical way, observing transmit (Tx), receive (Rx), and send timing (ST) connections. However, when used in two-channel applications, certain criteria must be followed since there is one clock input for the two RS422 channels. The system functions correctly when the following connections are observed and your data module has a terminal timing feature. Terminal timing is a common feature in most synchronous data units that allows the module to accept timing from an external source. Using the terminal timing feature, two-channel applications can be achieved if these connections are followed: the send timing outputs from the multiplexer (data module 1) connects to the clock inputs of the UR RS422 interface in the usual way. In addition, the send timing outputs of data module 1 are also paralleled to the terminal timing inputs of data module 2. By using this configuration, the timing for both data modules and both UR RS422 channels is derived from a single clock source. As a result, data sampling for both of the UR RS422 channels is synchronized via the send timing leads on data module 1, shown as follows. If the terminal timing feature is not available or this type of connection is not wanted, the G.703 interface is a viable option that does not impose timing restrictions.

Figure 3-46: Timing configuration for RS422 two-channel, three-terminal application

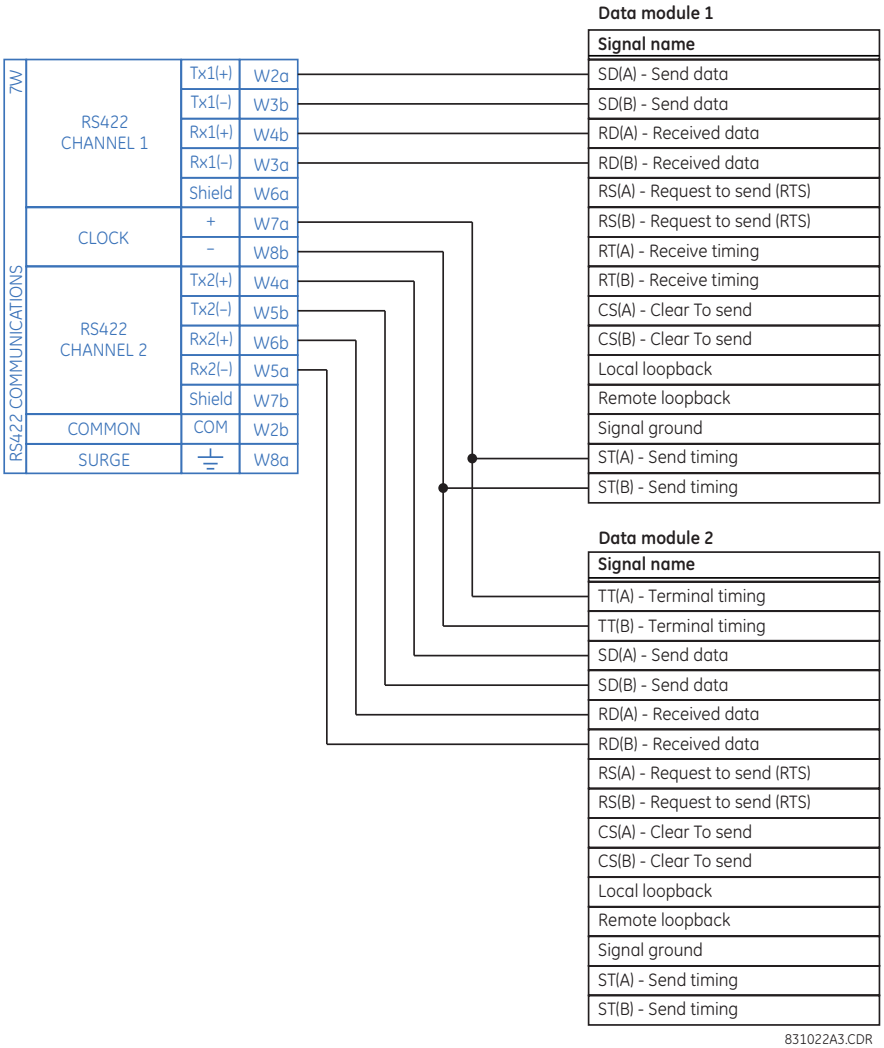

Data module 1 provides timing to the N60 RS422 interface via the ST(A) and ST(B) outputs. Data module 1 also provides timing to data module 2 TT(A) and TT(B) inputs via the ST(A) and AT(B) outputs. The data module pin numbers have been omitted in the figure because they vary by manufacturer.

3.4.5.3 Transmit timing

The RS422 interface accepts one clock input for transmit timing. It is important that the rising edge of the 64 kHz transmit timing clock of the multiplexer interface is sampling the data in the center of the transmit data window. Therefore, it is important to confirm clock and data transitions to ensure proper system operation. For example, the following figure shows the positive edge of the Tx clock in the center of the Tx data bit.

Figure 3-47: Clock and data transitions

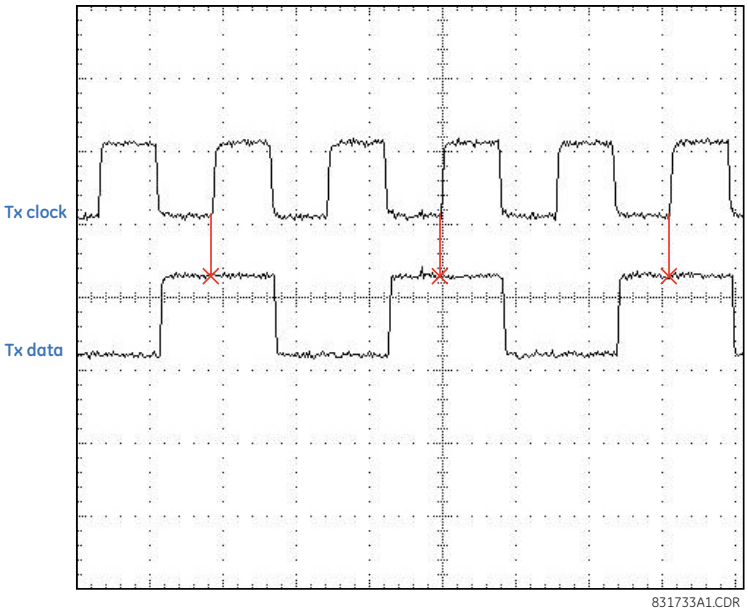

3.4.5.4 Receive timing

The RS422 interface utilizes NRZI-MARK modulation code and therefore does not rely on an Rx clock to recapture data. NRZI-MARK is an edge-type, invertible, self-clocking code.

To recover the Rx clock from the data-stream, an integrated digital phase lock loop (DPLL) circuit is utilized. The DPLL is driven by an internal clock, which is 16-times over-sampled, and uses this clock along with the data-stream to generate a data clock that can be used as the serial communication controller (SCC) receive clock.

3.4.6 Two-channel two-clock RS422 interface

The two-channel two-clock RS422 interface (module 7V) is for use with the synchrophasor feature. The figure shows the module connections.

Figure 3-48: Two-channel two-clock RS422 interface connections

7V	RS422 channel 1	Tx –	~3b
		Rx –	~3a
		Tx +	~2a
		Rx +	~4b
		Shield	~6a
RS422 communications	RS422 channel 2	Tx –	~5b
		Rx –	~5a
		Tx +	~4a
		Rx +	~6b
		Shield	~7b
	Channel 1 clock	Tx –	~7a
		Rx –	~8b
	Channel 2 clock	Tx –	~1b
		Rx –	~1a
	Common	COM	~2b
	Surge	⏚	~8a

842802A2.CDR

3.4.7 RS422 and fiber interface

The following figure shows the combined RS422 plus fiberoptic interface configuration at 64 K baud. The 7L, 7M, 7N, 7P, and 74 modules are used in two-terminal with a redundant channel or three-terminal configurations where channel 1 is employed via the RS422 interface (possibly with a multiplexer) and channel 2 via direct fiber.

AWG 20 to 24 twisted shielded pair wiring is recommended for external RS422 connections. Ground the shield only at one end. For the direct fiber channel, address power budget issues properly.

NOTICE When using a laser interface, attenuators can be necessary to ensure that you do not exceed maximum optical input power to the receiver.

Figure 3-49: RS422 and fiber interface connection

7L, 7M, 7N, 7P, and 74	Clock channel 1	+	~1a
		–	~1b
	Common	COM	~2b
RS422 communications	RS422 channel 1	Tx –	~3b
		Rx –	~3a
		Tx +	~2a
		Rx +	~4b
		Shield	~6a
	Fiber channel 2	Tx2	Rx2
	Surge	⏚	~8a

842777A3.CDR

The connections shown in the figure are for multiplexers configured as data communications equipment (DCE) units.

3.4.8 IEEE C37.94 interface

IEEE C37.94 is a standard interface between teleprotection equipment and digital multiplexers.

The UR-series IEEE C37.94 modules (module types 2G, 2H, 2I, 2J, 76, and 77) are designed to interface with IEEE C37.94 compliant digital multiplexers or an IEEE C37.94 compliant interface converter for use with direct input and output applications. The IEEE C37.94 standard defines a point-to-point optical link for synchronous data between a multiplexer and a teleprotection device. Data speed is typically 64 kbps, but the standard provides for speeds up to 64*n* kbps, where n = 1, 2,..., 12. The UR-series C37.94 communication modules are either 64 kbps (with n fixed at 1) or 128 kbps (with n fixed at 2). The frame is a valid International Telecommunications Union (ITU-T) recommended G.704 pattern from the standpoint of framing and data rate. The frame is 256 bits and is repeated at a frame rate of 8000 Hz, with a resultant bit rate of 2048 kbps.

The specifications for the module are as follows:

- IEEE standard — C37.94 for 1 × 128 kbps optical fiber interface (for 2G and 2H modules) or C37.94 for 2 × 64 kbps optical fiber interface (for 76 and 77 modules)
- Fiber-optic cable type — 50 nm or 62.5 µm core diameter optical fiber
- Fiber-optic mode — multimode
- Fiber-optic cable length — up to 2 km
- Fiber-optic connector — type ST
- Wavelength — 820 ±40 nm
- Connection — as per all fiber-optic connections, a Tx-to-Rx connection is required

The UR-series C37.94 module can be connected directly to any compliant digital multiplexer that supports the IEEE C37.94 standard. The figure shows the concept.

Figure 3-50: IEEE C37.94 connection to compliant digital multiplexer

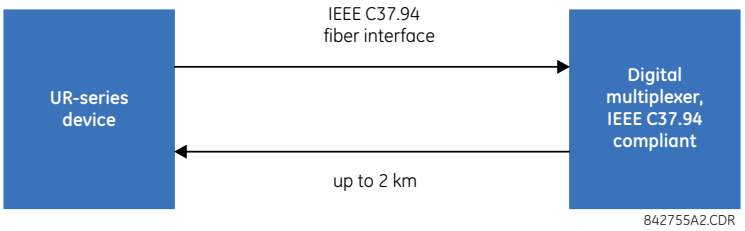

The UR-series C37.94 communication module can be connected to the electrical interface (G.703, RS422, or X.21) of a non-compliant digital multiplexer via an optical-to-electrical interface converter that supports the IEEE C37.94 standard. The following figure shows the concept.

Figure 3-51: IEEE C37.94 connection to non-compliant digital multiplexer

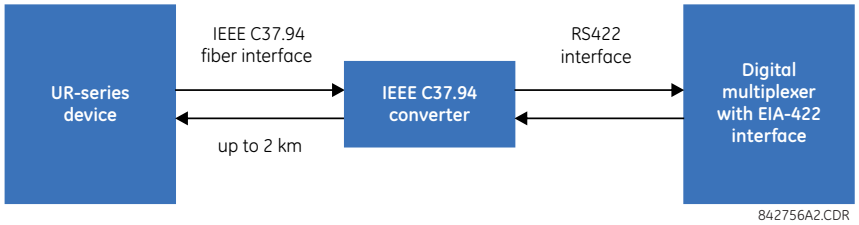

In 2008, GE Grid Solutions released revised modules 76 and 77 for C37.94 communication to enable multi-ended fault location functionality with firmware 5.60 release and higher. All modules 76 and 77 shipped since the change support this feature and are fully backward compatible with firmware releases below 5.60. For customers using firmware release 5.60 and higher, the module can be identified with "Rev D" or "Rev E" printed on it and is to be used on all ends of N60 communication for two and three terminal applications. Failure to use it at all ends results in intermittent communication alarms. For customers using firmware revisions below 5.60, it is not required to match the revision of the modules installed.

The UR-series C37.94 communication module has six switches to set the clock configuration. The following figure shows the functions of these control switches.

Figure 3-52: Switches

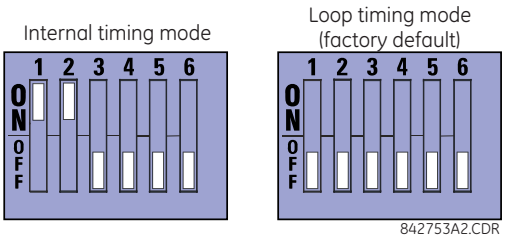

For the internal timing mode, the system clock is generated internally. Therefore, set the timing switch selection to internal timing for relay 1 and loop timed for relay 2. There must be only one timing source configured.

For the looped timing mode, the system clock is derived from the received line signal. Therefore, set the timing selection to loop timing mode for connections to higher order systems.

To remove the IEEE C37.94 communications module cover and set the switches:

1. With power to the relay off, remove the IEEE C37.94 module (type 2G, 2H, 2I, 2J, 76, or 77 module) as follows. Record the original location of the module to help ensure that the same or replacement module is inserted into the correct slot.
2. Simultaneously pull the ejector/inserter clips located at the top and bottom of each module in order to release the module for removal.
3. Remove the module cover screw.
4. Remove the top cover by sliding it towards the rear and then lift it upwards.
5. Set the timing selection switches (channels 1 and 2) to the required timing modes (see description earlier).
6. Replace the top cover and the cover screw.
7. Re-insert the IEEE C37.94 module. Take care to ensure that the correct module type is inserted into the correct slot position. The ejector/inserter clips located at the top and at the bottom of each module must be in the disengaged position as the module is inserted smoothly into the slot. Once the clips have cleared the raised edge of the chassis, engage the clips simultaneously. When the clips have locked into position, the module is inserted fully.

Figure 3-53: IEEE C37.94 timing selection switch setting

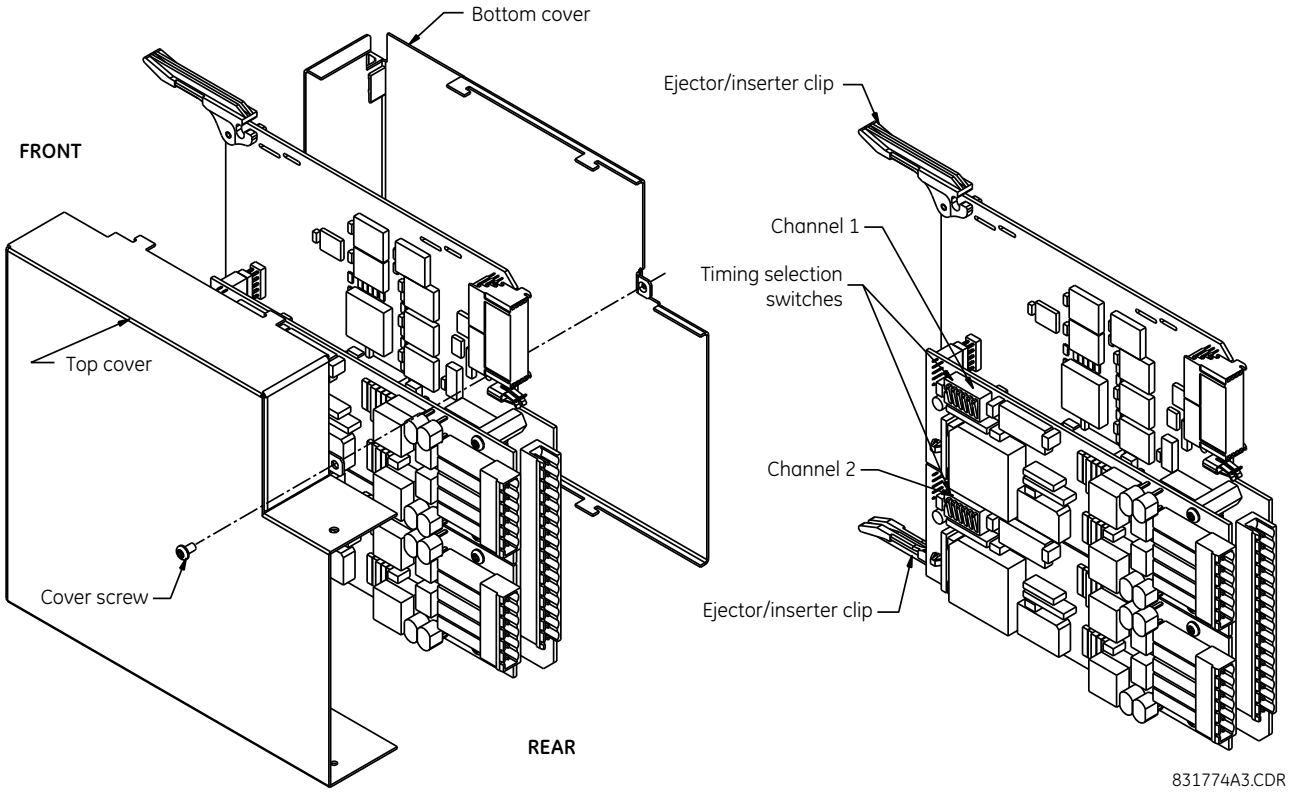

Modules shipped since January 2012 have status LEDs that indicate the status of the DIP switches, as shown in the following figure.

Figure 3-54: Status LEDs

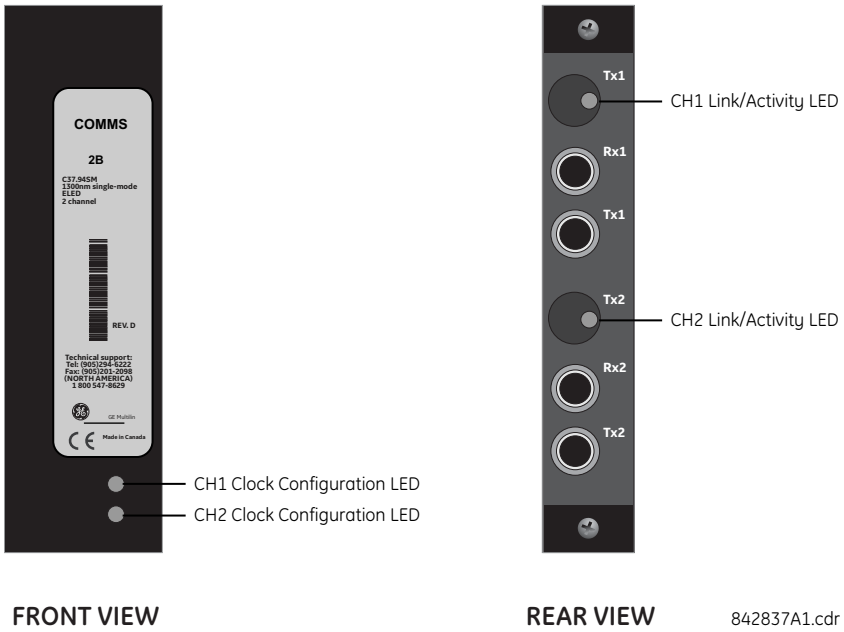

The clock configuration LED status is as follows:

- Flashing green — loop timing mode while receiving a valid data packet
- Flashing yellow — internal mode while receiving a valid data packet
- Solid red — (switch to) internal timing mode while not receiving a valid data packet

The link/activity LED status is as follows:

- Flashing green — FPGA is receiving a valid data packet
- Solid yellow — FPGA is receiving a "yellow bit" and remains yellow for each "yellow bit"
- Solid red — FPGA is not receiving a valid packet or the packet received is invalid

3.5 Activate relay

The relay is in the default “Not Programmed” state when it leaves the factory. When powered up successfully, looking at the front panel, the "Trouble" LED is on and the "In Service" LED is off. The relay in the “Not Programmed” state blocks signaling of any output relay. These conditions remain until the relay is explicitly put into “Programmed” state.

RELAY SETTINGS: **Not Programmed**	When the relay is powered up, the "Trouble LED" is on, the "In Service" LED is off, and this message displays, indicating that the relay is in the "Not Programmed" state and is safeguarding (output relays blocked) against the installation of a relay whose settings have not been entered. This message remains until the relay is explicitly put into "Programmed" state.

The relay can be activated on the front panel or in the EnerVista software.

To activate the relay using the front panel:

1. Press the **MENU** key until the **SETTINGS** header flashes momentarily and the **PRODUCT SETUP** message displays.
2. Press the **MESSAGE** right arrow until the **SECURITY** message displays.
3. Press the **MESSAGE** down arrow until the **INSTALLATION** message displays.
4. Press the **MESSAGE** right arrow until the **RELAY SETTINGS: Not Programmed** message displays.

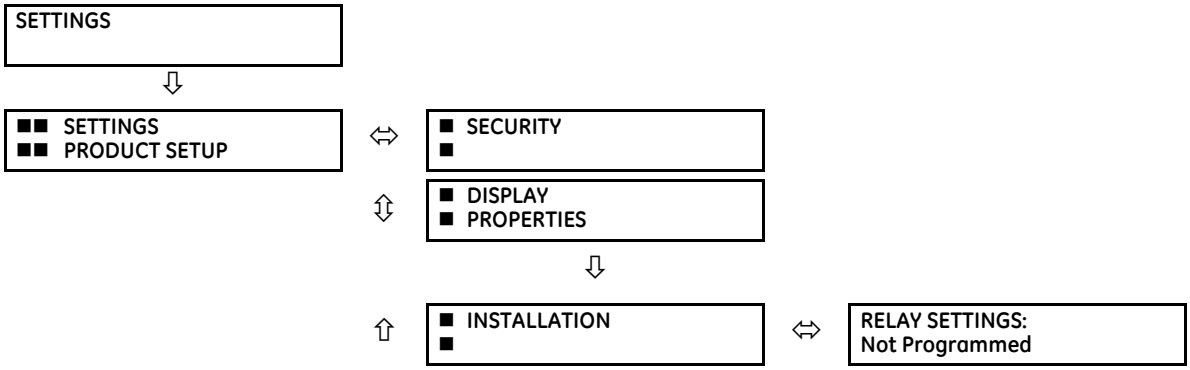

5. After the **RELAY SETTINGS: Not Programmed** message displays, press a **VALUE** key to change the selection to "Programmed."
6. Press the **ENTER** key to save the change.

7. When the "NEW SETTING HAS BEEN STORED" message appears, the relay is in "Programmed" state and the "In Service" LED turns on.

To activate the relay using EnerVista software:

1. Navigate to **Settings > Product Setup > Installation** and change the **Relay Settings** field to "Programmed."
2. Save the change.

3.6 Install software

3.6.1 EnerVista communication overview

The EnerVista UR Setup software communicates to the relay via the front panel RS232 or USB port or the rear RS485 / Ethernet ports.

To communicate via the RS232 port, use a standard straight-through serial cable. Connect the DB-9 male end to the relay and the DB-9 or DB-25 female end to the computer COM2 port as described in the CPU Communication Ports section earlier in this chapter.

Figure 3-55: Relay communication options

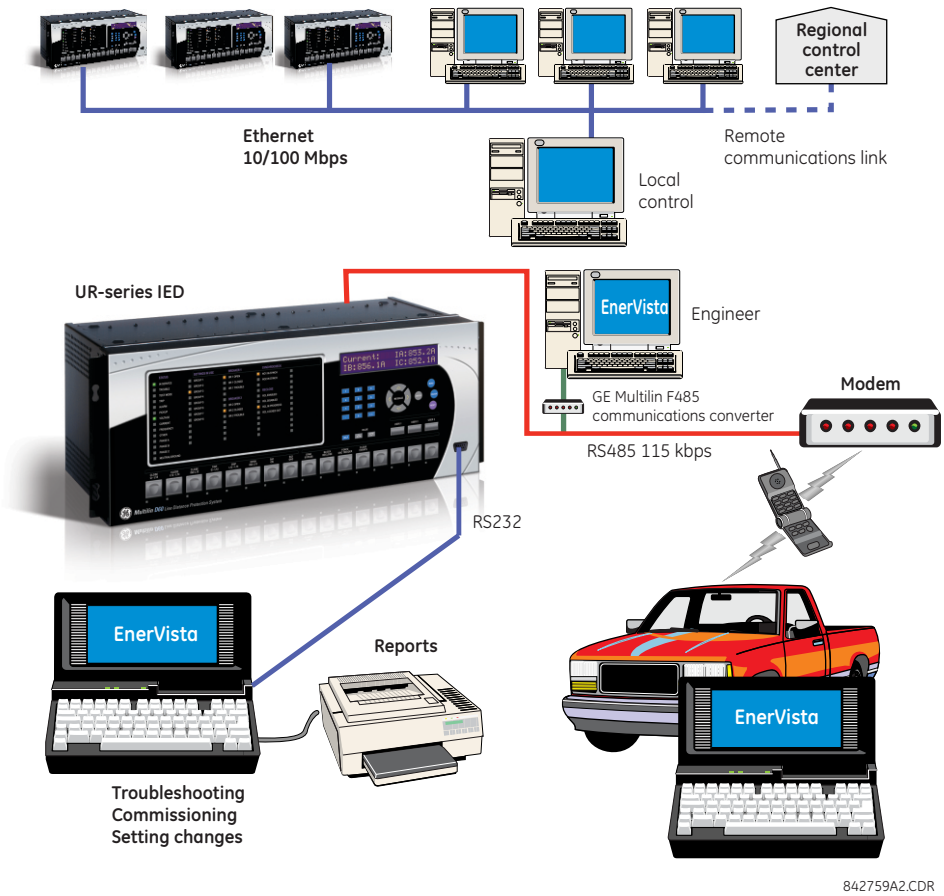

To communicate through the N60 rear RS485 port from a computer RS232 port, the GE Grid Solutions RS232/RS485 converter box is required. This device (catalog number F485) connects to the computer using a straight-through serial cable. A shielded twisted-pair wire (20, 22, or 24 AWG) connects the F485 converter to the N60 rear communications port. The converter terminals (+, –, GND) are connected to the N60 communication module (+, –, COM) terminals. See the CPU Communication Ports section in chapter 3 for details. The line is terminated with an R-C network (that is, 120 Ω, 1 nF) as described in this chapter.

3.6.2 System requirements

The relay front panel or the EnerVista UR Setup software can be used to communicate with the relay. The software interface is the preferred method to edit settings and view actual values because the computer monitor can display more information.

The system requirements for the EnerVista software are as follows:

- Intel Pentium processor (dual core) or (recommended) Core Duo
- One of the following operating systems in the required EnerVista language, such as English or French:
  - Windows 7 with Service Pack 1 (32-bit or 64-bit)
  - Windows 10
  - Windows Server 2008 Release 2 with Service Pack 1 (64-bit)
  - Windows Server 2012 Release 2 (64-bit)
  - Windows Server 2016
- 1 GB free hard drive space

- 2 GB RAM
- 1280 x 800 display screen

3.6.3 Install software

After ensuring that the requirements for using EnerVista UR Setup software are met, there are three ways to install the software:

- From the DVD
- Download EnerVista Launchpad software from http://www.gegridsolutions.com/multilin and install it
- Download the EnerVista UR Setup software from http://www.gegridsolutions.com/multilin and install it

Install on a computer that has an operating system in the required language, for example a German operating system for use with EnerVista software in German.

Unless specifically granted, the software can be installed on one computer and used by one user.

NOTE

The front panel can be switched in the EnerVista software between enhanced and basic panels under **Maintenance > Change Front Panel**.

When installing on a computer with Windows Server 2012, its Release 2 needs the KB2919355 update first. Follow the instructions described in the link, which works in Internet Explorer, not Chrome.

https://www.microsoft.com/en-US/download/details.aspx?id=42334

To install the software from the DVD and using EnerVista Launchpad:

1. Insert the DVD into the DVD drive of your computer.
2. Click the **Install Now** button and follow the instructions.
3. When installation is complete, start the EnerVista Launchpad application.
4. Click the **IED Setup** section of the **Launch Pad** window.

Figure 3-56: Adding a UR device in Launchpad window

5. In the EnerVista Launch Pad window, click the **Add Product** button and select the appropriate product as follows. Select the **Web** option to ensure the most recent software release, or select **CD** if you do not have an Internet connection, then click the **Add Now** button to list software items for the product. EnerVista Launchpad obtains the software from the Internet or DVD and automatically starts the installation program after prompting about updates.

   From the web, the software is downloaded. A wizard opens.

Figure 3-57: Identifying the UR device type

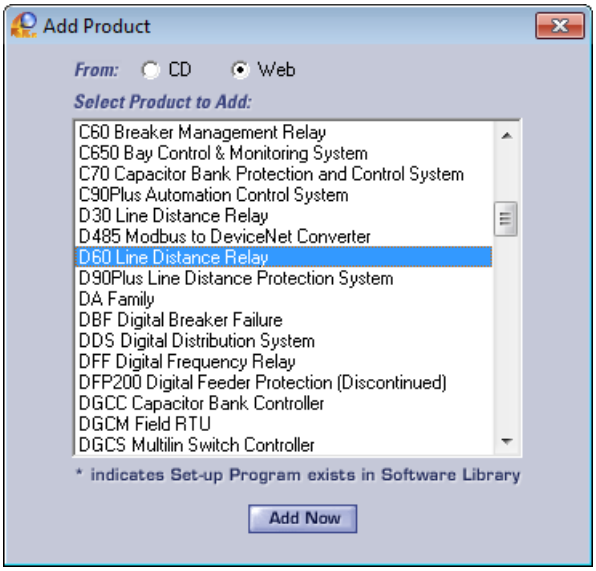

6. In the wizard, click the **Next** button and complete the process. The files are installed in the directory indicated, and the installation program automatically creates icons and adds an entry to the Windows start menu.

   The UR device is added to the EnerVista Launchpad window, as shown.

Figure 3-58: UR device added to Launchpad window

7. For other than English, configure the language for the front panel in the EnerVista software under **Settings > Product Setup > Display Properties**. User-entered strings are not translated, for example relay names, so setting the language now ensures that the names are entered/displayed in the required language. For the EnerVista software language, access the **View > Language** menu item.

3.7 Add device to software

You connect remotely to the N60 through the rear RS485 or Ethernet port with a computer running the EnerVista UR Setup software. The N60 also can be accessed locally with a computer through the front panel RS232 or USB port or the rear Ethernet port using the Quick Connect feature.

The following procedures are outlined:

- Add device for serial access; see the Configure Serial Connection section
- Add device for the rear Ethernet port; see the Configure Ethernet Connection section
- Add device for access using a modem; see the Configure Modem Connection section

- Connect locally with a computer through either the front RS232 or USB port or rear Ethernet port; see the Connect to the N60 section
- Discover automatically UR devices within a network; see the Automatic Discovery of UR Devices section

Devices in the Device Setup window are listed in the order entered.

Devices in the main software window are listed alphabetically. Use the **Device Name** to order them as required, for example B30 Odessa, B30 Truro, B90, T35.

You cannot import a file to add a device to the software. You can import settings as outlined at the end of the chapter.

The Quick Connect button also can be used to add devices. The device is added to a Quick Connect menu item in the Online Window area, cannot be moved from it to another grouping, and needs to be renamed in the Device Setup window. GE instead recommends using the Device Setup window to add devices, as outlined here.

3.7.1 Set IP address in UR

Implement IP addresses for the computer and a N60 device as follows.

The UR family supports the use of subnetworks as documented in RFC 950, which divides class-based networks into subnetworks (non-CIDR). The classes and IP address ranges are defined as follows.

Table 3-7: IP address classes

Classes	IP address range	Default subnet mask address	UR devices
A	1.0.0.0 to 127.255.255.255	255.0.0.0	65,535 or more
B	128.0.0.0 to 191.255.255.255	255.255.0.0	255 to 65,534
C	192.0.0.0 to 223.255.255.255	255.255.255.0	0 to 254
D	224.0.0.0 to 239.255.255.255	(Reserved for multicasting)	
E	240.0.0.0 to 255.255.255.255	(Reserved)	

Both network and subnet addresses are contained within a range. The number of hosts determines the class and addresses as follows:

- Class A 255.0.0.0 — The first octet (255) specifies the network, the second to fourth octets (0) specify the subnet and host. Use this class when you have more than 65,535 hosts (UR devices).
- Class B 255.255.0.0 — The first two octets (255) specify the network, the third octet (0) specifies the subnet, and the fourth octet (0) specifies the host. Use this class when you have 255 to 65,534 hosts (UR devices).
- Class C 255.255.255.0 — The first three octets (255) specify the network and the last octet (0) specifies the subnet and host. Use this class when you have up to 254 hosts (UR devices).

An example of implementation is one computer and one UR device. Because there is one UR device, class C addressing is required. So we use UR 192.167.2.x with subnet mask 255.255.255.0 and computer 192.167.3.x with subnet mask 255.255.255.0.

For older, non-CIDR routing protocols, such as RIP version 1, follow these restrictions:

- Identical subnet masks — Use a single mask for all subnets within a network
- Contiguous subnets — The subnets must be contiguous and not split among networks. The subnets cannot pass traffic through other networks.

The IP and subnet addresses need to be added to the UR for Ethernet communication.

For serial communication, for example using any front RS232 port and the Quick Connect feature, the addresses are not required, but typically they are entered to add/configure devices for regular use.

To add the IP addresses:

1. On the front of the UR, press the **MENU** key until the **SETTINGS** menu displays.
2. Navigate to one of the ports under **SETTINGS** ⇨ **PRODUCT SETUP** ⇩⇨ **COMMUNICATIONS** ⇩⇨ **NETWORK** ⇨ **NETWORK PORT** ⇩⇨ **PRT IP ADDRESS**.
3. Enter an IP address, for example 10.11.33.01, and press the **ENTER** key to save the value. For example, press the period

key to clear any existing address, then press the number keys to add a new address.

4. In the same menu, select the **PRT SUBNET IP MASK** setting. Enter a subnet IP address, for example 255.000.000.000 for 255.0.0.0. Press the **ENTER** key to save the value.
5. When connecting through an Ethernet network, also configure the gateway address under **SETTINGS** ⇨ **PRODUCT SETUP** ⇩⇨ **COMMUNICATIONS** ⇩⇨ **IPv4 ROUTE TABLE** ⇨ **DEFAULT IPv4 ROUTE** ⇨ **GATEWAY ADDRESS**. Press the **ENTER** key to save the value.

If using a blue or grey Ethernet cable, skip the rest of the this section. If using an orange cross-over Ethernet cable, the computer needs to be set up as follows.

1. Use an orange Ethernet cross-over cable to connect the computer to the rear Ethernet port. In case you need it, the following figure shows the pinout for an Ethernet cross-over cable.

Figure 3-59: Ethernet cross-over cable PIN layout

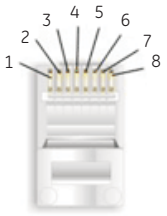

END 1		
Pin	Wire color	Diagram
1	White/orange	
2	Orange	
3	White/green	
4	Blue	
5	White/blue	
6	Green	
7	White/brown	
8	Brown	

END 2		
Pin	Wire color	Diagram
1	White/green	
2	Green	
3	White/orange	
4	Blue	
5	White/blue	
6	Orange	
7	White/brown	
8	Brown	

842799A1.CDR

Next, assign the computer an IP address compatible with the relay's IP address.

1. From the Windows desktop, right-click the **My Network Places** icon and select **Properties** to open the network connections window. Or in Windows 7, access the **Network and Sharing Center** in the Control Panel.

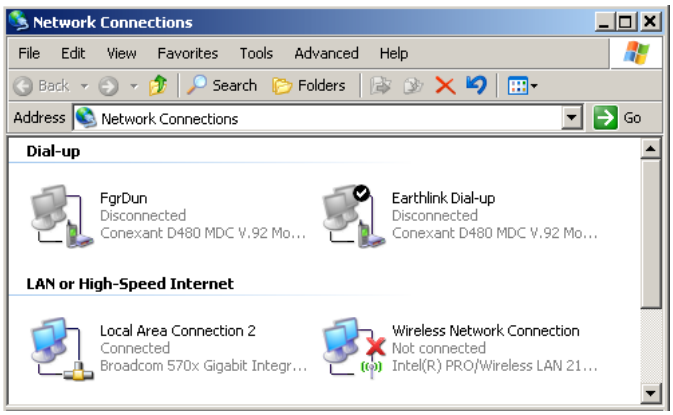

2. Right-click the **Local Area Connection** icon and select **Properties**.

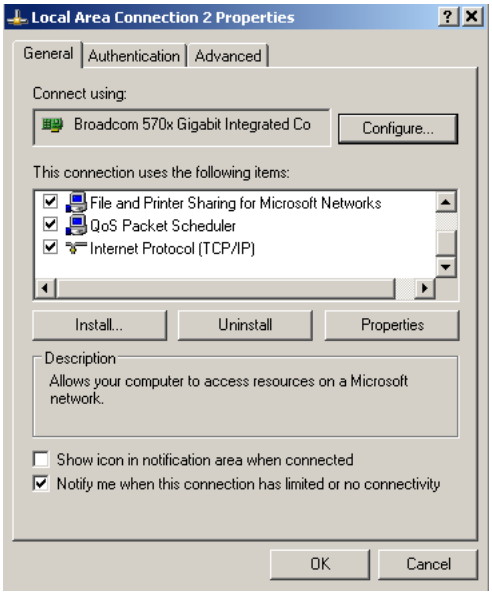

3. Select the **Internet Protocol (TCP/IP)** item from the list, and click the **Properties** button.

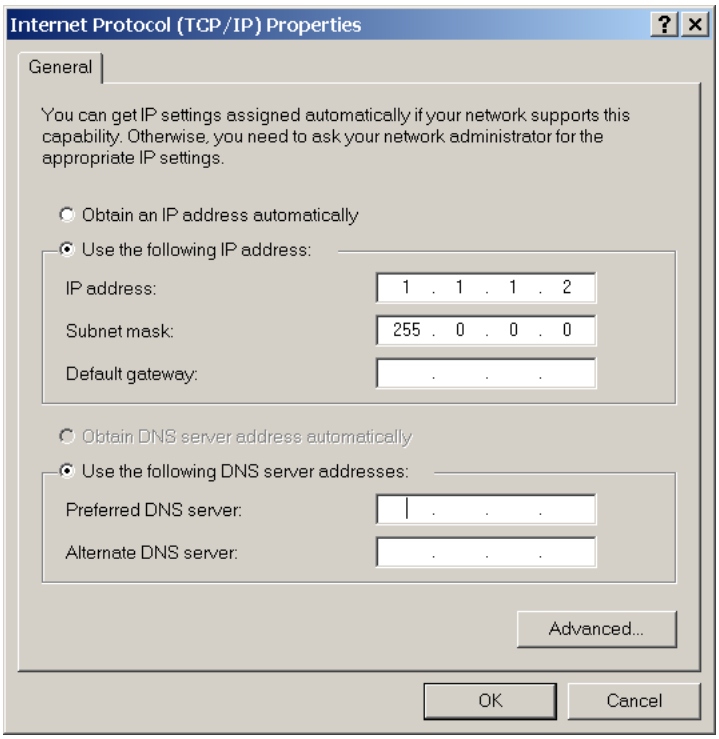

4. Click the "Use the following IP address" box.
5. Enter an **IP address** with the first three numbers the same as the IP address of the N60 relay and the last number different (in this example, 1.1.1.2).
6. Enter a subnet mask equal to the one set in the N60 (in this example, 255.0.0.0).
7. Click the **OK** button to save the values.

Before continuing, test the Ethernet connection.

1. Open a Windows console window, for example by selecting **Start > Run** from the Windows **Start** menu and typing "cmd" or clicking the **Start** button and entering "cmd".
2. Type the following command, substituting the IP address of 1.1.1.1 with yours:

```
C:\WINNT>ping 1.1.1.1
```

3. If the connection is successful, the system returns four replies similar to the following:

```
Pinging 1.1.1.1 with 32 bytes of data:
Reply from 1.1.1.1: bytes=32 time<10ms TTL=255
Reply from 1.1.1.1: bytes=32 time<10ms TTL=255
Reply from 1.1.1.1: bytes=32 time<10ms TTL=255
Reply from 1.1.1.1: bytes=32 time<10ms TTL=255
Ping statistics for 1.1.1.1:
    Packets: Sent = 4, Received = 4, Lost = 0 (0% loss),
Approximate round trip time in milliseconds:
    Minimum = 0ms, Maximum = 0ms, Average = 0 ms
```

   Note that the values for `time` and `TTL` vary depending on local network configuration.

4. If the following sequence of messages appears when entering the `C:\WINNT>ping 1.1.1.1` command:

```
Pinging 1.1.1.1 with 32 bytes of data:
Request timed out.
Request timed out.
Request timed out.
Request timed out.
Ping statistics for 1.1.1.1:
    Packets: Sent = 4, Received = 0, Lost = 4 (100% loss),
Approximate round trip time in milliseconds:
    Minimum = 0ms, Maximum = 0ms, Average = 0 ms
Pinging 1.1.1.1 with 32 bytes of data:
```

   verify the physical connection between the N60 and the computer, and double-check the programmed IP address in the **PRODUCT SETUP** ⇨⇩ **COMMUNICATIONS** ⇨⇩ **NETWORK** ⇨ **IP ADDRESS** setting, then repeat step 2.

5. If the following sequence of messages appears when entering the `C:\WINNT>ping 1.1.1.1` command:

```
Pinging 1.1.1.1 with 32 bytes of data:
Hardware error.
Hardware error.
Hardware error.
Hardware error.
Ping statistics for 1.1.1.1:
    Packets: Sent = 4, Received = 0, Lost = 4 (100% loss),
Approximate round trip time in milliseconds:
    Minimum = 0ms, Maximum = 0ms, Average = 0 ms
Pinging 1.1.1.1 with 32 bytes of data:
```

   verify the physical connection between the N60 and the computer, and double-check the programmed IP address in the **PRODUCT SETUP** ⇨⇩ **COMMUNICATIONS** ⇨⇩ **NETWORK** ⇨ **IP ADDRESS** setting, then repeat step 2.

6. If the following sequence of messages appears when entering the `C:\WINNT>ping 1.1.1.1` command:

```
Pinging 1.1.1.1 with 32 bytes of data:
Destination host unreachable.
Destination host unreachable.
Destination host unreachable.
Destination host unreachable.
Ping statistics for 1.1.1.1:
    Packets: Sent = 4, Received = 0, Lost = 4 (100% loss),
Approximate round trip time in milliseconds:
    Minimum = 0ms, Maximum = 0ms, Average = 0 ms
Pinging 1.1.1.1 with 32 bytes of data:
```

   verify the IP address is programmed in the local computer by entering the ipconfig command in the command window.

```
C:\WINNT>ipconfig
Windows IP Configuration
Ethernet adapter <F4FE223E-5EB6-4BFB-9E34-1BD7BE7F59FF>:
        Connection-specific DNS suffix. . :
        IP Address. . . . . . . . . . . . : 0.0.0.0
        Subnet Mask . . . . . . . . . . . : 0.0.0.0
        Default Gateway . . . . . . . . . :
Ethernet adapter Local Area Connection:
        Connection-specific DNS suffix  . :
        IP Address. . . . . . . . . . . . : 1.1.1.2
        Subnet Mask . . . . . . . . . . . : 255.0.0.0
        Default Gateway . . . . . . . . . :
C:\WINNT>
```


Before using the Quick Connect feature through the Ethernet port, disable any configured proxy settings in Internet Explorer.

1. Start the Internet Explorer software.
2. Select the **Tools > Internet Options** menu item and click the **Connections** tab.
3. Click on the **LAN Settings** button to open the following window.

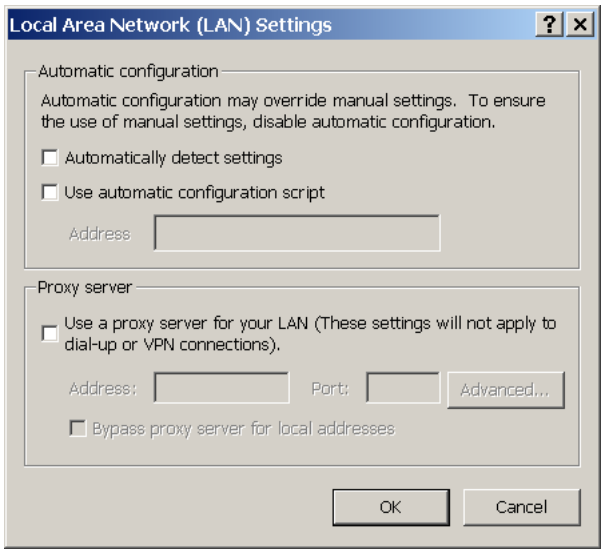

4. Ensure that the “Use a proxy server for your LAN” box is not checked.

If this computer is used to connect to the Internet, re-enable any proxy server settings after the computer has been disconnected from the N60 relay.

1. Start the Internet Explorer software.
2. Select the UR device from the EnerVista Launchpad to start EnerVista UR Setup.

3. Click the **Quick Connect** button to open the window.

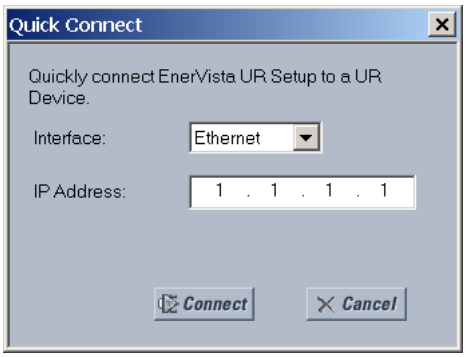

4. Select the **Ethernet** interface and enter the IP address assigned to the N60, then click the **Connect** button. The EnerVista UR Setup software creates a site named "Quick Connect" with a corresponding device also named "Quick Connect" and displays them on the left side of the screen.
5. Expand the sections to view data directly from the N60 device.

Each time that the EnerVista UR Setup software is initialized, click the **Quick Connect** button to establish direct communications to the N60. This ensures that configuration of the EnerVista UR Setup software matches the N60 model number.

When direct communications with the N60 via Ethernet is complete, make the following changes:

1. From the Windows desktop, right-click the **My Network Places** icon and select **Properties** to open the network connections window.
2. Right-click the **Local Area Connection** icon and select the **Properties** item.
3. Select the **Internet Protocol (TCP/IP)** item from the list provided and click the **Properties** button.
4. Set the computer to "Obtain a relay address automatically" as shown.

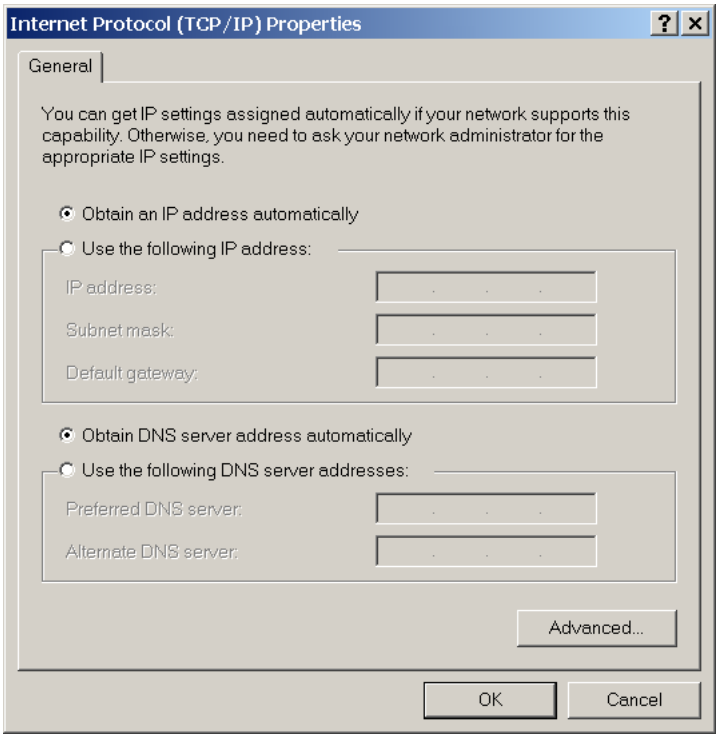

If the computer is used to connect to the Internet, re-enable any proxy server settings after the computer has been disconnected from the N60 relay.

3.7.2 Configure serial connection

Two options are possible: local connection between computer and front RS232 port, and remote connection using the rear RS485 terminals.

If using Windows 10 and a GE USB-to-Serial Cable Converter (part number 0100-0001) connected between a USB port on the computer and the front serial port on the UR, use the Prolific driver version 3.2.0.0 from the Internet.

To use the RS485 terminals at the back of the relay, a GE Grid Solutions F485 converter (or compatible RS232-to-RS485 converter) is required. See the F485 instruction manual for details.

1. Connect the computer to the F485 and the F485 to the RS485 terminal on the back of the UR device. Or connect the computer to the RS232 port on the front of the relay.
2. Start the EnerVista UR Setup software, or in EnerVista Launchpad select the UR device to start the software.
3. Click the **Device Setup** button. The window opens.
4. Click the **Add Site** button. A new category is added. Enter a site name in the **Site Name** field. Optionally add a short **Description** of the site. This example uses "Location 1" as the site name.
5. Click the **Add Device** button. A new device is added.
6. Enter a name in the **Device Name** field, up to 16 characters, and optionally add a **Description** of the site. The **Color** is for the text in the device list in the Online Window.
7. Select "Serial" from the **Interface** drop-down list. Interface parameters display that must be entered for serial communications. Try to load automatically the fields by clicking the **Read Order Code** button.

Figure 3-60: Configuring serial communication

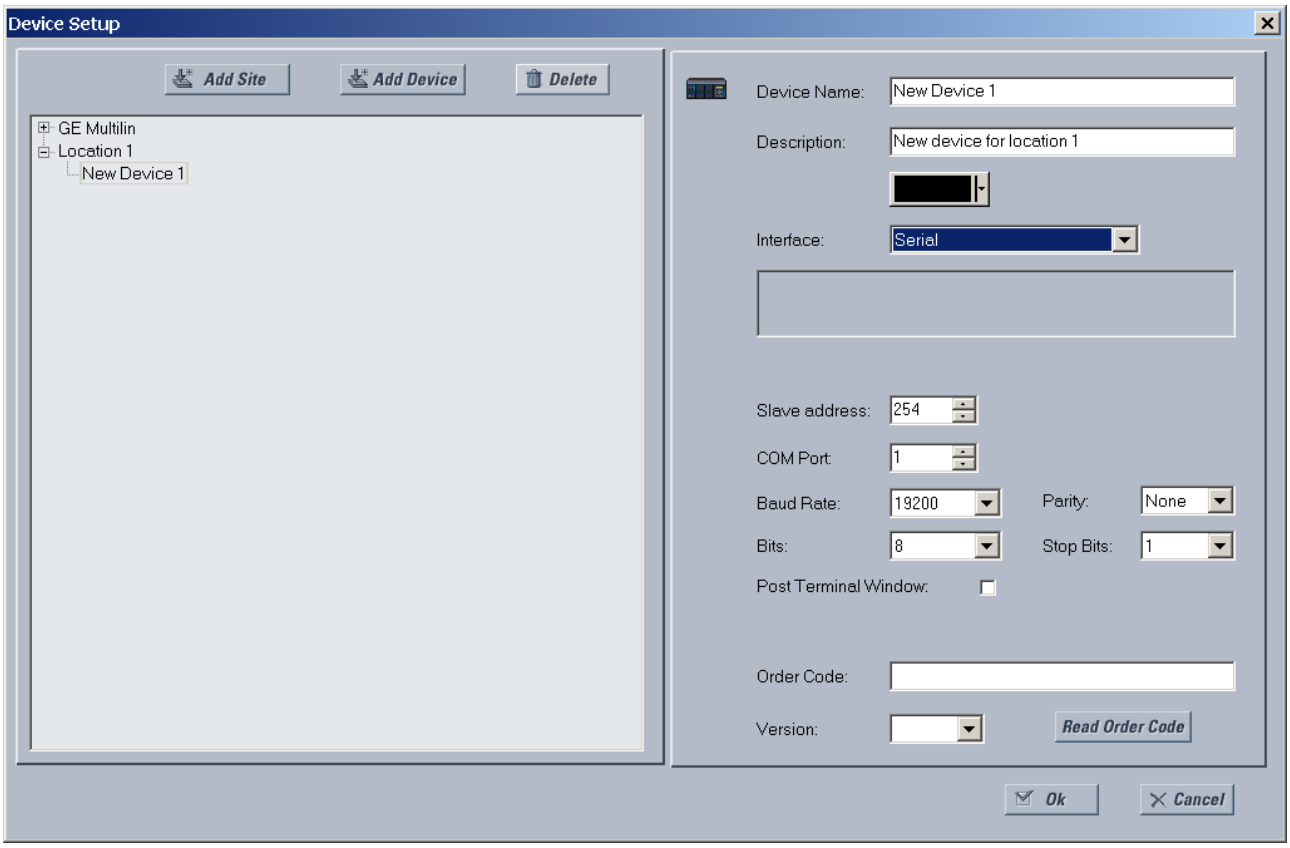

8. Enter the COM port used by the computer, the baud rate, and parity settings from the front panel **SETTINGS ⇨ PRODUCT SETUP ⇨⇩ COMMUNICATIONS ⇨ SERIAL PORTS** menu, and the relay slave address setting from the front panel **SETTINGS ⇨ PRODUCT SETUP ⇨⇩ COMMUNICATIONS ⇨⇩ MODBUS PROTOCOL ⇨ MODBUS SLAVE ADDRESS** menu in their respective fields.

   Baud Rate — Typically 19200 bits per second (bps) for RS232, and higher for RS485. Both modems need to use the same rate, meaning at the computer and the N60 ends.

   Parity — Set to None if unsure

   Bits — Set to 8 if unsure

   Stop Bits — Set to 1 if unsure

   Post Terminal Window — Enable this option if you have a Schweitzer Engineering (SEL) SEL-203x Communications Processor, such as an SEL-2030 or SEL-2032. This option enables display of a terminal window to allow interaction with the other device.
9. Click the **Read Order Code** button to connect to the N60 and upload the order code to the EnerVista software. If a communications error occurs, ensure that the EnerVista software serial communications values entered in the previous step correspond to the relay setting values, and also ensure that the same IP address is not assigned to multiple N60 ports.
10. Click the **OK** button when the relay order code has been received. The new site and device are added to the Online Window.

The device has been configured for serial communications. Proceed to the Connect to the N60 section to begin communication.

3.7.3 Configure Ethernet connection

You connect the Ethernet cable, define a site in the software, then add the relay as a device for the site.

The Ethernet cable can be connected from the relay to an Ethernet network or directly to the computer. The computer and UR device must be on the same subnet.

1. Connect the Ethernet network cable and any SFP supplied with the N60 to the Ethernet port on the CPU module at the back of the device.
2. Start the EnerVista UR Setup software, or in EnerVista Launchpad select the UR device to start the software.
3. Click the **Device Setup** button. The window opens.
4. Click the **Add Site** button. A new category is added. Enter a site name in the **Site Name** field. Optionally add a short **Description** of the site. This example uses “Location 1” as the site name.
5. Click the **Add Device** button. A new device is added.
6. Enter a name in the **Device Name** field, up to 16 characters, and optionally add a **Description** of the site. The **Color** is for the text in the device list in the Online Window.
7. Select “Ethernet” from the **Interface** drop-down list. This displays a number of interface parameters that must be entered for Ethernet functionality.

3

Figure 3-61: Configuring Ethernet communication

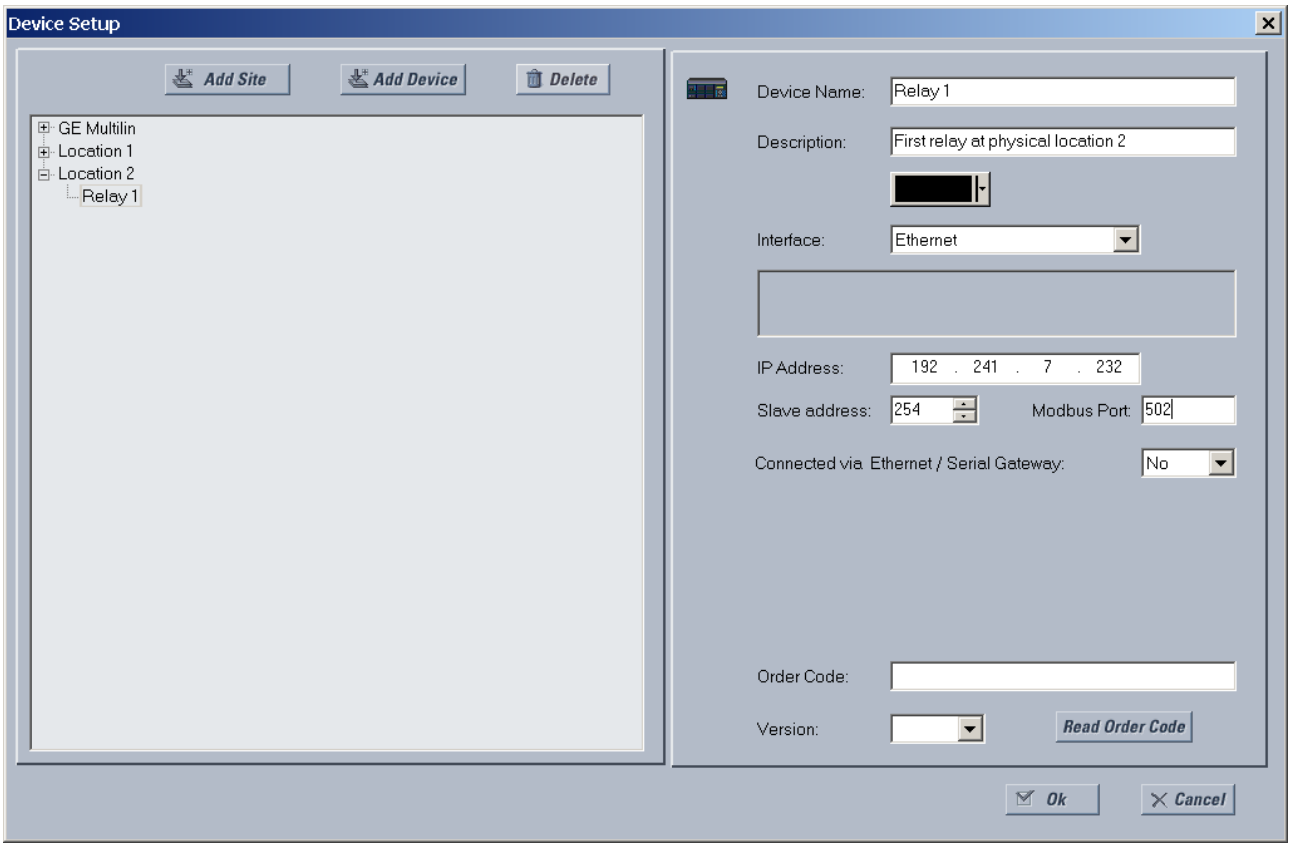

8. Enter the relay **IP Address**, which can be viewed on the device front panel under **SETTINGS** ⇨ **PRODUCT SETUP** ⇩⇨ **COMMUNICATIONS** ⇩⇨ **NETWORK** ⇩⇨ **NETWORK PORT** ⇨ **PRT IP ADDRESS**. Once the IP address is entered, try to load automatically the fields by clicking the **Read Order Code** button.
9. Enter the relay **Slave address** and **Modbus Port** address values from the settings in the front panel **SETTINGS** ⇨ **PRODUCT SETUP** ⇩⇨ **COMMUNICATIONS** ⇩⇨**MODBUS PROTOCOL** menu.
10. If using a gateway to connect to the device, select **Yes** from the drop-down list.
11. Click the **Read Order Code** button to connect to the N60 device and upload the order code. If the device was entered already, a message displays "Device 'x' is also using IP address...." If a communications error occurs, ensure that the values entered in the previous steps correspond to the relay setting values, and also ensure that the same IP address is not assigned to multiple N60 ports.
12. Click the **OK** button when the relay order code has been received. The new site and device are added to the Online Window.

The device has been configured for Ethernet communications. Proceed to the Connect to the N60 section to begin communications.

3.7.4 Configure modem connection

A modem connection allows a computer to communicate with a UR device over phone lines.

Two modems are required. One modem is connected to the UR device, either by connecting the serial cable to the front panel port or through a RS485 box to the rear terminals of the UR device. The second modem is connected to the computer that initiates the connection.

To add a UR device for modem connections:

1. Connect the modems to the computer and UR.

2. Start the EnerVista UR Setup software, or in EnerVista Launchpad select the UR device to start the software.
3. Click the **Device Setup** button. The window opens.
4. Click the **Add Site** button. A new category is added. Enter a site name in the **Site Name** field, such as London East. Optionally add a short **Description** of the site, such as the address or intersection.
5. Click the **Add Device** button. A new device is added.
6. Enter a name in the **Device Name** field, up to 16 characters, and optionally add a **Description** of the site. The **Color** is for the text in the device list in the Online Window.
7. Select "Modem" from the **Interface** drop-down list. This displays a number of interface parameters that must be entered.
8. Select "Generic Modem" from the **Modem Name** drop-down list, then enter the **Phone Number** to dial to establish communication with the remote modem.

   Post Terminal Window — Enable this option if you have a Schweitzer Engineering (SEL) SEL-203x Communications Processor, such as an SEL-2030 or SEL-2032. It enables display of a terminal window to allow interaction with the other device.
9. Once the phone number is entered, try to load automatically the device information by clicking the **Read Order Code** button.
10. Click the **OK** button when the relay order code has been received. The new device is added to the Online window.

The UR device has been added to the software.

3.7.5 Automatic discovery of UR devices

The EnerVista UR Setup software can find and communicate to all UR-family devices located on an Ethernet network.

Using the **Discover** button in the **Device Setup** window, a single click of the mouse triggers the software to detect any URs located on the network. This is done by searching a range of IP addresses based on the subnet mask of the computer. When a UR device is detected, the EnerVista UR Setup software proceeds to configure all settings and order code options in the window. This feature allows the user to identify and interrogate all UR devices at a location.

Examples of address ranges are as follows:

- If the host has an IP address of 3.94.247.10 and its subnet mask is 255.255.252.0, then the host's subnet is 3.94.244.0, and the possible IP addresses in this subnet are

  3.94.244.1 to 254

  3.94.245.1 to 254

  3.94.246.1 to 254

  3.94.247.1 to 254

  The discover function scans all those possible IP addresses to detect UR relays.
- If the host has an IP address of 3.94.247.145 and its subnet mask is 255.255.255.128, then the host's subnet is 3.94.247.128, and the discover function scans IP addresses of 3.94.247.128 to 3.94.248.254 for UR relays

To automatically add UR devices:

1. In the EnerVista software, click the **Device Setup** button. The window opens.
2. Click the **Discover** button. The software searches for UR devices on the computer subnet and adds any found to the Online Window area. If a required device is not found, add it manually as outlined earlier.

Figure 3-62: Discover button to detect UR devices in network

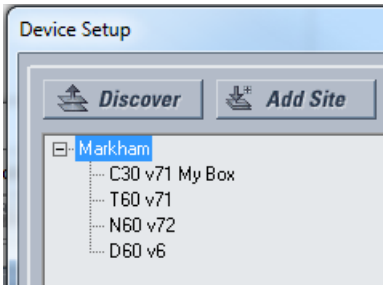

3

3.8 Connect to the N60

There are four ways to the connect to the device, as follows:

- RS232 or USB port (outlined here)
- RS485 port
- Ethernet port (outlined here)
- LAN

When unable to connect because of an "ACCESS VIOLATION," access **Device Setup** and refresh the order code for the device.

When unable to connect, ensure that the same IP address is not assigned to multiple N60 ports, for example under **Settings > Product Setup > Communications > Network**.

If still unable to connect, try unplugging and replugging the Ethernet connection. If that does not work, try to ping the device from the computer, and if unsuccessful, restart the computer.

NOTE

When multiple computers are connected to a N60 device, EnerVista settings windows are not updated automatically. They are refreshed when re-opened. If a user changes a setting on one computer, the other users need to refresh the display by closing and opening the settings window to see the change. To ensure that current settings are always viewed, close settings windows when not in use so that they are up-to-date when next accessed.

3.8.1 Connect to the N60 in EnerVista

For information on using the EnerVista software, see the Interfaces chapter.

To access the relay in EnerVista:

1. Open the **Settings > Product Setup > Display Properties** window as shown. The window opens with a status indicator on the lower left of the EnerVista UR Setup window.

Figure 3-63: EnerVista window

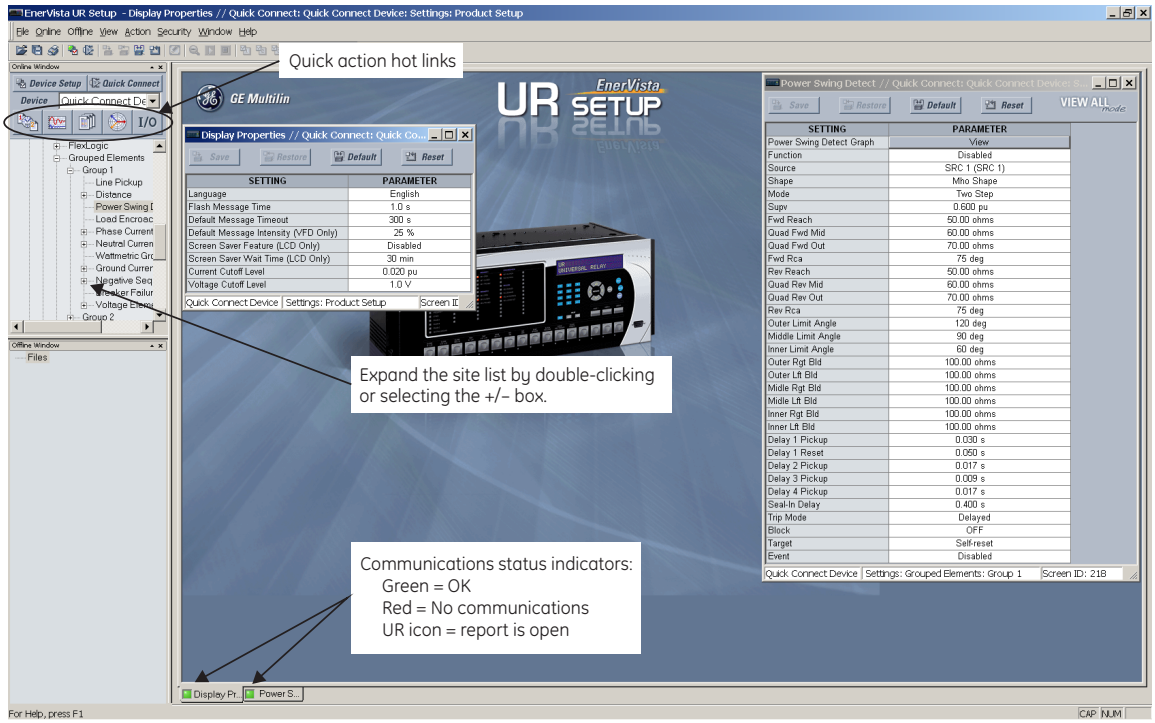

842743A3.CDR

2. If the status indicator is red, verify that the Ethernet network cable is properly connected to the Ethernet port on the back of the relay and that the relay has been properly set up for communication.
3. If a relay icon appears in place of the status indicator, then a report (such as an oscillography or event record) is open. Close the report to re-display the green status indicator.
4. The Display Properties settings can now be viewed, edited, or printed.

3.8.1.1 Quick action hot links

The EnerVista UR Setup software has several quick action buttons to provide instant access to several functions that are performed often when using URs. From the online window, users can select the relay to interrogate from a pull-down window, then click the button for the action to perform. The following quick action functions are available:

- View the event record
- View the last recorded oscillography record
- View the N60 protection summary
- View all of the N60 metering values
- View the status of all N60 inputs and outputs
- Generate a service report

3.8.2 Use Quick Connect via front RS232 port

This feature applies to the enhanced and basic front panels.

To connect to the UR from a computer using a serial cable:

1. Connect an RS232 serial cable to the computer and the front panel RS232 port. For example, use a USB-to-serial RS232 DB9M converter cable when connecting to the USB port on the computer. If using Windows 10 and a GE USB-to-Serial Cable Converter (part number 0100-0001) connected between a USB port on the computer and the front serial port on the UR, use the Prolific driver version 3.2.0.0 from the Internet.

2. Start the EnerVista UR Setup software, or in EnerVista Launchpad select the UR device to start the software.
3. Click the **Quick Connect** button. The window opens.

Figure 3-64: Quick Connect window to access a device

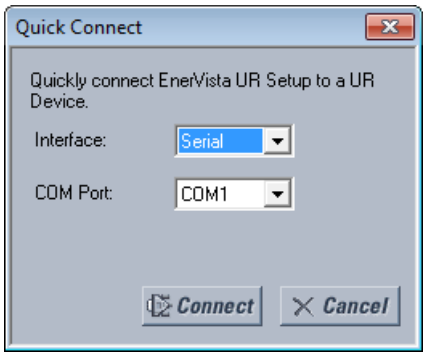

4. Select the serial **Interface** and the communications port (**COM Port**) from the drop-down lists, then click **Connect**. The COM Port is that of the computer.
5. The EnerVista software creates a site named "Quick Connect" with a corresponding device also named "Quick Connect" and displays them in the Online Window. Expand the sections to view data directly from the UR device. Use the **Device Setup** button to change the site name.

Each time that the EnerVista UR Setup software is initialized, click the **Quick Connect** button to establish direct communications to the N60. This ensures that configuration of the EnerVista UR Setup software matches the N60 model number.

3.8.3 Use Quick Connect via front USB port

This feature applies to the graphical front panel.

To connect to the UR from a computer using a USB cable:

1. Connect the cable to the computer and the front panel USB port (square connector).
2. Start the EnerVista UR Setup software, or in EnerVista Launchpad select the UR device to start the software.
3. Click the **Quick Connect** button to open the window.
4. Select the USB **Interface** and the "GE Virtual Serial Port" driver from the drop-down list, then click **Connect**. If the GE driver does not display, it means that the USB cable was connected on Windows 10 when upgrading the UR software. You need to re-install the EnerVista software with the USB cable disconnected.
5. The EnerVista software creates a site named "Quick Connect" with a corresponding device also named "Quick Connect" and displays them in the Online Window. Expand the sections to view data directly from the UR device. Use the **Device Setup** button to change the site name.

Each time that the EnerVista UR Setup software is initialized, click the **Quick Connect** button to establish direct communications to the N60. This ensures that configuration of the EnerVista UR Setup software matches the N60 model number.

3.8.4 Use Quick Connect via a rear Ethernet port

To connect to a UR using an Ethernet cable:

1. In the EnerVista software, click the **Quick Connect** button. The window opens.

Figure 3-65: Quick Connect window for Ethernet connection

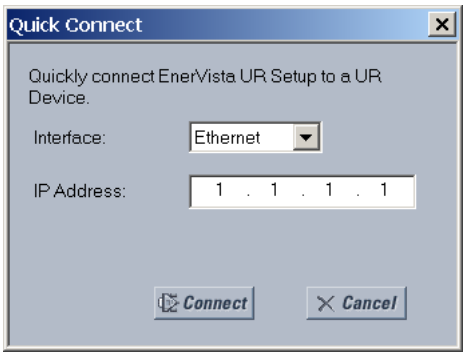

2. Select the **Ethernet** interface and enter the IP address assigned to the N60, then click the **Connect** button. The EnerVista UR Setup software creates a site named "Quick Connect" with a corresponding device also named "Quick Connect" and displays them in the Online Window.
3. Expand the sections to view data directly from the N60 device. Use the **Device Setup** button to change the site name.

Each time that the EnerVista software is initialized, click the **Quick Connect** button to establish direct communications to the N60. This ensures that configuration of the EnerVista UR Setup software matches the N60 model number.

3.9 Set up CyberSentry and change default password

If and when first using CyberSentry security, use the following procedure for set up.

1. Log in to the relay as Administrator by using the **VALUE** keys on the front panel or through EnerVista connected serially (so that no IP address is required). If logging in through EnerVista choose Device authentication (see figure). Enter the default password "ChangeMe1#". Note that the **LOCK SETTINGS** setting needs to be disabled (default) in the **SETTINGS ⇨ PRODUCT SETUP ⇨ SECURITY ⇨⇩ SUPERVISORY** menu.
2. Enable the Supervisor role if you have a need for it.
3. Make any required changes in configuration, such as setting a valid IP address for communication over Ethernet.
4. Log out of the Administrator account by choosing None.

Next, device or server authentication can be chosen on the login screen, but the choice is available only in EnerVista. Use Device authentication to log in using the five pre-configured roles (Administrator, Supervisor, Engineer, Operator, Observer, or Administrator and Supervisor when Device authentication is disabled). When using a serial connection, only Device authentication is supported. When Server authentication is required, characteristics for communication with a RADIUS server must be configured on the UR. This is possible only through the EnerVista software. The RADIUS server itself also must be configured. At the end of this instruction manual, the appendix called RADIUS Server Configuration gives an example of how to set up a simple RADIUS server. Once both the RADIUS server and the parameters for connecting the UR to the server have been configured, you can choose Server authentication on the login screen of EnerVista.

Figure 3-66: Login screen for CyberSentry

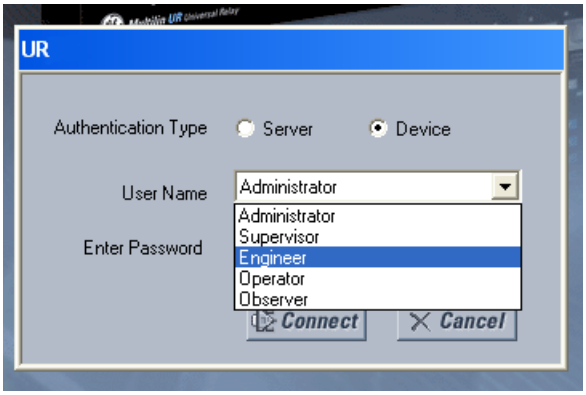

During the commissioning phase, you have the option to bypass the use of passwords. Do so by enabling the **Bypass Access** setting under **Settings > Product Setup > Security > Supervisory**. Be sure to disable this bypass setting after commissioning the device.

You can change the password for any role either from the front panel or through EnerVista. If using EnerVista, navigate to **Settings > Product Setup > Security**. Change the **Local Administrator Password**, for example. It is strongly recommended that the password for the Administrator be changed from the default. Changing the passwords for the other three roles is optional.

3.10 Import settings

Options are:

- Import settings from XML or CID file — Import all settings or a group of settings from an XML or CID file to a device in the Offline Window area. Examples are Control elements, FlexLogic operands, and System Setup settings. This feature uses a built-in import/export tool.
- Import settings from device files — Import a URS, IID, or CID file to a device in the Offline Window area.

3.10.1 Import settings from XML file

All settings, groups of settings, and/or individual settings can be imported, such as System Setup, FlexLogic operands, inputs/outputs, protection, and Control elements. A built-in import/export tool is used.

Note the following behavior:

- Available in English only
- Works in the Offline Window area
- Supports older firmware versions too, such as 6.x
- Import must be to same version, such as 8.03 to 8.03
- Except for B90, import can be to a different product, such as L90 to D60; order codes do not need to match
- Setting must exist in target device
- Complete single-line diagram can be imported, not parts of it
- Engineer function/menu item is not included
- Order codes must match when applying settings from the Offline Window area to a live device in the Online Window area. For example, settings from a C30 in the Offline Window area cannot be applied directly to a live C60 device.

NOTE

A B90 device can import settings only from a B90 device.

For information on exporting, see the Maintenance chapter.

Features in the tool include

- Ability to perform global import **(Import All** button), by current window (**Import** button), or individual setting (right-click)
- Can import from a different dataset, such as from Dataset 3 to Dataset 2
- When a setting is not present in the target device, it cannot be selected/activated for the import device and the **Import** button is inactive
- Use the search box at the top-left to locate setting names and values, highlighted in blue
- Use the **Compare by Lines** and **Compare VOs** drop-down lists to sort display of FlexLogic equations
- Use the **Left Entry From** / **Left Entry To** boxes to display select rows
- Enable the **Synchronous Scrolling** check box to lock scrolling for target and import devices
- Add rows by right-clicking; validation is done later by the software
- Use the **Comparison Report** button to view quickly all differences, whether saved or not
- Use the **Target Device Report** to view quickly the imported settings, whether saved or not
- Click the **Save** button to save imports, otherwise none are

The following procedures outline how to import settings, apply to a live device, compare settings, and view imported settings.

To import settings:

1. In EnerVista, right-click the device in the Offline Window area and select the **Import Settings** option. A window opens. If the device is not listed in the Offline Window area, right-click it in the Online Window area and select the **Add Device to Offline Window** option.
2. Select the XML file to import, and click the **Open** button.

   When the firmware versions differ, a message displays and the file cannot be imported.

   When the firmware versions match, a window opens that compares existing and import settings. Existing settings are on the left, and settings to be imported are on the right. The window for FlexLogic operands differs, allowing more granularity.

   When the order codes of the existing and imported setting files do not match, but both devices share the same function(s), then the comparison list shows the common settings instead of all the settings. For example, the distance protection function exists both in L90 and D60. The software allows importing L90 distance protection to D60 distance, and vice versa.

   With successful launch, the device with the settings to be imported displays on the right, and the targeted device to receive these settings is on the left. The differences are highlighted in orange. When check boxes are deselected on the right side, it means that there are no differences or that settings are not present in the target device. (For a summary, click the **Comparison Report** button at the top-right, as outlined in the next procedure.)

3

Figure 3-67: Import settings window before clicking Import button

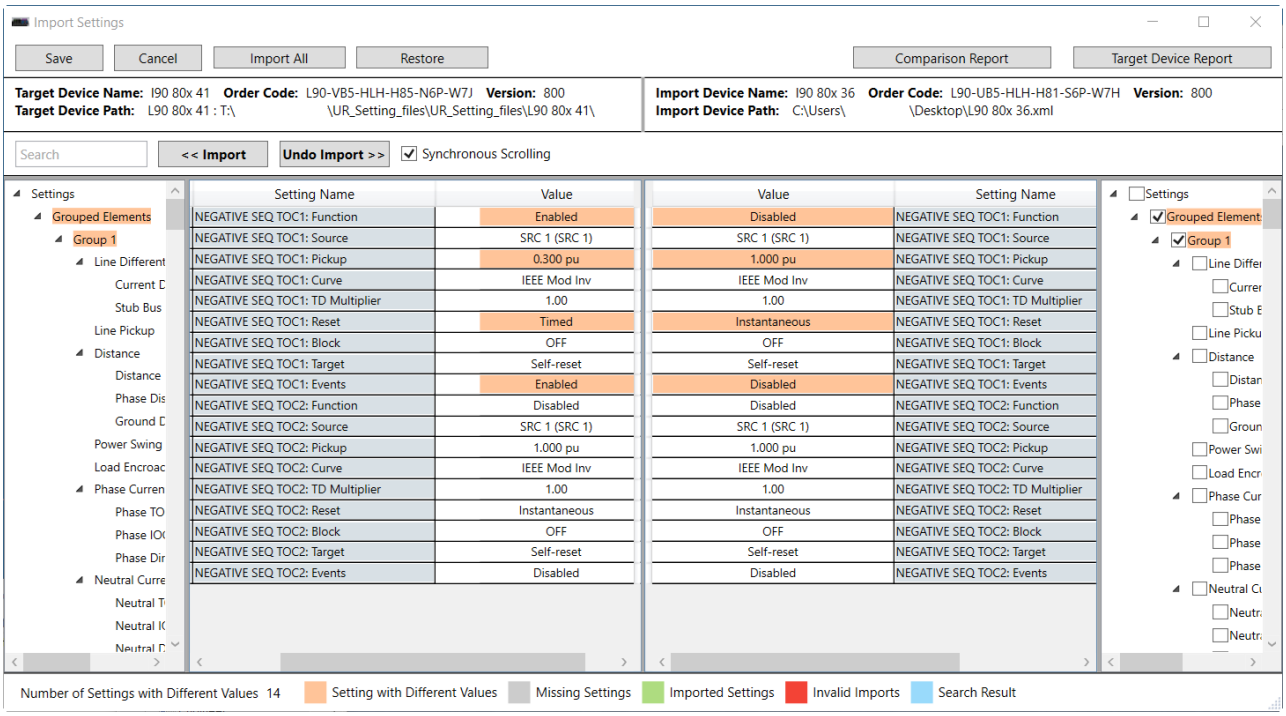

3. Review the settings, either in the main window or using the Comparison Report.

   If required, deselect any settings on the right side that are no longer wanted for import.

   If required, copy any setting in the import device by right-clicking the value, selecting the **Copy** option, and **Pasting** it in the target setting field. Or select the **Import** option.

4. To filter FlexLogic operands, click the **Compare by Lines / Compare VOs** button to toggle.

   Compare by Lines — Displays FlexLogic operands 1 to 1024.

   Compare VOs — For virtual outputs, enable the check boxes of those wanted, for both the import and target devices.

5. To import the settings for the window currently active, click the **Import** button. Or to import all settings, click the **Import All** button. The settings are imported, as shown in green.

Figure 3-68: Import settings window after clicking Import button

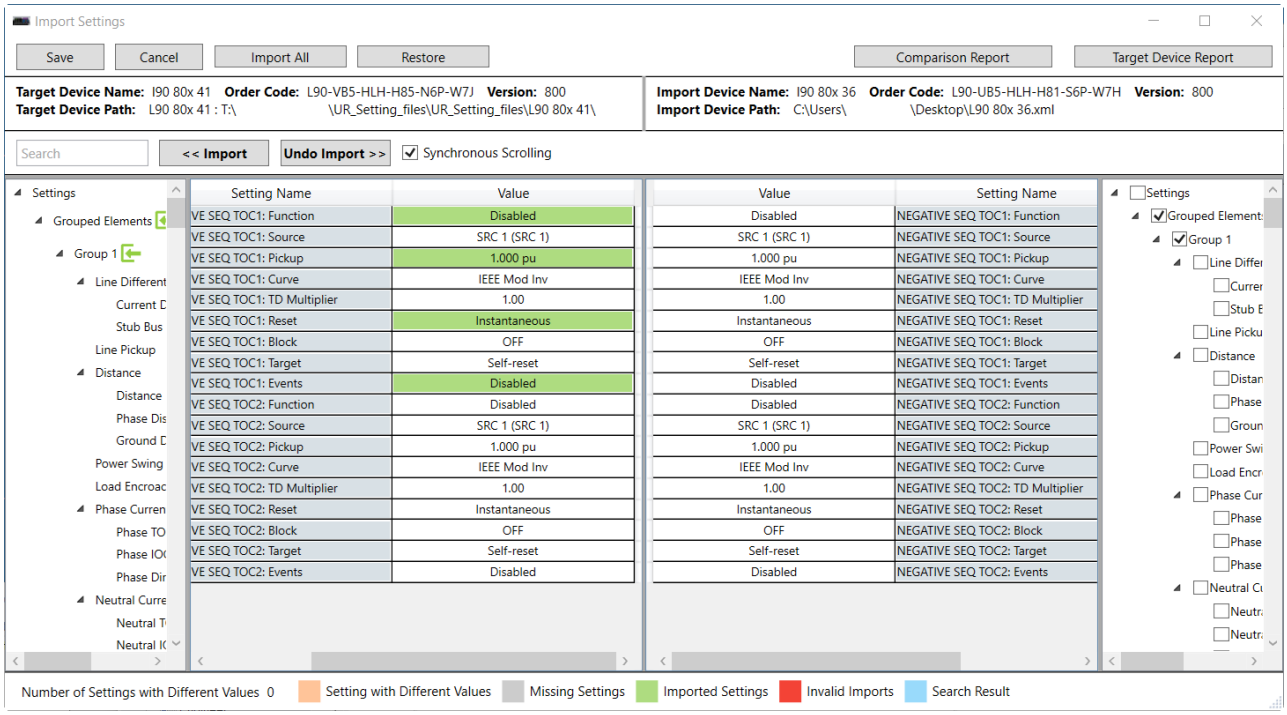

6. If required, to undo an import, click the **Undo Import** button. Or, to undo an import and to refresh all entries to their original state, click the **Restore** button.
7. To save the changes, click the **Save** button and confirm at the prompt. Or to cancel all changes, click the **Cancel** button. The window closes.

To apply the settings to a live device:

1. Drag-and-drop the device entry from the Offline Window area to an entry in the Online Window area. Individual settings also can be dragged and dropped. The order codes must match.

To compare settings:

1. Click the **Comparison Report** button at the top-right of the window. This displays a summary of activity and includes following settings: different, missing, imported, and invalid.

   Number of Differences — The number of settings in the target device having setting values different from the import device

   Number of Missing Settings — The number of settings that are not found in the target device settings

   Number of Settings Imported — The number of settings imported in the target device

   Number of Invalid Settings — The number of settings that are same in both devices but the import device setting value is not within range (out-of-range) of the target device setpoint range. For example, a 'FuncName Block' setting is available in both import and target devices. The import device 'FuncName Block' setting is configured as '87L TRIP OPIOC 1 OP,' however operand '87L TRIP OPIOC 1 OP' is not within the range of the target device.
2. To save the display as an HTML file, click the **Save to File** button.

To view imported settings on the target device:

1. Click the **Target Device Report** button at the top-right of the window.

3

When no settings have been imported yet, the window shows basic information about the receiving device, such as order code.

When settings have been imported, whether saved or not, a report displays. It is a comparison of the target device before and after import.

For invalid settings for the target device, a message displays, they are highlighted in red in the main window, and they are listed in red at the bottom of the window. This means that the target device does not have the feature and cannot accept the settings. In the example shown, the device does not have bus functions, so the settings are invalid. Scroll through the list to review the invalid settings. Note that the sets of invalid setting groups are highlighted in red on the left side of the window (not shown).

Figure 3-69: Invalid settings on the target device in red

Setting Name	Value	Value	Setting Name
Trip Bus 1 Function	Enabled	Enabled	Trip Bus 1 Function
Trip Bus 1 Block	OFF	OFF	Trip Bus 1 Block
Trip Bus 1 Pickup Delay	0.00 s	0.00 s	Trip Bus 1 Pickup Delay
Trip Bus 1 Reset Delay	0.00 s	0.00 s	Trip Bus 1 Reset Delay
Trip Bus 1 Input 1	BUS 1 OP	BUS 1 OP	Trip Bus 1 Input 1
Trip Bus 1 Input 2	OFF	OFF	Trip Bus 1 Input 2
Trip Bus 1 Input 3	OFF	OFF	Trip Bus 1 Input 3
Trip Bus 1 Input 4	OFF	OFF	Trip Bus 1 Input 4
Trip Bus 1 Input 5	OFF	OFF	Trip Bus 1 Input 5
Trip Bus 1 Input 6	OFF	OFF	Trip Bus 1 Input 6
Trip Bus 1 Input 7	OFF	OFF	Trip Bus 1 Input 7
Trip Bus 1 Input 8	OFF	OFF	Trip Bus 1 Input 8
Trip Bus 1 Input 9	OFF	OFF	Trip Bus 1 Input 9
Trip Bus 1 Input 10	OFF	OFF	Trip Bus 1 Input 10

Error Screen Name	Error Setting Name	Error Message	Original Value
Trip Bus	Trip Bus 1 Input 1	Flexlogic value (BUS 1 OP) is invalid.	OFF
Trip Bus	Trip Bus 2 Input 1	Flexlogic value (BUS 2 OP) is invalid.	OFF
Trip Bus	Trip Bus 3 Input 1	Flexlogic value (BUS 3 OP) is invalid.	OFF

2. To save the display as an HTML file, click the **Save to File** button.

3.10.2 Import settings from device files

The following file types can be imported:

- URS — UR settings file (firmware version 7.3x or earlier)
- IID — Instantiated IED capability description file — Actual settings on UR
- CID — Configured IED description file — Settings sent to the UR (may or may not be actual settings). When using IEC 61850, network settings can also be configured by accepting a CID file that includes them, as long as the IP address of at least one port is manually configured in the relay before the CID file is sent and the IP address matches that in the file.

The import is done in the Offline Window area.

To import a settings file:

1. In the Offline Window area, right-click the device and select the **Add Device from File** option. The device is that from which you want to import settings.
2. If required, change the **Files of type** drop-down list.
3. Select the file to import.

To apply the settings to a live device:

1. Drag-and-drop the device entry from the Offline Window area to its entry in the Online Window area. Individual settings also can be dragged and dropped. The order codes must match.

This is what happens:

- CID — For version 7.30 or later, a new URS file generates and moves into a new device folder, generating SCL files from the new URS file. Files in the folder have new time stamps. The CID file retains its time stamp.
- URS — When not IEC 61850 and version is lower than 7.30, the file is added and time stamp is unchanged. When clicking in the software on the tree element, a device folder is created, the original file moves into it, and time stamp is on the URS file is retained.

  When IEC 61850 and version is 7.30 or later, the file is added and time stamp is unchanged. When clicking in the software on the tree element, a device folder is created, the original file moves into it, SCL files are generated there, and the "Last modified" time stamp on the URS file changes.

3.11 Connect to D400 gateway

A GE Multilin D400 Substation Gateway can be used to collect data from UR devices in a local area network (LAN). It collects metering, status, event, and fault report data from serial or LAN-based intelligent substation devices, and it pre-processes the data. The D400 supports up to 16 serial and eight network connections, with multiple devices possible on each serial connection. Up to 10 concurrent file transfer sessions are possible, meaning data for up to 10 URs can be transferred at the same time and any additional IEDs are queued on a first-come-first-served basis. The D400 can then upload files to a demilitarized zone (DMZ) server at the enterprise level.

Setup is as follows. For UR devices with the CyberSentry software option, when there is a need to retrieve periodically the logs from the UR securely without a human interface, the following approach can be used. See the D400 manual for configuration details to achieve it.

A UR in the substation can authenticate a user either connecting to a RADIUS server or on the device itself. This depends on the user name used for authentication on a connection. The D400 connects to the UR device using an Ethernet, USB, or serial port on the UR. At the other end, the cable attaches to the rear of D400. Use the D400 software to configure a serial or network communication/connection for the UR, then to configure the IED device blocks/clients for the UR, and then to configure record retrieval. Once configured, the UR and D400 use a keyfile authentication mechanism to establish communication.

For UR devices with the IEC 61850 software option, also use the D400 IEC 61850 Loader software.

When a D400 detects new files available for download from a UR, it connects to the UR and reads the files via Secure File Transfer Protocol (SFTP) protocol. The following files can be transferred:

- Oscillography files
- Event records
- Log files
- Configuration (setting) files

The D400 information is viewable in its software and in a web browser.

NOTICE The D400 is discontinued and no longer offered. The G500 is a replacement to the D400, where the same file retrieval services and cyber security connection can be used.

3.11.1 Oscillography files

These are stored in COMTRADE format in the D400 folder system using the UR site and device name.

3.11.2 Event records

These are stored as the EVT.TXT file in the D400 folder system using the UR site and device name.

3.11.3 Log files

Log files can be retrieved for UR 7.0 and later. The following file types are possible, stored in the D400 folder system using the UR site and device name:

- factory_event.txt — Information about change methods and origins. Saved with a "_YYMMDDhhmmss" retrieval time stamp, for example FACTORY_EVENT_170525183124.TXT.
- setting_changes.log — Information on what settings have been changed. Saved with a "_YYMMDDhhmmss" retrieval time stamp, for example SETTING_CHANGES_170525183124.TXT.

3.11.4 Setting files

These are the configuration/settings files in the IEC 61850 SCL/IID format. The ur.iid file is saved with a "_YYMMDDhhmmss" retrieval time stamp, for example ur_170525183124.iid. It is stored in the D400 folder system using the UR site and device name.

N60 Network Stability and Synchrophasor Measurement System

Chapter 4: Interfaces

This chapter explains the EnerVista software interface, the front panel interface, logic diagrams, and Engineer interface for logic design and monitoring.

4.1 EnerVista software interface

4.1.1 Introduction

The EnerVista UR Setup software provides a single facility to configure, monitor, maintain, and troubleshoot relays connected over local or wide-area networks. It can be used while disconnected (offline) or connected (online) to a UR device. In offline mode, settings files can be created for eventual downloading to the device. In online mode, communication with the device is real-time.

The EnerVista UR Setup software is provided with every N60. This chapter outlines the EnerVista software interface. The EnerVista UR Setup help file in the software also provides details for getting started and using the software interface.

4.1.2 Settings files

The EnerVista software supports the following three ways of handling changes to relay settings:

- In offline mode (relay disconnected) to create or edit relay settings files for later transfer to relays
- While connected to a relay to modify relay settings, and then save the settings to the relay
- Create/edit settings files and then write them to the relay while connected to the relay

See the back up section in the Maintenance chapter for instructions on how to create a settings file either offline or online.

Settings files are organized on the basis of file names assigned by the user. A settings file contains data pertaining to the following types of relay settings:

- Device definition
- Product setup
- System setup
- FlexLogic
- Grouped elements
- Control elements
- Inputs/outputs

- Remote resources
- Testing

Factory default values are supplied and can be restored after any changes.

The following communications settings are not transferred to the N60 with settings files:

Modbus Slave Address
Modbus TCP Port Number
RS485 COM2 Baud Rate
RS485 COM2 Parity
COM2 Minimum Response Time
COM2 Selection
RRTD Slave Address
RRTD Baud Rate
IP Address (see end of previous chapter for information)
IP Subnet Mask
IP Routing

When a settings file is loaded to a N60 that is in-service, the following sequence occurs:

1. The N60 takes itself out of service.
2. The N60 issues a UNIT NOT PROGRAMMED major self-test error.
3. The N60 closes the critical fail contact.

The Maintenance chapter outlines how to use a settings file in the .urs format for backup and restore.

4.1.3 Event viewing

In online or offline mode, you can view and analyze data generated by triggered parameters as follows:

- **Event recorder** — The event recorder captures contextual data associated with the last 1024 events, listed chronologically from most recent to oldest
- **Oscillography** — The oscillography waveform traces and digital states are used to provide a visual display of power system and relay operation data captured during specific triggered events

Event records are viewable at software and device-specific levels. Access the former under **Admin > Event Log > View**. Access the latter under **Actual Values > Records > Event Record**.

Event record entries for CyberSentry are explained in the next chapter. The following table outlines some software-level entries.

Table 4-1: Event record descriptions

Event	Description
EnerVista UR Setup SESSION STARTED	The EnerVista software was launched
Language was changed.	The user changed the software language using the **View > Language** menu item
: Successful upload of firmware END Firmware verified Firmware uploaded Firmware erased START: Upload new firmware	The firmware on a device was upgraded
EnerVista UR Setup EVENT LOG CLEARED	The event record was cleared. All event records were deleted using the **Admin > Event Log > Clear** menu item.

4.1.4 File support

The following support applies, where the Settings List is at the bottom left and the Site List is at the top left of the EnerVista window:

- **Execution** — Any EnerVista UR Setup file that is opened launches the application or provides focus to the already opened application. If the file was a settings file (has a .urs extension) that had been removed from the Settings List navigation menu, it is added back to the menu.
- **Drag and Drop** — The device settings and individual settings can be dragged and dropped between the Online and Offline Window areas. Also, any Windows Explorer directory folder is a file drag source and drop target.

  New files that are dropped into the Offline Window are added to the tree, which is automatically sorted alphabetically with respect to settings file names. In the Online Window, files or individual menu items that are dropped in the selected device menu are sent automatically to the online device.

4.1.5 EnerVista main window

The EnerVista UR Setup software window has the following components:

1. Title bar that shows the pathname of the active data view or the name of the software
2. Main window menu bar
3. Main window toolbar
4. Site list / online window area
5. Settings list / offline window area
6. Software windows, with common toolbar
7. Settings file data view windows, with common toolbar
8. Workspace area with data view tabs
9. Status bar
10. Quick action hot links

Figure 4-1: EnerVista UR Setup software window

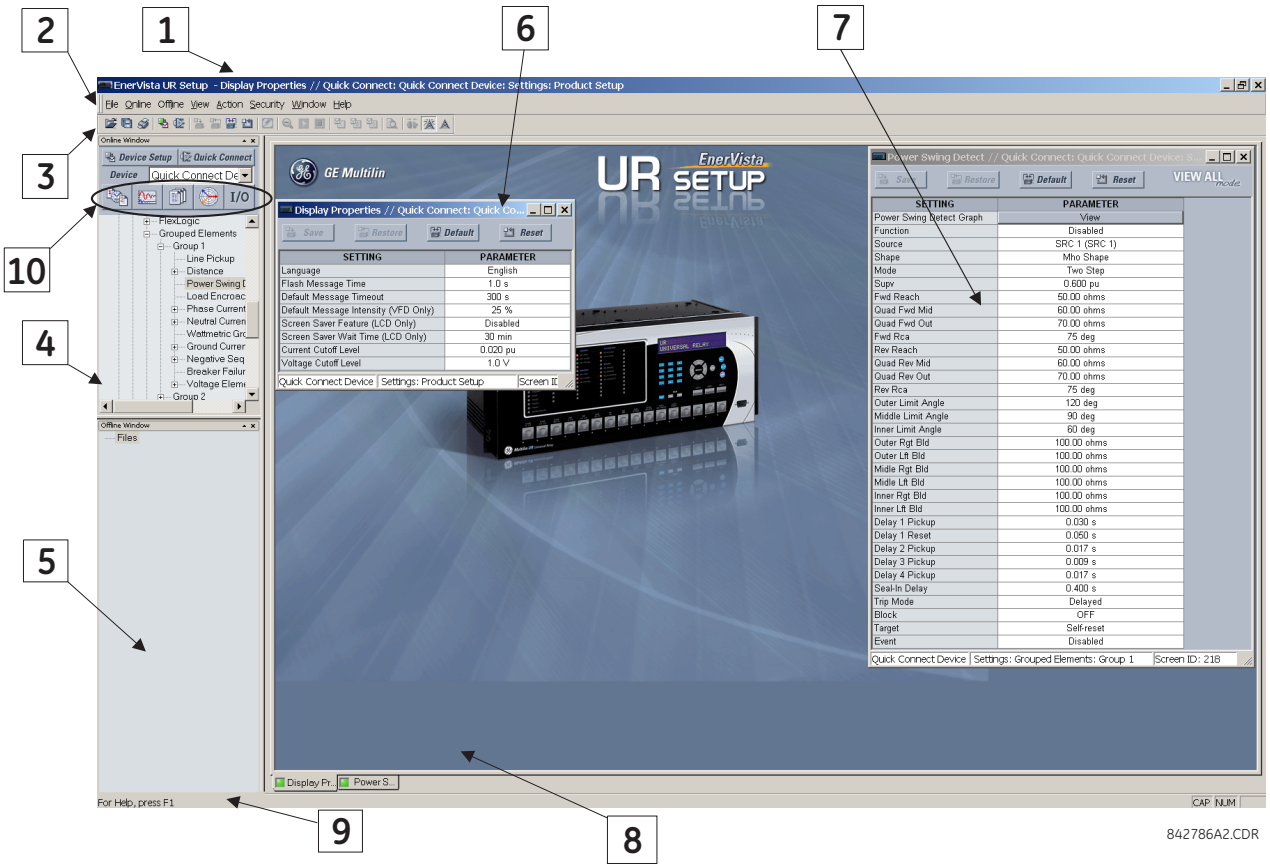

When the Offline Window has devices saved to it, it includes a **Reserved** entry with spare settings when customer-specific functions are provided on a UR.

Figure 4-2: Reserved settings

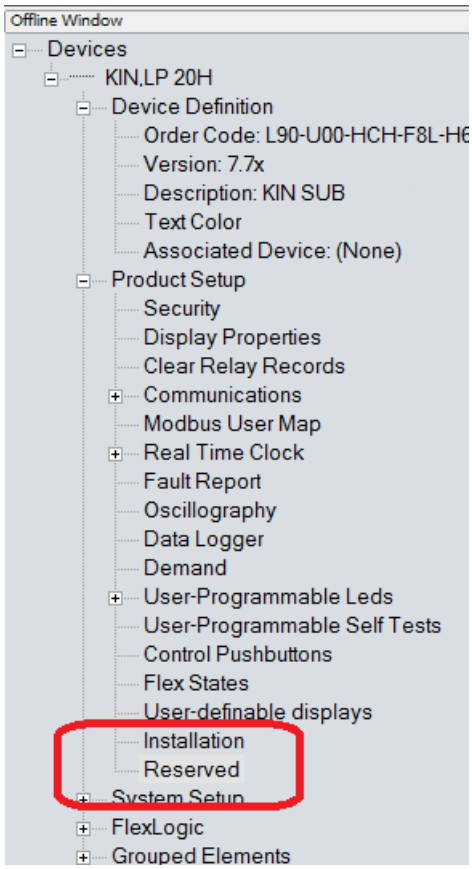

4.1.6 Protection summary window

The Protection Summary is a graphical user interface to manage elements, such as enabling and disabling them. Access it under **Settings > Protection Summary**. See the Settings chapter for information on use.

Figure 4-3: Protection Summary interface (B30 example shown)

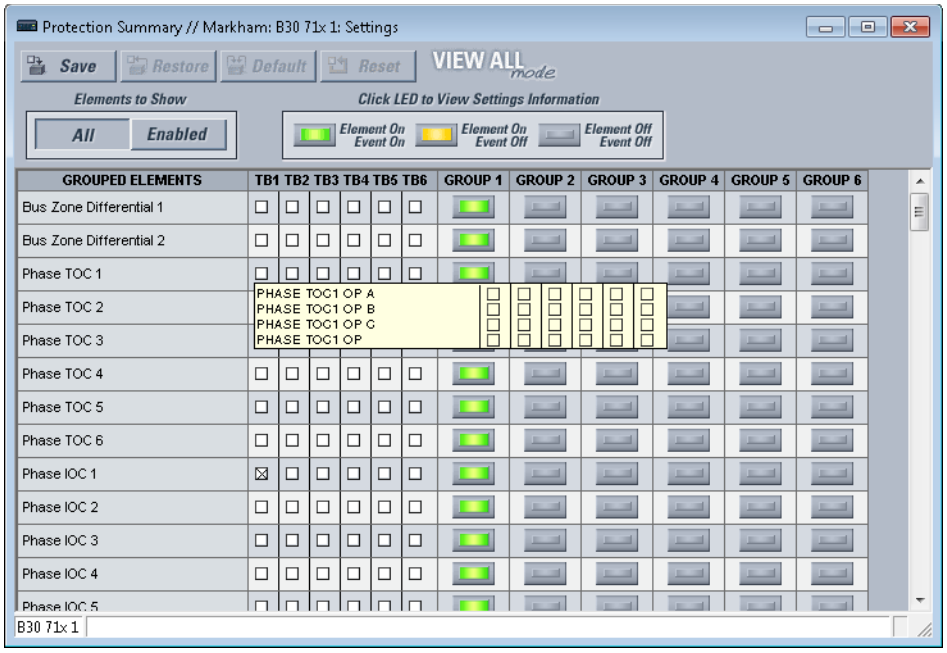

4.1.7 Settings templates

Settings file templates simplify the configuration and commissioning of multiple relays that protect similar assets. An example is a substation that has 10 similar feeders protected by 10 UR F60 relays.

In these situations, typically 90% or greater of the settings are identical among devices. The templates allow engineers to configure and test these common settings, then lock them so that they are not available to users. For example, locked settings can be hidden from view for field engineers, allowing them to quickly identify and concentrate on specific settings.

The remaining settings (typically 10% or less) can be specified as editable and made available to field engineers installing the devices. These are settings such as protection element pickup values and CT and VT ratios.

The settings template mode allows the user to define which settings are visible in the software. Settings templates can be applied to both settings files (settings file templates) and online devices (online settings templates). The functionality is identical for both purposes.

NOTE

Template mode is available in the English software only.

Settings file conversion from previous firmware versions is supported.

4.1.7.1 Enable the settings template

The settings file template feature is disabled by default. It can be enabled in offline or online mode.

To enable in offline mode the settings template for UR settings files:

1. Locate the settings file in the Offline Window area of the EnerVista UR Setup software. If not there, a file can be added from an online device by right-clicking it and selecting the **Add Device to Offline Window** option.
2. In the Offline Window area, right-click the selected device or settings file and select the **Template Mode > Create Template** option.

   The settings file template is now enabled and the file menus display in light blue. The settings file is now in template editing mode. To undo the action, select **Template Mode > Remove Template**.

Alternatively, to apply the settings template to online settings:

1. Locate the device in the Online Window area of the EnerVista UR Setup software.
2. Right-click the device and select the **Template Mode > Create Template** option. The software prompts for a template password. This password is required to use the template feature and must be at least four characters in length.

Figure 4-4: Entering a settings file password

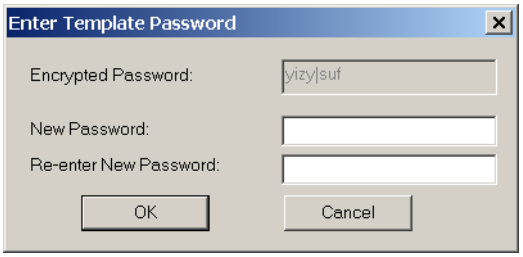

3. Enter and re-enter the new password, then click **OK** to continue.

   The online settings template is now enabled. The device is now in template editing mode.

4.1.7.2 Edit the settings template

The settings template editing feature allows the user to specify which settings are available for viewing and modification in EnerVista UR Setup. By default, all settings except the FlexLogic equation editor settings are locked.

1. With the template already enabled, locate the device or settings file in the Online or Offline Window area in the software.
2. Right-click the device or file and select the **Template Mode > Edit Template** option to verify or place the device in template editing mode (check mark beside option). If prompted, enter the template password then click **OK**.
3. Open the relevant settings window that contains settings to be specified as viewable.

   By default, all settings are specified as locked and displayed against a grey background. The icon on the upper right of the settings window indicates that the EnerVista software is in **EDIT mode**. The following example shows the phase time overcurrent settings window in edit mode.

Figure 4-5: Settings template with all settings specified as locked

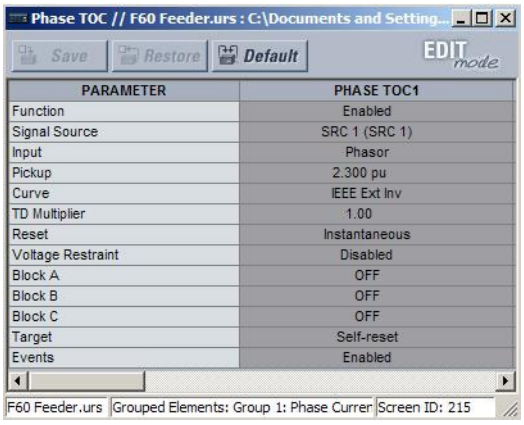

PARAMETER	PHASE TOC1
Function	Enabled
Signal Source	SRC 1 (SRC 1)
Input	Phasor
Pickup	2.300 pu
Curve	IEEE Ext Inv
TD Multiplier	1.00
Reset	Instantaneous
Voltage Restraint	Disabled
Block A	OFF
Block B	OFF
Block C	OFF
Target	Self-reset
Events	Enabled

4. Specify the settings to make viewable by clicking them.

   A setting available to view displays with a yellow background.

Figure 4-6: Settings template with two settings specified as editable

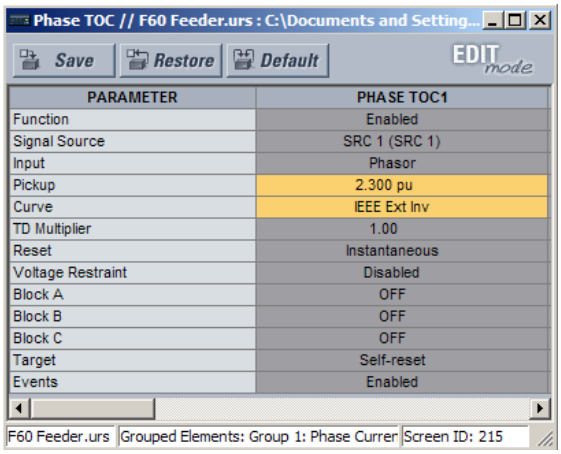

PARAMETER	PHASE TOC1
Function	Enabled
Signal Source	SRC 1 (SRC 1)
Input	Phasor
Pickup	2.300 pu
Curve	IEEE Ext Inv
TD Multiplier	1.00
Reset	Instantaneous
Voltage Restraint	Disabled
Block A	OFF
Block B	OFF
Block C	OFF
Target	Self-reset
Events	Enabled

5. Click the **Save** button to save changes to the settings template.
6. Continue through any other settings window to specify all viewable settings.

   The next time that the device/settings are accessed, only those specified as viewable/editable display in the menu hierarchy.

4

4.1.7.3 Add password protection to a template

GE recommends that templates be saved with password protection to maximize security.

NOTE

When templates are created for online settings, the password is added during the initial template creation step. It does not need to be added after the template is created.

To add password protection to a settings file template:

1. In the Offline Window area, right-click the device and select the **Template Mode > Password Protect Template** option.

   The software prompts for a template password. This password must be at least four characters in length.

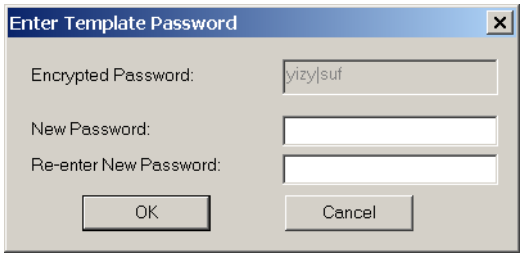

2. Enter and re-enter the new password, then click **OK** to continue.

The settings file template is now secured with password protection.

4.1.7.4 View the settings template

Once all necessary settings are specified for viewing, users are able to view the settings template on the online device or settings file. There are two ways to specify the settings view with the settings template feature:

- Display only those settings available for editing
- Display all settings, with settings not available for editing greyed-out

To display settings available for editing:

1. Right-click the device in the Online or Offline Window area and apply the template by selecting the **Template Mode >**

View In Template Mode option.

2. Enter the template password if prompted, then click **OK** to apply the template.

Once the template has been applied, users are limited to view and edit the settings specified by the template. The effect of applying the template to the phase time overcurrent settings is shown.

Figure 4-7: Applying templates using the View in Template Mode command

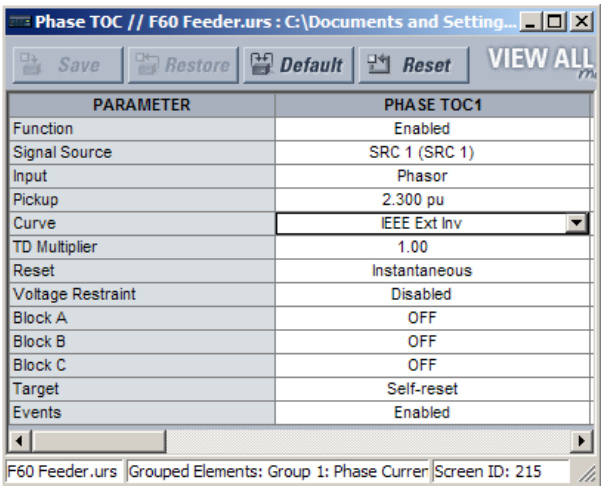

Phase time overcurrent settings window without template applied.

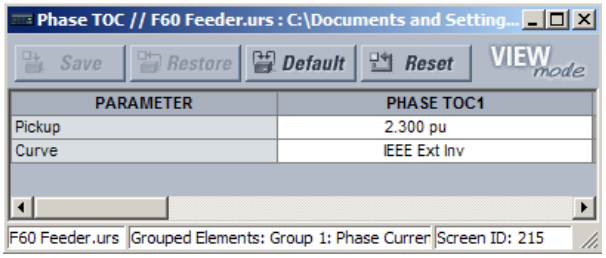

Phase time overcurrent window with template applied via the **Template Mode > View In Template Mode** command. The template specifies that only the Pickup and Curve settings be available.

842858A1.CDR

Viewing the settings in template mode also modifies the settings menu, showing only the settings categories that contain editable settings. The effect of applying the template to a typical settings menu is shown as follows.

Figure 4-8: Applying templates using the View in Template Mode settings command

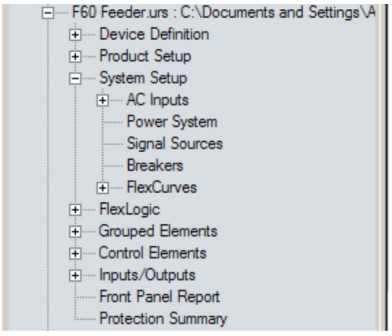

Typical settings tree view without template applied.

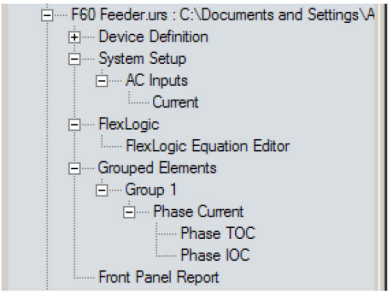

Typical settings tree view with template applied via the **Template Mode > View In Template Mode** command.

842860A1.CDR

To display settings available for editing and settings locked by the template:

1. Right-click the device in the Online or Offline Window area and apply the template by selecting the **Template Mode > View All Settings** option.
2. Enter the template password then click **OK** to apply the template.

Once the template has been applied, users are limited to edit the settings specified by the template, but all settings are shown. The effect of applying the template to the phase time overcurrent settings is shown as follows.

Figure 4-9: Applying templates using the View All Settings command

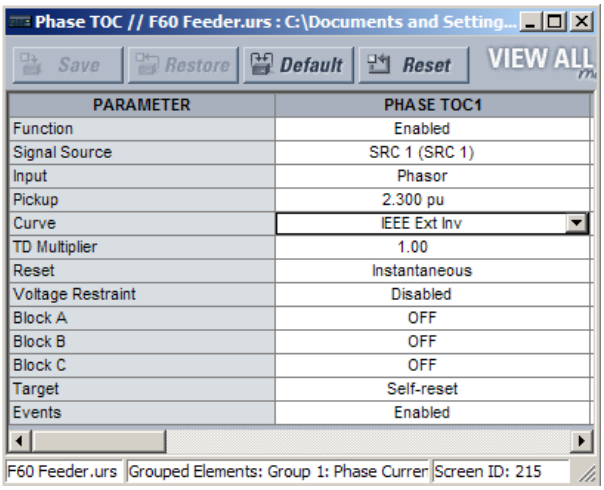

Phase time overcurrent settings window without template applied.

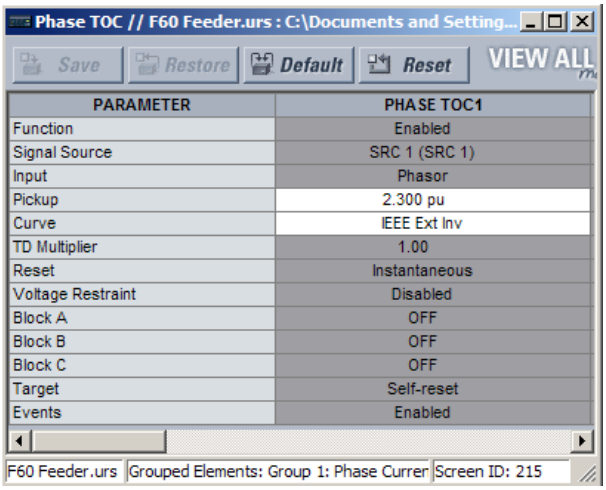

Phase time overcurrent window with template applied via the **Template Mode > View All Settings** command. The template specifies that only the Pickup and Curve settings be available.

842859A1.CDR

4

4.1.7.5 Remove the settings template

Once a settings template is removed, it cannot be reapplied and a new settings template needs to be defined before use.

1. Right-click the device in the Online or Offline Window area and select the **Template Mode > Remove Template** option.
2. Enter the template password if prompted and click **OK** to continue.
3. Confirm that you want to remove the template by clicking **Yes**.

The EnerVista software removes all template information and all settings are available.

4.1.8 Secure and lock FlexLogic equations

The UR allows users to secure some or all FlexLogic equations, preventing unauthorized viewing or modification of critical FlexLogic applications. This is accomplished using the settings template feature to lock individual entries within FlexLogic equations.

Secured FlexLogic equations remain secure when files are sent to and retrieved from any UR-series device.

Locking can be tied to the serial number too.

4.1.8.1 Lock FlexLogic equations

To lock individual entries of a FlexLogic equation:

1. Right-click the settings file or online device and select the **Template Mode > Create Template** item to enable the settings template feature.
2. If prompted, enter the template password.
3. Select the **FlexLogic > FlexLogic Equation Editor** settings menu item.

   By default, all FlexLogic entries are specified as viewable and display against a yellow background. The icon on the upper right of the window also indicates that EnerVista UR Setup is in **EDIT mode**.
4. Specify the entries to lock by clicking them.

   The locked entries display a grey background as shown in the example.

Figure 4-10: Locking FlexLogic equation entries in Edit Mode

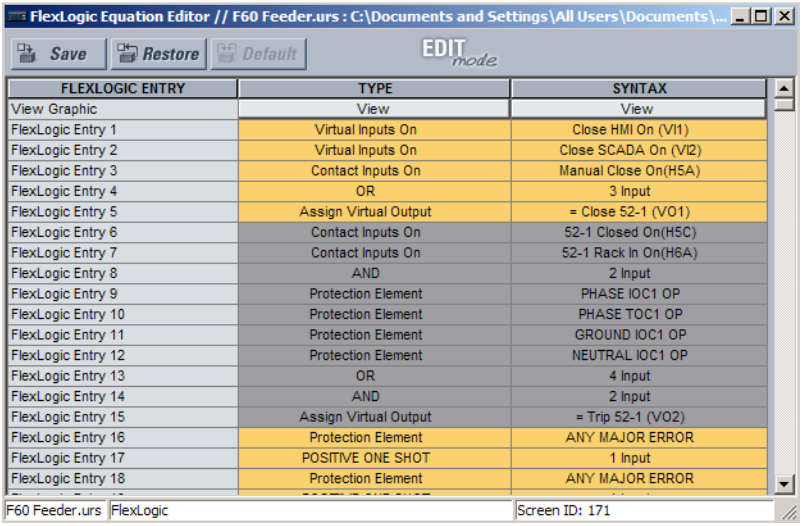

FLEXLOGIC ENTRY	TYPE	SYNTAX
View Graphic	View	View
FlexLogic Entry 1	Virtual Inputs On	Close HMI On (VI1)
FlexLogic Entry 2	Virtual Inputs On	Close SCADA On (VI2)
FlexLogic Entry 3	Contact Inputs On	Manual Close On(H5A)
FlexLogic Entry 4	OR	3 Input
FlexLogic Entry 5	Assign Virtual Output	= Close 52-1 (VO1)
FlexLogic Entry 6	Contact Inputs On	52-1 Closed On(H5C)
FlexLogic Entry 7	Contact Inputs On	52-1 Rack In On(H6A)
FlexLogic Entry 8	AND	2 Input
FlexLogic Entry 9	Protection Element	PHASE IOC1 OP
FlexLogic Entry 10	Protection Element	PHASE TOC1 OP
FlexLogic Entry 11	Protection Element	GROUND IOC1 OP
FlexLogic Entry 12	Protection Element	NEUTRAL IOC1 OP
FlexLogic Entry 13	OR	4 Input
FlexLogic Entry 14	AND	2 Input
FlexLogic Entry 15	Assign Virtual Output	= Trip 52-1 (VO2)
FlexLogic Entry 16	Protection Element	ANY MAJOR ERROR
FlexLogic Entry 17	POSITIVE ONE SHOT	1 Input
FlexLogic Entry 18	Protection Element	ANY MAJOR ERROR

5. Click the **Save** button to save and apply changes to the settings template.
6. Select the **Template Mode > View In Template Mode** option to view the template.
7. Optionally apply a password to the template by right-clicking the device and selecting the **Template Mode > Password Protect Template** option.

Once the template has been applied, users are limited to view and edit the FlexLogic entries not locked by the template. The effect of applying the template to the FlexLogic entries is shown here.

Figure 4-11: Locking FlexLogic entries through settings templates

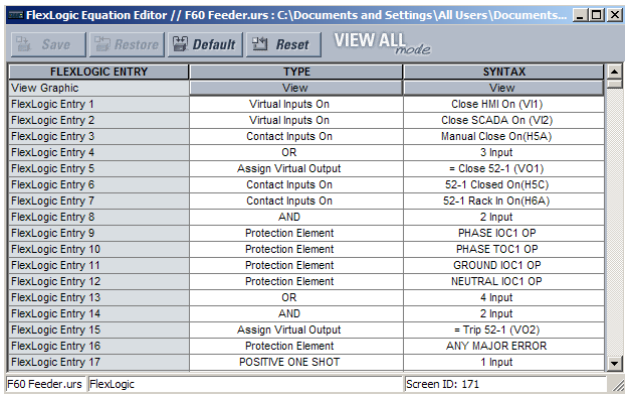

FLEXLOGIC ENTRY	TYPE	SYNTAX
View Graphic	View	View
FlexLogic Entry 1	Virtual Inputs On	Close HMI On (VI1)
FlexLogic Entry 2	Virtual Inputs On	Close SCADA On (VI2)
FlexLogic Entry 3	Contact Inputs On	Manual Close On(H5A)
FlexLogic Entry 4	OR	3 Input
FlexLogic Entry 5	Assign Virtual Output	= Close 52-1 (VO1)
FlexLogic Entry 6	Contact Inputs On	52-1 Closed On(H5C)
FlexLogic Entry 7	Contact Inputs On	52-1 Rack In On(H6A)
FlexLogic Entry 8	AND	2 Input
FlexLogic Entry 9	Protection Element	PHASE IOC1 OP
FlexLogic Entry 10	Protection Element	PHASE TOC1 OP
FlexLogic Entry 11	Protection Element	GROUND IOC1 OP
FlexLogic Entry 12	Protection Element	NEUTRAL IOC1 OP
FlexLogic Entry 13	OR	4 Input
FlexLogic Entry 14	AND	2 Input
FlexLogic Entry 15	Assign Virtual Output	= Trip 52-1 (VO2)
FlexLogic Entry 16	Protection Element	ANY MAJOR ERROR
FlexLogic Entry 17	POSITIVE ONE SHOT	1 Input

Typical FlexLogic™ entries without template applied.

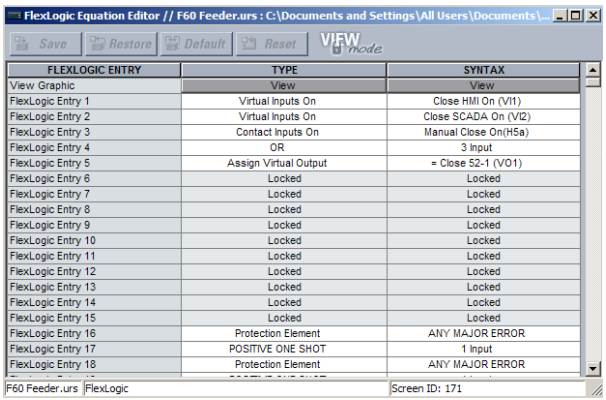

FLEXLOGIC ENTRY	TYPE	SYNTAX
View Graphic	View	View
FlexLogic Entry 1	Virtual Inputs On	Close HMI On (VI1)
FlexLogic Entry 2	Virtual Inputs On	Close SCADA On (VI2)
FlexLogic Entry 3	Contact Inputs On	Manual Close On(H5a)
FlexLogic Entry 4	OR	3 Input
FlexLogic Entry 5	Assign Virtual Output	= Close 52-1 (VO1)
FlexLogic Entry 6	Locked	Locked
FlexLogic Entry 7	Locked	Locked
FlexLogic Entry 8	Locked	Locked
FlexLogic Entry 9	Locked	Locked
FlexLogic Entry 10	Locked	Locked
FlexLogic Entry 11	Locked	Locked
FlexLogic Entry 12	Locked	Locked
FlexLogic Entry 13	Locked	Locked
FlexLogic Entry 14	Locked	Locked
FlexLogic Entry 15	Locked	Locked
FlexLogic Entry 16	Protection Element	ANY MAJOR ERROR
FlexLogic Entry 17	POSITIVE ONE SHOT	1 Input
FlexLogic Entry 18	Protection Element	ANY MAJOR ERROR

Typical FlexLogic™ entries locked with template via the **Template Mode > View In Template Mode** command.

842861A1.CDR

The FlexLogic entries are also shown as locked in the graphical view and on the front panel display.

Figure 4-12: Secured FlexLogic in graphical view

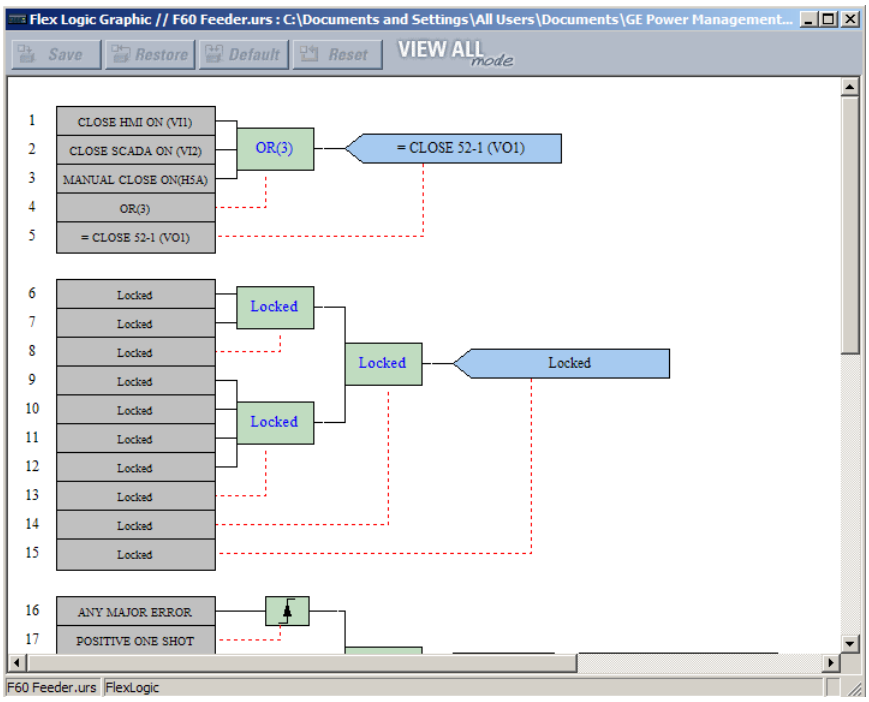

4.1.8.2 Lock FlexLogic equations to the serial number

A settings file and associated FlexLogic equations also can be locked to a UR serial number. Once FlexLogic entries in a settings file have been secured, use the following procedure to lock the settings file to a serial number. A serial number is viewable under **Actual Values > Product Info > Model Information**, the inside front panel, and the rear of the device.

1. Right-click the setting file in the Offline Window area and select the **Edit Device Properties** item. The window opens.

Figure 4-13: Settings file properties window

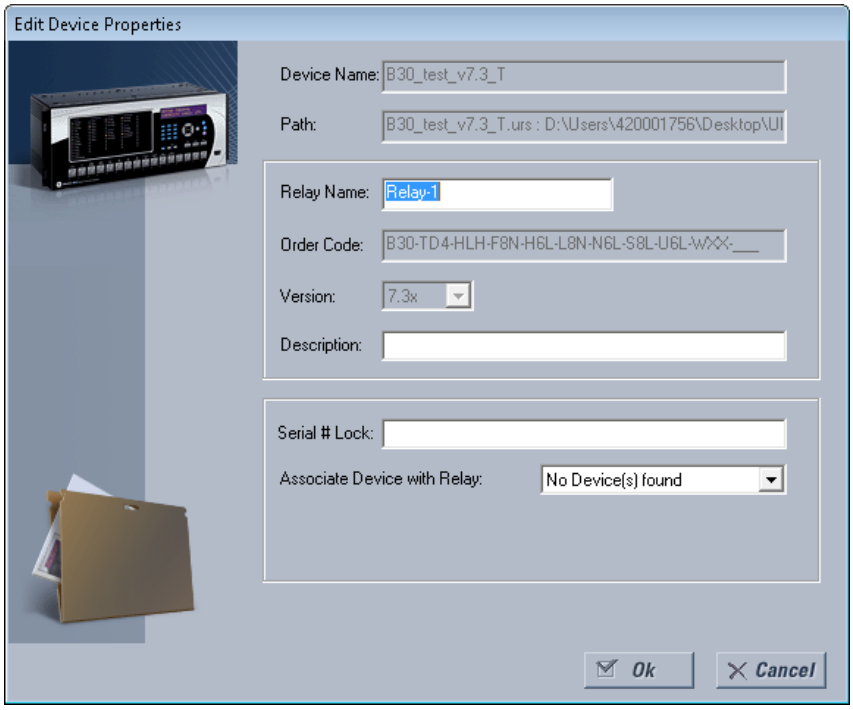

2. Enter the serial number of the N60 device to lock to the settings file in the **Serial # Lock** field.
3. Click the **OK** button to apply the change. The serial number is not validated.

The settings file and corresponding secure FlexLogic equations are now locked to the N60 device specified by the serial number.

4.1.9 Settings file traceability

A traceability feature for settings files allows the user to quickly determine if the settings in a N60 device have been changed since the time of installation from a settings file. When a settings file is transferred to a N60 device, the date, time, and serial number of the N60 are sent back to EnerVista UR Setup and added to the settings file on the local computer. This information can be compared with the N60 actual values at any later date to determine if security has been compromised.

The traceability information is only included in the settings file if a complete settings file is either transferred to the N60 device or obtained from the N60 device. Any partial settings transfers by way of drag and drop do not add the traceability information to the settings file.

Figure 4-14: Settings file traceability

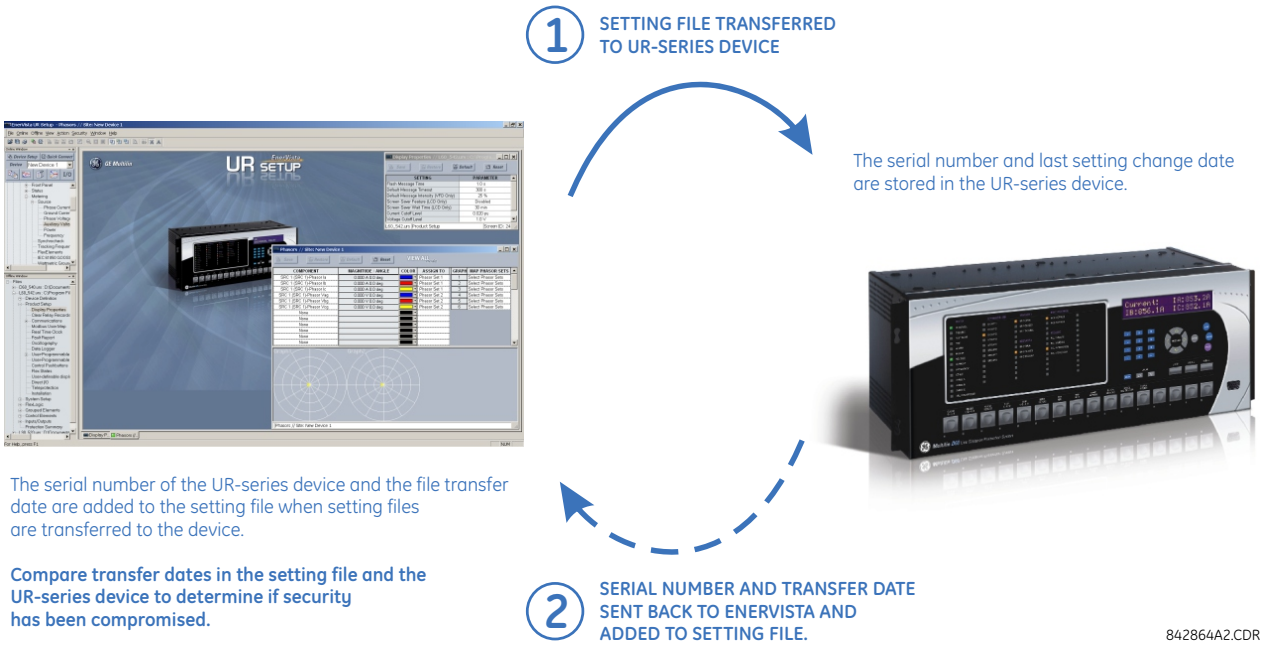

With respect to the figure, the traceability feature is used as follows.

- The transfer date of a settings file written to a N60 is logged in the relay and can be viewed in the EnerVista software or the front panel display. Likewise, the transfer date of a settings file saved to a local computer is logged in the EnerVista software.
- Comparing the dates stored in the relay and on the settings file at any time in the future indicates if any changes have been made to the relay configuration since the settings file was saved.

4.1.9.1 Settings file traceability information

The serial number and file transfer date are saved in the settings files when they are sent to a N60 device.

The N60 serial number and file transfer date are included in the settings file device definition within the EnerVista UR Setup offline window as shown in the example.

Figure 4-15: Device definition showing traceability data

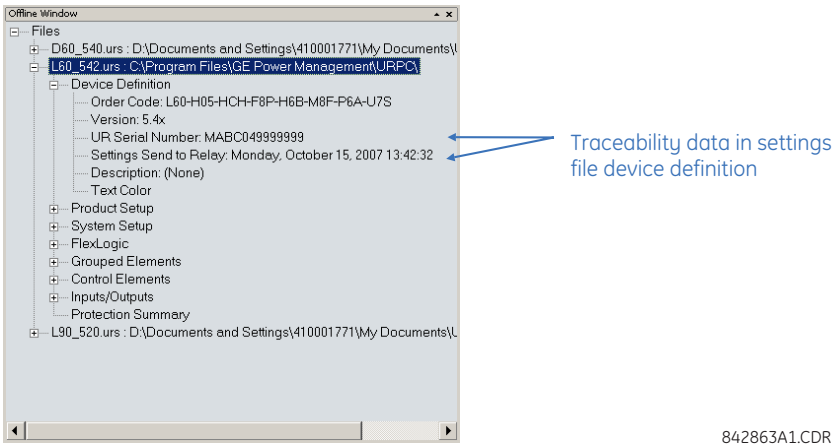

This information is also available in printed settings file reports as shown in the example. A report is generated by right-clicking and selecting the **Print Settings** option.

Figure 4-16: Settings file report showing traceability data

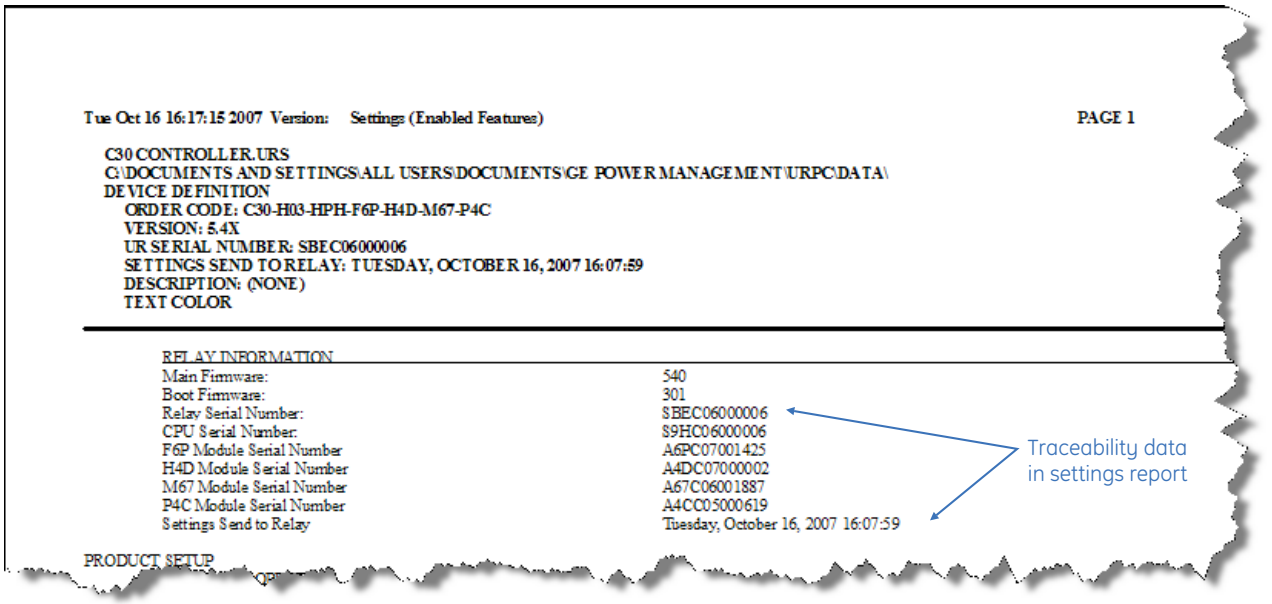

4.1.9.2 Online device traceability information

The N60 serial number and file transfer date are available for an online device through the actual values. Select the **Actual Values > Product Info > Model Information** menu item within the EnerVista online window as shown in the example.

Figure 4-17: Traceability data in Actual Values window

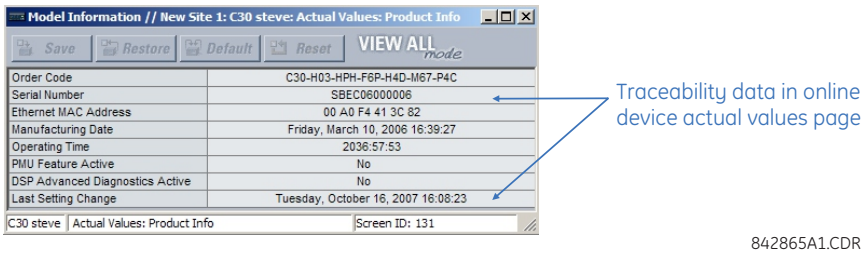

This information is also available from the front panel display through the following actual values:

ACTUAL VALUES ⇨⇩ PRODUCT INFO ⇨ MODEL INFORMATION ⇨⇩ SERIAL NUMBER

ACTUAL VALUES ⇨⇩ PRODUCT INFO ⇨ MODEL INFORMATION ⇨⇩ LAST SETTING CHANGE

4.1.9.3 Additional traceability rules

The following additional rules apply for the traceability feature:

- If the user changes any settings within the settings file in the offline window, then the traceability information is removed from the settings file
- If the user creates a new settings file, then no traceability information is included in the settings file
- If the user converts an existing settings file to another revision, then any existing traceability information is removed from the settings file
- If the user duplicates an existing settings file, then any traceability information is transferred to the duplicate settings file

4.2 Front panel interface

This section explains use of the enhanced, basic, and graphical front panels.

4.2.1 Front panel

4.2.1.1 Enhanced front panel

The enhanced front panel consists of LED panels, an RS232 port, keypad, LCD display, control pushbuttons, and optional user-programmable pushbuttons.

The front panel is hinged to allow access to removable modules inside the chassis. The N60 enhanced front panel can be horizontal. The following figure shows the horizontal front panel.

Figure 4-18: Enhanced horizontal front panel

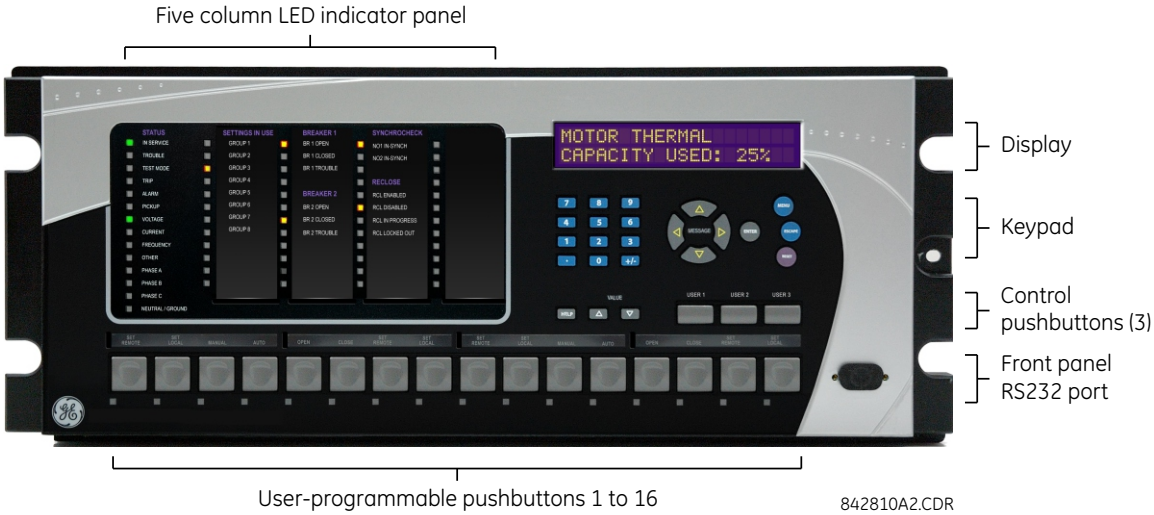

4.2.1.2 Basic front panel

The basic front panel consists of LED panels, an RS232 port, keypad, LCD display, control pushbuttons, and optional user-programmable pushbuttons.

The front panel is hinged to allow easy access to removable modules inside the chassis. There is also a removable dust cover that is to be removed when accessing the keypad. The N60 basic front panel can be horizontal. The following figure shows the horizontal front panel.

Figure 4-19: Basic horizontal front panel

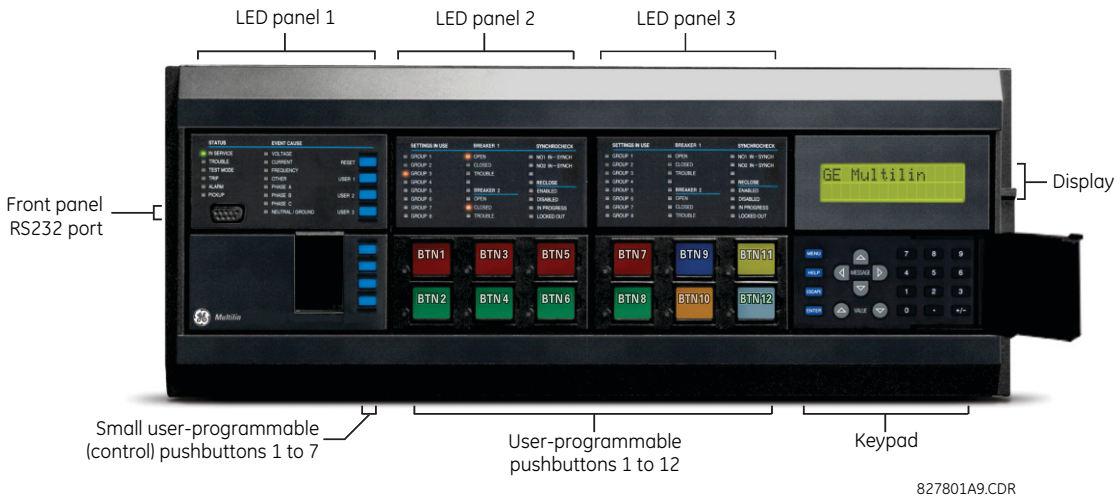

4

4.2.1.3 Graphical front panel

The graphical front panel consists of a USB port, LED panel, color screen display, user-programmable pushbuttons, and navigation keys. The screen is used to read data, such as metering actual values, alarms, self-test messages, and event records, and for viewing single-line diagrams. Settings can be changed on the front panel, except for the graphical front panel itself and for IEC 61850. The USB port connects to a computer with the EnerVista software and can be used to upgrade the relay and to transfer files and settings. The USB port is the square type B.

User-programmable pushbuttons 9 to 40 can be programmed among the 10 pushbuttons on the left and right sides of the display.

Figure 4-20: Graphical front panel

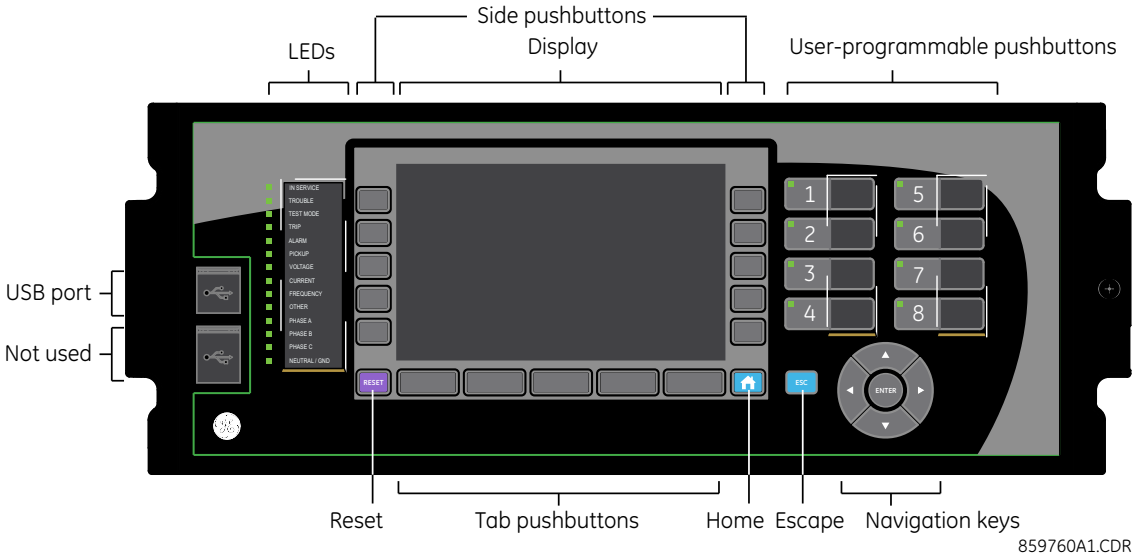

4.2.2 Front panel display

4.2.2.1 Enhanced and basic front panels

Messages display on a backlit liquid crystal display (LCD) to make them visible under poor lighting conditions. When the keypad and display are not actively being used, the display defaults to user-defined messages. Any high-priority event-driven message overrides the default messages.

Up to 20 characters can be used to configure some setting names in the software, while up to 12 characters display on the front panel. A tilde ~ symbol is used for the twelfth character on the front panel when a name extends beyond the 12 character limit. An example is shown for a Virtual Input.

Figure 4-21: Tilde symbols displays with names 12 or more characters long

4

The front panel can be viewed and used in the EnerVista software, for example to view an error message displayed on the front panel or the LEDs.

To view the front panel in EnerVista software:

1. Click **Actual Values > Front Panel**, then any option.

Figure 4-22: Front panel use in the software (C60 shown)

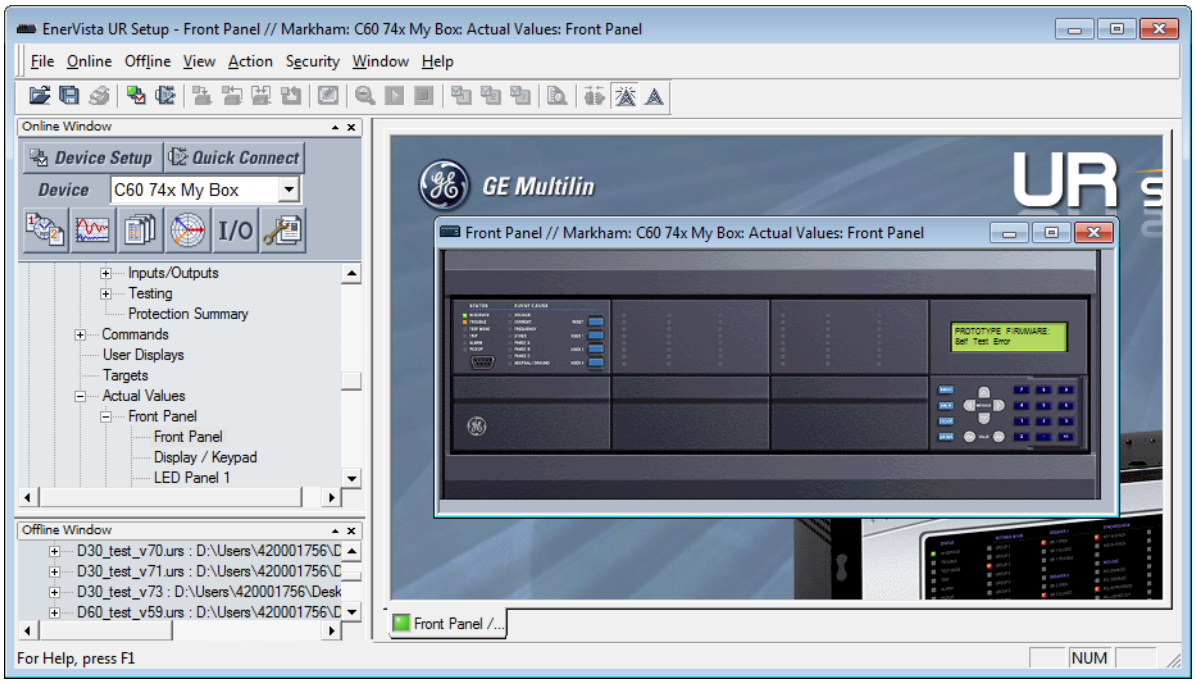

4.2.2.2 Graphical front panel

The graphical front panel has a seven-inch (17.8 cm) color liquid crystal display (LCD). The display provides convenient access to operational data generated by the relay, enables local control of power system devices, and allows display/editing of settings.

Header content varies by page. The home page displays any active icons, such as security status, active setting group, and active target messages. It shows the date and time of the relay. If the relay synchronizes to an external time source via PTP, IRIG-B, SNTP, and so on, the date/time is shown in white, and otherwise in yellow. On pages other than the home page, the header displays the name of the page.

The footer dynamically labels the Tab, or control, pushbuttons immediately below.

Page content displays between the header and footer.

Figure 4-23: Home page example with default content (product information)

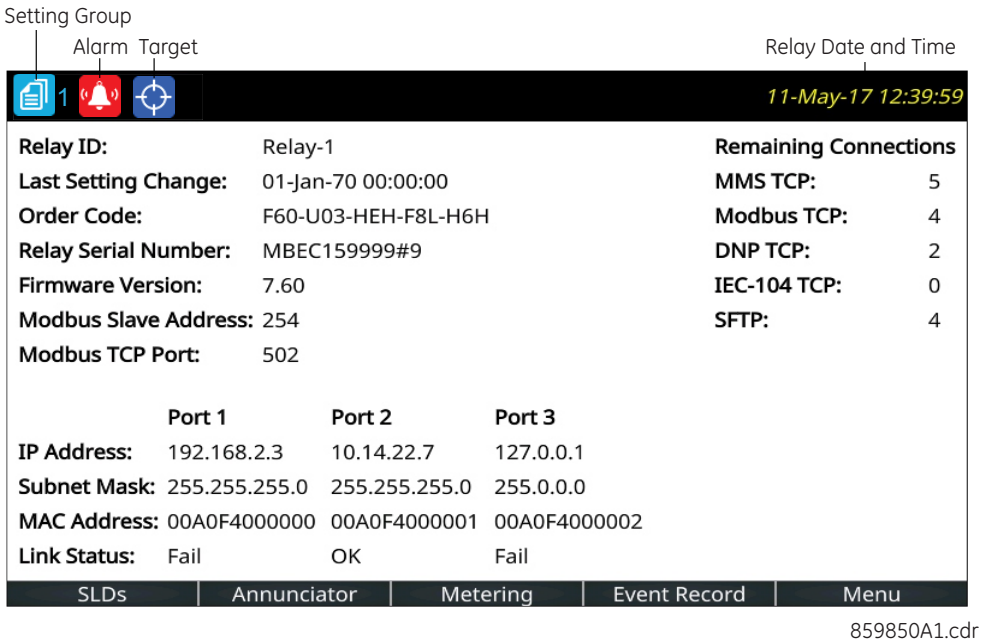

859850A1.cdr

There are multiple ways to navigate pages, by using the pushbuttons and the menu hierarchy. The menu hierarchy is similar to the other front panels whereby you select a submenu using Up and Down arrow pushbuttons, and press the **ENTER** or Right pushbutton. On setting pages, opening a setting for editing is done by highlighting the setting using Up and Down pushbuttons, and pressing the **ENTER** or Right pushbutton.

Home page

Press the **Home** pushbutton to display the root page no matter the state. Any edit, control, or password entry sessions are canceled. The header shows several relay/system status icons. The default content of the home page is the product information page and can be user-configured to show the content of any single-line diagram page, annunciator page, metering page, or event records page for example. The Tab pushbuttons on the bottom row each navigate to their page. The home page displays for a user-configured time period, then scrolls through user-configured pages, a feature referred to as rolling.

Holding the **Home** pushbutton for one second displays the product information page. The Home page also can display when settings are saved.

Security indicator, showing how many people are logged in, including local and remote users. The lock is red when one or more users are logged in and other otherwise green.
When no users are logged in because login is not required, an icon does not display.

Identifies the active setting group number (not shown)

Displays when an abnormal annunciator alarm is present. Navigate to the Annunciator for details. When there are no such alarms, the icon does not display.
Even when you acknowledge/reset an alarm, the icon displays as long as the condition remains. For example, a breaker trouble alarm displays, you acknowledge it, but the icon remains because the breaker trouble remains.

Active targets symbol, where targets are error messages.
View error messages by pressing the **Menu** Tab pushbutton, then accessing the **TARGETS** menu. Pressing the **RESET** button clears those messages that can be.

Configure the home page in the software under **Settings > Product Setup > Graphical Panel > Home Page**. The menu does not display when there is no graphical front panel.

Rolling mode

After a user-defined period of inactivity, the graphical front display rolls among up to 10 user-selected pages. The roll-to-pages are selected in the EnerVista software, with the defaults being the product information page. Each page displays for less than five seconds. Also, the display backlight intensity is lowered after a configurable period to a user-defined level (0, 10, 20, or 30%); lower intensity extends the life of the display.

Configure rolling mode in the software under **Settings > Product Setup > Graphical Panel > Rolling Mode**.

Operation works as follows:

- Press the **Home** pushbutton or **ESCAPE** pushbutton twice to cancel rolling, restore full backlight intensity, and return to the Home page
- Press the **ENTER**, **ESCAPE**, or a pushbutton to pause rolling once and restore full backlight intensity

Rolling is disabled by setting the delay to 0.

The following buttons display at the top of the window:

- **Save** — Updates the connected device if online or the open setting file if offline with changes made
- **Restore** — Undoes changes that have not been saved
- **Default** — Changes all rolling mode settings to their factory default values
- **Reset** — Displays factory default values. Previous changes are not lost unless you save the reset window.

Single-line diagrams

A single-line diagram, or mimic diagram, is a line drawing of elements in an electrical system. The graphical front panel displays up to five single-line diagrams. Each can be configured to show the arrangement of a portion of the power system, the status of circuit breakers and of ground and disconnect switches, user-programmable pushbuttons, and metering and status values. Each also enables control of the displayed breakers and switches when operand status assigned to the **Enable Controls from GFP** setting is ON.

One diagram is provided by default, single_bus_line_dsc.mif, which can be modified.

Configure the diagrams under **Settings > Product Setup > Graphical Panel > Single Line Diagram Editor**.

Each single-line diagram page has a user-configurable name that appears in the header and in the footer Tab pushbutton label. Factory default names are SLD 1 to SLD 5. Pages that have no configured content have a blank Tab pushbutton label, and the Tab pushbutton does nothing. The label for the current page has a blue background.

Figure 4-24: Toolbar options for single-line diagram

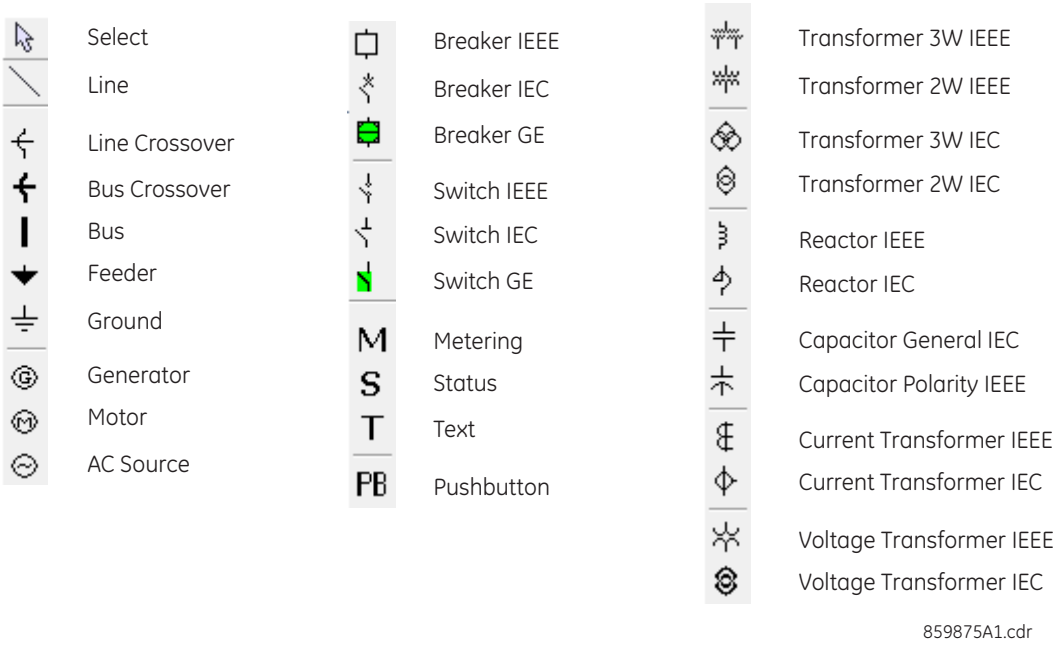

The letters T, S, B, R, and X next to a controllable element have the following meaning. An example (TSB) is shown in the next figure.

- T — The element is "tagged" (irrespective of whether it is tagged from graphical front panel or via IEC 61850). Local and remote control of the device are inhibited, both open and close. Tripping is unaffected unless additional logic has been configured.
- S — The position indication of the device is substituted with a manually entered value
- B — Blocking open/close command is bypassed
- R — Autoreclose is enabled and not blocked
- X — The device is out-of-service and control is not available

Single-line diagram example

The following example outlines how to create a circuit breaker diagram, then how to close the second circuit breaker. The figure shows six switches (SW, M), two breakers (CB), feeder (arrow), and ground (lined arrow).

Figure 4-25: Single-line diagram of open circuit breakers

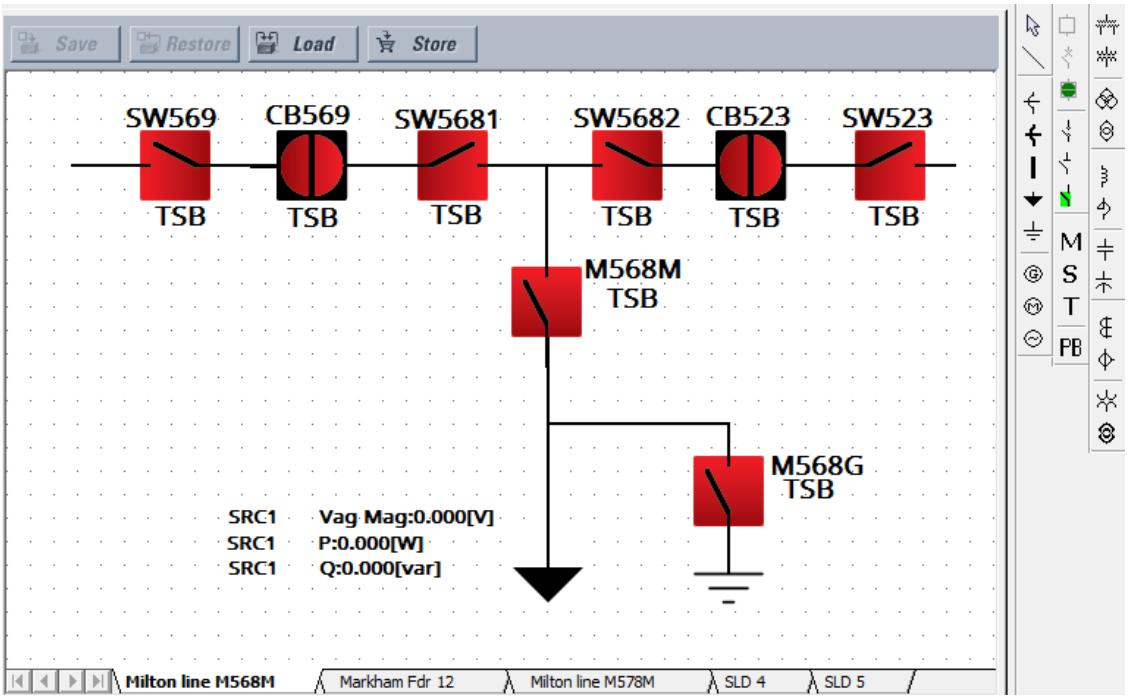

Under **Settings > System Setup > Switches** and **Breakers**, enable and name the six switches and two breakers. Switch 6, M568G, has the A/3 Pole Opened setting on.

Figure 4-26: Configure Breaker and Switch settings

Save | Restore | Default | Reset | VIEW ALL mode

SETTING	PARAMETER
Switch 1 Function	Enabled
Switch 1 Name	SW569
Switch 1 Mode	3-Pole
Switch 1 Open	OFF
Switch 1 Block Open	OFF
Switch 1 Close	OFF
Switch 1 Block Close	OFF
Switch 1 Phase A/3 Pole Closed	ON
Switch 1 Phase A/3 Pole Opened	OFF
Switch 1 Phase B Closed	OFF

Switch 6 Function	Enabled
Switch 6 Name	M568G
Switch 6 Mode	3-Pole
Switch 6 Open	OFF
Switch 6 Block Open	OFF
Switch 6 Close	OFF
Switch 6 Block Close	OFF
Switch 6 Phase A/3 Pole Closed	OFF
Switch 6 Phase A/3 Pole Opened	ON
Switch 6 Phase B Closed	OFF
Switch 6 Phase B Opened	OFF

Save | Restore | Default | Reset | VIEW ALL mode

SETTING	PARAMETER
Breaker 1 Function	Enabled
Breaker 1 Push Button Control	Enabled
Breaker 1 Tagging	Enabled
Breaker 1 Substitution	Enabled
Breaker 1 Bypass	Enabled
Breaker 1 AR Block	Enabled
Breaker 1 Name	CB569
Breaker 1 Mode	3-Pole
Breaker 1 Open	OFF
Breaker 1 Block Open	OFF
Breaker 1 Close	OFF
Breaker 1 Block Close	OFF
Breaker 1 Phase A/3-Pole Closed	ON
Breaker 1 Phase A/3-Pole Opened	OFF
Breaker 1 Phase B Closed	OFF

In the EnerVista software, open the single-line diagram editor under **Settings > Product Setup > Graphical Panel > Single Line Diagram Editor**.

Add the four switches for the top line by clicking the GE switch symbol in the toolbar, then clicking in the window. (If the UR device is not online, the software attempts to connect.) Right-click to edit properties. Rotate switches SW569 and SW5682 to 270 degrees. Rotate switches 5681 and SW523 to 90 degrees. Ignore the TSB text.

Add the two lower switches. Leave rotation at 0 degrees.

Add the two breakers by clicking the GE breaker symbol in the toolbar, then click in the window. Right-click to edit properties, rotating 90 degrees and setting the color to red (open).

Draw lines to fill in the gaps between the switches and breakers by clicking the line symbol in the toolbar, then clicking and dragging on the canvas to draw a line. Do not draw a single line for the top line, but instead draw several small lines.

Add the feeder arrow head by clicking the symbol in the toolbar, then clicking the end of the line.

Add the ground symbol by clicking the symbol in the toolbar, then clicking the end of the line.

Add three metered values by clicking the M symbol in the toolbar, then clicking near the feeder arrow. Double-click to edit. The three metered values are SRC1 Vag Mag, SRC 1 P, and SRC 1 Q.

Name the page by right-clicking the bottom tab. Here, page 1 is renamed "Milton line M568M."

Note that active symbols in the toolbar display and those that are inactive are greyed-out.

The diagram has been created. Save it by clicking the **Save** button.

Next is to close circuit breaker CB523. This circuit breaker is shown at the top right of the figure. A vertical line means that it is open, and the color can be set as red or green.

On the graphical front panel, press the **Home** pushbutton, then press the **SLDs** pushbutton to activate the first single-line diagram page.

Figure 4-27: Single-line diagram on graphical front panel

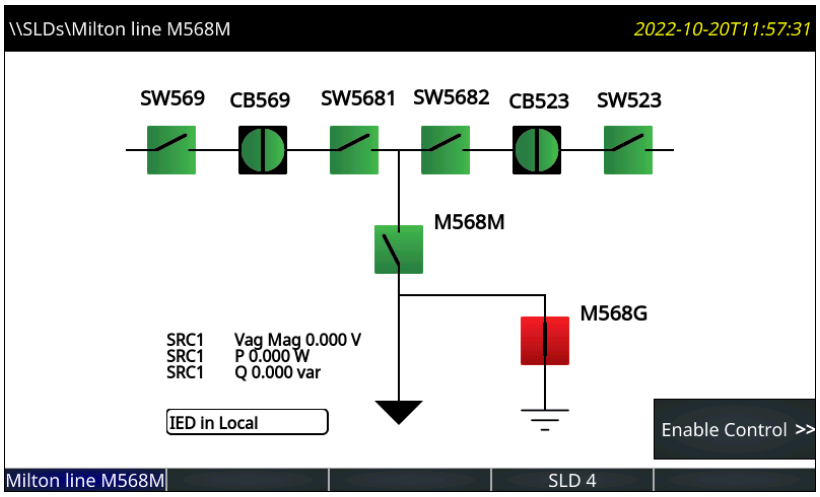

Press the **Enable Control** pushbutton, which displays when the **Settings > Product Setup > Graphical Panel > Home Page > Enable Controls From GFP** setting is configured and its FlexLogic operand is ON. The side pushbutton labels display.

Figure 4-28: Side pushbutton display on graphical front panel

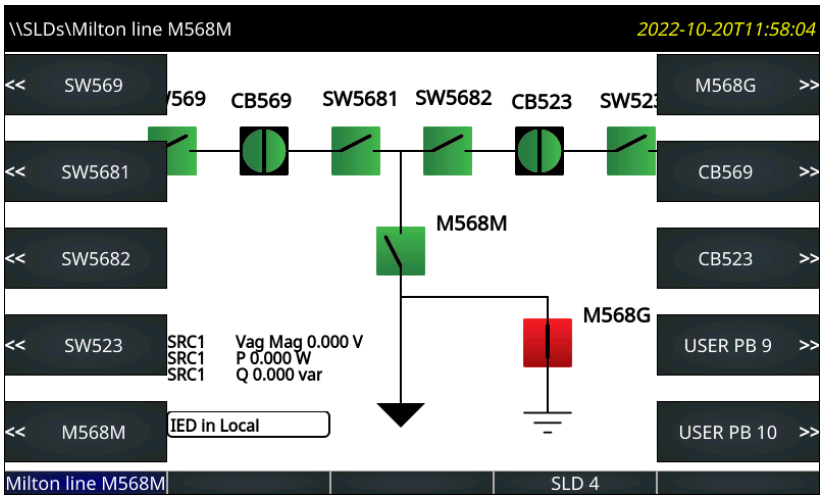

Press the **CB523** breaker pushbutton. Its menu displays.

Figure 4-29: Pushbuttons to control the breaker

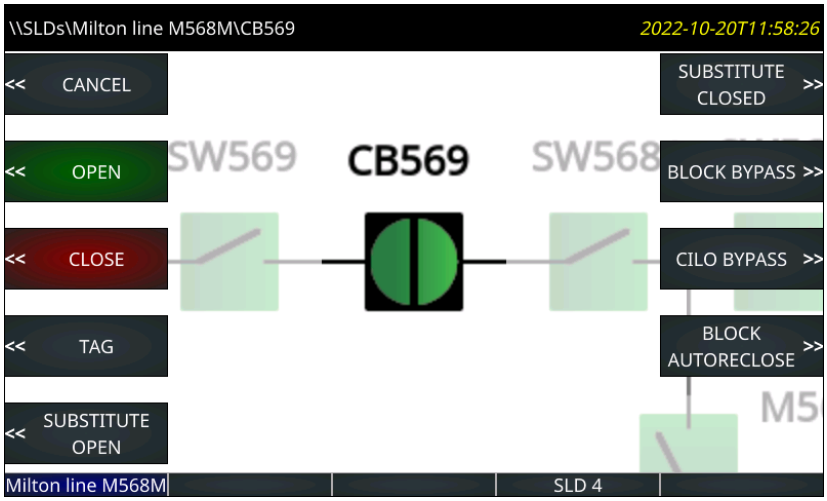

Press the pushbutton to close the breaker, confirming the action at the prompt.

NOTE

If at the prompt the control action is prevented this is because status of the operand assigned to the **Enable Controls From GFP** setting has changed back to OFF before confirming the prompt action. As a result, the command is not issued, and the screen goes to the top SLD page.

In this diagram, the two circuit breakers have hard-coded actions available to them. No action is possible on the switches.

Note the USER PB 9 and 10 entries in the earlier figure. As outlined later, these are activated by clicking the PB icon on the software toolbar. These two pushbuttons can be configured under **Settings > Product Setup > User-Programmable Pushbuttons**.

When a breaker is tagged, the letter T displays under the breaker in the diagram. The **Tag** pushbutton shown toggles to **Remove Tag**.

Single-line diagram editor use

Start the application in the EnerVista software under **Settings > Product Setup > Graphical Panel > Single Line Diagram Editor**.

The following buttons display at the top of the window:

- **Save** — Updates the connected device if online or the open setting file if offline with changes made
- **Restore** — Undoes changes that have not been saved
- **Load** — Opens single-line diagram files, which replaces one or all windows with that in the file selected
- **Store** — Saves all single-line diagrams as a .mif file. Because single-line diagrams are not retained when using the **Convert Device Settings** function, for example when converting in the Offline Window area from version 7.6 to 7.7, GE recommends making backup files using this function.

On the right side of the window is a toolbox containing the components that can be added to the window. These include line, breaker, disconnect, metering value, status value, text, and miscellaneous power system elements. To create the single-line diagram, click the symbol, then click in the window. Once in the window, the component can be positioned and its properties modified. When using the pointing device to position a component, the component can snap to the nearest snap point. Snap points are in a 4 x 4 rectangular grid. The keyboard arrow keys move the selected component(s) in one pixel increments when snap locations are inadequate. Multiple components can be selected and moved or deleted as a group, or copied and pasted to another location. Right- or double-clicking a component opens the properties window.

Ctrl+A selects all objects in a diagram.

Lines

Line components represent power system buses or electrical connections between power system elements. They can also be used as visual dividers and underline.

To add a line component, click it in the toolbox, then click in the window. Double-click a line to open its properties window to set orientation.

Figure 4-30: Line and bus crossover symbols

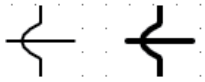

Static symbols

Static symbols depicting power system elements are available. For information, see the ANSI/IEEE 315A and IEC 60617 standards.

Up to 32 static symbols can be used per single-line diagram.

To add a symbol, click it in the toolbox, then click in the window. Double-click the symbol to open its properties window to set orientation.

Figure 4-31: IEEE and IEC static symbols

Device	Symbols
3W Transformer	
2W Transformer	
Rotating machines	G M ~
Reactor	
Ground	
Connector, Bus, Feeder, Crossover	
CT	
VT / PT	
Capacitor	

Breaker and disconnect components

Breaker components and disconnect components are interfaces to the UR breaker control elements and disconnect switch elements. On a UR device they show dynamically the breaker or disconnect status as calculated by the element, and provide means to open, close, tag, bypass interlock, and substitute (force status of) the element. Breaker components in addition provide means to enable/disable breaker autoreclose.

Each breaker and disconnect component can be configured to use UR-style symbols, IEC symbols, or simple square/slash symbols as shown in the following figure. The symbols assume horizontal symbol orientation, red - closed color, and green - open scheme. With vertical orientation, they are rotated 90 degrees.

Figure 4-32: Single-line diagram symbols

	IEEE style (IEEE 315)	IEC Style (IEC 60617)	GE Style
Disconnect Switch (Open)			(1)
Disconnect Switch (Intermediate)			
Disconnect Switch (Closed)			(1)
Disconnect Switch (Bad Status/Disabled)	?	?	?
Breaker (Open)			(1)
Breaker (Closed)			(1)
Breaker (Bad Status/Disabled)	?	?	?
Breaker racked-out (Open)			(1)
Breaker racked-out (Closed)			(1)
Breaker racked-out (Bad Status)	?	?	?
Breaker racked-in (Open)			(1)
Breaker racked-in (Closed)			(1)
Breaker racked-in (Bad Status)	?	?	?

(1) Red/Green color scheme for closed/open is configurable by the user.
(2) 3-position disconnect switches can be represented by grouping two 2-position disconnects switches.

To add a breaker or disconnect component, click it in the toolbox, then click in the window. Up to 10 dynamic components can be added to each single-line diagram.

Breaker and disconnect components have three different parts: label, symbol, and flags. Drag each of its parts to their final locations. Double or right-click any of these parts to open the properties window. Properties that can be edited are label text, breaker control element or disconnect switch element number, symbol orientation (horizontal or vertical), color scheme (red - closed, or red - open), and assigned side button (if any). If the selected breaker or disconnect element does not exist in the target relay or has not been enabled, then the component is displayed in the graphical front panel and in the drawing edit window in grey. The color scheme selection has no effect when an IEC style symbol is used because IEC style symbols do not use color.

4

Symbol orientation

The figure shows the orientation available for the breaker and disconnect switch (taking Open status as examples). The default position is 0 degrees.

Figure 4-33: Single-line diagram symbol orientation

		0 degree	90 degrees	180 degrees	270 degrees
IEEE Style	Disconnect Switch (Open)				
	Breaker (Open)				
IEC Style	Disconnect Switch (Open)				
	Breaker (Open)				
GE Style	Disconnect Switch (Open)				
	Breaker (Open)				

A question mark displays in a symbol on the graphical front panel when status is bad. The question mark does not rotate with orientation.

Figure 4-34: Symbols when status is bad

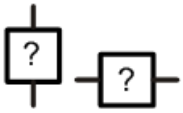

The following figures show the orientation available for the static components. The default position is 0 degrees.

Figure 4-35: Single-line diagram static symbol orientation (sheet 1 of 2)

	0 degree	90 degrees	180 degrees	270 degrees
3W Transformer	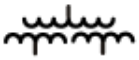			
2W Transformer			0 degree	90 degrees
3W Transformer				
2W Transformer			0 degree	90 degrees
Rotating machines		0 degree	0 degree	0 degree
Reactor			0 degree	90 degrees
Reactor				
Capacitor				
Capacitor			0 degree	90 degrees

Figure 4-36: Single-line diagram static symbol orientation (sheet 2 of 2)

	0 degree	90 degrees	180 degrees	270 degrees
Ground				
Connector			0 degree	90 degrees
Bus			0 degree	90 degrees
Feeder				
Crossover			0 degree	90 degrees
CT				
CT				
VT / PT			0 degree	90 degrees
VT / PT			0 degree	90 degrees

User-programmable pushbuttons

User-programmable pushbuttons 1 to 8 are physical pushbuttons on the right side of the graphical front panel, numbering down the two columns.

Any remaining user-programmable pushbuttons are programmed among the 10 pushbuttons on the left and right sides of the screen display. They show dynamically and provide a means to perform the same control as the other pushbuttons.

Figure 4-37: Assigning pushbuttons to the display

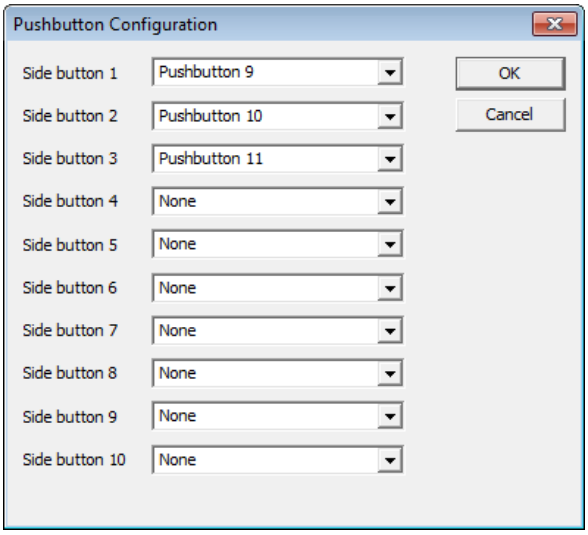

As an example, if you set up a single-line diagram with two breakers and six switches, then eight of the side pushbuttons are used automatically for control of the breakers and switches. Side pushbuttons 9 and 10 are available. In the single-line diagram, let us set side pushbutton 9 to clear event records as follows:

- Show side pushbutton 9 on the graphical front panel — Click the PB symbol in the toolbar, then set **Side button 9** to pushbutton 9 in the drop-down list. This pushbutton then displays when appropriate on the right side of the screen display.
- Program event record clearing — Set **Settings > Product Setup > Clear Relay Records > Clear Event Records** to FlexLogic operand PUSHBUTTON 9 ON
- Program pushbutton 9 — Set **Settings > Product Setup > User-Programmable Pushbuttons > Pushbutton 9 Function** to "Self-reset." When pressed, pushbutton 9 clears the event records.

To instead set the second user pushbutton (not a side pushbutton) to clear events, follow the second and third bullet points, selecting settings of PUSHBUTTON 2 ON and Pushbutton 2.

Metering components

Metering components show dynamically the value of a FlexAnalog operand or actual value. Up to 16 metering components can be added to each single-line diagram.

To add a metering component, click the M symbol in the toolbox, then click in the window. Drag it to its final location. Double-click it to open the properties window. The figure shows the properties that can be edited.

Figure 4-38: Metering properties

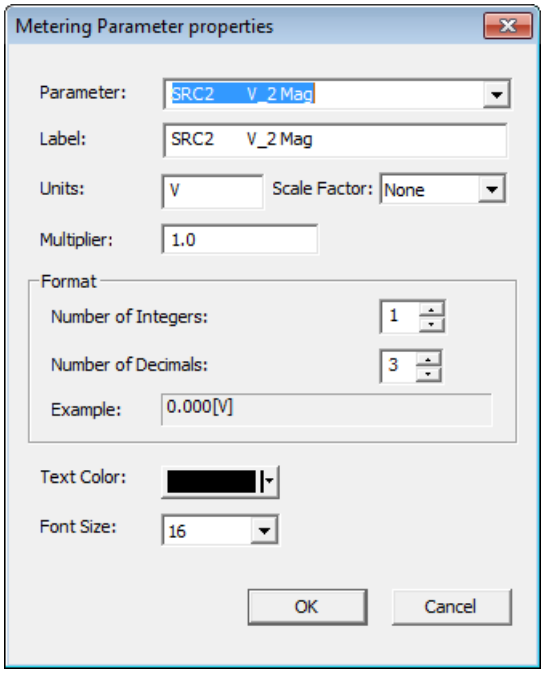

4

Status components

Status components show dynamically the value of a FlexLogic operand. Up to 16 can be used in a diagram and 30 in all single-line diagrams.

An example is to show the Off or On state of the ANY MAJOR ERROR FlexLogic operand. The name of the operand displays in the single-line diagram editor, then as Off or On on the graphical front panel.

To add a status component, click the S symbol in the toolbox, then click in the window. Drag it to its final location. Double-click it to open the properties window. Properties that can be edited include parameter (any FlexLogic operand), text color background color, and on and off text.

Optionally add a text label to display beside the status.

Text

Text components show a single line of user-configured text.

Up to 16 text components can be used per single-line diagram.

To add a text component, click the T symbol in the toolbox, then click in the window. Drag it to its final location. Double-click it to open the properties window. Properties that can be edited are text, color, and size.

Annunciator

An annunciator is a grid of small windows for alarms, actual values, self-test messages, and product information.

The graphical front panel emulates a conventional annunciator panel. The annunciator has 96 windows, each with a description of the alarm condition that lights the window. The windows are arranged in rows and columns of 3 x 4, 4 x 6, or 6 x 8 over several pages. Each window can have up to three lines of configurable text, and one line can instead be a metered value. Normally the window background is dark, and when the configured FlexLogic operand becomes On, the window lights up.

The figure shows that two alarms are active. One alarm is configured red and the other alarm is configured blue. The red alarm type is Self Reset, so the alarm displays in a solid color. The blue alarm type is Acknowledgeable, so the alarm flashes until it is acknowledged, for example by navigating with the arrow keys and pressing the **ENTER** button. The alarm then remains blue until the trigger condition is eliminated.

Figure 4-39: 3x4 annunciator page with two active windows

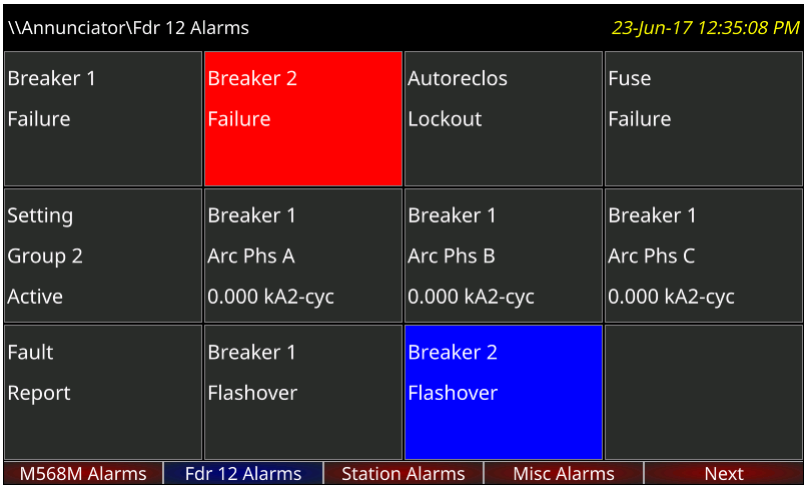

To display the annunciator, press the **Home** pushbutton, then the **Annunciator** Tab pushbutton. If there is one or more window in alarm or requiring reset, the annunciator page showing the first of these opens. Otherwise the first annunciator page opens.

Alarms do not display automatically. Set the Home page and/or rolling pages to display annunciator pages.

The Tab pushbutton labels populate with the annunciator pages. The label text for each annunciator page is configurable and displays in the header and Tab label. The current page has a blue Tab label. Tab labels for annunciator pages that have an active window (that is, on, latched, or unacknowledged) are red. Pages where alarms are not triggered have a grey Tab label. Pages that have no configured windows do not have Tab pushbuttons and do not display.

The Up, Down, Left, and Right pushbuttons cause the selection to move one window in the indicated direction. Pressing the Right pushbutton past the last window in a row scrolls the display to any next annunciator page, not the next row. The behavior is similar for the other pushbuttons, for example pressing the Up pushbutton while in the top row goes to any previous page. If no previous page exists, no action occurs.

Annunciator windows are positioned statically, so that all windows are visible no matter their state.

Alarm types of each window can be configured as Self Reset, Latched, or Acknowledgeable. In Self Reset mode, the window lighting follows the state of the configured FlexLogic operand. The self-reset mode alarm sequence conforms to ISA-18.1-1979 (R2004) standard type A 4 5 6.

Figure 4-40: Annunciator alarm sequence in Self Reset mode

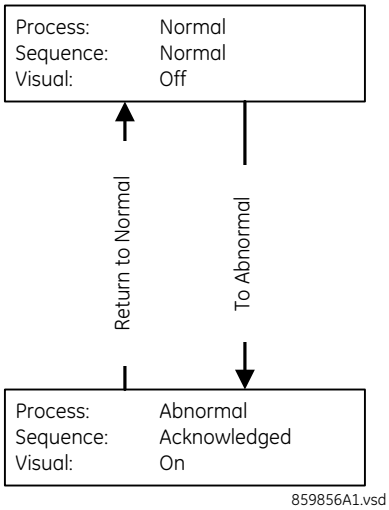

Latched mode is intended for transient signals such as trip, and it conforms to ISA-18.1-1979 (R2004) standard type M 6.

Figure 4-41: Annunciator alarm sequence in Latched mode

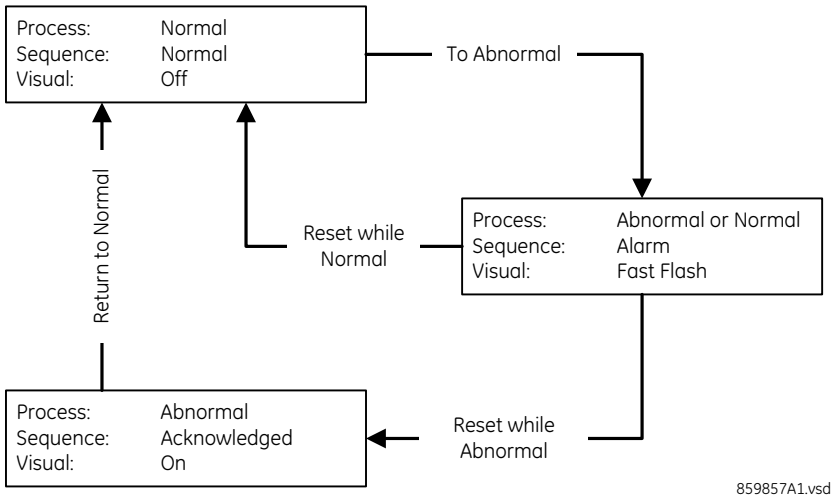

In Acknowledgeable mode, both Off to On and On to Off state changes in the configured operand cause the background to flash; the window must be acknowledged/reset to cancel flashing. This mode conforms to ISA-18.1-1979 (R2004) standard type R-6.

Figure 4-42: Annunciator alarm sequence in Acknowledgeable mode

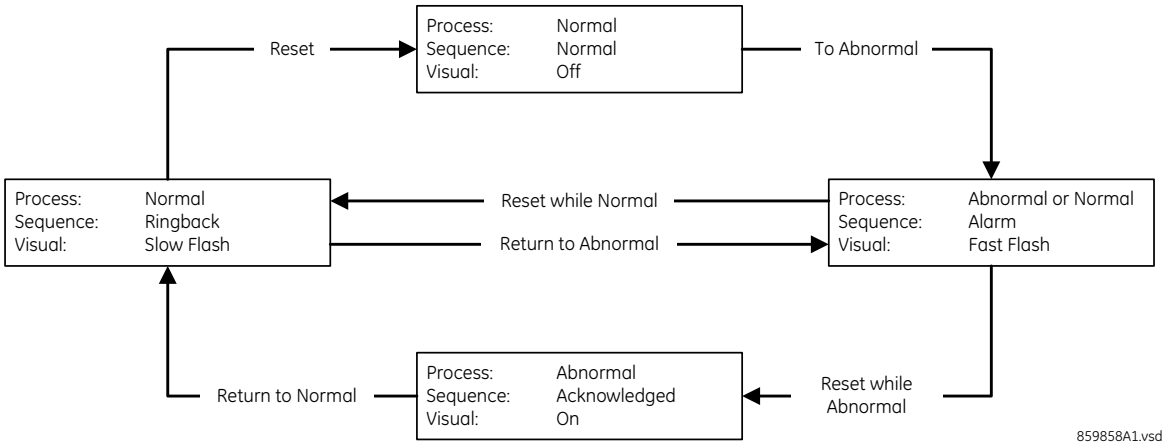

To reset all annunciator windows:

1. In the software, access **Actual Values > Graphical Panel > Annunciator Panel**.

To acknowledge/reset all annunciator windows on a page:

1. On the graphical front panel with none of the annunciator windows selected, press the **RESET** pushbutton once for acknowledgement and twice for reset. The flashing stops.

To acknowledge an annunciator window:

1. On the graphical front panel, press the Up, Down, Left, and Right pushbuttons to select the window, so that is has a yellow outline. Press the **RESET** or **ENTER** pushbutton. While a window is selected, if that window has activated since the last restart, the date/time of the last activation of that window displays in the header.

An alarm remains in an alarm state (for example, displays red) when the condition remains. That is, if you acknowledged a flashing alarm but the alarm condition remains, the background color remains red.

The **SETTINGS > INPUTS/OUTPUTS > RESETTING > RESET ANNUNCIATOR** setting can be used to select a FlexLogic operand that when activated acknowledges/resets all annunciator windows.

Annunciator editor

The annunciator editor is used to configure alarms and actual value displays for the graphical front panel.

The path in the EnerVista software is **Settings > Product Setup > Graphical Panel > Annunciator Editor**.

The figure shows the annunciator editor and its preview window. The page name is entered as General at the top right. Acknowledgeable and self-resetting alarms are set for basic functions, such as online/offline, Ethernet ports, unauthorized access/failed logins, and battery failure. The text to display in the annunciator window is entered. The IN SERVICE LED is set to be green because when the device is on, this LED is green. The preview shows what the annunciator looks like with all alarms triggered. The last window is not configured and displays blank/grey. In order for the Ethernet and battery alarms to work, the corresponding self-test alarms have been enabled under **Settings > Product Setup > User-Programmable Self Tests** (not shown). The LEDs can be viewed on the front panel, so adding them to the annunciator is for illustrative purposes only.

Figure 4-43: Annunciator editor and preview window

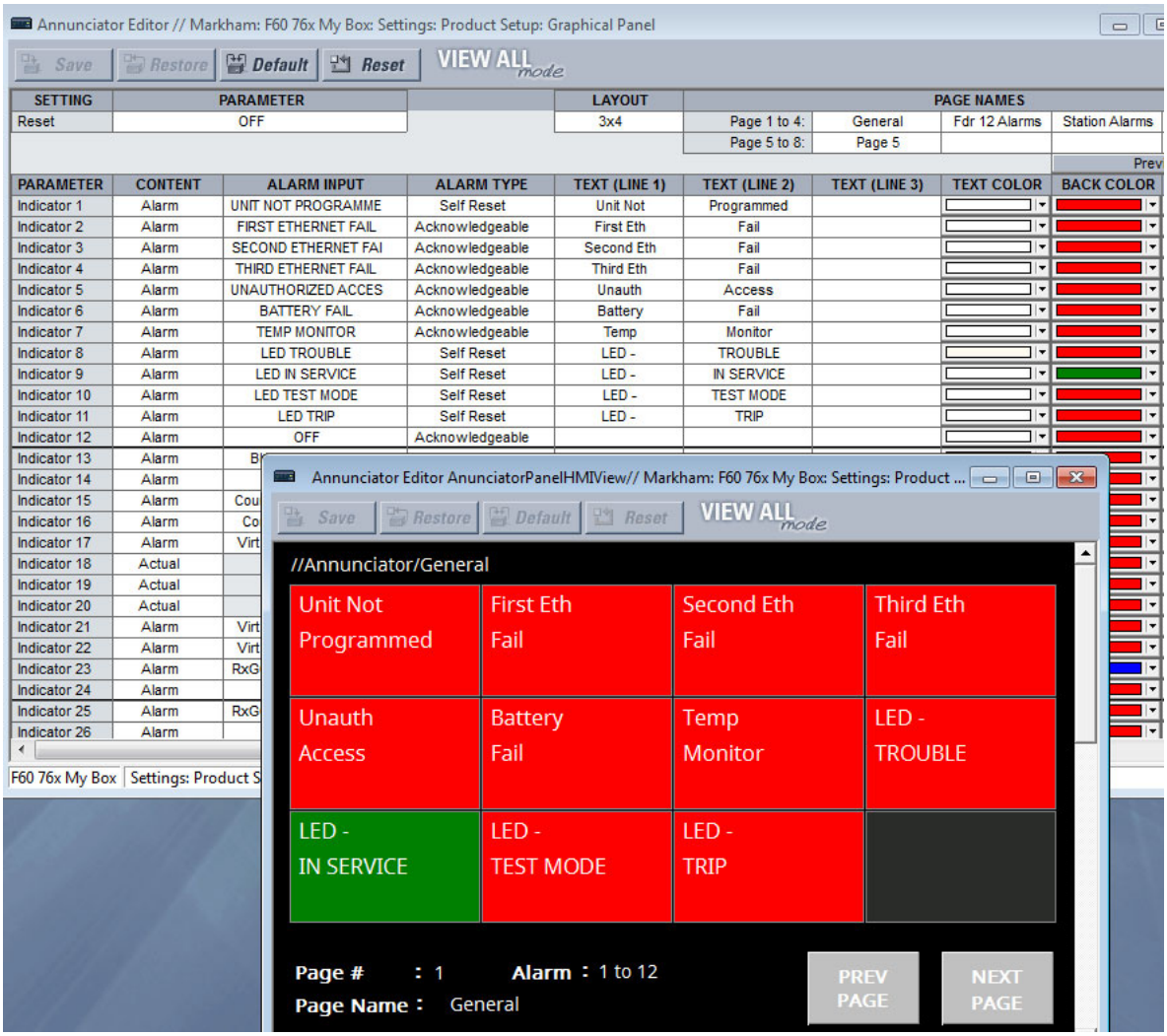

The three page layouts (3 × 4, 4 × 6, and 6 × 8) select the number of rows x columns of windows that appear in a page. Annunciator window size and text size shrink as the number of annunciator windows in a page increases.

Properties that can be edited include alarm type (acknowledgeable, latched, self-reset), alarm input (any FlexLogic operand), text color, and alarm background color.

The following buttons display at the top of the window:

- **Save** — Updates the connected device if online or the open setting file if offline with changes made
- **Restore** — Undoes changes that have not been saved
- **Default** — Changes all annunciator settings to their factory default values
- **Reset** — Displays factory default values. Previous settings are not lost unless you save the reset window.

Metering editor

The metering editor is an actual values display tool. It creates pages of actual values for the graphical front panel. There are two types: tables and phasor diagrams. Tabular actual values pages have settings to configure, while phasor actual values pages have no settings. Five tabular metering pages can be configured, while there can be a phasor page for each configured AC source. They display on the graphical front panel using the **Metering** Tab pushbutton.

The path to the editor is **Settings > Product Setup > Graphical Panel > Metering Editor**.

4

Figure 4-44: Metering editor with preview window

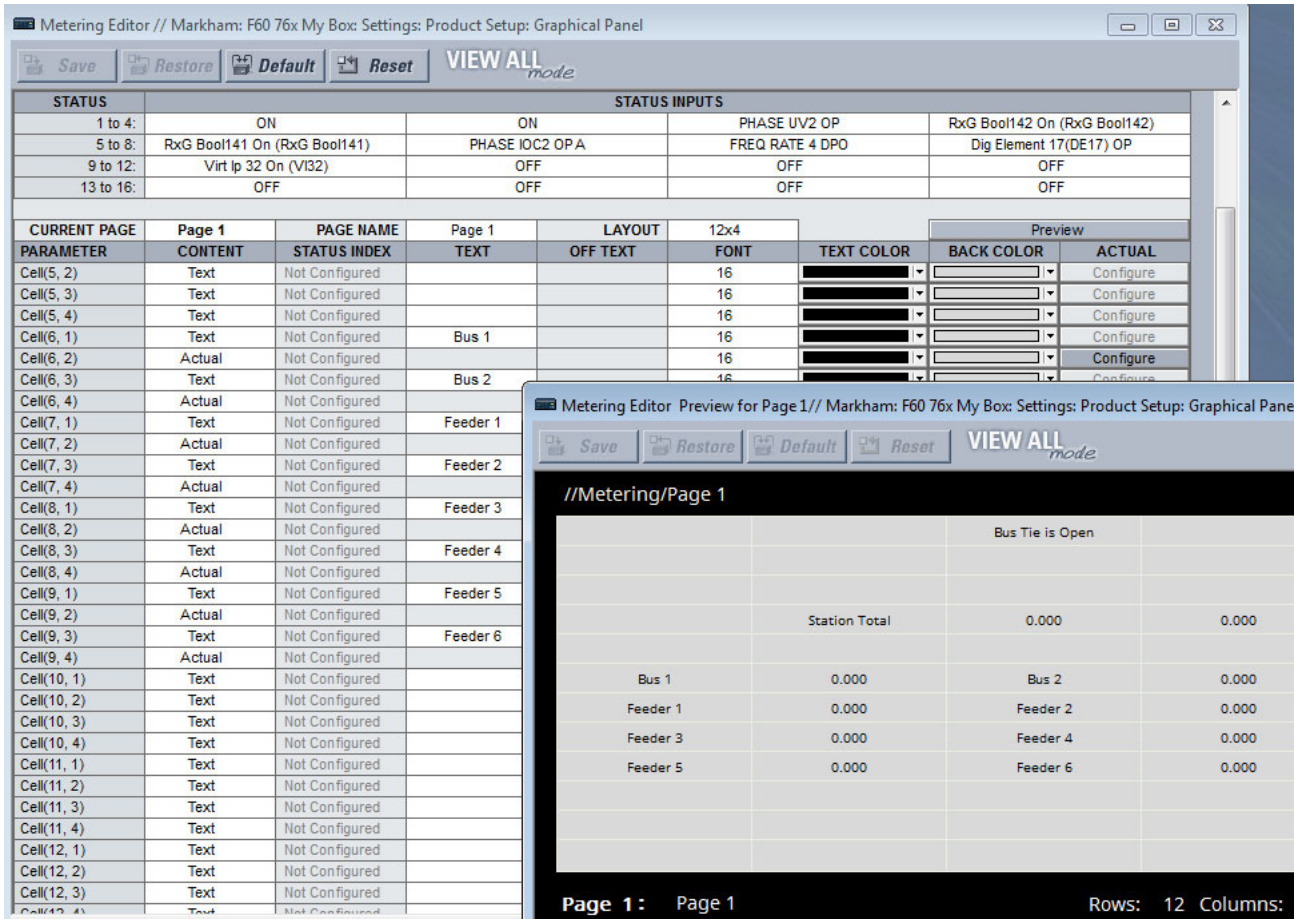

The inputs are selected at the top. Select from the drop-down list or start typing in the field.

The page, page name, and grid layout are set below the inputs.

Content to display is configured with the cell lines. The content can be actual values, a status indicator, or text.

- Actual value — Select from the FlexAnalogs applicable to the N60, where a FlexAnalog is an analog parameter
- Status — Select from the FlexLogic operands identified in the Status Inputs at the top of the window. An example is to display text to indicate whether the BATTERY FAIL operand is on or off.
- Text — Enter text to display in the table, for example name of table or column heading

If the metering input is other than OFF, the value of the selected metering input displays, formatted according to the size, text color, units, multiplier, and decimal configuration. Otherwise either the Text or the Off Text displays depending on the value of the operand selected by setting Status Input/Index.

A maximum of eight Status Inputs/Indexes can be used per metering page and 16 in all metering pages.

The following buttons display at the top of the window:

- **Save** — Updates the connected device if online or the open setting file if offline with changes made
- **Restore** — Undoes changes that have not been saved
- **Default** — Changes all actual value settings to their factory default values
- **Reset** — Displays factory default values. Previous settings are not lost unless you save the reset window.

Configurable navigation editor

Configurable Navigation is a feature that opens specified pages when specific FlexLogic operands are activated. This feature is useful to open the annunciator page containing an annunciator window that has entered its abnormal state.

In the example shown, failure of any of the three Ethernet ports triggers the Product Information page to display. With unauthorized access (such as wrong password), IRIG-B clock failure, or breaker trouble, the Event Records display. When a breaker opens, a single-line diagram displays. For the Ethernet and IRIG-B failure pages to work, these functions also have been enabled under **Settings > Product Setup > User-Programmable Self Tests**. For the breaker trouble, the single-line diagram has been configured.

Figure 4-45: Navigation editor

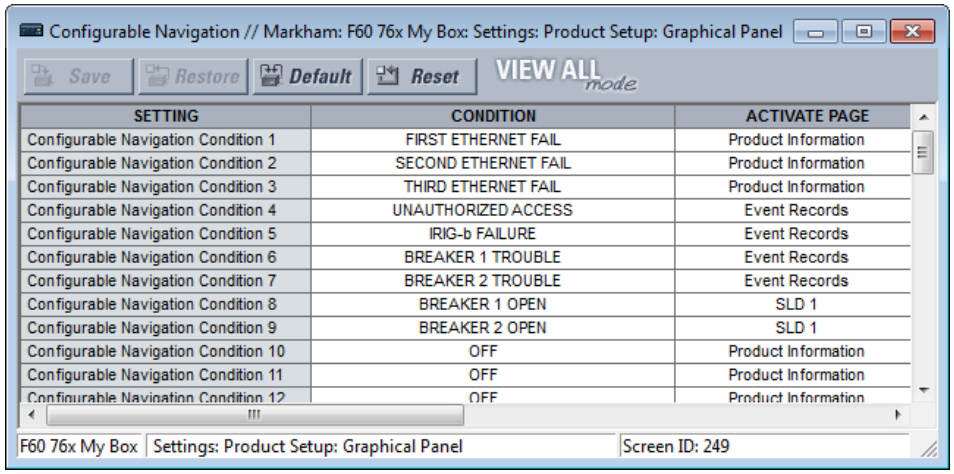

SETTING	CONDITION	ACTIVATE PAGE
Configurable Navigation Condition 1	FIRST ETHERNET FAIL	Product Information
Configurable Navigation Condition 2	SECOND ETHERNET FAIL	Product Information
Configurable Navigation Condition 3	THIRD ETHERNET FAIL	Product Information
Configurable Navigation Condition 4	UNAUTHORIZED ACCESS	Event Records
Configurable Navigation Condition 5	IRIG-b FAILURE	Event Records
Configurable Navigation Condition 6	BREAKER 1 TROUBLE	Event Records
Configurable Navigation Condition 7	BREAKER 2 TROUBLE	Event Records
Configurable Navigation Condition 8	BREAKER 1 OPEN	SLD 1
Configurable Navigation Condition 9	BREAKER 2 OPEN	SLD 1
Configurable Navigation Condition 10	OFF	Product Information
Configurable Navigation Condition 11	OFF	Product Information
Configurable Navigation Condition 12	OFF	Product Information

The path is **Settings > Product Setup > Graphical Panel > Configurable Navigation**.

The settings consist of 64 field pairs, each with a condition and an activation page. The condition selects any FlexLogic operand. The activation page selection is the standard set, such as product information, event records, annunciator pages, and single-line diagrams.

To use the feature, select a **CONDITION**, select its **ACTIVATE PAGE** option, then save. When selecting the condition operand, open the drop-down list and start typing in the field to auto-fill. For example, typing F displays FIRST ETHERNET FAIL.

The following buttons display at the top of the window:

- **Save** — Updates the connected device if online or the open setting file if offline with changes made
- **Restore** — Undoes changes that have not been saved

- **Default** — Changes all settings in the window to factory default values
- **Reset** — Displays factory default values. Previous settings are not lost unless you save the reset window.

4.2.3 Front panel navigation keys

4.2.3.1 Enhanced and basic front panels

Display messages are organized into pages under the following headings: actual values, settings, commands, and targets. The **MENU** key navigates through these pages. Each heading page is divided further into further submenus.

The **MESSAGE** keys navigate through the submenus. The **VALUE** keys increment or decrement numerical setting values when in programming mode. These keys also scroll through alphanumeric values in the text edit mode. Alternatively, values can be entered with the numeric keypad.

The decimal key initiates and advances to the next character in text edit mode or enters a decimal point.

The **HELP** key can be pressed at any time for context-sensitive help messages.

The **ENTER** key stores setting values.

When entering an IP address on the front panel, key in the first sequence of the number, then press the • key for the decimal place. For example, for 127.0.0.1, press 127, then •, then 0, then •, then 0, then •, then 1. To save the address, press the **ENTER** key.

When entering or changing an order code with two lines, press the down arrow to access the second line. On a basic front panel, do this under **ACTUAL VALUES ⇨⇩ PRODUCT INFO ⇨ MODEL INFORMATION**.

The figure shows the sequence to use to enter a setting. Subsequent sections provide more detail.

Figure 4-46: Front panel keypad use (basic front panel shown)

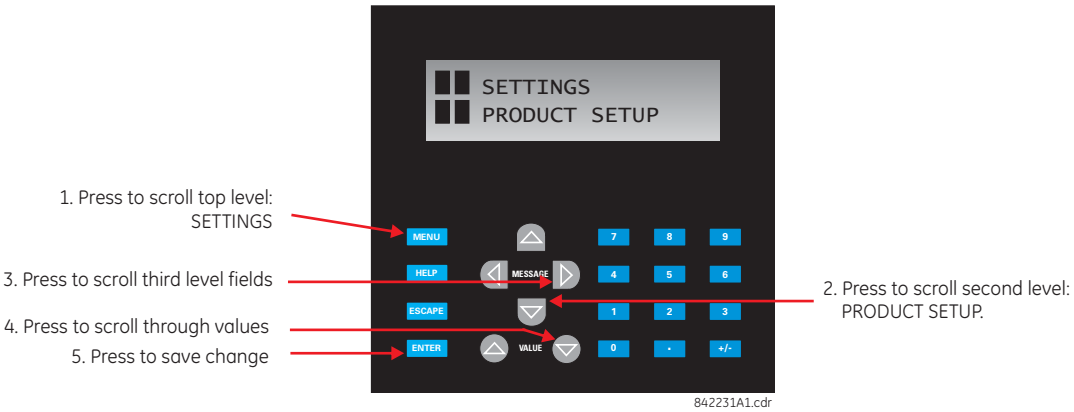

4.2.3.2 Graphical front panel

These keys and pushbuttons navigate and select items.

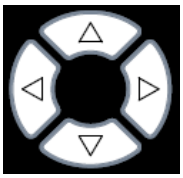

Up/Down/Left/Right — These pushbuttons move the selector among the options on a page. The selection is indicated by a yellow background or a yellow border. On menu pages, the Right pushbutton activates the selected submenu drilling down the menu hierarchy, and the Left pushbutton backs up the menu hierarchy. These pushbuttons have a typematic feature on some pages: after a short pause, the pushbutton repeats as long as it is pressed.

ENTER — Activates the selection on the display, for example a submenu, a control, a keypad key, or a setting. Also stores updated settings.

ESCAPE — If a setting is open for edit, this pushbutton closes the setting without saving. If an item is selected, this pushbutton deselects it. Otherwise this pushbutton activates the previous page in the page hierarchy.

RESET — Clears all latched LED indications and target messages. When a page with acknowledgeable/resettable items is displayed, it instead resets/acknowledges all items on that page, or if an item on that page is selected, it resets/acknowledges that item.
If you reset/acknowledge alarms, they stop flashing but remain in the alarm state as long as that state remains. In other words, a red alarm does not switch off just because you acknowledged the alarm.

Home — Activates the home page, which is the root page. The page displays product information by default and is configurable.

Side pushbutton — Five pushbuttons on the left side of the display and five pushbuttons on the right side of the display. They perform various functions depending on the displayed page, such as switchgear controls. The display dynamically shows its label next to each side pushbuttons when the pushbutton has an assigned function. These pushbuttons can also be programmed to function as user-programmable pushbuttons 9 and above.

Tab pushbutton — Five pushbuttons under the display. They navigate through the page hierarchy, and on some pages activate other actions. The display footer dynamically labels the page or action that is activated by the Tab pushbutton.

User-programmable pushbutton — Eight physical pushbuttons are associated with the first eight user-programmable pushbutton elements. Numbering is down, that is, 1 to 4 down the left column and 5 to 8 down the right column.
These elements control a set of FlexLogic operands that can be used to initiate outputs or select modes. Each physical pushbutton has an integrated LED indicator that can be user-configured to display the appropriate status.
These pushbuttons have clear covers behind which custom labels can be mounted. A utility is available to print the labels, under **File > Front Panel Report** in the software.

4.2.4 LED indicators

4.2.4.1 Enhanced front panel

The enhanced front panel display provides five columns of LED indicators. The first column contains 14 status and event-cause LEDs. The next four columns contain the 48 user-programmable LEDs.

The **RESET** key is used to reset any latched LED indicator or target message, once the condition has been cleared (these latched conditions can also be reset via the **SETTINGS** ⇨⇩ **INPUT/OUTPUTS** ⇨⇩ **RESETTING** menu).

The **USER** keys are used by the breaker control feature.

Figure 4-47: Typical LED panel for enhanced front panel

842811A1.CDR

The status indicators in the first column are as follows:

- **IN SERVICE** — Indicates that control power is applied, all monitored inputs/outputs and internal systems are fine, and the relay is in (online) Programmed mode (under **Settings > Product Setup > Installation**)
- **TROUBLE** — Indicates that the relay has detected an internal problem. Check the self-test messages outlined at the end of the Commands and Targets chapter, and view the event records under **Actual Values > Records**. For a beta / pre-release, this LED is always on.
- **TEST MODE** — Indicates that the relay is in test mode. For information, see the Testing section in the Settings chapter.
- **TRIP** — Indicates that the selected FlexLogic operand serving as a trip input has operated. Set the operand under **Settings > Product Setup > User-Programmable LEDs > Trip & Alarm LEDs**. This indicator latches; initiate the reset command to reset the latch.
- **ALARM** — Indicates that the FlexLogic operand serving as an alarm switch has operated. Set the operand under **Settings > Product Setup > User-Programmable LEDs > Trip & Alarm LEDs**. This indicator never latches.
- **PICKUP** — Indicates that an element is picked up. This indicator never latches.

The event-cause indicators in the first column are as follows.

Event-cause LEDs are below the status LEDs. They are turned on or off by protection elements that have their respective target setting selected as either "Enabled" or "Latched." If a protection element target setting is "Enabled," then the corresponding event-cause LEDs remain on as long as the operand associated with the element remains asserted. If a protection element target setting is "Latched," then the corresponding event-cause LEDs turn on when the operate operand associated with the element is asserted and remains on until the **RESET** button on the front panel is pressed after the operand is reset.

All elements that are able to discriminate faulted phases can independently turn off or on the phase A, B, or C LEDs. This includes phase instantaneous overcurrent, phase undervoltage, and so on. This means that the phase A, B, and C operate operands for individual protection elements are ORed to turn on or off the phase A, B, or C LEDs.

- **VOLTAGE** — This LED indicates voltage was involved
- **CURRENT** — This LED indicates current was involved
- **FREQUENCY** — This LED indicates frequency was involved
- **OTHER** — This LED indicates a composite function that is not solely current, voltage, or frequency based (distance or power for example) or a control function (digital element or trip bus for example)
- **PHASE A** — This LED indicates phase A was involved
- **PHASE B** — This LED indicates phase B was involved
- **PHASE C** — This LED indicates phase C was involved
- **NEUTRAL/GROUND** — This LED indicates that neutral or ground was involved

The user-programmable LEDs consist of 48 amber LED indicators in four columns. The operation of these LEDs is user-defined. Support for applying a customized label beside every LED is provided. Default labels are shipped in the label package of every N60, together with custom templates. The default labels can be replaced by user-printed labels.

User customization of LED operation is of maximum benefit in installations where languages other than English are used to communicate with operators. See the User-Programmable LEDs section in chapter 5 for the settings used to program the operation of the LEDs on these panels.

4.2.4.2 Basic front panel

The basic front panel consists of three panels with LED indicators, keys, and a communications port. The **RESET** key is used to reset any latched LED indicator or target message, once the condition has been cleared (these latched conditions can also be reset via the **SETTINGS** ⇨⇩ **INPUT/OUTPUTS** ⇨⇩ **RESETTING** menu). The RS232 port is for connection to a computer.

The **USER** keys are used by the breaker control feature.

Figure 4-48: LED panel 1

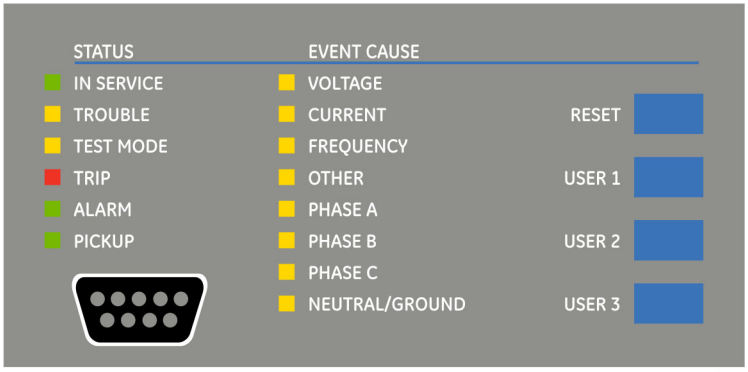

842781A1.CDR

Status indicators

- **IN SERVICE** — Indicates that control power is applied, all monitored inputs/outputs and internal systems are fine, and the relay is in (online) Programmed mode (under **Settings > Product Setup > Installation**)
- **TROUBLE** — Indicates that the relay has detected an internal problem. Check the self-test messages outlined at the end of the Commands and Targets chapter, and view the event records under **Actual Values > Records**. For a beta / pre-release, this LED is always on.
- **TEST MODE** — Indicates that the relay is in test mode. For information, see the Testing section in the Settings chapter.
- **TRIP** — Indicates that the selected FlexLogic operand serving as a trip switch has operated. This indicator always latches; initiate the reset command to reset the latch.
- **ALARM** — Indicates that the selected FlexLogic operand serving as an alarm switch has operated. This indicator never latches.
- **PICKUP** — Indicates that an element is picked up. This indicator never latches.

Event-cause indicators

Event-cause LEDs are turned on or off by protection elements that have their respective target setting selected as either "Enabled" or "Latched." If a protection element target setting is "Enabled," then the corresponding event cause LEDs remain on as long as the operand associated with the element remains asserted. If a protection element target setting is "Latched," then the corresponding event cause LEDs turn on when the operate operand associated with the element is asserted and remains on until the **RESET** button on the front panel is pressed after the operand is reset.

All elements that are able to discriminate faulted phases can independently turn off or on the phase A, B, or C LEDs. This includes phase instantaneous overcurrent, phase undervoltage, and so on. This means that the phase A, B, and C operate operands for individual protection elements are ORed to turn on or off the phase A, B, or C LEDs.

- **VOLTAGE** — Indicates voltage was involved
- **CURRENT** — Indicates current was involved
- **FREQUENCY** — Indicates frequency was involved
- **OTHER** — Indicates a composite function that is not solely current, voltage, or frequency based (distance or power for example) or a control function (digital element or trip bus for example)
- **PHASE A** — Indicates phase A was involved
- **PHASE B** — Indicates phase B was involved
- **PHASE C** — Indicates phase C was involved
- **NEUTRAL/GROUND** — Indicates that neutral or ground was involved

User-programmable indicators

The second and third panels provide 48 amber LED indicators whose operation is controlled by the user. Custom labeling can be done.

User customization of LED operation is of maximum benefit in installations where languages other than English are used to communicate with operators. See the User-programmable LEDs section in chapter 5 for the settings used to program the operation of the LEDs on these panels.

Figure 4-49: LED panels 2 and 3 (index template)

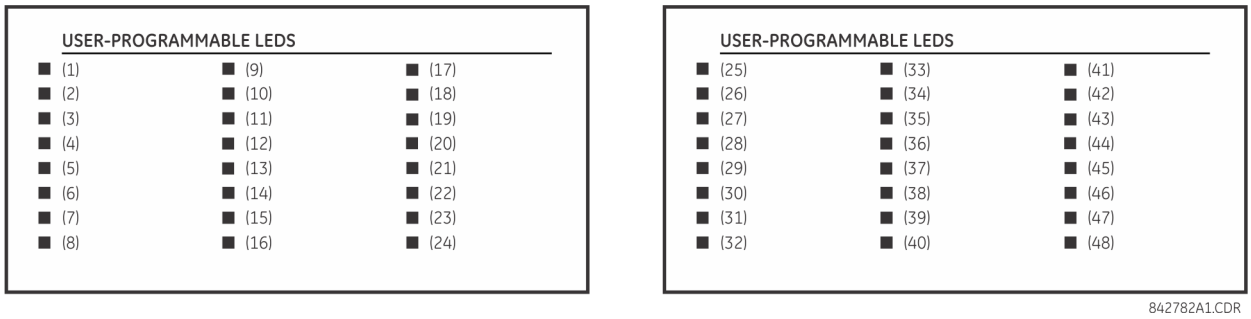

Default labels for LED panel 2

The default labels are intended to represent the following:

- **GROUP 1...6** — The illuminated GROUP is the active settings group
- **BREAKER 1(2) OPEN** — The breaker is open
- **BREAKER 1(2) CLOSED** — The breaker is closed
- **BREAKER 1(2) TROUBLE** — A problem related to the breaker has been detected
- **SYNCHROCHECK NO1(6) IN-SYNCH** — Voltages have satisfied the synchrocheck element

The relay is shipped with the default label for the LED panel 2. The LEDs, however, are not pre-programmed. To match the pre-printed label, the LED settings must be entered as shown in the User-programmable LEDs section of chapter 5. The LEDs are fully user-programmable. The default labels can be replaced by user-printed labels for both panels as explained in the next section.

Figure 4-50: LED panel 2 (default labels)

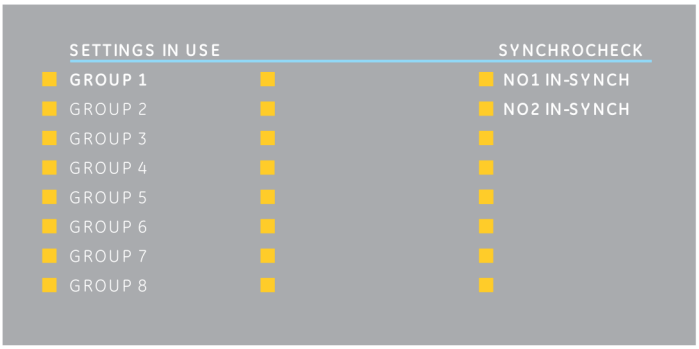

4.2.4.3 Graphical front panel

The graphical front panel has 14 LEDs. LEDs 1 to 5 are fixed status LEDs, and LEDs 6 to 14 are programmable.

Status indicators

- **IN SERVICE** — Indicates that control power is applied, all monitored inputs/outputs and internal systems are fine, the relay's test mode is disabled, and the relay is in (online) Programmed mode (under **Settings > Product Setup > Installation**)
- **TROUBLE** — Indicates that the relay has detected an internal problem. Check the self-test messages outlined at the end of the Commands and Targets chapter, and view the event records under **Actual Values > Records**. For a beta / pre-release, this LED is always on.

- **TEST MODE** — Indicates that the relay is in Test Blocked (solid) or Test (flashing) mode. For information, see the Testing section in the Settings chapter.
- **TRIP** — Indicates that the selected FlexLogic operand serving as a trip input has operated. Set the operand under **Settings > Product Setup > User-Programmable LEDs > Trip & Alarm LEDs**. This indicator latches; initiate the reset command to reset the latch.
- **ALARM** — Indicates that the selected FlexLogic operand serving as an alarm input has operated. Set the operand under **Settings > Product Setup > User-Programmable LEDs > Trip & Alarm LEDs**.

Figure 4-51: Example of LEDs on graphical front panel

User-programmable event-cause indicators

Event-cause LEDs are below the status LEDs. They are turned on or off by protection elements that have their respective target setting selected as "Self-Reset" or "Latched." If set to "Self-Reset," then the corresponding event cause LED remains on as long as the operand associated with the element remains asserted. If set to "Latched" and asserted, then it remains on until the operand is reset and then a reset command initiated.

All elements that are able to discriminate faulted phases can independently turn on or off the phase A, B, or C LEDs. This includes phase instantaneous overcurrent, phase undervoltage, and so on. This means that the phase A, B, and C operate operands for individual protection elements are ORed to turn on or off the phase A, B, or C LEDs.

The LEDs have defaults and can be configured to show instead the status of any FlexLogic operand.

The labeling area has a clear cover for custom labels. A utility is available to print stick-on labels, as outlined later in this chapter.

These LEDs are programmed by default as follows:

- **PICKUP — LED 6** — Indicates that an element is picked up, and hence a trip can be imminent
- **VOLTAGE — LED 7** — Indicates voltage was involved
- **CURRENT — LED 8** — Indicates current was involved
- **FREQUENCY — LED 9** — Indicates frequency was involved
- **OTHER — LED 10** — Indicates a composite function that is not solely current, voltage, or frequency based (distance or power for example) or a control function (digital element or trip bus for example)
- **PHASE A — LED 11** — Indicates phase A was involved
- **PHASE B — LED 12** — Indicates phase B was involved
- **PHASE C — LED 13** — Indicates phase C was involved
- **NEUTRAL/GROUND — LED 14** — Indicates that neutral or ground was involved

4.2.5 Front panel labelling

4.2.5.1 Enhanced front panel

The following procedure requires these pre-requisites:

- The UR front panel label cutout sheet (GE part number 1006-0047) has been downloaded from http://www.gegridsolutions.com/products/support/ur/URLEDenhanced.doc and printed
- Small-bladed knife

To create custom LED and pushbuttons labels for the enhanced front panel:

1. Start the EnerVista UR Setup software.
2. If not already copied to the Offline Window area, right-click the online device and select the **Add Device to Offline Window** option. Click the **Receive** button in the window that opens to save the settings file to the Offline Window area.
3. Type labels as follows. Select the **File > Front Panel Report**. The window opens.

Figure 4-52: Enhanced front panel label designer

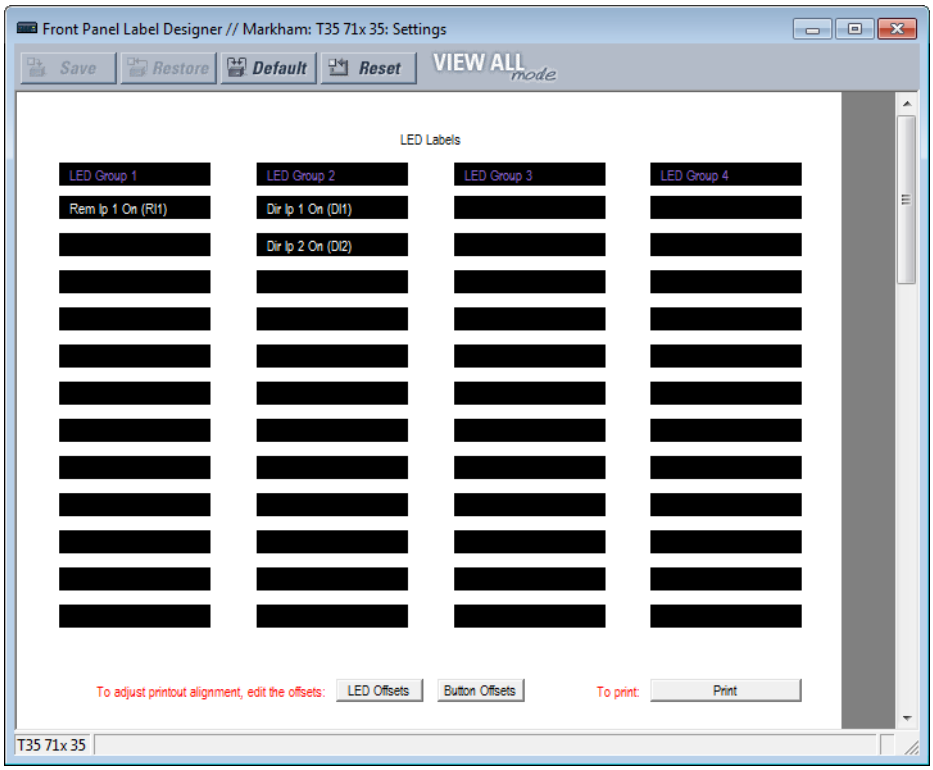

4. Enter the text to appear next to each LED and above each user-programmable pushbutton in the fields provided. The **LED Offsets** and **Button Offsets** buttons move all labels left/right and up/down on the page (they both do the same action, so use either button). The **Button Offsets** button does not display when there are no pushbuttons to customize.
5. Feed the UR front panel label cutout sheet into a printer and press the **Print** button in the front panel report window.
6. When printing is complete, fold the sheet along the perforated lines and punch out the labels.
7. Remove the UR label insert tool from the package and bend the tabs as described in the following procedures. These tabs are used for removal of the default and custom LED labels.

NOTE

Use the tool with the printed side containing the GE part number facing the user.

The label package shipped with every N60 contains the three default labels, the custom label template sheet, and the label removal tool.

If the default labels are suitable for your application, insert them in the appropriate slots and program the LEDs to match them. If you require custom labels, use the following procedures to remove the original labels and insert the new ones.

To set up and use the label removal tool:

1. Bend the tabs at the left end of the tool upwards as shown.

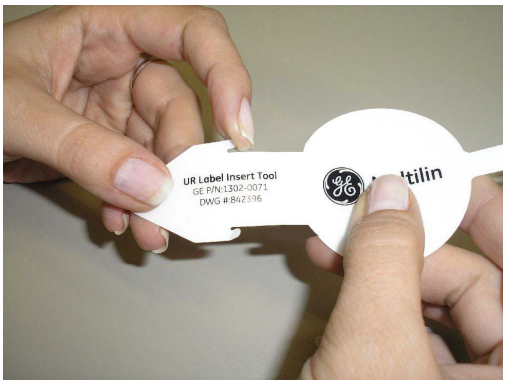

Bend the tab at the center of the tool tail as shown.

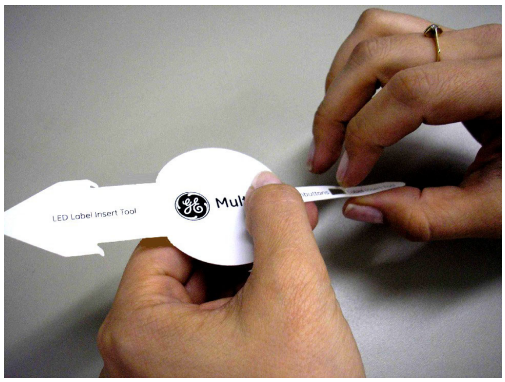

To remove the LED labels from the N60 front panel and insert the custom labels:

1. Use the knife to lift the LED label and slide the label tool underneath. Ensure that the bent tabs are pointing away from the relay.

2. Slide the label tool under the LED label until the tabs snap out as shown. This attaches the label tool to the LED label.

3. Remove the tool and attached LED label as shown.

4. Slide the new LED label inside the pocket until the text is properly aligned with the LEDs, as shown.

To remove the user-programmable pushbutton labels from the N60 front panel and insert the custom labels:

1. Use the knife to lift the pushbutton label and slide the tail of the label tool underneath, as shown. Ensure that the bent

tab points away from the relay.

2. Slide the label tool under the user-programmable pushbutton label until the tabs snap out as shown. This attaches the label tool to the user-programmable pushbutton label.

3. Remove the tool and attached user-programmable pushbutton label.

4. Slide the new user-programmable pushbutton label inside the pocket until the text is properly aligned with the

buttons.

4

4.2.5.2 Basic front panel

After programming LEDs and pushbuttons under **Settings > Product Setup > User-Programmable Leds** and **User-Programmable Pushbuttons**, labels can be created for the front panel.

To create LED and pushbutton labels for a basic front panel:

1. In the EnerVista software, if the N60 is not already listed in the Offline Window area, add it by right-clicking it and selecting the **Add Device to Offline Window** option.
2. Click the **File > Front Panel Report** menu item and select the device.
3. In the Front Panel Report window, double-click an LED or pushbutton slot and type a label. If you need to see the existing front panel remotely, access **Actual Values > Front Panel** for the online device. If you need to see the In the figure, note that labeling is being done for the third set of LEDs because the second panel of LEDs was factory-labeled.

Figure 4-53: Basic front panel label designer (LEDs shown)

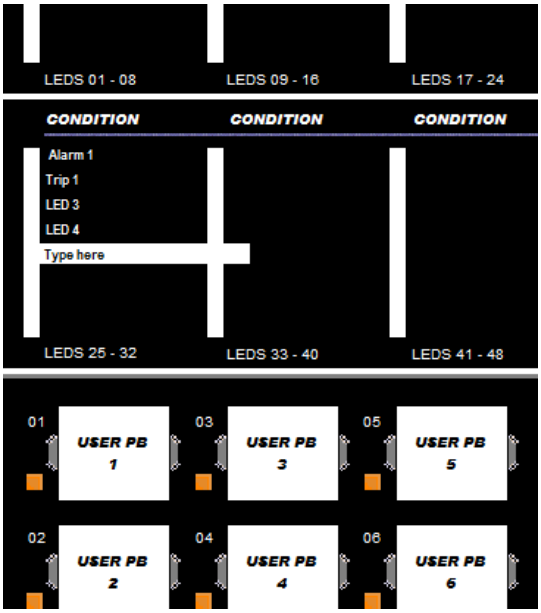

4. Optionally save the changes by clicking the **Save** icon on the toolbar.
5. Click the **Print** icon on the toolbar. Consider printing to PDF format and adjusting the zoom for appropriate label size, then print on a physical printer.
6. Cut labels as a block or individually, for example with scissors or an Exacto knife.
7. If there is a plastic cover over the front panel, remove it by gently pushing in on the right side and lifting off the cover.
8. Remove the plastic cover over the LEDs or pushbutton(s) using a screw driver.
9. Insert the labels.
10. Re-attach the plastic covers.

4.2.5.3 Graphical front panel

The N60 includes software for labeling the LEDs and pushbuttons on the graphical front panel and a sticker sheet with pre-printed and blank labels. The pre-printed labels are on the top-left of the template sheet, and the blank labels are on the bottom-right. Use the pre-printed labels, or use the designer provided in the software and print labels onto the template. One sheet is provided.

The example shows LED labeling, with pushbutton labeling below it (cut off).

To create LED and pushbutton labels for the front panel:

1. In the EnerVista software, in the Online or Offline Window area, access **Settings > Front Panel Label Designer** or **Front Panel Label Designer** (at the product root level). The designer window opens with pre-configured labels.
2. Under **File > Print Setup**, change the page orientation to **Landscape**.
3. In the label designer window, delete all labels not wanted for printing. This can be done by clicking the **Reset** button to clear all labels, or by selecting each unwanted label and deleting it. Otherwise, all labels displayed print on the template and use up the template. If you make a mistake, exit the window and open it again to view the default labels.
4. Based on the location on the template on which to print, create the labels by typing in the appropriate slots.

Figure 4-54: Front panel label designer for graphical front panel

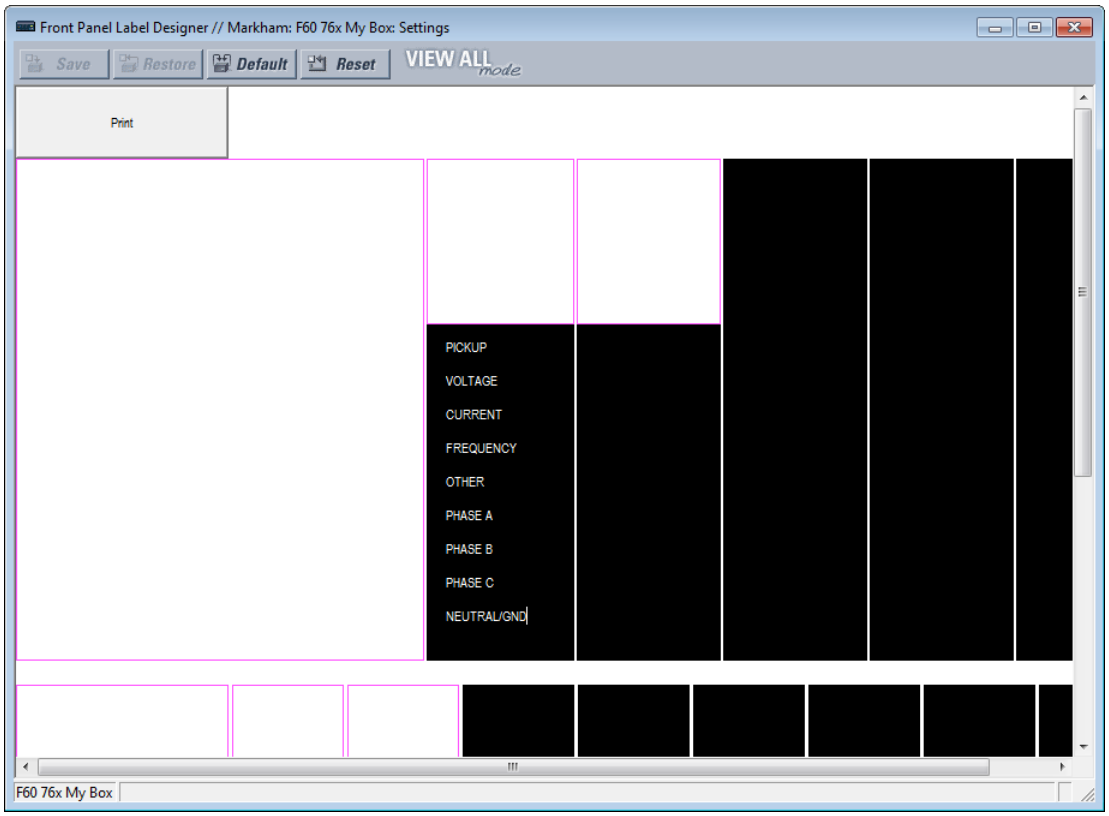

5. Click the **Print** button in the window and select the printer.
6. Once printed, peel the labels off the template and stick them on the front panel. For the enhanced and graphical front panels, they go over the clear plastic inserts, not under. For the basic front panel, they go under or over the plastic covers.

Any changes are not saved. Each time that the label designer window opens, the original template displays. Any labels deleted are not lost.

4.2.6 Menu navigation

Press the **MENU** key to display selections or home page. Each press of the key advances through the following main headings:

- Actual Values
- Settings
- Commands
- Targets
- Factory Service
- User displays (when enabled)

4.2.6.1 Enhanced and basic front panels

The setting and actual value pages are arranged hierarchically. Header display pages are indicated by double scroll bars (■■), while sub-header pages are indicated by a single scroll bar (■). The header display pages represent the highest level of the hierarchy and the sub-header display pages fall below this level. Use the down, right, left, and up arrows to navigate the menu. The **MESSAGE** up and down arrow keys move within a group of headers, sub-headers, setting values, or actual

values. Continually pressing the **MESSAGE** right arrow from a header display displays specific information for the category. Conversely, continually pressing the **MESSAGE** left arrow from a setting value or actual value display returns to the header display.

Default values are indicated in this instruction manual in mixed case. In the example shown here, the default access level is Restricted.

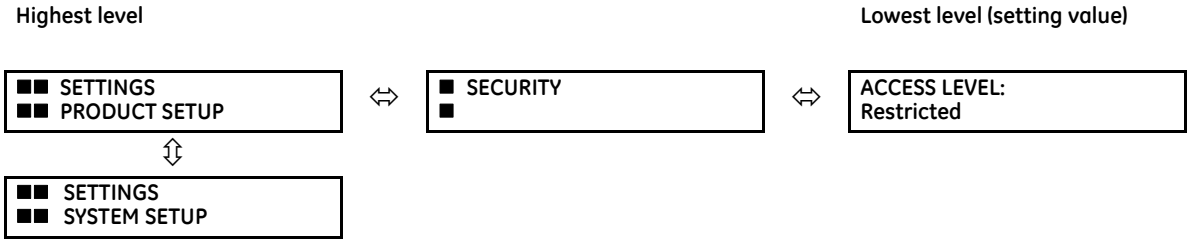

Example

■■ ACTUAL VALUES ■■ STATUS	Press the **MENU** key until the Actual Values header page appears. This page contains system and relay status information.
■■ SETTINGS ■■ PRODUCT SETUP	Press the **MENU** key until the Settings header page appears. This category contains settings to configure the relay.
■ SECURITY ■	Press the **MESSAGE** right arrow once to display the first sub-header (Security).
ACCESS LEVEL: Restricted	Press the **MESSAGE** right arrow once to display the first setting for Security.
■ SECURITY ■	Press the **MESSAGE** left arrow to return to the Security heading.
■ DISPLAY ■ PROPERTIES	Press the **MESSAGE** down arrow to display the second setting sub-header associated with the Product Setup header.
LANGUAGE: English	Press the **MESSAGE** right arrow once to display the first setting for Display Properties.
■■ SETTINGS ■■ SYSTEM SETUP	Press the **MESSAGE** left arrow to return to the Display Properties page, then again to return to the Product Setup Page. Press the **MESSAGE** down arrow to move to the next Settings page. This page contains settings for System Setup.

4.2.6.2 Graphical front panel

Access the main menu by pressing the **Home** pushbutton, then the **Menu** Tab pushbutton.

Use the Up and Down arrow pushbuttons to select a submenu, then press the Right or **ENTER** pushbutton to drill into that submenu. The Left and **ESCAPE** pushbuttons back up the menu hierarchy.

The **Page Up** and **Page Down** Tab pushbuttons also navigate through the list. When there is only a single page of options, they jump to the first and last entries.

The options displayed depend on order code.

Figure 4-55: Main menu on graphical front panel

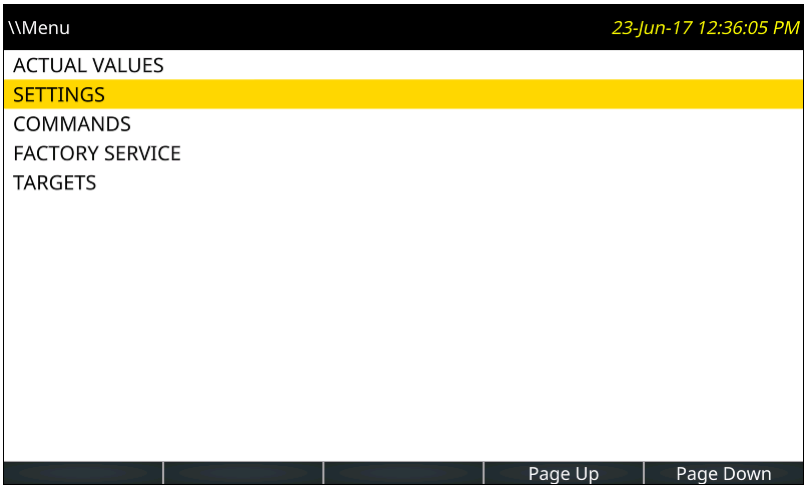

4

4.2.7 Change settings

4.2.7.1 Enhanced and basic front panels

Numerical data

Each numerical setting has its own minimum, maximum, and increment value associated with it. These parameters define what values are acceptable for a setting.

FLASH MESSAGE **TIME: 10.0 s**	For example, select the **SETTINGS** ⇨ **PRODUCT SETUP** ⇨⇩ **DISPLAY PROPERTIES** ⇨⇩ **FLASH MESSAGE TIME** setting.
⇩	
MINIMUM: 0.5 **MAXIMUM: 10.0**	Press the **HELP** key to view the minimum and maximum values. Press the key again to view the next context sensitive help message.

Two methods of editing and storing a numerical setting value are available.

- **0 to 9 and decimal point** — The relay numeric keypad works the same as a calculator. A number is entered one digit at a time. The leftmost digit is entered first and the rightmost digit is entered last. Pressing the **MESSAGE** left arrow or pressing the **ESCAPE** key, returns the original value to the display.
- **VALUE keys** — The **VALUE** up arrow increments the displayed value by the step value, up to the maximum value allowed. While at the maximum value, pressing the **VALUE** up arrow again allows the setting selection to continue upward from the minimum value. The **VALUE** down arrow decrements the displayed value by the step value, down to the minimum value. While at the minimum value, pressing the **VALUE** down arrow again allows the setting selection to continue downward from the maximum value.

FLASH MESSAGE **TIME: 2.5 s**	As an example, set the flash message time setting to 2.5 seconds. Press the appropriate numeric keys in the sequence "2 . 5". The display message changes as the digits are being entered.
⇩	
NEW SETTING **HAS BEEN STORED**	Until **ENTER** is pressed, editing changes are not registered by the relay. Press **ENTER** to store the new value in memory. This flash message momentarily appears as confirmation of the storing process. Numerical values that contain decimal places are rounded-off if more decimal place digits are entered than specified by the step value.

Enumeration data

Enumeration settings have data values that are part of a set, whose members are explicitly defined by a name. A set has two or more members.

ACCESS LEVEL: **Restricted**	For example, the selections available for **ACCESS LEVEL** are "Restricted," "Command," "Setting," and "Factory Service."

Enumeration type values are changed using the **VALUE** keys. The **VALUE** up arrow displays the next selection while the **VALUE** down arrow displays the previous selection.

ACCESS LEVEL: **Setting**	If the **ACCESS LEVEL** needs to be "Setting," press the **VALUE** keys until the proper selection displays. Press **HELP** at any time for the context sensitive help messages.
⇩	
NEW SETTING **HAS BEEN STORED**	Changes are not registered by the relay until the **ENTER** key is pressed. Pressing **ENTER** stores the new value in memory. This flash message momentarily appears as confirmation.

4

Alphanumeric text

Text settings have data values that are fixed in length, but user-defined in characters. They can be upper-case letters, lower-case letters, numerals, and a selection of special characters.

There are several places where text messages can be programmed to allow the relay to be customized for specific applications. One example is the Message Scratchpad. Use the following procedure to enter alphanumeric text messages.

For example, enter the text “Breaker #1”.

1. Press the decimal point to enter text edit mode.
2. Press the **VALUE** keys until the character 'B' appears; press the decimal key to advance the cursor to the next position.
3. Repeat step 2 for the remaining characters: r,e,a,k,e,r, ,#,1.
4. Press **ENTER** to store the text.
5. If you have any problem, press **HELP** to view context sensitive help. Flash messages appear sequentially for several seconds each. For the case of a text setting message, pressing **HELP** displays how to edit and store new values.

4.2.7.2 Graphical front panel

When enabling an element in the EnerVista software that outputs to an actual value, the actual values menu is not updated on the graphical front panel via Ethernet connection when that menu is active on the graphical front panel. Navigate out and back into the menu for activation.

Numerical data

This example outlines how to change the FLASH MESSAGE TIME setting. Flash messages are status, warning, error, and information messages displayed in response to certain key presses during settings programming. An example is a confirmation message upon saving settings. This setting specifies how long to display the message.

Press the **Menu** pushbutton to display the main menu.

Figure 4-56: Main menu

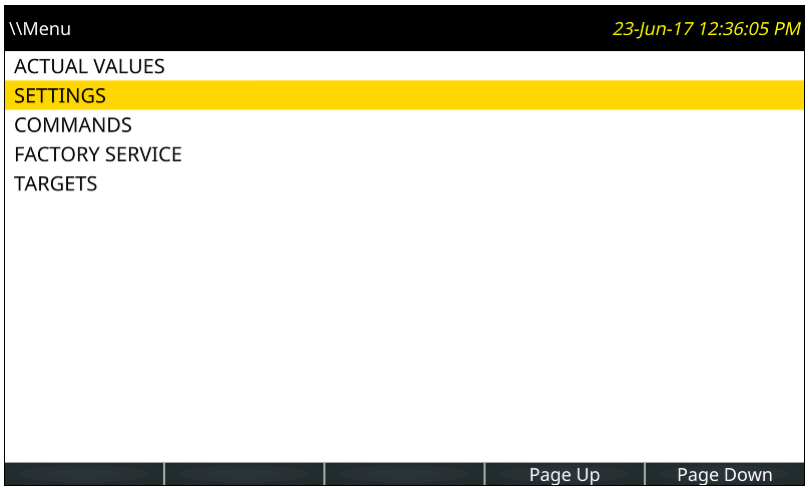

Use the Up or Down pushbutton to select **SETTINGS**, then press the Right or **ENTER** pushbutton.

Figure 4-57: Settings menu

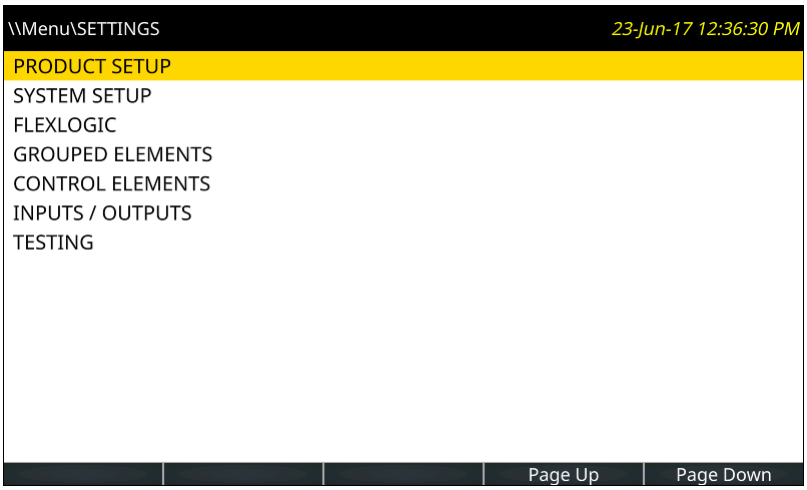

With **PRODUCT SETUP** selected, press the Right or **ENTER** pushbutton.

Figure 4-58: Product Setup menu

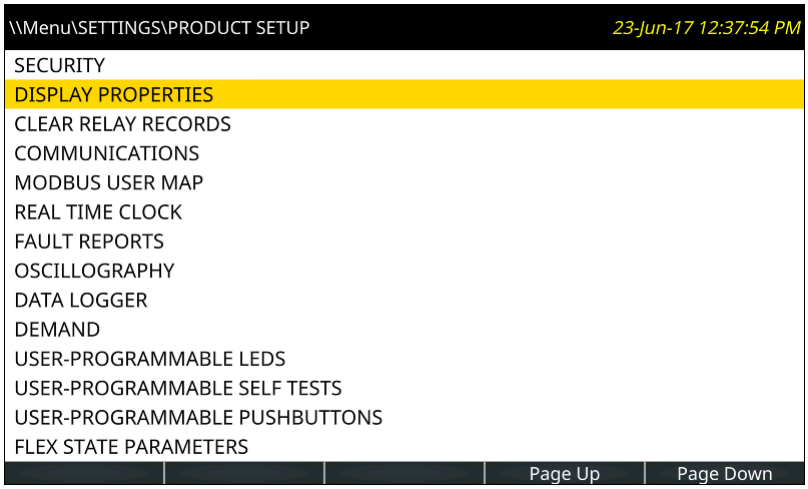

Use the Up or Down pushbutton to select **DISPLAY PROPERTIES**, then press the Right or **ENTER** pushbutton.

Figure 4-59: Display Properties menu

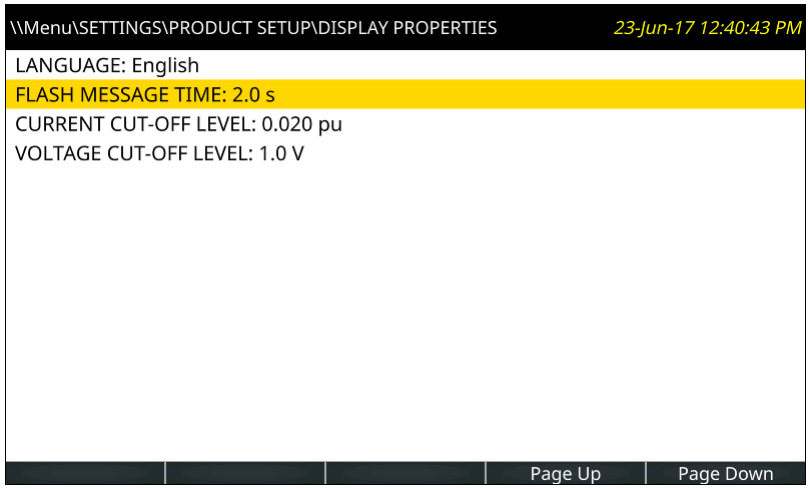

Use the Up or Down pushbutton to select **FLASH MESSAGE TIME**, then press the Right or **ENTER** pushbutton. If the relay is configured to require login to edit settings, and the user is not already logged in, the login page displays. When the user has successfully logged in, the setting is opened for edit. As the **FLASH MESSAGE TIME** setting accepts a numerical value, a keypad displays. The time is to be changed to 4.0 seconds.

The current setting displays. A flashing cursor line marks the insertion point, initially positioned after the last character of the setting. The setting range displays under the text.

Press the **<--** **Move Cursor** and **Move Cursor** **-->** Tab pushbuttons to move the insertion point. Place it after the 2.

Press the **Backspace** Tab pushbutton to remove the character to the left of the cursor, in this case the 2.

Using the arrow keys, enter another time, for example 4 for four seconds. These Up, Down, Left, and Right pushbuttons move the keypad key selector. Pressing the **ENTER** pushbutton with the **-** key selected inverts the sign. Pressing the **ENTER** pushbutton with the decimal point selected enters that character at the insertion point. Push **ENTER** now to accept the 4.

Figure 4-60: Settings page with numeric keypad

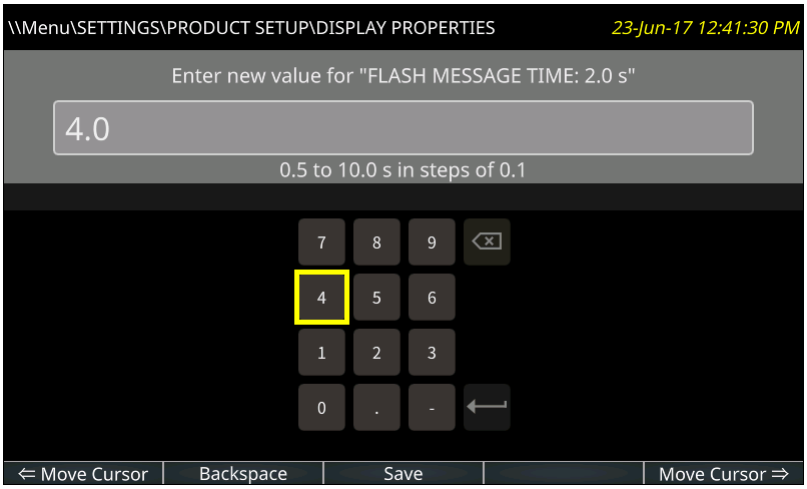

Press the **Save** Tab pushbutton, which does a range check on the value, saves the setting when valid, closes the page, and displays the previous page.

When a setting is not saved due to an invalid value, a message flashes, for example being out of range. In cases where the relay needs to be restarted for settings to take effect, the flash message advises.

Setting entry can be canceled without impact on the original value by pressing the **ESCAPE** or **Home** pushbutton.

Alphanumeric text

Settings that accept alphanumeric values display a keyboard. An example is a pushbutton name.

The **&123** key toggles between text and numbers.

The shift key (up arrow on keyboard) is green upon activation, while the keyboard letters switch to upper case. Double-click the shift key to lock capital lettering, or full capitals.

The globe key (shown greyed-out) toggles the keyboard language between English and another display language selected, for example between English and French. (The second language needs to be activated under **Settings > Product Setup > Display Properties**.)

For Japanese and Chinese, up to 10 characters can be input in a field, not 20.

To add accents, highlight a key and hold the **ENTER** pushbutton on the graphical front panel. Any special characters associated with the key display.

To avoid conflict with XML programming, do not enter the following characters on the Annunciator and Metering editor panels: " (quotation mark), ' (apostrophe), < (less than), > (greater than), & (ampersand). When used, the text following the character does not display or the Annunciator and Metering panels do not display on the graphical front panel.

Figure 4-61: Settings page with keyboard and accents

4.2.8 View actual values

4.2.8.1 Graphical front panel

In addition to data viewable in the **Actual Values** menu on the front panel, phasor diagrams and metered data can be displayed. The metered data can be arranged as a table.

The update rate of metered values is 500 ms.

A phasor page for each configured AC Source and up to five user-configurable metering pages can be displayed. The phasor pages are not configurable. Each phasor page shows a phasor plot and numerical values of all currents, voltages, and symmetrical components of a single AC source.

The Annunciator and Metering pages can be configured to display data. Each has a user-configured number of rows and columns. Each cell can include either configurable static text or the value of a selected FlexLogic operand, FlexAnalog operand, or actual value.

To display a metering page, press the **Home** pushbutton, then the **Metering** Tab pushbutton. The first metering page opens, with phasor pages listed before tabular pages. The Tab pushbuttons display any other metering page, as do the Up, Down, Left and Right pushbuttons. The current page is highlighted with a blue Tab pushbutton.

Each phasor page has a name, which consists of the value of the SOURCE NAME # setting appended with " Phasors." Phasor pages that have no configured CTs or VTs do not have a Tab pushbutton, and phasor pages that have no configured cells cannot be displayed.

Figure 4-62: Phasor display

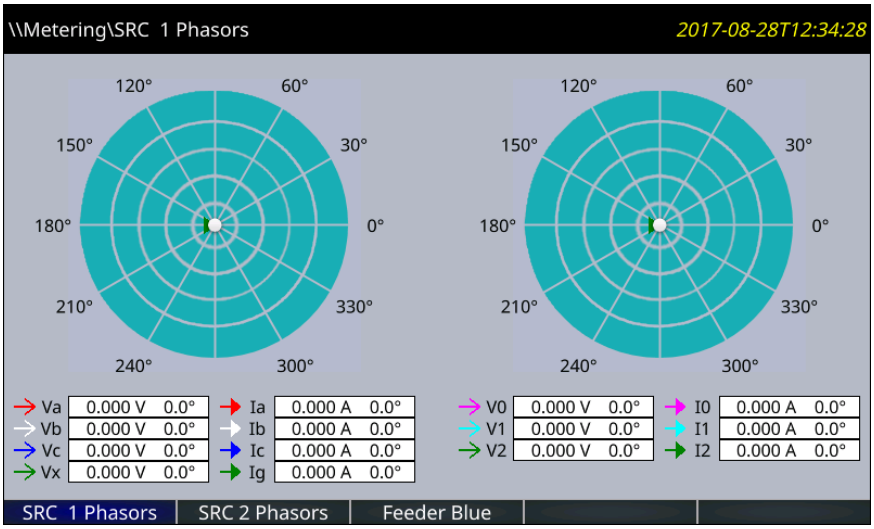

4

The configurable name displays in the header and Tab pushbutton label. Factory default names are Page 1, Page 2, and so on.

Figure 4-63: Metered actual values

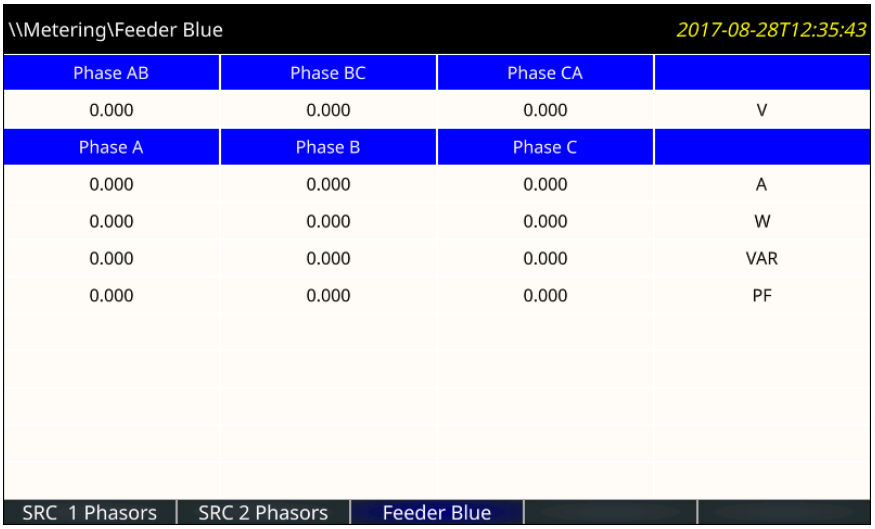

The phasor sources are configured under **Settings > System Setup > Signal Sources**. The tables to display the actual values are configured in the software under **Settings > Product Setup > Graphical Panel > Metering Editor**.

4.2.9 Breaker control

The N60 can interface with associated circuit breakers. In many cases the application monitors the state of the breaker, that can be presented on front panel LEDs, along with a breaker trouble indication. Breaker operations can be manually initiated from the front panel keypad or automatically initiated from a FlexLogic operand. A setting is provided to assign names to each breaker; this user-assigned name is for the display of related flash messages. These features are provided for two breakers; the user can use only those portions of the design relevant to a single breaker, which must be breaker 1.

It is assumed in the following discussion that the **SETTINGS** ⇨⇩ **SYSTEM SETUP** ⇨⇩ **BREAKERS** ⇨ **BREAKER 1(2)** ⇨ **BREAKER FUNCTION** setting is "Enabled" for each breaker.

4.2.9.1 Control mode selection and monitoring

Installations can require that a breaker be operated in the three-pole only mode (3-pole), or in the one and three-pole (1-pole) mode, selected by setting. If the mode is selected as three-pole, a single input tracks the breaker open or closed position. If the mode is selected as one-pole, all three breaker pole states must be input to the relay. These inputs must be in agreement to indicate the position of the breaker.

For the following discussion it is assumed that the **SETTINGS ⇨⇩ SYSTEM SETUP ⇨⇩ BREAKERS ⇨ BREAKER 1(2) ⇨⇩ BREAKER 1(2) PUSH BUTTON CONTROL** setting is "Enabled" for each breaker.

4.2.9.2 Front panel (user key) control

After the 30 minute interval during which command functions are permitted after a correct command password, the user cannot open or close a breaker via the keypad. The following discussions begin from the not-permitted state.

4.2.9.3 Control of two breakers

For the following setup example, the **(Name)** field represents the user-programmed variable name.

For this example, the relay is connected and programmed for both breaker 1 and breaker 2. The **USER 1** key performs the selection of which breaker is to be operated by the **USER 2** and **USER 3** keys. The **USER 2** key manually closes the breaker, and the **USER 3** key manually opens the breaker.

ENTER COMMAND PASSWORD	This message appears when the **USER 1**, **USER 2**, or **USER** 3 key is pressed and a **COMMAND PASSWORD** is required, that is, if **COMMAND PASSWORD** is enabled and no commands have been issued within the last 30 minutes.
Press USER 1 To Select Breaker	This message appears if the correct password is entered or if none is required. This message displays for 30 seconds or until the **USER 1** key is pressed again.
BKR1-(Name) SELECTED USER 2=CLS/USER 3=OP	This message displays after the **USER 1** key is pressed for the second time. Three possible actions can be performed from this state within 30 seconds as per the following items (1), (2) and (3).
(1) **USER 2 OFF/ON To Close BKR1-(Name)**	If the **USER 2** key is pressed, this message appears for 20 seconds. If the **USER 2** key is pressed again within that time, a signal is created that can be programmed to operate an output relay to close breaker 1.
(2) **USER 3 OFF/ON To Open BKR1-(Name)**	If the **USER 3** key is pressed, this message appears for 20 seconds. If the **USER 3** key is pressed again within that time, a signal is created that can be programmed to operate an output relay to open breaker 1.
(3) **BKR2-(Name) SELECTED USER 2=CLS/USER 3=OP**	If the **USER 1** key is pressed at this step, this message appears showing that a different breaker is selected. Three possible actions can be performed from this state as per (1), (2) and (3). Repeatedly pressing the **USER 1** key alternates between available breakers. Pressing keys other than **USER 1**, **2**, or **3** at any time cancels the breaker control function.

4.2.9.4 Control of one breaker

For this application, the relay is connected and programmed for breaker 1 only. Operation for this application is identical to that described in the previous section for two breakers.

4.2.10 Change passwords

The information in this section refers to password security. For information on how to set the password for the first time or change CyberSentry passwords, see the previous chapter or the Settings > Product Setup > Security > CyberSentry section in the next chapter.

The N60 supports password entry from a local or remote connection.

Local access is defined as access to settings or commands via the front panel. This includes both keypad entry and the RS232 port. Remote access is defined as access to settings or commands via any rear communications port. This includes both Ethernet and RS485 connections. Any change to the local or remote password enables this functionality.

When entering a settings or command password via EnerVista or any serial interface, the user must enter the corresponding connection password. If the connection is to the back of the N60, the remote password must be used. If the connection is to the RS232 port of the front panel, the local password must be used.

There are two user security access levels, setting and command, for which you can set a password for each. Use of a password for each level controls whether users can enter commands or change settings. Another option is to specify setting and/or command access for individual user accounts.

- **Setting** — Allows the user to make any changes to any of the setting values:
  - Changing any setting
  - Test mode operation
- **Command** — Restricts the user from making any settings changes, but allows the user to perform the following operations:
  - Operating the breakers via front panel keypad
  - Changing the state of virtual inputs
  - Clearing the event records
  - Clearing the oscillography records
  - Changing the date and time
  - Clearing energy records
  - Clearing the data logger
  - Clearing the user-programmable pushbutton states

To enter the initial setting or command password:

1. Press the **MENU** key until the **SETTINGS** header flashes momentarily and the **PRODUCT SETUP** message appears on the display.
2. Press the **MESSAGE** right arrow until the **ACCESS LEVEL** message appears on the display.
3. Press the **MESSAGE** down arrow until the **CHANGE LOCAL PASSWORDS** message appears on the display.
4. Press the **MESSAGE** right arrow until the **CHANGE SETTING PASSWORD** or **CHANGE COMMAND PASSWORD** message appears on the display.

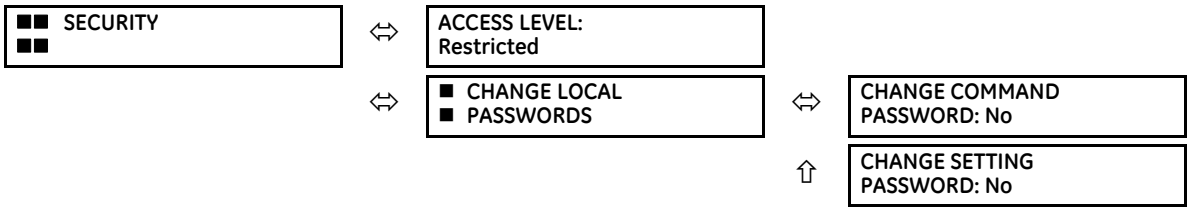

5. After the **CHANGE...PASSWORD** message appears on the display, press the **VALUE** up or down arrow to change the selection to "Yes."
6. Press the **ENTER** key and the display prompts you to **ENTER NEW PASSWORD**.
7. Type in a password and press the **ENTER** key.

8. When **VERIFY NEW PASSWORD** displays, re-type the password and press **ENTER**.

```
CHANGE SETTING
PASSWORD: No
```

```
CHANGE SETTING
PASSWORD: Yes
```

```
ENTER NEW
PASSWORD: ##########
```

```
VERIFY NEW
PASSWORD: ##########
```

```
NEW PASSWORD
HAS BEEN STORED
```

9. When the **NEW PASSWORD HAS BEEN STORED** message appears, your new Setting (or Command) password is active.

4.2.10.1 Resetting the password in a device without CyberSentry

EnerVista UR Setup

1. In **Settings > Product Setup**, click the **CHANGE** button for the **Command Password** or **Setting Password**.
2. The pop-up states "Password Status: Set", confirming that the user has previously set a password. Type "ChangeMe1#" in both the **New Password** and **Confirm Password** fields, and press **OK**.
3. If the device has not been logged into using the previously set password, a prompt will request that the previous password should be entered. Do this and press **OK**.
4. A message will appear confirming that this was a valid password - click **OK**.
5. A pop-up will now appear confirming "Password Status: Default" (i.e. the password is reset to the default "ChangeMe1#") and prompting for the new password. Type the new password, confirm it in the next field, then click **OK**.

Front panel

1. Press the **MENU** key until the **SETTINGS** header flashes momentarily and the **PRODUCT SETUP** message appears on the display.
2. Press the **MESSAGE** right arrow until the **ACCESS LEVEL** message appears on the display.
3. Press the **MESSAGE** down arrow until the **CHANGE LOCAL PASSWORDS** message appears on the display.
4. Press the **MESSAGE** right arrow until the **CHANGE SETTING PASSWORD** or **CHANGE COMMAND PASSWORD** message appears on the display.
5. After the **CHANGE...PASSWORD** message appears on the display, press the **VALUE** up or down arrow to change the selection to "Yes".
6. Type "ChangeMe1#" and press the **ENTER** key. This will clear the current password and make "ChangeMe1#" the password.
7. The display will prompt you to **ENTER CURRENT PASSWORD**. Type in a new password and press the **ENTER** key.

4.2.11 Invalid password entry

By default, when an incorrect Command or Setting password has been entered via the front panel three times within five minutes, the LOCAL ACCESS DENIED FlexLogic operand is set to "On" and the N60 does not allow settings or command level access via the front panel for five minutes.

By default, when an incorrect Command or Setting password has been entered via any external communications interface three times within five minutes, the REMOTE ACCESS DENIED FlexLogic operand is set to "On" and the N60 does not allow settings or command access via the any external communications interface for five minutes. The REMOTE ACCESS DENIED FlexLogic operand is set to "Off" after five minutes for a Command password or 30 minutes for a Settings password.

These default settings can be changed in EnerVista under **Settings > Product Setup > Security**.

4.3 Logic diagrams

Logic diagrams in this instruction manual provide an overview of function and settings. A logic diagram is based on

- Inputs-on the left side, which are setting and operands
- Logical gates, which is Boolean algebra to combine logical lines using AND, OR, NOT, and other gates to get a new logical state
- Logical operators, which are timers, one-shot operations, latches, and so on
- Outputs-on the right side, which are products of the manipulations with inputs, logical gates, and logical operators to produce new operands and define the output state of the element

True and false values are denoted by 1 and 0 respectively. A function usually is high/on/enabled when 1.

Reading from right to left in the following diagram, the TRIP BUS 1 OP and TRIP BUS 1 PKP FlexLogic operands on the right side are triggered when either the settings or reset latch in the middle of the diagram is triggered. When this applies, the TRIP BUS 1 OP operand is triggered after the delay set by the **TRIP BUS 1 PICKUP DELAY** or **TRIP BUS 1 RESET DELAY** setting, while the TRIP BUS 1 PKP operand initiates immediately. The settings or reset latch in the middle of the diagram is triggered as follows.

- For the reset, one of three conditions are required to meet the OR requirement shown at the bottom left. That is, the **TRIP BUS 1 LATCHING** setting must be 0=Disabled (which is negated by the NOT function to become 1=Enabled), output from the TRIP BUS 1 RESET FlexLogic operand must be 1, or output from the RESET OP FlexLogic operand must be 1.
- For the settings, one of 16 input conditions at the top left must be met for the OR, the **TRIP BUS 1 FUNCTION** must be Enabled, and the TRIP BUS 1 BLOCK output must output as 0, which is then negated/reversed by NOT to become 1.

Table 4-2: Logic diagram symbols

Symbol	Description
= Off	Output from FlexLogic operand, so user-defined
= Enabled	1 = Enabled and 0 = Disabled
OR	Any function input on the left side satisfies the condition
AND	All functions input on the left side are required to satisfy the condition
O	Not. Negates/reverses the output, for example 0 becomes 1.
●	Connection
S, R	Set, Reset
T_{PKP}	Timer pickup. Triggered by the settings latch in the diagram.
T_{RST}	Timer reset. Triggered by the reset latch in the diagram.

Figure 4-64: Logic diagram

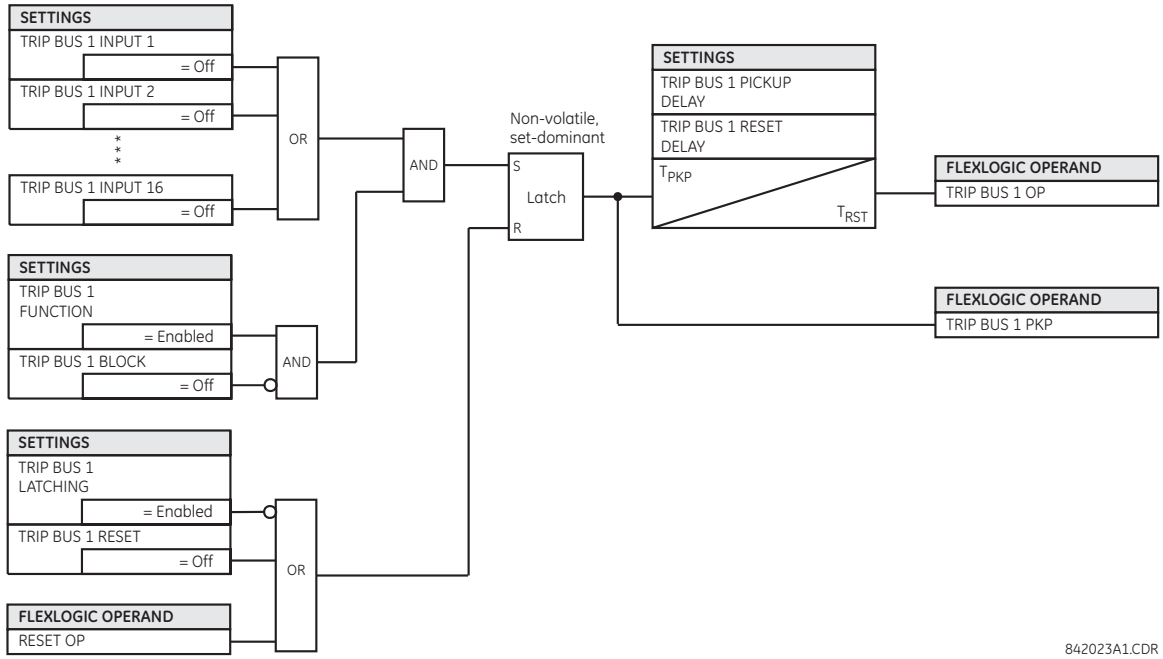

4.4 FlexLogic design using Engineer

The IED internally uses the FlexLogic equations. EnerVista Engineer provides a graphical way to design the logic. When the user presses "compile" in Logic Designer, the software converts the graphical logic into equations and updates the FlexLogic Equations.

There are two ways to create, edit and maintain the FlexLogic equations:

1. Using the FlexLogic Equation Editor available at **FlexLogic > FlexLogic Equation Editor**
2. Using the Logic Designer available at **Engineer > Logic Designer**

NOTE

EnerVista Engineer is *only* available through the offline window of the EnerVista UR Setup.
FlexLogic Equation Editor and Logic Designer are designed to be mutually exclusive as using them interchangeably to create, edit and maintain the FlexLogic equations may cause inconsistencies in the resulting equations. The user is recommended to use only one of the two methods throughout the process.

Parts of EnerVista Viewpoint Engineer software are integrated in the EnerVista UR Setup software. Engineer can be used to create and modify FlexLogic that is used by a device, such as to monitor output, monitor triggers, and create self-tests.

Features include

- Automatically displays existing FlexLogic
- Drag-and-drop interface
- Open multiple tabs and edit simultaneously
- Display symbols in IEC, ISO, or UR formats
- Export a diagram as BMP file or copy it to the clipboard for import into other applications
- Scale and print files in various paper sizes
- Works with all UR firmware versions

The figure shows an example where several inputs are used to trigger an output. With the OR function, any one of the inputs can trigger the output.

Figure 4-65: Inputs triggering output in Engineer

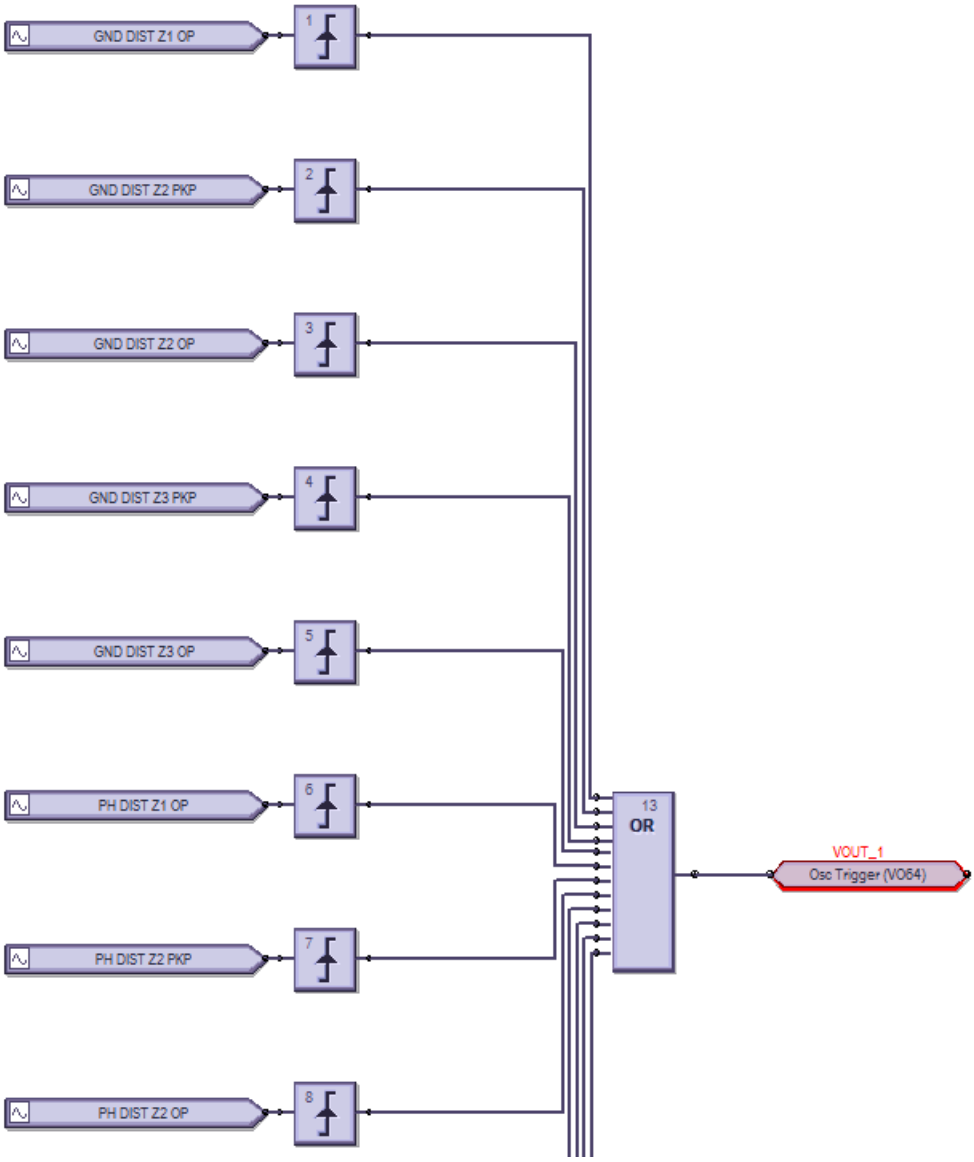

The process is as follows:

- Modify or create a logic diagram in the Offline Window area of the EnerVista UR Setup software
- Compile it and troubleshoot any errors
- The logic populates automatically into the FlexLogic Equation Editor
- Upload the file to the live device
- Monitor the output

This section explains how to use Engineer. It outlines the following topics:

- Design logic
- Send file to and from device
- Monitor logic
- View front panel
- Generate connectivity report
- Preferences

- Toolbars

4.4.1 Design logic

FlexLogic can be created with a block diagram. Note that although work is completed in the Offline Window area of the software, communication occurs with the online device, for example when switching to monitoring mode.

The following procedures are outlined:

- Examples
- Add existing FlexLogic equations
- Create a logic diagram/sheet
- Rapidly add logic blocks in sequence
- Connect two logic diagrams/sheets
- Optimize the logic
- Change logic order
- Search logic
- Exclude sheet from compile

4.4.1.1 Examples

The symbols are displayed in the UR format.

Create oscillography trigger every three minutes

Figure 4-66: Three-minute timer turns on LED for 10 seconds

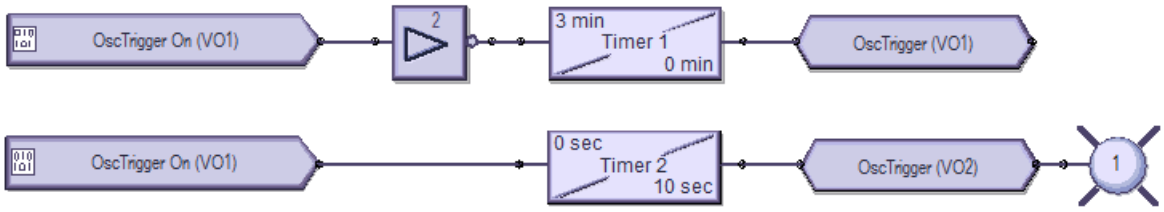

Preparation — Under **Settings > Inputs/Outputs > Virtual Outputs**, the first and second virtual outputs are named OscTrigger

Top logic — Three-minute timer trigger

Bottom logic — Turn on LED 1 for 10 seconds when the trigger starts

Create data logger trigger every seven minutes

Figure 4-67: Seven-minute timer turns on LED for 10 seconds

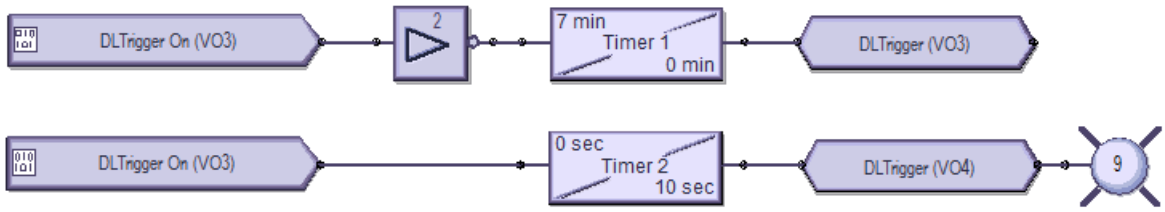

Preparation — Under **Settings > Inputs/Outputs > Virtual Outputs**, virtual outputs 3 and 4 are named DLTrigger

Top logic — Seven-minute timer trigger

Bottom logic — Turn on LED 9 for 10 seconds when the trigger starts

Create events every minute, then every 100 ms

Figure 4-68: One-minute timer turns on LED and creates events every 100 ms

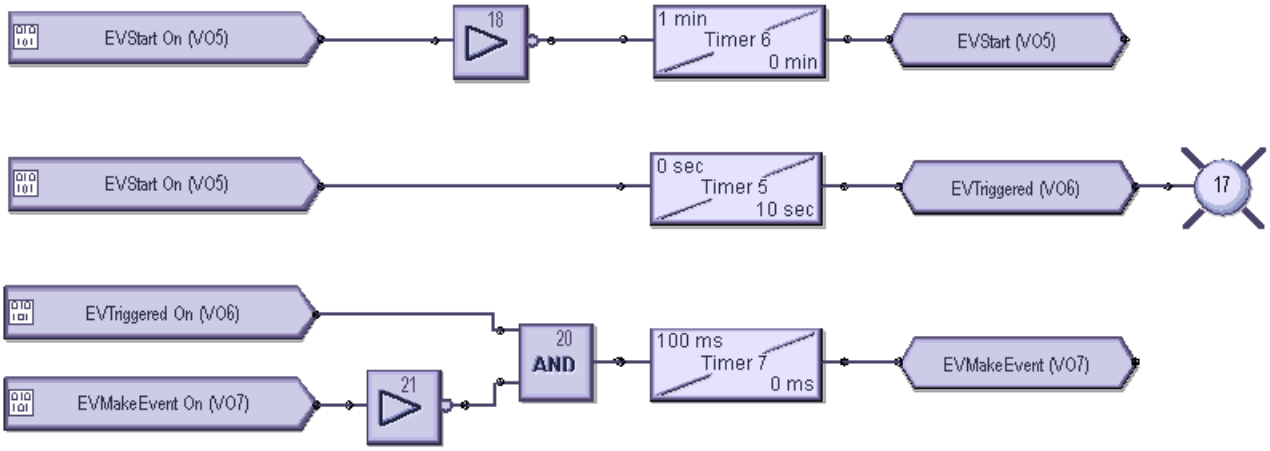

4

Preparation — Under **Settings > Inputs/Outputs > Virtual Outputs**, virtual output 5 is named EVStart, 6 is named EVTriggered, and 7 is named EVMakeEvent

Top logic — One-minute timer trigger

Middle logic — Turn on LED 17 for 10 seconds when trigger starts

Bottom logic — Create events at 100 ms intervals for the same 10 second period

4.4.1.2 Add existing FlexLogic equations

A logic diagram can be created using existing FlexLogic equations (this section) or by creating new ones (next section).

NOTE

FlexLogic Equation Editor and Logic Designer are designed to be mutually exclusive as using them interchangeably to create, edit and maintain the FlexLogic equations may cause inconsistencies in the resulting equations. The user is recommended to use only one of the two methods throughout the process.

To create a logic diagram using existing FlexLogic equations:

1. In the Offline Window area, modify the FlexLogic for the device under **FlexLogic > FlexLogic Equation Editor**. If the device is not listed, right-click the device in the Online Window area and select the **Add Device to Offline Window** option.

   Upon saving the modified FlexLogic, a yellow icon appears for the device in the Offline Window area to indicate that the logic differs from the Online device.
2. In the Offline Window area, access **Engineer** for the device, then **Logic Designer**. The logic opens.
3. Click the **Edit > Auto Populate Workbook** menu item. If the software prompts if you want to keep or discard existing sheets, either is acceptable, with the older excluded sheeted being denoted by brackets, such as < Sheet 1 >. The logic displays in the various tabs. The FlexLogic created in the equation editor appears in Sheet 1, for example.

4.4.1.3 Create logic diagram

Upon access of the Logic Designer, the FlexLogic equations of the device display. You can create new logic in new sheets or modify the ones that display.

This procedure uses input / output logic as an example.

1. In the Offline Window area, access **Engineer** for the device, then **Logic Designer**. If the device is not listed, right-click the device in the Online Window area and select the **Add Device to Offline Window** option.

Figure 4-69: Access Engineer in the Offline Window area

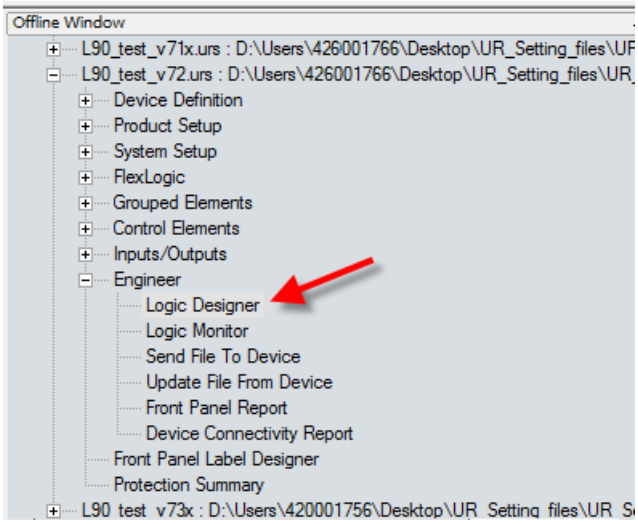

A default block diagram opens that shows 48 inputs (boxes) and 48 user-programmable LEDs (circles).

For the graphical front panel, no LEDs can be added to the window and the LEDs are removed when opening any existing files. For these existing files with the LEDs removed, save the file without them.

Figure 4-70: Default view of FlexLogic designer

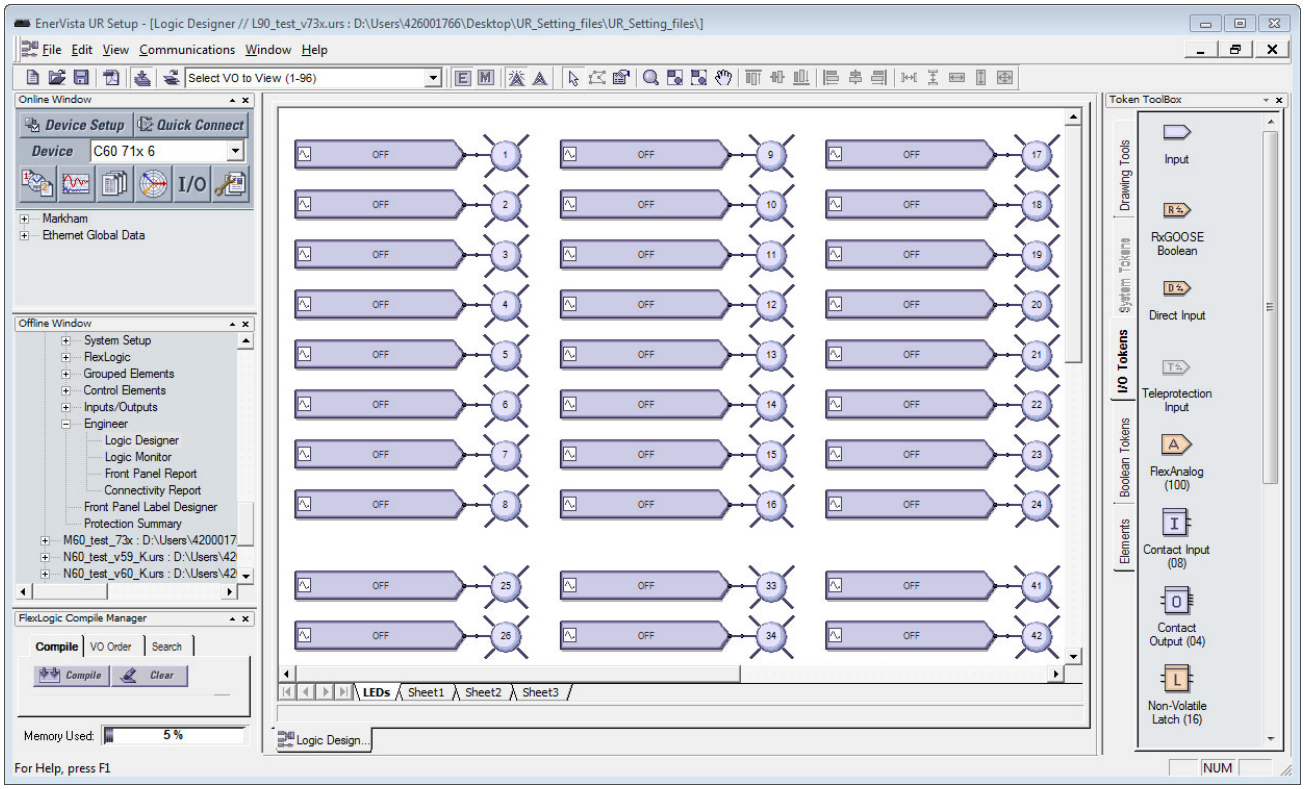

2. Optionally delete the default logic diagram by right-clicking its tab at the bottom of the window and selecting **Delete**.
3. To add a blank sheet, click **Edit > Add Sheet**. A new tab displays. Or use the last tab displayed, which is a blank sheet.
4. Optionally right-click the new tab and **Rename** it.
5. Add the input blocks to the logic diagram. For example, click the **I/O Tokens** tab on the right, click the **Input** element,

then click in the logic sheet to add it. Or drag-and-drop it.

6. Double-click the block on the sheet to configure it, selecting from the two drop-down lists. The figure shows that virtual input 61 is being added. The **View Associated Screen** button opens its settings window.

Figure 4-71: Configuring an input block

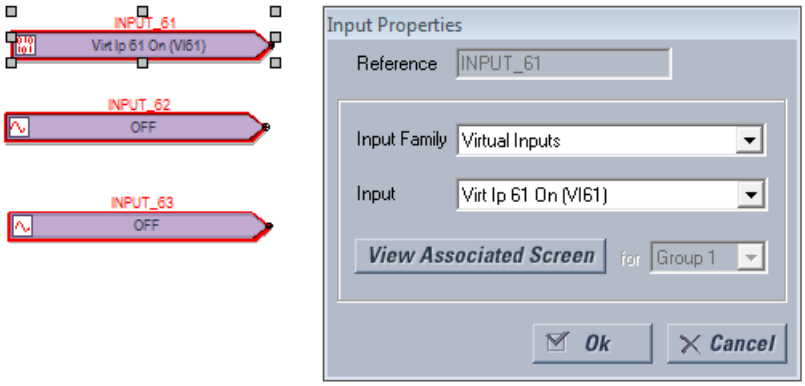

7. Add the output blocks to the logic diagram. For example, click the **I/O Tokens** tab, click the **Virtual Output** element, then click in the logic sheet to add it. Double-click the block on the sheet to configure it. For the name, make it unique. The figure shows virtual output 61 is being added, with a suffix of "io" added to the name to make it unique. Note that the outline color of a block is red until it is configured, and that this properties window varies by block and the selectable options by order code.

Figure 4-72: Configuring an output block

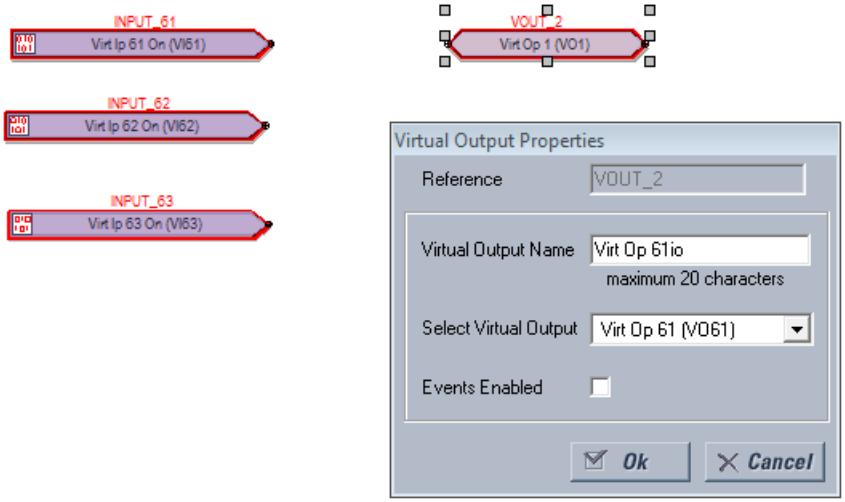

8. Connect the input blocks to the output blocks by drawing a line as follows. Click at the end of one block and drag the line to the next block. Or click the **Drawing Tools** tab, then select the **Line** option. The cursor needs to be at the connection point to end the line, not elsewhere on the block. Note that the outline color is no longer red on the blocks.

Figure 4-73: Completed inputs and outputs

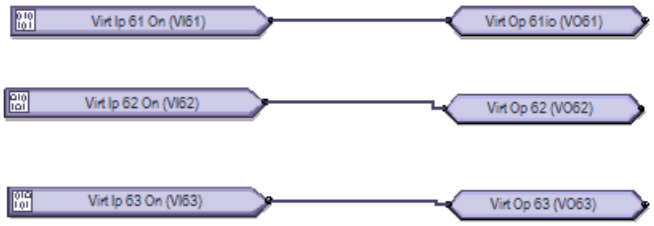

9. Add any remaining blocks or information. Right-click a block to copy and paste it. Notes are as follows.

   Add a text box — Drawing Tools > Text

   Add a FlexElement — Elements > FlexElement. An analog input is expected where a small arrow head shows in the box.

Figure 4-74: FlexElement accepts analog inputs on left side where arrow heads display

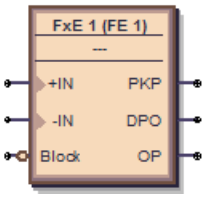

Add an Element — **Elements** tab. Available elements reflect the product, for example the **Control Elements** category.

Figure 4-75: Elements reflect Control Elements

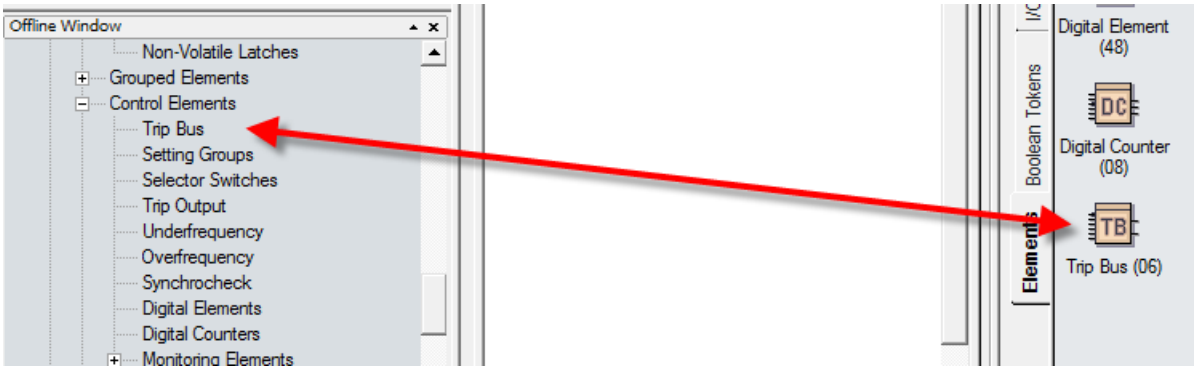

10. Check for any blocks that have a red outline. These are invalid. Fix them before continuing, for example by configuring them.
11. Compile the logic diagram to check for errors by clicking the **Compile** button at the bottom left or by pressing the **F7** key.

    If prompted about a message about sorting, click **Yes** to apply the default (for this example), which can be automatic sorting based on an algorithm that applies fastest execution time.

    With successful compiling, the file is saved and the FlexLogic equations populate automatically. Scroll up through the compile messages, with the red errors being the only messages that require fixing before proceeding.

    The figure shows that we forgot to add the "Io" suffix to the names of virtual outputs 62 and 63, as indicated by "Warning: Virtual output xx using default name." This warning is a minor warning.

    The warning "input using disabled feature" means that input needs to be enabled. Double-click the block, click the **View Associated Screen** button, enable the setting, save, and recompile.

    The output and messages are explained in the next section.

Some information displayed in the compile messages updates automatically, for example messages after a device is unplugged.

Figure 4-76: Compile and check the logic

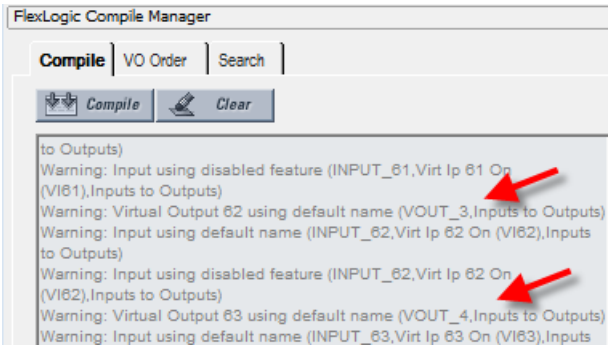

12. View the FlexLogic equations by navigating in the Offline Window area to **FlexLogic > FlexLogic Equation Editor**. The window opens with the entries displayed in the next tab.

4

Figure 4-77: Logic displayed in FlexLogic Equation Editor

FLEXLOGIC ENTRY	TYPE	SYNTAX
View Graphic	View	View
FlexLogic Entry 1	Virtual Inputs On	Virt Ip 61 On (VI61)
FlexLogic Entry 2	Assign Virtual Output	= Virt Op 61io (VO61)
FlexLogic Entry 3	Virtual Inputs On	Virt Ip 62 On (VI62)
FlexLogic Entry 4	Assign Virtual Output	= Virt Op 62io (VO62)
FlexLogic Entry 5	Virtual Inputs On	Virt Ip 63 On (VI63)
FlexLogic Entry 6	Assign Virtual Output	= Virt Op 63io (VO63)

13. Save the work.

The logic diagram has been created and the FlexLogic equations populated. The next steps are to upload the file to the device and to monitor the device.

4.4.1.4 Compiled results and warning messages

When a yellow caution symbol displays in the Offline Window area, it means that the settings file is not synchronized with the online device. Right-click the device in the Offline Window area, and select the **Update SCL files** option. SCL refers to the Substation Configuration Language. An Instantiated IED capability description (IID) file is an example of an SCL file and contains the actual settings on a UR device.

Figure 4-78: Settings files not synchronized between offline and online files

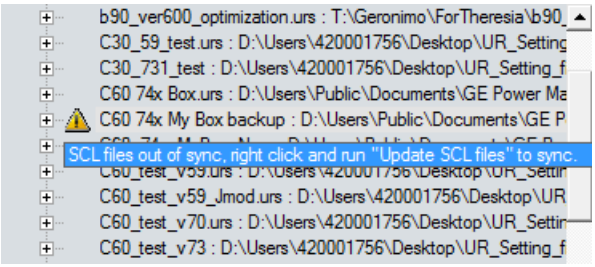

When the **Update SCL files** option is selected, the CID and IID files in the device folder are updated by the user configuration in the IEC 61850 panel and thereby become synchronized. The CID file and the IID file (depending on the preference 'Do not update IID file when updating SCL files') are updated. If the CID file is not already there, it is generated.

The location of these files is C:\ProgramData\GE Power Management\urpc, for example, in the Offline and Online folders. Any FlexLogic equations entered in the Offline Window area are erased. The logic drawn in the Logic Designer window in Engineer in the Offline Window area remain. The warning icon disappears after updating.

The following information is contained in the compile window.

Figure 4-79: Compiled results

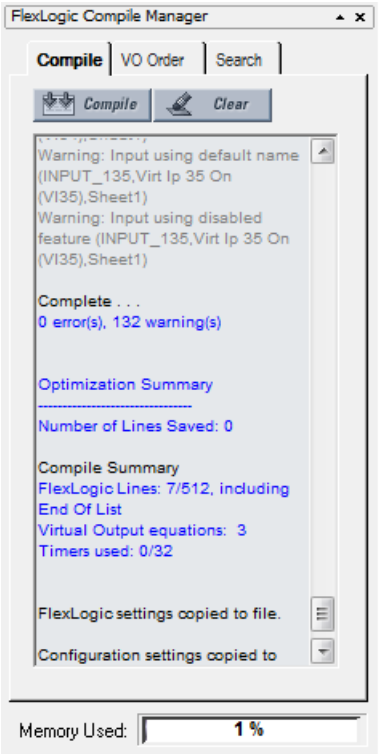

Number of Lines Saved — The number of compiled logic lines eliminated by using the optimization algorithm, as set in the **Optimize Compiled Output** option of the Preferences. In the example shown, no lines were saved because the optimizer is disabled.

FlexLogic Lines — The number of lines that the compiled logic uses, for example seven of 512 available.

Virtual Output equations — The number of FlexLogic equations used in the Logic Designer window.

Timers used — The number of timers used in the Logic Designer window.

Memory Used — The percent of memory used in the Logic Designer window.

Errors

Table 4-3: Errors from compiling

Category	Block or gate affected	Message	Description
Error	All	Number of lines (nnn) exceeds maximum limit of 512	The compiled result exceeds the limit of 512. Reduce the number of equations to 512 or less.
Error	Tag-In	Tag-in not configured (TAG_ID, SheetReference)	A Tag-In is connected to a circuit but the Tag-In is not referencing an existing Tag-Out
Error	1 Shots	One Shot is over limit (SYMBOL_ID, SheetReference)	The number of One-Shots contained within all of the VO blocks has exceeded the maximum allowed for the firmware revision. This value can either be 0 or 32.
Error	=VO	VO has no inputs (VO_ID, SheetReference)	A Virtual Output block is located within the FlexLogic diagram and there is no block connected as input to it. Connect and identify the inputs.

Category	Block or gate affected	Message	Description
Error	Timer	Timer used more than once (TIMER_ID, SheetReference)	The same timer is used in more than one place in the editor. This means either the circuit that the Timer belongs to has been branched, or the Timer has been duplicated.
Error	Input	Unrecognized Parameter (SYMBOL_ID,Name,SheetReference)	An Input symbol is configured to an item that is not recognized by the current order code and version. Possible cause: The order code and/or version of the settings file was converted causing the input parameter to become unavailable.

Warnings

When using the 'Reset OP' operand, a warning can appear indicating that this is a disabled feature. This means that the Reset Settting's FlexLogic operand is set to OFF. Resetting of the relay can be done by pressing the reset button on the front panel of the relay or by sending a Reset command through communications.

Table 4-4: Warning messages from compiling

Category	Block or gate affected	Message	Description
Minor warning	Input	Input set to unused VO (SYMBOL_ID,Name,Sheet)	An Input symbol is using an unassigned Virtual Output
Major warning	Tag-Out	Tag-out not connected (TAG_ID,Sheet)	A Tag-Out symbol has no input
Major warning	All	Symbol not connected (SYMBOL_ID,Name,Sheet)	A symbol's input and/or output is not connected and is not part of a VO block. Draw the input and/or output to the block.
Minor warning	=VO	Virtual Output n using default name (VO_ID,Sheet)	The Assigned Virtual Output is using the default name. Change the name.
Minor warning	Input	Input using default name (SYMBOL_ID,Name,Sheet)	An Input symbol is using a Contact Input, Contact Output, Digital Element, FlexElement, or Digital Counter set to the default name. Change the name so that it is unique.
Setting warning	Input	Input using disabled feature (SYMBOL_ID,Name,Sheet)	An Input symbol is using a disabled Virtual Input, Contact Input, Digital Element, FlexElement, Digital Counter, Control Pushbutton, Programmable Pushbutton, Contact Output, or Protection/Monitoring Element. Enable it and try again.
Major warning	Input	Input set to OFF (SYMBOL_ID,Sheet)	An Input symbol is set to OFF
Major warning	Input	Input set to ON (SYMBOL_ID,Sheet)	An Input symbol is set to ON
Setting warning	Input	Contact Output Operate is OFF (SYMBOL_ID, Contacts)	The symbol block is using the default setting of OFF
Setting warning	Input	Contact Output Seal-In is OFF (SYMBOL_ID, Contacts)	The symbol block is using the default setting of OFF

4.4.1.5 Rapidly add logic blocks in sequence

Blocks are added by clicking an element then clicking in the drawing area, or by dragging and dropping the element onto the canvas. Blocks can be added rapidly in sequence, for example when you have inputs 1 to 10, without having to select the element each time.

1. In Engineer, click **File > Preferences**. The window opens.
2. Click the **Editor** entry.
3. Enable the **Repeat Symbol** check box.
4. Click the **Ok** button to save and exit from the window.
5. In the logic diagram, select an element, then click in the drawing area to add it, click again to add a second box, and so on.

4.4.1.6 Connect two logic diagrams

When the logic is complex and requires two sheets, for example, these two sheets can be connected. By connecting them, the logic is continuous from one sheet to the next.

1. In the first sheet, click the **I/O Tokens** tab.
2. Scroll to the bottom, and click and drag the **Tag Out** element to the sheet where the next sheet is to connect.
3. Double-click the element and in the window that opens, give it a name, such as "To Sheet 2" or "To IO Sheet 2."

Figure 4-80: Connecting sheet 1 to sheet 2

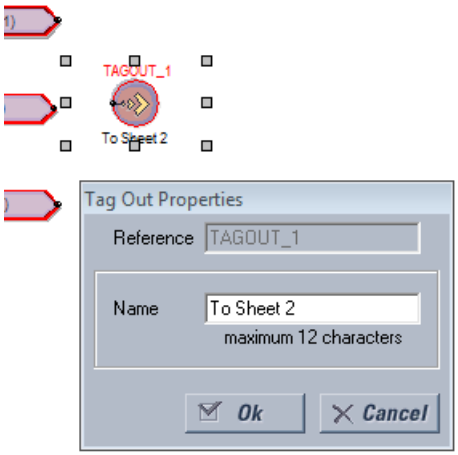

4. In the second sheet, click and drag the **Tag In** element to the sheet where the first sheet is to connect.
5. Double-click the element and in the window that opens, select the first sheet from the drop-down list to connect the two sheets.
6. Save the work.

4.4.1.7 Optimize the logic

The number of available FlexLogic entries depends on firmware, for example 515 or 1024 lines. The software can automatically optimize a logic diagram to reduce space and free up entries.

1. In Engineer, enable the optimization check box in the **Compile** tab. With this option enabled, the software automatically optimizes a logic diagram to reduce space and free up FlexLogic entries.
2. Run the compiler by clicking the **Compile** button. The number of saved lines displays in the Optimization Summary. Changes also display when the FlexLogic Equation Editor is accessed. The logic diagram does not change. In the example shown, no lines were saved to free up space.

Figure 4-81: Code optimization results

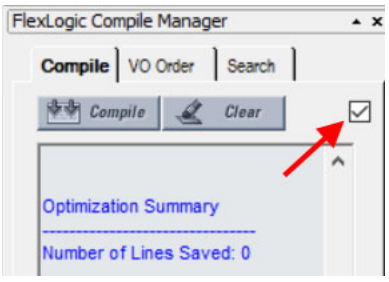

4.4.1.8 Change logic order

The order in which the FlexLogic is populated in the FlexLogic Equation Editor window depends on settings.

First, when automatic sorting is not enabled, the sequence in which the blocks were drawn is followed.

Second, the order in which equations are executed can be manually changed, as outlined here.

Third, automatic sorting can be set in preferences, as outlined here. It is enabled by default and means that an algorithm is implemented to give best results and quickest performance, For example, the block with the fastest execution time is entered first in the FlexLogic. When two block functions have the same execution time the block drawn first displays first in the FlexLogic. For example, drawing input 61 to output 61, then input 62 to output 62 causes the input/output 61 to be entered into the FlexLogic first. Automatic sorting takes precedence over manual sort; if you enable this option, manual sorting is not implemented.

To manually change logic order:

1. In the compile area, click the **VO Order** tab.
2. If the window is blank, click the **Refresh** button.
3. Select an entry and click the up or down arrow. To cancel any manual changes, click the **Sort** or **Refresh** button.
4. Recompile. The change is not executed or saved if automatic sorting is enabled.

Figure 4-82: Ordering FlexLogic entries

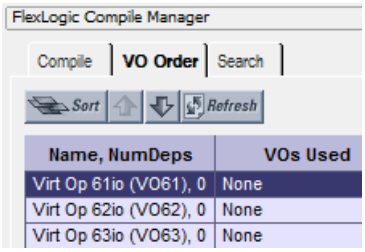

To set automatic sorting:

1. In Engineer, under **File > Preferences**, select the **Compiler** option. The **Automatically Sort VOs** option means that the block with the fastest execution time is entered first in the FlexLogic. When two block functions have the same execution time the block drawn first displays first in the FlexLogic. For example, drawing input 61 to output 61, then input 62 to output 62 causes the input/output 61 to be entered into the FlexLogic first.

4.4.1.9 Search logic

Items that can be searched in a logic diagram include gates, Input, Contact Input, Contact Output, Timer, Virtual Output, Tag In, Tag Out, and User-programmable LED. A search can be performed while designing or monitoring.

1. In the compiler area of Engineer, click the **Search** tab.
2. Use one of the following methods to set search criteria:
   - Select an element from the first drop-down list. Results display automatically.
   - Type in the second text string box, or select any of the 32 previous searches from the drop-down list. Click the **Search** button. Any results display.

   The search applies to all tabs, not just the active tab.
3. Double-click a search result to view the item.

Figure 4-83: Search function

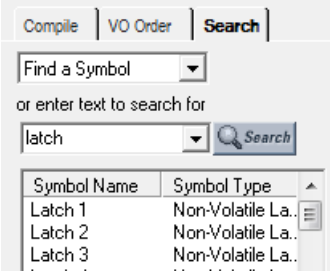

NOTE

You can also select an element from the drop-down list on the toolbar. It is then highlighted in the logic diagram.

4.4.1.10 Exclude sheet from compile

While designing the FlexLogic equations, entire sheets can be removed from the compile logic. This allows the user to test various schemes by placing schemes on separate sheets and including either sheet at compile time.

1. In the Logic Designer window, right-click the tab and select the **Exclude from Compile** option so that the check mark displays. When sheets are excluded, a message displays with each compile that "excluded sheets will not be reflected in the RPN." An excluded sheet is denoted with end brackets, similar to < Sheet 1 >.

Figure 4-84: Excluding a tab from compiling

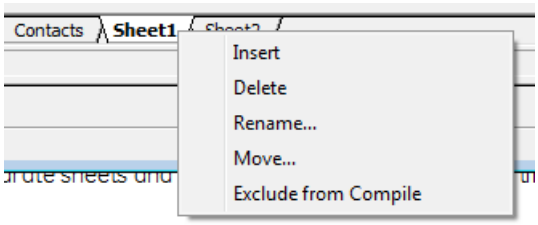

Figure 4-85: Tab excluded from compiling

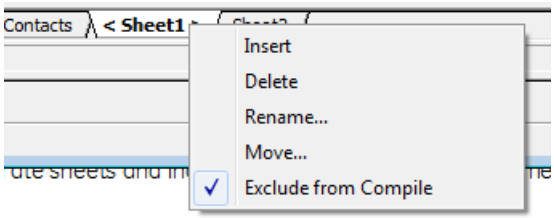

4.4.2 Send file to and from device

With the logic diagram created, compiled, and errors eliminated, the FlexLogic can be sent to a live device. And, conversely, a file from a live device can be added to the Offline Window area for additional work.

To send a file to a device:

1. In the Offline Window area of the software, right-click the device name and select the **Write Settings to Device** option. A prompt can appear that the URS file has been repaired; acknowledge the message.
2. When a window opens, select the device to which you want to send the file, then click the **Send** button and confirm. The order codes and IEC 61850 edition must match. The file is sent to the live device. Any errors can be viewed in the log file at the prompt.

To import a file from a device:

1. Close all open files in Engineer that relate to the device, else a message displays to that effect, for example to close the FlexLogic view associated with the file. When the file is not associated with a live device, a message displays to that effect; you need to identify the device to which you want to send the file. The order codes must match.
2. Right-click the device in the Online Window area and select the **Add Device to Offline Window** option. After you enter a name for the file, it is written to the Offline Window area.

4.4.3 Monitor logic

After creating the logic diagram, validating it, and uploading the FlexLogic to a device, the results from the device can be viewed.

The following checks are performed automatically when switching from design to monitoring, and prompts display when necessary:

- Verify that the order code of the linked relay matches the settings file
- Verify that the version of the linked relay matches the settings file
- Verify that the FlexLogic Equation Editor of the linked relay matches the settings file. Solution: Compile the FlexLogic logic diagram and send the settings file to the relay.
- Verify that the FlexLogic Timers of the linked relay match the settings file. Solution: Compile the FlexLogic logic diagram and send the settings file to the relay.
- If the settings file contains a serial number lock, then verify that the serial number of the linked relay matches the settings file

To view results:

1. In the Offline Window area of the software, expand the **Engineer** entry for the device.
2. Double-click the **Logic Designer** entry and **Compile** the logic.
3. Double-click the **Logic Monitor** entry, or click the **M** button in the toolbar at the top of the window. With successful launch, the logic displays and a green indicator displays at the bottom of the tab.

   When the file is not associated with a live device, a message displays to that effect; you need to identify the device to which you want to send the file. The order codes must match between the Offline Window and the Online Window.

   When the device is offline, a message indicates problems communicating with the device.

   When the devices are not synchronized, a message indicates the FlexLogic does not match the settings file. To send the offline file to the device, right-click the device name and select the **Write Settings to Device** option.

   When the state of a symbol is OFF, the symbol is shown in the default color or no color.

   When a symbol's state changes to ON, the symbol and connection line turns green.

   The state of some symbols can either be unknown or the state transitions faster than the update interval. For these two cases, the state of the symbol is considered 'UNKNOWN' and the symbol is outlined in red.

   The colors for the ON and Unknown state can be customized in the Preferences.

   The figure shows that the software is communicating with devices (square green indicator) and that a minor error is present (green box outline). In this case, the battery is weak and needs to be replaced. This can be viewed as the Replace Battery message on the front panel of the device and in the EnerVista software under **Actual Values > Front Panel > Front Panel** or **Display/Keypad**.

Figure 4-86: Monitoring a device, with minor error caused by weak battery

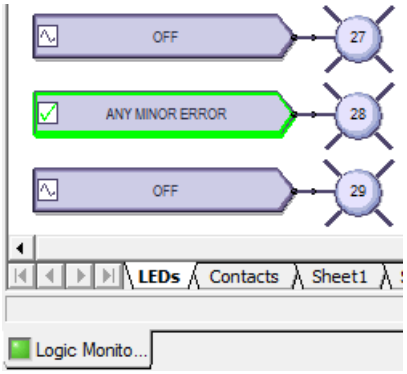

4.4.4 View front panel and print labels

This window displays the LEDs that are on the front panel. You can create labels and print them for the device. You do not use the window to add text labels and upload them to the device. Custom labelling is also outlined earlier in this chapter; see the Front Panel Labelling section.

To view the front panel:

1. In the Offline Window area of the software, expand the **Engineer** entry for the device.
2. Double-click the **Front Panel Report** entry. The report displays. The Device Summary is read from the settings file and cannot be changed. The LEDs and pushbuttons display below the summary.
3. To save the report, click **File > Save As**, enter a file name, and select the front panel report (FPR), JPG, or PDF format.

Figure 4-87: Front panel display in Engineer

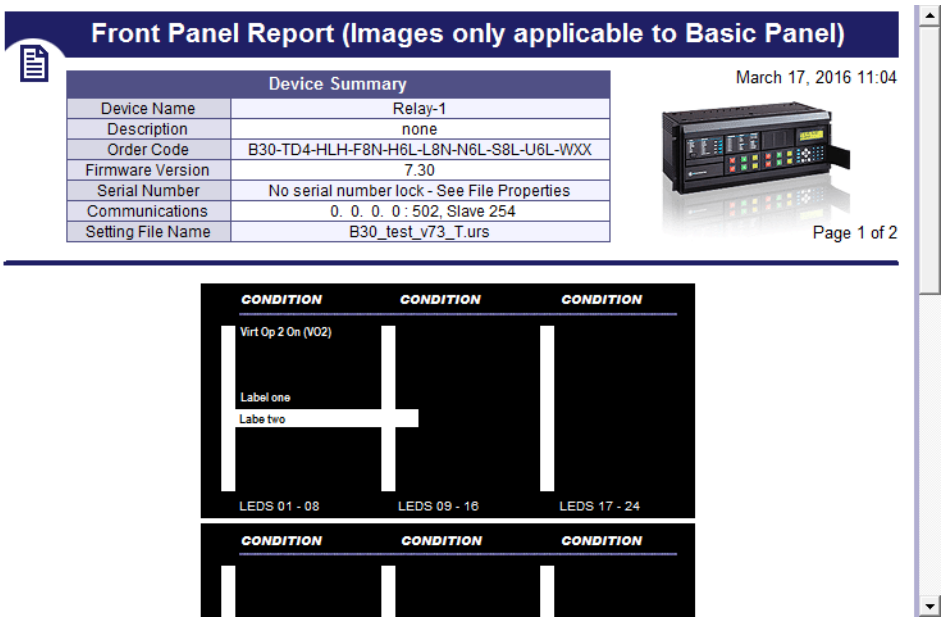

To print labels:

1. In the **Front Panel Report** window, double-click an LED or pushbutton and enter text.
2. To print the labels, click the **Print** icon on the toolbar.
3. To save the report and labels, click **File > Save As**, enter a file name, and select the FPR, JPG, or PDF format.
4. Use the instructions in the second tab of the window to add the labels to the physical device.

4.4.5 Generate connectivity report

This report displays basic information about a device, such as order code, port numbers, inputs and outputs. You can use it to create a PDF file of basic information. The report is based on CID and/or IID files, and not the system or full SCD. All device details including Remote Inputs, Remote Outputs, and Analog Inputs/Outputs are indicated, including quantities used and available.

To display a device report:

1. In the Offline Window area of the software, expand the **Engineer** entry for the device.
2. Double-click the **Device Connectivity Report** entry. The report displays.
3. To save as a PDF file, click **File > Save As**.

Figure 4-88: Device Connectivity Report

Device Connectivity Report

Device Information

Filename / Device Name	Order Code / Revision / Serial Nr.	File Details
D30_test_v73.urs Relay-1	D30-U03-HLH-F8L-H6L 7.3x No serial number lock - See File Properties	Size: 2683 KB Last Modified Date: 15.11.2016 23:29:41 Path: D:\Users\ \Desktop\UR_Setting les\UR_Setting_files\D30_test_v73\

Device Details

Physical Ports Available	Port Settings	Services / Protocols
RS232	RS232 Baud Rate: 115200	DNP 3.0
RS485	RS485 Baud Rate: 115200	IEC 60870-5-104
2 * 100BaseFX Eth, Multimode, SFP with LC	Port1 IP: 3. 94.244.210	IEC 61850
1 * 100BaseT Eth, Multimode, SFP with RJ-45	Port2 IP: 127. 0. 0. 1	EGD

4.4.6 Preferences

Preferences determine functionality. As such, you are encouraged to review them. This section outlines some options available in the menus and preference panels.

Access them in the **Logic Designer** panel under the **View** menu and under **File > Preferences**. The Logic Designer and Logic Monitor preferences are outlined here, not all preferences for a device.

4.4.6.1 View menu

View > Toolbar > Advanced Actions — Active when in Logic Designer. Toggles a toolbar to nudge, rotate, flip, or change the order of an element.

View > Show Unused Pins — Enable to display unconnected pins. Disable to eliminate unconnected pins from the view, for example when printing.

Figure 4-89: Unused pins on and off

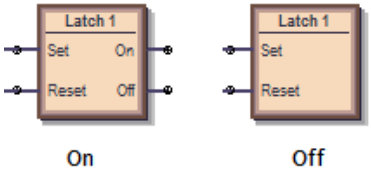

4.4.6.2 Logic designer

The path is **File > Preferences > Logic Designer**.

Workbook Setup

Size and Units

Size and Units — Changes the size of diagram area displayed in Engineer. If you set the size to be smaller than an existing logic diagram, the content is cut off.

WorkBook

Print Scale — The scale for logic diagram when printing. Scaling a large diagram to 200 percent, for example, results in the diagram being cut off.

Orphan Protection — When enabled, the printing output prevents Virtual Output circuits from spanning more than a single page. The largest Virtual Output circuit is scaled to fit on a single page and all remaining Virtual Output circuits are scaled so that all circuits are printed using the same scale.

Show Title Block — When enabled, places an information box at the bottom right of the diagram when printing. Enter the information in the **File Information** panel.

Show Sheet Name — When enabled, shows Sheet 1, Sheet 2, or any other name at the top of the logic diagram when printing.

Start Sheet On New Page — Places the sheet on the next page when printing.

Show Notes Selection — When other than None, prints the text from any information notes added to the document (under **Drawing Tools** tab > **Note**). The text is printed after the logic diagram.

File Information

The text entered here displays at the bottom right of a diagram when printing, provided that the **Show Title Block** option is enabled. Note the option to change the logo from the GE logo to your company logo.

Display

The panel sets how the element boxes display. The figure shows how an AND gate displays when the UR default, IEC, or ISO symbol type is selected.

Figure 4-90: AND gate varies by standard selected

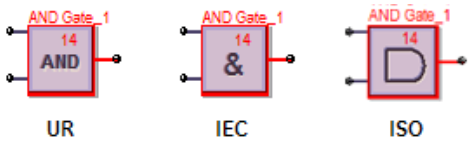

Symbol Style — IEC, ISO, UR Setup — Sets how the gates display in the logic diagram.

Symbol Color — When set to Black & White, only logic blocks with issues continue to display red.

Zoom Operation — Determines what happens when the **View > Zoom** functions are used. When set to Sheet Only and the zoom is changed, the single tab changes. When set to Workbook, all tabs change.

Editor

Repeat Symbol — Enable this feature to add element blocks rapidly in sequence, for example when you have inputs 1 to 10, without having to select the element each time. Select the element block from the toolbox, click the diagram, then continue to click to add additional blocks.

Use first available VO / Timer — When enabled and you copy and paste a virtual output or timer element, the numbering continues in sequence. For example, you copy timer 5 and paste it as timer 6. When disabled and you copy and paste a virtual output or timer element, the same number is used. For example, you copy timer 5 and paste it as timer 5.

Auto-Save Logic Designer every x minutes — Logic diagrams with changes are saved automatically according to this interval. The range is 5 minutes (default) to 30 minutes. With auto-save, the file extension of the saved file is .auto. This file remains until you save the file manually.

Auto Populate

These options work in the **Edit > Auto Populate Workbook** function.

VOs per Worksheet — When an existing settings file is opened in the Logic Designer, the Logic Designer populates the canvas and attempts to evenly distribute the Virtual Output circuits across multiple sheets. A value of 100 in this setting places all FlexLogic equations on a single sheet until there are 100, then the next ones are placed on another sheet. A value of 1 places each Virtual Output circuit on a separate sheet.

Show / **FlexLogic Merge** / **Show Unused** — If Show Contact Outputs and Show LEDs are selected, for example, the function places Contact Output and User-programmable LED symbols for settings that are configured. If you disable the LED check boxes, then the LED tab/sheet does not display when you next open the Logic Designer window. The settings apply to all products, not just the active window when it is next opened. Close then reopen the Logic Designer window for the setting to take effect.

Compiler

Show Warnings — Options to filter the messages that display when logic compiles.

Minor — Enable to display minor errors. An example is using the default values of an element added to the diagram, such as the name of the element. An example is "Warning: Virtual output xx using default name," for which you simply click into the element to rename it.

Major — Enable to display major errors. Examples are an input that does not have a corresponding output, using disabled features, and failing to connect a symbol. Fix these errors.

Setting — Enable to display error message related to settings, such as an improperly configured setting, such as using ON or OFF.

Automatically Sort VOs — When enabled, the logic is compiled with an algorithm to give best results and quickest performance, for example the fastest logic first. The fastest logic displays in the FlexLogic Equation Editor output as the first entries in the table. Use sorting when virtual outputs have dependencies on other virtual outputs. This setting takes precedence over order set manually in the **VO Order** tab in the compiler.
When disabled, the sequence in which the blocks were drawn is followed.

Optimize Compiled Output — Not applicable. Use the check box outlined earlier in the Optimize the Logic section.

4.4.6.3 Logic monitor

Display

The software displays the color specified when an element is on. There is no color when the element is off.

The software displays another color when the status cannot be determined and is unknown.

Timing

Timing Information can be displayed in the monitoring window. This timing information is only an approximate representation of how Engineer sees transitions. Use the device's Event Record to view accurate timing information.

The timing information can also be streamed to a comma-separated values (CSV) spreadsheet.

The timing information displayed and recorded can be filtered based on six categories. If a category is not selected, any timing information related to that category does not display and is not recorded to the CSV file.

Show Timing Information in Output Window — Enable to display times in the monitoring window.

Because of the update rate of the Logic Monitoring, the timing information cannot be used as an accurate representation of the events that occur within the relay. Use instead the device's event record. Timing information can be delayed by 30 seconds.

Save Timing Information to CSV File — Enable to write timing information in a spreadsheet. The timing information is recorded in a text file that uses commas to separate each of the fields. This file uses the extension CSV that is supported by any spreadsheet application.

Every change written to the CSV file requires a timestamp.

The format for the timing information in the output window is as follows:

yyyy/mm/dd hh:dd:ss
  devicename offline
yyyy/mm/dd hh:dd:ss
  devicename ONLINE
yyyy/mm/dd hh:dd:ss
  VO1: Virt Out 1- 0
  VI4: Virt In 4- 1
  DI3: Direct In 3- 0
  RI2: Remote In 2- 1
  H5a: Contact In 1- 1
  H1: Contact Output 1- 0

Data is only appended to the CSV file. The format for the data is as follows:

yyyy/mm/dd hh:dd:ss, devicename, offline
yyyy/mm/dd hh:dd:ss, devicename, ONLINE
yyyy/mm/dd hh:dd:ss, VO1: Virt Out 1, 0
yyyy/mm/dd hh:dd:ss, VI4: Virt In 4, 1
yyyy/mm/dd hh:dd:ss, DI3: Direct In 3, 0
yyyy/mm/dd hh:dd:ss, RI2: Remote In 2, 1
yyyy/mm/dd hh:dd:ss, H5a: Contact In 1, 1
yyyy/mm/dd hh:dd:ss, H1: Contact Output 1, 0

Options display for filtering, such as recording timing for Virtual Inputs and Outputs, but not Communications Status.

4.4.6.4 COMTRADE waveforms

Waveform files are viewable in the EnerVista software. The preferences are unrelated to Engineer and are outlined in the UR Family Communications Guide.

4.4.7 Toolbars

These are toggled in the **View > Toolbar** menu.

The UR symbols are displayed for the toolbox icons. They change when the default setting is changed to IEC or ISO symbols. The symbols displayed in the toolbox also vary by firmware version, reflecting what is supported for each release.

4.4.7.1 FlexLogic Editor toolbar

	New Device	Create a new settings file
	Open File	Open an existing settings file in the URS, CID, or IID format
	Save FlexLogic	Save the Logic Designer diagram

	PDF Report	Create a PDF document from Logic Designer diagram(s). Settings can be changed under **File > Preferences > Workbook Setup**.
	Toggle Compile Window	Display or hide the compile window area
	Sort Order	Select to change the sort order of the Virtual Output list to the right of the icon. Virtual Outputs can be sorted numerically in ascending and descending order based on numbers and names.
Select VO to View (1-96)	Select VO to View (x - x)	Select a Virtual Output to locate and select it in the workbook. Each Virtual Output listed also contains the name of the sheet where the Virtual Output is located.
	Edit Mode Logic Designer	Switch to Logic Designer mode
	Monitor Mode Logic Monitor	Switch to Logic Monitor mode
	Turn On ALL Communications	Turn on all communications to all Logic Designer diagrams that are in the monitoring mode. Default upon each launch of Engineer.
	Turn Off All Communications	Turn off all communications to all Logic Designer diagrams that are in the monitoring mode. This is a legacy function for serial communication to turn off communication to devices. Turning off communication applies to the current session only. When you re-launch the EnerVista software, communication is on by default.

4

4.4.7.2 Token Toolbox

Drawing Tools

Line	Draw a line. Click and drag to draw.
Polyline	Draw multiple joined lines. Click and drag for each line. Double-click to finish.
Polygon	Draw multi-sided object. Click for each line. Double-click to finish.
Rectangle	Draw four-sided object. Click and drag to draw.
Polycurve	Draw multiple curves. Click for each line. Double-click to finish.
Closed Curve	Draw multiple, closed curves. Click for each line. Double-click to finish.
Ellipse	Draw oval or circle. Click and drag to draw.

Text	Add text box with rectangle around it. Click to add. Double-click it to change text.
Image	Add figure. Select file in the window that opens, then click on diagram canvas to add figure.
Note	Add note icon and text. Click to add. Double-click to edit the title and text.

I/O Tokens

These are parts used in FlexLogic equations. They are the inputs and outputs of the Virtual Output equations. The display can vary from that shown here.

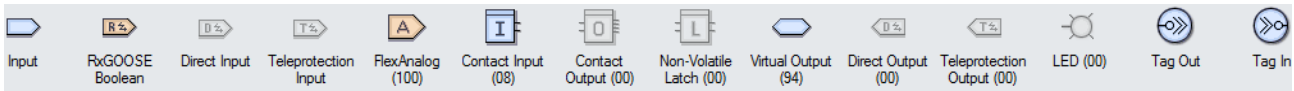

Input	Input symbol that can be configured to any FlexLogic operand value
RxGOOSE Boolean	Remote inputs from other devices
Direct Input	Input from another UR device. Teleprotection inputs/outputs and direct inputs/outputs are mutually exclusive and cannot be used simultaneously.
Teleprotection Input	Teleprotection inputs/outputs and direct inputs/outputs are mutually exclusive and cannot be used simultaneously.
FlexAnalog (100)	FlexAnalog symbol that can be used as the input to a FlexElement or use the FlexAnalog symbol to monitor an actual value when in logic Monitoring mode
Contact Input (24)	Contact Input Gate is similar to the Input symbol but is restricted to the operands associated with a Contact Input
Contact Output (00)	Contact Output Gate is similar to the Input symbol but is restricted to the operands associated with a Contact Output. The Operate and Seal-In settings can be configured graphically.
Non-Volatile Latch (00)	The Non-Volatile Latch is similar to the Input symbol but is restricted to the operands associated with a Non-Volatile Latch. The Set and Reset settings can be configured graphically.

Virtual Output (96)	The final output of an equation is a numbered register called a virtual output. Virtual outputs can be used as an input operand in any equation, including the equation that generates the output, as a seal-in or other type of feedback.
Remote Output (00)	Place and configure a Remote Output. The UR's order code and firmware version then determine the availability of the Remote Output.
Direct Output (00)	Place and configure a Direct Output. The UR's order code and firmware version then determine the availability of the Direct Output to another UR device.
Teleprotection Output (00)	Place and configure a Teleprotection Output. The UR's order code and firmware version then determine the availability of the Teleprotection Output.
LED (00)	Place a User Programmable LED in the Logic Designer diagram. Not applicable when using a graphical front panel.
Tag Out	A Tag Out can be used in 1 of 2 ways. The first use of the Tag Out is to break up logic that needs to span several sheets. The second use of the Tag Out is to associate a frequently used block of code with the Tag Out and then repeatedly use the same block of code using a Tag In. When a Tag Out is referenced more than once, the Tag Out is replaced with a Virtual Output during the compile phase.
Tag In	Tag-In can is used to reference an existing Tag-Out. It joins another diagram to a previous diagram.

4

Boolean Tokens

These symbols are used to create FlexLogic Equations. Use them as intermediate logic for the Virtual Output equations. The display can vary from that shown here.

OR Gate	Place an OR gate in the Logic Designer diagram. Only one action needs to occur. Any function input on the left side satisfies the condition. The number of inputs is configurable from two to 16.
AND Gate	Place an AND gate in the Logic Designer diagram. Multiple actions need to occur. All functions input on the left side are required to satisfy the condition. The number of inputs is configurable from two to 16.
NOR Gate	Place a NOR gate in the Logic Designer diagram. Gives the value of one when all input operands have a value of zero and otherwise gives a value of zero. It gives an output signal when there are no input signals. An inverter that reverses the logic state. The number of inputs is configurable from two to 16.
NAND Gate	Place a NAND gate in the Logic Designer diagram. Gives the value of zero when all input operands have a value of one and otherwise gives a value of one. It gives an output signal until all signals are present on its inputs. An inverter that reverses the logic state. The number of inputs is configurable from two to 16.

XOR Gate	Place a XOR gate in the Logic Designer diagram, which is two exclusive OR gates. Only one action needs to occur. If there are two inputs or there is no input, there is no output.
NOT Gate	Place a NOT gate in the Logic Designer diagram. Gives the value of one when the input operand has a value of zero and otherwise gives a value of zero. It gives an output signal when there is no input signal. An inverter that reverses the logic state.
Latch	Place a latch in the Logic Designer diagram. A latch has two inputs and one output. One input is the Set input, and other input is the Reset input.
Positive One Shot	Place a positive one shot symbol that responds to a positive going edge in the Logic Designer diagram. A "one shot" is a single input gate that generates a pulse ins response to an edge on the input.
Negative One Shot	Place a negative one shot symbol that responds to a negative going edge in the Logic Designer diagram
Dual One Shot	Place a positive one shot and a negative one shot symbol in the Logic Designer diagram
Timer (32)	Place a timer in the Logic Designer diagram

Elements

These blocks configure properties of the element or use element operands as input to FlexLogic equations.

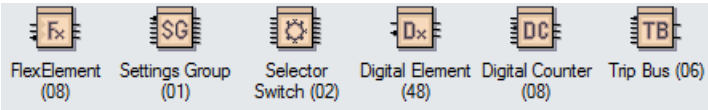

FlexElement (08)	Place and configure a FlexElement. A FlexElement is a universal comparator used to monitor any analog actual value calculated by the relay or a net difference of any two analog actual values of the same type.
Settings Group (01)	Place and configure the Settings Group settings
Selector Switch (02)	Place and configure a Selector Switch element. Firmware version determines feature availability. The Selector Switch element is intended to replace a mechanical selector switch. Typical applications include setting group control or control of multiple logic sub-circuits in user-programmable logic. The element provides for two control inputs.
Digital Element (48)	Place and configure a Digital Element. A Digital Element can monitor any FlexLogic operand and present a target message and/or enable events recording depending on the output operand state.

Digital Counter (08)	Place and configure a Digital Counter element. A Digital Counter counts the number of state transitions from Logic 0 to Logic 1. The counter is used to count operations such as the pickups of an element.

4.4.7.3 Basic Actions toolbar

	Select	Select components. Click one component and hold down the **CTRL** key to select others. Or click and drag an area that contains multiple components to select.
	Edit Vertices	Shows vertices points for the component selected (if the component support vertices manipulation)
	Properties	Shows the properties of the selected component
	Zoom Normal	Zoom in and center the screen to the spot selected
	Zoom to Fit	Zoom in to a magnitude that fits your entire schema layout on your entire screen
	Zoom Custom	Zoom in on the components that you have selected
	Pan	Move the viewable area of your screen around the schema. To activate, select this tool and then place the hand icon over and part of your schema. Click and drag the hand in a direction to move around the schema.
	Align Top, Middle, Bottom	Align the selected components to the top, middle, or bottom of the reference component
	Align Left, Center, Right	Align the selected components to the left, middle, or right of the reference component
	Space Across	Evenly space the selected components across a horizontal axis, starting from the far left component and ending at the far right component
	Space Down	Evenly space the selected components across a vertical axis, starting from the top component and ending at the bottom component
	Same Width	Set the width of the selected components to the same width as the reference component
	Same Height	Set the height of the selected components to the same height as the reference component
	Same Size	Set the width and height of the selected components to the same width and height of the reference component

4.4.7.4 Advanced Actions toolbar

Only basic objects (lines, rectangles, ellipses) can be rotated and flipped.

Only objects from the Drawing Toolbar can be structured (grouped, ungrouped, forward, backward).

	Nudge Up, Down, Left, Right	Moves selected component one pixel upward, downward, left, right
	Rotate	Rotates selected component freely. Once selected, put your mouse cursor over the component and move the component clockwise or counter-clockwise depending on what you need.
	Rotate Left, Right	Rotates selected component 90 degrees counter-clockwise or clockwise

	Flip Vertical	Flips the selected component on the vertical axis
	Flip Horizontal	Flips the selected component on the horizontal axis
	Group, Ungroup	Combines all selected components into one combined entity. Ungroups them into separate components.
	Front, Back	Moves current components to the absolute front or back of all viewable layers
	Forward, Backward	Moves current components on layer higher or lower than its original layer hierarchy

NOTE

For the above elements from FlexElement to Trip Bus plus the Progrmmable LEDs, they all can be configured either within the Logic Designer or in each own setting screen, the user should use only the Logic Designer or the setting screen for the configuration but not both methods to avoid the inconsistencies issues.

N60 Network Stability and Synchrophasor Measurement System

Chapter 5: Settings

This chapter outlines front panel and/or software settings. The relay is not taken out of service when saving settings; the relay is taken out of service when a settings file is written to it.

Settings can be viewed remotely in a web browser by entering the IP address of the relay, accessing the **Device Information Menu** option, then the **Front-Panel Display Report** option.

When indicated that a restart is required for a setting change to take effect, use the **Maintenance > Reboot Relay Command** in the software.

Settings file conversion from previous firmware versions is supported. See the Maintenance chapter.

5.1 Settings menu

■■ SETTINGS ■■ PRODUCT SETUP	⇔	■ SECURITY ■	See page 5-7
⇩	⇕	■ DISPLAY ■ PROPERTIES	See page 5-26
	⇕	■ CLEAR RELAY ■ RECORDS	See page 5-41
	⇕	■ COMMUNICATIONS ■	See page 5-41
	⇕	■ MODBUS USER MAP ■	See page 5-122
	⇕	■ REAL TIME ■ CLOCK	See page 5-123
	⇕	■ USER-PROGRAMMABLE ■ FAULT REPORTS	See page 5-132
	⇕	■ OSCILLOGRAPHY ■	See page 5-133
	⇕	■ DATA LOGGER ■	See page 5-136

5

	⇕	■ DEMAND ■	See page 5-137
	⇕	■ USER-PROGRAMMABLE ■ LEDS	See page 5-138
	⇕	■ USER-PROGRAMMABLE ■ SELF TESTS	See page 5-143
	⇕	■ CONTROL ■ PUSHBUTTONS	See page 5-144
	⇕	■ USER-PROGRAMMABLE ■ PUSHBUTTONS	See page 5-145
	⇕	■ FLEX STATE ■ PARAMETERS	See page 5-151
	⇕	■ USER-DEFINABLE ■ DISPLAYS	See page 5-152
	⇕	■ DIRECT I/O ■	See page 5-154
	⇕	■ TELEPROTECTION ■	See page 5-160
⇧	⇧	■ INSTALLATION ■	See page 5-161
■■ REMOTE RESOURCES ■■	⇔	■ ■	Access in EnerVista See page 5-162
■■ SETTINGS ■■ SYSTEM SETUP	⇔	■ AC INPUTS ■	See page 5-163
⇩	⇕	■ POWER SYSTEM ■	See page 5-165
	⇕	■ SIGNAL SOURCES ■	See page 5-166
	⇕	■ BREAKERS ■	See page 5-171
	⇕	■ SWITCHES ■	See page 5-180
	⇕	■ FLEXCURVES ■	See page 5-188
⇧	⇧	■ PHASOR MEASUREMENT ■ UNIT	See page 5-195
■■ PROCESS BUS ■■ MODULE	⇔	■ GENERAL ■	See page 5-217
⇧	⇧	■ SV STREAM CONFIG ■	Access in EnerVista See page 5-226
■■ SETTINGS ■■ FLEXLOGIC	⇔	■ FLEXLOGIC ■ EQUATION EDITOR	See page 5-262
⇩	⇕	■ FLEXLOGIC ■ TIMERS	See page 5-262
	⇕	■ FLEXELEMENTS ■	See page 5-263
	⇕	■ NON-VOLATILE ■ LATCHES	See page 5-267

⇧	⇧	■ FLEXMATH ■	See page 5-268
■■ SETTINGS ■■ GROUPED ELEMENTS	⇔	■ SETTING GROUP 1 ■	See page 5-271
⇩	⇧	■ SETTING GROUP 2 ■	
	⇧	■ SETTING GROUP 3 ■	
	⇧	■ SETTING GROUP 4 ■	
	⇧	■ SETTING GROUP 5 ■	
⇧	⇧	■ SETTING GROUP 6 ■	
■■ SETTINGS ■■ CONTROL ELEMENTS	⇔	■ TRIP BUS ■	See page 5-316
⇩	⇧	■ SETTING GROUPS ■	See page 5-318
	⇧	■ SELECTOR SWITCH ■	See page 5-320
	⇧	■ UNDERFREQUENCY ■	See page 5-327
	⇧	■ OVERFREQUENCY ■	See page 5-328
	⇧	■ SYNCHROCHECK ■	See page 5-329
	⇧	■ DIGITAL ELEMENTS ■	See page 5-335
	⇧	■ DIGITAL COUNTERS ■	See page 5-338
	⇧	■ MONITORING ■ ELEMENTS	See page 5-340
	⇧	■ FREQUENCY RATE ■ OF CHANGE	See page 5-350
	⇧	■ DIGITIZERS ■	See page 5-352
	⇧	■ 8-BIT COMPARATORS ■	See page 5-355
	⇧	■ 8-BIT SWITCHES ■	See page 5-361
⇧	⇧	■ MULTI-RANGE SIGNAL ■ OSCILL DETECTOR	See page 5-362
■■ SETTINGS ■■ INPUTS / OUTPUTS	⇔	■ CONTACT INPUTS ■	See page 5-367
⇩	⇧	■ VIRTUAL INPUTS ■	See page 5-369
	⇧	■ CONTACT OUTPUTS ■	See page 5-370

5

	⇕	■ VIRTUAL OUTPUTS ■	See page 5-373
	⇕	■ RESETTING ■	See page 5-374
	⇕	■ DIRECT INPUTS ■	See page 5-375
	⇕	■ DIRECT OUTPUTS ■	See page 5-375
	⇕	■ DIRECT ANALOGS ■	See page 5-378
	⇕	■ DIRECT INTEGERS ■	See page 5-381
⇧	⇧	■ TELEPROTECTION ■	See page 5-382
■■ SETTINGS ■■ TRANSDUCER I/O	⇔	■ DCMA INPUTS ■	See page 5-384
⇩	⇕	■ RTD INPUTS ■	See page 5-385
⇧	⇧	■ DCMA OUTPUTS ■	See page 5-386
■■ SETTINGS ■■ TESTING	⇔	■ IED MODE CONFIG ■	See page 5-390
⇩	⇕	■ FORCE CONTACT ■ INPUTS	See page 5-393
	⇕	■ FORCE CONTACT ■ OUTPUTS	See page 5-394
⇧	⇧	■ PMU ■ TEST VALUES	See page 5-394
■■ SETTINGS ■■ SIMULATION	⇔	■ SUBSCRIBE TO ■ SIMULATED VALUES	See page 5-396
	⇧	■ PUBLISH ■ SIMULATED VALUES	See page 5-398

5

5.2 Overview

5.2.1 Introduction to elements

For URs, the term *element* is used to describe a feature that is based around a comparator. The comparator is provided with an input (or set of inputs) that is tested against a programmed setting (or group of settings) to determine if the input is within the defined range that sets the output to logic 1, also referred to as *setting the flag*. A single comparator can make multiple tests and provide multiple outputs. For example, the time overcurrent comparator sets a pickup flag when the current input is above the setting and sets an operate flag when the input current has been at a level above the pickup setting for the time specified by the time-current curve settings. All comparators use analog actual values as the input.

NOTE

An exception to this rule is digital elements, which use logic states as inputs.

Elements are arranged into two classes, *grouped* and *control*. Each element classed as a grouped element is provided with six alternate sets of settings, in setting groups numbered 1 through 6. The performance of a grouped element is defined by the setting group that is active at a given time. The performance of a control element is independent of the selected active setting group.

The main characteristics of an element are shown on a logic diagram. This includes the inputs, settings, fixed logic, and the output operands generated. The previous chapter explains how to read a logic diagram, and the abbreviations used in a diagram are defined in the Abbreviations chapter.

Some settings are specified in per-unit (pu) calculated quantities:

pu quantity = (actual quantity) / (base quantity)

Where the current source is from a single current transformer (CT), the *base quantity* is the nominal secondary or primary current of the CT. Use the secondary current base to convert per-unit settings to/from a secondary current value, and use the primary current base to convert to/from a primary current value.

Where the current source is the sum of two or more CTs with different nominal primary current, the primary base quantity is the largest nominal primary current. For example, if CT1 = 300 / 5 A and CT2 = 100 / 1 A, then in order to sum these, CT2 is scaled to the CT1 ratio. In this case, the base quantity is 300 A primary, 5 A secondary for CT1, and 300/(100/1) = 3 A secondary for CT2.

For voltage elements, the primary base quantity is the nominal phase-to-phase primary voltage of the protected system provided that the VT ratio setting is set to the nominal ratio of the VTs and the secondary voltage setting is set to the phase-to-phase voltage seen by the relay when the voltage of the protected system in nominal. The UR uses the convention that nominal voltages in a three-phase system are phase-to-phase voltages.

For example, on a system with a 13.8 kV nominal primary voltage, the base quantity is 13800 V. With 14400:120 V delta-connected VTs, the secondary base quantity and secondary voltage setting is:

$$\frac{13800}{14400} \times 120 = 115 \text{ V} \qquad \textbf{Eq. 5-1}$$

For wye-connected VTs, the primary and secondary base quantities are as before, but the secondary voltage setting (here a phase-to-ground value) is:

$$\frac{13800}{14400} \times \frac{120}{\sqrt{3}} = 66.4 \text{ V} \qquad \textbf{Eq. 5-2}$$

Some settings are common to many elements, outlined as follows:

- **FUNCTION setting** — This setting allows the element to operate when selected as “Enabled.” The factory default is “Disabled.” Once “Enabled,” any element associated with the function becomes active and all options become available.
- **NAME setting** — This setting is used to uniquely identify the element.
- SOURCE setting — This setting is used to select the AC source to be monitored. See the Introduction to AC Sources section later.
- PICKUP setting — For simple elements, this setting is used to program the level of the measured parameter above or below which the pickup state is established. In more complex elements, a set of settings can be provided to define the range of the measured parameters that cause the element to pick up.
- **PICKUP DELAY setting** — This setting sets a time-delay-on-pickup, or on-delay, for the duration between the pickup and operate output states.
- **RESET DELAY setting** — This setting is used to set a time-delay-on-dropout, or off-delay, for the duration between the operate output state and the return to logic 0 after the input transits outside the defined pickup range.
- **BLOCK setting** — This setting selects a FlexLogic operand, which when active blocks the element from running. When the FlexLogic operand is selected as 'ON', the element is permanently blocked; when the FlexLogic operand is selected as 'OFF', the block is disabled and the element is always running.
- **TARGET setting** — This setting is used to define the operation of an element target message. When set to "Disabled," no target message or illumination of a front panel LED indicator is issued upon operation of the element. When set to “Self-Reset,” the target message and LED indication follow the operate state of the element and self-resets once the

operate element condition clears. When set to "Latched," the target message and LED indication remains visible after the element output returns to logic 0 until a RESET command is received by the relay.

- **EVENTS setting** — This setting is used to control whether the pickup, dropout, or operate states are recorded by the event recorder. When set to "Disabled," element pickup, dropout, or operate are not recorded as events. When set to "Enabled," events are created for

  <Element> PKP (pickup)
  <Element> DPO (dropout)
  <Element> OP (operate)

  The DPO event is created when the measure and decide comparator output transits from the pickup state (logic 1) to the dropout state (logic 0). This can happen when the element is in the operate state if the reset delay time is not zero.

  Not every operand of a given element in a UR relay generates events, only the major output operands. Elements, asserting output per phase, log operating phase output only, without asserting the common three-phase operand event.

5.2.2 Introduction to AC sources

5.2.2.1 Background

A mechanism called a Source creates a group of CT and VT input channels to be used by one or more protection and control elements. Sources, in the context of UR series relays, refer to the logical grouping of current and voltage signals such that one source contains all the signals required to measure the load or fault in a particular power system. A given source can contain some, or all, of the following signals:

- Three-phase currents
- Single-phase ground current
- Three-phase voltages
- An auxiliary voltage from a single VT for checking for synchronism.

For example, a line protection system having distance protection, phase and ground overcurrent protection supervised by a directional element, and breaker failure protection, can use a single source (SRC 1) shown in the table below. For some functions, two sources are needed. For example, for the synchrocheck function, voltage across the breaker needs to be measured, therefore both SRC1 with a phase voltage and source SRC 2 with an auxiliary voltage are needed.

Two AC sources are provided for each DSP module in UR relays. In relays with two DSP modules, four AC sources are provided. In relays with three DSP modules, six AC sources are provided.

Parameter	Source 1	Source 2
Name	SRC 1	SRC 2
Phase CT	F1	None
Ground CT	F1	None
Phase VT	F5	None
Aux VT	None	F5

Another important feature of the UR source is the ability to sum currents internally. In conventional analog or electronic relays, the sum of the currents is obtained from an external electrical connection of all CTs, through which any portion of the current for the element being protected can flow. In this case, auxiliary interposing CTs are needed to perform ratio matching, if the ratios of the primary CTs to be summed are not identical. In the UR series of relays, all the current signals are input to the UR device individually, where grouping, ratio correction, and summation are calculated internally with the help of configuration settings.

A major advantage of using internal summation is that the individual currents are still available to the protection device along with a summed current. For example, in a breaker-and-a-half configuration, CT current summed from both breakers is used for the line distance and overcurrent protection, while still being available as individual currents, for breaker failure protection for both breakers.

The internal grouping of current and voltage signals forms an AC source. This source can be given a specific name through the settings and becomes available to protection and metering elements. Individual names can be given to each source to help identify them for later use.

Once the sources have been configured, you have them available as selections for the choice of input signal for the protection elements and as metered quantities.

5.2.2.2 CT/VT module configuration

Current transformer (CT) and voltage transformer (VT) input channels are contained in CT/VT modules, which are also known as DSP modules. The type of input channel can be phase/neutral/other voltage, phase/ground current, or sensitive ground current. The CT/VT modules calculate total waveform RMS levels, fundamental frequency phasors, symmetrical components, and harmonics for voltage or current, as allowed by the hardware in each channel. These modules can calculate other parameters as directed by the CPU module.

A DSP module contains up to eight input channels, numbered 1 through 8. The channel numbering corresponds to the module terminal numbering 1 through 8 and is arranged as follows. Channels 1, 2, 3, and 4 are always provided as a group, hereafter called a "bank," and all four are either current or voltage. The same principle applies to channels 5, 6, 7, and 8. Channels 1, 2, 3 and 5, 6, 7 are arranged as phase A, B, and C respectively. Channels 4 and 8 are either another current or voltage. The following table shows an example configuration for the 8L type module in the F-slot.

Channel /Terminal	Bank	Quantity
Channel 1 (F1)	1	VA
Channel 2 (F2)	1	VB
Channel 3 (F3)	1	VC
Channel 4 (F4)	1	Vx
Channel 5 (F5)	2	IA
Channel 6 (F6)	2	IB
Channel 7 (F7)	2	IC
Channel 8 (F8)	2	IG

Note. The above table is an example configuration only. There are several different possible combinations of CT/VT sets.

The UR platform allows for a maximum of six sets of three-phase quantities, totaling 24 channels in all. The maximum configuration would therefore occupy 3 slots, each slot containing two banks of four AC quantities (CTs or VTs).

The arrangement of the DSP modules and banks are shown as follows:

DSP module 1 (e.g. slot F)	DSP module 2 (e.g. slot M)	DSP module 3 (e.g. slot S)
Bank 1	Bank 3	Bank 5
Bank 2	Bank 4	Bank 6

5.3 Product setup

5.3.1 Security

Cyber security

The UR family of products are digital devices designed to be installed and operated in utility substations & industrial plant environments and connected to secure private networks. UR Family IED should not be connected to the public internet.

GE strongly recommends that users protect their digital devices using a defense-in-depth strategy which will protect their products, their network, their systems and interfaces against cyber security threats. This includes, but is not limited to, placing digital devices inside the control system network security perimeter, deploying and maintaining access controls, monitoring and Intrusion Detection, security awareness training, security policies, network

segmentation and firewalls installation, strong and active password management, data encryption, antivirus and other mitigating applicable technologies.
UR Family IEDs are available with an optional software option, which provides additional cyber security mechanisms to help users protect against cyber security intrusion. GE strongly recommends use this "CyberSentry" option.
For additional details and recommendations on how to protect the UR Family IED, please see Hardening Setup section below. GE Grid Solution may also provide additional instructions and recommendations to users from time to time relating to UR Family IED and cyber security threats or vulnerabilities.
It is the users' sole responsibility to make sure that UR Family IEDs are installed and operated considering its cyber security capabilities, security context, and the instructions and recommendations provided to the user relating to UR Family IED. Users assume all risks and liability associated with damages or losses incurred in connection with any and all cyber security incidences.

5.3.1.1 Security overview

The following security features are available:

- Password security — Basic security present by default
- EnerVista security — Role-based access to various EnerVista software screens and configuration elements. The feature is present by default in the EnerVista software.
- CyberSentry security — Advanced security available using a software option. When purchased, the option is enabled automatically, and the default Password security and EnerVista security are disabled.

To maximize security, see the UR Family Secure Deployment Guide.

Lost password

If all passwords are lost, reset the unit to default values. Follow the instructions outlined later for **COMMANDS ⇨⇩ RELAY MAINTENANCE ⇨ SERVICE COMMAND**. Note that the relay is reset to default values, not just the passwords.

Then for CyberSentry, change the default password of ChangeMe1# as outlined in the Set Up CyberSentry and Change Default Password section at the end of the Installation chapter.

Password requirements

A user account requires an alpha-numeric password that meets the following requirements:

- Password is case-sensitive
- Password cannot contain the user account name or parts of the user account that exceed two consecutive characters
- Password must be 8 to 20 characters in length
- Password must contain characters from all of the following categories:
  - English uppercase characters (A through Z)
  - English lowercase characters (a through z)
  - Base 10 digits (0 through 9)
  - Non-alphabetic characters (for example, ~, !, @, #, $,%, &)

5.3.1.2 Password security

SETTINGS ⇨ PRODUCT SETUP ⇨ SECURITY

■ **SECURITY** ■	⇔	**ACCESS LEVEL:** **Restricted**	Range: Restricted, Command, Setting, Factory Service (for factory use only)
	⇕	■ **CHANGE LOCAL** ■ **PASSWORDS**	See page 5-10
	⇕	■ **CHANGE REMOTE** ■ **PASSWORDS**	See page 5-10

⇕	■ ACCESS ■ SUPERVISION	See page 5-11
⇕	■ DUAL PERMISSION ■ SECURITY ACCESS	See page 5-12
⇧	PASSWORD ACCESS EVENTS: Disabled	Range: Disabled, Enabled

The N60 supports password entry from a local or remote connection.

Local access is defined as access to settings or commands via the front panel. This includes both keypad entry and the RS232 port. Remote access is defined as access to settings or commands via any rear communications port. This includes both Ethernet and RS485 connections. Any change to the local or remote password enables this functionality.

NOTE

For a relay without a CyberSentry software option, any user can activate the **RESET** button or Reset/Acknowledge an alarm in the Graphical Front Panel Annunciator without password entry.

ACCESS LEVEL — This setting is viewable on the front panel. The Setting and Command passwords can be changed in the EnerVista interface.

The "Restricted" option means that settings and commands can be accessed, but there is no access to factory configuration. Access automatically reverts to the Restricted level according to the **ACCESS LEVEL TIMEOUTS** values. The access level is set to Restricted when control power is cycled.

The "Factory Service" level is for factory functions.

There are two user security access levels, setting and command, for which you can set a password for each. Use of a password for each level controls whether users can enter commands or change settings. Another option is to specify setting and/or command access for individual user accounts.

- **Setting** — Allows the user to make any changes to any of the setting values:
  - Change any setting
  - Test mode operation
- **Command** — Restricts the user from making any settings changes, but allows the user to perform the following operations:
  - Operate the breakers via front panel keypad
  - Change the state of virtual inputs
  - Clear the event records
  - Clear the oscillography records
  - Change the date and time
  - Clear energy records
  - Clear the data logger
  - Clear the user-programmable pushbutton states

When entering a settings or command password via EnerVista or any serial interface, the user must enter the corresponding connection password. If the connection is to the back of the N60, use the remote password. If the connection is to the RS232 port of the front panel, use the local password.

The local setting and command sessions are initiated by the user through the front panel display and are disabled either by the user or by timeout (via the setting and command level access timeout settings). The remote setting and command sessions are initiated by the user through the EnerVista software and are disabled either by the user or by timeout.

The state of the session (local or remote, setting or command) determines the state of the following FlexLogic operands:

- ACCESS LOC SETG OFF — Asserted when local setting access is disabled
- ACCESS LOC SETG ON — Asserted when local setting access is enabled
- ACCESS LOC CMND OFF — Asserted when local command access is disabled
- ACCESS LOC CMND ON — Asserted when local command access is enabled

- ACCESS REM SETG OFF — Asserted when remote setting access is disabled
- ACCESS REM SETG ON — Asserted when remote setting access is enabled
- ACCESS REM CMND OFF — Asserted when remote command access is disabled
- ACCESS REM CMND ON — Asserted when remote command access is enabled

NOTE

A command or setting write operation is required to update the state of the remote and local security operands listed.

When a setting password or command password is set or updated, user access with a graphical front panel is removed. Simply log in again on the graphical front panel.

When the setting password is set or updated, the graphical front panel Access Level displays as Command. This is because the graphical front panel is a Modbus client and it does not have automatic access to the password change.

PASSWORD ACCESS EVENTS — This setting allows recording of password access events in the event recorder.

Change local passwords

SETTINGS ⇨ PRODUCT SETUP ⇨ SECURITY ⇨⇩ CHANGE LOCAL PASSWORDS

■ CHANGE LOCAL ■ PASSWORDS	⇔	CHANGE SETTING PASSWORD: No	Range: No, Yes
	⇧	CHANGE COMMAND PASSWORD: No	Range: No, Yes

5

As outlined in the previous section, there are two user security access levels, setting and command. Use of a password for each level controls whether users can enter commands or change settings.

Proper password codes are required to enable each access level. When a **CHANGE COMMAND PASSWORD** or **CHANGE SETTING PASSWORD** setting is programmed to "Yes" via the front panel interface, the following message sequence is invoked:

1. ENTER NEW PASSWORD: _____.
2. VERIFY NEW PASSWORD: _____.
3. NEW PASSWORD HAS BEEN STORED.

To gain write access to a "Restricted" setting, program the **ACCESS LEVEL** setting in the main security menu to "Setting" and then change the setting, or attempt to change the setting and follow the prompt to enter the programmed password. If the password is correctly entered, access is allowed. Access automatically reverts to the "Restricted" level according to the access level timeout setting values and when power is cycled.

NOTE

If the setting and command passwords are identical, then this one password allows access to both commands and settings.

If a remote connection is established, local passcodes are not visible.

Change remote passwords

Proper passwords are required to enable each command or setting level access, which are explained in the previous section.

SETTINGS ⇨ PRODUCT SETUP ⇨ SECURITY ⇨⇩ CHANGE REMOTE PASSWORDS

■ CHANGE REMOTE ■ PASSWORDS	⇔	CHANGE SETTING PASSWORD: No	Range: No, Yes
	⇧	CHANGE COMMAND PASSWORD: No	Range: No, Yes

To set the command or setting password in EnerVista:

1. In the EnerVista software or from the front panel, navigate to **Settings > Product Setup > Security** menu item to open

the remote password settings window.

2. Click the command or setting password **Change** button.
3. Enter the new password in the **New Password** field. Requirements are outlined in the Password Requirements section earlier in this chapter. When an original password has already been used, enter it in the **Enter Password** field and click the **Send Password to Device** button.
4. Re-enter the password in the **Confirm Password** field.
5. Click the **OK** button. The password is checked to ensure that it meets requirements.

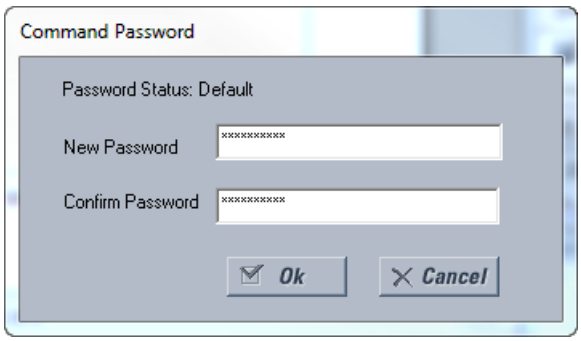

NOTE

If you establish a local (serial) connection to the relay, you cannot view remote passcodes.

Access supervision

SETTINGS ⇨ PRODUCT SETUP ⇨ SECURITY ⇨⇩ ACCESS SUPERVISION

■ ACCESS ■ SUPERVISION	⇔	■ ACCESS LEVEL ■ TIMEOUTS	See below
	⇩	INVALID ATTEMPTS BEFORE LOCKOUT: 3	Range: 2 to 5 in steps of 1
	⇩	PASSWORD LOCKOUT DURATION: 5 min	Range: 5 to 60 minutes in steps of 1
	⇩	FACTORY SERVICE MODE: Disabled	Range: Enabled, Disabled
	⇧	LOCK FIRMWARE: Enabled	Range: Enabled, Disabled

This menu displays when the **ACCESS LEVEL** setting is other than Restricted or Command.

The following access supervision settings are available.

INVALID ATTEMPTS BEFORE LOCKOUT — This setting specifies the number of times that an incorrect password can be entered within three minutes before lockout occurs. When lockout occurs, the LOCAL ACCESS DENIED or REMOTE ACCESS DENIED FlexLogic operands are set to "On." These operands return to the "Off" state upon expiration of the lockout.

PASSWORD LOCKOUT DURATION — This setting specifies the time that the N60 locks out password access after the number of invalid password entries specified by the **INVALID ATTEMPTS BEFORE LOCKOUT** setting.

The N60 provides a means to raise an alarm upon failed password entry. If password verification fails while accessing a password-protected level of the relay (either settings or commands), the UNAUTHORIZED ACCESS FlexLogic operand is asserted. The operand can be programmed to raise an alarm via contact outputs or communications. This feature can be used to protect against both unauthorized and accidental access attempts.

The UNAUTHORIZED ACCESS operand is reset with the **COMMANDS ⇨⇩ CLEAR RECORDS ⇨⇩ RESET UNAUTHORIZED ALARMS** command. Therefore, to apply this feature with security, password-protect the Command level. The operand does not generate events or targets.

If events or targets are required, the UNAUTHORIZED ACCESS operand can be assigned to a digital element programmed with event logs or targets enabled.

FACTORY SERVICE MODE — A factory service user is supported to perform additional operations intended only for them. This setting allows access by GE support staff to be turned on and off. A factory service user can log in only when this setting is configured as Enabled. It is disabled by default. When Enabled, the relay logs events and activates the TROUBLE LED.

GE recommends that Factory Service Mode be disabled when factory operations are not intended to be performed. The TROUBLE LED de-activates when a user disables Factory Service Mode.

Login is required for this user, and the password is unique for each relay.

A factory service user is logged out with any of the following circumstances:

- UR restarts
- **FACTORY SERVICE MODE** setting is disabled by Administrator or factory service user
- **ACCESS LEVEL** setting is changed from "Factory Service" via front panel or serial connection

LOCK FIRMWARE — This setting determines whether the device accepts or blocks a firmware upgrade. When Disabled, firmware can be updated. When Enabled, the firmware cannot be updated. When Enabled/locked and a firmware upgrade is attempted using the software, the UNAUTH FW ATTEMPT FlexLogic operand does not assert. When locked and a firmware upgrade is attempted without using the software, the operand asserts. A user with an Access Level of "Settings" can modify this setting.

The following table outlines access level timeout settings.

SETTINGS ⇨ PRODUCT SETUP ⇨ SECURITY ⇨⇩ ACCESS SUPERVISION ⇨⇩ ACCESS LEVEL TIMEOUTS

■ ACCESS LEVEL ■ TIMEOUTS	⇔	COMMAND LEVEL ACCESS TIMEOUT: 5 min	Range: 5 to 480 minutes in steps of 1
	⇧	SETTING LEVEL ACCESS TIMEOUT: 30 min	Range: 5 to 480 minutes in steps of 1

These settings allow the user to specify the length of inactivity required before returning to the Restricted access level. Note that the access level is set to Restricted when control power is cycled.

COMMAND LEVEL ACCESS TIMEOUT — This setting specifies the length of inactivity (no local or remote access) required to return to Restricted access from the Command password level.

SETTING LEVEL ACCESS TIMEOUT — This setting specifies the length of inactivity (no local or remote access) required to return to Restricted access from the Settings password level.

Dual-permission security access

SETTINGS ⇨ PRODUCT SETUP ⇨ SECURITY ⇨⇩ DUAL PERMISSION SECURITY ACCESS

■ DUAL PERMISSION ■ SECURITY ACCESS	⇔	LOCAL SETTING AUTH: On	Range: selected FlexLogic operands (see below)
	⇩	REMOTE SETTING AUTH: On	Range: FlexLogic operand
	⇧	ACCESS AUTH TIMEOUT: 30 min	Range: 5 to 480 minutes in steps of 1

This menu displays when the **ACCESS LEVEL** setting is other than Restricted or Command.

This feature provides a mechanism to prevent unauthorized or unintended upload of settings to a relay through the local or remote interface.

The following settings are available through the local (front panel) interface only.

- **LOCAL SETTING AUTH** — This setting is used for local (front panel or RS232 interface) setting access supervision. Valid values for the FlexLogic operands are either “On” (default) or any physical “Contact Input ~~ On” value.

If this setting is “On,” then local setting access functions as normal; that is, a local setting password is required. If this setting is any contact input on FlexLogic operand, then the operand must be asserted (on) prior to providing the local setting password to gain setting access.

If setting access is *not* authorized for local operation (front panel or RS232 interface) and the user attempts to obtain setting access, then the UNAUTHORIZED ACCESS message displays on the front panel.

If this setting is "Off," firmware upgrades are blocked. If this setting is "On," firmware upgrades are allowed.

- **REMOTE SETTING AUTH** — This setting is used for remote (Ethernet or RS485 interface) setting access supervision.

  If this setting is “On” (the default setting), then remote setting access functions as normal; that is, a remote password is required. If this setting is “Off,” then remote setting access is blocked even if the correct remote setting password is provided. If this setting is any other FlexLogic operand, then the operand must be asserted (set as on) prior to providing the remote setting password to gain setting access.

  If this setting is "Off," firmware upgrades are blocked. If this setting is "On," firmware upgrades are allowed.

- **ACCESS AUTH TIMEOUT** — This setting represents the timeout delay for local setting access. This setting is applicable when the **LOCAL SETTING AUTH** setting is programmed to any operand except “On.” The state of the FlexLogic operand is monitored continuously for an off-to-on transition. When this occurs, local access is permitted and the timer programmed with the **ACCESS AUTH TIMEOUT** setting value is started. When this timer expires, local setting access is immediately denied. If access is permitted and an off-to-on transition of the FlexLogic operand is detected, the timeout is restarted. The status of this timer updates every five seconds.

The following settings are available through the remote (EnerVista UR Setup) interface only. Select the **Settings > Product Setup > Security** menu item to display the security settings window.

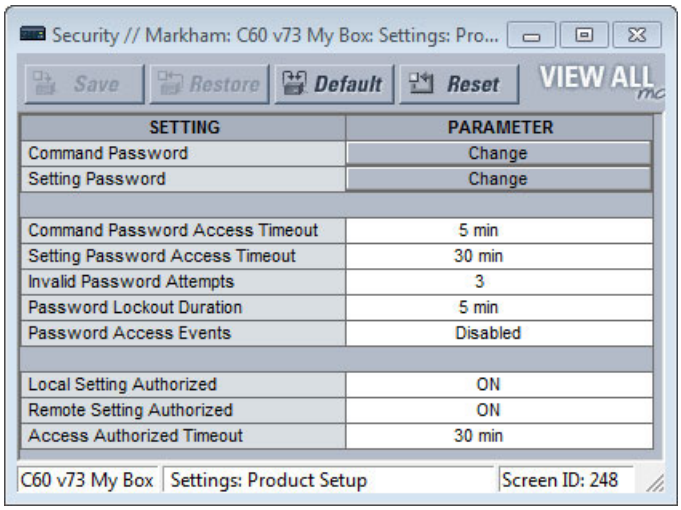

SETTING	PARAMETER
Command Password	Change
Setting Password	Change
Command Password Access Timeout	5 min
Setting Password Access Timeout	30 min
Invalid Password Attempts	3
Password Lockout Duration	5 min
Password Access Events	Disabled
Local Setting Authorized	ON
Remote Setting Authorized	ON
Access Authorized Timeout	30 min

The **Remote Settings Authorized** setting is used for remote (Ethernet or RS485 interface) setting access supervision. If this setting is “On” (the default setting), then remote setting access functions as normal; that is, a remote password is required. If this setting is “Off,” then remote setting access is blocked even if the correct remote setting password is provided. If this setting is any other FlexLogic operand, then the operand must be asserted (on) prior to providing the remote setting password to gain setting access.

The **Access Authorized Timeout** setting represents the timeout delay remote setting access. It applies when the **Remote Settings Authorized** setting is programmed to any operand except “On” or “Off.” The state of the FlexLogic operand is continuously monitored for an off-to-on transition. When this occurs, remote setting access is permitted, and the timer programmed with the **Access Authorized Timeout** setting value is started. When this timer expires, remote setting access is denied immediately. If access is permitted and an off-to-on transition of the FlexLogic operand is detected, the timeout is restarted. The status of this timer updates every five seconds.

5.3.1.3 EnerVista security

NOTE

From EnerVista UR Setup version 8.50, **Change Password** and **User Security** menus are removed under the **Admin** menu, so the users can not setup different access rights like Delete Entry, Settings, Commands etc in the new software, the **Login User** menu is changed to **Factory Use Only: Login** only for the factory service to use.

Figure 5-1: Admin menu of EnerVista UR Setup

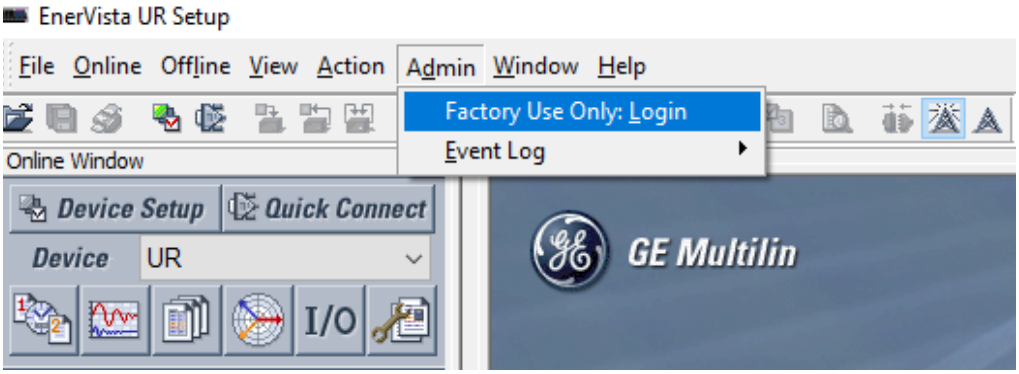

5

5.3.1.4 CyberSentry security

SOFTWARE OPTION

This feature requires a CyberSentry software option, specified at the time of ordering.

The EnerVista software provides the means to configure and authenticate the N60 access using either a server or the device. Access to functions depends on user role.

The login screen of EnerVista has two options for access to the N60, these being Server and Device authentication.

Figure 5-2: Login screen for CyberSentry

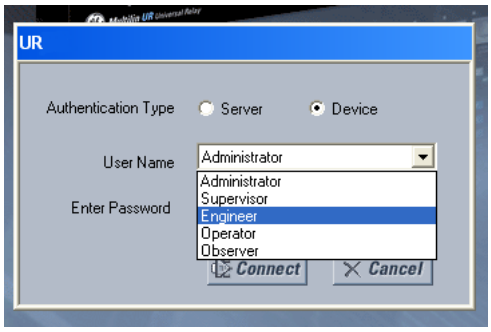

When the "Server" **Authentication Type** is selected, the N60 uses the RADIUS server and not its local authentication database to authenticate the user.

When the "Device" button is selected, the N60 uses its local authentication database and not the RADIUS server to authenticate the user. In this case, it uses built-in roles (Administrator, Engineer, Supervisor, Operator, Observer, or Administrator and Supervisor when Device Authentication is disabled), as login accounts and the associated passwords are stored on the N60 device. In this case, access is not user-attributable. In cases where user-attributable access is required, especially for auditable processes for compliance reasons, use server authentication (RADIUS) only.

No password or security information is displayed in plain text by the EnerVista software or the UR device, nor are they ever transmitted without cryptographic protection.

NOTE

Only (TCP/UDP) ports and services that are needed for device configuration and for customer enabled features are open. All the other ports are closed. For example, Modbus is on by default, so its TCP port 502, is open. But if Modbus is disabled, port 502 is closed. This function has been tested and no unused ports have been found open.

When CyberSentry is enabled, Modbus communications over Ethernet is encrypted for all roles but for the Observer. The built-in Observer role has read-only access to data over Modbus over Ethernet without authentication. Encrypted Modbus communication over Ethernet is not always tolerated by SCADA systems. The UR has a bypass access feature for such situations, which allows unencrypted Modbus over Ethernet. The **Bypass Access** setting is available on the **SETTINGS ⇨ PRODUCT SETUP ⇨ SECURITY ⇨⇩ SUPERVISORY** screen. Note that other protocols (DNP, 101, 103, 104, EGD) are not encrypted, and they are good communications options for SCADA systems when CyberSentry is enabled.

When using the rear RS485 port and CyberSentry, registers can be read with a maximum buffer of 64 bytes. Settings may not be written, so use another port or configure the **SERIAL INACTIVITY TIMEOUT** setting to a high value, such as eight minutes, to give the relay enough time to finish the task.

CyberSentry settings through EnerVista

CyberSentry security settings are configured under **Settings > Product Setup > Security**.

Figure 5-3: Security panel when CyberSentry installed

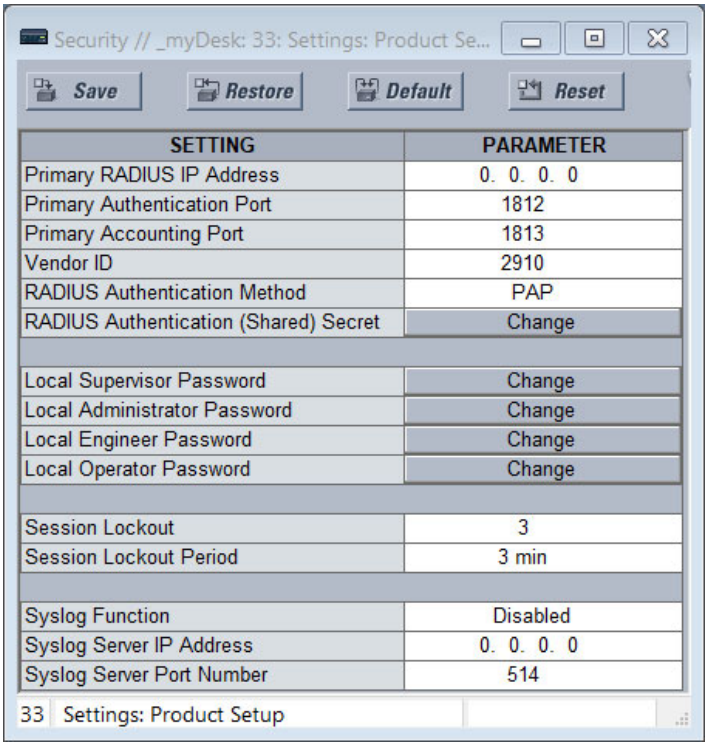

SETTING	PARAMETER
Primary RADIUS IP Address	0. 0. 0. 0
Primary Authentication Port	1812
Primary Accounting Port	1813
Vendor ID	2910
RADIUS Authentication Method	PAP
RADIUS Authentication (Shared) Secret	Change
Local Supervisor Password	Change
Local Administrator Password	Change
Local Engineer Password	Change
Local Operator Password	Change
Session Lockout	3
Session Lockout Period	3 min
Syslog Function	Disabled
Syslog Server IP Address	0. 0. 0. 0
Syslog Server Port Number	514

For the **Device > Settings > Product Setup > Supervisory** option, the panel looks like the following.

Figure 5-4: Supervisory panel

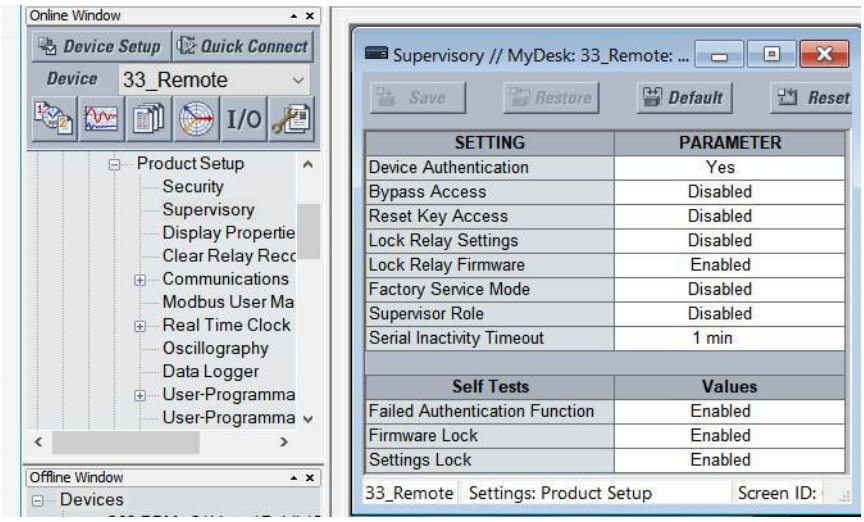

For the Security panel, the following settings are available.

Table 5-1: RADIUS server settings

Setting name	Description	Minimum	Maximum	Default	Units	Minimum permission
Primary RADIUS IP Address	IP address of the main RADIUS server. Default value indicates no Primary RADIUS server is configured, and hence RADIUS is disabled. Restart the relay for any change to take effect.	0.0.0.0	223.255.255.254	0.0.0.0	-	Administrator
Primary Authentication Port	RADIUS authentication port	1	65535	1812	-	Administrator
Primary Accounting Port	RADIUS accounting port	1	65535	1813	-	Administrator
Vendor ID	An identifier that specifies RADIUS vendor-specific attributes used with the protocol			Value that represents General Electric		Administrator
RADIUS Authentication Method	Authentication method used by RADIUS server	EAP-TTLS	PAP	EAP-TTLS	-	Administrator
RADIUS Authentication (Shared) Secret	Shared secret used in authentication. It displays as asterisks. This setting must meet the CyberSentry password requirements.	See the Password Requirements section earlier in this chapter	See the following password section for requirements	N/A	-	Administrator
Confirm RADIUS Authentication (Shared) Secret	Confirmation of the shared secret. The entry displays as asterisks.	See the Password Requirements section	245 characters	N/A	-	Administrator

Table 5-2: General security settings

Setting name	Description	Minimum	Maximum	Default	Units	Minimum permission
Session Lockout	Number of failed authentications before the device blocks subsequent authentication attempts for the lockout period	0 (lockout disabled)	99	3	-	Administrator

Setting name	Description	Minimum	Maximum	Default	Units	Minimum permission
Session Lockout Period	The period in minutes that a user is prevented from logging in after being locked out	0 (no period)	9999	3	min	Administrator
Device Authentication	When enabled, local Device authentication with roles is allowed. When disabled, the UR only authenticates to the AAA server (RADIUS). **NOTE:** Administrator and Supervisor (if still enabled) remain active even after Device authentication is disabled. The only permission for local Administrator is to re-enable Device authentication when Device authentication is disabled. To re-enable Device authentication, the Supervisor unlocks the device for setting changes, and then the Administrator can re-enable Device authentication.	Disabled	Enabled	Enabled	-	Administrator
Factory Service Mode	When enabled, the device can go into factory service mode. To enable, Supervisor authentication is necessary.	Disabled	Enabled	Disabled	-	Supervisor (Administrator when Supervisor is disabled)
Lock Settings	When disabled, the device allows modification of settings. To enable, Supervisor authentication is necessary.	Disabled	Enabled	Disabled	-	Supervisor (Administrator when Supervisor is disabled)
Lock Firmware	When enabled, the device denies firmware upload. To change setting, Supervisor authentication is necessary.	Disabled	Enabled	Disabled	-	Supervisor (Administrator when Supervisor is disabled)
Restore to Defaults	Sets the device to factory defaults	No	Yes	No	-	Administrator
Supervisor Role	When enabled, the Supervisor role is active. To enable, Administrator authentication is necessary. When disabled, the Supervisor role is inactive. To disable, Supervisor authentication is necessary.	Disabled	Enabled	Enabled	-	Administrator to enable and Supervisor to disable
RADIUS user names	Ensures that RADIUS user names are not the same as local/device role names	See RADIUS server documents	See RADIUS server documents		-	Administrator
Password	Local/device roles except for Observer are password-protected. All RADIUS users are password-protected.	See the Password Requirements section earlier in this chapter	See the following password section for requirements	Change Me1#	Text	The specified role and Administrator, except for Supervisor, where it is only itself

5

Table 5-3: Security alarm settings

Setting name	Description / Details	Min	Max	Default	Units	Minimum permissions
Failed Authentications	A threshold number indicating when an alarm is set off to indicate too many failed authentication attempts	Disabled	Enabled	Enabled	-	Administrator
Firmware Lock	A value indicating if the device can receive a firmware upgrade. If Enabled and a firmware upgrade attempt is made, the device alarm activates. If Disabled, the device alarm does not activate. On each firmware upgrade this setting goes back to the default.	Disabled	Enabled	Enabled	-	Administrator

Setting name	Description / Details	Min	Max	Default	Units	Minimum permissions
Settings Lock	A value indicating if the device can accept any settings changes. If Enabled and a settings change attempt is made, the device alarm activates. If Disabled, the device alarm does not activate.	Disabled	Enabled	Enabled	-	Supervisor (Administrator if Supervisor has been disabled)

CyberSentry settings through the front panel

SETTINGS ⇨ PRODUCT SETUP ⇨ SECURITY

■ SECURITY ■	⇔	LOGIN: None	Range: Administrator, Engineer, Supervisor, Operator, Factory (for factory use only), None
	⇕	■ CHANGE DEVICE ■ PASSWORD	See page 5-19
	⇕	LOGOUT: No	Range: FlexLogic operand
	⇕	DEVICE AUTHENTICATION: Yes	Range: Yes, No
	⇕	FACTORY SERVICE MODE: Disabled	Range: Enabled, Disabled
	⇕	■ SESSION ■ SETTINGS	See page 5-19
	⇕	■ RESTORE DEFAULTS ■	See page 5-20
	⇕	■ SYSLOG ■ SETTINGS	See page 5-20
	⇧	■ SUPERVISORY ■	See page 5-20

LOGIN — This setting is applicable for Device authentication only. This setting allows a user to log in with a specific role, as outlined here. For the Supervisor role, enable the "Supervisor Role" setting. Log out by right-clicking the device in EnerVista and selecting the **Disconnect** option.

Whenever a new role is logged in, the user is prompted to enter a password. Passwords must obey the requirements specified earlier in the chapter in the Password Requirements section.The UR device supports five roles. Roles have their corresponding passwords, except the Observer role, which does not require a password. There are no time-outs for the Administrator, Engineer, Operator, and Supervisor when logged in using the front panel; log out manually or use the **Command > Security** commands in the software.

The roles are defined as follows:

- Administrator — Complete read/write access to all settings and commands. This role does not allow concurrent access. This role has an operand to indicate when it is logged on.
- Engineer — Complete read/write access to all settings and commands except configuring Security settings and firmware upgrades. This role does not allow concurrent access.
- Operator — The Operator has read/write access to all settings under the Commands menu/section. This role does not exist offline.
- Supervisor — This is only an approving role. This role's authentication commits setting changes submitted by Administrator or Engineer. The Supervisor role authenticates to unlock the UR relay for setting changes and not approve changes after the fact. Only a Supervisor can set the Settings Lock and Firmware Lock in the Security settings. This role also has the ability to forcefully log off any other role and clear the security event log. This role can also be disabled, but only through a Supervisor authentication. When this role is disabled its permissions are assigned to the Administrator role.

- Observer — This role has read-only access to all N60 settings. This role allows concurrent Observer access but it has no download access to any files on the device. Observer is the default role if no authentication has been done to the device. This role displays as "None" on the front panel. When local authentication is used, no password is required for this role. When RADIUS server authentication is used, a password is required.

CLIENT AUTHENTICATION — SSH Client authentication is available from firmware version 8.50. If **CLIENT AUTHENTICATIO** is enabled, then the passcode will be required for the client to connect to the device over SSH.

If Client authentication is disabled, then any client can connect to device without passcode. In that case, 3rd party clients can connect to the device as before.

CLIENT PASSCODE— The client passcode is a string can be configured in UR device under "Administrator" role. It can be configured from front panel as well as EnerVista UR Setup. The client passcode will follow password complexity rules.

- The default passcode is **SSHpassphrase1#**.
- The passcode is not stored in clear text but will be securely stored with salted hash mechanism.
- Administrator can modify the SSH passcode from the UR software or the front panel, the existing SSH passcode will be required to enter first.
- When the device is set the the factory default as outlined later in SERVICE COMMAND, the relay settings, user password as well as SSH passcode will all be set to default.
- This SSH passcode should be retained in case of power cycle as well as firmware upgrade.
- The SSH passcode will be same for all clients.

NOTE

The Factory service role is not available. It is for factory use only. The **FACTORY SERVICE MODE** setting must be enabled for access.

The Local Access Denied message on the front panel can mean that you need to log in to the UR in order to complete the action.

5

Change device password

SETTINGS ⇨ PRODUCT SETUP ⇨ SECURITY ⇨⇩ CHANGE DEVICE PASSWORD

■ CHANGE DEVICE ■ PASSWORD	⇔	NEW PASSWORD:	Range: 20 alphanumeric characters
	⇧	CONFIRM PASSWORD:	Range: 20 alphanumeric characters

The menu displays on the front panel upon successful login of the Administrator role.

Passwords are stored in salted hash format.

NOTE

In Device authentication mode, the Observer role does not have a password associated with it. In Server authentication mode the Observer role requires a password.

If you are locked out of the software, reset the device to factory defaults as outlined later for **COMMANDS ⇨⇩ RELAY MAINTENANCE ⇨ SERVICE COMMAND**. When using CyberSentry, the default password is "ChangeMe1#".

Once the passwords are set, the Administrator with Supervisor approval can change the role-associated password.

Session settings

SETTINGS ⇨ PRODUCT SETUP ⇨ SECURITY ⇨⇩ SESSION SETTINGS

■ SESSION ■ SETTINGS	⇔	SESSION LOCKOUT: 3	Range: 0 to 99
	⇧	SESSION LOCKOUT PERIOD: 3 min	Range: 0 to 9999 minutes

SESSION LOCKOUT — This setting specifies the number of failed authentications before the device blocks subsequent authentication attempts for the lockout period. A value of zero means lockout is disabled.

SESSION LOCKOUT PERIOD — This setting specifies the period of time in minutes of a lockout period. A value of 0 means that there is no lockout period.

Restore defaults

SETTINGS ⇨ PRODUCT SETUP ⇨ SECURITY ⇨⇩ RESTORE DEFAULTS

■ RESTORE DEFAULTS ■	⇔	LOAD FACTORY DEFAULTS: No	Range: Yes, No

LOAD FACTORY DEFAULTS — This setting is used to reset all the settings, communication, and security passwords. An Administrator role is used to change this setting and a Supervisor role (if not disabled) approves it.

Syslog settings

SETTINGS ⇨ PRODUCT SETUP ⇨ SECURITY ⇨⇩ SYSLOG SETTINGS

■ SYSLOG ■ SETTINGS	⇔	SYSLOG FUNCTION: Disable	Range: Enable, Disable
	⇩	SYSLOG IP ADDRESS: 0.0.0.0	Range: 0.0.0.0 to 223.255.255.255
	⇩	SYSLOG PORT NUMBER: 514	Range: 1 to 65535

5

SYSLOG FUNCTION — This setting allows the Syslog functionality to be enabled or disabled in the N60.

SYSLOG IP ADDRESS — The IP address of the target Syslog server to which all security events are transmitted.

SYSLOG PORT NUMBER — The UDP port number of the target Syslog server to which all security events are transmitted.

Figure 5-5: Example of the Syslog data

Date	Time	Priority	Hostname	Message
11-30-2022	15:32:51	Auth.Info	192.168.100.33	1 2022-11-30T13:02:55.58Z UR7 - - - auth[9339030]: Info: Event_Log 56, Nov 30 2022 15:32:46.878719, 840, 2, 1, 5, 0.0.0.0, 0, 1, 00FF0C75F508, GDC653T3E, , 56, Nov 30 2022 15:32:55.341216
11-30-2022	15:32:50	Auth.Info	192.168.100.33	1 2022-11-30T13:02:54.49Z UR7 - - - auth[935bfb0]: Info: Security_Log 92, Nov 30 2022 15:32:53.993304, Administrator, 10.130.42.191, 1, 15, 5
11-30-2022	15:32:42	Auth.Notice	192.168.100.33	1 2022-11-30T13:02:47.34Z UR7 - - - auth[8f7d708]: Notice: Security_Log 91, Nov 30 2022 15:32:46.878719, Administrator, 10.130.42.191, 1, 6, 5
11-30-2022	15:32:42	Auth.Info	192.168.100.33	1 2022-11-30T13:02:47.09Z UR7 - - - auth[8f7d708]: Info: Nov 30 2022 15:32:46.878719, Disabled, Local and Remote, Bypass Access, 0x332C
11-30-2022	15:32:42	Auth.Warning	192.168.100.33	1 2022-11-30T13:02:47.09Z UR7 - - - auth[8f7d708]: Warning: Security_Log 90, Nov 30 2022 15:32:46.641219, Administrator, 10.130.42.191, 1, 25, 5
11-30-2022	15:31:46	Auth.Info	192.168.100.33	1 2022-11-30T13:01:51.13Z UR7 - - - auth[935bfb0]: Info: Security_Log 89, Nov 30 2022 15:31:50.641221, Administrator, 10.130.42.191, 1, 14, 5

Supervisory

SETTINGS ⇨ PRODUCT SETUP ⇨ SECURITY ⇨⇩ SUPERVISORY

■ SUPERVISORY ■	⇔	DEVICE AUTHENTICATION: Yes	Range: Yes, No
	⇩	BYPASS ACCESS: Disabled	Range: Local, Remote, Local and Remote, Disabled, Pushbuttons
	⇩	RESET KEY ACCESS: Disabled	Range: Enabled, Disabled
	⇩	FACTORY SERVICE MODE: Disabled	Range: Enabled, Disabled

⇕	■ SELF TESTS ■	See below
⇕	SUPERVISOR ROLE: Disabled	Range: Enabled, Disabled
⇕	SERIAL INACTIVITY TIMEOUT: 1 min	Range: 1 to 9999 minutes
⇕	LOCK SETTINGS: Disabled	Range: Enabled, Disabled
⇧	LOCK FIRMWARE: Enabled	Range: Enabled, Disabled

The Supervisory menu settings are available for Supervisor role only, or if the Supervisor role is disabled then for the Administrator role only.

DEVICE AUTHENTICATION — This setting is enabled by default, meaning "Yes" is selected. When enabled, Device authentication with roles is enabled. When this setting is disabled, the UR only authenticates to the AAA server (RADIUS). However, the Administrator and Supervisor (when enabled) remain active even after device authentication is disabled and their only permission is to re-enable Device authentication. To re-enable Device authentication, the Supervisor unlocks the device for settings changes, then the Administrator re-enables device authentication.

BYPASS ACCESS — The bypass security feature provides an easier access, with no authentication and encryption for those special situations when this is considered safe. Only the Supervisor, or the Administrator when the Supervisor role is disabled, can enable this feature.

Mode	Front panel or serial (RS232, RS485)	Ethernet
Normal mode	Authentication — Role Based Access Control (RBAC) and passwords in clear	Authentication — RBAC and passwords encrypted SSH tunneling
Bypass access mode	No passwords for allowed RBAC levels	No passwords for allowed RBAC levels No SSH tunneling

The bypass options are as follows:

- Local — Bypasses authentication for push buttons, keypad, and RS232
- Remote — Bypasses authentication for RS485 and Ethernet
- Local and Remote — Bypasses authentication for push buttons, keypad, RS232, RS485, and Ethernet
- Pushbuttons — Bypasses authentication for front panel push buttons, including in the software. On the graphical front panel, the authentication for side pushbuttons to control breakers and disconnects also is bypassed.

With **BYPASS ACCESS** set to other than "Disabled," the software displays a message that **LOCK SETTINGS** is ignored.

RESET KEY ACCESS — Indicates whether user authentication is required for executing the **RESET** button on the front panel or the front panel in the software. When Disabled, user authentication is required at the Administrator or Engineer level. When Enabled, any user can execute the **RESET** command without authentication. A Supervisor, or the Administrator if the Supervisor role is disabled, can enable this feature.

FACTORY SERVICE MODE — This setting allows access by GE support staff to be turned on and off. When Enabled, the device can go into factory service mode. A Supervisor role is necessary to enable the setting, and otherwise an Administrator role when the Supervisor role is disabled. The default value is Disabled.

An event is generated when disabling and enabling, and the TROUBLE LED activates when enabled. The factory service user enters a password that is unique for each device.

When a factory service user is logged in on the front panel, a remote user cannot access the device at the same time.

A factory service user is logged out with any of the following circumstances:

- UR restarts
- Factory Service Mode setting is disabled by Administrator or factory service user
- When a non-factory service user logs in via front panel or serial connection

SUPERVISOR ROLE — When Enabled, the Supervisor role is active. To Disable this setting a Supervisor authentication is necessary. If disabled, the Supervisor role is not allowed to log in. In this case, the Administrator can change the settings under the Supervisory menu.

If enabled, Supervisor authentication is required to change the settings in the Supervisory menu. If the Supervisor disables their role after authentication, the Supervisor session remains valid until they switch to another role using MMI or until they end the current Supervisor session if using communications.

This role is disabled by default.

SERIAL INACTIVITY TIMEOUT — The role logged via a serial port is auto logged off after the Serial Inactivity timer times out. A separate timer is maintained for RS232 and RS485 connections. Set this value to a high number, such as eight minutes, when using the rear RS485 terminals for settings write.

GE recommends setting this value to at least 3 minutes for the following scenario: while connected to a CyberSentry device, with serial or USB cable connected to the front panel, and performing "Add Device to Offline Window" or an online/offline comparison. With less than the recommended 3 minutes, the serial activity timeout interrupts the connection and the security role login window appears. Upon login, the process resumes.

LOCK SETTINGS — Specifies whether the device accepts settings changes, with a default of Disabled to allow changes. The Supervisor role Disables this setting for the relay to start accepting setting changes or command changes. After all the setting changes are applied or commands executed, the Supervisor then Enables the setting to lock setting changes.

When set to "Enabled," all other settings in the Supervisory window cannot be edited. Any setting changes on other Modbus screens and IEC 61850 screens cannot be saved to the relay.

When the **BYPASS ACCESS** setting is set to a local or remote option, it overrides **LOCK SETTINGS** and allows changes.

LOCK FIRMWARE — Specifies whether the device accepts a firmware upgrade, with a default of Enabled to deny upgrade. The Supervisor role Disables this setting to allow upgrades. After the upgrade, the Supervisor then Enables the setting to prevent upgrades.

When the **BYPASS ACCESS** setting is set to a local or remote option, it overrides **LOCK FIRMWARE** and allows changes.

Self-tests

SETTINGS ⇨ PRODUCT SETUP ⇨ SECURITY ⇨⇩ SUPERVISORY ⇨ SELF TESTS

■ SELF TESTS ■	⇔	■ FAILED ■ AUTHENTICATE	See below
	⇩	FIRMWARE LOCK: Enabled	Range: Enabled, Disabled
	⇧	SETTINGS LOCK: Enabled	Range: Enabled, Disabled

FAILED AUTHENTICATE — If this setting is Enabled then the number of failed authentications is compared with the Session Lockout threshold. When the Session Lockout threshold is exceeded, this minor alarm indication comes up.

FIRMWARE LOCK — If this setting is Enabled, then any firmware upgrade operation attempt when the **LOCK FIRMWARE** setting is enabled brings up this self test alarm.

SETTINGS LOCK — If this setting is Enabled then an unauthorized write attempt to a setting for a given role activates this self test.

SETTINGS ⇨ PRODUCT SETUP ⇨ SECURITY ⇨⇩ SUPERVISORY ⇨ SELF TESTS ⇨ FAILED AUTHENTICATE

■ FAILED ■ AUTHENTICATE	⇔	FAILED AUTHENTICATE: Enabled	Range: Enabled, Disabled

CyberSentry setup

When first using CyberSentry security, use the following procedure for setup.

1. Log in to the relay as Administrator by using the **VALUE** keys on the front panel to enter the default password "ChangeMe1#". Note that the **LOCK SETTINGS** setting needs to be disabled (default) in the **SETTINGS ⇨ PRODUCT SETUP ⇨ SECURITY ⇨⇩ SUPERVISORY** menu.

2. Enable the Supervisor role if you have a need for it.
3. Make any required changes in configuration, such as setting a valid IP address for communication over Ethernet.
4. Log out of the Administrator account by choosing None.
5. Next, Device or Server authentication can be chosen on the login screen, but the choice is available only in EnerVista. Use Device authentication to log in using the five pre-configured roles (Administrator, Supervisor, Engineer, Operator, Observer). When using a serial connection, only Device authentication is supported. When Server authentication is required, characteristics for communication with a RADIUS server must be configured. This is possible only in the EnerVista software. The RADIUS server itself also must be configured. The appendix called RADIUS Server at the end of this instruction manual gives an example of how to set up a simple RADIUS server. Once both the RADIUS server and the parameters for connecting the UR to the server have been configured, you can choose Server authentication on the login screen of EnerVista.

NOTICE The use of CyberSentry for devices communicating through an Ethernet-to-RS485 gateway is not supported. Because these gateways do not support the secure protocols necessary to communicate with such devices, the connection cannot be established. Use the device as a non-CyberSentry device.

Users logged in through the front panel are not timed out and cannot be forcefully logged out by a supervisor. Roles logged in through the front panel that do no allow multiple instances (Administrator, Supervisor, Engineer, Operator) must switch to None (equivalent to a logout) when they are done in order to log out.

For all user roles except Observer, only one instance can be logged in at a time, for both login by front panel and software.

To configure Server authentication:

1. In the EnerVista software, choose Device authentication and log in as Administrator.
2. Configure the following RADIUS server parameters: IP address, authentication port, shared secret, and vendor ID.
3. On the RADIUS server, configure the user accounts. Do not use the five pre-defined roles as user names (Administrator, Supervisor, Engineer, Operator, Observer) in the RADIUS server. If you do, the UR relay automatically provides the authentication from the device.
4. In the EnerVista software, choose Server authentication and log in using the user name and password configured on the RADIUS server for Server authentication login.
5. After making any required changes, log out.

NOTICE When changing settings offline, ensure that only settings permitted by the role that performs the settings download are changed because only those changes are applied.

Pushbuttons (both user-control buttons and user-programmable buttons) located on the front panel can be pressed by an Administrator or Engineer role. This also applies to the **RESET** button, which resets targets, where targets are errors displayed on the front panel or the Targets panel of the EnerVista software. The **RESET** button has special behavior in that it allows these two roles to press it even when they are logged in through the RS232 port and not through the front panel.

To reset the security event log and self-test operands:

1. Log in as Supervisor (if the role is enabled) or Administrator (if the Supervisor role is disabled) and execute a clear security command under **Commands > Security > Clear Security**.

Security events

The security events produced when the CyberSentry option is purchased are sent as sytem log (syslog) messages to a syslog server, if one is configured. The format is as follows.

	Security log	Event Number	Date & Timestamp	Username	IP address	Role	Category	LogType	Activity Value	Event Result

Event Number — Event identification number (index)

Date & Timestamp — UTC date and time

Username — 255 chars maximum, but in the security log it is truncated to 20 characters

IP address — Device IP address

Role — 16 bit unsigned, of type format F617

Enumeration	Role
0	None
1	Administrator
2	Supervisor
3	Engineer
4	Operator
5	Factory

Category — Based on IEC62443-402 CR2.8

a) Access Control
b) Request Error
c) Control System event
d) Backup and Restore event
e) Configuration Changes
f) Audit Log event

LogType — Fixed string: "IEC62351-14"

Activity Value — 16 bit unsigned

5

Activity Value/ Event ID	Event Result	Category
1	Authentication Failed	a) Access Control
2	User Lockout	a) Access Control
3	FW Upgrade	e) Configuration Changes
4	FW Lock	a) Access Control
5	Settings Lock	a) Access Control
6	Settings Change. Because this can fill the entire event log, it is supported by the already existing Settings_Change.log file. This event is not required.	e) Configuration Changes
7	Clear Oscillography command	c) Control System event
8	Clear Data Logger command (not applicable to all UR products)	c) Control System event
9	Clear Demand Records command (not applicable to all UR products)	c) Control System event
10	Clear Energy command (not applicable to all UR products)	c) Control System event
11	Clear Unauthorized Access command	a) Access Control
12	Clear Teleprotection Counters command (not applicable to all UR products)	c) Control System event
13	Clear All Relay Records command	c) Control System event
14	Role Log in	a) Access Control
15	Role Log out	a) Access Control
16	WRITE_SETTING_FILE	e) Configuration Changes
17	Factory Mode enabled	f) Audit Log event
18	Factory Mode disabled	f) Audit Log event
19	FW file validation successful	f) Audit Log event
20	FW file validation failed	b) Request Error
21	Supervisor password changed	e) Configuration Changes

Activity Value/ Event ID	Event Result	Category
22	Administrator password changed	e) Configuration Changes
23	Engineer password changed	e) Configuration Changes
24	Operator password changed	e) Configuration Changes
25	Bypass mode activated	a) Access Control
26	Bypass mode deactivated	a) Access Control
27	SSH client passcode change	e) Configuration Changes
28	Successful client authentication	a) Access Control
29	Failed client authentication	a) Access Control
30	CERT_V_FORMAT	f) Audit Log events
31	CERT_PK_SIG_ALG	f) Audit Log events
32	CERT_V_PK_EXPIRED	f) Audit Log events
33	CERT_V_PK_EARLY	f) Audit Log events

In addition to supporting syslog, a N60 with CyberSentry also saves the security events in two local security files, these being SECURITY_EVENTS.CSV and SETTING_CHANGES.LOG. Details on these files and how to retrieve them are available in the EnerVista software under **Maintenance > Retrieve File**. Depending on the level of criticality/severity, a syslog server or a reporting tool gathering information from a syslog server can produce reports, charts, and so on. All severity levels are per RFC 5424.

Table 5-4: CyberSentry system events recorded

Event	Severity	Description
FAILED_AUTH, ORIGIN, TIMESTAMP	Notice (5)	A failed authentication with origin information (username and IP:MAC address), a time stamp in UTC time when it occurred
AUTH_LOCKOUT, ORIGIN, TIMESTAMP	Warning (4)	An authentication lockout has occurred because of too many failed authentication attempts
FIRMWARE_UPGD, ORIGIN, TIMESTAMP	Information (6)	Indicates that a change of firmware has occurred
FIRMWARE_LOCK, ORIGIN, TIMESTAMP	Warning (4)	An attempt was made to change firmware while the firmware lock was enabled
SETTING_CHG, ORIGIN, TIMESTAMP	Notice (5)	Indicates setting change(s)
SETTING_LOCK, ORIGIN, TIMESTAMP	Warning (4)	An attempt was made to change settings while the settings lock was enabled
LOGIN, ORIGIN, TIMESTAMP	Information (6)	Indicates when a certain role logged in
LOGOUT, ORIGIN, TIMESTAMP	Information (6)	Indicates when a certain role logged out or timed out
CLEAR_OSCILLOGRAPHY	Notice (5)	Clear oscillography command was issued
CLEAR_DATA_LOGGER	Notice (5)	Clear data logger command was issued
CLEAR_DEMAND_RECS	Notice (5)	Clear demand records command was issued
CLEAR_ENERGY	Notice (5)	Clear energy command was issued
RESET_UNAUTH_ACCESS	Notice (5)	Reset Unauthorized access command was issued
CLEAR_TELEPROTECTION_CNT	Notice (5)	Clear teleprotection counters command was issued
CLEAR_ALL_RECS	Notice (5)	Clear all records command was issued
WRITE_SETTING_FILE	Notice (5)	Write settings file to the relay
BYPASS_ACTIVATE	Warning (4)	Bypass was activated (serial, keypad or both)
BYPASS_DEACTIVATE	Warning (4)	Bypass was deactivated
FACTORY_MODE_ENABLED	Warning (4)	Factory Service Mode activated
FACTORY_MODE_DISABLED	Warning (4)	Factory Service Mode deactivated
FW_FILE_VALIDATION_SUCCESSFUL	Information (6)	Firmware file signature validation successful
FW_FILE_VAILDATION_FAILED	Warning (4)	Firmware file signature validation failed
SUPERVISOR_PSWD_CHANGED	Notice (5)	Supervisor user account's password changed
ADMIN_PSWD_CHANGED	Notice (5)	Administrator user account's password changed

Event	Severity	Description
ENGINEER_PSWD_CHANGED	Notice (5)	Engineer user account's password changed
OPERATOR_PSWD_CHANGED	Notice (5)	Operator user account's password changed

5.3.2 Display properties

SETTINGS ⇨ PRODUCT SETUP ⇨⇩ DISPLAY PROPERTIES

■ DISPLAY ■ PROPERTIES	⇔	**LANGUAGE: English**	Range: English; English, French; English, Russian; English, Chinese; English, German (examples; depends on order code) Visible when language other than English purchased
	⇩	**FLASH MESSAGE TIME: 1.0 s**	Range: 0.5 to 10.0 s in steps of 0.1
	⇩	**DEFAULT MESSAGE TIMEOUT: 300 s**	Range: 10 to 900 s in steps of 1
	⇩	**DEFAULT MESSAGE INTENSITY: 25 %**	Range: 25%, 50%, 75%, 100% Visible when a VFD is installed
	⇩	**SCREEN SAVER FEATURE: Disabled**	Range: Disabled, Enabled Visible when an LCD is installed
	⇩	**SCREEN SAVER WAIT TIME: 30 min**	Range: 1 to 65535 min. in steps of 1 Visible when an LCD is installed
	⇩	**CURRENT CUT-OFF LEVEL: 0.020 pu**	Range: 0.002 to 0.020 pu in steps of 0.001
	⇧	**VOLTAGE CUT-OFF LEVEL: 1.0 V**	Range: 0.1 to 2.0 V secondary in steps of 0.1

5

Some relay messaging characteristics can be modified to suit different situations using the display properties settings.

LANGUAGE — This setting selects the language used to display settings, actual values, and targets. This setting displays when a language other than English was purchased, and the range depends on the order code of the relay.

For Japanese, the settings display in Japanese on the graphical front panel, while the keys printed on the panel are in English.

For Japanese and Chinese, up to 10 characters can be input in a field on the graphical front panel, not 20.

With the graphical front panel, the language can be changed regardless of the language purchased. That is, all languages can be used. If you select a language with which you are unfamiliar and want to switch back to English for example, the menu order remains the same. That is, Settings is always second, Product Setup is always first, Display Properties is always second, and Language is always first.

If the language is changed after entering user-configured names, such as relay names, the strings are not translated. For example, a relay name is entered in English, the language is changed to Japanese, and the relay name remains in English. Set the language before changing settings.

NOTE

Restart the relay after changing the **LANGUAGE** setting.

The language can be selected also for the front panel in EnerVista under **Maintenance > Change Front Panel**.

The language of the EnerVista software can be changed under **View > Language**. Languages supported by the operating system display; that is for Polish or Japanese to display, the software needs to be installed on a Polish or Japanese operating system.

FLASH MESSAGE TIME — Flash messages are status, warning, error, and information messages displayed in response to certain key presses during settings programming. These messages override any normal messages. Use this setting to change the duration of flash messages on the display.

DEFAULT MESSAGE TIMEOUT — If the keypad is inactive for a period of time, the relay automatically reverts to a default message. The inactivity time is modified using this setting to ensure that messages remain on the screen long enough during programming or reading of actual values. This setting is not supported on the graphical front panel.

DEFAULT MESSAGE INTENSITY — To extend phosphor life in the vacuum fluorescent display, the brightness can be attenuated during default message display. During keypad interrogation, the display always operates at full brightness. This setting is not supported on the graphical front panel.

SCREEN SAVER FEATURE and **SCREEN SAVER WAIT TIME** — These settings are only visible if the N60 has a liquid crystal display (LCD) and control its backlighting. When the **SCREEN SAVER FEATURE** is "Enabled," the LCD backlighting turns off after the **DEFAULT MESSAGE TIMEOUT** followed by the **SCREEN SAVER WAIT TIME**, provided that no keys have been pressed and no target messages are active. When a keypress occurs or a target becomes active, the LCD backlighting turns on. These settings are not supported on the graphical front panel.

CURRENT CUT-OFF LEVEL — This setting modifies the current cut-off threshold. Very low currents (1 to 2% of the rated value) are very susceptible to noise. Some customers prefer very low currents to display as zero, while others prefer the current to display even when the value reflects noise rather than the actual signal. The N60 applies a cut-off value to the magnitudes and angles of the measured currents. If the magnitude is below the cut-off level, it is substituted with zero. This applies to phase and ground current phasors as well as true RMS values and symmetrical components. The cut-off operation applies to quantities used for metering, protection, and control, as well as those used by communications protocols. Note that the cut-off level for the sensitive ground input is 10 times lower that the **CURRENT CUT-OFF LEVEL** setting value. Raw current samples available via oscillography are not subject to cut-off.

VOLTAGE CUT-OFF LEVEL — This setting modifies the voltage cut-off threshold. Very low secondary voltage measurements (at the fractional volt level) can be affected by noise. Some customers prefer these low voltages to be displayed as zero, while others prefer the voltage to be displayed even when the value reflects noise rather than the actual signal. The N60 applies a cut-off value to the magnitudes and angles of the measured voltages. If the magnitude is below the cut-off level, it is substituted with zero. This operation applies to phase and auxiliary voltages, and symmetrical components. The cut-off operation applies to quantities used for metering, protection, and control, as well as those used by communications protocols. Raw samples of the voltages available via oscillography are not subject to cut-off.

The **CURRENT CUT-OFF LEVEL** and the **VOLTAGE CUT-OFF LEVEL** are used to determine the metered power cut-off levels. The power cut-off level is calculated using the following equations. For Delta connections:

$$\text{3-phase power cut-off} = \frac{\sqrt{3} \times \textbf{CURRENT CUT-OFF LEVEL} \times \textbf{VOLTAGE CUT-OFF LEVEL} \times \text{VT primary} \times \text{CT primary}}{\text{VT secondary}} \qquad \textbf{Eq. 5-3}$$

For Wye connections:

$$\text{3-phase power cut-off} = \frac{3 \times \textbf{CURRENT CUT-OFF LEVEL} \times \textbf{VOLTAGE CUT-OFF LEVEL} \times \text{VT primary} \times \text{CT primary}}{\text{VT secondary}} \qquad \textbf{Eq. 5-4}$$

$$\text{per-phase power cut-off} = \frac{\textbf{CURRENT CUT-OFF LEVEL} \times \textbf{VOLTAGE CUT-OFF LEVEL} \times \text{VT primary} \times \text{CT primary}}{\text{VT secondary}} \qquad \textbf{Eq. 5-5}$$

where VT primary = VT secondary × VT ratio and CT primary = CT secondary × CT ratio.

For example, given the following settings:

CURRENT CUT-OFF LEVEL: "0.02 pu"
VOLTAGE CUT-OFF LEVEL: "1.0 V"
PHASE CT PRIMARY: "100 A"
PHASE VT SECONDARY: "66.4 V"
PHASE VT RATIO: "208.00 : 1"
PHASE VT CONNECTION: "Delta"

We have:

CT primary = "100 A", and
VT primary = **PHASE VT SECONDARY** × **PHASE VT RATIO** = 66.4 V x 208 = 13811.2 V

The power cut-off is therefore:

power cut-off= (**CURRENT CUT-OFF LEVEL** × **VOLTAGE CUT-OFF LEVEL** × CT primary × VT primary)/VT secondary
= ($\sqrt{3}$ × 0.02 pu × 1.0 V × 100 A × 13811.2 V) / 66.4 V
= 720.5 watts

Any calculated power value below this cut-off does not display. As well, the three-phase energy data do not accumulate if the total power from all three phases does not exceed the power cut-off.

NOTE

Lower the **VOLTAGE CUT-OFF LEVEL** and **CURRENT CUT-OFF LEVEL** with care as the relay accepts lower signals as valid measurements. Unless dictated otherwise by a specific application, the default settings of "0.02 pu" for **CURRENT CUT-OFF LEVEL** and "1.0 V" for **VOLTAGE CUT-OFF LEVEL** are recommended.

5.3.3 Graphical front panel

SOFTWARE OPTION

The graphical front panel is a hardware option.

Use the EnerVista software to configure the graphical front panel. The settings are not accessible from the graphical front panel.

The following screens are available:

- Home page
- Rolling mode
- Metering editor
- Single-line diagram editor
- Annunciator editor
- Configurable navigation

The settings menu itself and the event record pages are not configurable.

Multiple screens can be opened in the EnerVista software, but the first remains active and the others can be read-only. For example, the Annunciator Editor and Single Line Diagram Editor can be open and active, then subsequently opened Rolling Mode and Home Page screens are read-only. Close the windows, then re-open the one required.

5.3.3.1 Home page

This window sets the home page displayed on the graphical front panel and the date and time formats for all pages. Home page options include display of product information, alarms, actual values, and event records. In addition, the window allows selection of a FlexLogic operand that enables/disables local control of breakers and switches from the graphical front panel.

The path is **Settings > Product Setup > Graphical Panel > Home Page**. The menu does not display when there is no graphical front panel.

Figure 5-6: Home page with product information

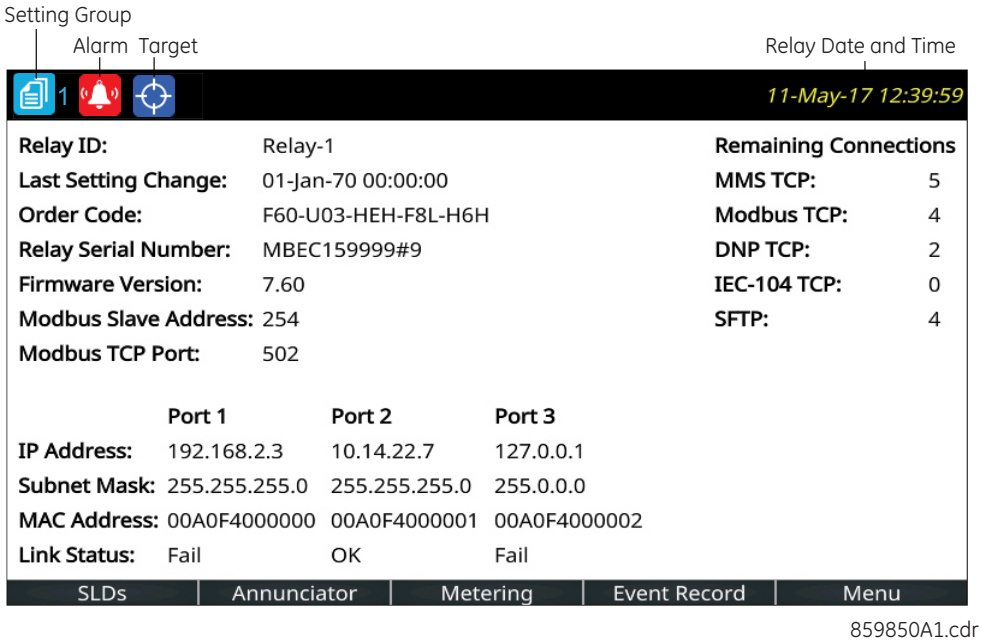

859850A1.cdr

Figure 5-7: Home page settings

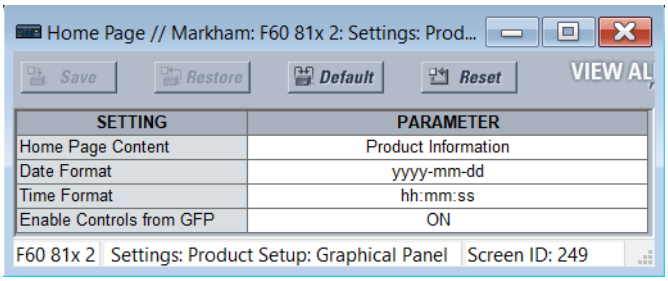

Home Page Content

Range: Product Information, SLD 1...5, Annunciator, Annunciator 1...8, Phasors 1...6, Tabular 1...5, Event Records, Targets

Default: Product Information

This setting specifies the page to display between the home page header and footer. Pressing the **Home** button returns the display to this page. The home page displays for the rolling mode delay specified, then changes to the rolling mode pages.

The "Annunciator" option without a page number specifies the first annunciator page in the following sequence:

- The first annunciator page that contains an annunciator window that is in alarm (fast flash)
- The first annunciator page that contains an annunciator window that is in ringback. Ringback is a "return alert." Visual and audible signals are given when conditions return to normal, then the sequence returns to normal by pushing the **RESET** button.
- The first annunciator page that contains an annunciator window that is in abnormal state
- Annunciator page 1

Whenever an annunciator window changes state this list is re-evaluated, which can result in the home page displaying a different annunciator page.

The Tabular option displays a configured actual values/metering page.

The Targets option displays error messages, such as wrong transceiver, similar to event record entries.

Date Format

Range: yyyy-mm-dd, dd-mmm-yy, yyyy/mm/dd, m/d/yyyy, m/d/yy, mm/dd/yy, mm/dd/yyyy, yy/mm/dd
Default: yyyy-mm-dd

This setting specifies the format for dates on the graphical front panel. It applies to the page header, the events records, the annunciator, and everywhere else a date displays on the panel. If the relay is synchronized to an external time source via PTP, IRIG-B, SNTP, and so on, the date/time is shown in white, and otherwise in yellow.

yyyy — four-digit year, for example 2017

yy — two-digit year, for example 17 for 2017

mmm — abbreviation of month name, for example Jan for January

mm — two-digit month, for example 01 for January

m — one or two-digit month, for example 1 for January and 10 for October

dd — two-digit day, for example 08

d — one or two-digit day, for example 8 and 28

To set the date and time, access **Synchronize Devices** in the software, synchronize to a time source using **Settings > Product Setup > Real Time Clock**, or synchronize to the computer using **Commands > Set Date and Time**.

Time Format

Range: hh:mm:ss, h:mm:ss tt
Default: hh:mm:ss

This setting specifies the format for time on the graphical front panel. It applies to the page header and everywhere else a time displays on the panel. When the Date Format and the Time Format use the defaults, the date and time are separated by the character "T" per the ISO convention, such as "2017-09-24T10:58:31". Otherwise the date and time are separated by a space. If the relay is synchronized to an external time source via PTP, IRIG-B, SNTP, and so on, the date/time is shown in white, and otherwise in yellow.

hh — two-digit hour, for example 02 for two o'clock

h — one or two-digit hour, for example 2 for two o'clock

mm — two-digit minute, for example 51 minutes

ss — two-digit second (can have a decimal and further digits appended), for example 16 seconds

tt — AM or PM based on 12 hour clock

If microseconds have to be displayed, for example, in the event records, the 24-hour clock is adopted. The representation of an accumulated period (for example hh:mm) is not affected by the selected time format.

To set the date and time, access **Synchronize Devices** in the software or synchronize to a time source using **Settings > Product Setup > Real Time Clock**.

Enable Controls From GFP

Range: FlexLogic operand
Default: ON

This setting enables/disables local control of breakers and switches from the graphical front panel.

The FlexLogic operand assigned to this setting applies to controls of all the single-line diagram pages. The assigned operand status is reflected in the ENABLE CTRL FROM GFP FlexLogic operand.

When the operand assigned to this setting is ON, controls are enabled, as indicated on a single-line diagram with an Enable Control label. Pressing the side pushbutton next to the label populates the front panel display with control soft keys.

When the operand assigned to this setting is OFF, controls are disabled, and the Enable Control label does not display.

If already in control mode and the operand status assigned to this setting changes to OFF, at the confirmation prompt the control command is not issued and the SLD screen goes to the top SLD page instead.

5.3.3.2 Rolling mode

After a user-defined period of inactivity, the graphical front panel changes, or rolls, to user-selected pages. Up to 10 pages can be specified. Similarly, the display backlight intensity is lowered to a specified level; lower intensity extends the life of the display.

Each rolling page displays for a few seconds; duration cannot be set.

The path is **Settings > Product Setup > Graphical Panel > Rolling Mode**.

Figure 5-8: Rolling mode settings

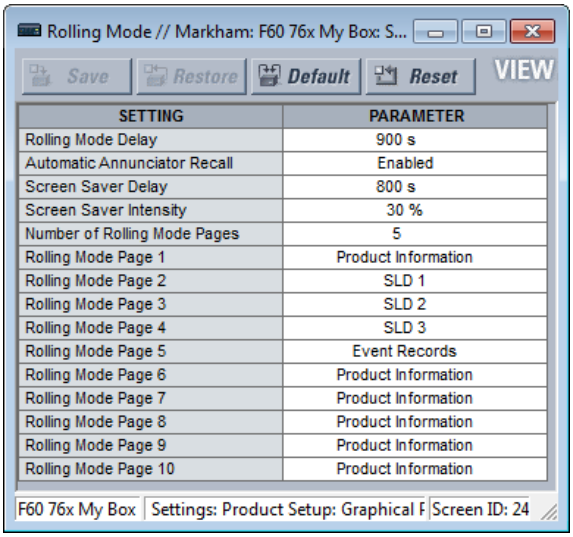

SETTING	PARAMETER
Rolling Mode Delay	900 s
Automatic Annunciator Recall	Enabled
Screen Saver Delay	800 s
Screen Saver Intensity	30 %
Number of Rolling Mode Pages	5
Rolling Mode Page 1	Product Information
Rolling Mode Page 2	SLD 1
Rolling Mode Page 3	SLD 2
Rolling Mode Page 4	SLD 3
Rolling Mode Page 5	Event Records
Rolling Mode Page 6	Product Information
Rolling Mode Page 7	Product Information
Rolling Mode Page 8	Product Information
Rolling Mode Page 9	Product Information
Rolling Mode Page 10	Product Information

Rolling Mode Delay

Range: 0 to 900 s in steps of 1
Default: 300 s

Set this delay to 0 to disable the rolling mode feature.

Otherwise, after no pushbutton has been pressed for the amount of time specified by this setting, the display automatically enters rolling mode. While in the rolling mode, the Rolling Mode Pages display. Rolling mode can be interrupted when a setting changes, such as changing the home page, then resumes rolling.

Automatic Annunciator Recall

Range: Enabled, Disabled
Default: Enabled

When Enabled, an annunciator window changes state, and the display is in rolling mode, this setting terminates rolling mode and displays the annunciator page containing the changed state.

The Configurable Navigation feature takes precedence over this setting when the Automatic Annunciator Recall and Configurable Navigation are activated by the same input.

Screen Saver Delay

Range: 0 to 900 s in steps of 1
Default: 300 s

The screen saver mode extends the life of the display. After the amount of time set here, the screen saver activates and the display intensity is reduced to the level set by the **Screen Saver Intensity** setting. When in rolling mode, rolling continues while the screen saver is active. The screen saver terminates when rolling mode terminates. To disable the screen saver, set the delay to 0.

Screen Saver Intensity

Range: 0, 10, 20, or 30 %

Default: 30 %

This setting sets the brightness of the display while the screen saver is active. For example, 0% means that the screen is dark and nothing displays. Pressing a pushbutton or changing a setting in the software, for example, re-activates the display.

Number of Rolling Mode Pages

Range: 1 to 10 in steps of 1

Default: 1

This setting specifies the number of rolling pages. During rolling mode, the graphical front panel displays pages from 1 to the selected number.

Rolling Mode Page 1 to 10

Range: Product Information, SLD 1...5, Annunciator, Annunciator 1...8, Phasors 1...6, Tabular 1...5, Event Records, Targets

Default: Product Information

These settings specify the pages to display on the graphical front panel while in rolling mode.

The "Annunciator" selection without a page number specifies the first annunciator page in the following sequence:

- The first annunciator page that contains an annunciator window that is in alarm (fast flash)
- The first annunciator page that contains an annunciator window that is in ringback. Ringback is a "return alert." Visual and audible signals are given when conditions return to normal, then the sequence returns to normal by pushing the **RESET** button.
- The first annunciator page that contains an annunciator window that is in abnormal state
- Annunciator page 1

Whenever an annunciator window changes state the list is re-evaluated, which can result in the display of a different annunciator page in the rolling sequence.

The Tabular option displays a configured actual values/metering page.

The Targets option displays error messages, such as wrong transceiver, similar to event record entries.

5.3.3.3 Metering editor

This feature creates tables of actual/metered values for the graphical front panel. It configures the content that displays in the Metering Tab pushbutton. An actual value, status, or text can be displayed. Five tabular metering pages can be configured. There also can be a phasor page for each configured AC source, and these pages are not configurable.

The path is **Settings > Product Setup > Graphical Panel > Metering Editor**.

Set the Current Page, Page Name, Layout, configure the top inputs, then the cells. The 16 inputs at the top of the page are used as inputs for the **Status Index** fields. Click the **Preview** button to view the page.

For a phasor diagram, configure the source under **Settings > System Setup > Signal Sources**. The diagram is then viewable by pushing the **Metering** Tab pushbutton on the graphical front panel. The Metering Editor is not used for these phasor diagrams.

The figures show setup and table preview.

The Cells configured are not retained when using the **Convert Device Settings** function, for example when converting a file in the Offline Window from version 7.6 to 7.7.

Figure 5-9: Metering Editor window

Save | Restore | Default | Reset | VIEW ALL mode

STATUS	STATUS INPUTS			
1 to 4:	87L DIFF OP	87L DIFF OP G	87L DIFF BLOCKED	OFF
5 to 8:	PH DIST Z1 OP	GND DIST Z1 OP	PH DIST Z2 OP	GND DIST Z2 OP
9 to 12:	PH DIST Z3 OP	GND DIST Z3 OP	OFF	OFF
13 to 16:	OFF	OFF	OFF	OFF

CURRENT PAGE	Page 1	PAGE NAME	87L DIFF	LAYOUT	6x4		Preview	
PARAMETER	CONTENT	STATUS INDEX	TEXT	OFF TEXT	FONT	TEXT COLOR	BACK COLOR	ACTUAL
Cell(1, 1)	Text	Select One	DIFF OPERANDS		20			Configure
Cell(1, 2)	Status	1	87L DIFF OP	87LP NOT OP	16			Configure
Cell(1, 3)	Status	2	87L DIFF OP G	87LG NOT OP	16			Configure
Cell(1, 4)	Status	3	87L BLOCKED	87L NOT BLK	16			Configure
Cell(2, 1)	Text	Select One	DIFF CURRENT		20			Configure
Cell(2, 2)	Actual	Select One			16			Configure
Cell(2, 3)	Actual	Select One			16			Configure
Cell(2, 4)	Actual	Select One			16			Configure
Cell(3, 1)	Text	Select One	RESTRAINT CURR		20			Configure
Cell(3, 2)	Actual	Select One			16			Configure
Cell(3, 3)	Actual	Select One			16			Configure
Cell(3, 4)	Actual	Select One			16			Configure
Cell(4, 1)	Text	Select One	LOCAL CURRENT		20			Configure
Cell(4, 2)	Actual	Select One			16			Configure
Cell(4, 3)	Actual	Select One			16			Configure
Cell(4, 4)	Actual	Select One			16			Configure
Cell(5, 1)	Text	Select One	REM CURRENT		20			Configure
Cell(5, 2)	Actual	Select One			16			Configure
Cell(5, 3)	Actual	Select One			16			Configure
Cell(5, 4)	Actual	Select One			16			Configure
Cell(6, 1)	Text	Select One	GND DIFF		20			Configure
Cell(6, 2)	Actual	Select One			16			Configure
Cell(6, 3)	Text	Select One	GND RESTRAINT		20			Configure
Cell(6, 4)	Actual	Select One			16			Configure

Figure 5-10: Preview for graphical front panel

//Metering/87L DIFF

DIFF OPERANDS	87L DIFF OP	87L DIFF OP G	87L BLOCKED
DIFF CURRENT	000000.000 A	000000.000 A	000000.000 A
RESTRAINT CURR	000000.000 A	000000.000	000000.000 A
LOCAL CURRENT	000000.000 A	000000.000 A	000000.000 A
REM CURRENT	000000.000 A	000000.000 A	000000.000 A
GND DIFF	000000.000 A	GND RESTRAINT	000000.000 A

Page 1 : 87L DIFF Rows: 6 Columns: 4

To avoid conflict with XML programming, do not enter the following characters on the Annunciator and Metering editor panels: " (quotation mark), ' (apostrophe), < (less than), > (greater than), & (ampersand). When used, the text following the character does not display or the Annunciator and Metering panels do not display on the graphical front panel.

STATUS INPUTS 1 to 16

Range: OFF, ON, any FlexLogic operand
Default: OFF

This setting identifies the potential inputs for use in the STATUS INDEX fields, for display of the status of FlexLogic operands.

A maximum of eight Status Inputs can be used per metering page, and 16 in all metering pages.

Select the metering input from the drop-down list. The options reflect the FlexLogic operands applicable to the N60. They are inputs for all five metering pages, not just the current page.

CURRENT PAGE

Range: Page 1...Page 5

Default: Page 1

Select the metering page to configure from the drop-down list. There are five pages possible, viewable with the Tab pushbuttons on the graphical front panel.

PAGE NAME

Range: Page 1...Page 5

Default: Page 1

Up to 20 characters can be input here as the name of each metering page. The name displays for the Tab pushbutton on the graphical front panel.

LAYOUT

Range: 3x4, 4x6, 6x8, 6x4, 8x6, 12x8, 12x4, 16x6, 18x8

Default: 6x4

This setting determines how many rows and columns display on the graphical front panel with the metering information. The configurable rows in the settings window change dynamically based on this setting.

CONTENT

Range: Actual, Status, Text

Default: Text

Select the type of content to display.

- Actual — an actual value/data. The **Configure** button becomes active for the actual value to be selected.
- Status — one of the operands selected from the STATUS INPUTS fields. Select it in the **STATUS INDEX** field.
- Text — indicates that text is to display instead of a metered value

STATUS INDEX

Range: 1...16

Default:

This field becomes active when the **CONTENT** field is set to Status. It selects the input from the STATUS INPUTS to display the on/off status of the selected operand.

A maximum of eight Status Inputs can be used per metering page, and 16 in all metering pages.

TEXT

Range: up to 20 alphanumeric characters

Default:

Enter the text to display on the graphical front panel. This field is active when the **CONTENT** field is set to Text or Status. When Status is selected, the text displays when the status input is in the "on" state.

OFF TEXT

Range: up to 20 alphanumeric characters

Default:

Enter the text to display on the graphical front panel when the element being monitored is in an off/closed state. This field is active when the **CONTENT** field is set to Status. The text displays when the status input is in the "off" state.

FONT

Range: 16, 18, 20

Default: 16

Set the font size to display on the graphical front panel.

TEXT COLOR

Range: 24-bit color selector
Default: Black

Set the text color to display in the specified cell.

BACK COLOR

Range: 24-bit color selector
Default: Grey

Set the background color to display in the specified cell.

ACTUAL (Configure)

Range: Configure
Default: Configure

The **Configure** button becomes active when the **CONTENT** field is set to "Actual." The window specifies the metering data to display.

Figure 5-11: Metering value properties window

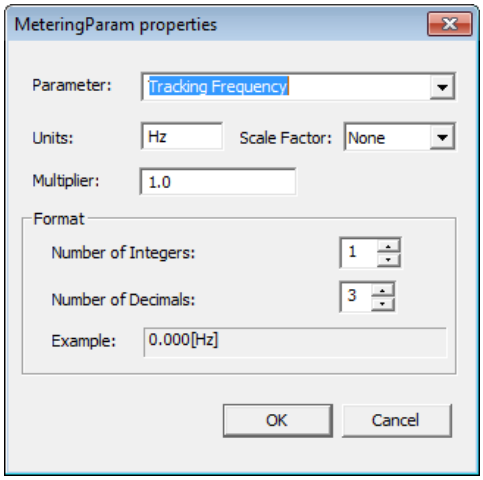

Parameter

Range: any FlexAnalog parameter
Default:

This setting selects a FlexAnalog parameter that specifies the metered value to display in the metering window. A FlexAnalog is an analog parameter.

Units

Range: up to eight alphanumeric characters
Default:

This setting specifies the units of measurement for the metered value and is populated based on the Parameter selected. The field can be left blank when units of measure do not apply.

Scale Factor

Range: G Giga, M Mega, k Kilo, None
Default: None

This setting allows the user to specify the scaling factor for the metering units value. Options depend on the Parameter.

Multiplier

Range: -1000000 to 1000000
Default: 1.0

This setting allows the user to specify a multiplier for the metering parameter value. The multiplier must be in compliance with the 32-bit floating-point format per IEEE 754, otherwise, the input value is represented as per the IEEE standard. For example, 1234.56789 is represented as 1234.567871094, and 9876.54321 as 9876.54296875.

Number of Integers

Range: 1 to 12 in steps of 1

Default: 1

This setting specifies the number of integers in the displayed metered value. It can be used to provide for leading character spacing of the display value.

For example, setting the number to 2 displays 00.000[V] and setting it to 3 displays 000.000[V].

Number of Decimals

Range: 0 to 10 in steps of 1

Default: 3

This setting specifies the number of decimal places in the displayed metered value. For example, setting the number to 1 displays 0.0 and setting it to 2 displays 0.00.

5.3.3.4 Single-line diagram editor

The path is **Settings > Product Setup > Graphical Panel > Single Line Diagram Editor**. Use is explained in the Interfaces chapter.

5.3.3.5 Annunciator editor

The annunciator editor is used to create annunciator content for the graphical front panel, including alarms and actual values. Use is explained in the Interfaces chapter.

The path is **Settings > Product Setup > Graphical Panel > Annunciator Editor**.

To add an alarm, access the Annunciator Editor, configure the Layout and Page Name, configure the alarm or actual value, set the text and color, then save. On the graphical front panel, view the content by pressing the **Annunciator** Tab pushbutton at the bottom of the **Home** page. (Alarms do not display automatically.) Acknowledge the alarm by navigating to it with the arrow pushbuttons, then pressing the **ENTER** or **RESET** pushbutton.

The figure shows alarms for basic functions. The last annunciator page is named Device Alarms. Alarms are set for the device being offline, Ethernet cable issues, unauthorized access, battery failure, and high ambient temperature. They can reset themselves when conditions return to normal, except for unauthorized access and temperature monitoring, which require the alarms to be acknowledged. The self-test error functions, here for Ethernet and battery failures, also have been enabled under **Settings > Product Setup > User-Programmable Self Tests** (not shown). When the alarms are triggered, they display with a red background. An alarm is acknowledged by using the arrow keys on the graphical front panel then pressing the **ENTER** button.

Figure 5-12: Annunciator editor with preview shown

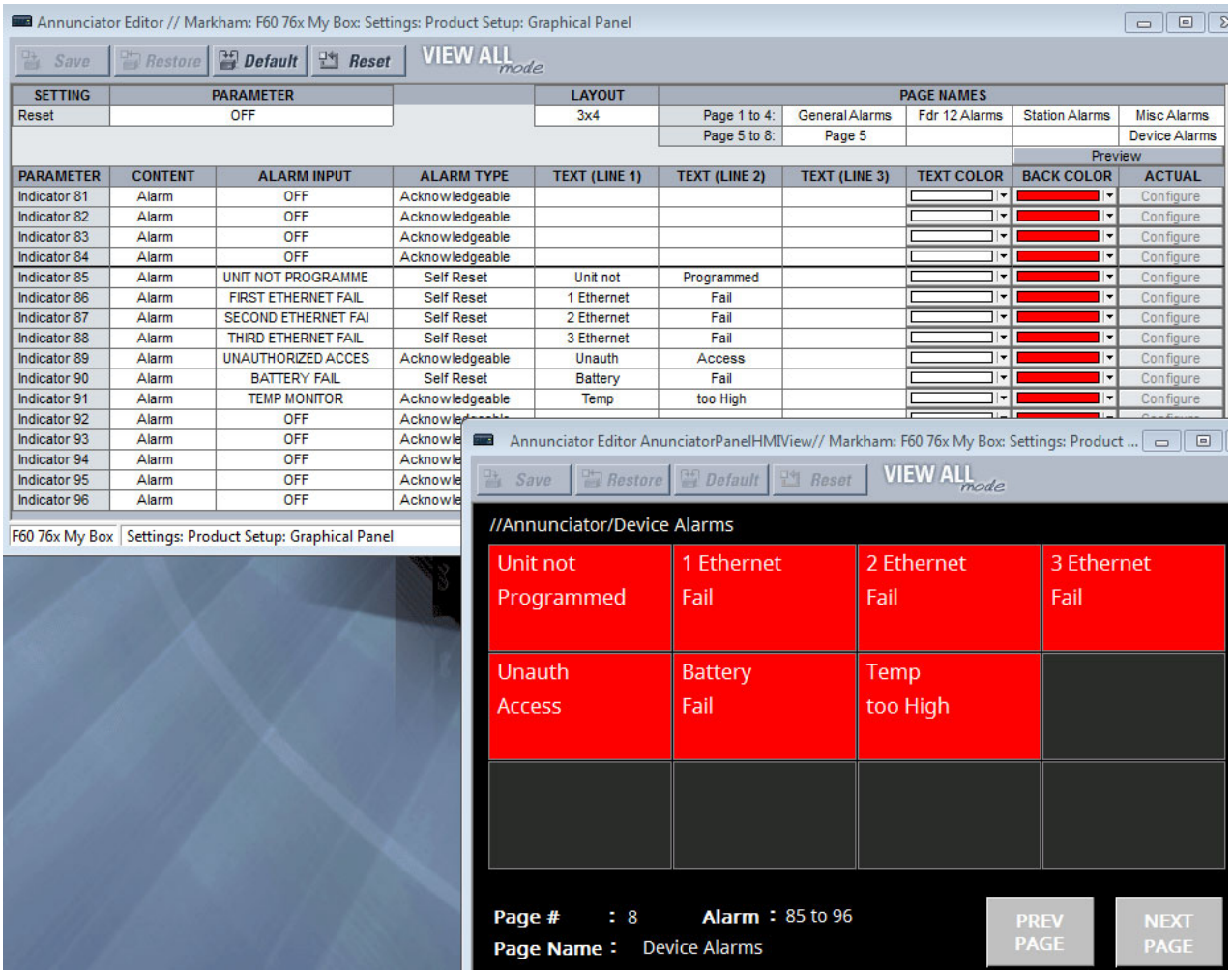

To avoid conflict with XML programming, do not enter the following characters on the Annunciator and Metering editor panels: " (quotation mark), ' (apostrophe), < (less than), > (greater than), & (ampersand). When used, the text following the character does not display or the Annunciator and Metering panels do not display on the graphical front panel.

Reset

Range: ON, OFF, any FlexLogic operand
Default: OFF

This setting selects a FlexLogic operand that when activated acknowledges/resets all annunciator windows in the graphical front panel. For example, to have the first user pushbutton resets all alarms, set this to PUSHBUTTON 1 ON and turn on the pushbutton under **Settings > Product Setup > User-Programmable Pushbuttons**. This setting is the same as the one defined in **Settings > Inputs/Outputs > Resetting > Reset Annunciator**. See the Resetting section later in this chapter.

LAYOUT

Range: 3x4, 4x6, 6x8
Default: 3x4

Selects the number of rows and columns to display on the annunciator pages. For example, 3x4 means 12 windows display per page over eight pages. Up to 96 entries are possible.

To view the layout, click the **Preview** button.

PAGE NAMES

Range: up to 20 alphanumeric characters
Default: Page 1...Page 8

Up to 20 characters can be input as the name of each annunciator page. The number of pages depends on the Layout. The name displays for the Tab pushbutton on the graphical front panel.

PARAMETER

Range: Indicator 1...Indicator 96
Default: Indicator 1...Indicator 96

Read-only field. Up to 96 windows are possible.

CONTENT

Range: Actual, Alarm, Mixed
Default: Alarm

Select if the cell is to be an alarm, an actual value, or a combination thereof, for example consists of a single metered value (set to “Actual”), contains a single alarm indication (set to “Alarm”), or contains both a metered value and an alarm indication (set to “Mixed”).

ALARM INPUT

Range: OFF, ON, any FlexLogic operand
Default: OFF

Select a trigger for the alarm, or the input signal connected to the alarm. For example, when set to "FIRST ETHERNET FAIL" and the Ethernet cable connected to port 1 is removed, the alarm is triggered. (Note that when the Ethernet cable is inserted into an SFP connector and the SFP connector is removed, the alarm is not triggered.) The field is read-only for an actual value.

The selectable options are the FlexLogic operands specific to the product.

ALARM TYPE

Range: Acknowledgeable, Self Reset, Latched
Default: Acknowledgeable

Set the alarm type. The field is read-only for an actual value.

Acknowledgeable — Follow the state transitions, as outlined in the Annunciator section of the Interfaces chapter. The alarm blinks until acknowledged, then remains on until the condition clears.

Self Reset — Track the state of the input operand. The alarm turns on when the trigger activates and off when the trigger clears.

Latched — Alarm is on until acknowledged/reset individually or until the **RESET** button is pressed.

To acknowledge/reset/unlatch an alarm, use the arrow buttons on the graphical front panel and press the **ENTER** button.

TEXT (LINE 1 to 3)

Range: up to 10 alphanumeric characters
Default:

The text that displays in the annunciator cell. Three lines can be displayed. Note that a specified metering value replaces the text for the selected line. This means that a line can display text or be set to show an actual metered value. If the text does not display it is because an actual metered value is over-riding it; change the line for the text or for the actual value.

TEXT COLOR

Range: 24-bit color selector
Default: White

The color to display for the three text or actual value lines specified.

BACK COLOR

Range: 24-bit color selector
Default: Red

The background color to display for any triggered cell, for example when an alarm is triggered.

ACTUAL (Configure)

Range: Configure

Default: Configure

The **Configure** button becomes active when the **CONTENT** field is set to "Actual" or "Mixed." The window specifies the metering data to display.

Parameter

Range: any FlexAnalog parameter

Default:

This setting selects a FlexAnalog parameter that specifies the metered value to display in the annunciator alarm.

Units

Range: up to eight alphanumeric characters

Default:

This setting specifies the units of measurement for the metered value and is populated based on the Parameter selected. The field can be left blank when units of measure do not apply.

Scale Factor

Range: G Giga, M Mega, k Kilo, None

Default: None

This setting allows the user to specify the scaling factor for the metering units value. Options depend on the Parameter.

Multiplier

Range: -1000000 to 1000000

Default: 1.0

This setting allows the user to specify a multiplier for the metering parameter value. The multiplier must be in compliance with the 32-bit floating-point format per IEEE 754, otherwise, the input value is represented as per the IEEE standard. For example, 1234.56789 is represented as 1234.567871094, and 9876.54321 as 9876.54296875.

Number of Integers

Range: 1 to 12 in steps of 1

Default: 1

This setting specifies the number of integers in the displayed analog value. It can be used to provide for leading character spacing of the display value.

For example, setting the number to 2 displays 00.000[V] and setting it to 3 displays 000.000[V].

Number of Decimals

Range: 0 to 10 in steps of 1

Default: 3

This setting specifies the number of decimal places in the displayed analog value. For example, setting the number to 1 displays 0.0 and setting it to 2 displays 0.00.

Display in Line

Range: 1, 2, 3

Default: 1

This setting specifies the line in the annunciator alarm window to display the metered value. The actual value replaces the text for the selected line. For example, 2 means the value displays in line 2 of the text; any text configured to display in that line does not display.

5.3.3.6 Configurable navigation

The path is **Settings > Product Setup > Graphical Panel > Configurable Navigation**.

This feature allows FlexLogic operands to trigger page display on the graphical front panel. It consists of 64 setting pairs, each with a condition and an activation page. The condition selects any FlexLogic operand. The activation page selects any page available for the graphical front panel. The page opens whenever the selected operand transitions from Off to On. The page remains open until rolling mode initiates, another trigger initiates from Configurable Navigation, or the **Home** button is pressed.

Avoid selecting condition operands that are likely to operate simultaneously but activate different pages, as only one page can be opened at a time. For example, do not select a single-line diagram page for breaker status open and select an annunciator page for a trip alarm.

In the example shown, failure of any of the three Ethernet ports triggers the Product Information page to display. With unauthorized access (such as wrong password), IRIG-B clock failure, or breaker trouble, the Event Records display. When a breaker opens, a single-line diagram displays. For the Ethernet and IRIG-B failure operation to work, these functions also have been enabled under **Settings > Product Setup > User-Programmable Self Tests**.

Figure 5-13: Configurable navigation editor

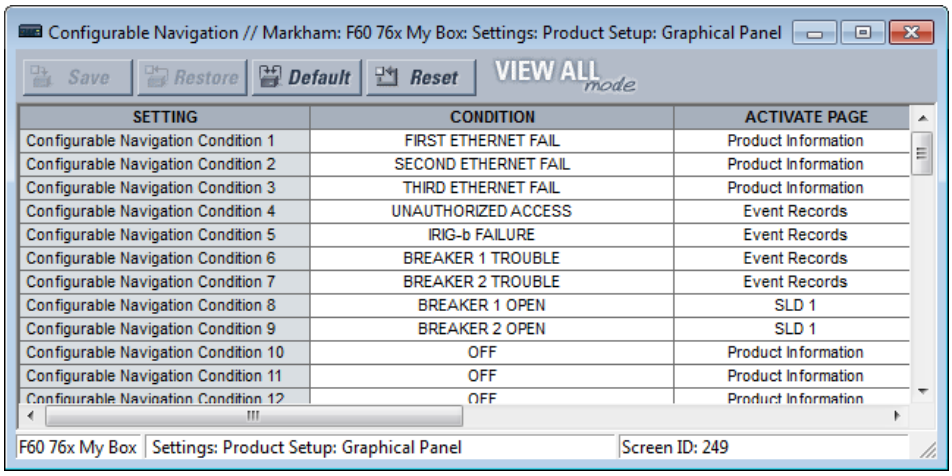

SETTING	CONDITION	ACTIVATE PAGE
Configurable Navigation Condition 1	FIRST ETHERNET FAIL	Product Information
Configurable Navigation Condition 2	SECOND ETHERNET FAIL	Product Information
Configurable Navigation Condition 3	THIRD ETHERNET FAIL	Product Information
Configurable Navigation Condition 4	UNAUTHORIZED ACCESS	Event Records
Configurable Navigation Condition 5	IRIG-b FAILURE	Event Records
Configurable Navigation Condition 6	BREAKER 1 TROUBLE	Event Records
Configurable Navigation Condition 7	BREAKER 2 TROUBLE	Event Records
Configurable Navigation Condition 8	BREAKER 1 OPEN	SLD 1
Configurable Navigation Condition 9	BREAKER 2 OPEN	SLD 1
Configurable Navigation Condition 10	OFF	Product Information
Configurable Navigation Condition 11	OFF	Product Information
Configurable Navigation Condition 12	OFF	Product Information

To use the feature, select a **CONDITION**, select an **ACTIVATE PAGE**, then save.

CONDITION

Range: OFF, ON, any FlexLogic operand

Default: OFF

Select the FlexLogic operand for the trigger. When it transitions from Off to On, it opens the page specified by the **ACTIVATE PAGE** setting. The FlexLogic operands selectable depend on product. Select it from the drop-down list. Or click or select the field and start typing to auto-fill. For example, typing F displays FIRST ETHERNET FAIL, while typing BR displays the first breaker option.

ACTIVATE PAGE

Range: Product Information, SLD 1...5, Annunciator, Annunciator 1...8, Actual Values Phasors 1...6, Tabular 1...5, Event Records, Targets

Default: Product Information

This setting specifies the page to display on the graphical front panel when the FlexLogic operand selected by its **CONDITON** setting transitions from Off to On.

The "Annunciator" option without a page number specifies the first annunciator page in the following sequence:

- The first annunciator page that contains an annunciator window that is in alarm (fast flash)
- The first annunciator page that contains an annunciator window that is in ringback. Ringback is a "return alert." Visual and audible signals are given when conditions return to normal, then the sequence returns to normal by pushing the **RESET** button.
- The first annunciator page that contains an annunciator window that is in abnormal state
- Annunciator page 1

The Tabular option displays a configured actual values/metering page.

The Targets option displays error messages, such as wrong transceiver, similar to event record entries.

5.3.4 Clear relay records

SETTINGS ⇨ PRODUCT SETUP ⇨⇩ CLEAR RELAY RECORDS

■ CLEAR RELAY ■ RECORDS	⇔	CLEAR USER REPORTS: Off	Range: FlexLogic operand
	⇩	CLEAR EVENT RECORDS: Off	Range: FlexLogic operand
	⇩	CLEAR OSCILLOGRAPHY: Off	Range: FlexLogic operand
	⇩	CLEAR DATA LOGGER: Off	Range: FlexLogic operand
	⇩	CLEAR DEMAND: Off	Range: FlexLogic operand
	⇩	CLEAR ENERGY: Off	Range: FlexLogic operand
	⇩	RESET UNAUTH ACCESS: Off	Range: FlexLogic operand
	⇧	CLEAR DIR I/O STATS: Off	Range: FlexLogic operand Visible only for units with Direct I/O module

RESET UNAUTH ACCESS — Resets the access restriction counter.

Selected records can be cleared from user-programmable conditions with FlexLogic operands. Assigning user-programmable pushbuttons to clear specific records is a typical application for these commands. Since the N60 responds to rising edges of the configured FlexLogic operands, they must be asserted for at least 50 ms to take effect.

Clearing records with user-programmable operands is not protected by the command password. However, user-programmable pushbuttons are protected by the command password. Thus, if they are used to clear records, the user-programmable pushbuttons can provide extra security if required.

For example, to assign user-programmable pushbutton 1 to clear demand records, apply the following settings.

1. Assign the clear demand function to pushbutton 1 by making the following change in the **SETTINGS ⇨ PRODUCT SETUP ⇨⇩ CLEAR RELAY RECORDS** menu:

   CLEAR DEMAND: "PUSHBUTTON 1 ON"

2. Set the properties for user-programmable pushbutton 1 by making the following changes in the **SETTINGS ⇨ PRODUCT SETUP ⇨⇩ USER-PROGRAMMABLE PUSHBUTTONS ⇨ USER PUSHBUTTON 1** menu:

   PUSHBUTTON 1 FUNCTION: "Self-reset"
   PUSHBTN 1 DROP-OUT TIME: "0.20 s"

5.3.5 Communications

5.3.5.1 Menu

SETTINGS ⇨ PRODUCT SETUP ⇨⇩ COMMUNICATIONS

■ COMMUNICATIONS ■	⇔	■ SERIAL PORTS ■	See below
	⇩	■ NETWORK ■	See page 5-43
	⇩	■ IPv4 ROUTE TABLE ■	See page 5-48

⇕	■ MODBUS PROTOCOL ■	See page 5-51
⇕	■ PROTOCOL ■	See page 5-52
⇕	■ DNP PROTOCOL ■	See page 5-54
⇕	■ DNP / IEC104 ■ POINT LISTS	See page 5-57
⇕	■ IEC 61850 PROTOCOL ■	Access in EnerVista See page 5-58
⇕	■ LEGACY FIXED GOOSE ■	See page 5-109
⇕	■ WEB SERVER ■ HTTP PROTOCOL	See page 5-115
⇕	■ TFTP PROTOCOL ■	See page 5-115
⇕	■ IEC 60870-5-104 ■ PROTOCOL	See page 5-116
⇕	■ IEC103 ■ PROTOCOL	See page 5-117
⇧	■ USB 2.0 PORT ■	See page 5-122

5

5.3.5.2 Serial ports

SETTINGS ⇨ PRODUCT SETUP ⇨⇩ COMMUNICATIONS ⇨ SERIAL PORTS

■ SERIAL PORTS ■	⇔	RS232 PORT FUNCTION: Enabled	Range: Disabled, Enabled
	⇕	RS232 BAUD RATE: 115200 ms	Range: 19200, 115200
	⇕	RS485 COM2 PORT FUNCTION: Enabled	Range: Disabled, Enabled
	⇕	RS485 COM2 BAUD RATE: 19200	Range: 300, 1200, 2400, 4800, 9600, 14400, 19200, 28800, 33600, 38400, 57600, 115200 bit/s
	⇕	RS485 COM2 PARITY: Even	Range: None, Odd, Even
	⇧	RS485 COM2 RESPONSE MIN TIME: 0 ms	Range: 0 to 1000 ms in steps of 10

RS232 PORT FUNCTION — This setting enables and disables the RS232 serial port on the front panel. When the port function is "Enabled", a standard RS232 serial cable allows a computer running the EnerVista UR Setup software to retrieve, display, and write settings either individually or collectively, to display status and actual values, to initiate controls, and to retrieve and display event records, oscillography records, data logger records, and disturbance records. This setting is applicable to both enhanced and basic front panels.

RS232 BAUD RATE, **RS485 COM2 BAUD RATE**, and **PARITY** — The N60 is equipped with two independent serial communication ports. The front panel RS232 port (USB port with graphical front panel) is intended for local use. The rear COM2 port is RS485 and has settings for baud rate and parity. It is important that these parameters agree with the settings used on the computer or other equipment that is connected to these ports. Any of these ports can be connected to a computer running the EnerVista software, for example to download and upload setting files, view measured parameters, and upgrade the relay firmware. A maximum of 32 relays can be daisy-chained and connected to a DCS, PLC, or computer using the RS485 ports. If IEC 60870-103 is chosen as the protocol, valid baud rates are 9600 and 19200 bit/s, and valid parity is Even.

RS485 PORT FUNCTION — This setting enables and disables the RS485 COM2 serial port on the rear panel. When the port function is "Disabled", SCADA (Modbus or IEC103 communications) and other comms on the rear RS485 port are not permitted.

RS485 COM2 RESPONSE MIN TIME — This setting specifies the minimum time before the rear RS485 port transmits after receiving data from a host. This feature allows operation with hosts that hold the RS485 transmitter active for some time after each transmission.

5.3.5.3 Ethernet network topology

The N60 has three Ethernet ports. Each Ethernet port must belong to a different network or subnetwork. Configure the IP address and subnet to ensure that each port meets this requirement. Two subnets are different when the bitwise AND operation performed between their respective IP address and mask produces a different result. Communication becomes unpredictable when more than one port is configured to the same subnet.

Example 1

IP1/Mask1: 10.1.1.2/255.255.255.0 (where LAN 1 is 10.1.1.x/255.255.255.0)

IP2/Mask2: 10.2.1.2/255.255.255.0 (where LAN2 is 10.2.1.x/255.255.255.0)

IP3/Mask3: 10.3.1.2/255.255.255.0 (where LAN3 is 10.3.1.x/255.255.255.0)

Example 2

IP1/Mask1: 10.1.1.2/255.0.0.0 (where LAN1 is 10.x.x.x/255.0.0.0)

IP2/Mask2: 11.1.1.2/255.0.0.0 (where LAN2 is 11.x.x.x/255.0.0.0)

IP3/Mask3: 12.1.1.2/255.0.0.0 (where LAN3 is 12.x.x.x/255.0.0.0)

Example 3 — Incorrect

IP1/Mask1: 10.1.1.2/255.0.0.0

IP2/Mask2: 10.2.1.2/255.0.0.0

IP3/Mask3: 10.3.1.2/255.0.0.0

This example is incorrect because the mask of 255.0.0.0 used for the three IP addresses makes them belong to the same network of 10.x.x.x.

Single LAN, no redundancy

The topology shown in the following figure allows communications to SCADA, local configuration/monitoring through EnerVista, and access to the public network shared on the same LAN. No redundancy is provided.

Figure 5-14: Network configuration for single LAN

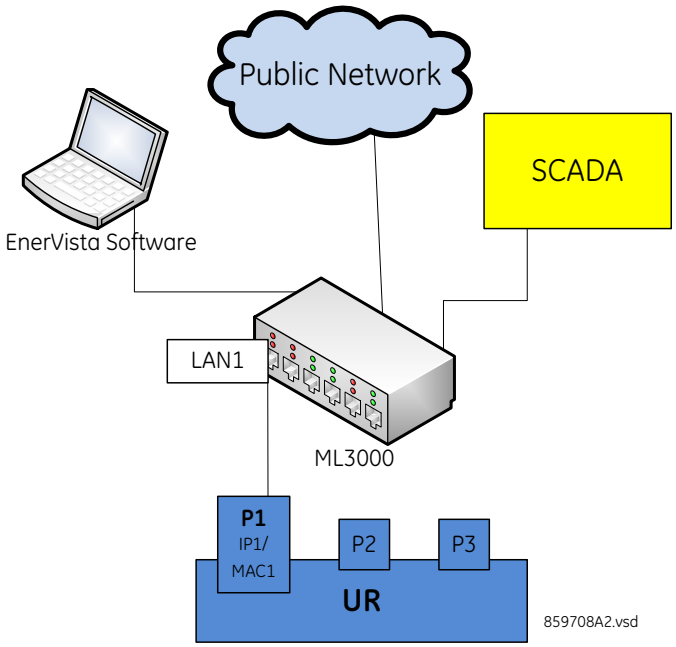

5

Multiple LANS, with redundancy

The following topology provides local configuration/monitoring through EnerVista software and access to the public network shared on LAN1, to which port 1 (P1) is connected. There is no redundancy provided on LAN1. Communications to SCADA is provided through LAN2. P2 and P3 are connected to LAN2, where P2 is the primary channel and P3 is the redundant channel. In this configuration, P3 uses the IP and MAC addresses of P2.

Figure 5-15: Multiple LANs, with redundancy

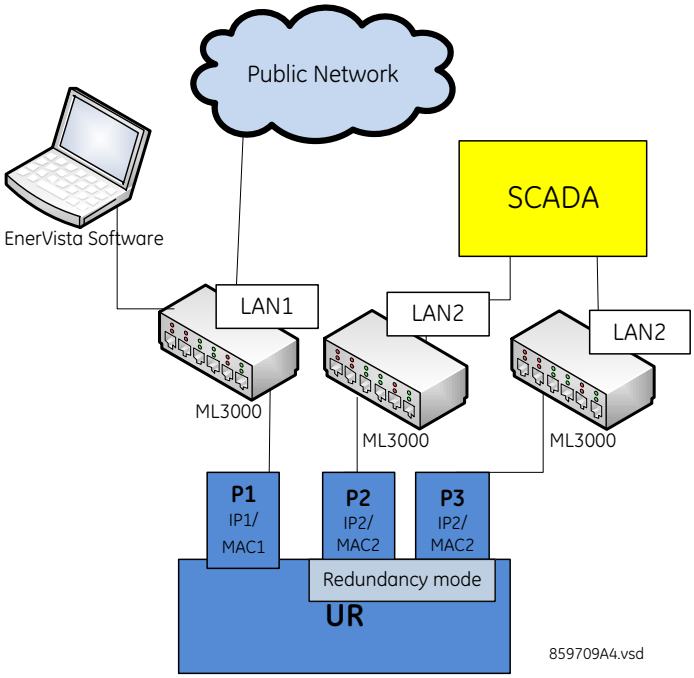

Multiple LANS, no redundancy

The following topology provides local configuration/monitoring through EnerVista software on LAN1, to which port 1 (P1) is connected, access to the public network on LAN2, to which port 2 (P2) is connected, and communications with SCADA on LAN3, to which port 3 (P3) is connected. There is no redundancy.

Figure 5-16: Multiple LANS, no redundancy

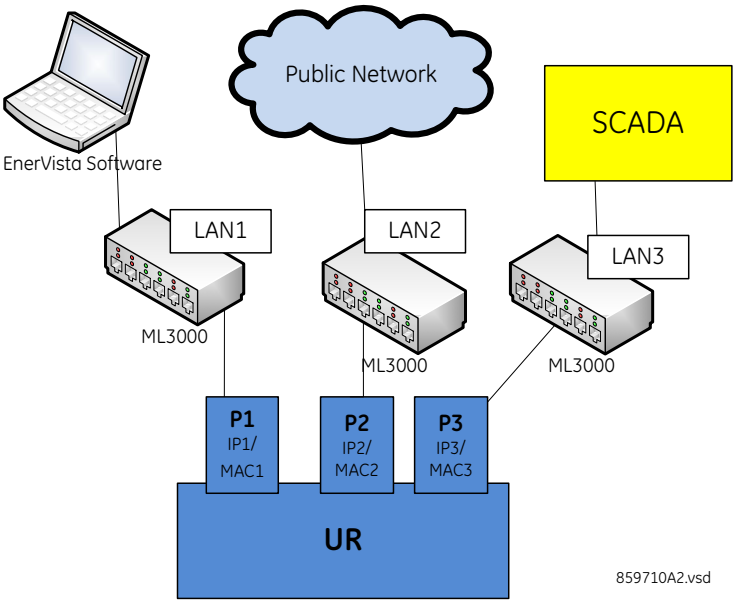

5.3.5.4 Network

As outlined in the previous section, when using more than one Ethernet port, configure each to belong to a different network or subnet using the IP addresses and mask. Configure the network IP and subnet settings before configuring the routing settings.

Follow the IP and subnet mask rules outlined in the Set IP Address in UR section of the Installation chapter.

To obtain a list of all port numbers used, for example for audit purposes, contact GE technical support with substantiating information, such as the serial number and order code of your device.

SETTINGS ⇨ PRODUCT SETUP ⇨⇩ COMMUNICATIONS ⇨⇩ NETWORK ⇨ NETWORK PORT 1(3)

■ **NETWORK PORT 1** ■	⇔	**PRT1 IP ADDRESS:** **127.0.0.1**	Range: standard IPV4 address format
	⇩	**PRT1 SUBNET IP MASK:** **255.0.0.0**	Range: standard IPV4 address format
	⇧	**PRT1 FUNCTION:** **Enabled**	Range: Enabled, Disabled

■ **NETWORK PORT 2** ■	⇔	**PRT2 IP ADDRESS:** **127.0.0.1**	Range: standard IPV4 address format
	⇩	**PRT2 SUBNET IP MASK:** **255.0.0.0**	Range: standard IPV4 address format
	⇩	**PRT2 REDUNDANCY:** **None**	Range: None, Failover, PRP Range if no PRP license: None, Failover
	⇩	**PRP MCST ADDR:** **01154E000100**	Range: 01-15-4E-00-01-00 to 01-15-4E-00-01-FF

	⇧	**PRT2 FUNCTION: Enabled**	Range: Enabled, Disabled
■ NETWORK PORT 3 ■	⇔	**PRT3 IP ADDRESS: 127.0.0.1**	Range: standard IPV4 address format
	⇧	**PRT3 SUBNET IP MASK: 255.0.0.0**	Range: standard IPV4 address format
	⇧	**PRT3 FUNCTION: Enabled**	Range: Enabled, Disabled

The IP addresses are used with the DNP, Modbus/TCP, IEC 61580, IEC 60870-5-104, TFTP, HTTP, and PRP protocols. PRP is explained in its own section later.

Use the front panel to change these settings. When online, the EnerVista software can be used to enable/disable each port only. In the Offline Window area, all settings can be changed except port 2 redundancy (depending on firmware version).

When using GOOSE, in failover or PRP mode, port 3 configuration in the CID file is ignored. The Port 3 ConnectedAP elements has no meaning, as ports 2 and 3 use the port 2 MAC address, IP address, and mask.

PRT1 (2 or 3) IP ADDRESS — This setting sets the port's IPv4 address in standard IPV4 format. This setting is valid on port 3 if port 2 **REDUNDANCY** is set to None.

PRT1 (2 or 3) SUBNET MASK — This setting sets the port's IPv4 subnet mask in standard IPV4 format. This setting is valid on port 3 if port 2 **REDUNDANCY** is set to None.

PRT1 (2 or 3) FUNCTION — This setting enable/disables network communication on the respective port. When the port function is Disabled, the network traffic on this port is disabled. The PRT2 redundancy setting has no effect on this functionality. The change takes effect upon relay restart.

If you disable a port here that is used to communicate between the relay and the software, this can take down all communication between the two. For example, an Ethernet connection set to the IP address of the relay can be disabled and cannot be reached, even when pinging. The port needs to be re-enabled, IP and any gateway addresses need to be checked, and the relay needs to be set to Programmed.

PRT2 REDUNDANCY — Determines if ports 2 and 3 operate in redundant or independent mode. If the software options in the order code include PRP, the available options are None, Failover, and PRP. If the software options in the order code do not include PRP, the available options are None and Failover. In non-redundant mode (**REDUNDANCY** set to None), ports 2 and 3 operate independently with their own MAC, IP, and mask addresses. If **REDUNDANCY** is set to Failover, the operation of ports 2 and 3 is as follows:

- Ports 2 and 3 use the port 2 MAC address, IP address, and mask
- The configuration fields for IP address and mask on port 3 are hidden
- Port 3 is in standby mode and does not actively communicate on the Ethernet network but monitors its link to the Ethernet switch. If port 2 detects a problem with the link, communications is switched to Port 3. Port 3 is, in effect, acting as a redundant or backup link to the network for port 2. Once port 2 detects that the link between itself and the switch is good and that communication is healthy for five minutes, then switching back to port 2 is performed. The delay in switching back ensures that rebooted switching devices connected to the N60, which signal their ports as active prior to being completely functional, have time to completely initialize themselves and become active. Once port 2 is active again, port 3 returns to standby mode.

If **REDUNDANCY** is set to PRP, the operation of ports 2 and 3 is as follows:

- Ports 2 and 3 use the port 2 MAC address, IP address, and mask
- The configuration fields for IP address and mask on port 3 are overwritten with those from port 2. This is visible on the front panel but not displayed in the EnerVista software.
- Port 2 **MCST ADDRESS** field is visible
- The port 2 PTP function still uses only port 2 and the port 3 PTP function still uses only port 3. The relay still synchronizes to whichever port has the best master. When ports 2 and 3 see the same master, as is typically the case for PRP networks, the port with the better connectivity is used.

Behavior for GOOSE messages is as follows:

- If **REDUNDANCY** is set to Failover or PRP, In order to transmit a GOOSE message on port 2, the CID file must be configured to have the corresponding GSE element in both ConnectedAPs S2 and S3. In the EnerVista software, the **TxGOOSE CPU PORT ASSIGNMENT** needs to be "Ports-1,2,3" to transmit GOOSE on both ports 1 and 2, or "Ports-2,3" to have GOOSE only on port 2, with failover/ PRP.
- If **REDUNDANCY** is set to PRP, the port 2 configured GOOSE message is simultaneously transmitted on ports 2 and 3
- If **REDUNDANCY** is set to failover and the port 2 link fails, then only the port 2 configured GOOSE message is transmitted on port 3

NOTE

The two ports must be connected to completely independent LANs with no single point of failure, such as common power supplies that feed switches on both LANs.

When **REDUNDANCY** is set to PRP or failover and the network path with resolved default gateway is broken, then the ARP table needs approximately five seconds to rebuild. The layer 2 protocols (GOOSE and PTP) are not affected. However, the TCP/IP or UDP protocols (MMS connections, DNP3.0, and so on) can require reconnection if their active connection does not ride through re-transmission frames.

For any changes to this setting to take effect, restart the unit.

PRT2 PRP MCST ADDR — This setting allows the user to change the multicast address used by the PRP supervision frames. This setting is available if **REDUNDANCY** is set to PRP. All devices in the same PRP network need to have the same multicast address. Choose an address that does not conflict with another multicast protocol.

5.3.5.5 Far-End Fault Indication (FEFI)

Since 100BASE-FX does not support Auto-Negotiation, a Far-End Fault Indication (FEFI) feature is included since UR 7 that allows for detection of link failures.

The purpose of the Far-End Fault feature is to allow the stations on both ends of a pair of fibers to be informed when there is a problem with one of the fibers. Without the Far-End Fault feature, it is impossible for a fiber interface to detect a problem that affects only its transmit fiber.

When the Far-End Fault feature is supported, a loss of receive signal (link) causes the transmitter to generate a Far-End Fault pattern in order to inform the device at the far end of the fiber pair that a fault has occurred.

When the local receiver again detects a signal, the local transmitter automatically returns to normal operation.

If a Far-End Fault pattern is received by a fiber interface that supports the Far-End Fault feature and it is enabled, it reacts by dropping the link as if there were no signal at all.

If the receiving interface does not support the Far-End Fault feature or has it disabled, an incoming Far-End Fault pattern is ignored.

It is strongly recommended to have switches used for substation automation that support the Far-End Fault feature, especially when UR 7 redundancy Failover is selected for redundancy.

5.3.5.6 Parallel Redundancy Protocol (PRP)

SOFTWARE OPTION

The N60 is provided with optional PRP capability, specified as a software option at the time of ordering.

The Parallel Redundancy Protocol (PRP) defines a redundancy protocol for high availability in substation automation networks. It applies to networks based on Ethernet technology (ISO/IEC 8802-3) and is based on the second edition (July 2012) of IEC 62439-3, clause 4.

PRP is designed to provide seamless recovery in case of a single failure in the network, by using a combination of LAN duplication and frame duplication. Identical frames are sent on two completely independent networks that connect source and destination. Under normal circumstances both frames reach the destination and one of them is sent up the OSI stack to the destination application, while the second one is discarded. If an error occurs in one of the networks and traffic is

prevented from flowing on that path, connectivity is provided through the other network to ensure continuous communication. Take care when designing the two LANs, so that no single point of failure (such as a common power supply) is encountered, as such scenarios can bring down both LANs simultaneously.

Figure 5-17: Example of parallel redundant network

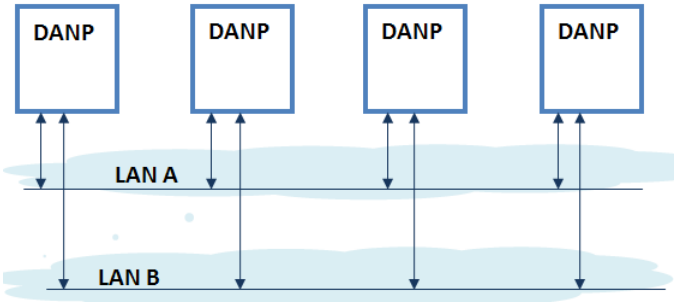

PRP uses specialized nodes called doubly attached nodes (DANPs) for handling the duplicated frames. DANP devices have an additional module, called a Link Redundancy Entity (LRE). LRE is responsible for duplicating frames and adding the specific PRP trailer when sending the frames out on the LAN, as well as making decisions on received frames as to which one is sent up the OSI stack to the application layer and which one is discarded. LRE is responsible for making PRP transparent to the higher layers of the stack.

In addition, there is a second type of specialized device used in PRP networks, called RedBox, with the role of connecting Single Attached Nodes (SANs) to a redundant network.

UR relays implement the DANP functionality. The RedBox functionality is not implemented.

The original standard IEC 62439-3 (2010) was amended to align PRP with the High-availability Seamless Redundancy (HSR) protocol. To achieve this, the original PRP was modified at the cost of losing compatibility with the PRP 2010 version. The revised standard IEC 62439-3 (2012) is commonly referred to as PRP-1, while the original standard is PRP-0. The UR relays support PRP-1.

The relay implements PRP on two of its Ethernet ports, specifically Ports 2 and 3 of the CPU module. Use the previous section (network port configuration) to configure PRP.

PRP is purchased as a separate option. If purchased (valid order code), PRP can be enabled in configuration through a setting available on the network configuration menu, REDUNDANCY, which already has the capability of enabling failover redundancy. The options on this setting must be changed to accommodate two types of redundancy: failover and PRP. When REDUNDANCY is set to either failover or PRP, the ports dedicated for PRP (Ports 2 and 3) operate in redundant mode. In this mode, Port 3 uses the MAC, IP address, and mask of Port 2.

5.3.5.7 IPv4 route table

SETTINGS ⇨ PRODUCT SETUP ⇨⇩ COMMUNICATIONS ⇨⇩ IPv4 ROUTE TABLE 1(6)

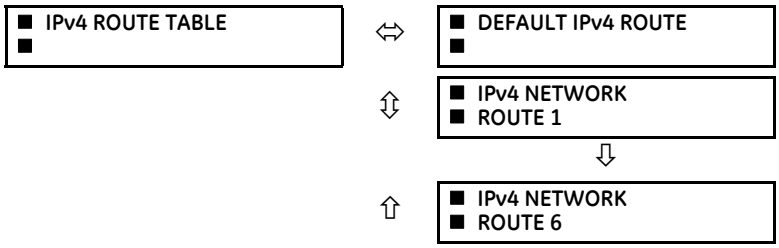

A default route and up to six static routes can be configured.

The default route is used as the last choice when no other route towards a given destination is found.

Range: standard IPV4 unicast address format

■ IPv4 NETWORK ■ ROUTE 1	⇔	RT1 DESTINATION: 127.0.0.1	Range: standard IPV4 address format
	⇕	RT1 NET MASK: 255.0.0.0	Range: standard IPV4 subnet mask format
	⇧	RT1 GATEWAY: 127.0.0.1	Range: standard IPV4 unicast address format

Configure the network IP and subnet settings before configuring the routing settings.

Add and delete static routes

Host routes are not supported at present.

The routing table configuration is available on the serial port and front panel. This is a deliberate decision, to avoid loss of connectivity when remotely configuring the N60.

By default, the value of the destination field is 127.0.0.1 for all static routes (1 to 6). This is equivalent to saying that the static routes are not configured. When the destination address is 127.0.0.1, the mask and gateway also must be kept on default values.

By default, the value of the route gateway address is 127.0.0.1. This means that the default route is not configured.

To add a route:

1. Use any of the static network route entries numbered 1 to 6 to configure a static network route. Once a route destination is configured for any of the entries 1 to 6, that entry becomes a static route and it must meet all the rules listed in the next section, General Conditions to be Satisfied by Static Routes.
2. To configure the default route, enter a default gateway address. Once a default gateway address is configured, it must be validated against condition 2 of the General Conditions to be Satisfied by Static Routes, where the route gateway must be on a connected network.

To delete a route:

1. Replace the route destination with the default loopback address of 127.0.0.1. When deleting a route, the mask and gateway also must be brought back to default values.
2. Delete the default route by replacing the default gateway with the default value of 127.0.0.1.

General conditions to be satisfied by static routes

The following rules are validated internally:

- The route mask has IP mask format. In binary this needs to be a set of contiguous bits of 1 from left to right, followed by one or more contiguous bits of 0.
- The route destination and mask must match. This can be verified by checking that
  RtDestination and RtMask = RtDestination
  Example of good configuration: RtDestination = 10.1.1.0; Rt Mask = 255.255.255.0
  Example of bad configuration: RtDestination = 10.1.1.1; Rt Mask = 255.255.255.0

The following rules must be observed when you configure static routes:

- The route destination must not be a connected network
- The route gateway must be on a connected network. This rule applies to the gateway address of the default route as well. This can be verified by checking that:
  (RtGwy & Prt1Mask) == (Prt1IP & Prt1Mask) || (RtGwy & Prt2Mask) == (Prt2IP & Prt2Mask) || (RtGwy & Prt3Mask) == (Prt3IP & Prt3Mask)

  where

  & is the bitwise-AND operator

  == is the equality operator

  || is the logical OR operator

Routing behavior compared to previous releases

Prior to release 7.10, UR devices did not have an explicit manner of configuring routes. The only available route was the default route configured as part of the network settings (port gateway IP address). This limited the ability to route to specific destinations, particularly if these destinations were reachable through a different interface than the one on which the default gateway was.

Starting with UR 7.10, up to six static network routes can be configured in addition to a default route. The default route configuration was also moved from the network settings into the routing section.

The figure shows an example of topology that benefits from the addition of static routes.

Figure 5-18: Using static routes

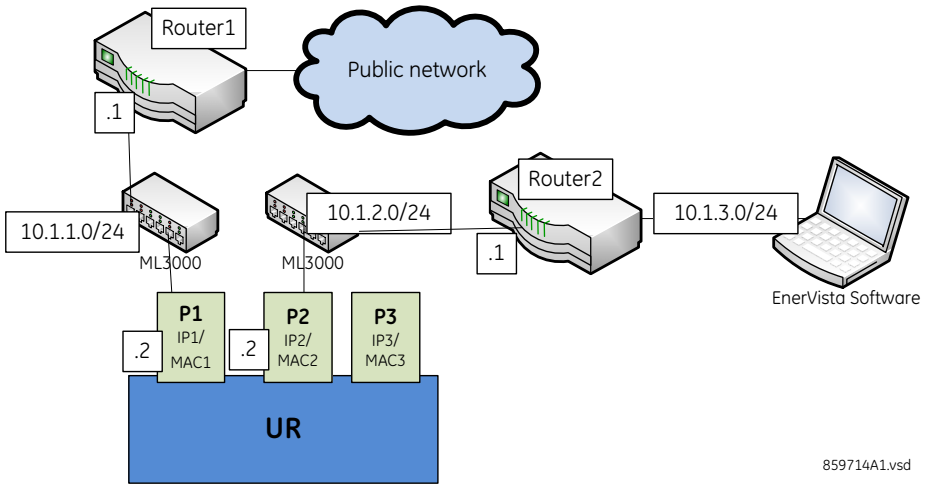

In the figure, the UR connects through the following two Ethernet ports:

- Port 1 (IP address 10.1.1.2) connects the UR to LAN 10.1.1.0/24 and to the Internet through Router1. Router1 has an interface on 10.1.1.0/24 and the IP address of this interface is 10.1.1.1.
- Port 2 (IP address 10.1.2.2) connects the UR to LAN 10.1.2.0/24 and to the EnerVista software through Router2. Router2 has an interface on 10.1.2.0/24 and the IP address of this interface is 10.1.2.1.

The configuration before release 7.10 was as follows:

- PRT1 IP ADDRESS = 10.1.1.2
  PRT1 SUBNET IP MASK = 255.255.255.0
  PRT1 GWY IP ADDRESS = 10.1.1.1
  PRT2 IP ADDRESS = 10.1.2.2
  PRT2 SUBNET IP MASK = 255.255.255.0

The behavior before release 7.10 was as follows. When sending packets to EnerVista, the UR noticed that the destination was not on a connected network and it tried to find a route to destination. Since the default route was the only route it knew, it used it. Yet EnerVista was on a private network, which was not reachable through Router1. Hence a destination unreachable message was received from the router.

The configuration starting with release 7.10 is as follows:

- PRT1 IP ADDRESS = 10.1.1.2
  PRT1 SUBNET IP MASK = 255.255.255.0
  PRT2 IP ADDRESS = 10.1.2.2
  PRT2 SUBNET IP MASK = 255.255.255.0
  IPV4 DEFAULT ROUTE: GATEWAY ADDRESS = 10.1.1.1
  STATIC NETWORK ROUTE 1: RT1 DESTINATION = 10.1.3.0/24; RT1 NET MASK = 255.255.255.0; and RT1 GATEWAY = 10.1.2.1

The behavior since release 7.10 is as follows. There is one added static network route to the destination 10.1.3.0/24, where a computer running EnerVista is located. This static route uses a different gateway (10.1.2.1) than the default route. This gateway is the address of Router2, which has knowledge about 10.1.3.0 and is able to route packets coming from the UR and destined to EnerVista.

Show routes and ARP tables

This feature is available on the web page interface when using basic security and by SFTP to an Administrator when using CyberSentry. The main menu contains an additional Communications menu and two submenus:

- Routing Table
- ARP Table

The tables outline the information displayed when the two submenus are selected.

Table 5-5: Routing table information

Field	Description
Destination	The IP address of the remote network to which this route points
Mask	The network mask for the destination
Gateway	The IP address of the next router to the remote network
Interface	Interface through which the specified network can be reached

Table 5-6: IP ARP information

Field	Description
IP Address	The network address that corresponds to Hardware Address
Age (min)	Age, in minutes, of the cache entry. A hyphen (-) means the address is local.
Hardware Address	LAN hardware address, a MAC address that corresponds to network address
Type	Dynamic or Static
Interface	Interface to which this address mapping has been assigned

5.3.5.8 Modbus protocol

SETTINGS ⇨ PRODUCT SETUP ⇨⇩ COMMUNICATIONS ⇨⇩ MODBUS PROTOCOL

■ MODBUS PROTOCOL ■	⇔	MODBUS SLAVE ADDRESS: 254	Range: 1 to 254 in steps of 1
	⇧	MODBUS TCP PORT NUMBER(502): 502	Range: 0 to 65535 in steps of 1

The serial communication ports utilize the Modbus protocol, unless the port is configured for DNP or IEC 60870-5-103 operation. This allows the EnerVista UR Setup software to be used on the port. UR devices operate as Modbus slave devices only.

For more information on the protocol, including the memory map table, see the UR Family Communications Guide.

MODBUS SLAVE ADDRESS — When using the Modbus protocol on the RS232 port, the N60 responds regardless of the **MODBUS SLAVE ADDRESS** programmed. For the RS485 port, each device on the serial bus must have a unique slave address from 1 to 254. Address 0 and addresses from 248 and up are reserved by the Modbus protocol specification, and so their use here is not recommended. Address 0 is the broadcast address to which all Modbus slave devices listen. Addresses do not have to be sequential, but no two devices can have the same address or conflicts resulting in errors occur. Generally, starting at 1, set each device added to the link to use the next higher address. When using Modbus TCP/IP, the client must use the programmed **MODBUS SLAVE ADDRESS** value in the Unit Identifier field.

MODBUS TCP PORT NUMBER — Modbus over TCP/IP can also be used on any of the Ethernet ports. The listening TCP port 502 is reserved for Modbus communications, and only in exceptional cases when **MODBUS TCP PORT NUMBER** is set to any other port. The **MODBUS TCP PORT NUMBER** setting sets the TCP port used by Modbus on Ethernet. A **MODBUS TCP PORT NUMBER** of 0 disables Modbus over TCP/IP, meaning closes the Modbus TCP port. When the port number is changed to 0, the change takes effect when the N60 is restarted. When it is set to 0, use the front panel or serial port to communicate with the relay.

NOTE

Do not set more than one protocol to the same TCP/UDP port number, as this results in unreliable operation of those protocols.

5.3.5.9 Protocol selection

SETTINGS ⇨ PRODUCT SETUP ⇨⇩ COMMUNICATIONS ⇨⇩ PROTOCOL& AUTHORITY

■ **PROTOCOL & AUTHORITY** ■	⇔	**SCADA Protocol: DNP 3.0**	Range: DNP 3.0, IEC 60870-5-104, IEC 60870-5-103
	⇩	**SFTP Protocol: Enabled**	Range: Disabled, Enabled
	⇩	**MMS Port Function: Enabled**	Range: Disabled, Enabled
	⇩	**CID FILE WRITE VIA MMS: Enabled**	Range: Disabled, Enabled
	⇩	**IEC 61850 MULTILEVEL CONTROL: Enabled**	Range: Disabled, Enabled
	⇩	**IED LOCAL STATUS: Off**	Range: FlexLogic operand

The **PROTOCOL** menu allows selection of one of the following protocols: DNP 3.0, IEC60870-104, or IEC60870-103.

SCADA PROTOCOL — This setting selects the SCADA protocol on which the unit communicates, either DNP3.0, IEC 60870-104 or IEC 60870-103, with DNP being the default. Options depend on order code. For any change to take effect, restart the unit.

The following table shows the protocols that are operational on the RS232, RS485, and Ethernet ports. It shows all possible combinations of the **PROTOCOL** and **DNP CHANNEL 1(2) PORT** settings.

Table 5-7: Port and protocol combinations

PROTOCOL setting	DNP CHANNEL 1(2) PORT settings	RS232	RS485	Ethernet
DNP	Channel 1: Eth TCP Channel 2: Eth TCP	Modbus	Modbus	DNP, Modbus, IEC 61850
	Channel 1: Eth TCP Channel 2: none	Modbus	Modbus	DNP, Modbus, IEC 61850
	Channel 1: none Channel 2: Eth TCP	Modbus	Modbus	DNP, Modbus, IEC 61850
	Channel 1: Eth UDP Channel 2: none	Modbus	Modbus	DNP, Modbus, IEC 61850
	Channel 1: Eth TCP Channel 2: RS485	Modbus	DNP	DNP, Modbus, IEC 61850
	Channel 1: Eth TCP Channel 2: RS232	DNP	Modbus	DNP, Modbus, IEC 61850
	Channel 1: Eth UDP Channel 2: RS485	Modbus	DNP	DNP, Modbus, IEC 61850
	Channel 1: Eth UDP Channel 2: RS232	DNP	Modbus	DNP, Modbus, IEC 61850
	Channel 1: RS485 Channel 2: Eth TCP	Modbus	DNP	DNP, Modbus, IEC 61850
	Channel 1: RS232 Channel 2: Eth TCP	DNP	Modbus	DNP, Modbus, IEC 61850
	Channel 1: RS485 Channel 2: RS232	DNP	DNP	Modbus, IEC 61850
	Channel 1: RS232 Channel 2: RS485	DNP	DNP	Modbus, IEC 61850
	Channel 1: RS485 Channel 2: none	Modbus	DNP	Modbus, IEC 61850
IEC 104		Modbus	Modbus	IEC 104, Modbus, IEC 61850
IEC 103		Modbus	IEC 103	Modbus, IEC 61850

SFTP — Enables and disables file transfer to/from the relay by Secure Shell (SSH) and Secure File Transfer Protocol (SFTP). This setting displays when using IEC 61850 without CyberSentry.

MMS PORT FUNCTION — When set to **"**Disabled**"**, MMS port 102 is closed and MMS client connection to UR fails. This setting does not, however, affect the GOOSE operation. When set to "Enabled", MMS client can connect to UR IEDs over port 102.

CID FILE WRITE FROM MMS — When set to **"**Enabled**"**, CID file write from MMS client is enabled, otherwise CID file write from MMS client is not allowed.

MULTILEVEL CONTROL — When set to "Enabled", control authority from multiple levels (Bay, Station and Remote) are allowed simultaneously based on Local/Remote status and status authority status. Otherwise only one level has the authority to control, based on Local/Remote status and status authority status.

NOTE

MULTILEVEL CONTROL setting is only available for order codes with the IEC 61850 software option. It is only applicable to Breaker and Disconnect switch control related logical nodes (XCBR/XSWI and CSWI), which instantiates Loc and LocSta data objects. For all other controllable data objects in other logical nodes (like virtual inputs in GGIO2) **MULTILEVEL CONTROL** setting is not applicable.

IED LOCAL STATUS — Selects an operand, that indicates the IED is in Local or Remote mode. When the operand value is set, the IED is in Local mode and any commands from remote protocols (IEC 61850) are rejected.

NOTE

IED LOCAL STATUS setting is only available for order codes with the IEC 61850 software option. It is applicable for all IEC 61850 commands including Breaker and Disconnect switch controls, and the commands are allowed only when the FlexOperand assigned to **IED LOCAL STATUS** setting is at logic "0". When the FlexOperand assigned to IED Local Status is at logic "1", all the control actions from IEC 61850 client are blocked.

5.3.5.10 DNP protocol

SETTINGS ⇨ PRODUCT SETUP ⇨⇩ COMMUNICATIONS ⇨⇩ DNP PROTOCOL

■ DNP PROTOCOL ■	⇔ ■ DNP CHANNELS ■	See below
	⇕ DNP ADDRESS: 1	Range: 0 to 65535 in steps of 1
	⇕ ■ DNP NETWORK ■ CLIENT ADDRESSES	See below
	⇕ DNP TCP/UDP PORT NUMBER(20000): 20000	Range: 0 to 65535 in steps of 1
	⇕ DNP UNSOL RESPONSE FUNCTION: Disabled	Range: Enabled, Disabled
	⇕ DNP UNSOL RESPONSE TIMEOUT: 5 s	Range: 0 to 60 s in steps of 1
	⇕ DNP UNSOL RESPONSE MAX RETRIES: 10	Range: 1 to 255 in steps of 1
	⇕ DNP UNSOL RESPONSE DEST ADDRESS: 1	Range: 0 to 65519 in steps of 1
	⇕ DNP CURRENT SCALE FACTOR: 1	Range: 0.001, 0.01. 0.1, 1, 10, 100, 1000, 10000, 100000, 1000000, 10000000, 100000000
	⇕ DNP VOLTAGE SCALE FACTOR: 1	Range: 0.001, 0.01. 0.1, 1, 10, 100, 1000, 10000, 100000, 1000000, 10000000, 100000000
	⇕ DNP POWER SCALE FACTOR: 1	Range: 0.001, 0.01. 0.1, 1, 10, 100, 1000, 10000, 100000, 1000000, 10000000, 100000000
	⇕ DNP ENERGY SCALE FACTOR: 1	Range: 0.001, 0.01. 0.1, 1, 10, 100, 1000, 10000, 100000, 1000000, 10000000, 100000000
	⇕ DNP PF SCALE FACTOR: 1	Range: 0.001, 0.01. 0.1, 1, 10, 100, 1000, 10000, 100000, 1000000, 10000000, 100000000
	⇕ DNP OTHER SCALE FACTOR: 1	Range: 0.001, 0.01. 0.1, 1, 10, 100, 1000, 10000, 100000, 1000000, 10000000, 100000000
	⇕ DNP CURRENT DEFAULT DEADBAND: 30000	Range: 0 to 100000000 in steps of 1
	⇕ DNP VOLTAGE DEFAULT DEADBAND: 30000	Range: 0 to 100000000 in steps of 1
	⇕ DNP POWER DEFAULT DEADBAND: 30000	Range: 0 to 100000000 in steps of 1
	⇕ DNP ENERGY DEFAULT DEADBAND: 30000	Range: 0 to 100000000 in steps of 1
	⇕ DNP PF DEFAULT DEADBAND: 30000	Range: 0 to 100000000 in steps of 1

⇕	**DNP OTHER DEFAULT DEADBAND: 30000**	Range: 0 to 100000000 in steps of 1
⇕	**DNP TIME SYNC IIN PERIOD: 1440 min**	Range: 1 to 10080 min. in steps of 1
⇕	**DNP MESSAGE FRAGMENT SIZE: 240**	Range: 30 to 2048 in steps of 1
⇕	**DNP OBJECT 1 DEFAULT VARIATION: 2**	Range: 1, 2
⇕	**DNP OBJECT 2 DEFAULT VARIATION: 2**	Range: 1, 2, 3
⇕	**DNP OBJECT 20 DEFAULT VARIATION: 1**	Range: 1, 2, 5, 6
⇕	**DNP OBJECT 21 DEFAULT VARIATION: 1**	Range: 1, 2, 9, 10
⇕	**DNP OBJECT 22 DEFAULT VARIATION: 1**	Range: 1, 2, 5, 6
⇕	**DNP OBJECT 23 DEFAULT VARIATION: 1**	Range: 1, 2, 5, 6
⇕	**DNP OBJECT 30 DEFAULT VARIATION: 1**	Range: 1, 2, 3, 4, 5
⇕	**DNP OBJECT 32 DEFAULT VARIATION: 1**	Range: 1, 2, 3, 4, 5, 7
⇕	**DNP NUMBER OF PAIRED CONTROL POINTS: 0**	Range: 0 to 32 in steps of 1
⇕	**DNP TCP CONNECTION TIMEOUT: 120 s**	Range: 10 to 7200 s in steps of 1
⇑	**DNP EVENT TIME BASE: LOCAL**	Range: UTC, LOCAL

The Distributed Network Protocol (DNP) allows for the optimization of control and data acquisition between the equipment in the substation and the central control center. The protocol is scalable; that is, it is designed to be compatible with the latest high speed LAN technology yet still be implemented over slower speed serial links.

The DNP improves upon many master-slave protocols by improving overall communication performance requirements and provides time-stamping with millisecond accuracy.

The N60 supports DNP version 3.0.

DNP is enabled when the **SETTINGS ⇨ PRODUCT SETUP ⇨⇩ COMMUNICATIONS ⇨ PROTOCOL** setting is set to DNP 3.0. The N60 can be used as a DNP slave device connected to multiple DNP masters (usually an RTU or a SCADA master station). Since the N60 maintains two sets of DNP data change buffers and connection information, two DNP masters can actively communicate with the N60 at one time.

DNP is not available using the USB port on the graphical front panel.

See the UR Family Communications Guide for more information on DNP.

NOTE

For any change to DNP settings, restart the relay.

The DNP Channels sub-menu is shown.

SETTINGS ⇨ PRODUCT SETUP ⇨⇩ COMMUNICATIONS ⇨⇩ DNP PROTOCOL ⇨ DNP CHANNELS

■ **DNP CHANNELS** ■	⇔	**DNP CHANNEL 1 PORT: NONE**	Range: NONE, COM1 - RS485, COM2 - RS485, FRONT PANEL - RS232, NETWORK - TCP, NETWORK - UDP

⇧ **DNP CHANNEL 2 PORT: NONE** Range: NONE, COM1 - RS485, COM2 - RS485, FRONT PANEL - RS232, NETWORK - TCP

The **DNP CHANNEL 1 PORT** and **DNP CHANNEL 2 PORT** settings select the communications port assigned to the DNP protocol for each channel. Once DNP is assigned to a serial port, DNP is the only protocol running on that port; Modbus or IEC 60870-5-103 are disabled. If DNP is assigned to RS485, the protocol must be set to DNP on the serial port configuration as well, for the change to take effect. When the **DNP CHANNEL 1(2) PORT** setting is set to "Network - TCP," the channel 1(2) DNP protocol can be used over TCP/IP on the Ethernet ports. When this value is set to "Network - UDP," the DNP protocol can be used over UDP/IP on channel 1 only. The "Front Panel - RS232" setting does not apply to the graphical front panel; when selected the DNP client cannot establish a connection on a USB port.

NOTE

Do not set more than one protocol to the same TCP/UDP port number, as this results in unreliable operation of those protocols.

The **DNP ADDRESS** setting is the DNP slave address. This number identifies the N60 on a DNP communications link. Assign a unique address to each DNP slave.

The N60 can specify a maximum of five clients for its DNP connections. These are IP addresses for the controllers to which the N60 can connect. The settings follow.

SETTINGS ⇨ PRODUCT SETUP ⇨⇩ COMMUNICATIONS ⇨⇩ DNP PROTOCOL ⇨ DNP NETWORK CLIENT ADDRESSES

■ **DNP NETWORK**
■ **CLIENT ADDRESSES**

⇔ **CLIENT ADDRESS 1: 0.0.0.0** Range: standard IP address

⇩

⇧ **CLIENT ADDRESS 5: 0.0.0.0** Range: standard IP address

The **DNP TCP/UDP PORT NUMBER** setting is for normal DNP operation. To close the port, set the port number to 0.

The **DNP UNSOL RESPONSE FUNCTION** is set to "Disabled" for RS485 applications since there is no collision avoidance mechanism. The **DNP UNSOL RESPONSE TIMEOUT** sets the time the N60 waits for a DNP master to confirm an unsolicited response. The **DNP UNSOL RESPONSE MAX RETRIES** setting determines the number of times the N60 retransmits an unsolicited response without receiving confirmation from the master; a value of "255" allows infinite re-tries. The **DNP UNSOL RESPONSE DEST ADDRESS** is the DNP address to which all unsolicited responses are sent. The IP address to which solicited responses are sent is determined by the N60 from the current TCP connection or the most recent UDP message.

The DNP scale factor settings are numbers used to scale analog input point values. These settings group the N60 analog input data into the following types: current, voltage, power, energy, power factor, and other. Each setting represents the scale factor for all analog input points of that type. For example, if the **DNP VOLTAGE SCALE FACTOR** setting is set to "1000," all DNP analog input points that are voltages are returned with values 1000 times smaller (for example, a value of 72000 V on the N60 is returned as 72). These settings are useful when analog input values must be adjusted to fit within certain ranges in DNP masters. Note that a scale factor of 0.1 is equivalent to a multiplier of 10 (that is, the value is 10 times larger).

The **DNP DEFAULT DEADBAND** settings determine when to trigger unsolicited responses containing analog input data. These settings group the N60 analog input data into the following types: current, voltage, power, energy, power factor, and other. Each setting represents the default deadband value for all analog input points of that type. For example, to trigger unsolicited responses from the N60 when any current values change by 15 A, the **DNP CURRENT DEFAULT DEADBAND** setting is set to "15". Note that these settings are the deadband default values. DNP object 34 points can be used to change deadband values, from the default, for each individual DNP analog input point.

The **DNP TIME SYNC IIN PERIOD** setting determines how often the Need Time Internal Indication (IIN) bit is set by the N60. Changing this time allows the DNP master to send time synchronization commands more or less often, as required.

The **DNP MESSAGE FRAGMENT SIZE** setting determines the size, in bytes, at which message fragmentation occurs. Large fragment sizes allow for more efficient throughput; smaller fragment sizes cause more application layer confirmations to be necessary, which provides more robust data transfer over noisy communication channels.

NOTE

Check the "DNP Points Lists" N60 web page to view the analog inputs and/or binary inputs points lists. This page can be viewed with a web browser by entering the IP address of the N60 Ethernet port employed to access the N60 Main Menu, then by clicking the **Device Information Menu** item, then the **DNP Points Lists** item.

The **DNP OBJECT 1 DEFAULT VARIATION** to **DNP OBJECT 32 DEFAULT VARIATION** settings select the DNP default variation number for object types 1, 2, 20, 21, 22, 23, 30, and 32. The default variation refers to the variation response when variation 0 is requested and/or in class 0, 1, 2, or 3 scans. See the DNP Implementation section in the UR Family Communications Guide.

The DNP binary outputs typically map one-to-one to IED data points. That is, each DNP binary output controls a single physical or virtual control point in an IED. In the N60 relay, DNP binary outputs are mapped to virtual inputs. However, some legacy DNP implementations use a mapping of one DNP binary output to two physical or virtual control points to support the concept of trip/close (for circuit breakers) or raise/lower (for tap changers) using a single control point. That is, the DNP master can operate a single point for both trip and close, or raise and lower, operations. The N60 can be configured to support paired control points, with each paired control point operating two virtual inputs. The **DNP NUMBER OF PAIRED CONTROL POINTS** setting allows configuration of 0 to 64 binary output paired controls. The control points pairing starts from the highest number of binary outputs available i.e. 128. Points not configured as paired operate on a one-to-one basis. So if the user selects a value of "2" for this setting, the pairing starts from the highest number; 128. Control points 128-127 and 126-125 operate in pairs and the rest (1-124) are operated individually.

The **DNP TCP CONNECTION TIMEOUT** setting specifies a time delay for the detection of dead network TCP connections. If there is no data traffic on a DNP TCP connection for greater than the time specified by this setting, the connection is aborted by the N60. This frees up the connection to be re-used by a client.

NOTE

For any change to DNP settings, restart the relay.

5

5.3.5.11 DNP / IEC 60870-5-104 point lists

SETTINGS ⇨ PRODUCT SETUP ⇨⇩ COMMUNICATIONS ⇨⇩ DNP / IEC104 POINT LISTS

■ DNP / IEC104 ■ POINT LISTS	⇔	■ BINARY INPUT / MSP ■ POINTS	See below
	⇧	■ ANALOG INPUT / MME ■ POINTS	See below

Up to 256 binary and up to 256 analog input points for the DNP protocol, or the MSP and MME points for IEC 60870-5-104 protocol, can be configured. The value for each point is user-programmable and can be configured by assigning FlexLogic operands for binary inputs / MSP points or FlexAnalog parameters for analog inputs / MME points.

The menu for the binary input points (DNP) or MSP points (IEC 60870-5-104) follows.

SETTINGS ⇨ PRODUCT SETUP ⇨⇩ COMMUNICATIONS ⇨⇩ DNP / IEC104 POINT LISTS ⇨ BINARY INPUT / MSP POINTS

■ BINARY INPUT / MSP ■ POINTS	⇔	Point: 0 Off	Range: FlexLogic operand
	⇩	Point: 1 Off	Range: FlexLogic operand
	⇧	Point: 255 Off	Range: FlexLogic operand

Up to 256 binary input points can be configured for the DNP or IEC 60870-5-104 protocols. The points are configured by assigning an appropriate FlexLogic operand. See the Introduction to FlexLogic section in this chapter for the range of assignable operands.

Changes to the DNP / IEC 60870-5-104 point lists take effect when the N60 is restarted.

The menu for the analog input points (DNP) or MME points (IEC 60870-5-104) follows.

SETTINGS ⇨ PRODUCT SETUP ⇨⇩ COMMUNICATIONS ⇨⇩ DNP / IEC104 POINT LISTS ⇨⇩ ANALOG INPUT / MME POINTS

■ ANALOG INPUT / MME ■ POINTS	⇔	**Point: 0** **Off**	Range: any FlexAnalog parameter
	⇩	**Point: 1** **Off**	Range: any FlexAnalog parameter
	⇩		
	⇧	**Point: 255** **Off**	Range: any FlexAnalog parameter

Up to 256 analog input points can be configured for the DNP or IEC 60870-5-104 protocols. The analog point list is configured by assigning an appropriate FlexAnalog parameter to each point. See the FlexAnalog Parameters section in Appendix A for the range of assignable parameters.

Changes to the DNP / IEC 60870-5-104 point lists take effect when the N60 is restarted.

NOTE

The DNP / IEC 60870-5-104 point lists always begin with point 0 and end at the first "Off" value. Since DNP / IEC 60870-5-104 point lists must be in one continuous block, any points assigned after the first "Off" point are ignored.

5.3.5.12 IEC 61850 protocol

SOFTWARE OPTION

The N60 is provided with optional IEC 61850 communications, specified as a software option at the time of ordering.

The IEC 61850 settings are accessible in EnerVista software or a substation configuration language (SCL) generating tool. The path is **Settings > Product Setup > Communications > IEC 61850** or **Settings > IEC 61850**. The settings are not accessible from the front panel of the device.

NOTE

IEC 61850 messaging can form part of protection schemes. Consider IEC 61850 settings with the same criticality as protection element settings. To ensure reliable performance of protection schemes utilizing IEC 61850 messaging, route IEC 61850 traffic on a separate port from SCADA communications, or use redundant, independent ports, and a high-speed network recovery method, such as PRP.

Overview

IEC 61850 is a series of international standards and technical reports applicable to power utility automation systems. It includes semantics, abstract communication services, specific communication services, performance specifications, network engineering guidelines, configuration description methodologies, and engineering processes. The standard enables interoperability among intelligent electronic devices (IEDs) from different suppliers and interoperability among software configuration tools from different suppliers. Interoperability in this case is the ability for IEDs to operate on the same network or communication path sharing information and commands, and for configuration tools to understand the communication aspects of each other's configuration files.

The UR family supports a large subset of IEC 61850 features. These are detailed in the UR Family Communications Guide and include the information model, GOOSE publish, GOOSE subscribe, buffered reports, unbuffered reports, and Manufacturing Message Specification (MMS) query, read, write, and control services. In addition, the URs and their EnerVista UR Setup software support IEC 61850 Substation Configuration Language (SCL) file import/export and merging.

Many settings of UR protection, control, and monitoring elements, that is to say elements that are not concerned with the IEC 61850 protocol, can nevertheless be accessed via IEC 61850. These settings are documented elsewhere in this Settings chapter. This section of the Settings chapter deals solely with the settings that configure the IEC 61850 protocol itself.

The maximum number of simultaneous clients supported by the UR family is six.

IEC 61850 Editions 1 and 2

The relay supports both IEC 61850 Edition 1 and Edition 2. The default is Edition 2.

Edition 2 relays use extensions to support IEC/TR 61850-90-5. Edition 2 IEC 61850 configuration tools can only interoperate with Edition 2 devices, (UR 7.3x or later). When using Edition 2, the relay uses Edition 2 SCL, which differs from Edition 1 SCL.

Edition 1 support is not present in UR versions 7.3x to 7.6x. support for edition 1 in edition 2 relays was introduced from firmware version 7.7x.

When set to Edition 1:

- The test flag in the Tx GOOSE PDU is set to TRUE when the **IED BEHAVIOUR** setting has a value of "Test" or "Test Blocked".
- Routable GOOSE is not supported
- Process Bus Module is not supported (order code 85, 86, or 87)
- Process Bus GOOSE is not supported
- The FlexLogic category does not display in the IEC 61850 panes in the EnerVista UR Setup software
- With SCL file import, for Edition 1 the IP address in the ConnectedAP element must match one IP address of the device, while for Edition 2 one of the three IP addresses in the ConnectedAP element must match

The fields that display in the software depend on the selected Edition and the relay. Differences are noted in the sections that follow. If required, consult the Model Implementation Conformance Statement (MICS) section of the UR Family Communications Guide to understand what applies to your setup.

To switch from Edition 2 to Edition 1, the EnerVista UR Setup software must be used. A new device must be created in the Offline Window either from an existing device or as a new device. When creating the new device, select the "IEC61850 Edition" as "Edition 1". For an existing device, select IEC 61850 Edition 1 or Edition 2 under **Settings > Product Setup > Communications > Protocol & Authority**. When a non- HardFiber Process Bus Module is present, only Edition 2 is used. Switching defaults to the IEC 61850 settings, except GGIO1, GGIO2, GGIO4, and those for the graphical front panel. When a message displays that a reboot is required, use the **Maintenance > Reboot Relay** Command.

EnerVista setup for IEC 61850

The EnerVista UR Setup software provides the interface to configure N60 for the IEC 61850 protocol. This section describes the interface. The software also supports import/export and merging of IEC 61850 Substation Configuration Language (SCL) files as documented in the UR Family Communications Guide.

The IEC 61850 settings cannot be accessed through the UR front panel and are instead accessible with the UR EnerVista Setup software, via MMS query, read, and write services, or via IEC 61850 SCL file transfer. Accordingly, whereas other settings are presented in this manual as they appear on the front panel, IEC 61850 settings are presented as they appear in the software. See the UR Family Communications Guide for MMS and SCL access. Note that if you update the IEC 61850 settings in the EnerVista software by writing to them by MMS while the corresponding IEC 61850 panel is open in EnerVista, you need to close then open the panel in EnerVista for the correct readings to display.

The IEC 61850 protocol settings are accessed through software panels, which are selected either in the **Online Window** area (see figure) or the **Offline Window** area in the EnerVista software.

The EnerVista software also includes an interface that is compatible with firmware versions 5.0 to 7.2 to configure subscribers. Use the Simplified GOOSE Configurator in the Offline Window area.

Figure 5-19: IEC 61850 Edition 2 setup screen in EnerVista

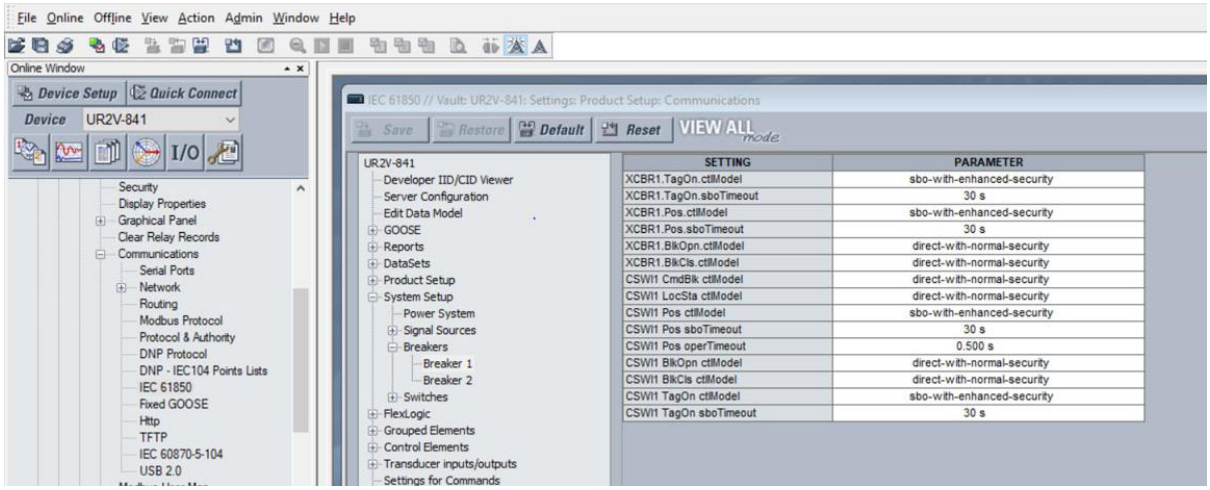

The IEC 61850 window is divided into a navigation pane on the left and a settings panel on the right. You expand and click an option on the left to display its panel on the right. The following figure shows an example for Server Configuration. The **SETTING** column contains the names of the settings, and the **PARAMETER** column is used to enter the settings. Hovering the mouse over a setting name displays a tool-tip showing the IEC 61850 information model name of the setting or its location in SCL files.

The content displayed varies with UR firmware version. For example, the version 8.4 fields shown differ from the version 7.9 fields.

5

Figure 5-20: IEC 61850 panel (Edition 2)

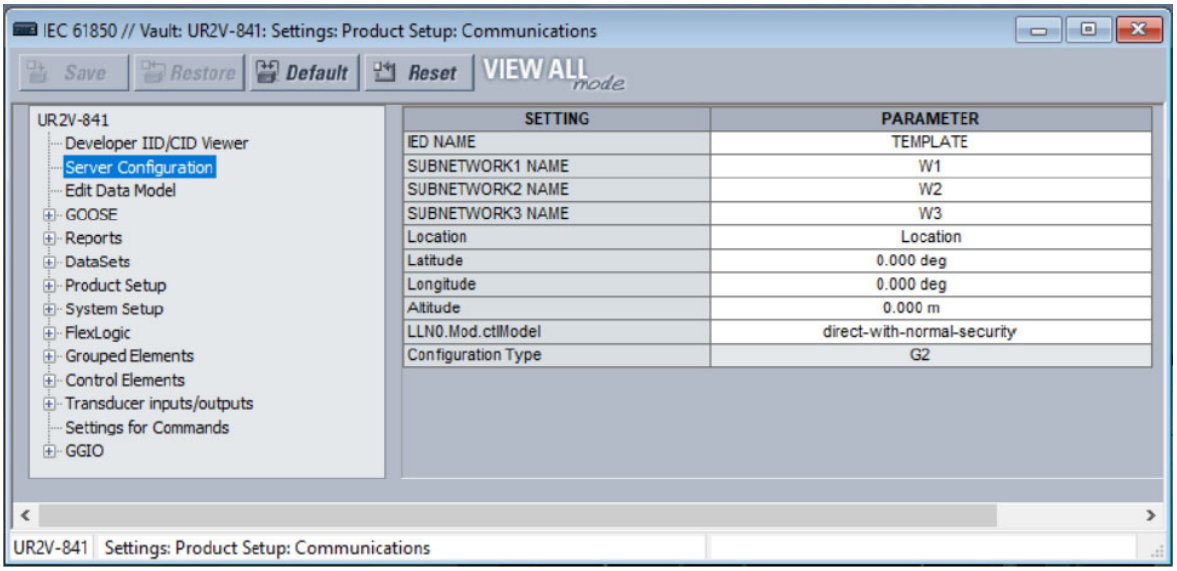

Opening the IEC 61850 window while online causes the EnerVista UR Setup software to retrieve and import an SCL file from the N60. This System Configuration Description (SCD) file contains all the settings in the UR at the time of the file request, both those that are mapped into the IEC 61850 information model (that is, the "public" sections) and those that are not in the model (that is, the "private" section). The software imports all of these settings into the current session, not just those in the IEC 61850 window. To avoid loss of any unsaved setting changes made in other panes during the current session, all other panes for the N60 must be closed before the IEC 61850 pane opens, and the software prompts for this when required. Panels for other devices can be open concurrently to facilitate parameter coordination.

When CyberSentry security is enabled, editable settings depend on the user role logged in. For example, an Administrator and Engineer can change settings. If prompted for a "Settings password," it means the Administrator or Engineer password.

The **Restore** button restores settings in the window to their last saved values. The **Default** button reverts settings in the window to factory default values on th current view or Oscillography, Data Logger, or FlexLogic Equation Editor pre-configured values. The **Reset** button reverts all IEC 61850 settings to the factory default values, not just the current window. (In other settings windows, the button reverts settings in the window to factory default values.)

When a setting is enabled, its pane continues to read Disabled until relaunched. There is no polling capability to automatically update the IEC 61850 readings, so the panel needs to be closed then opened for the correct status to display. Good practice is to close any panel not in use because changes being made by other users are reflected only upon relaunch of the panel.

Some of the IEC 61850 settings use floating point data, which guarantees accurate representation of real numbers up to seven digits. Numbers with more than seven digits are approximated within a certain precision. This can result in differences between what is entered and what is saved, and can result in differences shown on a settings comparison report.

Create CID and settings files

A configured IED description (CID) file is created when settings are sent to the device, for example from the Offline Window area. A CID file can be created by right-clicking a device in the Offline Window area and selecting the **Save As** option.

When the **Save** button is clicked in the online IEC 61850 window, the software prepares a CID file containing all the settings of the device and sends the CID file to the device. Upon receipt, the N60 checks the CID file for correctness, going out of service, then back into service when the CID file is accepted. The software displays a message when the N60 is running the new settings, confirming successful transfer. This process can take a minute or so due to the amount of processing required by the software and the N60.

When the **Save** button is clicked in the offline IEC 61850 window, the software saves to local storage, for example the hard drive, a .urs file containing all settings of the device.

View IID/CID files

The IEC 61850 file types are as follows:

- ICD - IED capability description - Template file for an unconfigured IED
- IID — Instantiated IED capability description file — Actual settings in the UR
- CID — Configured IED description file — Settings sent to the UR (may or may not contain the present settings)
- ICD, IID, and CID files are all XML text files that use the same IEC 61850 XML schema.

Note: The IID file type applies to IEC 61850 Edition 2 only.

IID and CID files are viewable. For example, after modifying settings in the IEC 61850 panels and clicking **Developer IID/ CID Viewer** in the software, a CID file generates and an SCL Viewer shows the updated CID file content. There are no edit or save functions; use instead the Back Up and Restore Settings instructions later in this document to save the files.

Searches are case insensitive.

Figure 5-21: View CID settings file (Edition 2)

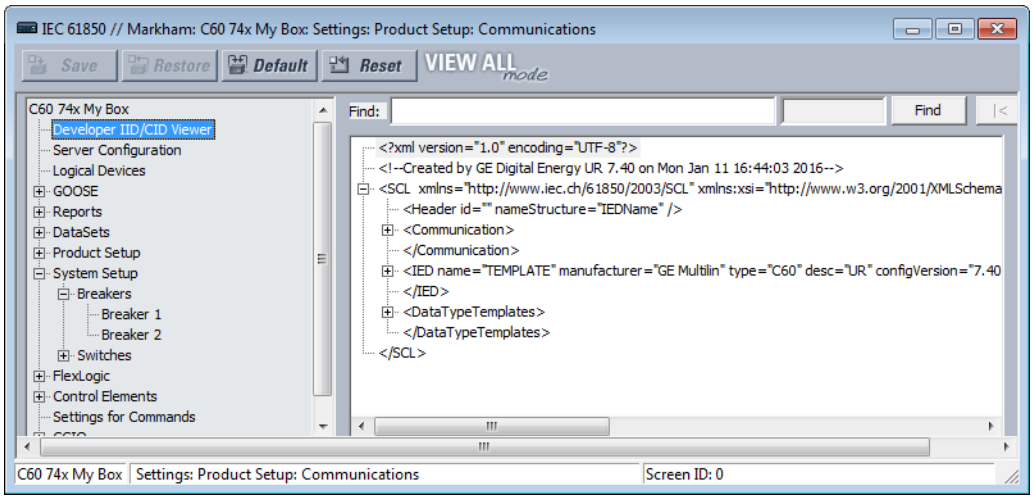

Server configuration

The Server Configuration panel contains IEC 61850 settings relevant to the server functions of the IED implementation.

The path is **Settings > Product Setup > Communications > IEC 61850 > Server Configuration**.

The following settings are available, where <iedName> is a syntactic variable representing the present value of the **IED NAME** setting. The settings vary with firmware version, IEC 61850 edition, and device capability.

5

IED NAME

Range: 1 to 58 VisibleString characters
Default: TEMPLATE

The value entered sets the name used by IEC 61850 for the N60. An IED name unique within the network must be entered for proper operation. Valid characters are upper and lowercase letters, digits, and the underscore (_) character. The first character must be a letter.

The **IED NAME** and the **Product LD inst name** comprise the <LDName> for a product. The longest LD inst are "Master" and "System" at six characters, with Master being fixed and the others configurable with the configurable Logical device feature. The **IED NAME** is therefore restricted to 58 characters to meet a 64 character limit.

SUBNETWORK1(5) NAME

Range: 0 to 255 ASCII characters
Default: W1, W2, W3, W4, W5

Subnetworks 1 to 3 display for Editions 1 and 2. Subnetworks 4 and 5 display for Edition 2 with Process Bus Module.

When importing an SCL file:

- Subnetwork 1 to 3 names are identified by the contained ConnectedAP element of the target IED
- If a ConnectedAP element is missing, the respective subnetwork name uses the default value
- When the IEC 61850 server Edition is set to 1 (under **Product Setup > Communications > Protocol**), one ConnectedAP is available in the SCL file. Only the respective subnetwork name is populated and editable. The rest of the subnetwork names are read-only with default values. After importing an Edition 1 SCL file, you can select the Access Point that needs to be populated from the Edition 1 SCL file and you can edit the subnetwork name in the EnerVista UR Setup software.
- Subnetwork 1 to 3 names need to be unique

When exporting an SCL file:

- Subnetwork 1 to 3 names are preserved
- When the IEC 61850 server Edition is set to 1, the selected Access Point and respective subnetwork names are populated

Access Point

Range: S1, S2, S3

Default: S1

This setting applies to IEC 61850 Edition 1. It is the subnetwork.

Location

Range: 0 to 255 ASCII characters

Default: Location

The value entered sets the value of the data attribute <LDName>/LPHD1.PhyNam.location. This data attribute is provided by the protocol to allow the user to declare where the equipment is installed.

Latitude

Range: -90.000 to 90.000 degrees in steps of 0.001 degree

Default: 0.000 deg

The value entered sets the value of the data attribute <LDName>/LPHD1.PhyNam.latitude. This data attribute is provided by the protocol to declare the geographical position of the device in WGS84 coordinates -latitude. Negative values indicate a southern latitude. WGS refers to the world geodetic system, which is used in global positioning systems (GPS), and 84 is the current version of the standard.

Longitude

Range: -180.000 to 180.000 degrees in steps of 0.001 degree

Default: 0.000 deg

The value entered sets the value of the data attribute <LDName>/LPHD1.PhyNam.longitude. This data attribute is provided by the protocol to declare the geographical position of the device in WGS84 coordinates -longitude. Negative values indicate a western longitude.

Altitude

Range: 0 to 10,0000 m in steps of 1 m

Default: 0.000 m

The value entered sets the value of the data attribute <LDName>/LPHD1.PhyNam.altitude. This data attribute is provided by the protocol to declare the geographical position of the device in WGS84 coordinates - altitude.

LLN0.Mod.ctlModel

Range: status-only, direct-with-normal-security, sbo-with-normal-security

Default: sbo-with-normal-security

This setting specifies the control service that clients must use to provide control input to the **IED MODE** logic of the B30. An "on" control to <LDName>/LLN0.Mod triggers the “On” behavior logic, a “test” control triggers the “Test” behavior logic, and a “test/blocked” control triggers the “Test-Blocked” logic.

Configuration Type

Range: G2, E3-2.0

Default: G2

This setting is read only. It specifies the method used to describe GOOSE subscription configuration in SCL. See the UR Family Communications Guide for details. In the G2 mode, the CID file contains IED elements for IEDs subscribed to by this IED containing GOOSE subscription information. In the E3 2.0 mode, the CID file has only one IED element and GOOSE subscription information is coded in data objects in the standard LGOS logical node used to monitor reception of the subscribed GOOSE. UR 7.30 or later accepts either mode. The set value is for the entire EnerVista installation and is preserved between sessions. To change this global field, click **File > Preferences** and access the IEC 61850 panel; the device does not need to be connected.

Logical devices

The Edit Data Model panel contains IEC 61850 settings relevant to the configurable logical devices feature, wherein logical devices can be created, naming can be reconfigured and logical nodes can be added, removed, or reassigned.

The path is **Settings > Product Setup > Communications > IEC 61850 > Edit Data Model**.

Figure 5-22: Edit Data Model pane with devices center and nodes right

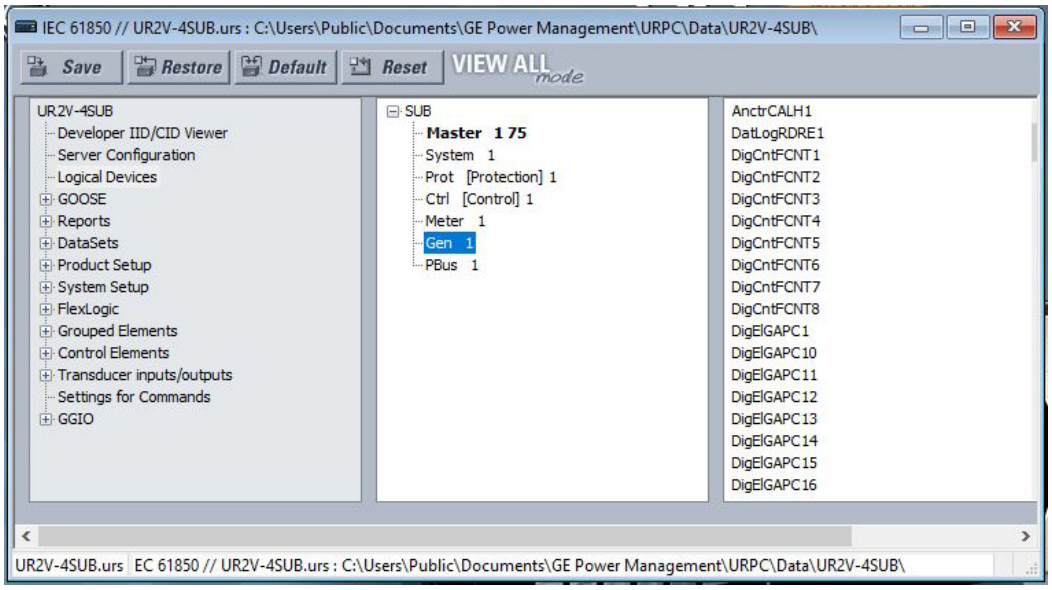

To configure logical devices and logical nodes:

1. Right-click one or more entries and edit an existing device, add a new one, or move a logical node. Depending on selection, the prefix and instance number of a node are editable, for example prefix CBArc0 and instance 30 can be edited in CBArc0SCBR30. Nodes that are not editable are grayed-out.

   The rest of this section explains the functions.

5

The default logical device categories are as follows:

- **Master** — Communications, including GOOSE, reports, remote inputs, virtual Inputs, and setting group control
- **System** — Power system devices: breakers, switches, CTs, VTs, and so on, including interfaces to these, such as AC inputs, contact I/O, transducer I/O, HardFiber I/O
- **Prot** — Protection and protection-related functions
- **Ctrl** — Control and monitoring functions
- **Meter** — Metering and measurement functions, including signal sources
- **Gen** — FlexLogic, Virtual Outputs, non-volatile latches, FlexElements, recording (for example oscillography), security, front panel, clock
- **PBus** — UR Process Bus Module functions, such as SV subscription, AC Banks, and process bus Time Synchronization. Displays when order code includes a Process Bus Module. Logical device is read-only.

For the Master logical device, the following logical nodes are read-only:

- The LLN0 in the Master logical device, which includes setting group, GOOSE and report control blocks, and datasets
- LPHD1 — Models common issues for physical devices
- GGIO3 — For RxGOOSE Inputs
- Process Bus Module logical nodes

The Edit Data Model panel has middle and right panes. The middle pane has a list of the instantiated logical devices in the sequence that they appear in SCL, with one device selected. The right pane has a list of the logical nodes presently assigned to the selected logical device in lexicographic order by logical node name.

In UR version 8.3x and later, the default IEC 61850 data model in the new UR device configuration is very basic. It contains just enough to allow the IEC 61850 server to run and accept CID files. The ICT tool for the new UR device is EnerVista setup. The entire default UR IEC 61850 data model is also available and can be used. You have to use the ICT tool to add the required logical devices and logical nodes for each application, and then send the CID file to configure the UR device. The process for adding and configuring logical devices and logical nodes is as follows:

In the following example, the Protection logical device has been set to instance name "Prot," its function-related name to "Feeder1Prot" and its configuration revision to "2016-03-07 08:46."

Right-clicking on a logical device display to invoke a menu allows:

- insertion of a new logical device immediately below the selected one
- deletion of the selected logical device
- editing of the selected logical device's parameters.

Figure 5-23: Menu for logical device

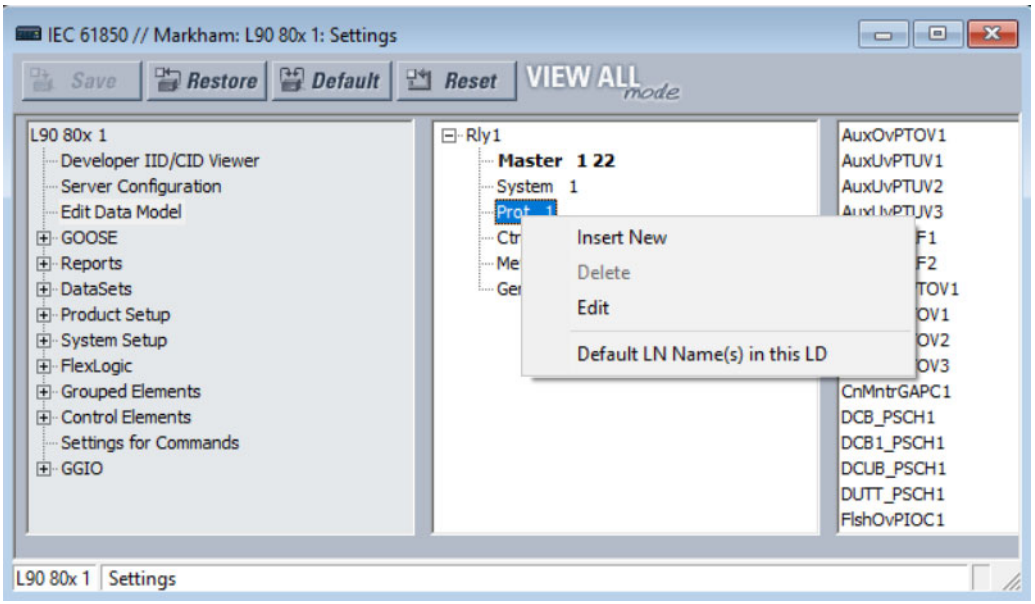

If there are already 16 logical devices instantiated, the insert option is disabled and grayed-out.

If the selected logical device is Master, or it contains any logical nodes other than LLN0, the delete option is disabled and grayed-out.

The **Default LN Name(s) in this LD** option resets logical node names to their default values. When the logical node name is edited, the logical nodes pane displays the edited name followed by the default logical node name in brackets. The right-click menu at the IED, logical device, and logical node level provides an option to default the logical node name(s) within the scope of selection. That means that resetting the logical node names to their default values at the IED level, will do the same for all logical node names in the network. The same applies at the logical device level too. If the insert option is selected, or the edit option is selected for other than the Master logical device, a logical device parameters edit dialog opens.

Figure 5-24: Insert new logical device (Edition 2)

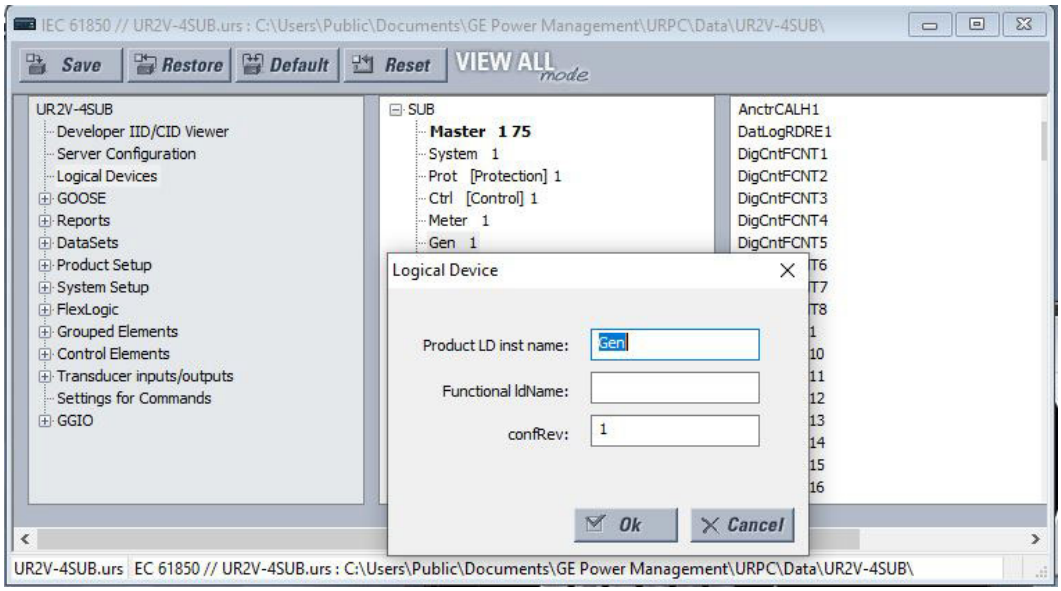

If the edit option is selected for the Master logical device, the **Product LD inst name** setting is not editable.

Figure 5-25: Edit logical device

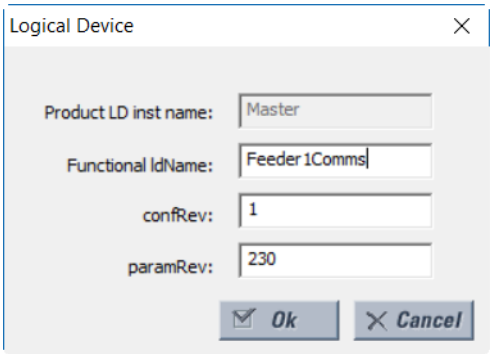

After confirming the entered values for **Product LD inst name** and **Functional ldName**, they are checked for uniqueness in the UR, and are updated in the pane.

The settings are explained as follows, where <iedName> is a syntactic variable representing the present value of the **IED NAME** setting. When adding or editing a logical device entry, these are the fields that need to be completed.

NOTE

Customized logical nodes are not saved in the URS file.

Product LD inst name

Range: 1 to 64 VisibleString characters

Default: as per the following table

Each logical device has this setting. The value is fixed at "Master" in the first logical device and configurable in all others. Valid characters are upper and lowercase letters, digits, and the underscore (_) character. The first character must be a letter. The entered value sets the logical device inst name. Each logical device inst name is required to be unique within the device, and it cannot be blank. Also, if the corresponding functional ldName setting is blank, the concatenation of the IED name and the logical device inst name must form an LDName that is unique within the network for proper operation. It is recommended that the length of the IED NAME plus the length of this setting be not greater than 64 to respect the requirements of IEC 61850 7 2:2010 22.2 for LDName.

The factory default configuration is for six logical devices with Product LD inst name settings and logical node assignments as described above in the Logical devices section.

Functional ldName

Range: 0 to 64 VisibleString characters

Default: empty string

Each logical device has this setting. The value is configurable in all logical devices. Valid characters are upper and lowercase letters, digits, and the underscore (_) character. If the number of characters entered is greater than zero, the setting sets the value of the function-related name used in communications. If an ldName is entered, it must form an LDName that is unique within the network for proper operation. The standard recommends choosing this name according to IEC 81346-1. If the number of characters entered is zero, no function-related name is defined.

NOTE

Throughout the remainder of this IEC 61850 section, <LDName> is a syntactic variable representing the present LDName of the master logical device. In other contexts, LDName can refer to some other logical device. Depending on its context, <LDName> can be a product-related name or a function-related name.

configRev

Range: 0 to 255 ASCII characters

Default:

This data attribute is provided by the protocol to declare changes to the semantic of the data model of the UR. The intent is that the user changes Master configRev each time that the semantic or data model changes, so that clients can readily detect the change. A semantic change is a logical node getting a new semantic use; for example, an instance of logical node CSWI is now serving a different physical switch, or an instance of a logical node PDIS is now used for another zone. A data model change is a change in the presence of logical nodes, data objects, data attributes, or instance names.

The scope of Maser configRev is the entire relay configuration, as the Master logical device is the root logical device. Similar settings are provided for the other logical nodes; the scope of these other configRev settings is limited to the corresponding logical device configuration.

paramRev

Range: -2,147,483,648 to 2,147,483,647

Default: 0

The configurable data attribute paramRev has a scope that includes the entire device, and thus is modified whenever any setting in the device changes. The UR increments the value of paramRev by one whenever one or multiple setting changes occurs in one Modbus write request by any means (front panel, Modbus, or MMS) other than by SCL file download. Incrementing occurs whether or not the setting is represented in the information model. When a UR device or EnerVista UR Setup accepts an SCL file, paramRev is set to the value in that SCL file. When EnerVista UR Setup changes one or more settings, and prepares an SCL file, it increments paramRev to the next higher multiple of 10 000.

NOTE

Each logical device has a name: LDName. (Note the upper-case LD.) LDName has both a product-related form and a function-related form as per IEC 61850 6:2009 8.5.3.

SCL files invariably use the product-related form of LDName. The product-related form is the concatenation of the IED name of the device and the individual logical device's inst name. The IED name is the value of the "IED NAME" setting on the Server Configuration panel, and the logical device inst names are each the value of the corresponding "Product LD inst name" setting here. The "Product LD inst name" of the first logical device is fixed at "Master."

Communications use the function-related form of LDName if a function-related name is defined, otherwise communications use the product-related name. The function-related name is the value of the corresponding "Functional ldName" setting if this setting is not empty, if empty the function-related name is not defined.

In SCL, the function-related name is specified by the LDevice element attribute ldName (note the lower case ld). Absence of this attribute indicates the function-related name is not defined. In SCL the product-related name is specified by the name attribute of the IED element and the inst attribute of the LDevice element.

In the right pane, logical nodes assigned permanently to the Master logical device and LLN0 in all logical devices are grayed-out as shown earlier. These are not movable. Any other logical node can be dragged to any of the logical devices in the middle pane, which causes that logical device to be re-assigned to that logical device. Right-clicking a logical node device displays a menu that lists the logical devices that this logical node can be moved to. Clicking one of these re-assigns the logical node. Other common keyboard and/or mouse action can be used to select one or more logical nodes and move the selected nodes together.

Figure 5-26: Move logical node (Edition 2)

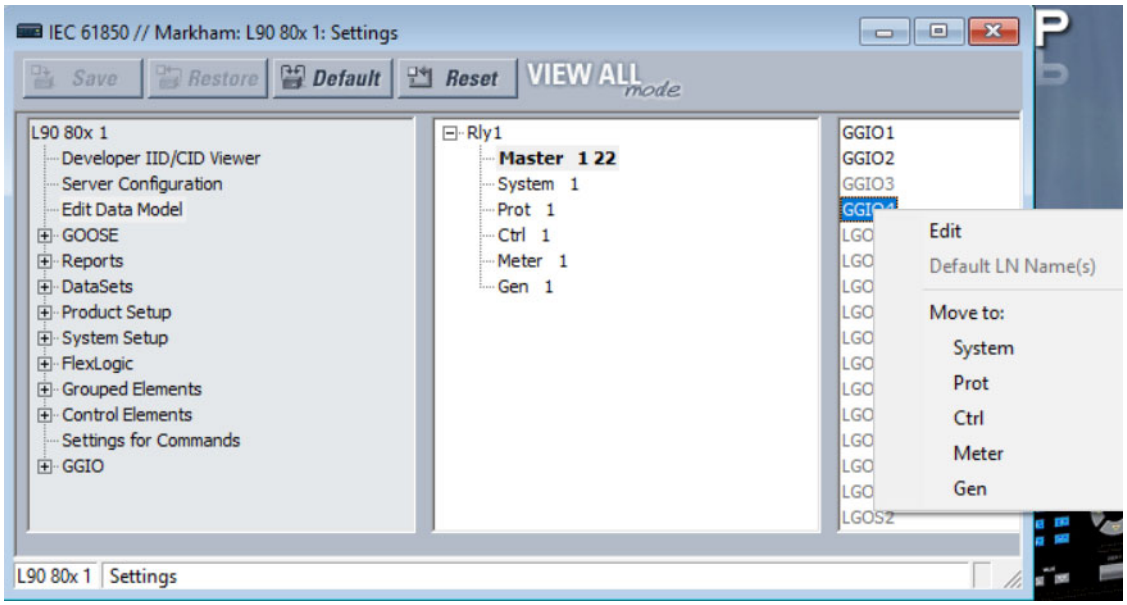

GOOSE

GOOSE, Routable GOOSE, and Process Bus GOOSE are supported, depending on hardware and software options.

The path is **Settings > Product Setup > Communications > IEC 61850 > GOOSE**.

Support for Routable GOOSE

Unsecured Routable GOOSE (R-GOOSE) is supported in firmware release 7.4 and later for IEC 61850 Edition 2. Routable GOOSE allows relays and other devices to be located in separate networks. Encryption/decryption of messages can be performed by a separate gateway device. Messages are routed using a separate router.

Note that R-GOOSE messages effectively contain GOOSE messages, but with the addition of a further communication layer for UDP and IP. This additional encoding makes R-GOOSE and GOOSE messages incompatible. It is therefore essential that UR RxGOOSE and TxGOOSE configurations are of the same type. That is, the TxGOOSE configuration of the publisher must match the RxGOOSE configuration of the subscriber(s).

NOTE

R-GOOSE is available through the IEC 61850 software option. If R-GOOSE security is required, the CyberSentry software option also is required.

The Time to Live (TTL) parameter is fixed to 64 seconds for Routable GOOSE

GOOSE and Process Bus Modules

A Process Bus Module (order code 85, 86, or 87) is supported to subscribe to sampled value (SV) messages on the process bus. GOOSE functionality is supported on the module, which allows both reception and transmission of GOOSE messages in the process bus.

GOOSE publishing (TxGOOSE) on the Process Bus Module has the following limitations:

- A maximum of two GoCBs can be assigned to Process Bus Module ports and only the fast datasets (that are prefixed with TT6) can be assigned to the Process Bus Module GOOSE messages
- A maximum of 64 data attributes can be published with two TT6 datasets on the Process Bus Module
- Publishing Routable GOOSE messages on a Process Bus Module is not supported
- Dynamic priority is not supported

GOOSE reception (RxGOOSE) on the Process Bus Module has the following limitations:

- A GOOSE message can be subscribed using main CPU or Process Bus Module, but the same message cannot be subscribed from both
- For GOOSE subscription, a functional constraint data attribute (FCDA) in a given dataset cannot be subscribed more than once
- Subscribing to Routable GOOSE messages on a Process Bus Module is not supported

On a request to save in the IEC 61850 panel in the EnerVista software, an error message displays if any of the above rules fail. When a SCL file is imported and the validation against the above rules fail, the SCL file is rejected with an appropriate error message in the software and UR SCL log.

TxGOOSE

IEC 61850 GOOSE is a method for the simultaneous high-speed delivery of generic substation event information by a publishing device to more than one subscribing device. A TxGOOSE is a UR element implementing a single IEC 61850 GOOSE message publishing service, controlled by a GOOSE control block (gcb). The subscribing function in URs is performed by RxGOOSE elements. Each UR with an IEC 61850 order code option has 16 TxGOOSE elements with associated control blocks. Each TxGOOSE can either use the original format specified in IEC 61850 8 1:2011 or the routable GOOSE (R-GOOSE; IEC 61850 Edition 2) format specified in IEC TR 61850-90-5:2012. Each TxGOOSE uses an IEC 61850 dataset to determine the data that will be published.

Published TxGOOSE messages configured in the EnerVista UR Setup software can be subscribed by and the published data values understood by other UR devices. Furthermore, they can be subscribed to and understood by any device of any manufacturer that implements the IEC 61850 Edition 1 or 2 GOOSE subscription mechanism. The messages are published with a multicast address so that the network sends the messages to all devices; any number of devices that want to subscribe can.

For wide-area protection, control, and monitoring schemes, R-GOOSE wraps the original format GOOSE in IP/UDP to multicast (or unicast) the data over a Wide Area Network (WAN). Sample applications are Wide area Remedial Action Scheme (RAS) and Under Voltage / Frequency Load Shedding Schemes (UVLS/UFLS). R GOOSE uses IGMPv3 (Internet Group Management Protocol version-3, RFC 3376) for multicasting.

The IEC data values that are published in GOOSE messages are known as members. The members are itemized in an ordered list known as a data set. Each TxGOOSE can use any one of the configured data sets. (See the DataSets section later for details.) The performance of a TxGOOSE is determined by its dataset. Booleans in fast GOOSE datasets are designed for the TT6 transfer time class (3 ms), while Booleans in the slow datasets are designed for the TT3 class (100 ms). Due to the significant amount of CPU time required to compose a TT6 TxGOOSE message and the limited amount of time allowed by the TT6 class, at most four of these can be configured in a given UR. So only four fast GOOSE are allowed to be configured, and the UR software has a check to disallow the use of more than four fast datasets in GOOSE. If six fast datasets are configured outside of UR software and the file sent directly to the relay, the relay rejects the file. The design does allow six fast datasets to be used in report control blocks, which allows fast scanned data in reports.

Each enabled TxGOOSE transmits its message whenever a value change is detected in one or more of its members. If the changed value is a Boolean in a fast dataset, then the change detection occurs in the TT6 detection time of 3 ms or less. If the member is an analog value in a fast dataset, the change detection occurs in the TT3 time of 100 ms. In slow GOOSE Datasets, change detection for all dataset members occurs in the TT3 time of 100 ms. To guard against the possibility that such a message is lost in the network before it reaches all subscribers, the message is retransmitted quickly several times. To allow subscribers to verify that their link to the publisher and the publisher itself are healthy, each message is also

retransmitted periodically even while the values are unchanging. These latter messages are known as heartbeat messages, while the former are known as event messages. Heartbeat messages also enable a subscriber newly online to receive the published values in the absence of an event.

The details of TxGOOSE message construction are contained in the UR Family Communications Guide. Knowledge of these details is not required to configure GOOSE.

The UR does not implement the fixed-length encoded GOOSE messages option specified in IEC 61850-8-1:2011 clause A.3; the UR always uses the ASN.1 Basic Encoding Rules (specified in ISO/IEC 8825-1) as specified in IEC 61850 Edition 1.0 and optional in IEC 61850 Edition 2.

Navigate to **Settings > Product Setup > Communications > IEC 61850 > GOOSE > TxGOOSE > TxGOOSE1** to access the settings for the first TxGOOSE. The settings and functionality for the other entries are similar.

Figure 5-27: IEC 61850 TxGOOSE panel (Edition 2 and with Process Bus Module)

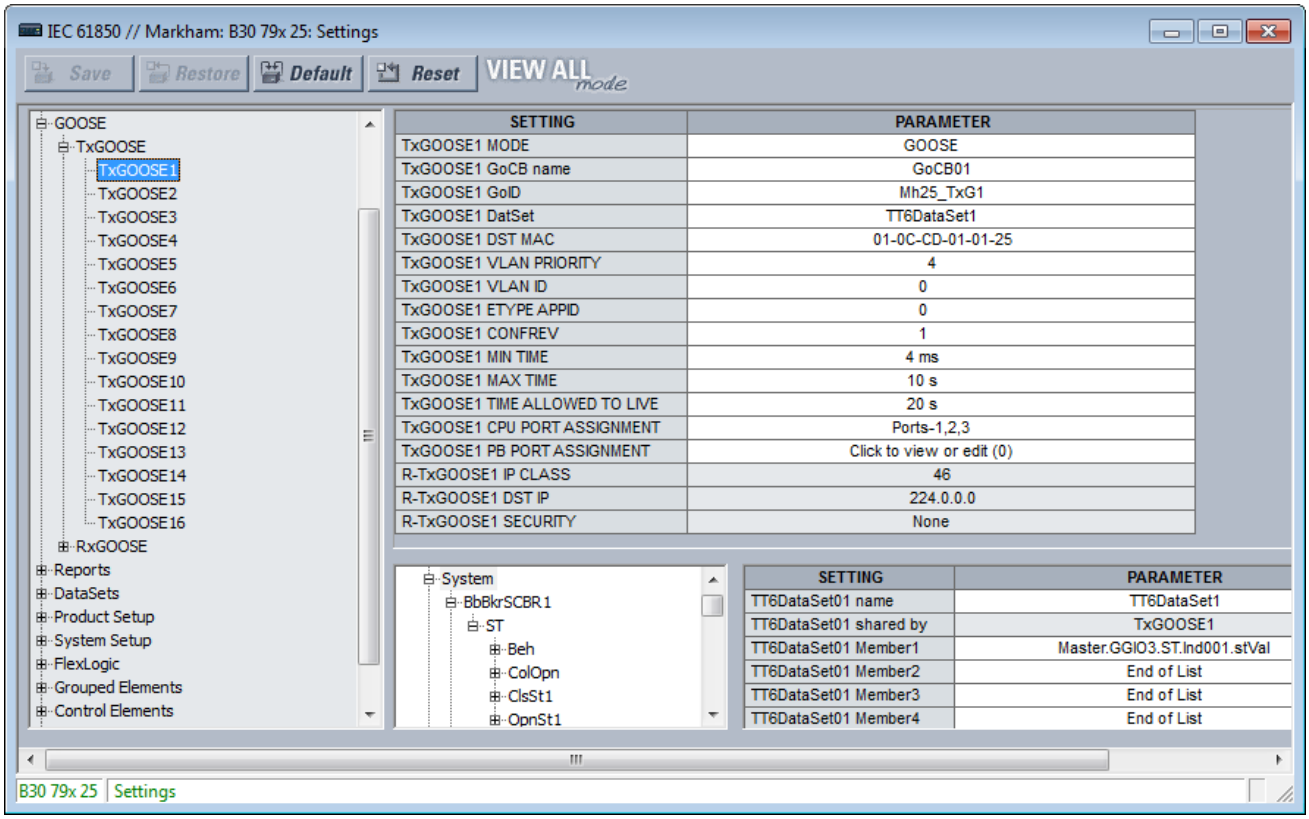

A data set needs to be set up and selected in the **TxGOOSEx DataSet** field for all content to display.

When saving changes, when a "dataset member is empty" message displays, you need to set the member in the bottom right of the window.

TxGOOSE1 MODE

Range for Edition 2: Disabled, GOOSE, R-GOOSE
Range for Edition 1: Disabled, GOOSE
Default: Disabled

When set to Disabled, TxGOOSE1 messages are not published. When set to GOOSE, TxGOOSE1 messages are published in IEC 61850 8 1:2011 GOOSE format. When set to R-GOOSE, TxGOOSE1 messages are published in Routable GOOSE format according to IEC 61850 90-5, and the **TxGOOSE1 DST MAC** address is set to 00 00 00 00 00 00 and cannot be changed. The actual destination MAC address used for R-GOOSE transmission is derived from the configured multicast IP address.

TxGOOSE1 GoCB name

Range: 0 up to 32 VisibleString characters
Default: GoCB01

The entered value sets the GOOSE control block (GoCB) name value for TxGOOSE1.

An ObjectReference to the control block, which consists of the concatenation of the string "<LDName>/LLN0." and the control block name, is published in the gocbRef field of TxGOOSE1 messages and is used by subscribers to discriminate TxGOOSE1 messages from other GOOSE messages. <LDName> is a syntactic variable that is set to the value of setting Master functional ldName if one or more characters have been entered to that setting, otherwise the value of setting IED NAME suffixed with "Master".

TxGOOSE1 GoID

Range for Edition 2: 0 to 129 VisibleString characters
Range for Edition 1: 0 to 65 VisibleString characters
Default: TxGOOSE1

The entered value sets the goID value published in TxGOOSE1 messages, and can be used by subscribers to discriminate the TxGOOSE1 messages from other GOOSE messages. Special characters are not allowed, such as <, >, &, ', and ".

TxGOOSE1 DatSet

Range: None, TT6DataSet1,TT6 DataSet2, ... TT3DataSet01,TT3 DataSet02, ...
Default: None

This setting selects the published data set using the UR Setup software designator for the data set. If None is selected, no TxGOOSE1 messages are sent.

The IEC 61850 name of the data sets are configured in the Datasets panel, as described later.

Some datasets are designed for the TT6 transfer time class (3 ms), while others are designed for the TT3 class (100 ms). The performance of a TxGOOSE is determined by its dataset. Use TT6 datasets for trips and blocking applications, TT3 datasets for slow automatic interactions. The IEC 61850 name of the datasets are configured in the Datasets panel.

An ObjectReference to the data set, which consists of the concatenation of the string "<LDName>/LLN0." and the data set name, is published in the datSet field of TxGOOSE1 messages and can be used by subscribers to discriminate TxGOOSE1 messages from other GOOSE messages. <LDName> is a syntactic variable that is set to the value of setting Master functional ldName if one or more characters have been entered to that setting, otherwise the value of setting IED NAME suffixed with "Master".

To configure a DataSet, select it at the top of the window from the drop-down list. In the lower part of the window, drag and drop configuration items to the right side. Dataset members configured here affect other Report or TxGOOSE control blocks that use the same DataSet.

The performance of the TxGOOSE is determined by the performance of the selected dataset. When the selection is TT3DataSet01, TT3DataSet02, ... it is possible that transient events can be missed.

TxGOOSE1 DST MAC

Range: any 12 digit hexadecimal number
*Default: 01-0C-CD-01-00-00 when **TxGOOSE1 MODE** is set to GOOSE, 00-00-00-00-00-00 when **TxGOOSE1 MODE** is set to R-GOOSE*

When the **TxGOOSE1 MODE** is set to R-GOOSE, the value of this setting is not used. If **R-TxGOOSE1 DST IP** is set to multicast, the destination MAC address is derived from the configured multicast IP address. If **R-TxGOOSE1 DST IP** is set to unicast IP, the UR resolves the destination MAC address using the ARP protocol. If **R-TxGOOSE1 DST IP** is in the range of any of the configured static routes (first usable static route), the UR uses the gateway IP of that static route for resolving the destination MAC. Otherwise, the UR uses the default gateway. The same is repeated on all the configured ports of the **TxGOOSE1 CPU PORT ASSIGNMENT** setting.

When the **TxGOOSE1 MODE** setting is GOOSE, the value entered here sets the Ethernet destination MAC address in published TxGOOSE1 messages. As the standard requires that the address have the multicast bit set TRUE, that is to say the second digit is set to an odd number, messages transmitted have the multicast bit set TRUE no matter its value in this setting.

The destination MAC address can be used by the network to restrict message delivery to selected devices that need to receive them, reducing network load. This address also can be used by hardware in receiving devices to filter out messages that are of no interest to them, reducing processor burden. Different filtering algorithms are implemented by different devices. The standard recommends that the algorithm used by hardware of the receiving device be considered when assigning destination multicast addresses.

Subscribers can use this address to discriminate TxGOOSE1 messages from other GOOSE messages.

The UR supports R-GOOSE messages configured with a unicast destination IP address. This is a non-standard extension to IEC 61850. In this configuration the UR needs to determine the appropriate destination MAC address to use. This is done in the following manner. After relay startup, ARP requests are sent to the gateway address (approximately within 30 seconds after relay startup). When the ARP response is received, the ARP table is updated, and the unicast R-GOOSE messages are published with the resolved MAC address. Every 20 minutes, the UR flushes the ARP table and rebuilds the ARP table by sending the ARP requests.

- If the gateway router is offline, the UR retransmits the ARP requests at one second intervals for 10 seconds, and the same sequence is repeated at approximately six minutes until the ARP response is received
- When the network link is disconnected, at the connection, the UR transmits the ARP messages to rebuild the ARP table and when the ARP table is updated, the UR publishes the unicast messages. The recovery time could be up to five minutes for publishing the unicast messages.
- Whenever there is a change in static route configuration, the UR transmits the ARP requests to the new gateway address approximately 70 seconds after the static route configuration change.

The resolved MAC addresses are displayed in the UR web page.

When using a Process Bus Module (order code 85, 86, or 87) and configuring multiple TxGOOSE to publish, ensure that the MAC addresses differ. When the MAC addresses are the same, a message displays to change them, for example "TxGOOSE1 & TxGOOSE2 assigned to PBM have the same DstMAC address. Unique DstMAC addresses are required between the TxGOOSE for 'PB Port Assignment' to work correctly."

TxGOOSE1 VLAN PRIORITY

Range: 0, 1, 2, 3, 4, 5, 6, 7, 5-4, 6-4, 6-5, 7-4, 7-5, 7-6

Default: 4

When the value entered is 0, 1, 2, 3, 4, 5, 6, or 7, the User Priority value in the IEEE 802.1Q VLAN tag included in published TxGOOSE1 messages is set to that value. When one of the two-digit values is entered, the dynamic priority feature is selected: the first event message has the User Priority value of the first digit, and User Priority is decremented in each following message until reaching the value of the second digit. For instance, if the selected value is 7-5, then the User Priority values in successive messages beginning with the message triggered by an event is 7, 6, 5, 5, 5, 5, 5, and so on. Do not make a dynamic priority selection when standard behavior is required.

Network devices can forward a message with a higher priority value before a message with a lower priority value, which speeds delivery of high-priority messages in heavily loaded networks. The standard recommends that higher-priority messages, such as GOOSE, have priority values in the range of 4 to 7.

TxGOOSE1 VLAN ID

Range: 0 to 4095 in steps of 1

Default: 0

The value entered sets the VID value in the IEEE 802.1Q VLAN tag included in published TxGOOSE1 messages. VID can be used by network devices to direct messages to only selected devices, reducing network burden. VID values of 0 and 1 are assigned by IEEE 802.1Q to other functions and are not to be used for GOOSE.

TxGOOSE1 ETYPE APPID

Range: 0 to 65535 in steps of 1

Default: 0

The value entered sets the APPID value in published GOOSE messages and can be used by subscribers to discriminate TxGOOSE1 messages from other GOOSE messages.

The standard reserves the value range 0 to 16383 for GOOSE Type 1 (Fast messages), and reserves the value range 32768 to 41151 for GOOSE Type 1A (Trip messages). Some subscribers can process messages in the Type 1A range faster than messages in the Type 1 range. The standard reserves the default value (0) to indicate lack of configuration. The standard strongly recommends unique, source-orientated APPIDs within a given system.

TxGOOSE1 CONFREV

Range: 0 to 4294967295 in steps of 1

Default: 1

The entered value sets the confRev value in published GOOSE messages and can be used by subscribers to discriminate TxGOOSE messages of the expected configuration revision from messages of a different revision. The standard requires that CONFREV be incremented each time the members or the order of the members published is changed. The standard states that the value of 0 is reserved.

TxGOOSE1 MIN TIME

Range: 0 to 100 ms in steps of 1 ms

Default: 4 ms

If the entered time is non-zero, when a member value change is detected, four event transmissions are sent, then heartbeat transmissions resume. The interval between the first and second event transmissions, and between the second and third, is the time set here. The interval between the third and the fourth event transmission is double the set time. If the entered time is zero, only a single event transmission occurs, then heartbeat transmissions resume.

TxGOOSE1 MAX TIME

Range: 1 to 59 s in steps of 1 s

Default: 10 s

This setting specifies the time interval between heartbeat messages, meaning messages that are sent periodically while no events are detected.

TxGOOSE1 TIME ALLOWED TO LIVE

Range: 1 to 60 s in steps of 1 s

Default: 20 s

The value entered sets the timeAllowedtoLive value in published TxGOOSE1 messages. The standard requires subscribers to assume a failure has occurred when another TxGOOSE1 message is not received within the published timeAllowedtoLive time.

Base this setting on the **TxGOOSE MAX TIME** and the tolerable number of contiguous message delivery misses. For example, if the heartbeat time is 10 s, and missing up to three successive messages is tolerable, make the setting 10 * 3 + 1 = 31 s. The extra second is to ensure that arrival of the third heartbeat transmission beats the timeAllowedtoLive timer.

In the imported CID file, if the **TxGOOSE1 TIME ALLOWED TO LIVE** is greater than 60 seconds, the setting value is clamped to 60 seconds and an information log is provided in the SCL log file.

TxGOOSE1 CPU PORT ASSIGNMENT

Range: Disabled, Port-1; Port-2; Port-3; Ports-1,2; Ports-2,3; Ports-1,3; Ports-1,2,3

Default: Ports-1,2,3

This setting applies to IEC 61850 Edition 2.

This setting specifies the Ethernet ports for transmission of TxGOOSE1. When set to disabled, TxGOOSE1 messages are not transmitted on any port no matter the state of GoEna. When set to Port-1, TxGOOSE1 is published over Ethernet Port-1 only; while selecting Ports-1, 3 option, the same TxGOOSE1 is published to both Ports 1 and 3; and similarly, if set to Ports-1, 2, 3, all ports publish TxGOOSE1.

NOTE

When setting **PRT2 REDUNDANCY** to Failover or to PRP, the **TxGOOSE 1 CPU PORT ASSIGNMENT** needs to be set to ports 2 and 3 (Ports-2,3).

Also, Port 3 configuration in the CID file is ignored. The Port 3 ConnectedAP elements has no meaning, as ports 2 and 3 use the port 2 MAC address, IP address, and mask.

TxGOOSE1 PB PORT ASSIGNMENT

Range: Individual ports may or may not be checked (PB Port-1...PB Port-8)

Default: None of the ports are selected

This setting displays when the order code includes a non-HardFiber Process Bus Module.

When using a UR Process Bus Module, this setting specifies the Ethernet ports on the Process Bus Module for transmission of TxGOOSE1. When none of the ports are selected, a TxGOOSE1 message is not transmitted on any port no matter the state of GoEna. When set to PB Port-1, TxGOOSE1 is published over Process Bus Module Port-1 only. Similarly, if all ports are selected (PB Port-1 to PB Port-8) all Process Bus Module ports publish TxGOOSE1.

When the TxGOOSE1 Mode is set to R-GOOSE, the setting is read-only.

A maximum of 192 data attributes (in one or more datasets) can be transmitted in all TxGOOSE messages that are configured to transmit on the Process Bus Module.

R-TxGOOSE1 IP CLASS

Range: 0 to 256 in steps of 1

Default: 46

This setting applies to IEC 61850 Edition 2.

When the **TxGOOSE1 MODE** setting is other than R-GOOSE, the value of this setting is not used. Otherwise, this setting selects the IPv4 Differentiated Services Code Point-DSCP (formerly called TypeOfService-TOS) value. This value provides priority routing, when supported in the routers. The default value is for Expedited Forwarding (101110B, 46 or 2EH).

R-TxGOOSE1 DST IP

Range: 0.0.0.0 to 255.255.255 in steps of 1

Default: 224.0.0.0

This setting applies to IEC 61850 Edition 2.

When the **TxGOOSE1 MODE** setting is other than R-GOOSE, the value of this setting is not used. Otherwise, this setting specifies destination IP address for the R-TXGOOSE1 that is entered in Standard IPV4 address format. The destination IP address needs to be a valid multicast or unicast IP address. The value specified in this setting is used as the IPv4 destination IP address for publishing R-GOOSE1.

The default IP address 224.0.0.0 is reserved, and hence not a valid multicast IP address.

The source IP address is that of the UR port from which the R-GOOSE messages are transmitted.

R-TxGOOSE1 SECURITY

Range: None, Signature, SignatureAndEncryption

Default: None

This setting applies to IEC 61850 Edition 2.

This setting specifies level of security (authentication/encryption) used for TxGOOSE1. None specifies no security mechanisms are to be used. Signature specifies only signature (no encryption) is to be used. SignatureAndEncryption specifies that both signature and encryption are to be used.

RxGOOSE

Navigate to **Settings > Product Setup > Communications > IEC 61850 > GOOSE > RxGOOSE > RxGOOSE Messages**.

GOOSE is an efficient method for simultaneous high-speed delivery of generic substation event information by a publishing device to more than one subscribing device. An RxGOOSE is a UR element implementing a single IEC 61850 GOOSE message subscribing service. The publishing function in URs is performed by TxGOOSE elements, as described in the previous section.

Each UR with an IEC 61850 order code option has 64 RxGOOSE elements. Each RxGOOSE element can subscribe to GOOSE messages from a specified publisher. Each RxGOOSE can either use the original format specified in IEC 61850-811:2011 or the routable GOOSE (R-GOOSE; IEC 61850 Edition 2) format specified in IEC TR 61850-90-5:2012. Subscribed message members can be DataObjects, SubDataObjects, DataAttributes, or SubAttributes. In E2-2.0 mode, members are restricted to basic types BOOLEAN, FLOAT32, INT32, Dbpos, TimeStamp, or Quality. Each subscribed message can contain up to 256 values. A member can be a structure containing several values; note that it is the number of values rather than the number of members that are limited to 256.

GOOSE messages from any device of any manufacturer that implements the IEC 61850 Edition 1 or 2 GOOSE publish service, or the IEC 61850-90-5 R-GOOSE service (IEC 61850 Edition 2) can be subscribed to. The UR accepts both the variable-length encoded GOOSE messages specified in IEC 61850 8 1:2004 and the fixed-length encoded GOOSE messages as specified in IEC 61850 8 1:2011 clause A.3.

Each enabled RxGOOSE monitors for interruption of the GOOSE messages it subscribes to based on the value in the timeAllowedtoLive field of the last message received. If a new message is not received within that time interval, the RxGOOSE assumes that connectivity is lost. FlexLogic operands (for example RxGOOSE1 On, RxGOOSE1 Off) reflect the status of each RxGOOSE connectivity. An RxGOOSE connection is also considered lost after the UR finishes restart until a message is received. While any RxGOOSE connectivity is lost, a common RxGOOSE Fail self-test is activated.

Messages that contain the value true in the ndsCom field are never accepted. Messages that contain the value true in the simulation field are accepted only when the B30 LPHD1.Sim.stVal is true (simulation mode is enabled)..

RxGOOSE messages can be received through a UR CPU module Ethernet port or a UR Process Bus Module Ethernet port. A maximum of 24 RxGOOSE messages can be received from the Process Bus Module.

Navigate to **Settings > Product Setup > Communications > IEC 61850 > GOOSE > RxGOOSE > RxGOOSE Messages > RxGOOSE1** to access the settings that specify the messages to be accepted by the first RxGOOSE element. The settings and functionality for the other RxGOOSE are similar. The following settings are available. They allow RxGOOSE1 to recognize the GOOSE messages to accept. Most of these settings are configured automatically by the EnerVista UR Setup software when an association to an RxGOOSE Boolean Input, RxGOOSE DPS Input, and/or RxGOOSE Analog Input is made as described in the following sections. For IEC 61850 Edition 2, settings **R-RxGOOSE1 RECEPTION MODE**, **R-RxGOOSE1 SECURITY**, and **R-RxGOOSE SRC IP** need to be completed manually as the information is not contained in publisher SCL. Read-only settings are grey.

Figure 5-28: IEC 61850 RxGOOSE Messages panel (Edition 2)

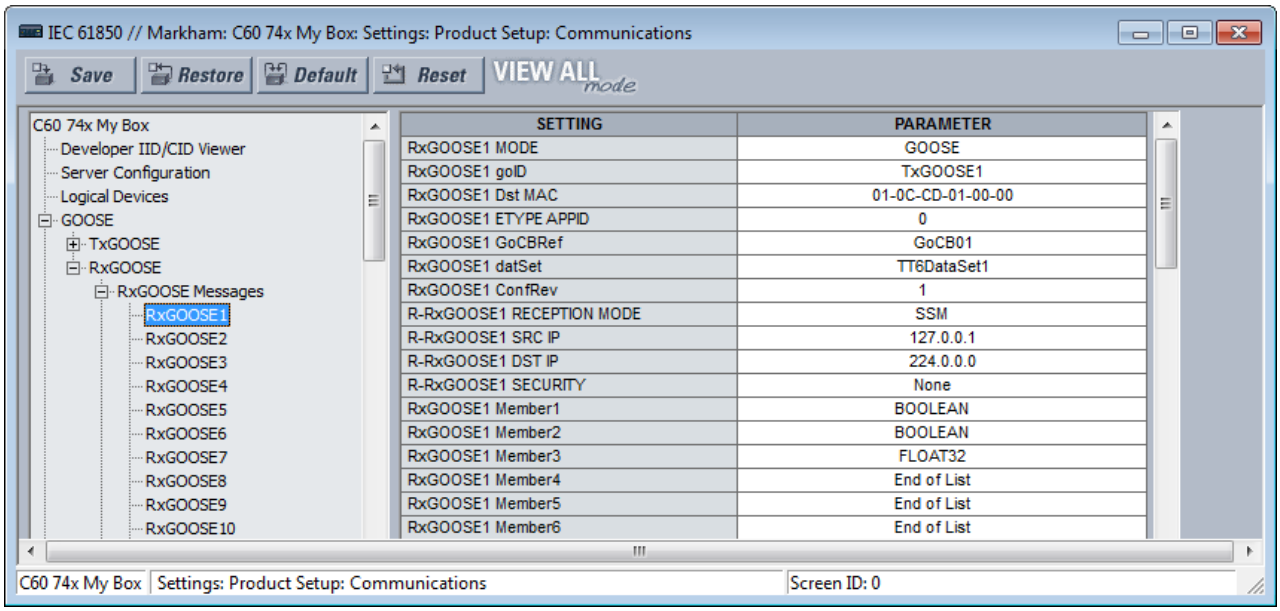

RxGOOSE1 MODE

For Ed2: Main CPU GOOSE, Main CPU R-GOOSE, Process Bus Module GOOSE

For Ed1: GOOSE

Default: Main CPU GOOSE

When set to "Main CPU GOOSE," the relay subscribes to RxGOOSE1 messages if received on any of the three main CPU ports and if they comply with IEC 61850-8-1:2011 GOOSE format.

When set to "Main CPU R-GOOSE," the relay subscribes to RxGOOSE1 messages if received on any of the three main CPU ports and if they comply with the R-GOOSE format according to IEC 61850-90-5.

When set to "Process Bus Module GOOSE," the relay subscribes to RxGOOSE1 messages if received on any of the eight UR Process Bus Module ports and if they comply with IEC 61850-8-1:2011 GOOSE format.

RxGOOSE1 goID

Range: 0 to 129 VisibleString characters

Default: empty string

If the entered value has one or more characters, the goID field of incoming GOOSE messages must exactly match this value for the message to be accepted as a valid RxGOOSE1 message. If the entered value is the empty string, RxGOOSE1 does not check the value received in the goID field. Special characters are not allowed, such as <, >, &, ', and ".

This setting needs match the value of the publisher's **TxGOOSE GoID** setting.

RxGOOSE1 Dst MAC

Range: any 12 digit hexadecimal number

Default: 01-0C-CD-01-00-00

When the **RxGOOSE1 MODE** setting is R-GOOSE, the value of this setting is not used, the destination Media Access Control (MAC) address for RxGOOSE1 messages is calculated based on the **RxGOOSE DST IP** address. Otherwise, set this setting to the MAC address of the publisher. Only received GOOSE messages having a MAC address equal to this value are accepted as valid RxGOOSE1 messages. An entered address of zero disables RxGOOSE1.

The setting needs to match the value of the publisher's **TxGOOSE DST MAC** setting.

RxGOOSE1 ETYPE APPID

Range: 0 to 65535 in steps of 1

Default: 0

If the value entered is non-zero, the APPID field of incoming GOOSE messages must exactly match this value for the message to be accepted as a valid RxGOOSE1 message. If the value entered is zero, RxGOOSE1 does not check the value received in the APPID field.

The setting needs to match the value of the publisher's **TxGOOSE ETYPE APPID** setting.

5

RxGOOSE1 GoCBRef

Range: 0 to 129 alphanumeric, underscore, slash, and period characters, beginning with an alpha character

The gocbRef field of incoming GOOSE messages must match this value for the message to be accepted as a valid RxGOOSE1 message. If the entered value is the empty string, RxGOOSE1 is disabled. If not the empty string, the entry needs to be an ACSI ObjectReference to the publishing control block in the format:

<LDName>/LLN0.<GoCBName>

where <LDName> is the function-related name if the logical device containing the publishing control block has "ldName" configured, otherwise the product-related name of that logical device, and <GoCBName> is the name of the publishing control block.

The N60 translates the ACSI format required for this setting to the MMS format used in GOOSE messages:

<LDName>/LLN0GO<GoCBName>

If the publisher is a UR 7.3x series or later device, <LDName> is the value of the publisher's Master functional ldName setting if that setting is not empty, otherwise it is the value of the publisher's IED NAME suffixed with "Master". If the publisher is a UR 7.3x series device, <GoCBName> is "GoCB" suffixed with the two digit TxGOOSE instance number, for example "GoCB01". If the publisher is a UR 7.4 series or later device, <GoCBName> is as specified earlier in the TxGOOSE section of this chapter.

RxGOOSE1 datSet

Range: 0 to 32 alphanumeric and underscore characters, beginning with an alpha character

Default: empty string

If the entered value has one or more characters, the datSet field of incoming GOOSE messages must exactly match this value prefixed by <LDName>/LLN0$ for the message to be accepted as a valid RxGOOSE1 message. <LDName> is as specified in the RxGOOSE GoCBRef setting above. If the entered value is the empty string, RxGOOSE1 does not check the value received in the datSet field.

If the publisher is a UR 7.3x series device, set this setting to the value of the publisher's DataSetxx name setting, where xx is the instance number of the data set selected by the publisher's **TxGOOSE datSet** setting. If the publisher is a UR 7.40 series or later device, datSet is as specified in the DataSets section of this chapter.

RxGOOSE1 ConfRev

Range: 0 to 4294967295 in steps of 1
Default: 1

If the value entered is non-zero, the confRev field of incoming GOOSE messages must exactly match this value for the message to be accepted as a valid RxGOOSE1 message. If the entered value is zero, RxGOOSE1 does not check the value received in the confRev field.

Set this setting to match the value of the publisher's **TxGOOSE ConfRev** setting.

R-RxGOOSE1 RECEPTION MODE

Range: SSM, ASM, Unicast
Default: SSM

This setting applies to IEC 61850 Edition 2.

When the **RxGOOSE1 MODE** setting is other than R-GOOSE the value of this setting is not used. Otherwise it selects the R-GOOSE reception mode.

R-RxGOOSE RECEPTION MODE specifies the **R-RxGOOSE DST IP** range. When set to SSM, **R-RxGOOSE DST IP** must be in the range of 232.0.0.1 to 232.255.255.255. When set to ASM, **R-RxGOOSE DST IP** must be in the range of 224.0.0.1 to 239.255.255.255, excluding the SSM range. Note that the SSM range is inside the ASM range and therefore the ASM use excludes the SSM range. The default destination IP address 224.0.0.0 is reserved, and hence not a valid multicast IP address.

The reception modes are related to Layer-3 R-GOOSE reception from routers/WAN. The subscription to multicasting of R-GOOSE is supported using IGMP Protocol Independent Multicast (PIM). It is made available in either Source Specific Multicast (SSM) mode or Any Source Multicast (ASM) mode. Unicast (over UDP) mode can also be used. In case of multicasting (IGMPv3 based SSM or ASM), the R-GOOSE subscriber device requests the Last Hop Router (LHR) to subscribe to a specific multicasting group.

If the publisher is using a unicast destination IP address for this R-GOOSE, then set **R-RxGOOSE1 RECEPTION MODE** to Unicast. Otherwise set **R-RxGOOSE1 RECEPTION MODE** to the SSM or ASM mode used by the local routers/firewalls.

5

NOTE

When the **R-RxGOOSE1 RECEPTION MODE** is set to SSM or ASM, the N60 sends the IGMP join group report (source specific in case of SSM) every 60 seconds and responds to IGMP general queries issued by the router.

R-RxGOOSE1 SRC IP

Range: 0.0.0.0 to 255.255.255 in steps of 1
Default: 127.0.0.1

This setting applies to IEC 61850 Edition 2.

When the **RxGOOSE1 MODE** setting is other than R-GOOSE, the value of this setting is not used. When the **RxGOOSE1 MODE** setting is R-GOOSE and the **R-RxGOOSE RECEPTION MODE** setting is ASM, the value of this setting is not used. Otherwise the Source IP Address field of incoming R-GOOSE messages must exactly match this value for the message to be accepted as a valid RxGOOSE1 message. Set this setting to the value of the source IP address used by the publisher. For UR publishers, this value is in setting PRT# IP ADDRESS.

The UR does not validate the address entered. The default IP address 127.0.0.1 is a reserved, not a valid IP address. Enter a valid IP source address.

R-RxGOOSE1 DST IP

Range: 0.0.0.0 to 255.255.255 in steps of 1
Default: 224.0.0.0

This setting applies to IEC 61850 Edition 2.

When the **RxGOOSE1 MODE** setting is other than R-GOOSE, the value of this setting is not used. Otherwise the Destination IP Address field of incoming R GOOSE messages must exactly match this value for the message to be accepted as a valid RxGOOSE1 message. Set this setting to the same value as the R-GOOSE publisher's Destination IP Address. For UR publishers, this value is in setting R-TxGOOSE# DST IP.

The destination IP address needs to be a valid multicast or unicast IP address. The UR does not validate the address entered. The default IP address 224.0.0.0 is reserved, and hence not a valid multicast IP address.

R-RxGOOSE1 SECURITY

Range: None, Signature, SignatureAndEncryption
Default: None

This setting applies to IEC 61850 Edition 2.

This setting specifies the level of security (authentication/encryption) used for RxGOOSE1. None indicates no security mechanisms are in use. Signature indicates only signature (no encryption) is in use. SignatureAndEncryption indicates that both signature and encryption are in use. Normally this setting is set to match the GOOSE publisher's security method.

RxGOOSE1 Member 1

Range: End of List, BOOLEAN, INT8U, INT16U, INT32U, FLOAT32, INT32, Dbpos (DPS), Quality, TimeStamp, ENUM, STRUCT
Default: End of List

This setting specifies the type that the first member of incoming GOOSE messages must be for the message to be accepted as a valid RxGOOSE1 message. There are similar settings for each of the up to 64 members that the UR is able to subscribe to in a given GOOSE message. The member before the first member setting set to "End of List" must be the last member of the message for the message to be accepted as a valid RxGOOSE1 message.

If the publisher is a UR 7.3x series or later, set these settings to match the basic type of the members of the publisher's data set selected by the publisher's **TxGOOSE datSet** setting.

If the publisher dataset includes members with structured data, that is, data attributes, sub-data objects, and/or data attributes with sub-data attributes, configuration must use one of the UR Setup RxGOOSE Inputs pages. In this case the Member setting displays as the product-related name used by the publishing IED of the data object or data attribute, in standard SCSM format (e.g. Publisher1LD1/LLN0STOff$stVal).

Note that a dataset can hold at most 256 basic data attribute values, and that a single structured data object or attribute can contain multiple basic data attribute values. UR Setup software does not allow more than 256 basic data attribute values to be entered, in which case the last several members settings cannot be changed from End of List.

Note that the publisher's name alone does not contain all the information required for subscription, additional publisher information model information is stored elsewhere. For this reason, manual entry of the name is not supported.

NOTE

When this setting is configured manually, "Struct" and "Enum" are not allowed for selection. However, those two values are placeholders in the software, when the **RxGOOSE1 Members** are configured using the ADD IED (via publisher SCL file) option in the RxGOOSE Boolean/DPS/Analog Inputs screen.

RxGOOSE inputs

The values received by RxGOOSE elements need to be converted to FlexLogic or FlexAnalog operands so that they can be used by other UR elements. This conversion is done by RxGOOSE Boolean, RxGOOSE DPS, and RxGOOSE Analog elements. Each RxGOOSE Boolean can convert the value of a specified Boolean value received by a specified RxGOOSE to a FlexLogic operand. Each RxGOOSE DPS can convert the value of a specified Dbpos (Double bit position) value to four FlexLogic operands, one for each of the four possible Dbpos states. Each RxGOOSE Analog can convert the value of a specified FLOAT32, INT8U, INT16U, INT32U, INT32 and ENUM value to a FlexAnalog operand. Each of these operands reverts to its default state when the RxGOOSE connectivity is lost. Other types of values can be present in subscribed GOOSE messages but cannot be converted to operands.

When an RxGOOSE Input is mapped to a value in the GOOSE message, the associated q value is validated, if the q value is included in that GOOSE message as part of the data object or if it is part of the same dataset. For such automatic mapping, the index of associated quality value can be seen in the RxGOOSE Member field as read-only.

RxGOOSE Boolean, RxGOOSE DPS, and RxGOOSE Analog elements are mapped to various data objects in <iedName>Master/GGIO3. This allows reading of their values via MMS and allows references to them in SCL files. GGIO3 has no settings, nor is it visible in the EnerVista UR Setup software. See the UR Family Communications Guide for more information on GGIO3.

For each configured RxGOOSE Input, the UR monitors the associated quality attribute if available. An RxGOOSE Input reverts to its configured default value as follows:

- If the validity bits of the quality attribute (q.validity) are invalid
- If the validity bits of the quality attribute are questionable
- If the test bit of the quality attribute is set and **IED Mode** is other than Test or Test-Blocked

When the **IED Mode** setting is Test or Test-Blocked, the q.test bit is not validated. That is, when the relay is in test or test-blocked mode, the q.test = False is treated same as q.test = True.

When an RxGOOSE Boolean/DPS/Analog Input is mapped to a remote GOOSE message input using the publisher SCL file, the UR automatically maps and monitors the associated quality member as follows:

- If the publisher dataset includes members with structured data
- If the publisher dataset includes data attributes and associated quality attribute is available in the same dataset (in any sequence)

If the publisher dataset member that is mapped to RxGOOSE input is structured data, the quality attribute is embedded in the same structure.

If the publisher dataset member that is mapped to RxGOOSE input is a data attribute, the UR scans the rest of the attributes in that publisher dataset for a matching quality attribute.

Set up subscriptions

Subscriptions are configured in the RxGOOSE Boolean Inputs, DPS Inputs, and Analog Inputs panels.

There are **Add IED** and **Remove IED** buttons. The **Add IED** button allows SCL files to be used, including ICD, CID, and SCD (supported in version 7.40 and later). With SCL file import, for Edition 1 the IP address in the ConnectedAP element must match one IP address of the device, while for Edition 2 one of the three IP addresses in the ConnectedAP element must match. When the file format is SCD, the system lists all IEDs inside the SCD file and lets the user select the ones to add. The figure shows a selection being made by importing a CID file using the **Add IED** function.

The "**Do NOT default Remote Input ID...**" check box applies when configuring GOOSE subscription. It determines if the **ID** field is retained or defaulted. When enabled, the **ID** is retained. When disabled, the **ID** is defaulted. For example, you change the **ID** field from "RxG Bool1" to RxG Bool1west," and the change is retained when the check box is enabled. The check box applies on drag-and-drop, manual configuration, manual deletion, deletion using the **Remove IED** button, and when clicking the **Default** button in the RxGOOSE message panel. The **Default** and **Reset** buttons in the RxGOOSE Boolean Inputs, DPS Inputs, and Analog Inputs panels default all settings in the panel, including the **ID**, regardless of the check box. The check box is available for to UR version 7.4x and later devices.

To subscribe:

1. Click the **Add IED** button and import a file.
2. Expand the entries by clicking the + box.
3. Drag-and-drop an entry into a **Subscribed to** field. The software checks for duplicates.

Most of the settings are configured by drag-and-drop. Enter manually the ID, DEFAULT STATE, and EVENTS settings when the factory default values are not acceptable.

In the example shown, all of the entries at the bottom of the screen have been added to the subscription column.

Figure 5-29: RxGOOSE subscription

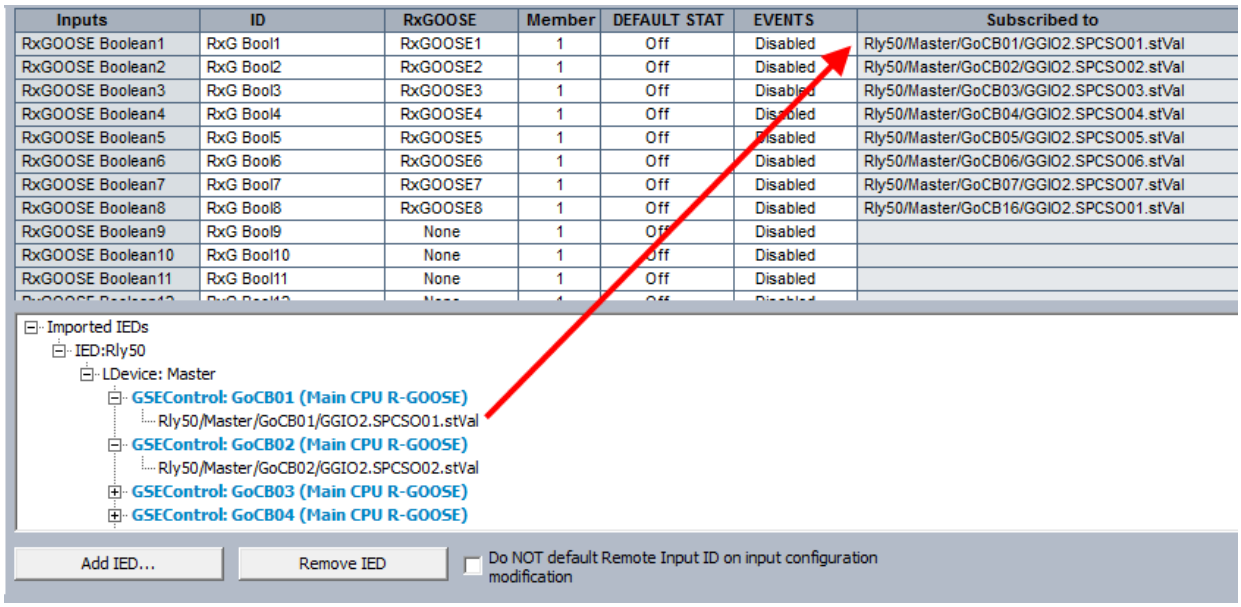

Inputs	ID	RxGOOSE	Member	DEFAULT STAT	EVENTS	Subscribed to
RxGOOSE Boolean1	RxG Bool1	RxGOOSE1	1	Off	Disabled	Rly50/Master/GoCB01/GGIO2.SPCSO01.stVal
RxGOOSE Boolean2	RxG Bool2	RxGOOSE2	1	Off	Disabled	Rly50/Master/GoCB02/GGIO2.SPCSO02.stVal
RxGOOSE Boolean3	RxG Bool3	RxGOOSE3	1	Off	Disabled	Rly50/Master/GoCB03/GGIO2.SPCSO03.stVal
RxGOOSE Boolean4	RxG Bool4	RxGOOSE4	1	Off	Disabled	Rly50/Master/GoCB04/GGIO2.SPCSO04.stVal
RxGOOSE Boolean5	RxG Bool5	RxGOOSE5	1	Off	Disabled	Rly50/Master/GoCB05/GGIO2.SPCSO05.stVal
RxGOOSE Boolean6	RxG Bool6	RxGOOSE6	1	Off	Disabled	Rly50/Master/GoCB06/GGIO2.SPCSO06.stVal
RxGOOSE Boolean7	RxG Bool7	RxGOOSE7	1	Off	Disabled	Rly50/Master/GoCB07/GGIO2.SPCSO07.stVal
RxGOOSE Boolean8	RxG Bool8	RxGOOSE8	1	Off	Disabled	Rly50/Master/GoCB16/GGIO2.SPCSO01.stVal
RxGOOSE Boolean9	RxG Bool9	None	1	Off	Disabled	
RxGOOSE Boolean10	RxG Bool10	None	1	Off	Disabled	
RxGOOSE Boolean11	RxG Bool11	None	1	Off	Disabled	

5

RxGOOSE Boolean inputs

Navigate to **Settings > Product Setup > Communications > IEC 61850 > GOOSE > RxGOOSE > RxGOOSE Boolean Inputs**.

The number of RxGOOSE Boolean (remote inputs) is 256.

Figure 5-30: RxGOOSE Boolean Input panel (Edition 2)

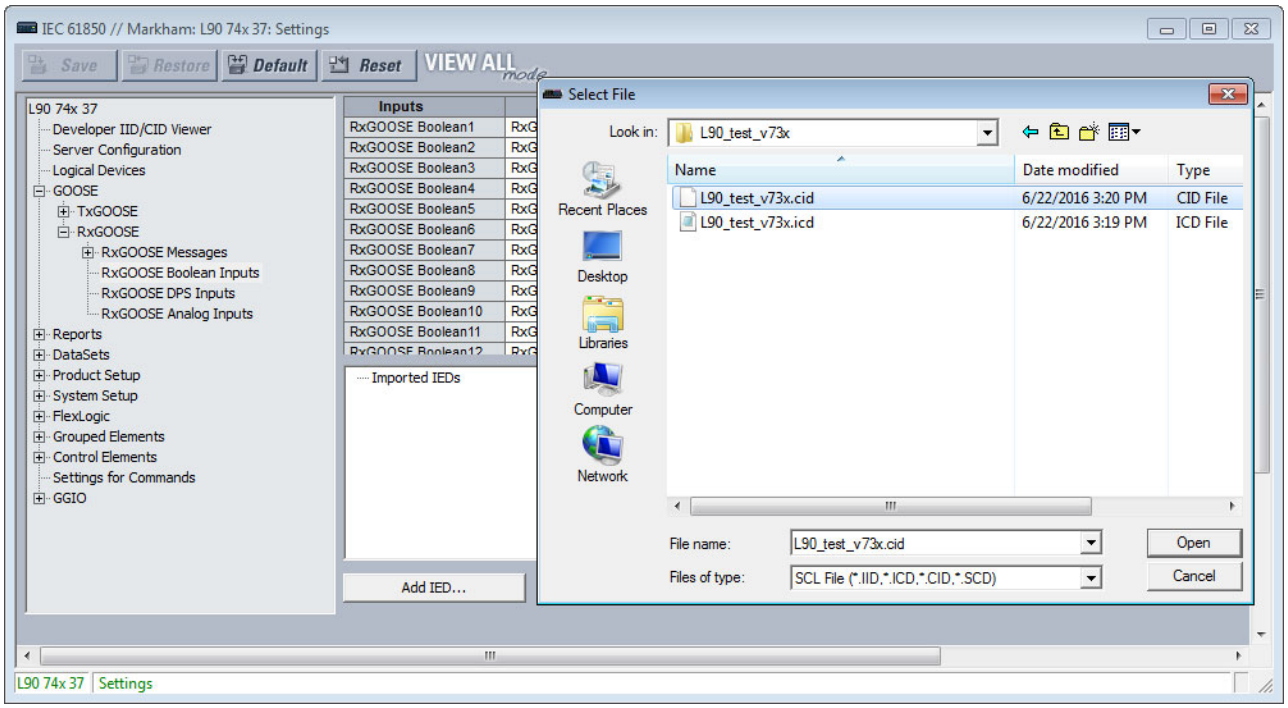

As outlined earlier, most of the settings are configured by drag-and-drop. Enter manually the ID, DEFAULT STATE, and EVENTS settings when the factory default values are not acceptable.

RxGOOSE Boolean1 ID

Range: 0 to 20 characters

Default: RxG Bool1

This setting allows the user to assign descriptive text to the name of the RxGOOSE Boolean1 FlexLogic operand. The full operand name is the value of this setting appended with " On". The basic and enhanced front panels display the first 17 characters of this setting plus " On" to fit the 20 character display.

The setting value is auto-populated and read-only for quality mapped to a configured remote input.

RxGOOSE Boolean1 RxGOOSE

Range: None, RxGOOSE1, RxGOOSE2, and so on

Default: None

This setting selects the RxGOOSE containing the value that drives the RxGOOSE Boolean1 FlexLogic operand. If set to None, the RxGOOSE Boolean1 FlexLogic operand assumes its default state.

The setting value is auto-populated and read-only for quality mapped to a configured remote input.

RxGOOSE Boolean1 Member

Range: 1 to 64 in steps of 1

Default: 1

This setting selects the GOOSE message member that drives the RxGOOSE Boolean1 FlexLogic operand. A setting of 1 selects the first member, 2 selects the second member, and so on. Entering a number greater than the number of members in the message and entering the number of a member which does not contain a BOOLEAN results in the RxGOOSE Boolean1 FlexLogic operand assuming its default state. The Subscribed to column identifies the particular Boolean subscribed to even if the member is a structure containing more than one Boolean.

The setting value is auto-populated and read-only for quality mapped to a configured remote input.

RxGOOSE Boolean1 DEFAULT STATE

Range: On, Off, Latest/On, Latest/Off

Default: Off

This setting selects the logic state for the RxGOOSE Boolean1 FlexLogic operand if the UR has just completed startup and the selected RxGOOSE has not yet received a message, or the selected RxGOOSE has lost its connectivity with the publisher. The following choices are available:

- "On" value defaults the input to logic 1
- "Off" value defaults the input to logic 0
- "Latest/On" freezes the input in case of lost connectivity. If the latest state is unknown, such as after UR power-up but before the first communication, the input defaults to logic 1. When communication resumes, the input becomes fully operational.
- "Latest/Off" freezes the input in case of lost connectivity. If the latest state is unknown, such as after UR power-up but before the first communication, the input defaults to logic 0. When communication resumes, the input becomes fully operational.

RxGOOSE Boolean1 EVENTS

Range: Disabled, Enabled

Default: Disabled

This setting selects whether Off to On transitions of the RxGOOSE Boolean1 FlexLogic operand are recorded by the event recorder. If set to Enabled, Off to On transitions are recorded. On to Off transitions are never recorded, even if events are enabled.

RxGOOSE DPS inputs

Navigate to **Settings > Product Setup > Communications > IEC 618560 > GOOSE > RxGOOSE > RxGOOSE DPS Inputs**.

Figure 5-31: RxGOOSE DPS Inputs panel (Edition 2)

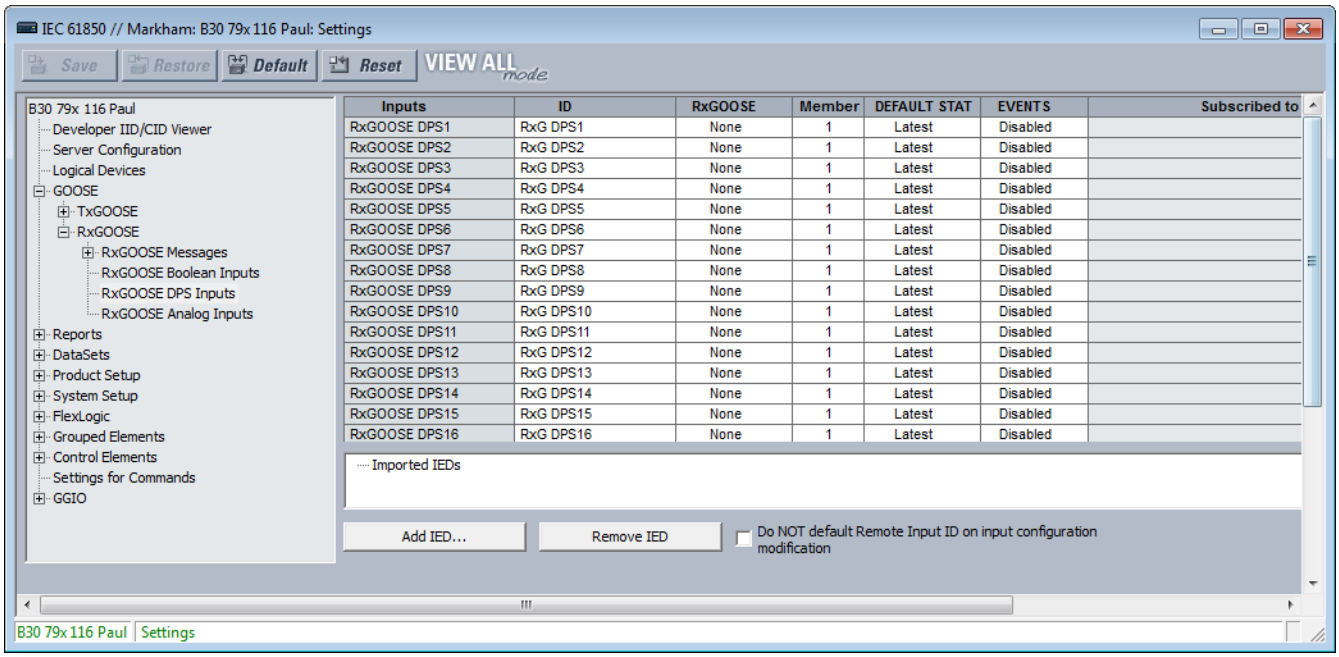

5

As outlined earlier, most of the settings are configured by drag-and-drop. Enter manually the ID, DEFAULT STATE, and EVENTS settings when the factory default values are not acceptable.

RxGOOSE DPS1 ID

Range: 0 to 20 characters

Default: RxG DPS1

This setting allows the user to assign descriptive text to the names of the four RxGOOSE DPS1 FlexLogic operands. The full operand name is the value of this setting appended with "Interm," "On," "Off," or "Bad." The basic and enhanced front panels display the first 13 characters of this setting plus the state suffix to fit the 20 character display.

RxGOOSE DPS1 RxGOOSE

Range: None, RxGOOSE1, RxGOOSE2, and so on

Default: None

This setting selects the GOOSE message containing the value that drives the RxGOOSE DPS1 FlexLogic operand. If set to None, the RxGOOSE DPS1 FlexLogic operand assumes its default state.

RxGOOSE DPS1 Member

Range: 1 to 64 in steps of 1

Default: 1

This setting selects the GOOSE message member that drives the RxGOOSE DPS1 FlexLogic operand. A setting of 1 selects the first member, 2 selects the second member, and so on. Entering a number greater than the number of members in the message and entering the number of a member that is not a Dbpos results in the RxGOOSE DPS1 FlexLogic operand assuming its default state. In the case that the member is a structure containing more than one Dbpos, the Subscribed to column identifies the particular Dbpos subscribed to.

RxGOOSE DPS1 DEFAULT STATE

Range: Intermediate-state, Off, On, Bad-state, Latest

Default: Latest

This setting selects the logic state for the data attribute @Master/GGIO3.IndPos01.stVal and the DPS FlexLogic operands when the UR has just completed start-up and the selected RxGOOSE has not yet received a message, and when the RxGOOSE has lost its connection with the publisher. When this setting is selected to Latest, the value of @Master/GGIO3.IndPosψψ.stVal is Intermediate-state when the UR has just completed start-up and the selected RxGOOSE has not yet received a message, and the latest received value when the RxGOOSE loses its connectivity with the publisher.

RxGOOSE DPS1 EVENTS

Range: Disabled, Enabled

Default: Disabled

This setting selects whether Off to On transitions of the RxGOOSE DPS1 FlexLogic operands are recorded by the event recorder. If set to Enabled, Off to On transitions are recorded. On to Off transitions are never recorded, even if events are enabled.

RxGOOSE analog inputs

Navigate to **Settings > Product Setup > Communications > IEC 61850 > GOOSE > RxGOOSE > RxGOOSE Analog Inputs**.

There are 32 RxGOOSE analog inputs.

Figure 5-32: RxGOOSE Analog Inputs panel (Edition 2)

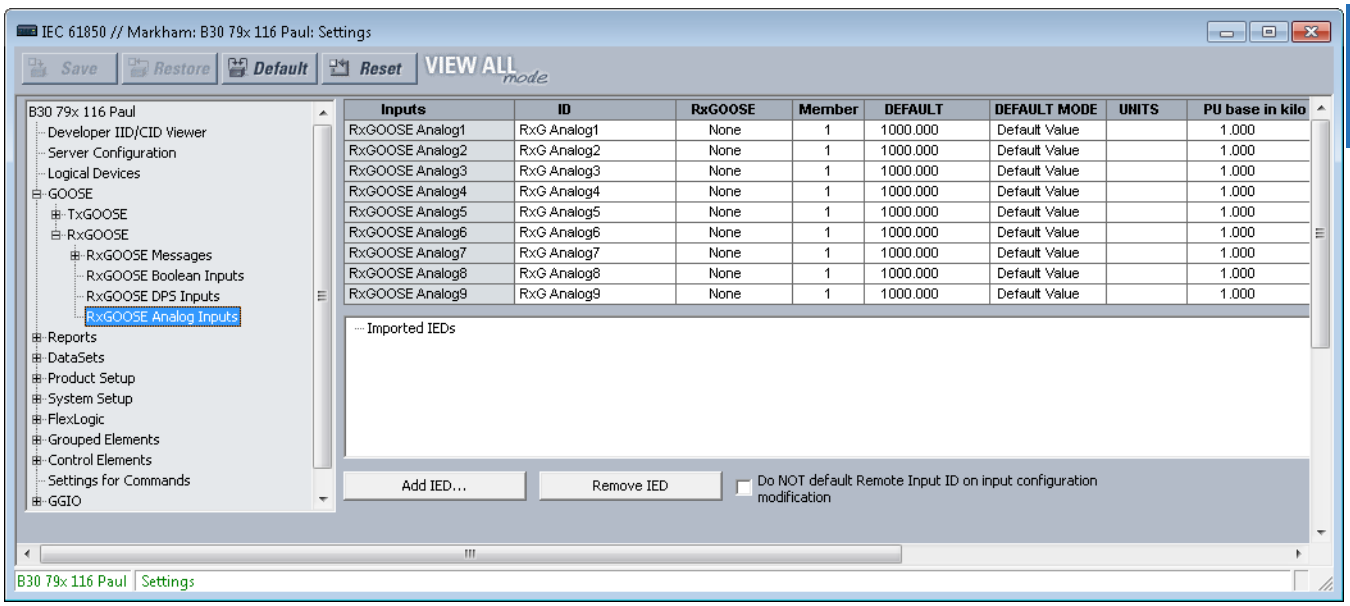

As outlined earlier, most of the settings are configured by drag-and-drop. Enter manually the ID, DEFAULT STATE, and EVENTS settings when the factory default values are not acceptable.

RxGOOSE Analog1 ID

Range: 0 to 20 characters

Default: RxG Analog1

This setting allows the user to assign descriptive text to RxGOOSE Analog1. Unlike RxGOOSE Booleans and RxGOOSE DPS, the RxGOOSE Analog operands have fixed names, for example RxGOOSE Analog1.

RxGOOSE Analog1 RxGOOSE

Range: None, RxGOOSE1, RxGOOSE2, and so on

Default: None

This setting selects the GOOSE message that drives the RxGOOSE Analog1 FlexAnalog operand. If set to None, the RxGOOSE Analog1 FlexAnalog operand assumes its default state.

RxGOOSE Analog1 Member

Range: 1 to 64 in steps of 1

Default: 1

This setting selects the GOOSE message member that drives the RxGOOSE Analog1 FlexAnalog operand. A setting of 1 selects the first member, 2 selects the second member, and so on. Entering a number greater than the number of members in the message and entering the number of a member that does not contain a FLOAT32, INT8U, INT16U, INT32U, INT32, or ENUM results in the RxGOOSE Analog1 FlexAnalog operand assuming its default state. The Subscribed to column identifies the particular FLOAT32 subscribed to even if the member is a structure containing more than one FLOAT32.

RxGOOSE Analog1 DEFAULT

Range: -1000000.000 to 1000000.000 in steps of 0.001

Default: 1000.000

This setting specifies the value of the GOOSE analog input when the selected RxGOOSE has lost its connectivity with the publisher and the RxGOOSE Analog1 DEFAULT MODE is set to "Default Value." Otherwise this setting has no effect. This setting is stored as an IEEE 754 / IEC 60559 floating point number. Because of the large range of this setting, not all possible values can be stored. Some values can be rounded to the closest possible floating point number.

RxGOOSE Analog1 DEFAULT MODE

Range: Default Value, Last Known

Default: Default Value

When the selected RxGOOSE has lost its connectivity with the publisher and this setting is "Last Known," the value of the RxGOOSE Analog1 FlexLogic operand remains at the last received value. When the selected RxGOOSE has lost its connectivity with the publisher and this setting value is "Default Value," then the RxGOOSE Analog1 FlexLogic operand is defined by the RxGOOSE Analog1 DEFAULT setting. After restart, until a message is received, the operand value is the default value.

RxGOOSE Analog1 UNITS

Range: up to 4 characters

Default: empty string

This setting specifies a four-character string that is used in the actual values display of RxGOOSE Analog1.

RxGOOSE Analogs are floating-point values, with no units. The RxGOOSE UNIT and PU base settings allow the user to configure RxGOOSE Analog, so that it can be used in a FlexElement.

RxGOOSE Analogs that represent current, voltage, power, frequency, angles, or power factor can be used in a FlexElement. The following text must be used in the UNITS setting, to represent these types of analogs: A, V, W, var, VA, Hz, deg, and no text (blank setting) for power factor.

RxGOOSE Analogs can be compared to other RxGOOSE Analogs with any character string or no string.

RxGOOSE Analog1 PU Base in kilo

Range: 0.000 to 1000000000.000 in steps of 0.001

Default: 1.000

This setting specifies the per-unit base value for other N60 features to use with the RxGOOSE Analog 1 FlexAnalog operand. A FlexElement for instance subtracts two quantities after converting their values to integers rescaled to a common base, the common base being the largest of the base values of the two quantities. If one of quantities is RxGOOSE Analog1 and its per-unit base value is not appropriate, the rescaling operation can result in unnecessary loss of precision or overflow in the integer result. The FlexElement Base Units table in the Settings > FlexLogic > FlexElements section later, which tabulates the per-unit base value used by its pickup setting and implies the per-unit base used by other FlexAnalogs, can be of use in selecting a value for the **RxGOOSE Analog1 PU** setting.

Some UR elements have requirements for the type of input operands, for instance current type or voltage type. These elements assume that RxGOOSE Analog operands are of whatever type is necessary to meet these requirements.

The per-unit base setting represents thousands, not single units. For example, a PU base of 1.000 is actually 1000 and a PU base of 0.001 is 1.

When using RxGOOSE Analogs and PU base in FlexElements, the largest value that can be displayed in the FlexElement actual values is 2,140,000.000.

RxGOOSE Analog1 Expression

Range: None, Equal to, Not Equal to, Greater than, Less than

Default: None

This setting specifies the expression type to be used with the RxGOOSE Analog In1 FlexAnalog operand. The result of the expression is converted into Boolean status and assigned to the RxGOOSE Analog1 Expn St operand. When the expression result is true, RxGOOSE Analog1 Expn St operand is set. When the expression set to None, no expression is assigned and RxGOOSE Analog1 Expn St is always in reset state.

When the expression is set to other than "None", RxGOOSE Analog In1 is compared with the configured Expression value based on the selected Expression type.

NOTE

When the remote signal type is "Float," the "Equal to" and "Not Equal to" expressions may not give accurate results due to precision errors in decimals.

RxGOOSE Analog1 Expression Value

Range: -1000000.000 to 1000000 in steps of 1

Default: 1

This setting specifies the Expression value for comparison.

5

Reports

Navigate to **Settings > Product Setup > Communications > IEC 61850 > Reports**.

Report settings

Navigate to **Settings > Product Setup > Communications > IEC 61850 > Reports > Report Settings**.

ReportSettings rptID

Range: Dyn, Conf

Default: Dyn

When set to Dyn, the RptID attribute in any buffered and unbuffered report control block can be modified by an MMS client while the control block's RptEna attribute is false. The RptID is the name of the report.

ReportSettings optFields

Range: Dyn, Conf

Default: Dyn

When set to Dyn, the OptFlds attribute in any buffered and unbuffered report control block can be modified by an MMS client while the control block's RptEna attribute is false.

ReportSettings bufTime

Range: Dyn, Conf

Default: Dyn

When set to Dyn, the BufTm attribute in any buffered and unbuffered report control block can be modified by an MMS client while the control block's RptEna attribute is false.

ReportSettings trgOps

Range: Dyn, Conf

Default: Dyn

When set to Dyn, the TrgOps attribute in any buffered and unbuffered report control block can be modified by an MMS client while the control block's RptEna attribute is false.

ReportSettings intgPd

Range: Dyn, Conf

Default: Dyn

When set to Dyn, the IntgPd attribute in any buffered and unbuffered report control block can be modified by an MMS client while the control block's RptEna attribute is false.

4.14.4ClientLN Configuration

Following ClientLN configuration screen is only available using Setup tool. They also can be configured in the software using a CID or SCD file.

PATH: SETTINGS > IEC 61850 > Reports > Report Settings

Figure 5-33: IEC 61850 buffered report pane

Client1 Configuration	Import SCL
Client1 IED Name	Client1
Client1 apRef	
Client1 LDInst	
Client1 LNPrefix	
Client1 LNClass	
Client1 LNInst	
Client1 IP	127.0.0.1
Client1 PSEL	00000001
Client1 SSEL	0001
Client1 TSEL	0001
Client1 AP Title	1,1,9999,1
Client1 AE Qualifier	12
Client1 AE Invoke ID	1
Client1 AP Invoke ID	1

NOTE

Note that the following settings are not front panel accessible and only Enervista or other CID configurable softwares.

Client Configuration

The button Import SCL allows to select a CID or a SCD file with Client IED configuration. When a SCL file is selected, a window with the data model of all the IEDs available in the SCL file are displayed. When any Logical Node is selected, the Data model and the authentication settings of the corresponding IED are auto-populated.

IED Name

Range: 64 Alphanumeric Characters and "-"

Default: empty string

The setting specifies the name of the Client IED where the ClientLN resides. IED name must be set, if the Client is configured to any Report.

apRef

Range: 32 Alphanumeric Characters

Default: empty string

The name of the access point via which the IED shall be accessed. Optional, not needed if the IED has only one access point.

LD Inst

Range: 64 Alphanumeric Characters and "-"

Default: empty string

The instance identification of the LD where the LN resides. If not configured, LD0 is populated as LDInst in SCL files.

LN Prefix

Range: 12 Alphanumeric Characters and "-"

Default: empty string

LN Class

Range: Any LN Class as defined in IEC 61850-7-4

Default: empty string

The LN class according to IEC 61850-7-4 or domain specific standards.

LNInst

Range: 0-9, Max 12 digits

Default: empty string

The instance id of this LN instance of below LN class in the IED

IP

Range: Dotted decimal IP address

Default: 127.0.0.0

Client IP address.

PSEL

Range : Any 8 Octet non-empty, even number of characters, maximum 16 characters 0-9, A-F

Default: 00 00 00 01

Presentation Selector.

SSEL

Range : Any 8 Octet non-empty, even number of characters, maximum 16 characters 0-9, A-F

Default: 00 01

Session Selector.

TSEL

Range : Any 8 Octet non-empty, even number of characters, maximum 16 characters 0-9, A-F

Default: 00 01

Transport Selector.

AP Title

Range : Any digit comma separated decimal digits and non-repeating commas

Default: 1,1,9999,1

AP Title.

AE Qualifier

Range : 0- 65535

Default: 12

AE Qualifier.

AE Invoke ID

Range : 0- 65535

Default: 1

AE Invoke ID.

AP Invoke ID

Range : 0- 65535

Default: 1

AP Invoke ID.

Buffered and unbuffered reports

Navigate to **Settings > Product Setup > Communications > IEC 61850 > Reports > Buffered Reports** or **Unbuffered Reports**.

Figure 5-34: IEC 61850 buffered report panel

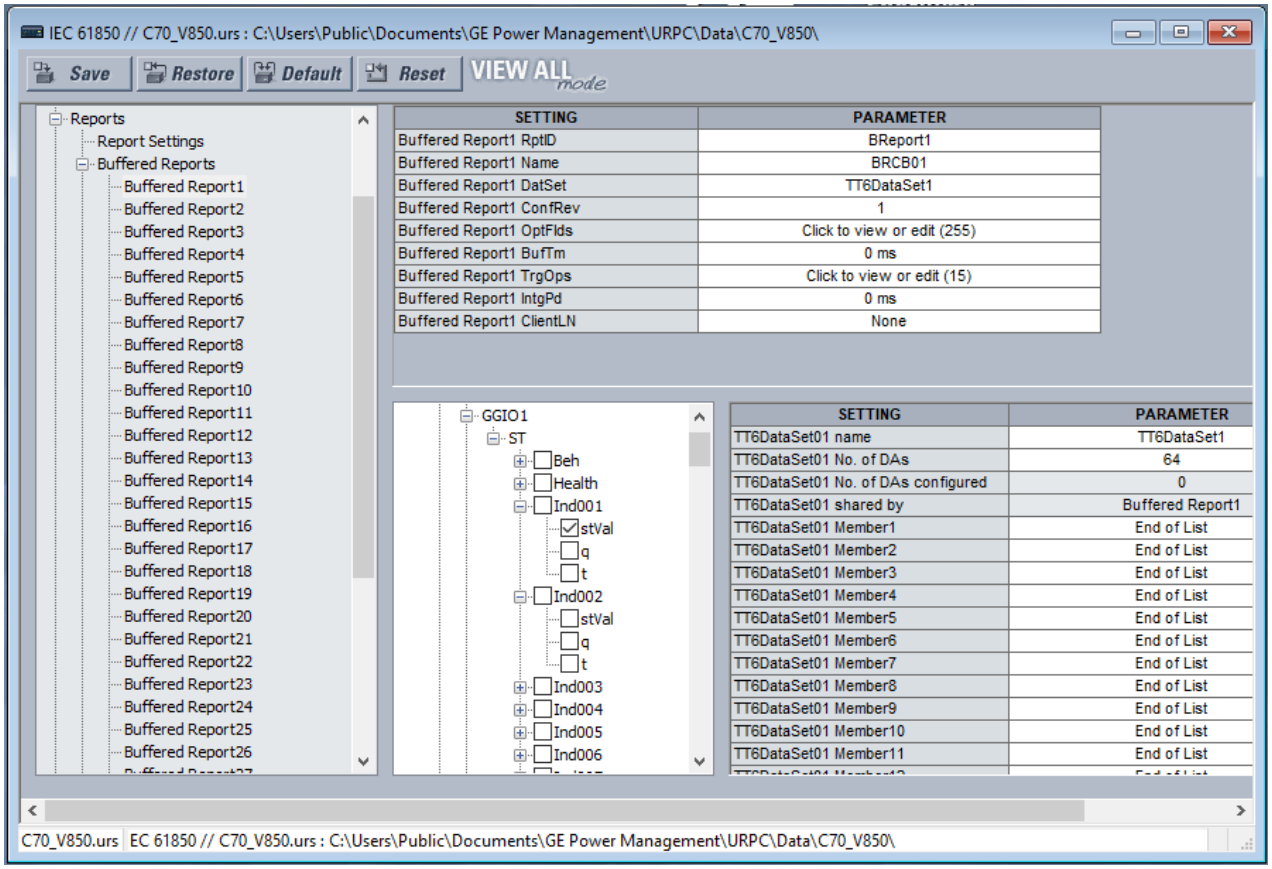

IEC 61850 reports are an efficient method used to deliver generic substation event information from a single server, such as a B30), to a single client, such as a supervisory control IED. Reports are either buffered or unbuffered. Each configured report provides a report control block (rcb) that allows the client to control the flow of reports from the B30 IED. The following table lists the number of IEC 61850 report control blocks of each type provided by the B30.

Each report control uses an IEC 61850 dataset to determine the data that will be reported. Buffered report elements queue value changes that occur while the client is offline and will be delivered when the client re-connects. Up to 512 events can be queued. Unbuffered control blocks purge all value change events when the connection to the client is lost; any events that occur while the client is not connected are lost.

Table 5-8: Number of report control blocks

	Number
Buffered reports	30
Unbuffered reports	18

When using IEC 61850 Edition 2, configurable Reports interoperate with any client device of any manufacturer that conforms to the IEC 61850 Edition 1 or 2 report client requirements.

When using IEC 61850 Edition 1, configurable Reports interoperate with any client device of any manufacturer that conforms to the IEC 61850 Edition 1 report client requirements.

The entities whose values are reported by a Configurable Report are known as members. The members are itemized in an ordered list known as a data set. Each Configurable Report can use any one of the data sets provided.

Each enabled Configurable Report transmits an update to its client whenever a value change is detected in one or more of its members. Also, the control block can be configured to send integrity reports containing the present value of all members either on demand from the client or periodically. A TCP handshaking mechanism causes messages that are not read and acknowledged by the client to be retransmitted.

For a Configurable Report to operate, its members must be selected (that is, its data set configured) and a client must open a connection to, configure, and enable its report control block. Control blocks and data sets can be pre-configured by sending the N60 a CID file. See the UR Family Communications Guide for details. EnerVista UR Setup also can be used to select the data set members and to pre-configure the control blocks.

Each buffered report has the following settings.

Buffered Report1 RptID

Range for Edition 2: 0 to 129 VisibleString characters
Range for Edition 1: 0 to 65 VisibleString characters
Default: empty string

The name of the report. The entered value sets the RptID value in Buffered Report1 messages, and it can be used by the client to discriminate Buffered Report1 messages from other messages. If the number of characters entered is zero, the value used for RptID in messages is an ObjectReference to the report's control block, that is, "<LDName>/LLN0BR"BRCB01".

Buffered Report1 Name

Range: 0 to 32 VisibleString characters
Default: BRCB01

The entered value sets the report control block name value for Buffered Report1.

Buffered Report1 DatSet

Range: None, TT6DataSet1, TT6 DataSet2, ..., TT3DataSet01, TT3DataSet02, ...
Default: None

This setting selects the data set whose members' status is reported in Buffered Report1 messages using the UR Setup software designator for the data set. The IEC 61850 name of the data sets are configured in the Datasets panel, as described later.

An ObjectReference to the data set, which consists of the concatenation of the string "<LDName>/LLN0$" and the data set name, is used in the datSet field of report messages, and it can be used by the client to discriminate Buffered Report1 messages from other messages.

The performance of the report is determined by the performance of the selected dataset. When the selection is TT3DataSet01, TT3DataSet02, ... it is possible that transient events can be missed.

To configure a DataSet, select it at the top of the window from the drop-down list, for example DataSet02 shown in the previous figure. In the lower part of the window, drag and drop configuration items to the right side. For example select the **ST Ind001 stVal** item and drag it to DataSet Member 1. Dataset members configured here affect other Report or TxGOOSE control blocks that use the same DataSet.

Buffered Report1 ConfRev

Range: 0 to 4294967295 in steps of 1
Default: 1

The entered value sets the confRev value in Buffered Report1 messages, and it can be used by clients to discriminate report messages of the expected configuration revision from messages of a different revision. The standard requires that confRev be incremented each time the members or the order of the members is changed, and each time the data set name is changed. The standard states that the value of 0 is reserved.

Buffered Report1 OptFlds

Range: The check box for each individual bit can be enabled or not (see figure)

Default: All bits enabled/ true

The OptFlds setting is bitstring that controls which of the optional fields are included in report messages. The figure shows the available option bits. To reduce message size, uncheck any fields that are not needed.

Figure 5-35: Options for buffered report messages (Edition 2)

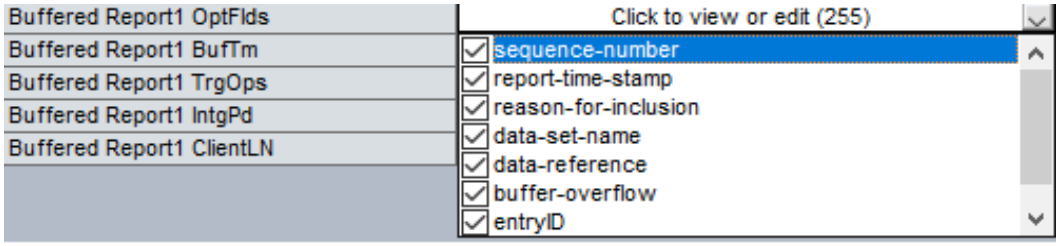

Buffered Report1 BufTm

Range: 0 to 4294967295 in steps of 1

Default: 0 ms

The entered value sets the time interval in milliseconds for the buffering of events for inclusion in a single report.

5

Buffered Report1 TrgOps

Range: The check box for an individual bit can be enabled or not

Default: All bits enabled / true

The TrgOps setting is bitstring that controls which trigger conditions are monitored in this report. The options are as follows. Uncheck any trigger conditions that are not needed.

- data-change
- quality-change
- integrity
- general interrogation (IEC 61850 Edition 2)

Buffered Report1 IntgPd

Range: 0 to 4294967295 in steps of 1

Default: 0 ms

The entered value sets the period in milliseconds for generating Buffered Report1 integrity reports. An integrity report includes the values of all members of the referenced data set, whether a change has occurred or not.

Buffered Report1 ClientLN

Range: None, Dynamic list of configured ClientLNs

Default: None

The ClientLN setting specifies the name of the LN in the system, which is a client to the Buffered Report1. The ClientLN is the LN object reference from the list of configured client list, <LDName>/<LN Prefix><LN Class><LN inst>.

For Ex: DUMMYclientLD0/LLN0 or DUT1CR5/LLN0

Each unbuffered report has the following settings.

Unbuffered Report1 RptID

Range for Edition 2: 0 to 129 VisibleString characters
Range for Edition 1: 0 to 65 VisibleString characters
Default: empty string

The name of the report. The entered value sets the RptID value in Unbuffered Report1 messages, and it can be used by the client to discriminate Unbuffered Report1 messages from other messages. If the number of characters entered is zero, the value used for RptID in messages is an ObjectReference to the report's control block, that is, "<LDName>/LLN0RP"URCB01".

Unbuffered Report1 Name

Range: 0 up to 32 VisibleString characters
Default: URCB01

The entered value sets the report control block name value for Unbuffered Report1.

Unbuffered Report1 DatSet

Range: None, TT6DataSet1, TT6 DataSet2, ..., TT3DataSet01, TT3DataSet02, ...
Default: None

This setting selects the data set whose members' status is reported in Unbuffered Report1 messages using the UR Setup software designator for the data set. The IEC 61850 name of the data sets are configured in the Datasets panel, as described later.

An ObjectReference to the data set, which consists of the concatenation of the string "<LDName>/LLN0$" and the data set name, is used in the datSet field of report messages, and it can be used by the client to discriminate Unbuffered Report1 messages from other messages.

The performance of the report is determined by the performance of the selected dataset. When the selection is TT3DataSet01, TT3DataSet02, ... it is possible that transient events can be missed.

Unbuffered Report1 ConfRev

Range: 0 to 4294967295 in steps of 1
Default: 1

The entered value sets the confRev value in Unbuffered Report1 messages, and it can be used by clients to discriminate report messages of the expected configuration revision from messages of a different revision. The standard requires that confRev be incremented each time the members or the order of the members is changed, and each time the data set name is changed. The standard states that the value of 0 is reserved.

Unbuffered Report1 OptFlds

Range: The check box for an individual bit can be enabled or not
Default: All bits enabled / true

The OptFlds setting is bitstring that controls which of the optional fields are included in report messages. The options are as follows. To reduce message size, uncheck any fields that are not needed.

- sequence-number
- report-time-stamp
- reason-for-inclusion
- data-set-name
- data-reference
- conf-revision

For IEC 61850 Edition 2, the OptFlds bits buffer-overflow and entryID also listed are not applicable to unbuffered reports even though the bits exist in the protocol. They are unchecked by default.

For IEC 61850 Edition 1, the entryID also listed is not applicable to unbuffered reports even though the bits exist in the protocol. It is unchecked by default.

Unbuffered Report1 BufTm

Range: 0 to 4294967295 in steps of 1
Default: 0 ms

The entered value sets the time interval in milliseconds for the buffering of events for inclusion into a single report.

Unbuffered Report1 TrgOps

Range: The check box for an individual bit can be enabled or not

Default: All bits enabled / true

The TrgOps setting is bitstring that controls which trigger conditions are monitored in this report. The options are as follows. Uncheck any trigger conditions that are not needed.

- data-change
- quality-change
- integrity
- general interrogation (IEC 61850 Edition 2)

Unbuffered Report1 IntgPd

Range: 0 to 4294967295 in steps of 1

Default: 0 ms

The entered value sets the period in milliseconds for generating Unbuffered Report1 integrity reports. An integrity report includes the values of all members of the referenced data set, whether a change has occurred or not.

Unbuffered Report1 ClientLN

Range: None, Dynamic list of configured ClientLNs

Default: None

The ClientLN setting specifies the name of the LN in the system, which is a client to the Unbuffered Report1. The ClientLN is the LN object reference from the list of configured client list, <LDName>/<LN Prefix><LN Class><LN inst>.

For Ex: DUMMYclientLD0/LLN0 or DUT1CR5/LLN0

5

DataSets

Navigate to **Settings > Product Setup > Communications > IEC 61850 > DataSets**.

As outlined, the members whose values are communicated by these services are itemized in an ordered list known as a data set. Each UR with the IEC 61850 option has 18 data sets (six fast and 12 slow). Each data set can contain as many as 192 members. Any data set can be used simultaneously by any number of TxGOOSE elements and/or by any number of Configurable Report elements.

Figure 5-36: IEC 61850 DataSets (Edition 2)

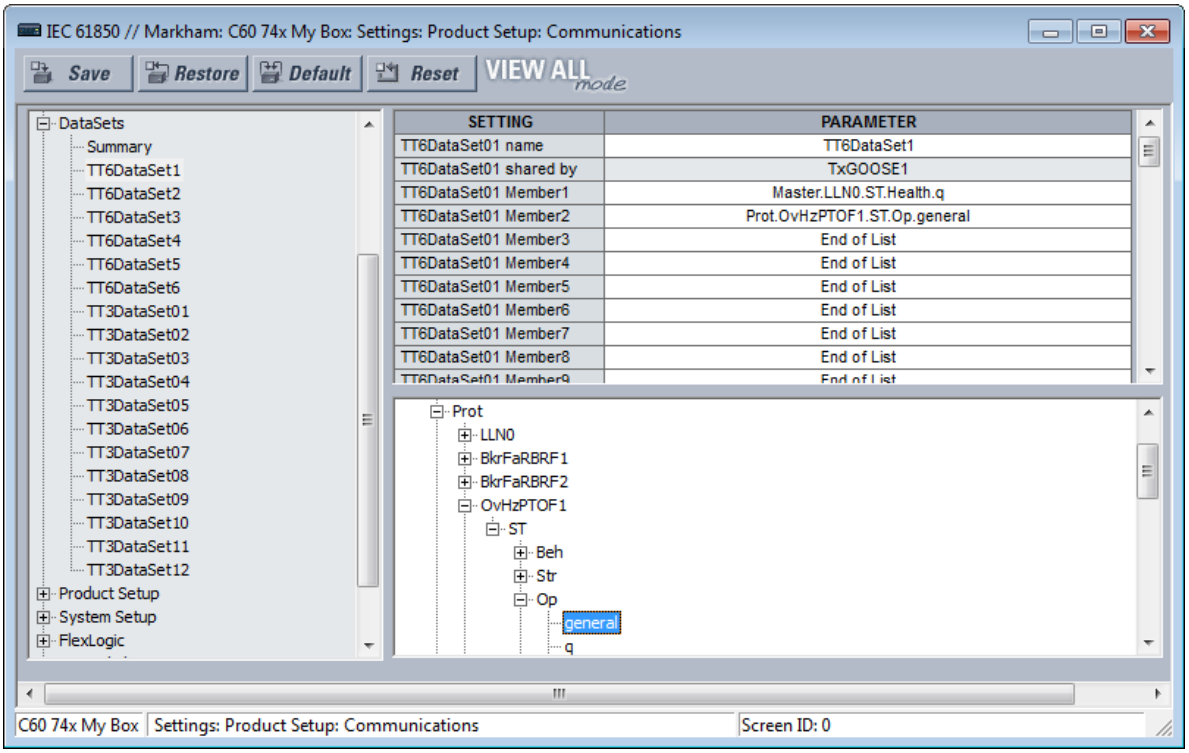

UR Setup software requires data set members to be IEC 61850 data objects or data attributes with Functional Constraint ST or MX. Certain FlexLogic and FlexAnalog operands have factory-assigned data attributes as tabulated in the UR Family Communications Guide. All FlexLogic and FlexAnalog operands can be user-assigned to GGIO1 or GGIO4 data attributes, so that operands without factory-assigned data attributes can still have their values published. See the GGIO1 and GGIO4 sections later for details.

Datasets used by TxGOOSE1, TxGOOSE2, and/or by reports also provide a chatter suppression service for their Boolean members. Oscillation in a value, also known as chatter, can be caused by errors in logic programming, inadequate hysteresis (deadband) on a threshold, or a failed station component. Chatter can flood a communications network with GOOSE messages, degrading response time for all users. If chatter is detected in a Boolean member, TxGOOSE suspends GOOSE event message triggering and report message triggering from that member for as long as the condition exists, and for a minimum period of one second. While sending is suspended, a self-test message identifying the specific data item detected as oscillating is activated.

For a summary of the panels in which the data sets are used, the path is **Settings > Product Setup > Communications > IEC 61850 > DataSets > Summary**.

For the settings, navigate to **Settings > Product Setup > Communications > IEC 61850 > DataSets > TT6DataSet1** for the first data set.

Copy and paste functions are available when right-clicking a DataSet. They allow the target dataset to be configured based on its order code. If some dataset items are not supported, they are not pasted, and a warning message shows a list of dataset items that were not supported and not pasted. The **DataSet name** is not copied or pasted. In short, use this feature to copy a **DataSet Member** setting and paste it into another Member setting, a text file, or Word, as examples.

Figure 5-37: Member right-click

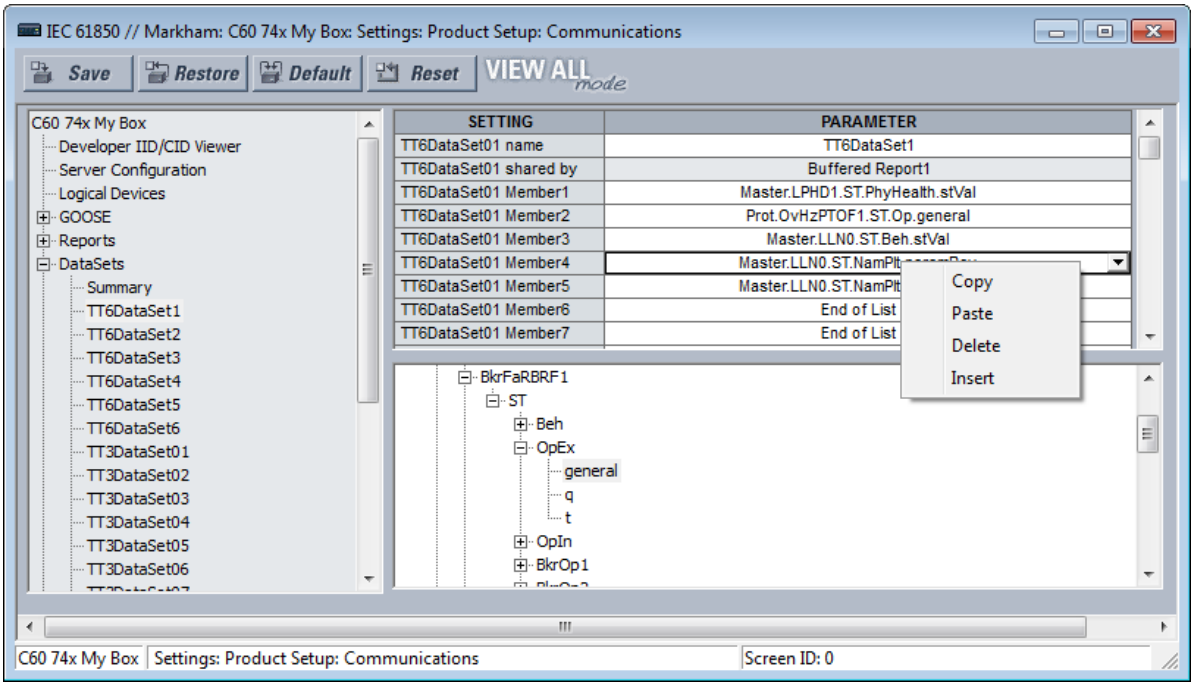

5

DataSet01 name

Range: 0 to 32 VisibleString characters
Default: DataSet01

The value entered sets the name of the data set, which is required to be unique within the UR for proper operation. The value entered sets the name of the data set, which is required to be unique within the UR for proper operation. Fast datasets start with TT6, and slow datasets start with TT3. Up to six fast datasets are allowed. Up to four fast GOOSE datasets are allowed.

An ObjectReference to the data set consists of a string that is the concatenation of "<LDName>/LLN0$" and the DataSet01 name setting value. An ObjectReference to the data set is published in the datSet field of TxGOOSE messages, and it can be used by subscribers to discriminate the messages of that TxGOOSE from other GOOSE messages. An ObjectReference to the data set is optionally published in the DatSet field of Report messages. Valid characters are upper and lowercase letters, digits, and the underscore (_) character. The first character must be a letter.

DataSet01 No. of DAs

Range: 32, 48, 64, 96, 128, 192

Default: 64

The maximum number of DAs that can be configured in this data set.

DataSet01 No. of Das configured

Range: actual number of DAs configured

Default: 0

The actual number of DAs currently configured in this data set.

DataSet01 shared by

Range: 0 to 32 VisibleString characters
Default:

Names of all control blocks that use this DataSet. Read-only field.

DataSet01 Member1

Range: End of List or any instantiated 61850 data object or data attribute with Functional Constraint ST or MX
Default: End of List

This setting specifies the first member in TxGOOSE1 messages. There is a similar setting for each of the up to 64 members that the UR allows in a Dataset. Only values of members before the first set to End of List are published.

Select the member from the drop-down list. Or right-click an entry to copy, paste, delete, or insert.

Product setup

Navigate to **Settings > Product Setup > Communications > IEC 61850 > Product Setup**.

Security

This setting applies to IEC 61850 Edition 2.

Navigate to **Settings > Product Setup > Communications > IEC 61850 > Product Setup > Security**.

Figure 5-38: IEC 61850 Security

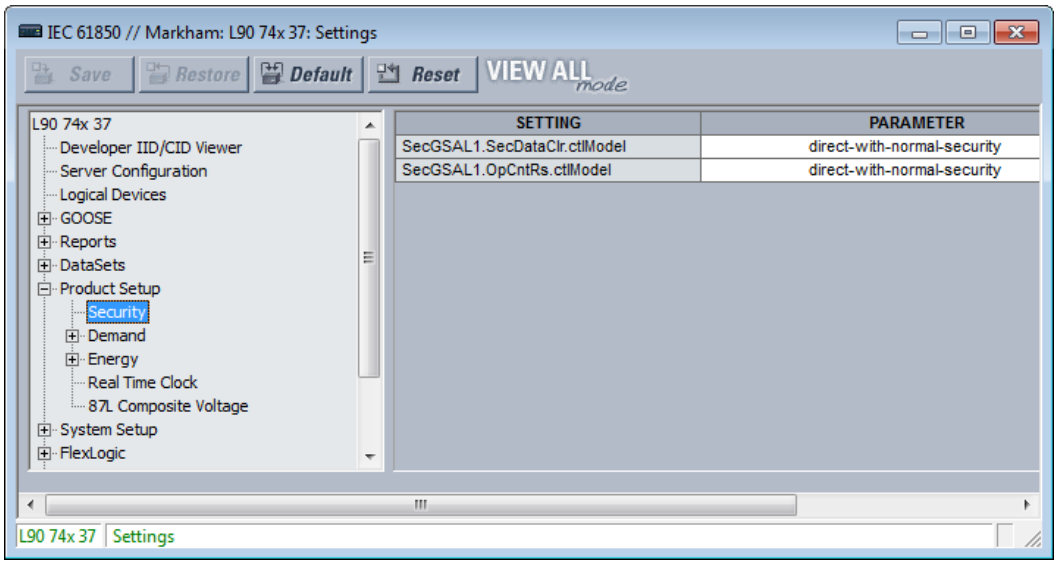

SecGSAL1.SecDataClr.ctlModel

Range: direct-with-normal-security, sbo-with-normal-security
Default: direct-with-normal-security

This setting selects the control model that clients must use to clear security data via commands to SecGSAL1.SecDataClr. "sbo" here is select-before-operate.

SecGSAL1.OpCntRs ctlModel

Range: direct-with-normal-security, sbo-with-normal-security
Default: direct-with-normal-security

This setting selects the control model that clients must use to clear security data via commands to SecGSAL1.OpCntRs. "sbo" here is select-before-operate.

Demand

Deadband parameters of measured values related to the Demand metering are configured here.

Energy

Deadband parameters of measured values related to the Energy metering are configured here.

Real Time Clock

This setting applies to IEC 61850 Edition 2.

Navigate to **Settings > Product Setup > Communications > IEC 61850 > Product Setup > Real Time Clock**.

Figure 5-39: IEC 61850 Real Time Clock

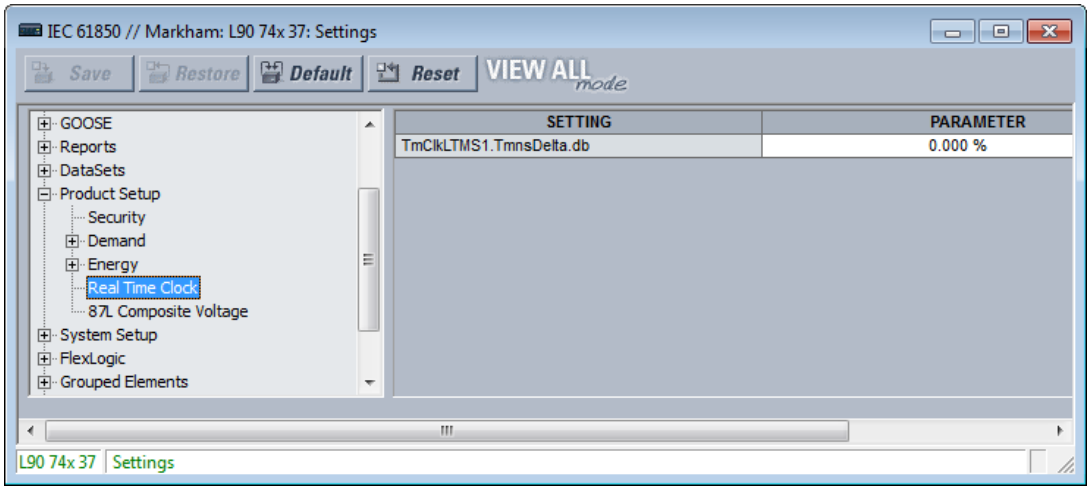

TmClkLTMS1.TmnsDelta.db

Range: 0.000 to 100.000 %

Default: 0.000 %

This setting is a deadband setting and is used by the relay to determine when to update the "mag" and "cVal" values from the associated "instMag" and "instCVal" values. The value shall represent the percentage of difference between maximum and minimum in units of 0.001%. The minimum and maximum values for TmnsDelta data object are -500000000 ns and 500000000 ns respectively and for example, a setting value of 0.002% results in the dead banded value of (500000000 - (-500000000)) * 0.002 / 100 = 20000 ns. The default setting value of 0.000% does not update the "mag" and "cVal" values.

Deadband settings

A deadband is a range in which no action occurs, usually expressed as a percentage.

The IEC 61850 panels contain hundreds of deadband settings, such as in the following panels: Product Setup > Real Time Clock, FlexLogic, Control Elements, and GGIO4. Each panel is not outlined here. The FlexLogic category applies to IEC 61850 Edition 2.

Deadband setting names all end either with "DB" or .db. As they all work the same way, but each on a different analog value, a single description applicable to all deadband settings is given here. The analog value that each deadband setting applies is usually obvious from the name of the setting. However, a tabulation of the analog values and their associated deadband setting can be found in the UR Family Communications Guide.

Figure 5-40: Deadband settings with .db suffix (Edition 2)

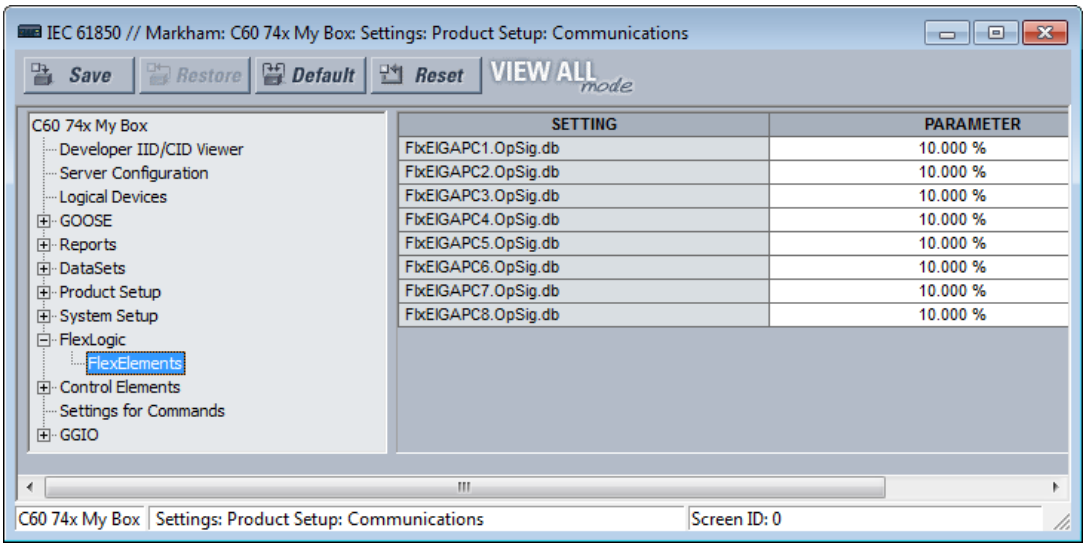

GOOSE, buffered report, and unbuffered report messages are for the most part transmitted only when there is a value change in one or more of their members. Most analog values continuously dither by an amount that is not significant. Were a report to be sent each time an insignificant analog value change occurred, then the communications network floods with GOOSE and report messages, degrading response time for all users.

To control this, a deadband setting is provided for each analog value. Also, in addition to the present actual value of each analog ("instMag" in the following figure), there is a deadbanded value ("mag" in the figure), which is updated with the present value only when the difference between the two exceeds the deadband setting (db in the figure). Changes to this deadbanded value trigger transmissions when included in GOOSE and report data sets.

5

Figure 5-41: Deadband settings

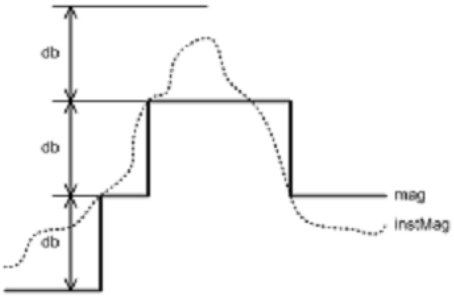

Deadband settings are entered in UR Setup software in units of percent of the difference between the "max." and "min." of the associated analog value. A zero deadband setting suppresses transmission triggering. The range of deadband settings is 0.000 to 100.000% in steps of 0.001. The default value is 100.000%.

GGIO4 elements have individual settings for "min." and "max." The min. and max. for FlxEIGAPC#.OpSig.db (FLEXELEMENT # OpSig) are -50 pu and +50 pu respectively. The min. value for all other quantities is 0. The max. values are as follows:

- Phase current — 46 x phase CT primary setting
- Neutral current — 46 x ground CT primary setting
- Ground current (sensitive ground CT) — 4.6 x sensitive ground CT primary setting
- Phase, phase-to-phase, and sequence voltage — 275 x phase VT ratio setting
- Auxiliary voltage — 275 x auxiliary VT ration setting
- Power (real, reactive, apparent, 3-phase, and 1-phase) — 4 × phase CT primary setting × 1.5 × VT Secondary setting × VT ratio setting

- Energy (real or imaginary) — 4 × phase CT primary setting × 1.5 × VT Secondary setting × VT ratio setting × 1 hour
- Frequency — 90 Hz
- Frequency rate of change — 90 Hz/s
- Power factor — 2
- Angle — 360 degrees
- Starts per hour lockout time - 60 minutes
- Time between starts lockout time - 300 minutes
- Restart delay lockout time - 50000 seconds
- Thermal lockout time - 65000 minutes
- Total motor lockout time - 65000 minutes
- Thermal lockout time - 65000 minutes

Select the deadband settings from knowledge of the characteristics of the power system quantity measured and knowledge of the demands of the applications receiving the measurement via GOOSE or report such that changes of significance to the application are promptly reported, yet the network is not overly burdened with event messages.

Signal sources

Deadband parameters of measured values related to the signal sources are configured here.

Breakers

The UR breaker control and status monitoring elements have certain settings that configure how the IEC 61850 protocol interacts with these elements. These settings are described in this section. See the Breakers section in the System Setup section of this chapter for details on the operation of breaker control elements.

Navigate to **Settings > Communications > IEC 61850 > System Setup > Breakers > Breaker 1** to access the settings that configure the IEC 61850 protocol interface with the first breaker control and status monitoring element. The settings and functionality for the others are similar.

Figure 5-42: IEC 61850 Breaker panel (Edition 2)

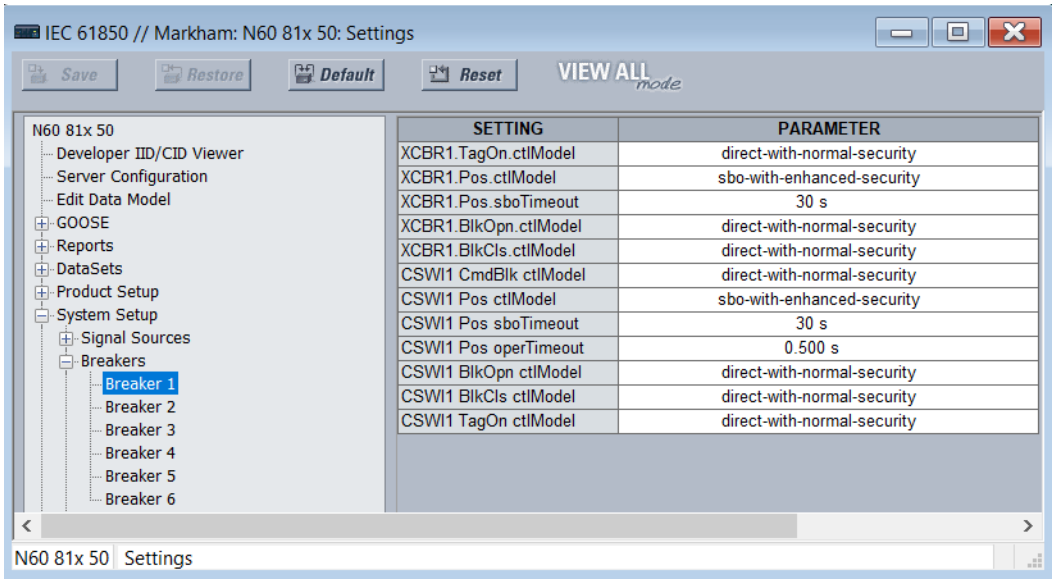

SETTING	PARAMETER
XCBR1.TagOn.ctlModel	direct-with-normal-security
XCBR1.Pos.ctlModel	sbo-with-enhanced-security
XCBR1.Pos.sboTimeout	30 s
XCBR1.BlkOpn.ctlModel	direct-with-normal-security
XCBR1.BlkCls.ctlModel	direct-with-normal-security
CSWI1 CmdBlk ctlModel	direct-with-normal-security
CSWI1 Pos ctlModel	sbo-with-enhanced-security
CSWI1 Pos sboTimeout	30 s
CSWI1 Pos operTimeout	0.500 s
CSWI1 BlkOpn ctlModel	direct-with-normal-security
CSWI1 BlkCls ctlModel	direct-with-normal-security
CSWI1 TagOn ctlModel	direct-with-normal-security

XCBR1 TagOn ctlModel

Range: status-only, direct-with-normal-security, sbo-with-normal-security, direct-with-enhanced-security, sbo-with-enhanced-security
Default: direct-with-normal-security

This setting determines the initial IEC 61850 control model (ctlModel) values for the TagOn data object in the XCBR logical node. The IEC 61850 client must issue the control request on TagOn data object as per the selected control mode, in order to tag/remove the tag on respective breaker element.

XCBR1 Pos ctlModel

Range: status-only, direct-with-normal-security, sbo-with-normal-security, direct-with-enhanced-security, sbo-with-enhanced-security
Default: sbo-with-enhanced-security

This setting selects the control model clients must use to successfully control the breaker 1 signal marked Bkr0XCBR1.Pos.ctlVal on the Breaker Control Logic. These signals force a breaker 1 three-phase trip or close control while the operand selected by setting XCBR1 ST.LOC OPERAND is not active.

"sbo" here is select-before-operate. Enhanced security means that the UR reports to the client the breaker 1 position at the end of the command sequence.

XCBR1 Pos sboTimeout

Range: 2 to 60 s in steps of 1 s
Default: 30 s

This setting specifies the maximum time between a select and an operate command to breaker 1 signal marked Bkr0XCBR1.Pos.ctlVal in order for the operand to be successful. This setting is only relevant when XCBR1 Pos ctlModel is sbo-with-normal-security or sbo-with-enhanced-security.

XCBR1 BlkOpn ctlModel

Range: status-only, direct-with-normal-security, sbo-with-normal-security
Default: direct-with-normal-security

This setting selects the control model clients must use to successfully control the breaker 1 signal marked Bkr0XCBR1.BlkOpn.ctlVal on the Breaker Control Logic. This signal when true blocks breaker 1 trip control while the operand selected by setting XCBR1 ST.LOC OPERAND is not active.

XCBR1 BlkCls ctlModel

Range: status-only, direct-with-normal-security, sbo-with-normal-security
Default: direct-with-normal-security

This setting selects the control model clients must use to successfully control the breaker 1 signal marked Bkr0XCBR1.BlkCls.ctlVal signal on the Breaker Control Logic. This signal when true blocks breaker 1 close control while the operand selected by setting XCBR1 ST.LOC OPERAND is not active.

CSWI1 CmdBlk ctlModel

Range: status-only, direct-with-normal-security, sbo-with-normal-security
Default: direct-with-normal-security

This setting determines the initial IEC 61850 control model (ctlModel) values for CmdBlk DataObjects in the CSWI logical node.

CSWI1 Pos ctlModel

Range: status-only, direct-with-normal-security, sbo-with-normal-security, direct-with-enhanced-security, sbo-with-enhanced-security
Default: direct-with-normal-security

This setting selects the control model clients must use to successfully control the breaker 1 signals marked BkrCSWI1.Pos.ctlVal on the Breaker Control Logic. These signals force a breaker 1 three-phase trip or close control while the operand selected by setting XCBR1 ST.LOC OPERAND is not active.

CSWI1 Pos sboTimeout

Range: 2 to 60 s in steps of 1 s
Default: 30 s

This setting specifies the maximum time between a select and an operate command to breaker 1 via BkrCSWI1.Pos in order for the operand to be successful. This setting is only relevant when CSWI1 Pos ctlModel is sbo-with-normal-security or sbo-with-enhanced-security.

CSWI1 Pos operTimeout

Range: 0.000 to 2.000 s in steps of 0.001s
Default: 0.100 s

This setting applies to IEC 61850 Edition 2.

This setting specifies the maximum time between an operate command to breaker 1 via BkrCSWI1.Pos until BkrCSWI1.Pos.stVal enters the commanded state. The command terminates if the commanded state is not reached in the set time.

CSWI1 BlkOpn ctlModel

Range: status-only, direct-with-normal-security, sbo-with-normal-security
Default: direct-with-normal-security

This setting determines the initial IEC 61850 control model (ctlModel) values for BlkOpn DataObjects in the CSWI logical node.

CSWI1 BlkCls ctlModel

Range: status-only, direct-with-normal-security, sbo-with-normal-security
Default: direct-with-normal-security

This setting determines the initial IEC 61850 control model (ctlModel) values for BlkCls DataObjects in the CSWI logical node.

CSWI1 TagOn ctlModel

Range: status-only, direct-with-normal-security, sbo-with-normal-security, direct-with-enhanced-security, sbo-with-enhanced-security
Default: direct-with-normal-security

This setting determines the initial IEC 61850 control model (ctlModel) values for the TagOn data object in the CSWI logical node. The IEC 61850 client must issue the control request on TagOn data object as per the selected control mode, in order to tag/remove the tag on respective breaker element.

Switches

The UR disconnect switch control and status monitoring elements have certain settings that configure how the IEC 61850 protocol interacts with these elements. These settings are described in this section. See the Settings > System Setup > Disconnect Switches section later in this chapter for details on the operation of the disconnect switch control elements.

Navigate to **Settings > Product Setup > Communications > IEC 61850 > System Setup > Switches > Switch 1** to access the settings that configure the IEC 61850 protocol interface with the first disconnect switch control and status monitoring element. The settings and functionality for the others are similar.

Figure 5-43: Switch panel

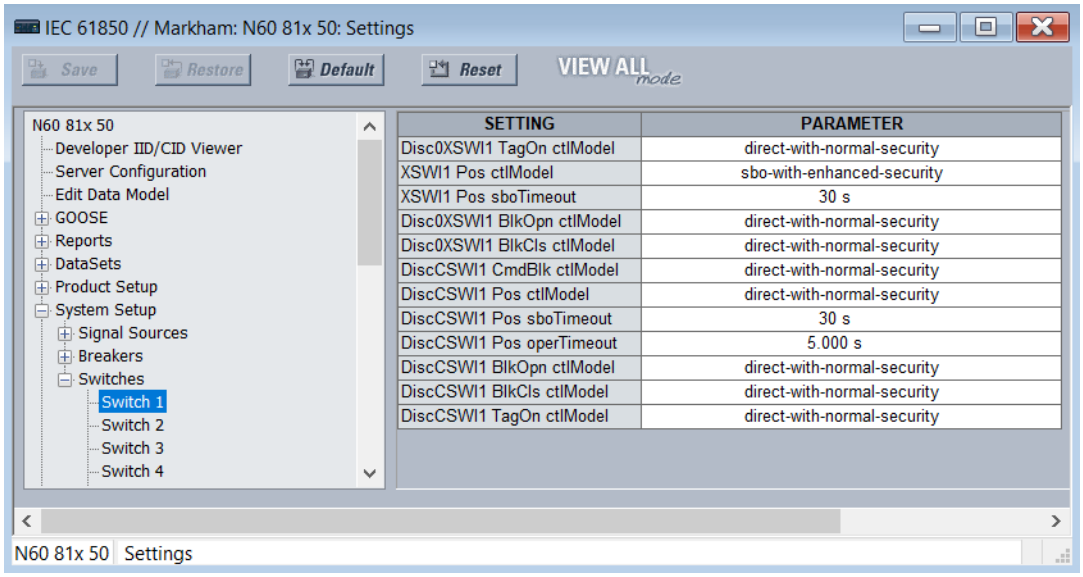

Disc0XSWI1 TagOn ctlModel

Range: status-only, direct-with-normal-security, sbo-with-normal-security, direct-with-enhanced-security, sbo-with-enhanced-security

Default: direct-with-normal-security

This setting determines the initial IEC 61850 control model (ctlModel) values for the TagOn data object in the XSWI logical node. The IEC 61850 client must issue the control request on TagOn data object as per the selected control mode, in order to tag/remove the tag on respective switch element.

XSWI1 Pos ctlModel

Range: status-only, direct-with-normal-security, sbo-with-normal-security, direct-with-enhanced-security, sbo-with-enhanced-security

Default: sbo-with-enhanced-security

This setting selects the control model that clients must use to successfully control the disconnect switch 1 signal marked Disc0XCBR1.Pos.ctlVal on the Disconnect Switch Logic diagram. These signals force a disconnect switch trip or close control while the operand selected by setting XSWI1 ST.LOC OPERAND is not active.

"sbo" here is select-before-operate. Enhanced security means that the N60 reports to the client the disconnect switch 1 position the end of the command sequence.

XSWI1 Pos sboTimeout

Range: 2 to 60 s in steps of 1 s

Default: 30 s

This setting specifies the maximum time between a select and an operate command to disconnect switch 1 signal marked Disc0XCBR1.Pos.ctlVal in order for the operand to be successful. This setting is only relevant when XSWI1 Pos ctlModel is sbo-with-normal-security or sbo-with-enhanced-security.

Disc0XSWI1 BlkOpn ctlModel

Range: status-only, direct-with-normal-security, sbo-with-normal-security

Default: direct-with-normal-security

This setting selects the control model clients must use to successfully control the disconnect switch 1 signal marked DiscCSWI1.BlkOpn.ctlVal signal on the Disconnect Switch Logic diagram in the Settings > System Setup section later. This signal when true blocks disconnect switch 1 trip control while the operand selected by setting XSWI1 ST.LOC OPERAND is not active.

Disc0XSWI1 BlkCls ctlModel

Range: status-only, direct-with-normal-security, sbo-with-normal-security

Default: direct-with-normal-security

This setting selects the control model clients must use to successfully control the disconnect switch 1 signal marked DiscCSWI1.BlkCls.ctlVal signal on the Disconnect Switch Logic diagram in the Settings > System Setup section later. This signal when true blocks disconnect switch 1 close control while the operand selected by setting XSWI1 ST.LOC OPERAND is not active.

DiscCSWI1 Pos ctlModel

Range: status-only, direct-with-normal-security, sbo-with-normal-security, direct-with-enhanced-security, sbo-with-enhanced-security

Default: direct-with-normal-security

This setting selects the control model clients must use to successfully control the disconnect switch 1 signal marked DiscCSWI1.Pos.ctlVal on the Disconnect Switch Logic diagram. These signals force a disconnect switch trip or close control while the operand selected by setting XSWI1 ST.LOC OPERAND is not active.

DiscCSWI1 Pos sboTimeout

Range: 2 to 60 s in steps of 1 s

Default: 30 s

This setting specifies the maximum time between a select and an operate command to disconnect switch 1 via DiscCSWI1.Pos in order for the operand to be successful. This setting is only relevant when CSWI1 Pos ctlModel is sbo-with-normal-security or sbo-with-enhanced-security.

DiscCSWI1 Pos operTimeout

Range: 0.000 to 65.535 s in steps of 0.001s

Default: 5.000 s

This setting specifies the maximum time between an operate command to disconnect switch 1 via DiscCSWI1.Pos until DiscCSWI1.Pos.stVal enters the commanded state. The command terminates if the commanded state is not reached in the set time.

DiscCSWI1 TagOn ctlModel

Range: status-only, direct-with-normal-security, sbo-with-normal-security, direct-with-enhanced-security, sbo-with-enhanced-security

Default: direct-with-normal-security

This setting determines the initial IEC 61850 control model (ctlModel) values for the TagOn data object in the CSWI logical node. The IEC 61850 client must issue the control request on TagOn data object as per the selected control mode, in order to tag/remove the tag on the respective switch element.

Setting Groups

The UR implements a setting groups element as detailed in the Control Elements > Setting Groups section of this chapter. The active setting group and the setting group open for edits can be selected via MMS commands SelectActiveSG and SelectEditSG. The setting related to these IEC 61850 commands are described here.

Navigate to **Settings > Product Setup > Communications > IEC 61850 > Control Elements > Setting Groups** to access the setting that configures the IEC 61850 setting group commands.

Figure 5-44: Setting Groups panel (Edition 2)

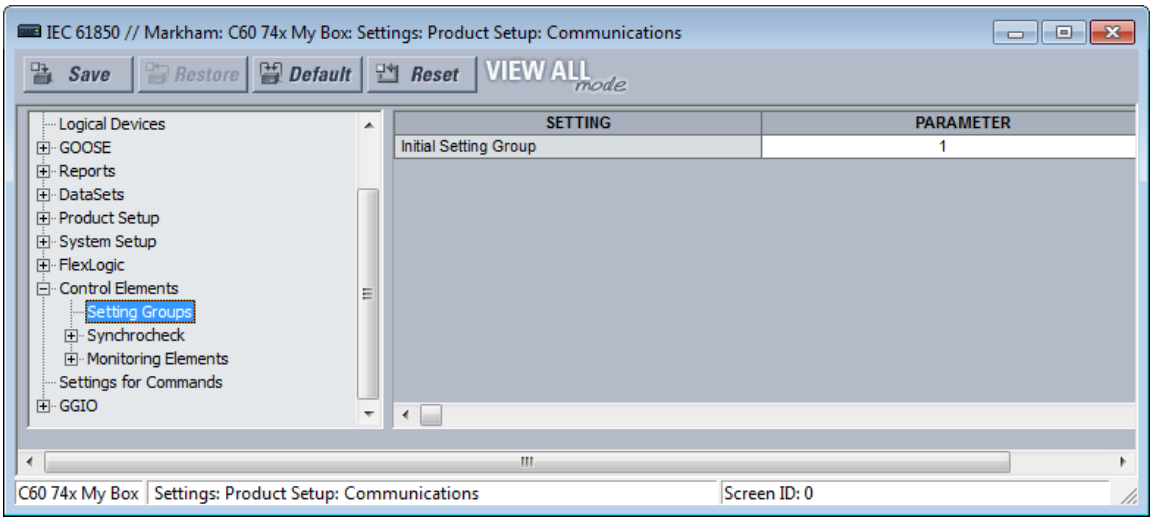

Initial Setting Group

Range: 1 to 6 in steps of 1

Default: 1

The entered value sets the initial value of the non-volatile register normally controlled by the service SelectActiveSG. This initialization occurs only on the UR reboot immediately following the receipt of a valid CID file.

This setting is not mapped into the IEC 61850 information model, but sets the value of SettingControl element attribute actSG in SCL files.

The **Initial Setting Group** value is initialized when **Control Elements > Setting Groups > Control Mode** is set to "IEC61850 Client." When **Control Elements > Setting Groups > Control Mode** is set to "Local," the **Initial Setting Group** value is ignored, and the priority scheme selects the Active setting group immediately after initialization.

Commands

The UR implements a number of clear records commands as detailed in the Commands and Targets chapter of this manual. Several of these commands also can be issued via IEC 61850. The settings related to these IEC 61850 commands are described here.

Navigate to **Settings > Product Setup > Communications > IEC 61850 > Settings for Commands** to access the settings that configure the IEC 61850 protocol interface for record clear commands. The content varies with relay capability.

Figure 5-45: Commands panel (Edition 2)

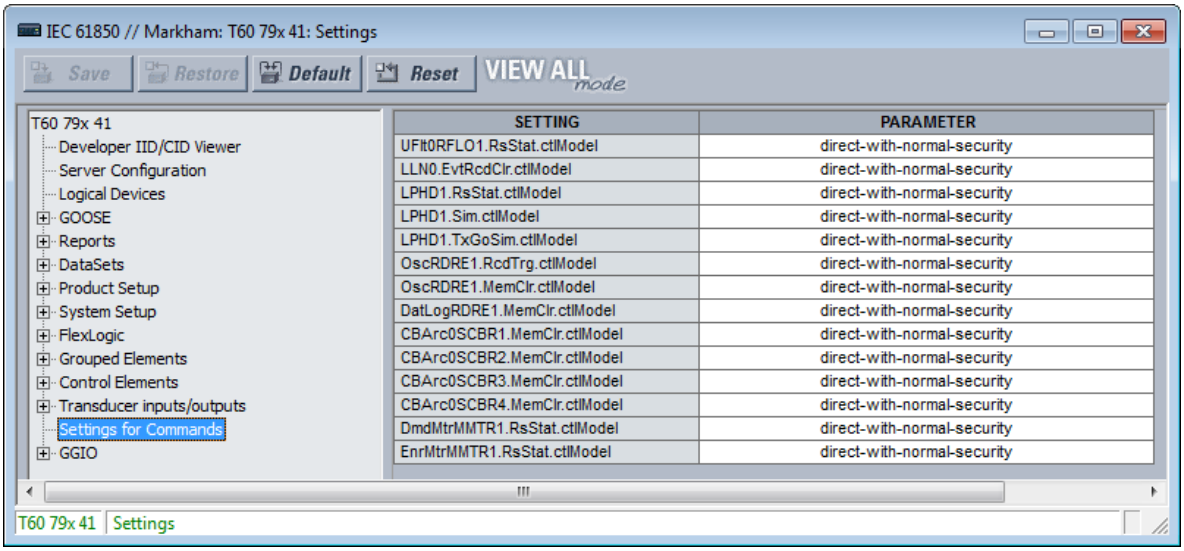

SETTING	PARAMETER
UFlt0RFLO1.RsStat.ctlModel	direct-with-normal-security
LLN0.EvtRcdClr.ctlModel	direct-with-normal-security
LPHD1.RsStat.ctlModel	direct-with-normal-security
LPHD1.Sim.ctlModel	direct-with-normal-security
LPHD1.TxGoSim.ctlModel	direct-with-normal-security
OscRDRE1.RcdTrg.ctlModel	direct-with-normal-security
OscRDRE1.MemClr.ctlModel	direct-with-normal-security
DatLogRDRE1.MemClr.ctlModel	direct-with-normal-security
CBArc0SCBR1.MemClr.ctlModel	direct-with-normal-security
CBArc0SCBR2.MemClr.ctlModel	direct-with-normal-security
CBArc0SCBR3.MemClr.ctlModel	direct-with-normal-security
CBArc0SCBR4.MemClr.ctlModel	direct-with-normal-security
DmdMtrMMTR1.RsStat.ctlModel	direct-with-normal-security
EnrMtrMMTR1.RsStat.ctlModel	direct-with-normal-security

UFltRptRFLO1.RsStat.ctlModel

Range: direct-with-normal-security, sbo-with-normal-security
Default: direct-with-normal-security

This setting selects the control model clients must use to successfully control the command CLEAR FAULT REPORTS. "sbo" here is select-before-operate. Enhanced security means that the N60 reports to the client the breaker 1 position at the end of the command sequence.

LLN0.EvtRcdClr.ctlModel

Range: direct-with-normal-security, sbo-with-normal-security
Default: direct-with-normal-security

This setting selects the control model clients must use to successfully control the command CLEAR EVENT RECORDS.

LPHD1.RsStat.ctlModel

Range: direct-with-normal-security, sbo-with-normal-security
Default: direct-with-normal-security

This setting selects the control model clients must use to successfully control the command CLEAR ALL RELAY RECORDS.

LPHD1.Sim.ctlModel

Range: direct-with-normal-security, sbo-with-normal-security
Default: direct-with-normal-security

This is a command that can be issued via MMS client to enable simulation mode in the relay.

Enabling the **SIM CTRL VIA MMS** setting allows this MMS command to be accepted by the relay.

LPHD1.TxGoSim.ctlModel

Range: direct-with-normal-security, sbo-with-normal-security
Default: direct-with-normal-security

This MMS command enables TxGOOSE sim Mode.

The sim attribute is set to TRUE in the published GOOSE frames from the relay so that the UR plays the simulator role during the testing and commissioning phases.

OscRDRE1.RcdTrg.ctlModel

Range: direct-with-normal-security, sbo-with-normal-security
Default: direct-with-normal-security

This setting selects the control model clients must use to successfully control the command FORCE TRIGGER.

OscRDRE1.MemClr.ctlModel

Range: direct-with-normal-security, sbo-with-normal-security
Default: direct-with-normal-security

This setting selects the control model clients must use to successfully control the command CLEAR OSCILLOGRAPHY.

DatLogRDRE1.MemClr.ctlModel

Range: direct-with-normal-security, sbo-with-normal-security
Default: direct-with-normal-security

This setting selects the control model clients must use to successfully control the command CLEAR DATA LOGGER.

CBArc0SCBR1.MemClr.ctlModel

Range: direct-with-normal-security, sbo-with-normal-security
Default: direct-with-normal-security

This setting selects the control model clients must use to successfully control the command CLEAR ARC AMPS 1.

DmdMtrMMTR1.RsStat.ctlModel

Range: direct-with-normal-security, sbo-with-normal-security
Default: direct-with-normal-security

This setting selects the control model clients must use to successfully control the command CLEAR DEMAND.

EnrMtrMMTR1.RsStat.ctlModel

Range: direct-with-normal-security, sbo-with-normal-security
Default: direct-with-normal-security
This setting selects the control model clients must use to successfully control the command CLEAR ENERGY.

GGIO1

GGIO1 is a logical node that allows up to 128 UR FlexLogic operands to be user-mapped to IEC 61850 information model data attributes.

For the value of a FlexLogic operand to be read via MMS, included in TxGOOSE messages, or included in buffered/unbuffered reports, the value must be assigned to a data attribute. GGIO1 allows those FlexLogic operands that have not yet been factory-assigned to a data attribute to be user-assigned to a generic data attribute, and thus have their values included in IEC 61850 communications.

Navigate to **Settings > Product Setup > Communications > IEC 61850 > GGIO > GGIO1** to access the settings for GGIO1.

Figure 5-46: IEC 61850 GGIO1 panel (Edition 2)

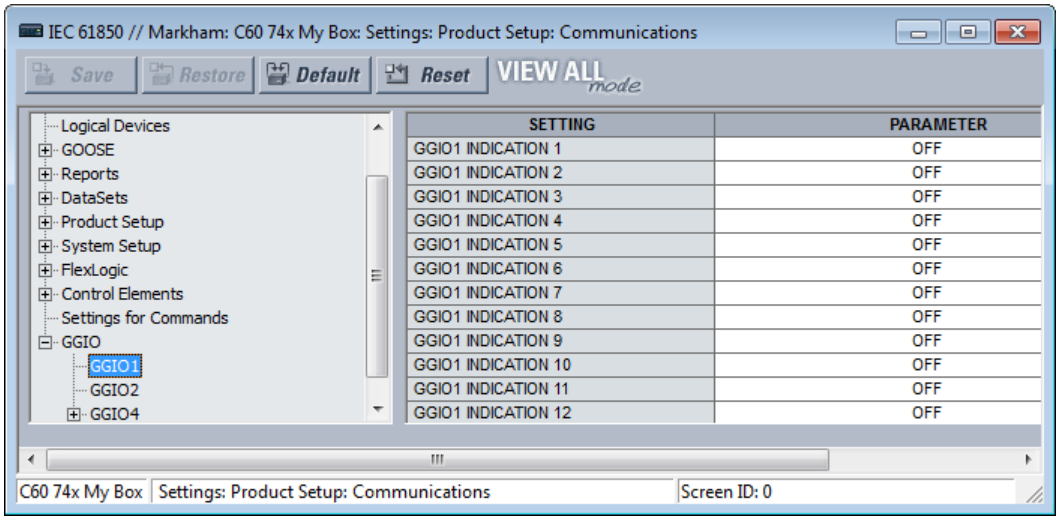

GGIO1 INDICATION 1

Range: any FlexLogic operand
Default: OFF

This setting selects the FlexLogic operand whose value is mapped into the IEC 61850 data attribute <LDName>/GGIO1.Ind001.stVal. See the FlexLogic section in this chapter for a list of FlexLogic operands.

GGIO1 INDICATION 2

Range: any FlexLogic operand
Default: OFF

Selects the FlexLogic operand mapped to <LDName>/GGIO1.Ind002.stVal, and so on.

GGIO2

Virtual Inputs are controllable FlexLogic operands that can be controlled via IEC 61850 commands to GGIO2, by DNP, by Modbus, and by the UR front panel. The settings related to these IEC 61850 commands are described here.

Navigate to **Settings > Product Setup > Communications > IEC 61850 > GGIO > GGIO2** to access the settings that configure the IEC 61850 protocol interface for Virtual Input commands.

Figure 5-47: GGIO2 panel (Edition 2)

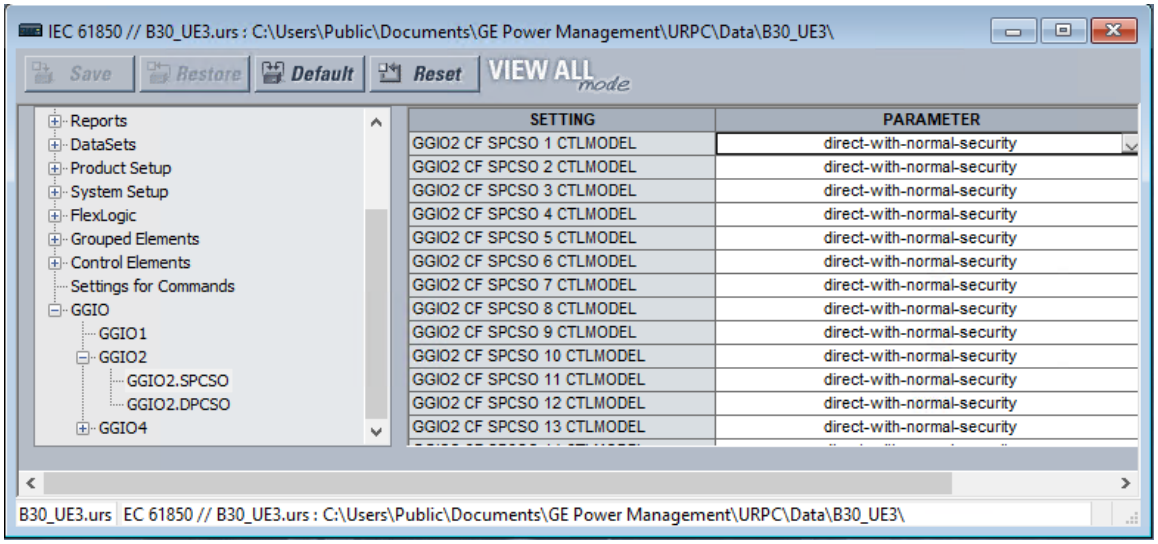

GGIO2 CF SPCSO 1...128 CTLMODEL

Range: status-only, direct-with-normal-security, sbo-with-normal-security
Default: direct-with-normal-security

This setting selects the control model clients must use to successfully control Virtual Input 1...128. “sbo” here is select-before-operate.

In firmware version 8.40 and above, GGIO2 dual control point numbers 01 to 64 have been introduced. DPCSO1 to DPCSO64 are double control points mapped to the Virtual operate pairs and operate on pairs of Virtual Inputs. One Virtual input of the pair is set to “1” and the other Virtual input of the pair is set to “0”, so DPCSO01 would be mapped to Virtual input pair 1,2, for example and DPCSO02 would be mapped to Virtual inputs pair 3,4.

Typical application of DPCSO is when the external client sends dual-point command, for example, point-1 command to block a function; point-2 command to unblock a function. This point-1 command will correspond to first virtual input to be “1” and second to be “0”; similarly, if point-2 command is received, the first virtual input set to “0”, and second input to be “1”.

NOTE

When both DPCSO control points are set to “0” (false condition), no application action is triggered.

GGIO2 CF DPCSO 1...64 CTLMODEL

Range: status-only, direct-with-normal-security, sbo-with-normal-security

Default: direct-with-normal-security

This setting selects the control model clients must use to successfully control Dual Point Control 1...64. “sbo” here is select-before-operate.

GGIO4

GGIO4 is a logical node that allows up to 32 UR FlexAnalog operands to be user-mapped to an IEC 61850 information model data attribute.

For the value of a FlexAnalog operand to be read via MMS, included in TxGOOSE messages, or included in buffered/unbuffered reports, the value must be assigned to a data attribute. GGIO4 allows those FlexAnalog operands that have not yet been factory-assigned to a data attribute to be user-assigned to a generic data attribute, and thus have their values included in IEC 61850 communications.

Navigate to **Settings > Product Setup > Communications > IEC 61850 > GGIO > GGIO4 > GGIO4.AnIn1** to access the settings for the first GGIO4 value. The settings and functionality for the others are similar.

Figure 5-48: GGIO4 panel (Edition 2)

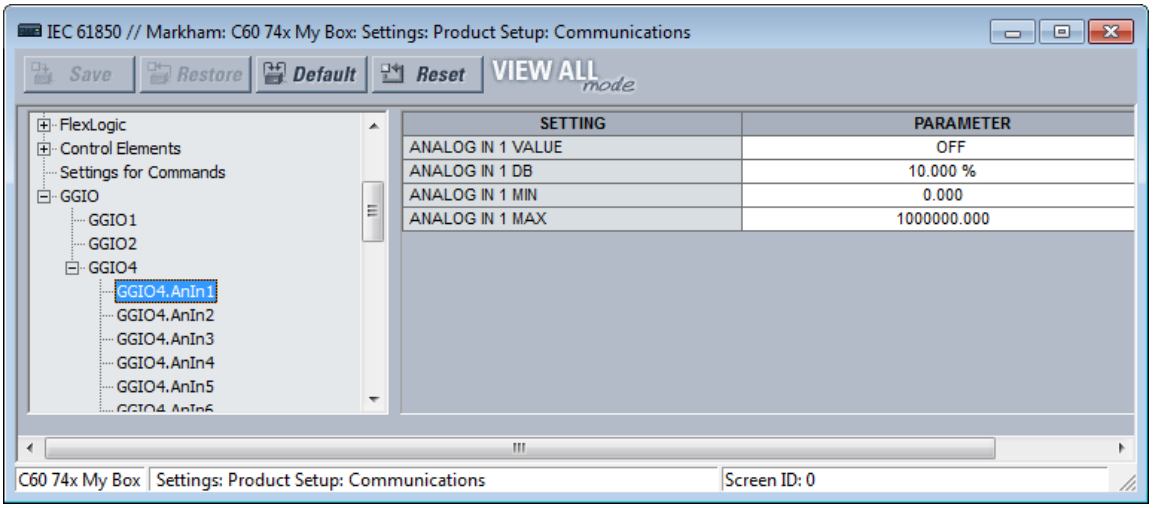

ANALOG IN 1 VALUE

Range: any FlexAnalog operand

Default: OFF

This setting selects the FlexAnalog operand whose value is mapped into the IEC 61850 data attribute <LDName>/GGIO4.AnIn01.instMag.f. The value of the FlexAnalog operand is converted automatically to the format and scaling required by the standard, that is to say primary amperes, primary volts, and so on. See Appendix A for a list of FlexAnalog operands.

ANALOG IN 1 DB

Range: 0.000 to 100.000% in steps of 0.001

Default: 0.000%

This setting specifies the deadband for the **ANALOG IN 1 VALUE**. The deadband is used to determine when to update the deadbanded magnitude from the instantaneous magnitude. The deadband is a percentage of the difference between the "max." and "min." values. Here, the "max." and "min." are as specified by the settings **ANALOG IN 1 MAX** and **ANALOG IN 1 MIN**.

See the Deadband Settings section earlier for a description of deadbanded values.

ANALOG IN 1 MIN

Range: -1000000000.000 to 1000000000.000 in steps of 0.001

Default: 0.000

This setting specifies the "min." value used in deadband calculations. The scaling of this setting is the same as used by <LDName>/GGIO4.AnIn01.instMag.f. This setting is stored as an IEEE 754 / IEC 60559 floating point number. Because of the large range of this setting, not all possible values can be stored. Some values are rounded to the closest possible floating point number.

ANALOG IN 1 MAX

Range: -1000000000.000 to 1000000000.000 in steps of 0.001

Default: 1000000.000

This setting specifies the "max." value used in deadband calculations. The scaling of this setting is the same as used by <LDName>/GGIO4.AnIn01.instMag.f. This setting is stored as an IEEE 754 / IEC 60559 floating point number. Because of the large range of this setting, not all possible values can be stored. Some values are rounded to the closest possible floating point number.

File transfer by IEC 61850

The N60 supports file transfer by IEC 61850. The approach is as follows, using the SISCO AX-S4 61850 client software as an example.

1. In the AX-S4 61850 Explorer window, click the **Tools** menu and access the SISCO File Transfer Utility.
2. Select the **Remote AR Name** from the drop-down list. Available files appear in the **File Specification** area on the right side of the window.
3. With the **Copy** option active, select a file to transfer and click the **Go** button. The file is copied and displays in the **Local** list on the left side of the window.
4. Repeat the process to transfer any other files.

5

Figure 5-49: File transfer by IEC 61850

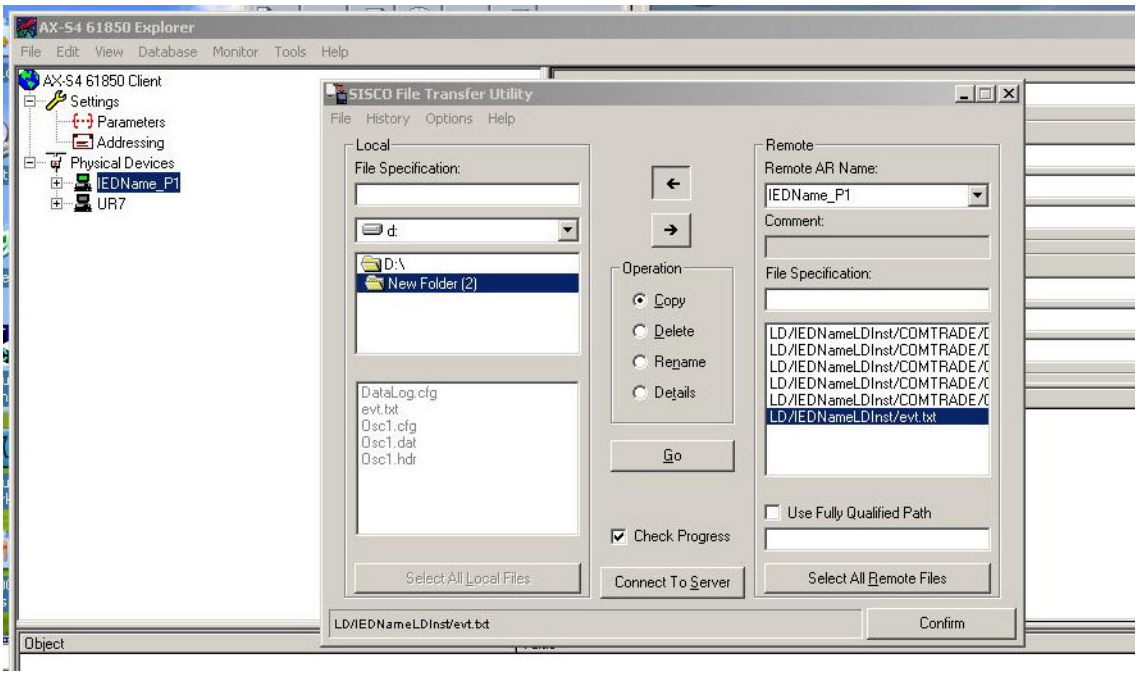

5.3.5.13 Legacy fixed GOOSE

"Fixed GOOSE" is a proprietary, non-standard variation of GSSE/GOOSE used in older UR versions. It uses IEC 61850 GSSE data structures (now deprecated) with modern GOOSE services (including VLAN and priority tagging). Fixed GOOSE is an intermediate step between GSSE and GOOSE. It is not recommended for new designs, but may be appropriate where legacy URs are currently configured to use it.

Legacy fixed GOOSE was supported by UR relays with firmware version 7.20 and below. With the introduction of IEC 61850 Edition 2 in firmware version 7.30, support for the legacy fixed GOOSE protocol was discontinued and UR relays with version 7.30 through 8.30 cannot communicate with relays running firmware version 7.2x and below using the legacy fixed GOOSE. Firmware version 8.40 re-introduces support for the legacy fixed GOOSE. UR relays with firmware version 8.40 and up can communicate to the legacy UR relays (firmware version 7.2x and below) using fixed GOOSE and to relays with newer firmware using configurable GOOSE.

The fixed GOOSE publisher and subscriber functionality is proprietary to GE Grid Solutions, although it does use a similar GOOSE message structure to that specified in IEC 61850 8-1. It is used for implementations that require GOOSE data transfer between UR IEDs. Unlike regular GOOSE, the dataset transferred using the fixed GOOSE contains the DNA and UserSt bit pairs. The FlexLogic operands that determine the state of the DNA and UserSt bit pairs are configurable via settings, but the fixed GOOSE dataset always contains the same DNA and UserSt data structure. For fixed GOOSE subscription, the configuration of remote devices and remote inputs is outside the IEC 61850 screen.

Publisher settings

Figure 5-50: Fixed GOOSE Tx configuration

Fixed GOOSE // New.urs : D:\UR\840\Settings\New\: Product Setup: Communications

Save | Restore | Default | Reset | VIEW ALL mode

TX CONFIGURATION					
General	PARAMETER				
Default Update Time	60				
GOOSE Function	Disabled				
GOOSE ID	GOOSEOut				
Destination MAC	01 00 00 00 00 00				
GOOSE VLAN PRIORITY	4				
GOOSE VLAN ID	0				
GOOSE ETYPE APPID	0				
DNA/UserSt Bit Pairs	OPERAND	EVENTS		OPERAND	EVENTS
DNA 1	OFF	Disabled	UserSt 1	OFF	Disabled
DNA 2	OFF	Disabled	UserSt 2	OFF	Disabled
DNA 3	OFF	Disabled	UserSt 3	OFF	Disabled
DNA 4	OFF	Disabled	UserSt 4	OFF	Disabled
DNA 5	OFF	Disabled	UserSt 5	OFF	Disabled
DNA 6	OFF	Disabled	UserSt 6	OFF	Disabled
DNA 7	OFF	Disabled	UserSt 7	OFF	Disabled
DNA 8	OFF	Disabled	UserSt 8	OFF	Disabled
DNA 9	OFF	Disabled	UserSt 9	OFF	Disabled
DNA 10	OFF	Disabled	UserSt 10	OFF	Disabled
DNA 11	OFF	Disabled	UserSt 11	OFF	Disabled
DNA 12	OFF	Disabled	UserSt 12	OFF	Disabled
DNA 13	OFF	Disabled	UserSt 13	OFF	Disabled
DNA 14	OFF	Disabled	UserSt 14	OFF	Disabled
DNA 15	OFF	Disabled	UserSt 15	OFF	Disabled
DNA 16	OFF	Disabled	UserSt 16	OFF	Disabled
DNA 17	OFF	Disabled	UserSt 17	OFF	Disabled
DNA 18	OFF	Disabled	UserSt 18	OFF	Disabled
DNA 19	OFF	Disabled	UserSt 19	OFF	Disabled
DNA 20	OFF	Disabled	UserSt 20	OFF	Disabled
DNA 21	OFF	Disabled	UserSt 21	OFF	Disabled
DNA 22	OFF	Disabled	UserSt 22	OFF	Disabled
DNA 23	OFF	Disabled	UserSt 23	OFF	Disabled
DNA 24	OFF	Disabled	UserSt 24	OFF	Disabled
DNA 25	OFF	Disabled	UserSt 25	OFF	Disabled
DNA 26	OFF	Disabled	UserSt 26	OFF	Disabled
DNA 27	OFF	Disabled	UserSt 27	OFF	Disabled
DNA 28	OFF	Disabled	UserSt 28	OFF	Disabled
DNA 29	OFF	Disabled	UserSt 29	OFF	Disabled
DNA 30	OFF	Disabled	UserSt 30	OFF	Disabled
DNA 31	OFF	Disabled	UserSt 31	OFF	Disabled
DNA 32	OFF	Disabled	UserSt 32	OFF	Disabled
RX CONFIGURATION					
Remote Devices	ID	ETYPE APPID	DATASET	DST MAC	
Remote Inputs	NAME	REMOTE DEVICE	ITEM	DEFAULT STATE	EVENTS

New.urs Product Setup: Communications

DEFAULT UPDATE TIME

Range: 1 to 60 s in steps of 1

Default: 60 s

Sets the time between fixed GOOSE messages when there are no DNA and UserSt bit pair state changes to be sent. When DNA and UserSt data changes, fixed GOOSE messages are sent immediately. This setting specifies the steady-state heartbeat time interval.

GOOSE FUNCTION

Range: Enabled, Disabled

Default: Disabled

This setting enables or disables the sending of fixed GOOSE messages.

GOOSE ID

Range: 65-character ASCII string
Default: GOOSEOut

This setting represents the IEC 61850 GOOSE application ID (GoID) name string sent as part of fixed GOOSE message. This string uniquely identifies the GOOSE message at the receiving device.

DESTINATION MAC

Range: any 12-digit multicast MAC value
Default: 01 00 00 00 00 00

This setting specifies the Ethernet destination Media Access Control (MAC) address in published fixed GOOSE messages. The destination MAC address must be a multicast address. The second digit of the first octet must be an odd number. Transmitted messages will have the multicast bit set to TRUE.

GOOSE VLAN PRIORITY

Range: 0 to 7 in steps of 1
Default: 4

This setting indicates the Ethernet priority of GOOSE messages. This allows GOOSE messages to have higher priority than other Ethernet data. Network devices may forward a message with a higher priority value before a message with a lower priority value, which can expedite the delivery of high priority messages on heavily loaded networks.

GOOSE VLAN ID

Range: 0 to 4095 in steps of 1
Default: 0

The entered value sets the VID value in the IEEE 802.1Q VLAN tag included in published fixed GOOSE messages. VID may be used by network devices to direct messages to only selected devices, reduces the network burden.

GOOSE ETYPE APPID

Range: 0 to 16383 in steps of 1
Default: 0

The entered value sets the APPID value in published fixed GOOSE messages and is used by subscribers to discriminate between other fixed GOOSE messages.

DNA Bit pairs

Remote outputs DNA bit pairs (1 to 32) are FlexLogic operands inserted into fixed GOOSE messages that are transmitted to remote devices on a LAN. Each digital point in the message must be programmed to carry the state of a specific FlexLogic operand selected using the DNA bit pair.

DNA-1 OPERAND

Range: Any FlexLogic operand
Default: Off

DNA-1 EVENTS

Range: Enabled, Disabled
Default: Disabled

UserSt Bit Pairs

Remote outputs UserSt bit pairs (1 to 32) are FlexLogic operands inserted into fixed GOOSE messages that are transmitted to remote devices on a LAN. Each digital point in the message must be programmed to carry the state of a specific FlexLogic operand selected using the UserSt bit pair.

UserSt-1 OPERAND

Range: Any FlexLogic operand
Default: Off

UserSt-1 EVENTS

Range: Enabled, Disabled
Default: Disabled

Subscriber settings

Figure 5-51: Fixed GOOSE Rx configuration

TX CONFIGURATION					
General	PARAMETER				
DNA/UserSt Bit Pairs	OPERAND	EVENTS		OPERAND	EVENTS
RX CONFIGURATION					
Remote Devices	ID	ETYPE APPID	DATASET	DST MAC	
Remote Device 1	Remote Device 1	0	Fixed	00 00 00 00 00 00	
Remote Device 2	Remote Device 2	0	Fixed	00 00 00 00 00 00	
Remote Device 3	Remote Device 3	0	Fixed	00 00 00 00 00 00	
Remote Device 4	Remote Device 4	0	Fixed	00 00 00 00 00 00	
Remote Device 5	Remote Device 5	0	Fixed	00 00 00 00 00 00	
Remote Device 6	Remote Device 6	0	Fixed	00 00 00 00 00 00	
Remote Device 7	Remote Device 7	0	Fixed	00 00 00 00 00 00	
Remote Device 8	Remote Device 8	0	Fixed	00 00 00 00 00 00	
Remote Device 9	Remote Device 9	0	Fixed	00 00 00 00 00 00	
Remote Device 10	Remote Device 10	0	Fixed	00 00 00 00 00 00	
Remote Device 11	Remote Device 11	0	Fixed	00 00 00 00 00 00	
Remote Device 12	Remote Device 12	0	Fixed	00 00 00 00 00 00	
Remote Device 13	Remote Device 13	0	Fixed	00 00 00 00 00 00	
Remote Device 14	Remote Device 14	0	Fixed	00 00 00 00 00 00	
Remote Device 15	Remote Device 15	0	Fixed	00 00 00 00 00 00	
Remote Device 16	Remote Device 16	0	Fixed	00 00 00 00 00 00	
Remote Inputs	NAME	REMOTE DEVICE	ITEM	DEFAULT STATE	EVENTS
Remote Input 1	Remote Ip 1	Remote Device 1	None	Off	Disabled
Remote Input 2	Remote Ip 2	Remote Device 1	None	Off	Disabled
Remote Input 3	Remote Ip 3	Remote Device 1	None	Off	Disabled
Remote Input 4	Remote Ip 4	Remote Device 1	None	Off	Disabled
Remote Input 5	Remote Ip 5	Remote Device 1	None	Off	Disabled
Remote Input 6	Remote Ip 6	Remote Device 1	None	Off	Disabled
Remote Input 7	Remote Ip 7	Remote Device 1	None	Off	Disabled
Remote Input 8	Remote Ip 8	Remote Device 1	None	Off	Disabled
Remote Input 9	Remote Ip 9	Remote Device 1	None	Off	Disabled
Remote Input 10	Remote Ip 10	Remote Device 1	None	Off	Disabled
Remote Input 11	Remote Ip 11	Remote Device 1	None	Off	Disabled
Remote Input 12	Remote Ip 12	Remote Device 1	None	Off	Disabled
Remote Input 13	Remote Ip 13	Remote Device 1	None	Off	Disabled
Remote Input 14	Remote Ip 14	Remote Device 1	None	Off	Disabled
Remote Input 15	Remote Ip 15	Remote Device 1	None	Off	Disabled
Remote Input 16	Remote Ip 16	Remote Device 1	None	Off	Disabled
Remote Input 17	Remote Ip 17	Remote Device 1	None	Off	Disabled
Remote Input 18	Remote Ip 18	Remote Device 1	None	Off	Disabled
Remote Input 19	Remote Ip 19	Remote Device 1	None	Off	Disabled
Remote Input 20	Remote Ip 20	Remote Device 1	None	Off	Disabled
Remote Input 21	Remote Ip 21	Remote Device 1	None	Off	Disabled
Remote Input 22	Remote Ip 22	Remote Device 1	None	Off	Disabled
Remote Input 23	Remote Ip 23	Remote Device 1	None	Off	Disabled
Remote Input 24	Remote Ip 24	Remote Device 1	None	Off	Disabled
Remote Input 25	Remote Ip 25	Remote Device 1	None	Off	Disabled
Remote Input 26	Remote Ip 26	Remote Device 1	None	Off	Disabled
Remote Input 27	Remote Ip 27	Remote Device 1	None	Off	Disabled
Remote Input 28	Remote Ip 28	Remote Device 1	None	Off	Disabled
Remote Input 29	Remote Ip 29	Remote Device 1	None	Off	Disabled
Remote Input 30	Remote Ip 30	Remote Device 1	None	Off	Disabled
Remote Input 31	Remote Ip 31	Remote Device 1	None	Off	Disabled
Remote Input 32	Remote Ip 32	Remote Device 1	None	Off	Disabled
Remote Input 33	Remote Ip 33	Remote Device 1	None	Off	Disabled
Remote Input 34	Remote Ip 34	Remote Device 1	None	Off	Disabled
Remote Input 35	Remote Ip 35	Remote Device 1	None	Off	Disabled
Remote Input 36	Remote Ip 36	Remote Device 1	None	Off	Disabled
Remote Input 37	Remote Ip 37	Remote Device 1	None	Off	Disabled
Remote Input 38	Remote Ip 38	Remote Device 1	None	Off	Disabled
Remote Input 39	Remote Ip 39	Remote Device 1	None	Off	Disabled
Remote Input 40	Remote Ip 40	Remote Device 1	None	Off	Disabled
Remote Input 41	Remote Ip 41	Remote Device 1	None	Off	Disabled
Remote Input 42	Remote Ip 42	Remote Device 1	None	Off	Disabled
Remote Input 43	Remote Ip 43	Remote Device 1	None	Off	Disabled
Remote Input 44	Remote Ip 44	Remote Device 1	None	Off	Disabled
Remote Input 45	Remote Ip 45	Remote Device 1	None	Off	Disabled
Remote Input 46	Remote Ip 46	Remote Device 1	None	Off	Disabled
Remote Input 47	Remote Ip 47	Remote Device 1	None	Off	Disabled
Remote Input 48	Remote Ip 48	Remote Device 1	None	Off	Disabled
Remote Input 49	Remote Ip 49	Remote Device 1	None	Off	Disabled
Remote Input 50	Remote Ip 50	Remote Device 1	None	Off	Disabled
Remote Input 51	Remote Ip 51	Remote Device 1	None	Off	Disabled
Remote Input 52	Remote Ip 52	Remote Device 1	None	Off	Disabled
Remote Input 53	Remote Ip 53	Remote Device 1	None	Off	Disabled
Remote Input 54	Remote Ip 54	Remote Device 1	None	Off	Disabled
Remote Input 55	Remote Ip 55	Remote Device 1	None	Off	Disabled
Remote Input 56	Remote Ip 56	Remote Device 1	None	Off	Disabled
Remote Input 57	Remote Ip 57	Remote Device 1	None	Off	Disabled
Remote Input 58	Remote Ip 58	Remote Device 1	None	Off	Disabled
Remote Input 59	Remote Ip 59	Remote Device 1	None	Off	Disabled
Remote Input 60	Remote Ip 60	Remote Device 1	None	Off	Disabled
Remote Input 61	Remote Ip 61	Remote Device 1	None	Off	Disabled
Remote Input 62	Remote Ip 62	Remote Device 1	None	Off	Disabled
Remote Input 63	Remote Ip 63	Remote Device 1	None	Off	Disabled
Remote Input 64	Remote Ip 64	Remote Device 1	None	Off	Disabled

Remote Devices

A receiving relay must be programmed to capture messages originating from the remote devices using the remote devices and remote input settings.

REMOTE DEVICE 1 ID

Range: Up to 65 alphanumeric characters
Default: Remote Device 1

This setting allows the user to assign descriptive text to the remote device.

REMOTE DEVICE 1 DST MAC

Range: Any 12-digit hexadecimal number
Default: 00 00 00 00 00 00

This setting identifies the destination MAC address of the received GOOSE message. This setting must match the value of the publisher's **DESTINATION MAC**. Fixed GOOSE messages having destination MAC address equal to this value are accepted as valid.

REMOTE DEVICE 1 ETYPE APPID

Range: 0 to 16383 in steps of 1
Default: 0

This setting identifies the Ethernet application identification in the GOOSE message. It should match the corresponding settings on the sending device.

REMOTE DEVICE 1 DATASET

Range: Fixed (Read only)
Default: Fixed

This setting is read only with value “Fixed”.

Remote inputs create FlexLogic operands at the receiving relay that are extracted from the received fixed GOOSE messages. Each remote input can be selected from a list consisting of: DNA-1...32, UserSt-1...32.

REMOTE INPUT 1 ID

Range: Up to 12 alphanumeric characters
Default: Rem Ip 1

This setting allows the user to assign descriptive text to the remote input.

REMOTE IN 1 DEVICE

Range: Remote Device 1...16
Default: Remote Device 1

This setting selects the remote device which originates the required signal, as previously assigned to the remote device via the **REMOTE DEVICE (16)** settings.

REMOTE IN 1 ITEM

Range: None, DNA-1...32, UserSt-1...32
Default: None

This setting selects the specific bits of the received fixed GOOSE message to be mapped to that Remote Input.

REMOTE IN 1 DEFAULT STATE

Range: On, Off, Latest/On, Latest/Off
Default: Off

This setting selects the logic state for this point if the local relay has just completed start-up or the remote device sending the point is declared to be non-communicating. The following choices are available:

- Setting **REMOTE IN 1 DEFAULT STATE** to “On” defaults the input to logic 1.
- Setting **REMOTE IN 1 DEFAULT STATE** to “Off” value defaults the input to logic 0.
- Setting **REMOTE IN 1 DEFAULT STATE** to “Latest/On” freezes the input in case of lost communications. If the latest state is not known, such as after relay power-up but before the first communication exchange, the input will default to logic 1.
  When communication resumes, the input becomes fully operational.

– Setting **REMOTE IN 1 DEFAULT STATE** to "Latest/Off" freezes the input in case of lost communications. If the latest state is not known, such as after relay power-up but before the first communication exchange, the input will default to logic 0.
When communication resumes, the input becomes fully operational.

5.3.5.14 Web server HTTP protocol

SETTINGS ⇨ PRODUCT SETUP ⇨⇩ COMMUNICATIONS ⇨⇩ WEB SERVER HTTP PROTOCOL

■ WEB SERVER ■ HTTP PROTOCOL	⇔	HTTP TCP PORT NUMBER(80): 80	Range: 0 to 65535 in steps of 1

The N60 contains an embedded web server and can display pages in a web browser. The web pages are organized as a series of menus that can be accessed starting at the N60 "Main Menu." Web pages are read-only and are available showing IEC 60870-5-104 points lists, Modbus registers, event records, fault reports, and so on. First connect the N60 and a computer to an Ethernet network, then enter the IP address of the N60 Ethernet port in a web browser.

To close the port, set the port number to 0.

Any change takes effect when the N60 is restarted.

Figure 5-52: Example of UR web page showing event records

GE Multilin

C60 Breaker Relay
Revision 7.31

Relay Name: **Relay-1**
IP Address: **10.14.22.72**

UR

Event Recorder: Last 10 Events

Click Here For The Main Menu

Event Number	Time and Date	Event Cause
214	Nov 04 2014 14:02:56.062087	PROTOTYPE FIRMWARE
213	Nov 04 2014 14:02:56.062087	POWER ON
212	Nov 03 2014 14:00:20.364906	POWER OFF
211	Nov 03 2014 13:55:15.061866	PROTOTYPE FIRMWARE
210	Nov 03 2014 13:55:15.061866	POWER ON
209	Nov 03 2014 13:10:59.733179	POWER OFF
208	Nov 03 2014 13:06:11.062104	PROTOTYPE FIRMWARE
207	Nov 03 2014 13:06:11.062104	POWER ON
206	Oct 31 2014 10:07:25.078203	POWER OFF
205	Oct 31 2014 10:00:44.062027	PROTOTYPE FIRMWARE

NOTE

Do not set more than one protocol to the same TCP/UDP port number, as this results in unreliable operation of those protocols.

5.3.5.15 TFTP protocol

SETTINGS ⇨ PRODUCT SETUP ⇨⇩ COMMUNICATIONS ⇨⇩ TFTP PROTOCOL

■ TFTP PROTOCOL ■	⇔	TFTP MAIN UDP PORT NUMBER(69): 69	Range: 0 to 65535 in steps of 1
	⇩	TFTP DATA UDP PORT 1 NUMBER: 0	Range: 0 to 65535 in steps of 1
	⇧	TFTP DATA UDP PORT 2 NUMBER: 0	Range: 0 to 65535 in steps of 1

The Trivial File Transfer Protocol (TFTP) can be used to transfer files from the N60 over a network. The N60 operates as a TFTP server. TFTP client software is available from various sources, including Microsoft Windows NT. The dir.txt file obtained from the N60 contains a list and description of all available files, for example event records and oscillography.

The "put" function is not for security reasons. You can enter a "get" command but not a "put" command.

TFTP MAIN UDP PORT NUMBER — To close the port, set the port number to 0. Any change takes effect when the N60 is restarted.

NOTE

Do not set more than one protocol to the same TCP/UDP port number, as this results in unreliable operation of those protocols.

5.3.5.16 IEC 60870-5-104 protocol

SETTINGS ⇨ PRODUCT SETUP ⇨⇩ COMMUNICATIONS ⇨⇩ IEC 60870-5-104 PROTOCOL

■ IEC 60870-5-104 ■ PROTOCOL	⇔	IEC TCP PORT NUMBER(2404): 2404	Range: 0 to 65535 in steps of 1
	⇩	■ IEC NETWORK ■ CLIENT ADDRESSES	See below
	⇩	IEC COMMON ADDRESS OF ASDU: 0	Range: 0 to 65535 in steps of 1
	⇩	IEC CYCLIC DATA PERIOD: 60 s	Range: 1 to 65535 s in steps of 1
	⇩	IEC CURRENT DEFAULT THRESHOLD: 30000	Range: 0 to 100000000 in steps of 1
	⇩	IEC VOLTAGE DEFAULT THRESHOLD: 30000	Range: 0 to 100000000 in steps of 1
	⇩	IEC POWER DEFAULT THRESHOLD: 30000	Range: 0 to 100000000 in steps of 1
	⇩	IEC ENERGY DEFAULT THRESHOLD: 30000	Range: 0 to 100000000 in steps of 1
	⇩	IEC PF DEFAULT THRESHOLD: 1.00	Range: 0.00 to 1.00
	⇩	IEC OTHER DEFAULT THRESHOLD: 30000	Range: 0 to 100000000 in steps of 1
	⇩	IEC REDUNDANCY ENABLED: No	Range: No, Yes
	⇧	IEC EVENT TIME BASE: LOCAL	Range: Local, UTC

IEC 60870-5-104 is a transmission protocol for network access, specifically for communication between a control station and substation over a TCP/IP network.

The N60 supports the IEC 60870-5-104 protocol. This protocol is enabled when the **SETTINGS ⇨ PRODUCT SETUP ⇨⇩ COMMUNICATIONS ⇨ PROTOCOL** setting is set to IEC 60870-5-104. The N60 can be used as an IEC 60870-5-104 slave device connected to a maximum of two masters (usually either an RTU or a SCADA master station). Since the N60 maintains two sets of IEC 60870-5-104 data change buffers, ideally no more than two masters actively communicate with the N60 at one time.

The **IEC ------- DEFAULT THRESHOLD** settings are used to determine when to trigger spontaneous responses containing M_ME_NC_1 analog data. These settings group the N60 analog data into types: current, voltage, power, energy, and other. Each setting represents the default threshold value for all M_ME_NC_1 analog points of that type. For example, to trigger spontaneous responses from the N60 when any current values change by 15 A, the **IEC CURRENT DEFAULT THRESHOLD**

setting is set to 15. Note that these settings are the default values of the deadbands. P_ME_NC_1 (parameter of measured value, short floating point value) points can be used to change threshold values, from the default, for each individual M_ME_NC_1 analog point. Whenever power is removed and re-applied to the N60, the default thresholds are in effect.

The **IEC REDUNDANCY** setting decides whether multiple client connections are accepted or not. If redundancy is set to Yes, two simultaneous connections can be active at any given time.

IEC TCP PORT NUMBER — To close the port, set the port number to 0. Any change takes effect when the N60 is restarted.

IEC COMMON ADDRESS OF ASDU — The change takes effect when the N60 is restarted.

IEC CYCLIC DATA PERIOD — The change takes effect when the N60 is restarted.

NOTE

Do not set more than one protocol to the same TCP/UDP port number, as this results in unreliable operation of those protocols.

SETTINGS ⇨ PRODUCT SETUP ⇨⇩ COMMUNICATIONS ⇨⇩ IEC 60870-5-104 PROTOCOL ⇨⇩ IEC NETWORK CLIENT ADDRESSES

■ IEC NETWORK ■ CLIENT ADDRESSES	⇔	CLIENT ADDRESS 1: 0.0.0.0	Range: standard IPV4 address format
		⇩	
	⇧	CLIENT ADDRESS 5: 0.0.0.0	Range: standard IPV4 address format

The N60 can specify a maximum of five clients for its IEC 104 connections. These are IP addresses for the controllers to which the N60 can connect. A maximum of two simultaneous connections are supported at any given time.

5.3.5.17 IEC 60870-5-103 protocol

SETTINGS ⇨ PRODUCT SETUP ⇨⇩ COMMUNICATIONS ⇨⇩ IEC 60870-5-103

■ IEC103 ■ PROTOCOL	⇔	IEC103 COMMON ADDRESS OF ASDU: 0	Range: 0 to 254 in steps of 1
	⇩⇧	IEC103 SYNC TIMEOUT: 1	Range: 1 to 1440 min in steps of 1
	⇩⇧	■ IEC103 INPUTS ■ BINARY	See below
	⇩⇧	■ IEC103 INPUTS ■ MEASURANDS	See below
	⇧	■ IEC103 COMMANDS ■	See below

SOFTWARE OPTION

The N60 is provided with optional IEC 60870-5-103 communications capability, specified as a software option at the time of ordering.

IEC 60870-5-103 is a companion standard to the IEC 60870-5 suite of standards for transmission protocols. It defines messages and procedures for interoperability between protection equipment and devices of a control system in a substation for communicating on a serial line.

The IEC 60870-5-103 protocol is enabled when the **SETTINGS ⇨ PRODUCT SETUP ⇨⇩ COMMUNICATIONS ⇨ PROTOCOL** setting is set to IEC 60870-5-103.

The IEC 60870-5-103 is an unbalanced (master-slave) protocol for coded-bit serial communication, exchanging information with a control system. In the context of this protocol, the protection equipment is the slave and the control system is the master. The communication is based on a point-to-point principle. The master must be able to interpret the IEC 60870-5-103 communication messages.

The UR implementation of IEC 60870-5-103 consists of the following functions:

- Report binary inputs
- Report analog values (measurands)
- Commands
- Time synchronization

The RS485 port supports IEC 60870-5-103.

The UR Family Communications Guide contains more information on the protocol.

IEC103 COMMON ADDRESS OF ASDU — This setting uniquely defines this N60 on the serial line. Select an ID between 0 and 254. This ID does not need to be in sequential order for all stations that communicate with a controller, but it is recommended. Note that RS485 only allows a maximum of 32 slave stations on a communication line, so the entire range of 254 addresses is never exhausted.

IEC103 SYNC TIMEOUT — This setting defines the time that the N60 waits for a synchronization message. The N60 synchronizes its clock using all available sources, with the source synching more frequently overwriting the time of the other sources. Since the synchronization message received from the IEC 60870-5-103 master is less frequent than IRIG-B, PTP, or SNTP, its time is overwritten by these three sources, if any of them is active. If the synchronization timeout occurs and none of IRIG-B, PTP, or SNTP is active, the N60 sets the invalid bit in the time stamp of a time-tagged message.

The settings for the remaining menus are outlined as follows.

SETTINGS ⇨ PRODUCT SETUP ⇨⇩ COMMUNICATIONS ⇨⇩ IEC 60870-5-103 ⇨⇩ IEC103 INPUTS BINARY

■ IEC103 INPUTS ■ BINARY	⇔	■ POINT 0 ■	See below
	⇩	■ POINT 1 ■	See below
	⇩		
	⇧	■ POINT 95 ■	See below

■ POINT 0 ■	⇔	POINT 0 FUN 0	Range: 0 to 255 in steps of 1
	⇩	POINT 0 INF 0	Range: 0 to 255 in steps of 1
	⇧	POINT 0 Input Off	Range: FlexLogic operand
	⇩		
■ POINT 95 ■	⇔	POINT 95 FUN 0	Range: 0 to 255 in steps of 1
	⇩	POINT 95 INF 0	Range: 0 to 255 in steps of 1
	⇧	POINT 95 Input Off	Range: FlexLogic operand

The binary input points are mapped using elements from a list of possible FlexLogic operands. A maximum of 96 binary inputs (points) can be mapped this way.

The IEC 60870-5-103 point list always starts with point 0 and ends at the first "Off" value. Since the IEC 60870-5-103 point list must be in a continuous block, any points assigned after the first "Off" point are ignored.

For each defined point, set appropriate values for the Function Type (FUN) and Information Number (INF), which form the Information Object Identifier field of the ASDU, as defined in IEC 60870-5-103.

The binary input points are sent as Class 1 data. They are sent either as a response to a general interrogation received from the controller or reported spontaneously. Spontaneous transmission occurs as a response to cyclic Class 2 requests. If the N60 wants to transmit Class 1 data at that time, it demands access for Class 1 data transmission (ACD=1 in the control field of the response).

For any change to take effect, restart the relay.

SETTINGS ⇨ PRODUCT SETUP ⇨⇩ COMMUNICATIONS ⇨⇩ IEC 60870-5-103 ⇨⇩ IEC103 INPUTS MEASURANDS

■ IEC103 INPUTS ■ MEASURANDS	⇔	■ ASDU 1 ■	See below
		⇩	
	⇧	■ ASDU 4 ■	

■ ASDU 1 ■	⇔	ASDU 1 TYP: 9	Range: 3 or 9
	⇧⇩	ASDU 1 FUN: 0	Range: 0 to 255 in steps of 1
	⇧⇩	ASDU 1 INF: 0	Range: 0 to 255 in steps of 1
	⇧⇩	ASDU 1 SCAN TOUT: 0	Range: 0 to 1000 s in steps of 1
	⇧⇩	ASDU 1 ANALOG 1 Off	Range: FlexAnalog parameter
	⇧⇩	ASDU 1 ANALOG 1 FACTOR: 1.000	Range: 0.000 to 65.535 in steps of 0.001
	⇧⇩	ASDU 1 ANALOG 1 OFFSET: 0	Range: -32768 to 32767 in steps of 1
		⇩	
	⇧⇩	ASDU 1 ANALOG 9 Off	Range: FlexAnalog parameter
	⇧⇩	ASDU 1 ANALOG 9 FACTOR: 1.000	Range: 0.000 to 65.535 in steps of 0.001
	⇧⇩	ASDU 1 ANALOG 9 OFFSET: 0	Range: -32768 to 32767 in steps of 1
		⇩	
■ ASDU 4 ■	⇧⇩	ASDU 4 TYP: 9	Range: 3 or 9
	⇧⇩	ASDU 4 FUN: 0	Range: 0 to 255 in steps of 1
	⇧⇩	ASDU 4 INF: 0	Range: 0 to 255 in steps of 1
	⇧⇩	ASDU 4 SCAN TOUT: 0	Range: 0 to 1000 s in steps of 1
	⇧⇩	ASDU 4 ANALOG 1 Off	Range: FlexAnalog parameter
	⇧⇩	ASDU 4 ANALOG 1 FACTOR: 1.000	Range: 0.000 to 65.535 in steps of 0.001

⇕	**ASDU 4 ANALOG 1 OFFSET: 0**	Range: -32768 to 32767 in steps of 1
⇕	**ASDU 4 ANALOG 9 Off**	Range: FlexAnalog parameter
⇕	**ASDU 4 ANALOG 9 FACTOR: 1.000**	Range: 0.000 to 65.535 in steps of 0.001
⇧	**ASDU 4 ANALOG 9 OFFSET: 0**	Range: -32768 to 32767 in steps of 1

The configuration menu allows a maximum of four ASDUs containing measurands.

Measurands are sent as a response to Class 2 requests, which are cyclic requests coming from the master.

TYPE IDENTIFICATION (TYP) — The configuration field TYP indicates how many measurands are present in the corresponding ASDU. Each ASDU can take either 4 or 9 measurands maximum, depending on the type identification (3 respectively 9). For any change to take effect, restart the relay.

FUNCTION TYPE (FUN) and **INFORMATION NUMBER (INF)** — These two fields form the Information Object Identifier of the ASDU as defined in IEC 60870-103. For any change to take effect, restart the relay.

SCAN TIMEOUT (SCAN TOUT) — This is the cyclic period used by the N60 to decide when a measurand ASDU is included in a response. The measurand is sent as response to a Class 2 request when the corresponding timeout expires. The default value 0 means 500 ms.

ANALOG # — This field contains the actual measurand to be sent in the response to the master. The measurands can be mapped using elements from a list of FlexAnalog operands. The measurands sent are voltage, current, power, power factor, and frequency. If any other FlexAnalog is chosen, the N60 sends 0 instead of its value. Note that the power is transmitted in KW, not W. Measurands are transmitted as ASDU 3 or ASDU 9 (type identification value set to measurands I, respectively measurands II).

Each IEC 60870-5-103 measurands list ends at the first unconfigured ("Off") value. Any measurand assigned after the first "Off" value is ignored.

At least one measurand per ASDU must be configured in order to configure the following ASDU. For example, the user can configure only one measurand for each ASDU, but the user is not allowed to skip ASDU 2 and configure measurands in ASDU 3.

For any change to take effect, restart the relay.

ANALOG # FACTOR and **OFFSET** — For each measurand included in the ASDU, a factor and offset also can be configured. The factor and offset allow for scaling to be performed on measurands. The final measurement sent to the IEC 60870-103 master is then "a*x + b," where x is the measurand, a is the multiplying factor and b is the offset. The master has to perform the reversed operation in order to retrieve the actual value if such scaling is done. By default a = 1 and b = 0, so no scaling is done if these values are left at their defaults. Examples of when scaling is appropriate are as follows:

- If the measured value contains decimals and it is important to preserve the resolution. Since the format for transmitting the measurand does not permit decimals, a factor a>1 can be applied before transmission. For example, a frequency F=59.9Hz can be transmitted as Ft = 10 * F = 10 * 59.9 = 599. In this case a = 10, b = 0. The master receives 599 and has to divide by 10 to retrieve the real value 59.9.
- If the measured value is larger than what fits in the format defined in IEC 103. The format defined in the standard allows for signed integers up to 4095. By offsetting, unsigned integers up to 4096 + 4095 = 8191 are supported. Scaling using factors <1 can be required in such cases. The calculation is outlined in the IEC 60870-5-103 chapter of the UR Family Communications Guide. Two examples follow, where you decide factors a and b.

  Example 1: Nominal power Pn = 100 MW = 100000 KW (power is transmitted in KW)

  Since P can be both positive and negative:

  Transmitted power Pt = (4095/(Pn*2.4)) * P = (4095/(100000 * 2.4)) * P

  = 0.017 * P

  a = 0.017

  b = 0

Pt = 0.017 * P

For a max power 100000 KW * 2.4 = 240000 KW, we transmit

Pt = 0.017 * 240000 = 4080

A value above 240 MW is indicated by overflow.

Example 2: Nominal voltage Vn = 500000 V

Since RMS voltage V can be only positive:

Transmitted voltage Vt = (8191/(Vn*2.4)) * V - 4096 =

= (8191/(500000 * 2.4)) * V - 4096 = 0.0068 * V - 4096

a = 0.0068

Since the step is in increments of 0.001, we round it at:

a = 0.006

b = -4096

Vt = 0.006 * V - 4096

For max voltage 500000 V * 2.4 = 1200000 V, we transmit

Vt = 0.006 * 1200000 - 4096 = 7200 - 4096 = 3104

SETTINGS ⇨ PRODUCT SETUP ⇨⇩ COMMUNICATIONS ⇨⇩ IEC 60870-5-103 ⇨⇩ IEC103 COMMANDS

■ IEC103 COMMANDS ■	⇔	■ COMMAND 0 ■	See below
	⇩	■ COMMAND 1 ■	
	⇩		
	⇧	■ COMMAND 31 ■	

■ COMMAND 0 ■	⇔	COMMAND 0 FUN: 0	Range: 0 to 255 in steps of 1
	⇩	COMMAND 0 INF: 0	Range: 0 to 255 in steps of 1
	⇩	COMMAND 0 ON: Off	Range: Virtual input
	⇧	COMMAND 0 OFF: Off	Range: Virtual input
	⇩		
■ COMMAND 31 ■	⇔	COMMAND 31 FUN: 0	Range: 0 to 255 in steps of 1
	⇩	COMMAND 31 INF: 0	Range: 0 to 255 in steps of 1
	⇩	COMMAND 31 ON: Off	Range: Virtual input
	⇧	COMMAND 31 OFF: Off	Range: Virtual input

Commands are received as General Command (Type Identification 20). The user can configure the action to perform when an ASDU command comes.

A list of available mappings is provided on the N60. This includes 128 virtual inputs (see the following table). The ON and OFF for the same ASDU command can be mapped to different virtual inputs.

Each command is identified by the unique combination made by the function type (FUN) and information number (INF). If the master sends an ASDU command that does not have the FUN and INF of any configured command, the relay rejects it.

Table 5-9: Commands mapping table

Description	Value
Off	0
Virtual Input 1	1
Virtual Input 2	2
...	...
Virtual Input 128	128

For any change to take effect, restart the relay.

5.3.5.18 USB port

SETTINGS ⇨ PRODUCT SETUP ⇨⇩ COMMUNICATIONS ⇨⇩ USB 2.0

■ USB 2.0 ■	⇔	USB DEVICE PORT FUNCTION: Enabled	Range: Disabled, Enabled

This setting applies to the USB port on the graphical front panel.

This setting enables/disables the USB port on the graphical front panel. When the port function is "Enabled," a standard USB serial cable allows a computer running the EnerVista UR Setup software to retrieve, display, and write settings either individually or collectively, to display status and actual values, to initiate controls, and to retrieve and display event records, oscillography records, data logger records, and disturbance records. Installation of the EnerVista software automatically installs the drivers required to use this USB port.

DNP is not available using the USB port on the graphical front panel.

5.3.6 Modbus user map

SETTINGS ⇨ PRODUCT SETUP ⇨⇩ MODBUS USER MAP

■ MODBUS USER MAP ■	⇔	ADDR 1: 0 VALUE: 0	Range: 0 to 65535 in steps of 1
		⇩	
	⇧	ADDR 256: 0 VALUE: 0	Range: 0 to 65535 in steps of 1

The Modbus user map provides read-only access for up to 256 registers. The memory map can be read from the front panel, the UR Family Communications Guide, or in a web browser. For the web browser, enter the IP address of the N60 and click a **Modbus Memory Map** option.

On the front panel, the address to read a specific Modbus register depends on whether the requested value is a setting or an actual value.

Up to firmware version 7.8x, the settings and actual values are in the same Modbus table. To obtain a memory map value, enter its address on the front panel.

Starting in firmware version 7.90, the settings have their own Modbus memory table and the actual values are in their own table. To obtain a memory map value, use the following sequence:

1. Obtain the hexadecimal Modbus address of the data item. It must have four digits, such as 024A.

2. Prefix the address by 3 for settings or by 4 for actual values.
3. Convert the resulting hexadecimal number to decimal.
4. Enter the resulting number in the first column of the Modbus user map. The corresponding value (if programmed) displays in second column (**VALUE**). A value of "0" in subsequent register lines automatically returns values of Modbus registers having the address of the previous line incremented by 1. These subsequent addresses are all in the same Modbus table (settings or actual values) as the address that was entered.

   An address value of "0" in the initial register means "none" and values of "0" display for all registers.

   Different address values can be entered as required in any of the register positions.

Here are two examples of how to add a setting or actual value to the front panel Modbus user map.

To add the setting "Phase TOC 1 Pickup" to the Modbus user map:

1. Find the address of the setting "Phase TOC 1 Pickup," which is 334Eh (334E in hexadecimal format).
2. Prefix this address by 3 to obtain 3334Eh.
3. Convert this value to decimal to obtain 209742 and enter it on the front panel.

To add the actual value "SRC 1 Frequency" to the Modbus user map:

1. Find the address of the actual value "SRC 1 Frequency," which is 1D80h.
2. Prefix this address by 4 to obtain 41D80h.
3. Convert this value to decimal to obtain 269696 and enter it on the front panel.

5.3.7 Real-time clock

5.3.7.1 Menu

SETTINGS ⇨ PRODUCT SETUP ⇨⇩ REAL TIME CLOCK

■ REAL TIME ■ CLOCK	⇔	SYNCRONIZING SOURCE: None	Range: None, PP/IRIG-B/PTP/Other, IRIG-B/PP/PTP/ Other, PP/PTP/IRIG-B/Other, PBM Clock(with PBM O.C.)
	⇩	REAL TIME CLOCK EVENTS: Disabled	Range: Enabled, Disabled
	⇩	IRIG-B SIGNAL TYPE: None	Range: None, DC Shift, Amplitude Modulated
	⇩	■ PRECISION TIME ■ PROTOCOL (1588)	See below
	⇩	■ SNTP PROTOCOL ■	See below
	⇩	■ LOCAL TIME ■	See below
	⇧	■ PBM PTP ■	See below

The relay contains a real time clock (RTC) to create time stamps for communications protocols as well as for historical data, such as event records and oscillography. When the relay restarts, the RTC initializes from an onboard battery-backed clock, which has the same accuracy as an electronic watch, approximately ±1 minute per month (~23 ppm). Once the RTC is synchronized with the Precision Time Protocol (PTP), IRIG-B, or SNTP, its accuracy approaches that of the synchronizing time delivered to the relay. While the RTC is not synchronized via PTP or IRIG-B, or the relay determines that it has an offset possibly greater than 10 µs from the international time standard, the CLOCK UNSYNCHRONIZED FlexLogic operand is activated.

The relay supports the adjustment of the leap second (addition as well as removal of a leap second) when the UR is synchronized using the PTP or IRIG-B. Two Fexlogic operands are available for supporting this functionality: LEAP SECOND DETECTED and LEAP SECOND ADDED.

The **SYNCHRONIZING SOURCE** setting displays in the software when the relay includes the IEEE 1588 software option. The setting configures the priority sequence of the time synchronization source, to determine which of the available external time sources to use for time synchronization. A setting of None causes the RTC and the synchrophasor clock to free-run, and the clock can be changed from the front panel or from communications protocols. A setting of PP/IRIG-B/PTP/Other, IRIG-B/PP/PTP/Other, or PP/PTP/IRIG-B/Other causes the relay to track the first source named that is enabled and operational, or free-run if none of these are available. Here, PP means a time source that is strictly compliant with PP, PTP means a time source that is not strictly compliant with PP, and Other means any less precise source (SNTP, IEC 103, IEC 104, Modbus, or DNP). When a time source fails or recovers, the relay automatically transfers synchronization as required by this setting.

The setting option "PBM Clock" is only available in the UR with Process Bus Module (PBM) order codes. Selecting “PBM Clock” causes the relay to use the time source from any non-HardFiber Process Bus Module clock. If the Process Bus Module **PTP FUNCTION** setting is enabled and PTP grandmaster is available in the process bus network, the Process Bus Module clock is synchronized to the PTP grandmaster, else the Process Bus Module clock free-runs. A UR can use a synchronizing source either from the real-time clock (main CPU) or a Process Bus Module, as outlined in **Settings > Product Setup > Real Time Clock > PBM PTP**.

NOTE

.

Note that a UR does not need to be time synchronized to accept the sampled values. All the elements (protection, control, monitoring, logic, and so on) in the UR (except Line Current Differential element) remain fully functional without requiring any external synchronizing source for the UR, as long as all the sampled values subscribed by the relay are synchronized according to the **Settings > Process Bus Module > General > SmpSynch Check** setting and pass the other acceptance criteria as defined in **Settings > Process Bus Module > SV Stream Config > Logic**.

5

NOTE

Some UR applications like oscillography, event recorder, and datalogger use the real-time clock for time-stamping.

When the relay does not have the IEEE 1588 software option and this setting does not display, it uses IRIG-B when enabled and operational, then failing that SNTP when configured and operational, and otherwise it free-runs unless the clock is changed from the front panel or from communications protocols.

Setup for IRIG-B is illustrated in the Installation chapter.

For the Other protocols, whenever a time synchronization message is received through any of the active protocols, the N60 clock updates. However, given that IEC 60870-5-103, IEC 60870-5-104, Modbus, and DNP are low-accuracy time synchronization methods, avoid their use for synchronization when better accuracy time protocols, such as IRIG-B and PTP, are active in the system. If IRIG-B or PTP is used to update the relay clock, the other protocols (such as SNTP) are not allowed to update, even if active.

See the **COMMANDS ⇨ SET DATE AND TIME** menu section of this manual to manually set the RTC.

NOTE

When 1 ms accuracy is required for events, oscillography, time stamping, synchrophasors, and 87L asymmetry with respect to the master clock, the PTP clock needs to be connected to the CPU of a relay. The 1 ms accuracy cannot be maintained if the CPU of the relay is synchronized through the Process Bus Module due to a delay up to 2 ms in transmitting a time stamp from the Process Bus Module to a CPU.

The **REAL TIME CLOCK EVENTS** setting allows changes to the date and/or time to be captured in the event record. The event records the RTC time before the adjustment. A Date/Time Changed event is generated when:

- The real time clock changed from SNTP/PTP/IRIG-B and the time difference is more than one second
- The real time clock changed from the front panel or via Modbus register. The relay always generates this event regardless of the time difference.
- The Daylight Saving Time (DST) setting gets enabled and the current relay time is already in the DST zone

- The real time clock enters or leaves DST

To enable IRIG-B synchronization, the input **IRIG-B SIGNAL TYPE** must be set to DC Shift or Amplitude Modulated. IRIG-B synchronization can be disabled by making this setting None. When IRIG-B is enabled and active, clock synchronization by communication protocols. (DNP, IEC 60870-5-103, IEC 60870-5-104) is blocked, and clock synchronization from the front panel and over Modbus is always enabled.

Clocks can be synchronized locally among several relays using the computer time. When using a time source, such as IRIG-B, the time is overwritten eventually by the time source. To synchronize clocks among UR devices:

1. In the EnerVista software, expand the main menu in the Online Window area and select the **Synchronize Devices** entry. The window opens. The software prompts to acknowledge any offline devices.
2. Click the **Synchronize Devices** button at the top of the window, and confirm the action at the prompt. The devices assume the time of the computer being used.

To configure and enable PTP and/or SNTP, or to set local time parameters (for example time zone, daylight savings), refer to the later sections.

The relay supports the adjustment of real-time clock for the leap second (addition or removal of a leap second) per applicable standards, when the UR is synchronized using PTP or IRIG-B. The Flexlogic operand 'LEAP SECOND DETECTED' gets asserted for 1 second when leap second adjustment is made and event is recorded in the events log. The following functions are affected by the leap second time adjustment:

- Real-time clock
- Synchrophasors publishing and Comtrade recording
- Regular transient recorder Comtrade and data logger Comtrade.
- Event Logger

5

5.3.7.2 Precision time protocol (1588)

SETTINGS ⇨ PRODUCT SETUP ⇨⇩ REAL TIME CLOCK ⇨⇩ PRECISION TIME PROTOCOL (1588)

■ PRECISION TIME ■ PROTOCOL (1588)	⇔	STRICT POWER PROFILE: Disabled	Range: Enabled, Disabled
	⇩	PTP DOMAIN NUMBER: 0	Range: 0 to 255
	⇩	PTP VLAN PRIORITY: 4	Range: 0 to 7
	⇩	PTP VLAN ID: 0	Range: 0 to 4095
	⇩	■ PTP PORT 1 ■	See below
		⇩	
	⇧	■ PTP PORT 3 ■	

SETTINGS ⇨ PRODUCT SETUP ⇨⇩ REAL TIME CLOCK ⇨⇩ PRECISION TIME PROTOCOL (1588) ⇨⇩ PTP PORT 1(3)

■ PTP PORT 1 ■	⇩	PORT 1 PTP FUNCTION: Disabled	Range: Enabled, Disabled
	⇩	PORT 1 PATH DELAY ADDER: 0 ns	Range: 0 to 60000 ns in steps of 1

⇧ **PORT 1 PATH DELAY ASYMMETRY: 0 ns** Range: –1000 to +1000 ns in steps of 1

The N60 is provided with optional Precision Time Protocol capability. This feature is specified as the IEEE 1588 software option at the time of ordering.

The N60 supports the Precision Time Protocol (PTP) specified in IEEE Std 1588 2008 using the Power Profile (PP) specified in IEEE Std C37.238 2017. This enables the relay to synchronize to the international time standard over an Ethernet network that implements PP.

The relay can be configured to operate on some PTP networks that are not strictly PP. Time accuracy can be less than specified for a PP network. Tolerated deviations from strict PP include:

- Missing declaration of PP compliance in the messages
- Connection to a network device that does not support the PTP peer delay mechanism
- Jitter substantially greater than 1 μs in received event messages
- Certain non-compliant announce and sync message update rates

The relay implements PTP according to IEEE Std 1588 2008 and the equivalent IEC 61588:2009(E), sometimes referred to as version 2 PTP. It does not support the previous version of the standard (version 1).

PTP is a protocol that allows multiple clocks in a network to synchronize with one another. It permits synchronization accuracies better than 1 ns, but this requires that each and every component in the network achieve very high levels of accuracy and a very high baud rate, faster than normally used for relay communications. When operating over a generic Ethernet network, time error can amount to 1 ms or more. PP is a profile of PTP which specifies a limited subset of PTP suitable for use in power system protection, control, automation, and data communication applications, and thereby facilitates interoperability between different vendor's clocks and switches. PP specifies a worst-case delivered time error of less than 1 μs over a 16-hop network.

In a PTP system and in a PP system, the clocks automatically organize themselves into a master-slave synchronization hierarchy with the "best" clock available making itself the "grandmaster" at the top of the hierarchy; all others make themselves "slaves" and track the grandmaster. Typically the grandmaster clock receives its time from GPS satellites or some other link to the international time standard. If the grandmaster fails, the next "best" clock available in the domain assumes the grandmaster role. When a clock on start-up discovers that it is "better" than the present grandmaster, it assumes the grandmaster role and the previous grandmaster reverts to slave. The N60 qualification mechanism accepts a potential master clock as a new grandmaster, when in a four-second interval it has received three announce messages from it, all better than the present grandmaster clock and better than any other announce in this interval.

Time messages issued by the grandmaster are delayed as they pass through the network both due to the finite speed of the signal in the interconnecting fiber or wire, and due to processing delays in the Ethernet switches. Each clock and switch implementing PP measures the propagation delay to each of its PP neighbors, and compensates for these delays in the time received. Each network device implementing PP measures the processing delay it introduces in each time message and compensates for this delay in the time it transmits. As a result, the time delivered to end-devices such as the UR are virtually identical to the grandmaster time. If one of the network devices in the hierarchy does not fully implement PP, the associated propagation delay and/or latency may not be compensated for, and the time received at the end-device can be in error by more than 100 μs.

See the preceding Real Time Clock section for a description of when time values received via PTP are used to update the relay's real time clock.

The following settings are available for configuring the relay for PTP. The PTP menu displays only when the option was purchased.

STRICT POWER PROFILE — Power profile (IEEE Std C37.238 2017) requires that the relay only select a power profile compliant clock as a grandmaster, that the delivered time have worst-case error of ±1 μs, and that the peer delay mechanism be implemented. With the strict power profile setting enabled, the relay only selects as master the clocks displaying the IEEE_C37_238 identification codes. It uses a port only when the peer delay mechanism is operational. With the strict power profile setting disabled, the relay uses clocks without the power profile identification when no power profile clocks are present, and uses ports even if the peer delay mechanism is non-operational. This setting applies to all of the relay's PTP capable ports.

PTP DOMAIN NUMBER — Set this setting to the domain number of the grandmaster-capable clock(s) to be synchronized to. A network can support multiple time distribution domains, each distinguished with a unique domain number. More commonly, there is a single domain using the default domain number zero.

This setting applies to all of the relay's PTP capable ports.

PTP VLAN PRIORITY — This setting selects the value of the priority field in the 802.1Q VLAN tag in request messages issued by the relay's peer delay mechanism. In compliance with PP the default VLAN priority is 4, but it is recommended that it be set to 7 in accordance with PTP. Depending on the characteristics of the device to which the relay is linked directly, VLAN Priority can have no effect.

This setting applies to all of the relay's PTP capable ports.

PTP VLAN ID — This setting selects the value of the ID field in the 802.1Q VLAN tag in request messages issued by the relay's peer delay mechanism. It is provided in compliance with PP. As these messages have a destination address that indicates they are not to be bridged, their VLAN ID serves no function, and so can be left at its default value. Depending on the characteristics of the device to which the relay is linked directly, VLAN ID can have no effect. This setting applies to all of the relay's PTP capable ports.

PORT 1 ... 3 FUNCTION — While this port setting is selected to disabled, PTP is disabled on this port. The relay does not generate or listen to PTP messages on this port.

PORT 1 ... 3 PATH DELAY ADDER — The time delivered by PTP is advanced by the time value in this setting prior to the time being used to synchronize the relay's real time clock. This is to compensate to the extent practical for time delivery delays not compensated for in the network. In a fully compliant PP network, the peer delay and the processing delay mechanisms compensate for all the delays between the grandmaster and the relay. In such networks, make this setting zero.

In networks containing one or more switches and/or clocks that do not implement both of these mechanisms, not all delays are compensated, so the time of message arrival at the relay is later than the time indicated in the message. This setting can be used to approximately compensate for this delay. However, as the relay is not aware of network switching that dynamically changes the amount of uncompensated delay, there is no setting that always and completely corrects for uncompensated delay. A setting can be chosen that reduces the worst-case error to half of the range between minimum and maximum uncompensated delay, if these values are known.

PORT 1 ... 3 PATH DELAY ASSYMMETRY — This setting corresponds to "delayAsymmetry" in PTP, which is used by the peer delay mechanism to compensate for any difference in the propagation delay between the two directions of a link. Except in unusual cases, the two fibers are of essentially identical length and composition, so make this setting zero.

In unusual cases where the length of the link is different in different directions, set this setting to the number of nanoseconds the Ethernet propagation delay to the relay is longer than the mean of path propagation delays to and from the relay. For instance, if it is known say from the physical length of the fibers and the propagation speed in the fibers that the delay from the relay to the Ethernet switch it is connected to is 9000 ns and that the delay from the switch to the relay is 11000 ns, then the mean delay is 10000 ns, and the path delay asymmetry is 11000 - 10000 = +1000 ns.

5.3.7.3 SNTP protocol

SETTINGS ⇨ PRODUCT SETUP ⇨⇩ REAL TIME CLOCK ⇨⇩ SNTP PROTOCOL

■ SNTP PROTOCOL ■	⇔	SNTP FUNCTION: Disabled	Range: Enabled, Disabled
	⇩	SNTP SERVER1 IP ADDR: 127.0.0.1	Range: standard IP address format
	⇩	SNTP SERVER2 IP ADDR: 127.0.0.1	Range: standard IP address format
	⇩	SNTP SERVER1 UDP PORT: 123	Range: 0 to 65535 in steps of 1
	⇧	SNTP SERVER2 UDP PORT: 123	Range: 0 to 65535 in steps of 1

The N60 supports the Simple Network Time Protocol specified in RFC-2030. With SNTP, the N60 can obtain clock time over an Ethernet network. The N60 acts as an SNTP client to receive time values from redundant SNTP/NTP servers, usually a dedicated product using a GPS receiver to provide an accurate time. One or two SNTP servers can be used; use of both servers for redundancy is recommended but not required.

To use SNTP, enable the function and set **SNTP SERVER1 IP ADDR** and/or **SNTP SERVER2 IP ADDR** to the SNTP/NTP server IP addresses. The N60 attempts to obtain time values from the SNTP SERVER1 SNTP/NTP server. If SERVER1 is not available/ reachable, the N60 switches to the SNTP SERVER2 to get the time value and vice versa.

Since many time values are obtained and averaged, it generally takes three to four minutes until the N60 clock is closely synchronized with the SNTP/NTP server. It can take up to 20 minutes for the N60 to signal an SNTP self-test error if the server is offline, depending on the number and SNTP server modes. Broadcast mode timeout is 10 minutes and unicast timeout is 80 seconds (corresponds to three unicast request retries).

SNTP FUNCTION — Enables or disables the SNTP feature on the N60.

SNTP SERVER1 IP ADDR — The N60 uses the SERVER1 address to contact an SNTP/NTP server to obtain time values. When the **SNTP FUNCTION** setting is set to enabled or on startup if the setting is enabled, the N60 SNTP client requests SERVER1 for the time value. If the SERVER1 channel fails or is not reachable, the N60 switches to SERVER2 SNTP/NTP server.

If SERVER1 SNTP server is set to 127.0.0.1, the N60 considers the SERVER1 SNTP server to be unconfigured.

To use SERVER1 SNTP in broadcast mode, set the **SNTP SERVER1 IP ADDR** setting to "0.0.0.0" and **SNTP FUNCTION** to "Enabled." The N60 SNTP client then listens to SNTP messages sent to the "all ones" broadcast address for the subnet. The N60 waits up to 18 minutes (>1024 seconds) without receiving an SNTP broadcast message before switching to the alternate channel.

SNTP SERVER2 IP ADDR — The N60 uses this address to contact an SNTP/NTP server if SERVER1 channel fails or is not reachable. If SERVER2 SNTP server is set to 127.0.0.1, the N60 considers the SERVER2 SNTP server to be unconfigured.

To use SERVER2 SNTP in broadcast mode, set the **SNTP SERVER2 IP ADDR** setting to "0.0.0.0" and **SNTP FUNCTION** to "Enabled." The N60 SNTP client then listens to SNTP messages sent to the "all ones" broadcast address for the subnet. The N60 waits up to 18 minutes (>1024 seconds) without receiving an SNTP broadcast message before switching to the alternate channel.

SNTP SERVER1 UDP PORT — This setting is 123 for normal SNTP operation. If SERVER1 SNTP is not required, close the port by changing this setting to zero.

SNTP SERVER2 UDP PORT — This setting is 123 for normal SNTP operation. If SERVER2 SNTP is not required, close the port by changing this setting to zero.

NOTE

Do not set more than one protocol to the same TCP/UDP port number, as this results in unreliable operation of those protocols.

If **SERVER1 IP ADDR** and **UDP PORT** settings match the **SERVER2 IP ADDR** and **UDP PORT** settings, the N60 considers only the SERVER1 SNTP server as being configured and an SNTP Failure error message generates. The failure message also displays when both servers are unavailable.

5.3.7.4 Local time

SETTINGS ⇨ PRODUCT SETUP ⇨⇩ REAL TIME CLOCK ⇨⇩ LOCAL TIME

■ LOCAL TIME ■	⇔	LOCAL TIME OFFSET FROM UTC: 0.0 hr	Range: –24.0 to 24.0 hr in steps of 0.25
	⇩	DAYLIGHT SAVINGS TIME: Disabled	Range: Disabled, Enabled
	⇩	DST START MONTH: January	Range: January to December (all months)
	⇩	DST START DAY: Sunday	Range: Sunday to Saturday (all days of the week)
	⇩	DST START DAY INSTANCE: First	Range: First, Second, Third, Fourth, Last

⇕	**DST START HOUR:** **2:00**	Range: 0:00 to 23:00 in steps of one hour
⇕	**DST STOP MONTH:** **January**	Range: January to December (all months)
⇕	**DST STOP DAY:** **Sunday**	Range: Sunday to Saturday (all days of the week)
⇕	**DST STOP DAY INSTANCE:** **First**	Range: First, Second, Third, Fourth, Last
⇧	**DST STOP HOUR:** **2:00**	Range: 0:00 to 23:00 in steps of one hour

The N60 maintains two times: local time and Universal Coordinated Time (UTC). Local time can be provided by IRIG-B signals. UTC time is provided by SNTP servers.

The real-time clock (RTC) and time stamps reported in historical records and communication protocols can be incorrect if the Local Time settings are not configured properly.

See the IRIG-B section in the Installation chapter for guidance on these settings when using an IRIG-B source that sets the IRIG-B control bits according to IEEE Std 1344-1995.

LOCAL TIME OFFSET FROM UTC — Used to specify the local time zone offset from UTC (Greenwich Mean Time) in hours. Time zones in the eastern hemisphere have positive values; time zones in the western hemisphere have negative values. A value of zero causes the relay to use UTC for local time. This setting has two uses. When the system RTC is synchronized with a communications protocol providing only local time or it is free-running, the offset setting is used to calculate UTC from the local time these provide. When the RTC is synchronized with a communications protocol providing only UTC (such as PTP or SNTP), the time offset setting is used to determine local time from the UTC provided. PTP ALTERNATE_TIME_OFFSET_INDICATOR TLVs are not used to calculate local time.

DAYLIGHT SAVINGS TIME and **DST** — Can be used to allow the relay to follow the DST rules of the local time zone. Note that when IRIG-B time synchronization is active, the local time in the IRIG-B signal contains any daylight savings time offset and so the DST settings are ignored. Note that the following items do not include the DST: Time of Day Timer Start Time; Time of Day Timer Stop Time; Event Recorder Last Cleared Date; Source x Demand VAR Maximum Date; Source x Demand WATT Maximum Date; Source x Demand VA Maximum Date; Source x Demand Ia Maximum Date; Source x Demand Ib Maximum Date; Source x Demand Ic Maximum Date; PMU x Last Cleared Date; PMU One-Shot Time; Data Logger Newest Time; Data Logger Oldest Time; Oscillography Last Cleared Date; Last Settings Change Date; User Programmable Fault Report Cleared Date; Digital Counter x Frozen Time Stamp; HIZ RMS Capture x Time; and HIZ Capture x Time.

5.3.7.5 PBM PTP

SETTINGS ⇨⇩ PRODUCT SETUP ⇨⇩ REAL TIME CLOCK ⇨⇩ PBM PTP

■ **PBM PTP** ■	⇔	**PTP FUNCTION:** **Disabled**	Range: Disabled, Master-Slave, Slave-only
	⇕	**PTP PROFILE:** **Power Utility Profil**	Range: Power Utility Profil, Power Profile
	⇕	**PTP DOMAIN NUMBER:** **93**	Range: 0 to 255
	⇕	**PTP VLAN PRIORITY:** **4**	Range: 0 to 7
	⇕	**PTP VLAN ID:** **0**	Range: 0 to 4094
	⇕	**PTP MASTER PRIO1:** **128**	Range: 0 to 255
	⇕	**PTP MASTER PRIO2:** **128**	Range: 0 to 255

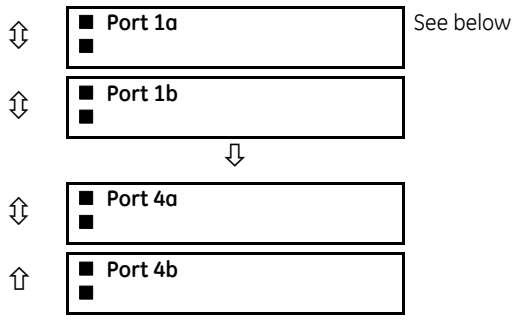

The time synchronizing source for the relay is set using **SETTINGS ⇨ PRODUCT SETUP ⇨⇩ REAL TIME CLOCK**. Another time source is set for the Process Bus Module.

The Process Bus Module supports the Precision Time Protocol (PTP) as PTP master and slave functionality.

The PTP state of each port is determined by the PTP settings and grandmaster clock availability on the local network.

Time synchronization supports IEEE 1588 PTPv2.

PBM PTP configuration

The N60 supports IEEE 1588 PTPv2 as PTP Slave or PTP Master on its Process Bus Module ports. It can be supplied with an external RTC clock from the main CPU ports (station bus ports), the Process Bus Module ports, or both. It utilizes one of the two clocks depending upon the configuration of the **SETTINGS > PRODUCT SETUP > REAL TIME CLOCK > SYNCRONIZING SOURCE** and **SETTINGS > PRODUCT SETUP > REAL TIME CLOCK > PBM PTP > PTP FUNCTION** settings, as follows:

- To use an external PTP Grand Master clock from the Process Bus Module port (UR acts as PTP Slave only), configure the following settings:
  - **SETTINGS > PRODUCT SETUP > REAL TIME CLOCK > SYNCRONIZING SOURCE** = PBM clock
  - **SETTINGS > PRODUCT SETUP > REAL TIME CLOCK > PBM PTP > PTP FUNCTION** = Slave-only

  With this configuration, the relay RTC will use the clock from the Process Bus Module port. .

  If the **SETTINGS > PRODUCT SETUP > REAL TIME CLOCK > SYNCRONIZING SOURCE** setting is “PBM clock” and the **SETTINGS > PRODUCT SETUP > REAL TIME CLOCK > PBM PTP > PTP FUNCTION** setting is “Disabled”, the RTC clock free-runs.
- To use an external PTP Grand Master clock from the Process Bus Module port (UR in PTP Slave mode) or to enable the N60 as PTP Master on its Process Bus Module ports, configure the following settings:
  - **SETTINGS > PRODUCT SETUP > REAL TIME CLOCK > SYNCRONIZING SOURCE** = PBM clock
  - **SETTINGS > PRODUCT SETUP > REAL TIME CLOCK > PBM PTP > PTP FUNCTION** = Master-Slave

  With this configuration, the relay RTC uses the clock from the Process Bus Module port.
- To use an external clock through a main CPU port (PTP Slave, IRIG-B, other source) and to enable the N60 as PTP Master on its Process Bus Module ports, configure the following settings:
  - **SETTINGS > PRODUCT SETUP > REAL TIME CLOCK > SYNCRONIZING SOURCE** = PP/IRIG-B/PTP/Other, or IRIG-B/PP/PTP/Other, or PP/PTP/IRIG-B/Other
  - **SETTINGS > PRODUCT SETUP > REAL TIME CLOCK > PBM PTP > PTP FUNCTION** = Master-Slave, or Slave, or Disabled

  With this configuration, the relay RTC uses the clock from the main CPU port.

NOTE Some UR applications like oscillography, event recorder, and datalogger use the real-time clock for time-stamping.

Note that in all of these scenarios, when the Grand Master clock is not available through a CPU port and/or Process Bus Module, all the elements (protection, control, monitoring, logic, and so on) in the N60, except the Line Current Differential element, remain functional without requiring any external synchronizing source for the N60, as long as all the sampled values subscribed by the relay are synchronized according to the setting definition of **SMPSYNCH CHECK** (**SETTINGS > PROCESS BUS MODULE > GENERAL > SMPSYNCH CHECK**) and pass the other acceptance criteria.

PTP FUNCTION — Sets the source for time synchronization for the Process Bus Module.

When set to Disabled, PTP is disabled on all ports of the Process Bus Module.

When set to Master-Slave, the Process Bus Module acts as a PTP slave when a grandmaster clock is available in the communication path. If no better clock than its own clock is available in the communication path, the module switches to master mode and provides the grandmaster functionality by sending Announce frames and other supporting PTP Master frames.

When set to Slave-only, the Process Bus Module acts as a PTP slave ordinary clock if a grandmaster clock is available in the network. If no grandmaster clock is available in the communication path, the module continues to wait for the Announce messages.

When PTP is enabled but no grand master is available on any of the Process Bus Module ports, "PB PTP Failure" events are generated.

To view the synchronizing source, see **ACTUAL VALUES ⇨⇩ PB MODULE ⇨⇩ TIME SYNC ⇨ SYNC SOURCE**.

PTP PROFILE — Specifies the profile to be used for PTP Master communication. The Power Utility Profile option relates to IEC 61850-9-3, while the Power Profile option relates to IEEE C37.238 2017.

When the Process Bus Module PTP is in the slave state, this setting has no effect. As a slave, the Process Bus Module accepts both the Power Profile and the Power Utility Profile.

PTP DOMAIN NUMBER — Set this to the domain number of the grandmaster-capable clock(s) to synchronize to. A network can support multiple time distribution domains, each distinguished with a unique domain number. The Power Utility Profile recommends 93 as the value for the domain number.

PTP VLAN PRIORITY — This setting selects the value of the priority field in the 802.1Q VLAN tag in PTP request messages issued by the relay.

PTP VLAN ID — This setting selects the value of the ID field in the 802.1Q VLAN tag in PTP request messages issued by the relay. As these messages have a destination address that indicates they are not to be bridged, their VLAN ID serves no function, and so the setting can be left at its default value. Depending on the characteristics of the device to which the relay is directly linked, VLAN ID can have no effect.

PTP MASTER PRIO1 — Priority1 is used in the execution of the best master clock algorithm and lower values take precedence. The operation of the best master clock algorithm selects clocks from a set with a lower value of priority1 over clocks from a set greater than priority1.

The setting values Priority1 and Priority2 decide when the UR Process Bus Module ports are selected as grandmaster clock. In a single LAN, GE recommends the following:

- Set the Priority1 of the UR larger than the actual grandmaster, so that the grandmaster(s) takes precedence over UR
- Set the same Priority1 for all the UR Process Bus Module ports participating in one communication path
- Use Priority2 to further prioritize the UR Process Bus Module ports in the network. The UR with lower value of Priority2 is selected as best master when Priority1, clockClass, clockAccuracy, and scaledOffsetLogVariance are the same.

The setting is editable in the software when the **PTP FUNCTION** setting is Master-Slave.

PTP MASTER PRIO2 — Priority2 is used in the execution of the best master clock algorithm and lower values take precedence. If the operation of the best master clock algorithm fails to order the clocks based on the values of priority1, clockClass, clockAccuracy, and scaledOffsetLogVariance, the priority2 attribute allows the creation of up to 256 priorities to further fine-tune the selection of best clocks.

If Priority2 is configured the same for two URs in the same communication path, best master clock algorithm uses clockIdentity to resolve the tie-breaker.

The setting is editable in the software when the **PTP FUNCTION** setting is Master-Slave.

NOTE

Independent of the **NETWORK CONFIG** and **PTP FUNCTION** settings, the enabled transceiver ports on the Process Bus Module operate in stateless transparent clock mode. GE recommends always setting the **NETWORK CONFIG** setting to match with the network topology to avoid unnecessary data storms. For example, if the PRP network has multiple URs connected on PRP LAN and if the UR's **NETWORK CONFIG** setting is misconfigured to "Independent" PTP messages other than PDelay messages are forwarded between the connected ports, which can create a PTP data storm.

Ports

SETTINGS ⇨⇩ PRODUCT SETUP ⇨⇩ REAL-TIME CLOCK ⇨ PBM PTP ⇨⇩ Port 1a(4b)

■ **Port 1a** ■	⇔	**PATH DELAY ADDER:** **0 ns**	Range: 0 to 60000 ns in steps of 1
	⇧	**PATH DELAY ASYMMETRY:** **0 ns**	Range: -1000 to +1000 ns in steps of 1

These setting are editable in the software when the **PTP FUNCTION** setting is not Disabled.

Up to eight ports display here, depending on the Process Bus Module.

Default port assignments for the Process Bus Module are as follows:

- Parallel Redundancy Protocol (PRP) — Ports 1a and 1b are enabled
- High-Availability Seamless Redundancy (HSR) — Ports 1a and 1b are enabled
- Dual HSR — Ports 1a and 1b support HSR-1, and ports 3a and 3b support HSR-2
- INDEPENDENT — Ports 1a to 4b are enabled

Port availability by order code is as follows:

- 85 — Ports 1a and 1b, or 3a and 3b
- 86 — All eight ports
- 87 — All eight ports

For the following two settings, there is no dependency with the **NETWORK CONFIG** setting. For order code 85, ports 1a, 1b, 3a, and 3b settings are available. For order codes 86 and 87, all the port settings are available. Configure these settings as per your network. For example, for order code 85, while ports 1a, 1b, 3a, and 3b settings display, configure ports 1a and 1b when your network uses these two ports.

PATH DELAY ADDER — The time delivered by PTP is advanced by the time in this setting prior to the time being used to synchronize the relay's real-time clock. This is to compensate for time delivery delays not compensated for in the network. In a fully compliant power utility network, the peer delay and the processing delay mechanisms compensate for all the delays between the grandmaster and the relay. In such networks, use 0 ns for this setting.

In networks containing one or more switches and/or clocks that do not implement both of these mechanisms, not all delays are compensated for, so the time of message arrival at the relay is later than the time indicated in the message. This setting can be used to approximately compensate for this delay. However, as the relay is not aware of network switching that changes dynamically the amount of uncompensated delay, there is no setting that always corrects completely for uncompensated delay. A setting can be chosen that reduces worst-case error to half of the range between minimum and maximum uncompensated delay, if these values are known.

Restart the relay after changing this setting, for example using **Maintenance > Reboot Relay**.

PATH DELAY ASYMMETRY — This setting corresponds to "delayAsymmetry" in PTP, which is used by the peer delay mechanism to compensate for any difference in the propagation delay between the two directions of a link. Except in unusual cases, the two fiber cables are of essentially identical length and composition, so use 0 ns for this setting.

In unusual cases where the length of the link is different in different directions, make this setting the number of nanoseconds that the Ethernet propagation delay to the relay is longer than the mean of path propagation delays to and from the relay. For example, if it is known from the physical length of the fiber cable and the propagation speed in the fiber that the delay from the relay to the Ethernet switch it is connected to is 9 000 ns and that the delay from the switch to the relay is 11 000 ns, then the mean delay is 10 000 ns, and the path delay asymmetry is +1 000 ns.

5.3.8 User-programmable fault reports

SETTINGS ⇨ PRODUCT SETUP ⇨⇩ USER-PROGRAMMABLE FAULT REPORTS ⇨⇩ USER-PROGRAMMABLE FAULT REPORT 1(2)

■ **USER-PROGRAMMABLE** ■ **FAULT REPORT 1**	⇔	**FAULT REPORT 1** **FUNCTION: Disabled**	Range: Disabled, Enabled

⇕	**PRE-FAULT 1 TRIGGER:** **Off**	Range: FlexLogic operand
⇕	**FAULT 1 TRIGGER:** **Off**	Range: FlexLogic operand
⇕	**FAULT REPORT 1 # 1:** **Off**	Range: Off, any actual value analog parameter
	⇩	
⇧	**FAULT REPORT 1 #32:** **Off**	Range: Off, any actual value analog parameter

When enabled, this function monitors the pre-fault trigger. The pre-fault data are stored in the memory for prospective creation of the fault report on the rising edge of the pre-fault trigger. The element waits for the fault trigger as long as the pre-fault trigger is asserted, but not shorter than 1 second. When the fault trigger occurs, the fault data is stored and the complete report is created. If the fault trigger does not occur within 1 second after the pre-fault trigger drops out, the element resets and no record is created.

The user programmable record contains the following information: the user-programmed relay name, detailed firmware revision (x.xx, for example) and relay model (N60), the date and time of trigger, the name of pre-fault trigger (a specific FlexLogic operand), the name of fault trigger (a specific FlexLogic operand), the active setting group at pre-fault trigger, the active setting group at fault trigger, pre-fault values of all programmed analog channels (one cycle before pre-fault trigger), and fault values of all programmed analog channels (at the fault trigger).

Each fault report is stored as a file to a maximum capacity of ten files. An eleventh trigger overwrites the oldest file. The EnerVista software is required to view all captured data. A FAULT RPT TRIG event is automatically created when the report is triggered.

The relay includes two user-programmable fault reports to enable capture of two types of trips (for example, trip from thermal protection with the report configured to include temperatures, and short-circuit trip with the report configured to include voltages and currents). Both reports feed the same report file queue.

The last record is available as individual data items via communications protocols.

PRE-FAULT 1 TRIGGER — Specifies the FlexLogic operand to capture the pre-fault data. The rising edge of this operand stores one cycle-old data for subsequent reporting. The element waits for the fault trigger to actually create a record as long as the operand selected as **PRE-FAULT 1 TRIGGER** is "On." If the operand remains "Off" for 1 second, the element resets and no record is created.

FAULT 1 TRIGGER — Specifies the FlexLogic operand to capture the fault data. The rising edge of this operand stores the data as fault data and results in a new report. The trigger (not the pre-fault trigger) controls the date and time of the report.

FAULT REPORT 1 # 1 to **FAULT REPORT 1 #32** — These settings specify an actual value such as voltage or current magnitude, true RMS, phase angle, frequency, temperature, and so on, to be stored when the report is created. Up to 32 channels can be configured. Two reports are configurable to cope with variety of trip conditions and items of interest.

5.3.9 Oscillography

5.3.9.1 Menu

SETTINGS ⇨ PRODUCT SETUP ⇨⇩ OSCILLOGRAPHY

■ **OSCILLOGRAPHY** ■	⇔	**NUMBER OF RECORDS:** **15**	Range: 3 to 64 in steps of 1
	⇕	**TRIGGER MODE:** **Automatic Overwrite**	Range: Automatic Overwrite, Protected
	⇕	**TRIGGER POSITION:** **50%**	Range: 0 to 100% in steps of 1
	⇕	**TRIGGER SOURCE:** **Off**	Range: FlexLogic operand

⇕	**AC INPUT WAVEFORMS: 64 samples/cycle**	Range: Off, 8, 16, 32, 64 samples/cycle
⇕	■ **DIGITAL CHANNELS** ■	See below
⇧	■ **ANALOG CHANNELS** ■	See below

Oscillography records contain waveforms captured at the sampling rate as well as other relay data at the point of trigger. Oscillography records are triggered by a programmable FlexLogic operand. Multiple oscillography records can be captured simultaneously.

To retrieve an Oscillography record from a relay:

1. If not yet set up for oscillography, configure settings under **Settings > Product Setup > Oscillography** in the EnerVista software.
2. Access **Actual Values > Records > Oscillography** in the EnerVista software.
3. In the window that opens, select the record number. The highest number is the most recent record (Newest Record Number).
4. Click the **Read** button to get the waveform. When available, waveforms are displayed graphically, and otherwise error messages display.
5. In the waveform window that opens, you can save the file, for example with the CFG extension.

The **NUMBER OF RECORDS** is selectable, but the number of cycles captured in a single record varies considerably based on other factors, such as sample rate and the number of operational modules. There is a fixed amount of data storage for oscillography; the more data captured, the less the number of cycles captured per record. See the **ACTUAL VALUES ⇨⇩ RECORDS ⇨⇩ OSCILLOGRAPHY** menu to view the number of cycles captured per record. The following table provides sample configurations with corresponding cycles/record. The minimum number of oscillographic records is three.

5

Table 5-10: Oscillography cycles/record example

Records	CT/VTs	Sample rate	Digital channels	Analog channels	Cycles per record
3	1	32	32	16	2399
3	1	64	32	16	1450
16	1	32	32	16	666
16	1	64	32	16	402
32	1	32	32	16	352
32	1	64	32	16	213
3	2	32	32	16	1516
3	2	64	32	16	851
16	2	32	32	16	421

TRIGGER MODE — A new record automatically overwrites an oldest record when **TRIGGER MODE** is set to "Automatic Overwrite", keeping number of available records equal to the **NUMBER OF RECORDS** setting value. When **TRIGGER MODE** is set to "Protected" new records stopped being captured once number of captured records triggered by "Trigger Source" is becoming equal to the setting **NUMBER OF RECORDS** value (with an exception when oscillography is triggered manually from the **ACTUAL VALUES \ RECORDS \ OSCILLOGRAPHY \ FORCE TRIGGER** menu command), until all oscillography records are cleared.

TRIGGER POSITION — Set this to a percentage of the total buffer size (for example, 10%, 50%, 75%, and so on). A trigger position of 25% consists of 25% pre- and 75% post-trigger data.

TRIGGER SOURCE — Always captured in oscillography and can be any FlexLogic parameter (element state, contact input, virtual output, and so on). The relay sampling rate is 64 samples per cycle.

AC INPUT WAVEFORMS — Determines the sampling rate at which AC input signals (that is, current and voltage) are stored. Reducing the sampling rate allows longer records to be stored. This setting has no effect on the internal sampling rate of the relay, which is always 64 samples per cycle. That is, it has no effect on the fundamental calculations of the device.

NOTE

When changes are made to the oscillography settings, all existing oscillography records are cleared.

5.3.9.2 Digital channels

SETTINGS ⇨ PRODUCT SETUP ⇨⇩ OSCILLOGRAPHY ⇨⇩ DIGITAL CHANNELS

■ DIGITAL CHANNELS ■	⇔	DIGITAL CHANNEL 1 Off	Range: FlexLogic operand
		⇩	
	⇧	DIGITAL CHANNEL 127 Off	Range: FlexLogic operand

DIGITAL 1(127) CHANNEL — This setting selects the FlexLogic operand state recorded in an oscillography trace. The length of each oscillography trace depends in part on the number of parameters selected here. Parameters set to "Off" are ignored. There are 127 channels and one trigger, for a total of 128.

To populate quickly the rows in the Offline Window, use Ctrl C/V to copy/paste, or click then double-click a row to display a quick selection window.

Figure 5-53: Quick selection window

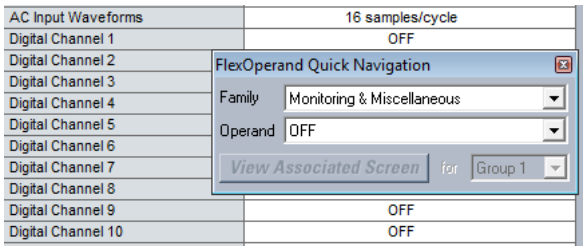

5.3.9.3 Analog channels

SETTINGS ⇨ PRODUCT SETUP ⇨⇩ OSCILLOGRAPHY ⇨⇩ ANALOG CHANNELS

■ ANALOG CHANNELS ■	⇔	ANALOG CHANNEL 1: Off	Range: Off, any FlexAnalog/actual value parameter See Appendix A for list
		⇩	
	⇧	ANALOG CHANNEL 32: Off	Range: Off, any FlexAnalog/actual value parameter See Appendix A for list

These settings select the metering actual value recorded in an oscillography trace. The length of each oscillography trace depends in part on the number of parameters selected here. Parameters set to "Off" are ignored. The parameters available in a given relay depend on

- the type of relay,
- the type and number of CT/VT hardware modules installed, and
- the type and number of analog input hardware modules installed

A list of all possible analog metering actual value parameters is presented in Appendix A: FlexAnalog Parameters.

All eight CT/VT module channels are stored in the oscillography file. The CT/VT module channels are named as follows:

<slot_letter><terminal_number>—<I or V><phase A, B, or C, or 4th input>

The fourth current input in a bank is called IG, and the fourth voltage input in a bank is called VX. For example, F2-IB designates the IB signal on terminal 2 of the CT/VT module in slot F.

If there are no CT/VT modules and analog input modules, no analog traces appear in the file; only the digital traces appear.

NOTE

In addition to the standard COMTRADE files *.hdr, *cfg & *.dat, a file with extension '*.set' is also recorded. This file contains the active settings of the protection and control elements of the relay uppon triggering of the oscillography file. The '*.set' can be opened in Enervista. The setting names are captured in English language only.

5.3.10 Data logger

SETTINGS ⇨⇩ PRODUCT SETUP ⇨⇩ DATA LOGGER

■ DATA LOGGER ■	⇔	DATA LOGGER MODE: Continuous	Range: Continuous, Trigger
	⇩	DATA LOGGER TRIGGER: Off	Range: FlexLogic operand
	⇩	DATA LOGGER RATE: 60000 msec	Range: 15 to 3600000 ms in steps of 1
	⇩	DATA LOGGER CHNL 1: Off	Range: Off, any FlexAnalog/actual value parameter See Appendix A for list
		⇩	
	⇩	DATA LOGGER CHNL 16: Off	Range: Off, any FlexAnalog/actual value parameter See Appendix A for list
	⇩	DATA LOGGER CONFIG: 0 CHNL x 0.0 DAYS	Range: Not applicable - shows computed data only

5

The data logger samples and records up to 16 analog parameters at a user-defined sampling rate. This recorded data can be downloaded to EnerVista UR Setup and displayed with parameters on the vertical axis and time on the horizontal axis. All data is stored in non-volatile memory, so the information is retained when power to the relay is lost.

For a fixed sampling rate, the data logger can be configured with a few channels over a long period or a larger number of channels for a shorter period. The relay automatically partitions the available memory between the channels in use. The following table outlines examples of storage capacities for a system frequency of 60 Hz.

Table 5-11: Data logger storage capacity example

Sampling rate	Channels	Days	Storage capacity
15 ms	1	0.1	482 s
	8	0.1	60 s
	9	0.1	54 s
	16	0.1	30 s
1000 ms	1	0.3	32729 s
	8	0.1	4091 s
	9	0.1	3637 s
	16	0.1	2046 s
60000 ms	1	22.7	1963710 s
	8	2.8	245460 s
	9	2.5	218190 s
	16	1.4	127230 s
3600000 ms	1	1362.1	117822600 s
	8	170.2	14727600 s
	9	151.3	13091400 s

NOTE

Changing any setting affecting data logger operation clears data in the log.

DATA LOGGER MODE — This setting configures the mode in which the data logger operates. When set to "Continuous," the data logger actively records any configured channels at the rate as defined by the **DATA LOGGER RATE**. The data logger is idle in this mode when no channels are configured. When set to "Trigger," the data logger records any configured channels at the instance of the rising edge of the **DATA LOGGER TRIGGER** source FlexLogic operand. The data logger ignores all subsequent triggers and continues to record data until the active record is full. Once the data logger is full, a CLEAR DATA LOGGER command is required to clear the data logger record before a new record can be started. Performing the CLEAR DATA LOGGER command also stops the current record and resets the data logger to be ready for the next trigger.

DATA LOGGER TRIGGER — This setting selects the signal used to trigger the start of a new data logger record. Any FlexLogic operand can be used as the trigger source. This setting only applies when the mode is set to "Trigger."

DATA LOGGER RATE — This setting selects the time interval at which the actual value data is recorded.

DATA LOGGER CHNL 1(16) — This setting selects the metering actual value that is to be recorded in Channel 1(16) of the data log. The parameters available in a given relay are dependent on: the type of relay, the type and number of CT/VT hardware modules installed, and the type and number of Analog Input hardware modules installed. Upon startup, the relay automatically prepares the parameter list. A list of all possible analog metering actual value parameters is shown in Appendix A: FlexAnalog Parameters.

DATA LOGGER CONFIG — This display presents the total amount of time that the Data Logger can record the channels not selected to "Off" without overwriting old data.

5.3.11 Demand

SETTINGS ⇨⇩ PRODUCT SETUTP ⇨⇩ DEMAND

■ **DEMAND** ■	⇔	**CRNT DEMAND METHOD:** **Thermal Exponential**	Range: Thermal Exponential, Block Interval, Rolling Demand
	⇩	**POWER DEMAND METHOD:** **Thermal Exponential**	Range: Thermal Exponential, Block Interval, Rolling Demand
	⇩	**DEMAND INTERVAL:** **15 MIN**	Range: 5, 10, 15, 20, 30, 60 minutes
	⇧	**DEMAND TRIGGER:** **Off**	Range: FlexLogic operand Note: for calculation using method 2a

The relay measures current demand on each phase, and three-phase demand for real, reactive, and apparent power. Current and Power methods can be chosen separately for the convenience of the user. Settings are provided to allow the user to emulate common electrical utility demand measuring techniques, for statistical or control purposes. If the **CRNT DEMAND METHOD** is set to "Block Interval" and the **DEMAND TRIGGER** is set to "Off," Method 2 is used as follows. If **DEMAND TRIGGER** is assigned to any other FlexLogic operand, Method 2a is used as follows.

The relay can be set to calculate demand by any of the following three methods.

5.3.11.1 Calculation method 1: Thermal exponential

This method emulates the action of an analog peak-recording thermal demand meter. The relay measures the quantity (RMS current, real power, reactive power, or apparent power) on each phase every second and assumes that the circuit quantity remains at this value until updated by the next measurement. It calculates the 'thermal demand equivalent' based on the following equation:

$$d(t) = D(1 - e^{-kt}) \qquad \textbf{Eq. 5-6}$$

where

d = demand value after applying input quantity for time t (in minutes)
D = input quantity (constant)
k = 2.3 / thermal 90% response time

The figure shows the 90% thermal response time characteristic of 15 minutes. A setpoint establishes the time to reach 90% of a steady-state value, just as the response time of an analog instrument. A steady state value applied for twice the response time indicates 99% of the value.

Figure 5-54: Thermal demand characteristic

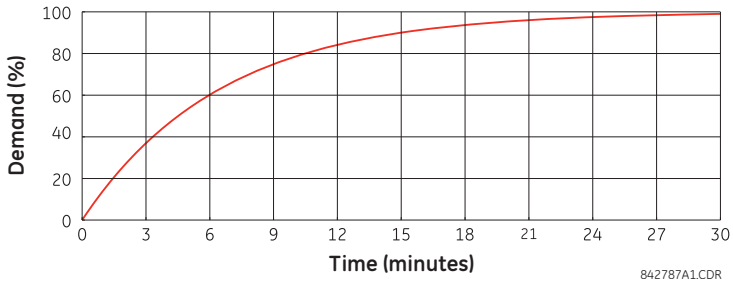

5.3.11.2 Calculation method 2: Block interval

This method calculates a linear average of the quantity (RMS current, real power, reactive power, or apparent power) over the programmed demand time interval, starting daily at 00:00:00 (that is, 12:00 am). The 1440 minutes per day is divided into the number of blocks as set by the programmed time interval. Each new value of demand becomes available at the end of each time interval.

5

5.3.11.3 Calculation method 2a: Block interval (with start demand interval logic trigger)

This method calculates a linear average of the quantity (RMS current, real power, reactive power, or apparent power) over the interval between successive Start Demand Interval logic input pulses. Each new value of demand becomes available at the end of each pulse. Assign a FlexLogic operand to the **DEMAND TRIGGER** setting to program the input for the new demand interval pulses.

NOTE

If no trigger is assigned in the **DEMAND TRIGGER** setting and the **CRNT DEMAND METHOD** is "Block Interval," use calculation method 2. If a trigger is assigned, the maximum allowed time between two trigger signals is 60 minutes. If no trigger signal appears within 60 minutes, demand calculations are performed and available, and the algorithm resets and starts the new cycle of calculations. The minimum required time for trigger contact closure is 20 µs.

5.3.11.4 Calculation method 3: Rolling demand

This method calculates a linear average of the quantity (RMS current, real power, reactive power, or apparent power) over the programmed demand time interval, in the same way as Block Interval. The value is updated every minute and indicates the demand over the time interval just preceding the time of update.

5.3.12 User-programmable LEDs

5.3.12.1 Menu - Enhanced and basic front panels

SETTINGS ⇨ PRODUCT SETUP ⇨⇩ USER-PROGRAMMABLE LEDS

■ USER-PROGRAMMABLE ■ LEDS	⇔	■ LED TEST ■	See below
	⇕	■ TRIP & ALARM LEDS ■	See page 5-141

```
⇕ ■ USER-PROGRAMMABLE
  ■ LED  1                    See page 5-141
          ⇩
⇧ ■ USER-PROGRAMMABLE
  ■ LED 48
```

5.3.12.2 Menu - Graphical front panel

SETTINGS ⇨ PRODUCT SETUP ⇨⇩ USER-PROGRAMMABLE LEDS

```
■ USER-PROGRAMMABLE
■ LEDS
        ⇔ ■ LED TEST                  See below
          ■
        ⇕ ■ TRIP & ALARM LEDS         See page 5-141
          ■
        ⇕ ■ EVENT CAUSE LED 1         See page 5-142
          ■
          ⇩
        ⇧ ■ EVENT CAUSE LED 9
          ■
```

The LEDs can be customized to illuminate when a selected FlexLogic operand is in the logic 1 state. The trip and alarm LEDs can also be customized in a similar manner. To ensure correct functionality of all LEDs, an LED test feature is also provided.

5.3.12.3 LED test

SETTINGS ⇨ PRODUCT SETUP ⇨⇩ USER-PROGRAMMABLE LEDS ⇨ LED TEST

```
■ LED TEST
■
        ⇔ LED TEST FUNCTION:          Range:  Disabled, Enabled
          Disabled
        ⇧ LED TEST CONTROL:           Range:  FlexLogic operand
          Off
```

When enabled, the LED test can be initiated from any digital input or user-programmable condition, such as a user-programmable pushbutton. The control operand is configured under the **LED TEST CONTROL** setting. The test covers all LEDs, including the LEDs of the optional user-programmable pushbuttons.

For the enhanced and basic front panels, the test consists of the following three stages:

1. All 62 LEDs on the relay are illuminated. This is a quick test to verify if any of the LEDs is “burned.” This stage lasts as long as the control input is on, up to a maximum of one minute. After one minute, the test ends.
2. All the LEDs are turned off, and then one LED at a time turns on for one second, then back off. The test routine starts at the top left panel, moving from the top to bottom of each LED column. This test checks for hardware failures that lead to more than one LED being turned on from a single logic point. This stage can be interrupted at any time.
3. All the LEDs are turned on. One LED at a time turns off for one second, then back on. The test routine starts at the top left panel moving from top to bottom of each column of the LEDs. This test checks for hardware failures that lead to more than one LED being turned off from a single logic point. This stage can be interrupted at any time.

For the graphical front panel, the test consists of the following stages:

1. All 22 LEDs on the relay are illuminated. This is a quick test to verify if any of the LEDs is "burned." This stage lasts as long as the control input is on, up to a maximum of one minute. After one minute, the test ends.
2. All the LEDs are turned off, and then one LED at a time turns on with the orange color for one second, then back off. The test routine starts at the top left panel, moving from the top to bottom for all 14 LEDs. Then the eight pushbutton LEDs are tested in the same manner. This test checks for hardware failures that lead to more than one LED being turned on from a single logic point. This stage can be interrupted at any time.
3. All the LEDs are turned on with the orange color. One LED at a time turns off for one second, then back on. The test routine starts at the top left panel moving from top to bottom for all 14 LEDs. Then the eight pushbutton LEDs are

tested in the same manner. This test checks for hardware failures that lead to more than one LED being turned off from a single logic point. This stage can be interrupted at any time.

4. Additionally, stages 2 and 3 are repeated twice for the five device status LEDs and nine event cause LEDs, one time with green color on and the other with red color on.

When testing is in progress, the LEDs are controlled by the test sequence, rather than the protection, control, and monitoring features. However, the LED control mechanism accepts all the changes to LED states generated by the relay and stores the actual LED states (on or off) in memory. When the test completes, the LEDs reflect the actual state resulting from relay response during testing. The reset pushbutton does not clear any targets when the LED Test is in progress.

A dedicated FlexLogic operand, LED TEST IN PROGRESS, is set for the duration of the test. When the test sequence is initiated, the LED TEST INITIATED event is stored in the event recorder.

The entire test procedure is user-controlled. In particular, stage 1 can last as long as necessary, and stages 2 and 3 can be interrupted. The test responds to the position and rising edges of the control input defined by the **LED TEST CONTROL** setting. The control pulses must last at least 250 ms to take effect. The following diagram explains how the test is executed.

Figure 5-55: LED test sequence

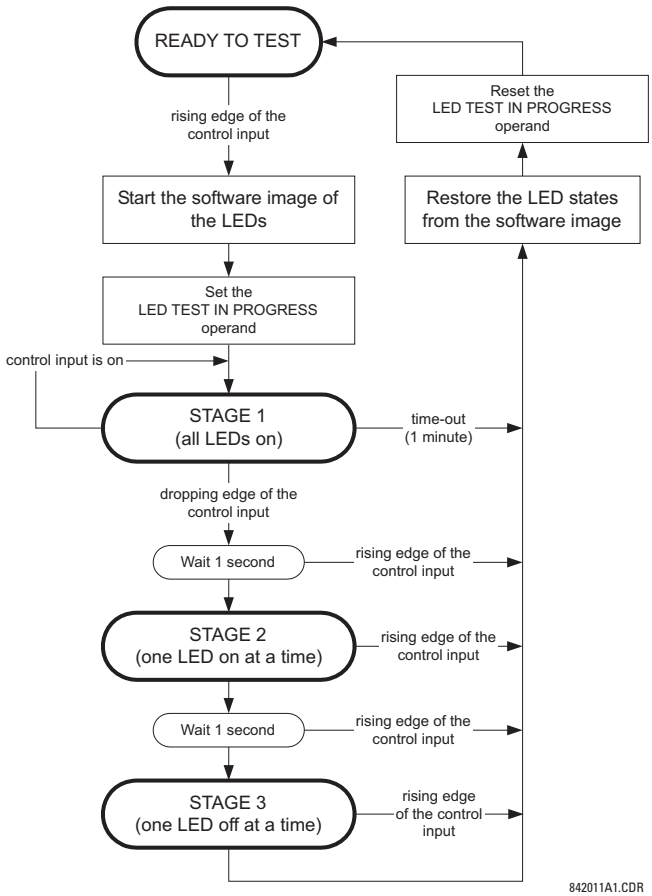

Application example 1

Assume one needs to check if any of the LEDs is "burned" through user-programmable pushbutton 1. Apply the following settings.

Configure user-programmable pushbutton 1 by making the following entries in the **SETTINGS ⇨ PRODUCT SETUP ⇨⇩ USER-PROGRAMMABLE PUSHBUTTONS ⇨ USER PUSHBUTTON 1** menu. (The option does not display when not purchased.)

PUSHBUTTON 1 FUNCTION: "Self-reset"
PUSHBTN 1 DROP-OUT TIME: "0.10 s"

Configure the LED test to recognize user-programmable pushbutton 1 by making the following entries in the **SETTINGS ⇨ PRODUCT SETUP ⇨⇩ USER-PROGRAMMABLE LEDS ⇨ LED TEST** menu:

LED TEST FUNCTION: "Enabled"
LED TEST CONTROL: "PUSHBUTTON 1 ON"

The test is initiated when the user-programmable pushbutton 1 is pressed. Keep the pushbutton pressed for as long as the LEDs are being visually inspected. When finished, release the pushbutton. The relay then automatically starts stage 2. At this point, test can be cancelled by pressing the pushbutton.

Application example 2

Assume one needs to check if any LEDs are "burned" as well as exercise one LED at a time to check for other failures. This is to be performed via user-programmable pushbutton 1.

After applying the settings in application example 1, hold down the pushbutton as long as necessary to test all LEDs. When finished, release the pushbutton so that the relay then automatically starts stage 2. When stage 2 is completed, stage 3 starts automatically. The test can be cancelled at any time by pressing the pushbutton.

5.3.12.4 Trip and alarm LEDs

SETTINGS ⇨ PRODUCT SETUP ⇨⇩ USER-PROGRAMMABLE LEDS ⇨⇩ TRIP & ALARMS LEDS

■ **TRIP & ALARM LEDS** ■	⇔	**TRIP LED INPUT:** **Off**	Range: FlexLogic operand
	⇩	**ALARM LED INPUT:** **Off**	Range: FlexLogic operand

The trip and alarm LEDs are in the first LED column (enhanced and graphical front panels) and on LED panel 1 (basic front panel). Each LED can be programmed to turn on when the selected FlexLogic operand is in the logic 1 state.

5.3.12.5 User-programmable LED 1(48)

SETTINGS ⇨ PRODUCT SETUP ⇨⇩ USER-PROGRAMMABLE LEDS ⇨⇩ USER-PROGRAMMABLE LED 1(48)

■ **USER-PROGRAMMABLE** ■ **LED 1**	⇔	**LED 1 OPERAND:** **Off**	Range: FlexLogic operand
	⇧	**LED 1 TYPE:** **Self-Reset**	Range: Self-Reset, Latched

For the enhanced and basic front panels, there are 48 amber LEDs across the relay LED panels. Each of these indicators can be programmed to illuminate when the selected FlexLogic operand is in the logic 1 state.

For the basic front panel, the LEDs are located as follows:

- LED Panel 2 — User-programmable LEDs 1 through 24
- LED Panel 3 — User programmable LEDs 25 through 48

For the enhanced front panel, the LEDs are located as follows:

- LED column 2 — User-programmable LEDs 1 through 12
- LED column 3 — User-programmable LEDs 13 through 24
- LED column 4 — User-programmable LEDs 25 through 36
- LED column 5 — User-programmable LEDs 37 through 48

See the LED Indicators section in chapter 4 for information on the location of these indexed LEDs.

The user-programmable LED settings select the FlexLogic operands that control the LEDs. If the **LED 1 TYPE** setting is "Self-Reset" (the default setting), the LED illumination tracks the state of the selected LED operand. If the **LED 1 TYPE** setting is "Latched," the LED, once lit, remains so until reset by the front panel **RESET** button, from a remote device via a communications channel, or from any programmed operand, even if the LED operand state de-asserts.

Table 5-12: Recommended settings for user-programmable LEDs

Setting	Parameter	Setting	Parameter
LED 1 operand	SETTING GROUP ACT 1	LED 13 operand	Off
LED 2 operand	SETTING GROUP ACT 2	LED 14 operand	BREAKER 2 OPEN
LED 3 operand	SETTING GROUP ACT 3	LED 15 operand	BREAKER 2 CLOSED
LED 4 operand	SETTING GROUP ACT 4	LED 16 operand	BREAKER 2 TROUBLE
LED 5 operand	SETTING GROUP ACT 5	LED 17 operand	SYNC 1 SYNC OP
LED 6 operand	SETTING GROUP ACT 6	LED 18 operand	SYNC 2 SYNC OP
LED 7 operand	Off	LED 19 operand	Off
LED 8 operand	Off	LED 20 operand	Off
LED 9 operand	BREAKER 1 OPEN	LED 21 operand	Off
LED 10 operand	BREAKER 1 CLOSED	LED 22 operand	Off
LED 11 operand	BREAKER 1 TROUBLE	LED 23 operand	Off
LED 12 operand	Off	LED 24 operand	Off

See the figure in the Setting Groups section of the Control Elements section later in this chapter for an example of group activation.

5.3.12.6 Event cause LED 1(9)

SETTINGS ⇨ PRODUCT SETUP ⇨⇩ USER-PROGRAMMABLE LEDS ⇨⇩ EVENT CAUSE LED 1(9)

5

■ EVENT CAUSE ■ LED 1	⇔	**LED 1 OPERAND:** **LED PICKUP**	Range: FlexLogic operand
	⇩	**LED 1 COLOR:** **Green**	Range: Red, Green, Orange
	⇧	**LED 1 TYPE:** **Self-Reset**	Range: Self-Reset, Latched

For the graphical front panel, the event cause LED settings select the FlexLogic operands that control the LEDs.

LED 1 TYPE — If set to "Self-Reset," the LED illumination tracks the state of the selected LED operand. If set to "Latched," the LED, once lit, remains so even the LED operand state already de-asserts, until reset by the front panel **RESET** button, from a remote device via a communications channel, or from any programmed operand.

The table outlines default input operand and output operands for each event cause LED.

Table 5-13: Default input and output operand for event cause LEDs

LED	Default input operand	Output operand	Default color
Event Cause LED 1	LED PICKUP	EVENT CAUSE LED 1	Green
Event Cause LED 2	LED VOLTAGE	EVENT CAUSE LED 2	Orange
Event Cause LED 3	LED CURRENT	EVENT CAUSE LED 3	Orange
Event Cause LED 4	LED FREQUENCY	EVENT CAUSE LED 4	Orange
Event Cause LED 5	LED OTHER	EVENT CAUSE LED 5	Orange
Event Cause LED 6	LED PHASE A	EVENT CAUSE LED 6	Orange
Event Cause LED 7	LED PHASE B	EVENT CAUSE LED 7	Orange
Event Cause LED 8	LED PHASE C	EVENT CAUSE LED 8	Orange
Event Cause LED 9	LED NEUTRAL/GROUND	EVENT CAUSE LED 9	Orange

5.3.13 User-programmable self-tests

SETTINGS ⇨ PRODUCT SETUP ⇨⇩ USER-PROGRAMMABLE SELF TESTS

■ USER-PROGRAMMABLE ■ SELF TESTS	⇔	DIRECT RING BREAK FUNCTION: Enabled	Range: Disabled, Enabled. Valid for units equipped with Direct Input/Output module.
	⇩	DIRECT DEVICE OFF FUNCTION: Enabled	Range: Disabled, Enabled. Valid for units equipped with Direct Input/Output module.
	⇩	RxGOOSE OFF FUNCTION: Enabled	Range: Disabled, Enabled
	⇩	FIRST ETHERNET FAIL FUNCTION: Disabled	Range: Disabled, Enabled
	⇩	SEC. ETHERNET FAIL FUNCTION: Disabled	Range: Disabled, Enabled
	⇩	THIRD ETHERNET FAIL FUNCTION: Disabled	Range: Disabled, Enabled
	⇩	SFP MODULE FAIL FUNCTION: Disabled	Range: Disabled, Enabled
	⇩	BATTERY FAIL FUNCTION: Enabled	Range: Disabled, Enabled
	⇩	SNTP FAIL FUNCTION: Enabled	Range: Disabled, Enabled
	⇩	IRIG-B FAIL FUNCTION: Enabled	Range: Disabled, Enabled
	⇩	PTP FAIL FUNCTION: Enabled	Range: Disabled, Enabled
	⇩	SV STREAM TROUBLE FUNCTION: Enabled	Range: Disabled, Enabled
	⇩	PB ETH PORT 1a FAIL FUNCTION: Disabled	Range: Disabled, Enabled
		⇩	
	⇩	PB ETH PORT Port 4b FAIL FUNCTION: Disabled	Range: Disabled, Enabled
	⇩	PB SFP MODUL 1a FAIL FUNCTION: Disabled	Range: Disabled, Enabled
		⇩	
	⇧	PB SFP MODUL 4b FAIL FUNCTION: Disabled	Range: Disabled, Enabled

All major self-test alarms are reported automatically with their corresponding FlexLogic operands, events, and targets.

This settings menu allows enabling and disabling of most minor self-test alarms.

When in the Disabled mode, minor alarms do not assert a FlexLogic operand, write to the event recorder, or display target messages. Moreover, they do not trigger the ANY MINOR ALARM or ANY SELF-TEST messages. When in Enabled mode, minor alarms continue to function along with other major and minor alarms. See the Relay Self-tests section in chapter 7 for information on major and minor self-test alarms.

When using the graphical front panel and setting annunciator alarms, the function needs to be enabled here too, else the alarm is not triggered.

PB SFP MODUL # FAIL FUNCTION — For order code H85, ports 2a, 2b, 4a, 4b are not available.

5.3.14 Control pushbuttons

SETTINGS ⇨ PRODUCT SETUP ⇨⇩ CONTROL PUSHBUTTONS ⇨ CONTROL PUSHBUTTON 1(7)

■ CONTROL ■ PUSHBUTTON 1	⇔	CNTRL PUSHBUTTN 1 ID CTRL PB 1	Range: up to 20 alphanumeric characters
	⇩	CONTROL PUSHBUTTON 1 FUNCTION: Disabled	Range: Disabled, Enabled
	⇧	CONTROL PUSHBUTTON 1 EVENTS: Disabled	Range: Disabled, Enabled

This feature is supported with enhanced and basic front panels.

There are three standard control pushbuttons, labeled USER 1, USER 2, and USER 3, on the basic and enhanced front panels. These are user-programmable and can be used for various applications such as performing an LED test, switching setting groups, and invoking and scrolling though user-programmable displays.

Firmware revisions 3.2x and older use these three pushbuttons for manual breaker control. This functionality has been retained—if the breaker control feature is configured to use the three pushbuttons, they cannot be used as user-programmable control pushbuttons.

The locations of the control pushbuttons are shown in the following figures.

Figure 5-56: Control pushbuttons (enhanced front panel)

An additional four control pushbuttons are included on the basic front panel when the N60 is ordered with the 12 user-programmable pushbutton option.

Figure 5-57: Control pushbuttons (basic front panel)

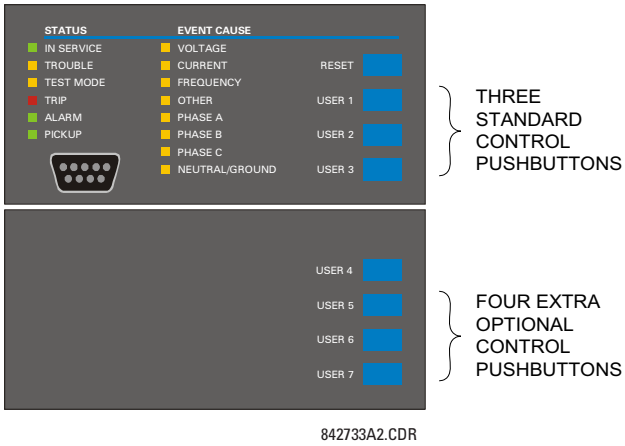

Control pushbuttons are not typically used for critical operations and are not protected by the control password. However, by supervising their output operands, the user can dynamically enable or disable control pushbuttons for security reasons.

Each control pushbutton asserts its own FlexLogic operand. Each operand need to be configured appropriately to perform the required function. Each operand remains asserted as long as the pushbutton is pressed and resets when the pushbutton is released. A dropout delay of 100 ms is incorporated to ensure fast pushbutton manipulation is recognized by various features that can use control pushbuttons as inputs.

An event is logged in the event record (as per user setting) when a control pushbutton is pressed. No event is logged when the pushbutton is released. The front panel keys (including control keys) cannot be operated simultaneously—a given key must be released before the next one can be pressed.

The control pushbuttons become user-programmable only if the breaker control feature is not configured for manual control via the USER 1 through 3 pushbuttons as shown. If configured for manual control, breaker control typically uses the larger, optional user-programmable pushbuttons, making the control pushbuttons available for other user applications.

Figure 5-58: Control pushbutton logic

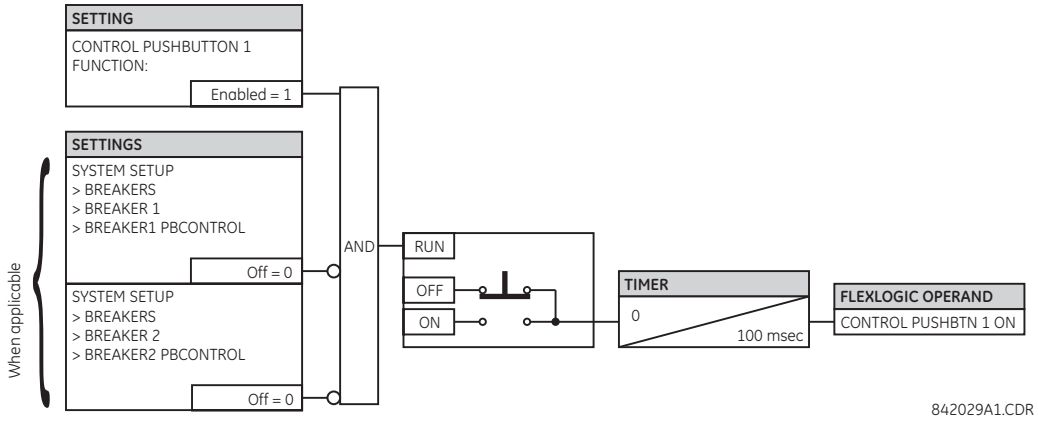

5.3.15 User-programmable pushbuttons

SETTINGS ⇨ PRODUCT SETUP ⇨⇩ USER-PROGRAMMABLE PUSHBUTTONS ⇨ USER PUSHBUTTON 1(48)

■ USER PUSHBUTTON 1 ■	⇔	PUSHBUTTON 1 FUNCTION: Disabled	Range: Self-Reset, Latched, Disabled
	⇩	PUSHBTN 1 ID TEXT: USER PB 1	Range: up to 20 alphanumeric characters
	⇩	PUSHBTN 1 ON TEXT: PUSHBTN 1 ON	Range: up to 20 alphanumeric characters
	⇩	PUSHBTN 1 OFF TEXT: PUSHBTN 1 OFF	Range: up to 20 alphanumeric characters
	⇩	PUSHBTN 1 HOLD: 0.1 s	Range: 0.0 to 10.0 s in steps of 0.1
	⇩	PUSHBTN 1 SET: Off	Range: FlexLogic operand
	⇩	PUSHBTN 1 RESET: Off	Range: FlexLogic operand
	⇩	PUSHBTN 1 AUTORST: Disabled	Range: Disabled, Enabled
	⇩	PUSHBTN 1 AUTORST DELAY: 1.0 s	Range: 0.2 to 600.0 s in steps of 0.1
	⇩	PUSHBTN 1 REMOTE: Off	Range: FlexLogic operand

⇕	**PUSHBTN 1 LOCAL: Off**	Range: FlexLogic operand
⇕	**PUSHBTN 1 DROP-OUT TIME: 0.00 s**	Range: 0 to 60.00 s in steps of 0.05
⇕	**PUSHBTN 1 LED CTL: Off**	Range: FlexLogic operand
⇕	**PUSHBTN 1 MESSAGE: Disabled**	Range: Disabled, Normal, High Priority
⇧	**PUSHBUTTON 1 EVENTS: Disabled**	Range: Disabled, Enabled

SOFTWARE OPTION

This feature is optional, specified at the time of ordering.

User-programmable pushbuttons provide an easy and error-free method of entering digital state (on, off) information. The number depends on the front panel ordered.

- Enhanced horizontal front panel — 16 user-programmable pushbuttons
- Enhanced vertical front panel — 6 user-programmable pushbuttons
- Basic horizontal front panel — 12 user-programmable pushbuttons
- Graphical front panel — 48 user-programmable pushbuttons (eight physical pushbuttons, 40 graphical interface pushbuttons)

5

NOTE

User-programmable pushbuttons require a front panel with that option. If the front panel was ordered separately, update the EnerVista software under **Maintenance > Change Front Panel**.

The digital state can be entered locally (by directly pressing the front panel pushbutton or optional graphical front panel interface) or remotely (via FlexLogic operands) into FlexLogic equations, protection elements, and control elements. Typical applications include breaker control, autorecloser blocking, and setting groups changes. For example, set pushbuttons 1 to 5 to select settings groups 1 to 5, or set pushbutton 1 to clear event records. The user-programmable pushbuttons are under the control level of password protection.

Example

To clear event records using pushbutton 1, set **Settings > Product Setup > Clear Relay Records > Clear Event Records** to FlexLogic operand PUSHBUTTON 1 ON. Then program the pushbutton by setting **Settings > Product Setup > User-Programmable Pushbuttons > Pushbutton 1 Function** to "Self-reset." For a graphical front panel, to use a side pushbutton to clear the event records, it also needs to be programmed in a single-line diagram.

The figures show user-configurable pushbuttons for the front panels.

Figure 5-59: User-programmable pushbuttons (enhanced front panel)

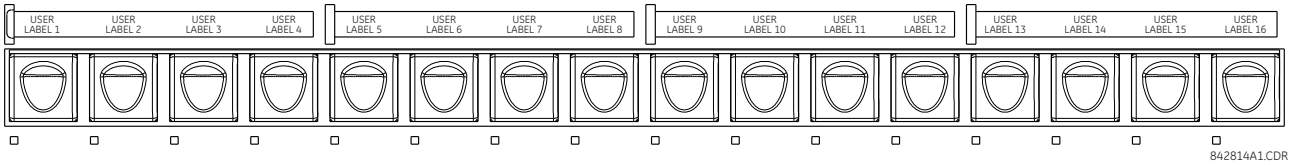

Figure 5-60: User-programmable pushbuttons (basic front panel)

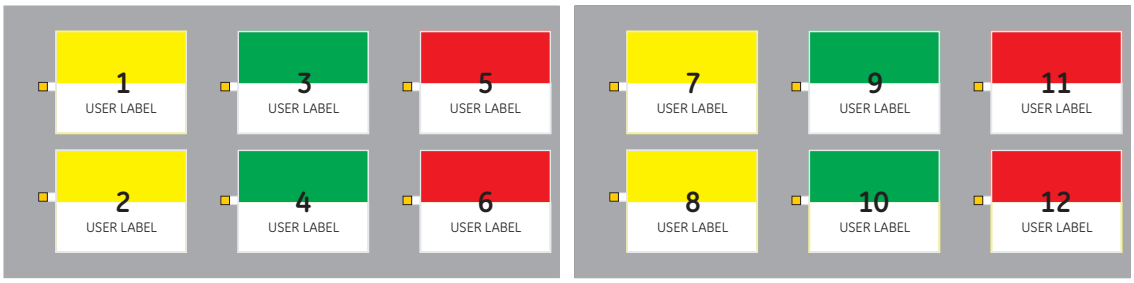

842779A1.cdr

Figure 5-61: User-programmable pushbuttons (graphical front panel)

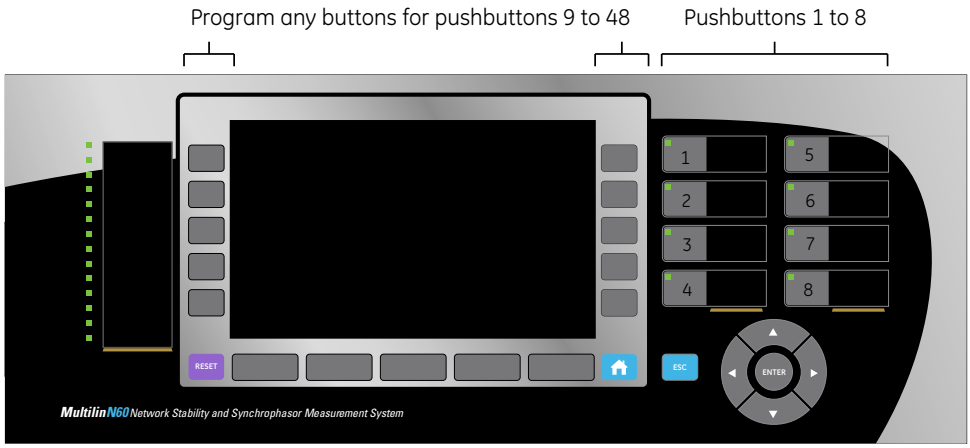

859802A1.CDR

Front panel pushbuttons and LEDs can be custom labeled as outlined in the Front Panel Labeling section in the previous chapter.

Each pushbutton asserts its own "On" and "Off" FlexLogic operands (for example, PUSHBUTTON 1 ON and PUSHBUTTON 1 OFF). These operands are available for each pushbutton and are used to program specific actions. If any pushbutton is active, the ANY PB ON operand is asserted.

Each pushbutton has an associated LED indicator. By default, this indicator displays the present status of the corresponding pushbutton (on or off). However, each LED indicator can be assigned to any FlexLogic operand through the **PUSHBTN 1 LED CTL** setting.

The activation and deactivation of user-programmable pushbuttons depends on whether latched or self-reset mode is programmed.

- **Latched mode** — In latched mode, a pushbutton can be set (activated) by asserting the operand assigned to the **PUSHBTN 1 SET** setting, by directly pressing the associated front panel pushbutton, or with the graphical front panel interface. The state of each pushbutton is stored in non-volatile memory and maintained through a loss of control power.

  The pushbutton is reset (deactivated) in latched mode by asserting the operand assigned to the **PUSHBTN 1 RESET** setting, by directly pressing the active front panel pushbutton, or with the graphical front panel interface.

  It can also be programmed to reset automatically through the **PUSHBTN 1 AUTORST** and **PUSHBTN 1 AUTORST DELAY** settings. These settings enable the autoreset timer and specify the associated time delay. The autoreset timer can be used in select-before-operate (SBO) breaker control applications, where the command type (close/open) or breaker location (feeder number) must be selected prior to command execution. The selection must reset automatically if control is not executed within a specified time period.
- **Self-reset mode** — In self-reset mode, a user-programmable pushbutton can be set (activated) by asserting the operand assigned to the **PUSHBTN 1 SET** setting, by pressing the front panel pushbutton, or by the graphical front panel

interface. A pushbutton remains active for the time it is pressed physically or pressed in the graphical front panel interface, plus the dropout time specified in the **PUSHBTN 1 DROP-OUT TIME** setting. If the pushbutton is activated via FlexLogic, the pulse duration is specified by the **PUSHBTN 1 DROP-OUT TIME** only. The time the operand assigned to the **PUSHBTN 1 SET** setting remains On has no effect on the pulse duration.

NOTE

The pulse duration of the remote set or local front panel pushbutton must be at least 56 ms for a 60 Hz system or 60 ms for a 50 Hz system to operate the pushbutton. This allows the user-programmable pushbuttons to properly operate during power cycling events and various system disturbances that can cause transient assertion of the operating signals.

The local and remote operation of each user-programmable pushbutton can be inhibited through the **PUSHBTN 1 LOCAL** and **PUSHBTN 1 REMOTE** settings. If local inhibit is applied, the pushbutton ignores set and reset commands executed through the front panel pushbuttons. If remote inhibit is applied, the pushbutton ignores set and reset commands executed through FlexLogic operands.

The inhibit functions are not applied to the autoreset feature. The inhibit function can be used in SBO control operations to prevent user-programmable pushbutton activation and ensuring “one-at-a-time” select operation.

The inhibit functions can also be used to prevent pushbutton activation from the accidental pressing of the front panel pushbuttons. The separate inhibit of the local and remote operation simplifies the implementation of local/remote control supervision.

Pushbutton states can be logged by the event recorder. User-defined messages can also be associated with each pushbutton and displayed on basic and enhanced front panels when the user-programmable pushbutton is activated, and when in the latched mode when the user-programmable pushbutton is deactivated. With the graphical front panel interface, instead of messages, the status of user-programmable pushbuttons can display on a single-line diagram and can also display in annunciator page windows and in actual values page cells.

For the graphical front panel, the pushbuttons 1 to 8 are linked to the eight physical pushbuttons, and pushbuttons 9 and above are mapped to the graphical interface pushbuttons. To set the buttons for pushbuttons 9 and above, access **Settings > Product Setup > Graphical Panel > Single Line Diagram Editor**, click the PB symbol in the toolbox, then configure pushbuttons 9 and above.

PUSHBUTTON 1 FUNCTION — This setting selects the mode of the pushbutton (Self-Reset, Latched, Disabled). If set to “Disabled,” the pushbutton is not active and the corresponding FlexLogic operands (both “On” and “Off”) are de-asserted. If set to “Latched”, the pushbutton remains on until reset.

PUSHBTN 1 ID TEXT — This setting specifies the top 20-character line of the user-programmable pushbutton message and is intended to provide ID information of the pushbutton. For example, the text displays in the Event Record. See the User-definable Displays section in this chapter for instructions on how to enter alphanumeric characters from the keypad. On a graphical front panel, this setting instead controls the label of the user-programmable pushbutton component on single-line diagrams.

PUSHBTN 1 ON TEXT — This setting specifies the bottom 20-character line of the user-programmable pushbutton message and is displayed when the pushbutton is in the “on” position. See the User-definable Displays section for instructions on entering alphanumeric characters from the keypad. On a graphical front panel, this setting instead controls the on status text of the user-programmable pushbutton component on single-line diagrams. This setting is not applied to the physical pushbuttons on the graphical front panel.

PUSHBTN 1 OFF TEXT — This setting specifies the bottom 20-character line of the user-programmable pushbutton message and displays when the pushbutton is deactivated and the **PUSHBUTTON 1 FUNCTION** is “Latched.” A message does not display when the **PUSHBUTTON 1 FUNCTION** is “Self-reset” as the pushbutton operand status is implied to be “Off” upon its release. The length of the “Off” message is configured with the **PRODUCT SETUP ⇨⇩ DISPLAY PROPERTIES ⇨ FLASH MESSAGE TIME** setting. On a graphical front panel, this setting instead controls the off status text of the user-programmable pushbutton component on single-line diagrams. This setting is not applied to the physical pushbuttons on the graphical front panel.

PUSHBTN 1 HOLD — This setting specifies the time required for a front panel pushbutton to be pressed before it is deemed active. This timer is reset upon release of the pushbutton. Note that user-programmable pushbutton operation requires the front panel pushbutton to be pressed a minimum of 56 ms for a 60 Hz system or 60 ms for a 50 Hz system. This minimum time is required prior to activating the user-programmable pushbutton hold timer.

PUSHBTN 1 SET — This setting assigns the FlexLogic operand serving to activate the user-programmable pushbutton element. The duration of the incoming set signal must be at least 56 ms for a 60 Hz system or 60 ms for a 50 Hz system.

PUSHBTN 1 RESET — This setting assigns the FlexLogic operand serving to deactivate the user-programmable pushbutton element. This setting is applicable only if the user-programmable pushbutton is in "Latched" mode.

PUSHBTN 1 AUTORST — This setting enables the user-programmable pushbutton autoreset feature. This setting is applicable only if the pushbutton is in "Latched" mode.

PUSHBTN 1 AUTORST DELAY — This setting specifies the time delay for automatic reset of the pushbutton when in "Latched" mode.

PUSHBTN 1 REMOTE — This setting assigns the FlexLogic operand serving to inhibit user-programmable pushbutton operation from the operand assigned to the **PUSHBTN 1 SET** or **PUSHBTN 1 RESET** settings.

PUSHBTN 1 LOCAL — This setting assigns the FlexLogic operand serving to inhibit user-programmable pushbutton operation from the front panel pushbuttons. This inhibit functionality is not applicable to pushbutton autoreset.

PUSHBTN 1 DROP-OUT TIME — This setting applies only to "Self-Reset" mode and specifies the duration of the user-programmable pushbutton active status after the front panel pushbutton or graphical front panel interface pushbutton has been released. When activated remotely, this setting specifies the entire activation time of the pushbutton; the length of time the operand selected by **PUSHBTN 1 SET** remains on has no effect on the pulse duration.

PUSHBTN 1 LED CTL — This setting assigns the FlexLogic operand serving to drive the front panel pushbutton LED. If this setting is "Off," then LED operation is directly linked to the PUSHBUTTON 1 ON operand. This setting is not applied to Pushbuttons 9 and above on the graphical front panel, where the label background shows the orange glow color for the "on" state.

PUSHBTN 1 MESSAGE — This setting controls the behavior of the user-programmable pushbutton on message that is programmed in the **PUSHBTN 1 ID** and **PUSHBTN 1 ON TEXT** settings, and the behavior of the user-programmable pushbutton off message that is programmed in the **PUSHBTN 1 ID** and **PUSHBTN 1 OFF TEXT** settings. This settings has no effect on the graphical front panel.

When set to "Disabled" user-programmable pushbutton messages do not display. Otherwise the on message displays when the user-programmable pushbutton becomes activated, and if in the "Latched" mode the off message displays when the user-programmable pushbutton becomes deactivated.

When set to "Normal", the duration the message displays is as specified by the **FLASH MESSAGE TIME** setting.

When set to "High Priority", the duration of the off message is as specified by the **FLASH MESSAGE TIME** setting, but the on message is displayed as long as the user-programmable pushbutton is activated. While activated, target and other messages are suppressed. To allow front panel keypad operation, when a keypad button is pressed the message is suppressed for 10 seconds.

PUSHBUTTON 1 EVENTS — If this setting is enabled, each user-programmable pushbutton state change is logged as an event into the event recorder.

The figures show the user-programmable pushbutton logic.

Figure 5-62: User-programmable pushbutton logic (Sheet 1 of 2)

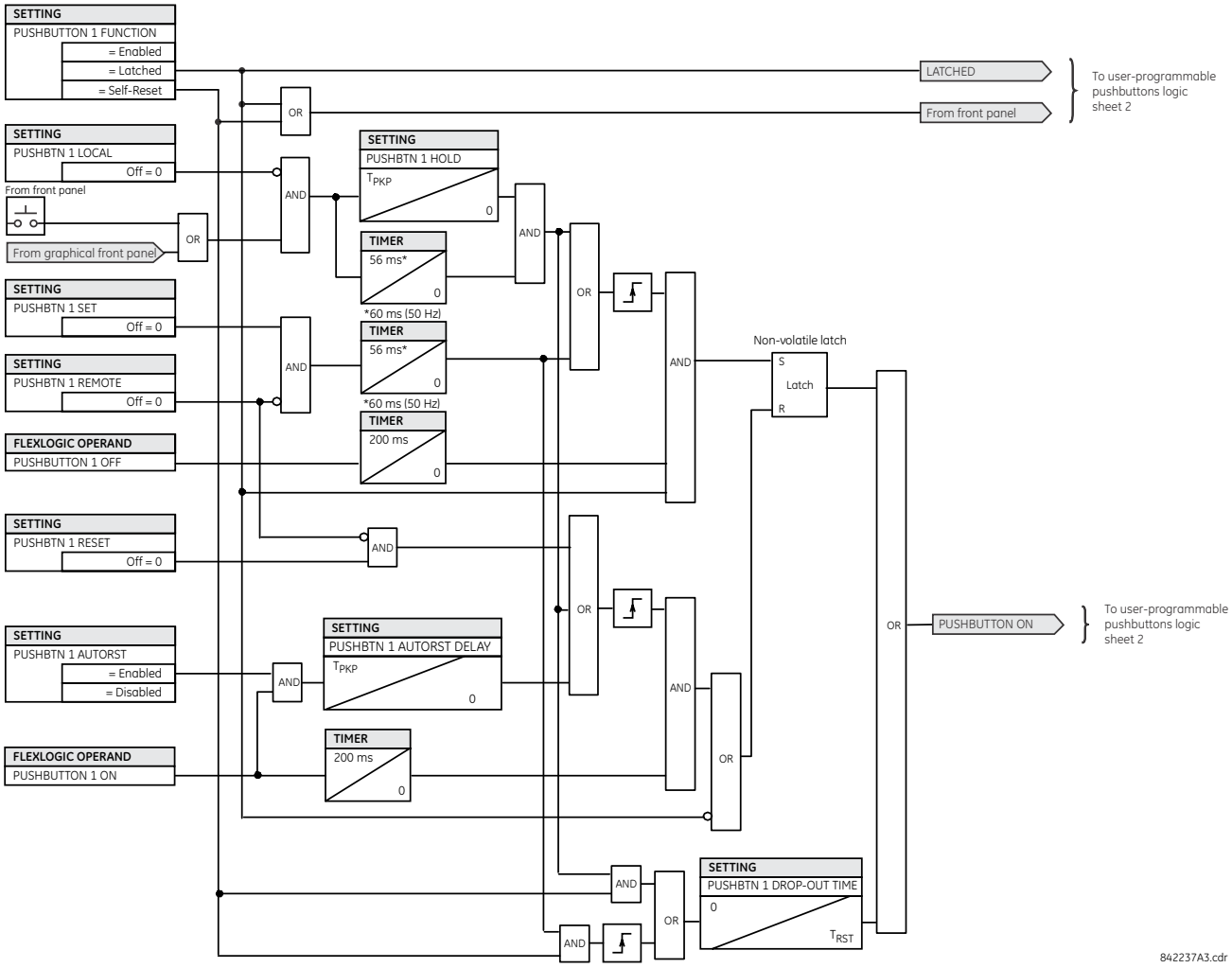

Figure 5-63: User-programmable pushbutton logic (Sheet 2 of 2)

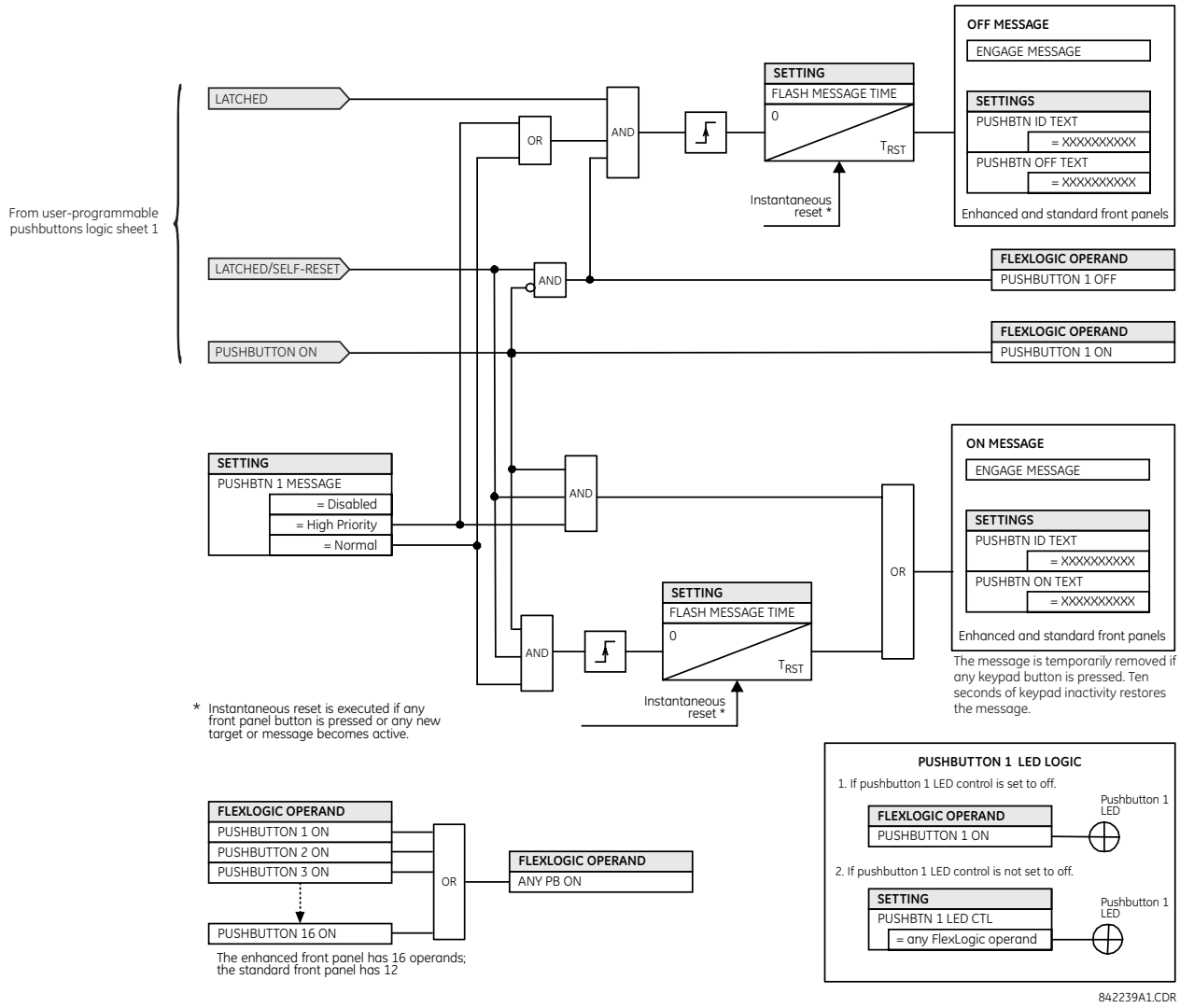

5.3.16 Flex state parameters

SETTINGS ⇨ PRODUCT SETUP ⇨⇩ FLEX STATE PARAMETERS

■ FLEX STATE ■ PARAMETERS	⇔	PARAMETER 1: Off	Range: FlexLogic operand
		⇩	
	⇧	PARAMETER 256: Off	Range: FlexLogic operand

This feature provides a mechanism where any of 256 selected FlexLogic operand states can be used for efficient monitoring. The feature allows user-customized access to the FlexLogic operand states in the relay. The state bits are packed so that 16 states are readable in a single Modbus register. The state bits can be configured so that all states of interest are available in a minimum number of Modbus registers.

The state bits can be read out in the "Flex States" register array beginning at Modbus address 0900h. Sixteen states are packed into each register, with the lowest-numbered state in the lowest-order bit. Sixteen registers accommodate the 256 state bits.

5.3.17 User-definable displays

5.3.17.1 Menu

SETTINGS ⇨ PRODUCT SETUP ⇨⇩ USER-DEFINABLE DISPLAYS

■ USER-DEFINABLE ■ DISPLAYS	⇔	INVOKE AND SCROLL: Off	Range: FlexLogic operand
	⇩	■ USER DISPLAY 1 ■	See below
	⇩		
	⇧	■ USER DISPLAY 16 ■	

This feature is supported with enhanced and basic front panels.

This menu provides a mechanism for manually creating up to 16 user-defined information displays in a convenient viewing sequence in the **USER DISPLAY** menu (between the **TARGETS** and **ACTUAL VALUES** top-level menus). The sub-menus facilitate text entry and Modbus register data pointer options for defining the user display content.

This feature is not supported with the optional graphical front panel.

Once programmed, the user-definable displays can be viewed in two ways.

- **Keypad** — Use the **MENU** key to select the **USER DISPLAY** menu item to access the first user-definable display (note that only the programmed screens are displayed). The screens can be scrolled using the up and down arrow keys. The display disappears after the default message time-out period specified by the **PRODUCT SETUP ⇨⇩ DISPLAY PROPERTIES ⇨⇩ DEFAULT MESSAGE TIMEOUT** setting.
- **User-programmable control input** — The user-definable displays also respond to the **INVOKE AND SCROLL** setting. Any FlexLogic operand (in particular, the user-programmable pushbutton operands), can be used to navigate the programmed displays.

  On the rising edge of the configured operand (such as when the pushbutton is pressed), the displays are invoked by showing the last user-definable display shown during the previous activity. From this moment onward, the operand acts exactly as the down key and allows scrolling through the configured displays. The last display wraps up to the first one. The **INVOKE AND SCROLL** input and the down arrow key operate concurrently.

  When the default timer expires (set by the **DEFAULT MESSAGE TIMEOUT** setting), the relay starts to cycle through the user displays. The next activity of the **INVOKE AND SCROLL** input stops the cycling at the currently displayed user display, not at the first user-defined display. The **INVOKE AND SCROLL** pulses must last for at least 250 ms to take effect.

5.3.17.2 User display 1(16)

SETTINGS ⇨ PRODUCT SETUP ⇨⇩ USER-DEFINABLE DISPLAYS ⇨⇩ USER DISPLAY 1(16)

■ USER DISPLAY 1 ■	⇔	DISP 1 TOP LINE:	Range: up to 20 alphanumeric characters
	⇩	DISP 1 BOTTOM LINE:	Range: up to 20 alphanumeric characters
	⇩	DISP 1 ITEM 1: 0	Range: 0 to 65535 in steps of 1
	⇩		
	⇧	DISP 1 ITEM 5: 0	Range: 0 to 65535 in steps of 1

Any existing system display can be automatically copied into an available user display by selecting the existing display and pressing the **ENTER** key. The display then prompts with ADD TO USER DISPLAY LIST? After selecting "Yes," a message indicates that the selected display has been added to the user display list. When this type of entry occurs, the sub-menus are automatically configured with the proper content—this content can be edited subsequently.

This menu is used to enter user-defined text and user-selected Modbus-registered data fields into the particular user display. Each user display consists of two 20-character lines (top and bottom). The tilde (~) character is used to mark the start of a data field – the length of the data field needs to be accounted for. Up to five separate data fields can be entered in a user display – the *n*th tilde (~) refers to the *n*th item.

A user display can be entered from the front panel keypad or the EnerVista interface (preferred for convenience). The following procedure shows how to enter text characters in the top and bottom lines from the front panel keypad. Press the **HELP** key at any time for context sensitive help information.

1. Select the line to be edited.
2. Press the decimal key to enter text edit mode.
3. Use either **VALUE** key to scroll through the characters. A space is selected like a character.
4. Press the decimal key to advance the cursor to the next position.
5. Repeat step 3 and continue entering characters until the desired text is displayed.
6. Press the **ENTER** key to store the new settings.

To enter a numerical value for any of the five items (the *decimal form* of the selected Modbus address) from the front panel keypad, use the number keypad. Use the value of "0" for any items not being used. Use the **HELP** key at any selected system display (setting, actual value, or command) which has a Modbus address, to view the *hexadecimal form* of the Modbus address, then manually convert it to decimal form before entering it (EnerVista usage conveniently facilitates this conversion). See the Modbus Memory Map section earlier in this chapter for information on how to calculate the decimal value to enter on the front panel.

Use the **MENU** key to go to the user displays menu to view the user-defined content. The current user displays show in sequence, changing every four seconds. While viewing a user display, press the **ENTER** key and then select the 'Yes" option to remove the display from the user display list. Use the **MENU** key again to exit the user displays menu.

An example of user display setup and result is shown as follows.

■ **USER DISPLAY 1** ■	⇔	**DISP 1 TOP LINE:** **Current X ~ A**	Shows user-defined text with first tilde marker
	⇕	**DISP 1 BOTTOM LINE:** **Current Y ~ A**	Shows user-defined text with second tilde marker
	⇕	**DISP 1 ITEM 1:** **6016**	Shows decimal form of user-selected Modbus register address, corresponding to first tilde marker
	⇕	**DISP 1 ITEM 2:** **6357**	Shows decimal form of user-selected Modbus register address, corresponding to second tilde marker
	⇕	**DISP 1 ITEM 3:** **0**	This item is not being used. There is no corresponding tilde marker in top or bottom lines.
	⇕	**DISP 1 ITEM 4:** **0**	This item is not being used. There is no corresponding tilde marker in top or bottom lines.
	⇧	**DISP 1 ITEM 5:** **0**	This item is not being used. There is no corresponding tilde marker in top or bottom lines.
USER DISPLAYS	⇨	**Current X 0.850** **Current Y 0.327 A**	Shows the resultant display content

If the parameters for the top line and the bottom line items have the same units, then the unit is displayed on the bottom line only. The units are only displayed on both lines if the units specified both the top and bottom line items are different.

5.3.18 Direct inputs and outputs

5.3.18.1 Menu

SETTINGS ⇨ PRODUCT SETUP ⇨⇩ DIRECT I/O

■ DIRECT I/O ■	⇔	DIRECT OUTPUTS DEVICE ID: 1	Range: 1 to 16 in steps of 1
	⇩	DIRECT I/O CH1 RING CONFIGURATION: Yes	Range: Yes, No
	⇩	DIRECT I/O CH2 RING CONFIGURATION: Yes	Range: Yes, No
	⇩	DIRECT I/O DATA RATE: 64 kbps	Range: 64 kbps, 128 kbps
	⇩	DIRECT I/O CHANNEL CROSSOVER: Disabled	Range: Disabled, Enabled
	⇩	■ CRC ALARM CH1 ■	See page 5-159
	⇩	■ CRC ALARM CH2 ■	
	⇩	■ UNRETURNED ■ MESSAGES ALARM CH1	See page 5-160
	⇧	■ UNRETURNED ■ MESSAGES ALARM CH2	

5

SOFTWARE OPTION

This option is available when an Inter-Relay Communications card is specified at the time of ordering. With the option, direct inputs/outputs display by default. When you enable the teleprotection feature, direct I/O is not visible.

Direct inputs and outputs exchange status information (inputs and outputs) between UR-series relays connected directly via type 7 digital communications cards. The mechanism is very similar to IEC 61850 GOOSE, except that communications takes place over a non-switchable isolated network and is optimized for speed. On type 7 cards that support two channels, direct output messages are sent from both channels simultaneously. This effectively sends direct output messages both ways around a ring configuration. On type 7 cards that support one channel, direct output messages are sent only in one direction. Messages are resent (forwarded) when it is determined that the message did not originate at the receiver.

Direct Inputs and Outputs are initiated automatically and start running once at least one Direct Output in the given UR is set to anything but Off.

For the direct I/Os to function properly, all UR devices sending I/Os using an Inter-Relay Communications card must have identical firmware revisions.

NOTE

Teleprotection inputs/outputs and direct inputs/outputs are mutually exclusive. As such, they cannot be used simultaneously. Once teleprotection inputs and outputs are enabled, direct inputs and outputs are disabled, and vice versa.

Direct output message timing is similar to GOOSE message timing. Integrity messages (with no state changes) are sent at least every 1000 ms. Messages with state changes are sent within the main pass scanning the inputs and asserting the outputs unless the communication channel bandwidth has been exceeded. Two self-tests are performed and signaled by the following FlexLogic operands:

- DIRECT RING BREAK (direct input/output ring break) — Indicates that direct output messages sent from a UR-series relay are not being received back by the relay
- DIRECT DEVICE 1 OFF to DIRECT DEVICE 16 OFF (direct device offline) — Indicate that direct output messages from at least one direct device are not being received

Direct input and output settings are similar to remote input and output settings. The equivalent of the remote device name strings for direct inputs and outputs is the **DIRECT OUTPUT DEVICE ID** setting, which identifies the relay in all direct output messages. All UR-series IEDs in a ring need to have unique numbers assigned. The IED ID is used to identify the sender of the direct input and output message.

If the direct input and output scheme is configured to operate in a ring (**DIRECT I/O CH1 RING CONFIGURATION** or **DIRECT I/O CH2 RING CONFIGURATION** is "Yes"), all direct output messages are received back. If not, the direct input/output ring break self-test is triggered. The self-test error is signaled by the DIRECT RING BREAK FlexLogic operand.

Select the **DIRECT I/O DATA RATE** to match the data capabilities of the communications channel. All IEDs communicating over direct inputs and outputs must be set to the same data rate. UR-series IEDs equipped with dual-channel communications cards apply the same data rate to both channels. Delivery time for direct input and output messages is approximately 0.2 of a power system cycle at 128 kbps and 0.4 of a power system cycle at 64 kbps, per each "bridge."

Table 5-14: Direct input and output data rates

Module	Supported data rates
2A, 2B	64 kbps
2E, 2F (legacy modules)	64 kbps
2G, 2H	128 kbps
2I, 2J	64 kbps, 128 kbps
72, 73	64 kbps, 128 kbps
74, 75	64 kbps
76, 77	64 kbps
7A, 7B, 7C, 7D	64 kbps, 128 kbps
7E, 7F, 7G	64 kbps
7H, 7I, 7J, 7K	64 kbps, 128 kbps
7L, 7M, 7N, 7P, 7Q	64 kbps
7R, 7S	64 kbps
7T, 7W	64 kbps

NOTE

The G.703 modules are fixed at 64 kbps. The **DIRECT I/O DATA RATE** setting is not applicable to these modules.

The **DIRECT I/O CHANNEL CROSSOVER** setting applies to a N60 with dual-channel communication cards and allows crossing over messages from channel 1 to channel 2. This places all UR-series IEDs into one direct input and output network regardless of the physical media of the two communication channels.

The following application examples illustrate the basic concepts for direct input and output configuration. See the Inputs and Outputs section in this chapter for information on configuring FlexLogic operands (flags, bits) to be exchanged.

Example 1: Extending the input/output capabilities of a UR-series relay

Consider an application that requires additional quantities of contact inputs or output contacts or lines of programmable logic that exceed the capabilities of a single UR-series chassis. The problem is solved by adding an extra UR-series IED, such as the C30, to satisfy the additional input and output and programmable logic requirements. The two IEDs are connected via single-channel digital communication cards as shown in the figure.

Figure 5-64: Input and output extension via direct inputs and outputs

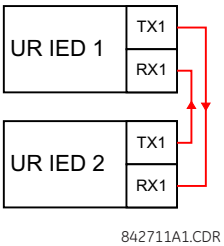

In this application, apply the following settings. For UR-series IED 1:

DIRECT OUTPUT DEVICE ID: "1"
DIRECT I/O CH1 RING CONFIGURATION: "Yes"
DIRECT I/O DATA RATE: "128 kbps"

For UR-series IED 2:

DIRECT OUTPUT DEVICE ID: "2"
DIRECT I/O CH1 RING CONFIGURATION: "Yes"
DIRECT I/O DATA RATE: "128 kbps"

The message delivery time is about 0.2 of power cycle in both ways (at 128 kbps); that is, from device 1 to device 2, and from device 2 to device 1. Different communications cards can be selected by the user for this back-to-back connection (for example: fiber, G.703, or RS422).

5

Example 2: Interlocking busbar protection

A simple interlocking busbar protection scheme could be accomplished by sending a blocking signal from downstream devices, say 2, 3, and 4, to the upstream device that monitors a single incomer of the busbar, as shown.

Figure 5-65: Sample interlocking busbar protection scheme

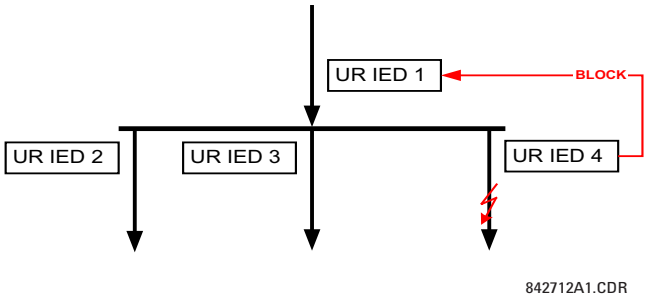

For increased reliability, a dual-ring configuration (shown as follows) is recommended for this application.

Figure 5-66: Interlocking bus protection scheme via direct inputs/outputs

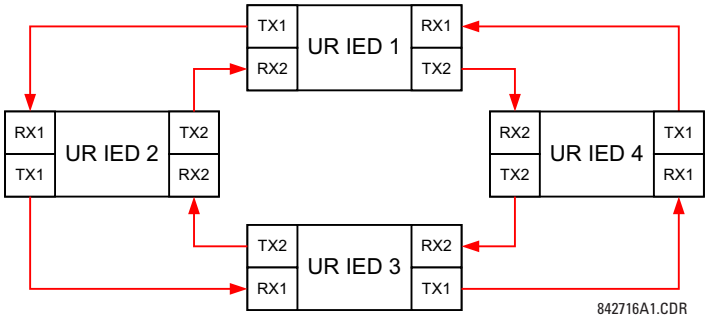

In this application, apply the following settings. For UR-series IED 1:

DIRECT OUTPUT DEVICE ID: "1"
DIRECT I/O CH1 RING CONFIGURATION: "Yes"
DIRECT I/O CH2 RING CONFIGURATION: "Yes"

For UR-series IED 2:

DIRECT OUTPUT DEVICE ID: "2"
DIRECT I/O CH1 RING CONFIGURATION: "Yes"
DIRECT I/O CH2 RING CONFIGURATION: "Yes"

For UR-series IED 3:

DIRECT OUTPUT DEVICE ID: "3"
DIRECT I/O CH1 RING CONFIGURATION: "Yes"
DIRECT I/O CH2 RING CONFIGURATION: "Yes"

For UR-series IED 4:

DIRECT OUTPUT DEVICE ID: "4"
DIRECT I/O CH1 RING CONFIGURATION: "Yes"
DIRECT I/O CH2 RING CONFIGURATION: "Yes"

Message delivery time is approximately 0.2 of power system cycle (at 128 kbps) times number of 'bridges' between the origin and destination. Dual-ring configuration effectively reduces the maximum 'communications distance' by a factor of two.

In this configuration the following delivery times are expected (at 128 kbps) if both rings are healthy:

IED 1 to IED 2: 0.2 of power system cycle
IED 1 to IED 3: 0.4 of power system cycle
IED 1 to IED 4: 0.2 of power system cycle
IED 2 to IED 3: 0.2 of power system cycle
IED 2 to IED 4: 0.4 of power system cycle
IED 3 to IED 4: 0.2 of power system cycle

If one ring is broken (say TX2-RX2) the delivery times are as follows:

IED 1 to IED 2: 0.2 of power system cycle
IED 1 to IED 3: 0.4 of power system cycle
IED 1 to IED 4: 0.6 of power system cycle
IED 2 to IED 3: 0.2 of power system cycle
IED 2 to IED 4: 0.4 of power system cycle
IED 3 to IED 4: 0.2 of power system cycle

A coordinating timer for this bus protection scheme could be selected to cover the worst case scenario (0.4 of a power system cycle). Upon detecting a broken ring, the coordination time is adaptively increased to 0.6 of a power system cycle. The complete application requires addressing a number of issues, such as failure of both the communications rings, failure or out-of-service conditions of one of the relays, and so on. Self-monitoring flags of the direct inputs and outputs feature primarily are used to address these concerns.

Example 3: Pilot-aided schemes

Consider the three-terminal line protection application shown.

Figure 5-67: Three-terminal line application

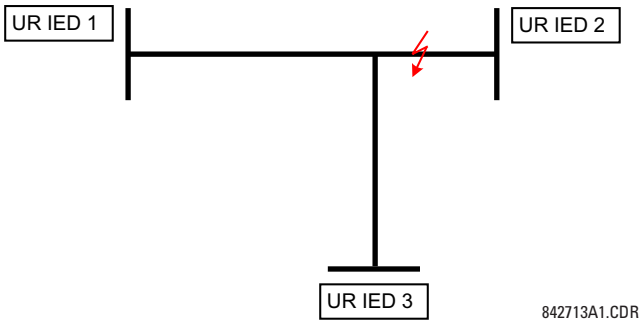

A permissive pilot-aided scheme can be implemented in a two-ring configuration, shown as follows (IEDs 1 and 2 constitute a first ring, while IEDs 2 and 3 constitute a second ring).

Figure 5-68: Single-channel open loop configuration

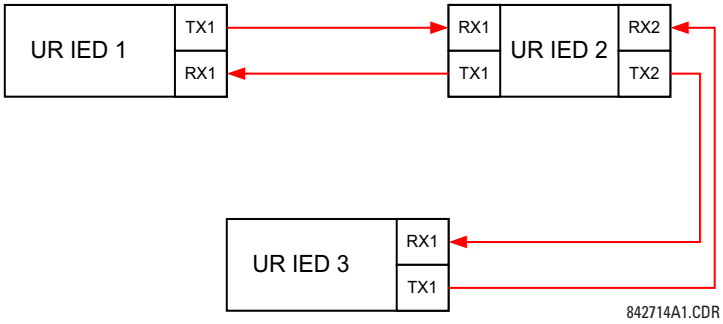

In this application, apply the following settings. For UR-series IED 1:

DIRECT OUTPUT DEVICE ID: "1"
DIRECT I/O CH1 RING CONFIGURATION: "Yes"
DIRECT I/O CH2 RING CONFIGURATION: "Yes"

For UR-series IED 2:

DIRECT OUTPUT DEVICE ID: "2"
DIRECT I/O CH1 RING CONFIGURATION: "Yes"
DIRECT I/O CH2 RING CONFIGURATION: "Yes"

For UR-series IED 3:

DIRECT OUTPUT DEVICE ID: "3"
DIRECT I/O CH1 RING CONFIGURATION: "Yes"
DIRECT I/O CH2 RING CONFIGURATION: "Yes"

In this configuration the following delivery times are expected (at 128 kbps):

IED 1 to IED 2: 0.2 of power system cycle
IED 1 to IED 3: 0.5 of power system cycle
IED 2 to IED 3: 0.2 of power system cycle

In this scheme, IEDs 1 and 3 do not communicate directly. IED 2 must be configured to forward the messages as explained in the Inputs and Outputs section. Implement a blocking pilot-aided scheme with more security and, ideally, faster message delivery time. This is accomplished using a dual-ring configuration as shown here.

Figure 5-69: Dual-channel closed loop (dual-ring) configuration

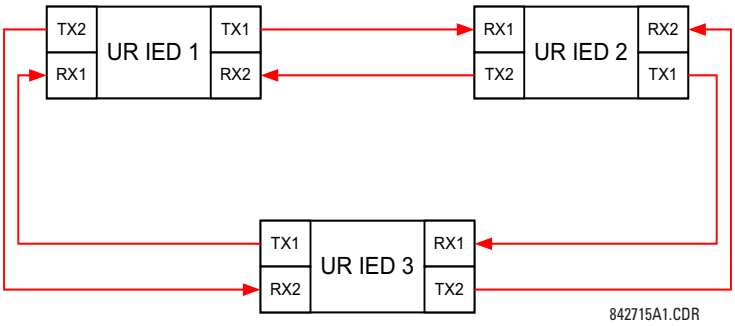

In this application, apply the following settings. For UR-series IED 1:

DIRECT OUTPUT DEVICE ID: "1"
DIRECT I/O CH1 RING CONFIGURATION: "Yes"
DIRECT I/O CH2 RING CONFIGURATION: "Yes"

For UR-series IED 2:

DIRECT OUTPUT DEVICE ID: "2"
DIRECT I/O CH1 RING CONFIGURATION: "Yes"
DIRECT I/O CH2 RING CONFIGURATION: "Yes"

For UR-series IED 3:

DIRECT OUTPUT DEVICE ID: "3"
DIRECT I/O CH1 RING CONFIGURATION: "Yes"
DIRECT I/O CH2 RING CONFIGURATION: "Yes"

In this configuration the following delivery times are expected (at 128 kbps) if both the rings are healthy:

IED 1 to IED 2: 0.2 of power system cycle
IED 1 to IED 3: 0.2 of power system cycle
IED 2 to IED 3: 0.2 of power system cycle

The two communications configurations can be applied to both permissive and blocking schemes. Take speed, reliability, and cost into account when selecting the required architecture.

5.3.18.2 CRC alarm CH1(2)

SETTINGS ⇨ PRODUCT SETUP ⇨⇩ DIRECT I/O ⇨⇩ CRC ALARM CH1(2)

■ **CRC ALARM CH1** ■	⇔	**CRC ALARM CH1 FUNCTION: Disabled**	Range: Enabled, Disabled
	⇩	**CRC ALARM CH1 MESSAGE COUNT: 600**	Range: 100 to 10000 in steps of 1
	⇩	**CRC ALARM CH1 THRESHOLD: 10**	Range: 1 to 1000 in steps of 1
	⇧	**CRC ALARM CH1 EVENTS: Disabled**	Range: Enabled, Disabled

The N60 checks integrity of the incoming direct input and output messages using a 32-bit CRC. The CRC alarm function is available for monitoring the communication medium noise by tracking the rate of messages failing the CRC check. The monitoring function counts all incoming messages, including messages that failed the CRC check. A separate counter adds up messages that failed the CRC check. When the failed CRC counter reaches the user-defined level specified by the **CRC ALARM CH1 THRESHOLD** setting within the user-defined message count **CRC ALARM 1 CH1 COUNT**, the DIR IO CH1 CRC ALARM FlexLogic operand is set.

When the total message counter reaches the user-defined maximum specified by the **CRC ALARM CH1 MESSAGE COUNT** setting, both the counters reset and the monitoring process is restarted.

Configure the operand to drive an output contact, user-programmable LED, or selected communication-based output. Latching and acknowledging conditions—if required—are programmed accordingly.

The CRC alarm function is available on a per-channel basis. The total number of direct input and output messages that failed the CRC check is available as the **ACTUAL VALUES ⇨ STATUS ⇨⇩ DIRECT INPUTS ⇨⇩ CRC FAIL COUNT CH1** actual value.

- **Message count and length of the monitoring window** — To monitor communications integrity, the relay sends 1 message per second (at 64 kbps) or 2 messages per second (at 128 kbps) even if there is no change in the direct outputs. For example, setting the **CRC ALARM CH1 MESSAGE COUNT** to "10000," corresponds a time window of about 160 minutes at 64 kbps and 80 minutes at 128 kbps. If the messages are sent faster as a result of direct outputs activity, the monitoring time interval shortens. Take this into account when determining the **CRC ALARM CH1 MESSAGE COUNT** setting. For example, if the requirement is a maximum monitoring time interval of 10 minutes at 64 kbps, then the **CRC ALARM CH1 MESSAGE COUNT** is set to $10 \times 60 \times 1 = 600$.
- **Correlation of failed CRC and bit error rate (BER)** — The CRC check can fail if one or more bits in a packet are corrupted. Therefore, an exact correlation between the CRC fail rate and the BER is not possible. Under certain assumptions an approximation can be made as follows. A direct input and output packet containing 20 bytes results in 160 bits of data being sent and therefore, a transmission of 63 packets is equivalent to 10,000 bits. A BER of 10^{-4} implies 1 bit error for every 10000 bits sent or received. Assuming the best case of only 1 bit error in a failed packet, having 1 failed packet for every 63 received is about equal to a BER of 10^{-4}.

5.3.18.3 Unreturned messages alarm CH1(2)

SETTINGS ⇨ PRODUCT SETUP ⇨⇩ DIRECT I/O ⇨⇩ UNRETURNED MESSAGES ALARM CH1(2)

■ UNRETURNED ■ MESSAGES ALARM CH1	⇔	UNRET MSGS ALARM CH1 FUNCTION: Disabled	Range: Enabled, Disabled
	⇩	UNRET MSGS ALARM CH1 MESSAGE COUNT: 600	Range: 100 to 10000 in steps of 1
	⇩	UNRET MSGS ALARM CH1 THRESHOLD: 10	Range: 1 to 1000 in steps of 1
	⇩	UNRET MSGS ALARM CH1 EVENTS: Disabled	Range: Enabled, Disabled

The N60 checks integrity of the direct input and output communication ring by counting unreturned messages. In the ring configuration, all messages originating at a given device should return within a pre-defined period of time. The unreturned messages alarm function is available for monitoring the integrity of the communication ring by tracking the rate of unreturned messages. This function counts all the outgoing messages and a separate counter adds the messages have failed to return. When the unreturned messages counter reaches the user-definable level specified by the **UNRET MSGS ALARM CH1 THRESHOLD** setting and within the user-defined message count **UNRET MSGS ALARM CH1 COUNT**, the DIR IO CH1 UNRET ALM FlexLogic operand is set.

When the total message counter reaches the user-defined maximum specified by the **UNRET MSGS ALARM CH1 MESSAGE COUNT** setting, both the counters reset and the monitoring process is restarted.

Configure the operand to drive an output contact, user-programmable LED, or selected communication-based output. Latching and acknowledging conditions, if required, are programmed accordingly.

The unreturned messages alarm function is available on a per-channel basis and is active only in the ring configuration. The total number of unreturned input and output messages is available as the **ACTUAL VALUES ⇨ STATUS ⇨⇩ DIRECT INPUTS ⇨⇩ UNRETURNED MSG COUNT CH1** actual value.

5.3.19 Teleprotection

SETTINGS ⇨ PRODUCT SETUP ⇨⇩ TELEPROTECTION

■ TELEPROTECTION ■	⇔	TELEPROTECTION FUNCTION: Disabled	Range: Disabled, Enabled
	⇩	NUMBER OF TERMINALS: 2	Range: 2, 3

⇳	**NUMBER OF COMM CHANNELS: 1**	Range: 1, 2
⇳	**LOCAL RELAY ID NUMBER: 0**	Range: 0 to 63 in steps of 1
⇳	**TERMINAL 1 RELAY ID NUMBER: 0**	Range: 0 to 63 in steps of 1
⇧	**TERMINAL 2 RELAY ID NUMBER: 0**	Range: 0 to 63 in steps of 1

SOFTWARE OPTION

This option is available when an Inter-Relay Communications card is specified at the time of ordering. With the option, direct inputs/outputs display by default. When you enable the teleprotection feature, direct I/O is not visible.

Digital teleprotection transfers protection commands between two or three relays in a secure, fast, dependable, and deterministic way. Possible applications are permissive or blocking pilot schemes and direct transfer trip (DTT). Teleprotection can be applied over any analog or digital channels and any communications media, such as direct fiber, copper wires, optical networks, or microwave radio links. A mixture of communication media is possible.

Once teleprotection is enabled and the teleprotection input/outputs are configured, data packets are transmitted continuously every 1/4 cycle (3/8 cycle if using C37.94 modules) from peer-to-peer. Security of communication channel data is achieved by using CRC-32 on the data packet.

NOTE

Teleprotection inputs/outputs and direct inputs/outputs are mutually exclusive. As such, they cannot be used simultaneously. Once teleprotection inputs and outputs are enabled, direct inputs and outputs are blocked, and vice versa.

NUMBER OF TERMINALS — Specifies whether the teleprotection system operates between two peers or three peers.

NUMBER OF CHANNELS — Specifies how many channels are used. If the **NUMBER OF TERMINALS** is "3" (three-terminal system), set the **NUMBER OF CHANNELS** to "2." For a two-terminal system, the **NUMBER OF CHANNELS** can set to "1" or "2" (redundant channels).

LOCAL RELAY ID NUMBER, **TERMINAL 1 RELAY ID NUMBER**, and **TERMINAL 2 RELAY ID NUMBER** — In installations that use multiplexers or modems, it is desirable to ensure that the data used by the relays protecting a given line is from the correct relays. The teleprotection function performs this check by reading the message ID sent by transmitting relays and comparing it to the programmed ID in the receiving relay. This check is also used to block inputs if inadvertently set to loopback mode or data is being received from a wrong relay by checking the ID on a received channel. If an incorrect ID is found on a channel during normal operation, the TELEPROT CH1 ID FAIL or TELEPROT CH2 ID FAIL FlexLogic operand is set, driving the event with the same name and blocking the teleprotection inputs. For commissioning purposes, the result of channel identification is also shown in the **STATUS ⇨⇩ CHANNEL TESTS ⇨⇩ VALIDITY OF CHANNEL CONFIGURATION** actual value. The default value of "0" for the **LOCAL RELAY ID NUMBER** indicates that relay ID is not to be checked. On two- terminals two-channel systems, the same **LOCAL RELAY ID NUMBER** is transmitted over both channels; as such, only the **TERMINAL 1 ID NUMBER** has to be programmed on the receiving end.

5.3.20 Installation

SETTINGS ⇨ PRODUCT SETUP ⇨⇩ INSTALLATION

■ **INSTALLATION** ■	⇔	**RELAY SETTINGS: Not Programmed**	Range: Not Programmed, Programmed
	⇳	**RELAY NAME: Relay-1**	Range: up to 20 alphanumeric characters
	⇧	**STATION NAME Station-1**	Range: up to 20 alphanumeric characters

RELAY SETTINGS — To safeguard against the installation of a relay without any entered settings, the unit does not allow signaling of any output relay until **RELAY SETTINGS** is set to "Programmed." This setting is "Not Programmed" by default. The UNIT NOT PROGRAMMED self-test error message displays until the relay is put into the "Programmed" state.

RELAY NAME — This setting allows the user to uniquely identify a relay. This name appears on generated reports.

STATION NAME — This setting allows the user to associate the relay with the installed substation.

5.4 Remote resources

5.4.1 Remote resources configuration

When the N60 is ordered with a process card module as a part of HardFiber system, an additional **Remote Resources** menu tree is available in the EnerVista software to allow configuration of the HardFiber system.

Figure 5-70: Remote Resources configuration menu

The remote resources settings configure a N60 with a Process Bus Module to work with HardFiber Bricks. Remote resources configuration is only available through the EnerVista software, and is not available through the N60 front panel. A Brick provides eight AC measurements, along with contact inputs, DC analog inputs, and contact outputs, to be the remote interface to field equipment such as circuit breakers and transformers. The N60 with a Process Bus Module has access to all of the capabilities of up to eight Bricks. Remote resources settings configure the point-to-point connection between specific fiber optic ports on the N60 process card and specific Brick. The relay is then configured to measure specific currents, voltages and contact inputs from those Bricks, and to control specific outputs.

The configuration process for remote resources is straightforward and consists of the following steps.

- Configure the field units. This establishes the point-to-point connection between a specific port on the relay Process Bus Module, and a specific digital core on a specific Brick. This is a necessary first step in configuring a process bus relay.
- Configure the AC banks. This sets the primary and secondary quantities and connections for currents and voltages. AC bank configuration also provides a provision for redundant measurements for currents and voltages, a powerful reliability improvement possible with process bus.
- Configure signal sources. This functionality of the N60 has not changed other than the requirement to use currents and voltages established by AC bank configuration under the remote resources menu.
- Configure field contact inputs, field contact outputs, RTDs, and transducers as required for the application's functionality. These inputs and outputs are the physical interface to circuit breakers, transformers, and other equipment. They replace the traditional contact inputs and outputs located at the relay to virtually eliminate copper wiring.

- Configure shared inputs and outputs as required for the application's functionality. Shared inputs and outputs are distinct binary channels that provide high-speed protection quality signaling between relays through a Brick.

For additional information on how to configure a relay with a Process Bus Module, see the HardFiber Process Bus System Instruction Manual.

5.5 System setup

5.5.1 AC inputs

5.5.1.1 Current banks

SETTINGS ⇨⇩ SYSTEM SETUP ⇨ AC INPUTS ⇨ CURRENT BANK F1(U5)

■ CURRENT BANK F1 ■	⇔	PHASE CT F1 PRIMARY: 1 A	Range: 1 to 65000 A in steps of 1
	⇩	PHASE CT F1 SECONDARY: 1 A	Range: 1 A, 5 A
	⇩	PHASE CT F1 POL: STANDARD	Range: Standard, Inverted-3Ph, Inverted Ph-A, Inverted Ph-B, Inverted Ph-C
	⇩	GROUND CT F1 PRIMARY: 1 A	Range: 1 to 65000 A in steps of 1
	⇩	GROUND CT F1 SECONDARY: 1 A	Range: 1 A, 5 A
	⇧	GROUND CT F1 POL: STANDARD	Range: Standard, Inverted

Because energy parameters are accumulated, record these values and then reset immediately prior to changing CT characteristics.

Six banks of phase and ground CTs can be set, where the current banks are denoted in the following format (X represents the module slot position letter):

Xa, where X = {F, M, U} and a = {1, 5}

See the Introduction to AC Sources section at the beginning of this chapter for details.

These settings are critical for all features that have settings dependent on current measurements. When the relay is ordered, the CT module must be specified to include a standard or sensitive ground input. As the phase CTs are connected in wye (star), the calculated phasor sum of the three phase currents (IA + IB + IC = neutral current = 3I0) is used as the input for the neutral overcurrent elements. In addition, a zero-sequence (core balance) CT which senses current in all of the circuit primary conductors, or a CT in a neutral grounding conductor can also be used. For this configuration, the ground CT primary rating must be entered. To detect low level ground fault currents, the sensitive ground input can be used. In this case, the sensitive ground CT primary rating must be entered. See chapter 3 for more details on CT connections.

Enter the rated CT primary current values. For both 1000:5 and 1000:1 CTs, the entry would be 1000. For correct operation, the CT secondary rating must match the setting (which must also correspond to the specific CT connections used).

The following example illustrates how multiple CT inputs (current banks) are summed as one source current. Given the following current banks:

- F1: CT bank with 500:1 ratio
- F5: CT bank with 1000:1 ratio
- M1: CT bank with 800:1 ratio

The following rule applies:

$$SRC\ 1 = F1 + F5 + M1 \qquad \textbf{Eq. 5-7}$$

1 pu is the highest primary current. In this case, 1000 is entered and the secondary current from the 500:1 and 800:1 ratio CTs are adjusted to that created by a 1000:1 CT before summation. If a protection element is set up to act on SRC 1 currents, then a pickup level of 1 pu operates on 1000 A primary.

The same rule applies for current sums from CTs with different secondary taps (5 A and 1 A).

The N60 allows the reversal of the CT polarity for a single phase or three phases without changing the wiring of the relay CT slots through settings **PHASE CT F1 (Xa) POL** and **GROUND CT F1 (Xa) POL**.

PHASE CT F1 POL — If CTs are wired with the correct polarity in all phases, i.e. CT polarity reversal is not required, "Standard" should be selected. If CT polarity is incorrect in just one phase, then select "Inverted Ph-A (B or C)"; choosing the affected phase. If CT polarities of all three phases are incorrect, select "Inverted-3Ph" to correct the CT polarities for all three phases. It should be noted that the oscillography record will capture the CTs current signal as applied to the relay terminal irrespective of this setting. This ensures correct relay behavior when recorded oscillography is played back to the relay.

GROUND CT F1 POL — If the ground CT is wired with the correct polarity, select "Standard" for this setting. If the Ground CT polarity is incorrect, then select "Inverted" to correct it. It should be noted that the oscillography record will capture ground CT current signal as applied to the relay terminal irrespective of this setting. This ensures the correct relay behavior when recorded oscillography is played back to the relay.

NOTE

It is important that the settings **PHASE CT F1 POL** and **GROUND CT F1 POL** are set to the correct values before putting the relay into operation. Selecting the wrong value or changing this setting whilst relay is in operation would result in undesirable operation of the protection and control functions.

5.5.1.2 Voltage banks

SETTINGS ⇨⇩ SYSTEM SETUP ⇨ AC INPUTS ⇨⇩ VOLTAGE BANK F5(U5)

■ VOLTAGE BANK F5 ■	⇔	PHASE VT F5 CONNECTION: Wye	Range: Wye, Delta
	⇩	PHASE VT F5 SECONDARY: 66.4 V	Range: 25.0 to 240.0 V in steps of 0.1
	⇩	PHASE VT F5 RATIO: 1.00 :1	Range: 1.00 to 24000.00 in steps of 0.01
	⇩	AUXILIARY VT F5 CONNECTION: Vag	Range: Vn, Vag, Vbg, Vcg, Vab, Vbc, Vca
	⇩	AUXILIARY VT F5 SECONDARY: 66.4 V	Range: 25.0 to 240.0 V in steps of 0.1
	⇧	AUXILIARY VT F5 RATIO: 1.00 :1	Range: 1.00 to 24000.00 in steps of 0.01

Because energy parameters are accumulated, these values should be recorded and then reset immediately prior to changing VT characteristics.

Three banks of phase/auxiliary VTs can be set, where voltage banks are denoted in the following format (X represents the module slot position letter):

Xa, where X = {F, M, U} and a = {5}

See the Introduction to AC Sources section at the beginning of this chapter for details.

With VTs installed, the relay can perform voltage measurements as well as power calculations. Enter the **PHASE VT F5 CONNECTION** made to the system as "Wye" or "Delta." An open-delta source VT connection is entered as "Delta."

NOTE

The nominal **PHASE VT F5 SECONDARY** voltage setting is the voltage across the relay input terminals when nominal voltage is applied to the VT primary.

For example, on a system with a 13.8 kV nominal primary voltage and with a 14400:120 volt VT in a delta connection, the secondary voltage is 115; that is, (13800 / 14400) × 120. For a wye connection, the voltage value entered must be the phase to neutral voltage, which is 115 / $\sqrt{3}$ = 66.4.

On a 14.4 kV system with a delta connection and a VT primary to secondary turns ratio of 14400:120, the voltage value entered is 120; that is, 14400 / 120.

5.5.2 Power system

SETTINGS ⇨⇩ SYSTEM SETUP ⇨⇩ POWER SYSTEM

■ POWER SYSTEM ■	⇔	**NOMINAL FREQUENCY:** **60 Hz**	Range: 25 to 60 Hz in steps of 1
	⇩	**PHASE ROTATION:** **ABC**	Range: ABC, ACB
	⇩	**FREQUENCY AND PHASE REFERENCE: SRC 1**	Range: SRC 1, SRC 2, SRC 3, SRC 4, SRC 5, SRC 6
	⇩	**SIGNAL TO TRACK:** **Auto**	Range: Auto, 3-ph VT, 1-ph VT, 3-ph CT, 1-ph CT
	⇩	**ALTERNATE FREQ AND PHS REFERENCE: None**	Range: SRC 1, SRC 2, SRC 3, SRC 4, SRC 5, SRC 6
	⇩	**ALT SIGNAL TO TRACK:** **3-ph VT**	Range: 3-ph VT, 1-ph VT, 3-ph CT, 1-ph CT
	⇧	**FREQUENCY TRACKING:** **Enabled**	Range: Disabled, Enabled

NOMINAL FREQUENCY — The power system **NOMINAL FREQUENCY** value is used as a default to set the digital sampling rate if the system frequency cannot be measured from available signals. This can happen if the signals are not present or are heavily distorted. Before reverting to the nominal frequency, the frequency tracking algorithm holds the last valid frequency measurement for a safe period of time while waiting for the signals to reappear or for the distortions to decay. When using a Process Bus Module and SV streams, the SV streams need to be defaulted before changing this setting, under **Settings > Process Bus Module > SV Stream Config**. After changing the **NOMINAL FREQUENCY**, restart the relay using **Maintenance > Reboot Relay Command**.

PHASE ROTATION — The phase sequence of the power system is required to properly calculate sequence components and power parameters. The **PHASE ROTATION** setting matches the power system phase sequence and informs the relay of the actual system phase sequence, either ABC or ACB. CT and VT inputs on the relay, labeled as A, B, and C, must be connected to system phases A, B, and C for correct operation.

FREQUENCY AND PHASE REFERENCE — This setting determines which signal source is used for frequency tracking and phase angle reference. Within this source, a specific signal shall be selected for tracking frequency calculation and for the phase angle reference, and such selection will be determined by **SIGNAL TO TRACK** setting below.

SIGNAL TO TRACK — This setting specifies the signal in a source to be used for tracking frequency calculation and for phase angle reference.

When Auto is selected, the AC signal to be used in a source is prioritized based on the AC inputs configuration in this source, in which phase voltages takes precedence, followed by the auxiliary voltage, then phase currents, and finally ground current, as it was in legacy UR f/w releases. With the Auto setting, the signal selection is static rather than dynamic, i.e. AC signals are selected based upon the source configuration only, regardless of whether a particular signal is applied to the relay or not. If VT or CT is selected (3-ph VT, 1-ph VT, 3-ph CT, 1-ph CT), the AC signal to be used is directly based on this selection and will revert to nominal frequency if selected signal is below 0.06pu.

For the three-phase selection, phase A is used for angle referencing (ANGLE REF = VA or IA), while Clarke transformation of the phase signals is used for frequency metering and tracking (VFREQUENCY = (2VA - VB - VC) / 3) for better performance during fault, open pole, and VT and CT fail conditions.

Phase angle of the reference signal always displays zero degrees and all other phase angles are relative to this signal. If the pre-selected reference signal is not measurable at a given time, the phase angles are not referenced to any external AC signal and are referenced to the internal reference to continue maintaining proper phase relationship between all other measured AC signal.

The phase angle referencing is done via a phase locked loop, which can synchronize independent UR-series relays if they have the same AC signal reference. This results in very precise correlation of phase angle indications between different UR-series relays.

ALTERNATE FREQ AND PHS REFERE — This setting determines the alternative source for frequency tracking and phase angle reference. If the signal specified by the main FREQUENCY AND PHASE REFERENCE setting is lost, the reference will be switched to this alternative reference.

The switching between the main reference and the alternative reference shall be allowed (activated) only if the following conditions are true,

1. Frequency tracking is enabled, **AND**
2. The alternative reference is set to a source other than None, **AND**
3. The selected signals between main and alternative **FREQUENCY AND PHASE REFERENCE** are different.

Note that even the same source is selected in the main and in the alternative **FREQUENCY AND PHASE REFERENCE**, but different signals are selected in the main and the alternative **SIGNAL TO TRACK**, the switching is also allowed (activated). When main source signal becomes available again, relay will switch back to the main source.

5

ALT SIGNAL TO TRACK — Same as the **SIGNAL TO TRACK** setting in the main **FREQUENCY AND PHASE REFERENCE**, but the signal defined here is used for the **ALTERNATE FREQ AND PHS REFERENCE**. When the same source is selected in both main **REFERENCE** and alternate **REFERENCE**, the signal selected in this setting must be different from the signal selected in the main **REFERENCE**, otherwise no switching is performed.

If neither main nor alternate signals are available, tracking frequency is reverting to nominal until either main or alternate signals are available and measurable.

FREQUENCY TRACKING — Set it to "Disabled" only in unusual circumstances; consult GE Grid Solutions for special variable-frequency applications.

NOTE

The frequency tracking feature functions only when the N60 is in the "Programmed" mode. If the N60 is "Not Programmed," then metering values are available but can exhibit significant errors.

5.5.3 Signal sources

SETTINGS ⇨⇩ SYSTEM SETUP ⇨⇩ SIGNAL SOURCES ⇨ SOURCE 1(6)

■ **SOURCE 1** ■	⇔	**SOURCE 1 NAME:** **SRC 1**	Range: up to 20 alphanumeric characters
	⇩	**SOURCE 1 PHASE CT:** **None**	Range: None, F1,... up to any 6 CTs. Only Phase CT inputs are displayed.
	⇩	**SOURCE 1 GROUND CT:** **None**	Range: None, F1,... up to any 6 CTs. Only Ground CT inputs are displayed.
	⇩	**SOURCE 1 PHASE VT:** **None**	Range: None, F5, M5, U5 Only phase voltage inputs are displayed
	⇩	**SOURCE 1 AUX VT:** **None**	Range: None, F5, M5, U5 Only auxiliary voltage inputs are displayed

⇕	**SRC 1 ALT PHASE CT:** **None**	Range: None, F1,... up to any 6 CTs
⇕	**SRC 1 ALT GROUND CT:** **None**	Range: None, F1,... up to any 6 CTs
⇕	**SWITCH TO ALT CT:** **Off**	Range: FlexLogic operand
⇕	**SRC 1 ALT PHASE VT:** **None**	Range: None, F5, M5, U5
⇕	**SRC 1 ALT AUX VT:** **None**	Range: None, F5, M5, U5
⇧	**SRC 1 SWITCH ALT VT:** **Off**	Range: FlexLogic operand

Identical menus are available for each source. The "SRC 1" text can be replaced by with a user-defined name appropriate for the associated source.

The first letter in the source identifier represents the module slot position. The number directly following this letter represents either the first bank of four channels (1, 2, 3, 4) called “1” or the second bank of four channels (5, 6, 7, 8) called “5” in a particular CT/VT module. See the Introduction to AC Sources section at the beginning of this chapter for details.

It is possible to select the sum of all CT combinations. The first channel displayed is the CT to which all others are referred. For example, the selection “F1+F5” indicates the sum of each phase from channels “F1” and “F5,” scaled to whichever CT has the higher ratio. Selecting “None” hides the associated actual values.

The approach used to configure the AC sources consists of several steps; first step is to specify the information about each CT and VT input. For CT inputs, this is the nominal primary and secondary current. For VTs, this is the connection type, ratio and nominal secondary voltage. Once the inputs have been specified, the configuration for each source is entered, including specifying which CTs are summed together.

5.5.3.1 User selection of AC parameters for comparator elements

CT/VT modules automatically calculate all current and voltage parameters from the available inputs. Users must select the specific input parameters to be measured by every element in the relevant settings menu. The internal design of the element specifies which type of parameter to use and provides a setting for source selection. In elements where the parameter can be either fundamental or RMS magnitude, such as phase time overcurrent, two settings are provided. One setting specifies the source, the second setting selects between fundamental phasor and RMS.

5.5.3.2 AC input actual values

The calculated parameters associated with the configured voltage and current inputs are displayed in the current and voltage sections of actual values. Only the phasor quantities associated with the actual AC physical input channels display here. All parameters contained within a configured source are displayed in the sources section of the actual values.

5.5.3.3 Disturbance detectors (internal)

The disturbance detector (ANSI 50DD) element is a sensitive current disturbance detector that detects any disturbance on the protected system. The 50DD function is used directly in some elements in the relay, for example VT Fuse Failure detector or Fault Report. It can also be used to supervise current-based elements to prevent maloperation as a result of the wrong settings or external CT wiring problem. A disturbance detector is provided for each source.

The 50DD function responds to the changes in magnitude of the sequence currents. The disturbance detector logic is as follows.

Figure 5-71: Disturbance detector logic (example using six sources)

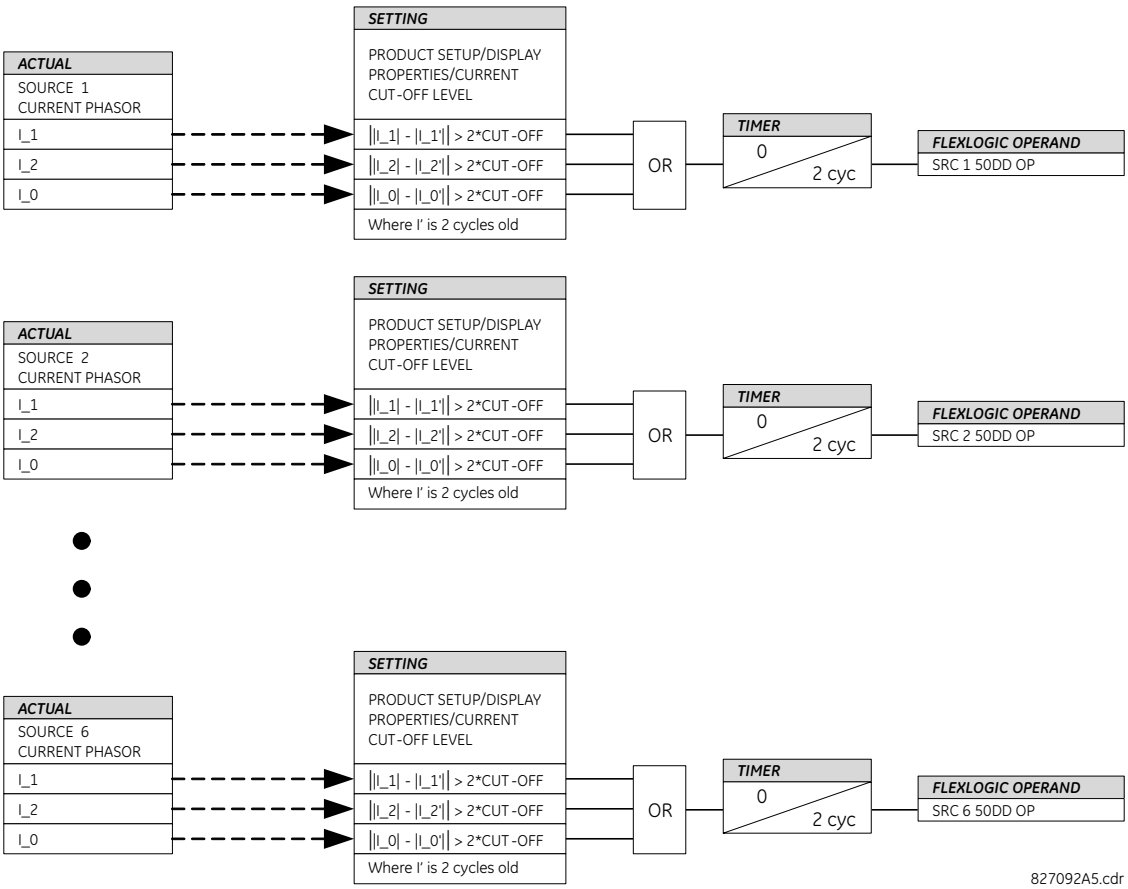

The disturbance detector responds to the change in currents of twice the current cut-off level. The default cut-off threshold is 0.02 pu; thus by default the disturbance detector responds to a change of 0.04 pu. The metering sensitivity setting (**PRODUCT SETUP ⇨⇩ DISPLAY PROPERTIES ⇨⇩ CURRENT CUT-OFF LEVEL**) controls the sensitivity of the disturbance detector accordingly.

5.5.3.4 Example for use of sources

An example of the use of sources is shown in the following figure. A relay can have the following hardware configuration:

	Increasing slot position letter -->		
UR	**CT/VT module 1**	**CT/VT module 2**	**CT/VT module 3**
B30, B90, C70, F35, N60, T35	8 CTs	4 CTs, 4 VTs	4 CTs, 4 VTs
C60, C95, D60, G30, G60, L30, L90, M60, T60	CTs	VTs	not applicable

This configuration can be used on a two-winding transformer, with one winding connected into a breaker-and-a-half system. The following figure shows the arrangement of sources used to provide the functions required in this application, and the CT/VT inputs that are used to provide the data.

Figure 5-72: Example of use of sources

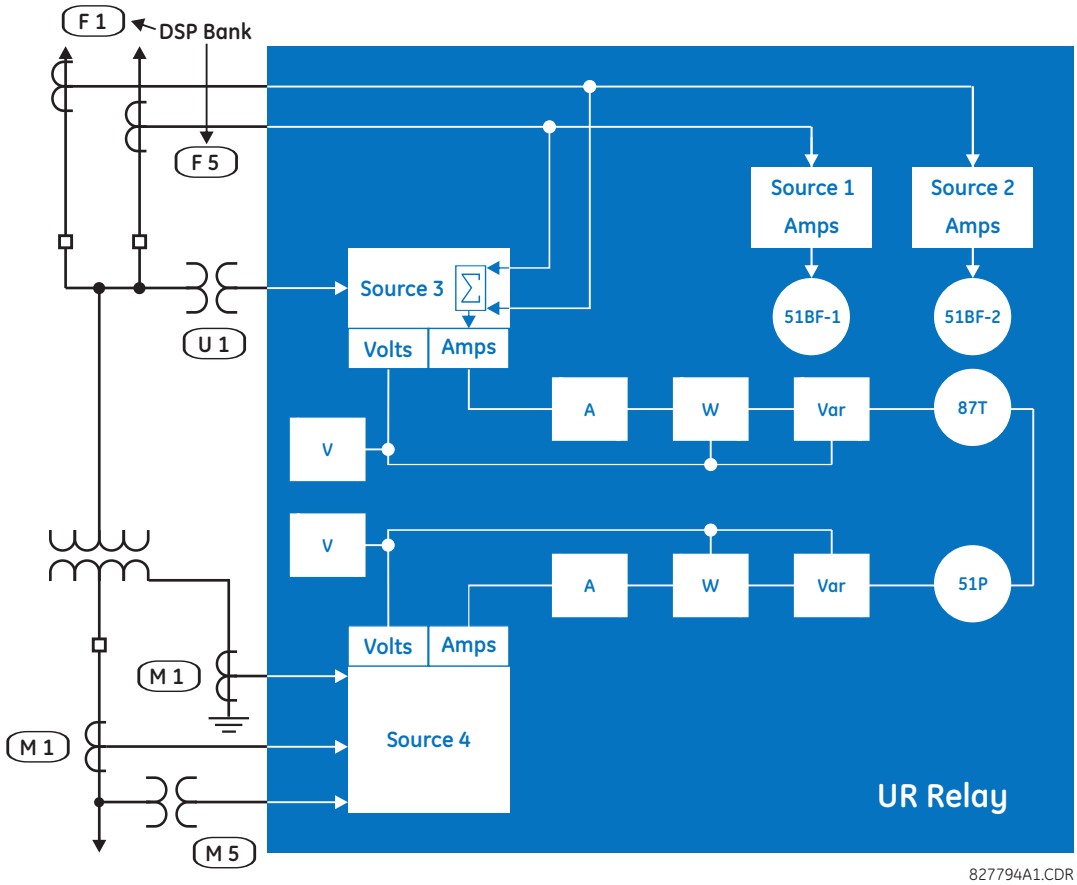

	Y LV	D HV	AUX
	SRC 1	SRC 2	SRC 3
Phase CT	M1	F1+F5	None
Ground CT	M1	None	None
Phase VT	M5	None	None
Aux VT	None	None	U1

5.5.3.5 Source switching

The N60 supports providing current and voltage signals input from both main and alternate CTs and VTs with a user-defined switching between them. This is beneficial in applications, where the N60 can provide protection when main CT or VT are not available due to station re-configuration. Some application examples are shown as follows.

Figure 5-73: Examples of VTs (a) and CTs (b) switching from the main to alternate

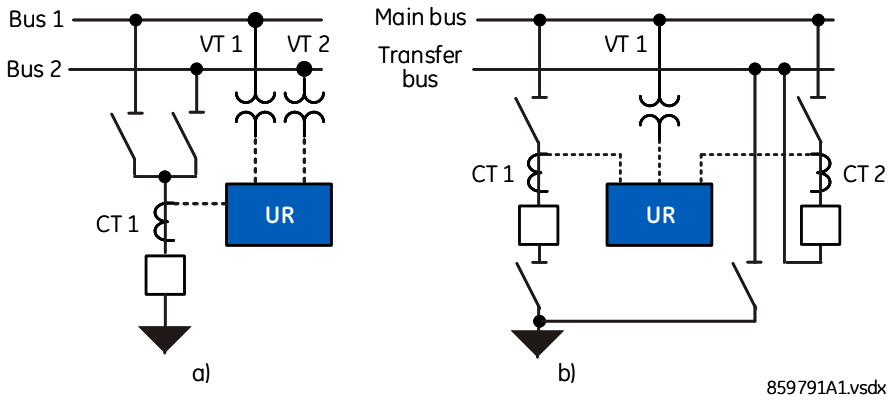

This figure depicts examples of VT switching from VT1 to VT2 when Bus 1 is de-energized, and the line is energized via Bus 2. CT switching example (b) depicts connecting bus transfer breaker CT to the line relay when main line breaker is taken for maintenance and the line is energized via transfer bus, in this case the UR senses current from either CT 1 when line is energized via main line breaker or via CT 2 when the line is energized via transfer bus breaker.

Figure 5-74: Logic diagram of switching CTs and VTs from the main to alternate banks

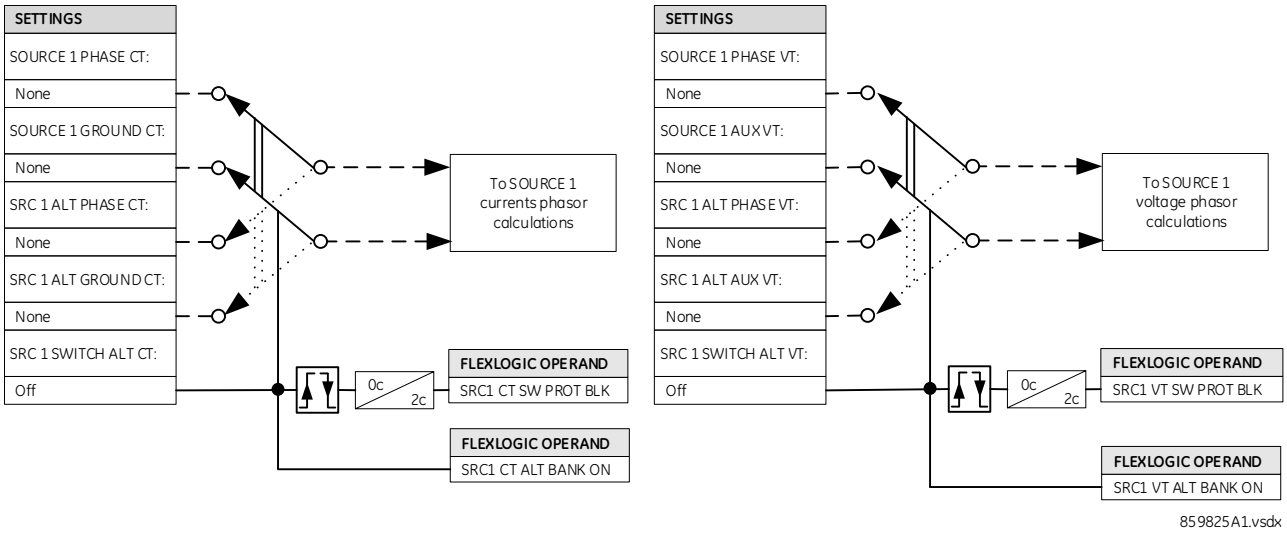

When a FlexLogic operand assigned to **SRC 1 SWITCH ALT CT/VT** is logical "0," the analog data is processed from the main CT and VT analog data banks. When this operand is logical "1," the analog data is processed from the alternate CT and VT analog data banks.

Note that

- Banks assigned to the same function for the main and alternate input data have to have the same CTs and VTs nominals and connections, otherwise a warning is generated and switching functionality is prohibited. For example, banks assigned to the PHASE CT and ALT PHASE CT have to have same primary and secondary CT values. Ground CT input has to be same type (cannot be one regular and another sensitive ground CT input).
- During switching from the main CT/VT input data to alternate input data and vice versa, all relay functions are blocked for two power cycles and metering data does not update
- CT bank switching is allowed if both main and alternate CT banks have the exact same combination for CTs summation
- When it is required that switching state from the main to alternate be memorized in case of N60 restart or when the switching signal is a pulse by nature, such as a pushbutton or IEC 61850 GOOSE, use Non-volatile Latches

- Since switching occurs in both the Phase and Ground CT (Phase and Aux VT), it is possible to keep the same set, for example phase bank under both the main source and alternate source, but different set for ground/aux signal

5.5.4 Breakers

SETTINGS ⇨⇩ SYSTEM SETUP ⇨⇩ BREAKERS ⇨ COMMON SETTINGS

■ COMMON SETTINGS ■	⇔	BKR INTERM & BAD ST TIMERS: Common	Range: Common, Distinct

SETTINGS ⇨⇩ SYSTEM SETUP ⇨⇩ BREAKERS ⇨ BREAKER 1(6)

■ BREAKER 1 ■	⇔	BREAKER 1 FUNCTION: Disabled	Range: Disabled, Enabled
	⇩	BREAKER 1 NAME: Bkr 1	Range: up to six alphanumeric characters
	⇩	BREAKER 1 MODE: 3-Pole	Range: 3-Pole, 1-Pole
	⇩	BREAKER1 ΦA/3P OPND: Off	Range: FlexLogic operand
	⇩	BREAKER1 ΦA/3P CLSD: Off	Range: FlexLogic operand
	⇩	BREAKER 1 ΦB OPENED: Off	Range: FlexLogic operand
	⇩	BREAKER 1 ΦB CLOSED: Off	Range: FlexLogic operand
	⇩	BREAKER 1 ΦC OPENED: Off	Range: FlexLogic operand
	⇩	BREAKER 1 ΦC CLOSED: Off	Range: FlexLogic operand
	⇩	BREAKER 1 ALARM PDisc DELAY: 0.000 s	Range: 0.000 to 65.535 s in steps of 0.001
	⇩	BREAKER 1 EXT ALARM: Off	Range: FlexLogic operand
	⇩	BREAKER 1 RACKED-IN: Off	Range: FlexLogic operand
	⇩	BREAKER 1 OUT OF SV: Off	Range: FlexLogic operand
	⇩	BREAKER 1 OPEN CMD: Off	Range: FlexLogic operand
	⇩	BRK1 COMMS OPEN CMD: Off	Range: FlexLogic operand
	⇩	BREAKER 1 CLOSE CMD: Off	Range: FlexLogic operand
	⇩	BRK1 COMMS CLS CMD: Off	Range: FlexLogic operand
	⇩	BREAKER1 PB CONTROL: Off	Range: FlexLogic operand
	⇩	BREAKER1 TOPERATE: 70 ms	Range: 0 to 65535 ms in steps of 1

⇕	**BREAKER 1 BAD ST TSUPPRESS: 0 ms**	Range: 0 to 65535 ms in steps of 1
⇕	**MANUAL CLOSE RECAL1 TIME: 0.000 s**	Range: 0.000 to 65.535 s in steps of 0.001
⇕	**BREAKER 1 OPEN SEAL-IN: 0.000 s**	Range: 0.000 to 65.535 s in steps of 0.001
⇕	**BREAKER 1 BLK OPEN: Off**	Range: FlexLogic operand
⇕	**BREAKER 1 BLK CLOSE: Off**	Range: FlexLogic operand
⇕	**BRK1 BLK BYPASS: Disabled**	Range: Disabled, Enabled
⇕	**BREAKER 1 TAGGING: Disabled**	Range: Disabled, Enabled
⇕	**BREAKER 1 SUBSTITUTN: Disabled**	Range: Disabled, Enabled
⇕	**BREAKER 1 EVENTS: Disabled**	Range: Disabled, Enabled
⇕	**BRK1 CILO INTRLK TO LOCAL CTRL: Disabled**	Range: Disabled, Enabled
⇕	**BRK1 CILO INTERLOCK GFP BYPASS: Disabled**	Range: Disabled, Enabled
⇕	**BREAKER 1 LOCAL: Off**	Range: FlexLogic operand
⇕	**BRK1 BLK ML CMD IN LOCAL: Disabled**	Range: Disabled, Enabled
⇕	**BRK1 CSWI LOC STAT: Off**	Range: FlexLogic operand
⇕	**BRK1 STATION AUTHOR: Off**	Range: FlexLogic operand
⇕	**BREAKER 1 OPEN INTERLOCK: Off**	Range: FlexLogic operand
⇕	**BREAKER 1 CLOSE INTERLOCK: Off**	Range: FlexLogic operand
⇕	**BREAKER 1 SYNCCHECK CLOSE: Off**	Range: FlexLogic operand
⇧	**BREAKER 1 POS-REACHED CHECK: Enabled**	Range: Enabled, Disabled

The breaker control element contains the auxiliary logic for status and serves as the interface for opening and closing of a circuit breaker from protection, autoreclose, SCADA, or through the front panel interface. The breaker control element can be used to create interlocking functionality. For greater security in determination of the breaker position, both the 52/a and 52/b auxiliary contacts are used with reporting of the discrepancy between them.

To use this element, configure the contact outputs that trip and close the breaker to use FlexLogic operands BREAKER 1 OFF CMD (or BREAKER 1 TRIP A/B/C in the case of single-pole tripping) and BREAKER 1 ON CMD, and configure the breaker control element inputs as described here.

A description of the operation of the breaker control and status monitoring features from the front panel is provided in chapter 4.

BKR INTERM & BAD ST TIMERS — When set to "Common", the breaker element considers both **"**00**"** and **"**11**"** states of 52a and 52b as an intermediate state and when the Toperate timer expires, declares the breaker as bad status. When set to "Distinct", the breaker element considers "00" state of 52a and 52b as an intermediate state and "11" as bad status. When the breaker status detected is 00, the breaker element waits for the Toperate timer to expire before declaring the intermediate state. When the breaker status detected is 11, the breaker element waits for the Bad ST Tsuppress timer to expire before declaring the bad state. See breaker logic diagrams 2 and 4.

The following settings are available for each breaker control element.

BREAKER 1 FUNCTION — This setting enables and disables the operation of the breaker 1 control feature.

BREAKER 1 NAME — Assign a user-defined name (up to six characters) to the breaker. This name is used in flash messages related to breaker 1.

BREAKER 1 MODE — Selects "3-Pole" mode, where all breaker poles are operated simultaneously, or selects "1-Pole" mode where all breaker poles are operated either independently or simultaneously.

BREAKER1 ΦA/3P OPND — Selects an operand, usually a contact input, that is for a normally-closed 52/b status input that creates a logic 1 when the breaker is open. If a separate 52/b contact input is not available, then the inverted 52/a status signal or the inverted **BREAKER 1 CLOSED** status signal can be used.

BREAKER1 ΦA/3P CLSD — Selects an operand, usually a contact input connected to a breaker auxiliary position tracking mechanism. This input is for a normally-open 52/a status input that creates a logic 1 when the breaker is closed. If the **BREAKER 1 MODE** setting is selected as **"**3-Pole**"** this setting selects a single 52/a input as the operand used to track the breaker open or closed position. If the mode is selected as "1-Pole" the input mentioned is used to track phase A and the **BREAKER 1 ΦB** and **BREAKER 1 ΦC** settings select operands to track phases B and C, respectively.

BREAKER1 ΦB OPENED — If the mode is selected as three-pole, this setting has no function. If the mode is selected as single-pole, this input is used to track the breaker phase B opened position as outlined for phase A.

BREAKER1 ΦB CLOSED — If the mode is selected as three-pole, this setting has no function. If the mode is selected as single-pole, this input is used to track the breaker phase B closed position as outlined for phase A.

BREAKER1 ΦC OPENED — If the mode is selected as three-pole, this setting has no function. If the mode is selected as single-pole, this input is used to track the breaker phase C opened position as outlined for phase A.

BREAKER1 ΦC CLOSED — If the mode is selected as three-pole, this setting has no function. If the mode is selected as single-pole, this input is used to track the breaker phase C closed position as outlined for phase A.

BREAKER 1 ALARM PDisc DELAY — This setting specifies the delay interval during which a disagreement of status among the pole position tracking operands does not declare a pole discrepancy. This allows for non-simultaneous operation of the poles.

If single-pole tripping and reclosing is used, the breaker can trip unsymmetrically for faults. In this case, the minimum alarm delay setting must exceed the maximum time required for fault clearing and reclosing by a suitable margin.

BREAKER 1 EXT ALARM — This setting selects an operand, usually an external contact input connected to a breaker alarm reporting contact. While the selected operand is active, the BREAKER 1 TROUBLE operand is activated.

BREAKER 1 RACKED-IN — This setting selects a contact input to show whether the breaker is racked-in or racked-out. The racked-in or racked-out status is used to indicate dynamically the status of breaker symbol, only applied in the single-line diagram on the graphical front panel. If this setting is set to Off, the racked status is not considered.

BREAKER 1 OUT OF SV — Selects an operand indicating that breaker 1 is out-of-service.

BREAKER 1 OPEN CMD — Selects an operand that initiates Breaker 1 open/trip command. Open command is not executed when blocked by the operand assigned to **BREAKER 1 BLK OPEN** setting.

BRK1 COMMS OPEN CMD — Selects an operand that initiates Breaker 1 open command. The setting is intended for commands received via communication protocols (DNP3, IEC104 and Modbus) to be supervised by IED Local/Remote status. The open command is not executed if IED is in the local mode or blocked by the operand assigned to **BREAKER 1 BLK OPEN** setting.

BREAKER 1 CLOSE CMD — Selects an operand that initiates Breaker 1 close command. Close command is not executed when blocked by operand assigned to **BREAKER 1 BLK CLOSE** setting.

BKR 1 COMMS CLS CMD — Selects an operand that initiates Breaker 1 close command. The setting is intended for commands received via communication protocols (DNP3, IEC104 and Modbus) to be supervised by IED Local/Remote status. The close command is not executed if the IED is in local mode or blocked by the operand assigned to **BREAKER 1 BLK CLOSE** setting.

BREAKER 1 PB CONTROL — Local breaker control operations (that is, open/close) are allowed from front panel pushbuttons when the selected operand value is high.

BREAKER 1 TOPERATE — This setting specifies the required interval to overcome transient disagreement between the 52/a and 52/b auxiliary contacts during breaker operation. If transient disagreement still exists after this time has expired, the BREAKER 1 BAD STATUS FlexLogic operand is asserted for alarm or blocking purposes.

BREAKER 1 BAD ST TSUPPRESS — When the **BKR INTERM & BAD ST TIMERS** setting is set to **"**Distinct**"** this setting specifies the required interval to overcome the transient state of 11 during the breaker operation. If the 11 state still exists after this time, the BREAKER 1 BAD STATUS FlexLogic operand is asserted. When the **BKR INTERM & BAD ST TIMERS** setting is set to "Common" this setting is not used.

MANUAL CLOSE RECAL1 TIME — This setting specifies the seal-in time of the close commands due to an operator-initiated manual close command to the circuit breaker.

BREAKER 1 OPEN SEAL-IN — This setting specifies the seal-in time of the three-pole open command initiated by either the Trip Out element or a manual open command to the circuit breaker.

BREAKER 1 BLK OPEN — Selects an operand that prevents initiation of Breaker 1 open and individual phase trip commands. This setting can be used for blocking circuit breaker tripping for instance when breaker monitoring detects conditions such as low SF_6 gas density during which breaker opening can cause damage.

BREAKER 1 BLK CLOSE — Selects an operand that prevents initiation of Breaker 1 close commands. This setting can be used for blocking circuit breaker closing, for instance to prevent closing into a closed ground switch.

5

BRK1 BLK BYPASS — Set to "Enable" to allow the graphical front panel to bypass breaker 1 blocking. When asserted, **BREAKER 1 BLK OPEN** and **BREAKER 1 BLK CLOSE** settings are bypassed. This setting is only available if the order code includes GFP.

BREAKER 1 TAGGING — Breaker tagging is used to block certain operation when it is tagged for safety purposes. No other action is needed after enabling the function; it is handled internally where certain functions are blocked.

Set to "Enable No Override" to allow the graphical front panel or IEC 61850 MMS control to tag breaker 1. When tagged from the graphical front panel, tagging can be removed only from the graphical front panel, and an attempt to remove tagging using IEC 61850 MMS control results in a negative response (-Rsp). When tagged from IEC 61850 MMS control, tagging can be removed only by MMS control.

Set to "Enable With Override" to allow the graphical front panel or IEC 61850 MMS control to tag breaker 1. When tagged from the graphical front panel, tagging can be removed only from the graphical front panel, and an attempt to remove tagging using IEC 61850 MMS control results in a negative response (-Rsp). When tagged from IEC 61850 MMS control, tagging can be removed by MMS control or from the graphical front panel. That is, the graphical front panel has an override function.

When tagged, the following operations are disabled: pushbutton open/close, IEC 61850 open/close, and close command initiated by **BREAKER 1 CLOSE** setting. The trip command issued by the Trip Out element or **BREAKER 1 OPEN** setting is not affected. This setting is only available if the order code includes GFP.

BREAKER1 SUBSTITUTN — Set to "Enable" to allow the graphical front panel/IEC 61850 to substitute breaker 1 status. When substituted, breaker 1 control open/close status is forced to the substituted value. This setting is only available if the order code includes GFP.

BRK1 CILO INTRLK TO LOCAL CTRL — Set to "Enable" to allow CILO interlock to apply to front panel and FlexLogic operand controls. This setting is available only if the order code includes IEC 61850.

BRK1 CILO INTERLOCK GFP BYPASS — Set to **"**Enable**"** to allow the graphical front panel to bypass the CILO interlock for front panel and FlexLogic operand controls. This setting is available only if the order code includes IEC 61850 and GFP.

BREAKER 1 LOCAL — Set in the EnerVista software or via SCL file. It selects an operand that indicates the Breaker in the switch yard is in Local or Remote mode. When the operand value is set, it indicates that the Breaker is in Local mode. For the IEC 61850 order code option, refer to the below Control Authority table for control behavior.

BRK1 BLK MNL CMD IN LOCAL — When set to **"**Enabled**"** and the **BREAKER 1 LOCAL** operand state is logic "1" (i.e. the Breaker is in Local mode and Bkr0XCBR1.Loc is TRUE), manual commands originating from the front panel pushbuttons, graphical front panel and **BREAKER 1 OPEN/CLOSE CMD** are blocked. When set to "Disabled", manual commands originating from relay are allowed even when the Breaker is in Local mode (**BREAKER 1 LOCAL** operand state is logic "1"). Please refer to the Control Authority table below for control behavior. This setting is available only if the order code includes IEC 61850.

BKR1 CSWI LOC STAT — Selects an operand that indicates the breaker residing in that bay is in Local or Remote mode. When the operand state is logic "1", the bay is considered in Local mode and when the operand state is "0", the bay is considered in Remote mode. The operand status is modeled in the IEC 61850 server using the respective breaker's CSWI Loc data object and the user should refer to the operand status in the Control Authority table below to determine the control authority for different levels. This setting is available only if the order code includes IEC 61850.

BKR1 STATION AUTHOR — Selects an operand that indicates the Station level authority status. The operand status is modeled in the IEC 61850 server using the respective breaker's CSWI LocSta data object the user should refer to the operand status in the Control Authority table below to determine the control authority for different levels. This setting is available only if the order code includes IEC 61850.

BREAKER 1 OPEN INTERLOCK — Selects an operand that indicates the interlock status for the Breaker Open commands. This operand state is mapped directly to the IEC 61850 BkrCILO1.EnaOpn.stVal, which is used to reject the IEC 61850 open command when the selected operand state is at logic "0" (BkrCILO1.EnaOpn.stVal is set to false). However, the IEC 61850 client can select to check or skip the interlock condition to execute the command using the "Check" parameter in control command.
Additionally, the interlock condition can be applied to the local commands as well, which can originate from the front local HMI, front panel push buttons, graphical front panel (GFP) and FlexLogic Operands assigned to **BREAKER 1 OPEN CMD** setting. This is achieved by selecting setting **BRK1 CILO INTRLK TO LOCAL CTRL** as "Enabled". This setting is available only if the order code includes IEC 61850.

BREAKER 1 CLOSE INTERLOCK — Selects an operand that indicates the interlock status for the Breaker Open commands. This operand state is mapped directly to the IEC 61850 BkrCILO1.EnaCls.stVal, which is used to reject the IEC 61850 close command when the selected operand state is at logic "0" (BkrCILO1.EnaCls.stVal is set to false). However, the IEC 61850 client can select to check or skip the interlock condition to execute the command using the "Check" parameter in control command.
Additionally, the interlock condition can be applied to the local commands as well, which can originate from the front local HMI, front panel push buttons, graphical front panel (GFP) and FlexLogic Operands assigned to **BREAKER 1 CLOSE CMD** setting. This is achieved by selecting setting **BRK1 CILO INTRLK TO LOCAL CTRL** as "Enabled". This setting is available only if the order code includes IEC 61850.

BREAKER 1 SYNCCHECK CLOSE - Selects an operand that indicates the status of the synchrocheck function of the Breaker. When the operand value is set, the remote commands from IEC 61850 client are rejected if the IEC 61850 client set the synchrocheck bit in the "Check" parameter of the control command. This setting is only available if the order code includes IEC 61850.

BREAKER 1 POS-REACHED CHECK — When **"**Enabled**"**, the IEC 61850 control value is checked for current Breaker status and is rejected if the command value (Open/Close) from IEC 61850 client match with the present Breaker status. When **"**Disabled**"**, the current Breaker status is not verified to accept the control. This setting is only available if the order code includes IEC 61850.

NOTE

Before software release version 7.90, **ST.LOC OPERAND**, **INTERLOCK OPN**, **INTERLOCK CLS** and **SYNCCHECK CLOSE** settings were available in IEC 61850 configurator under **System Setup > Breaker**. From version 7.90 onwards, the above mentioned settings were removed from the IEC 61850 configurator and merged with the Breaker settings screen under **Settings > System Setup > Breakers** (outside the IEC 61850 configurator). Also, the name of the setting **ST.LOC OPERAND** has been changed to **LOCAL**.

BREAKER 1 LOCAL, **INTERLOCK OPEN**, **INTERLOCK CLOSE**, **SYNCCHECK CLOSE** settings are not available on the front panel and can be configured either from EnerVista Software or via SCL files. Refer to the MICS document online for respective settings modeling in SCL files. **BREAKER 1 POS-REACHED CHECK** is only configurable via EnerVista software.

Control authority

Within the substation, control commands to the primary equipment, such as the breaker or disconnect switch, can be originated from one of three levels - Bay, Station or Remote. Station level commands are those originating from either the substation gateway or from the station HMI and Remote commands are from the remote Network Control Center (NCC). Bay level commands, however, are commands originating from bay devices such as bay controllers (e.g. C264) or IEDs (protection relays), either using 61850 control services or using non-61850 control methods (front panel pushbuttons, graphical front panel or commands initiated through FlexOperands).

Under certain operational conditions, such as during maintenance, it is necessary to block commands from one or more of these levels. The local/remote control feature (described in IEC61850 7-4: Annex B) allows users to enable or disable control authority from one or more of the three levels, as illustrated in the below table. IEC61850 commands originating from the various levels are differentiated using the Origin.OrCat attribute value in the 61850 command. The IEC61850 7-4 Local/ Remote table is extended with Bay level non-61850 commands and those commands are only allowed when the Bay level has the control authority.

Table 5-15: Control Authority

		Switch	Bay Control				Command from			
							Bay		Station	NCC
			Mode of switching authority for local control	Local Control Behavior	Control Authority At Station Level	Manual Control at Switch (process)		orCat		
	BKR1 BLK MNL CMD IN LOCAL	XCBR.LocX SWI.Loc	LLN0.MltLev	CSWI.Loc	CSWI.LocSta		Non 61850 Bay Control	Local Ctl (Bay)	Station	Remote
	Enabled	T	F	n.a.	n.a.	AA	NA	NA	NA	NA
	Disabled	T	F	n.a.	n.a.	AA	AA	NA	NA	NA
	n.a.	F	F	T	n.a.	AA	AA	AA	NA	NA
	n.a.	F	F	F	T	AA	NA	NA	AA	NA
	n.a.	F	F	F	F	AA	NA	NA	NA	AA
	Enabled	T	T	n.a.	n.a.	AA	NA	NA	NA	NA
	Disabled	T	T	n.a.	n.a.	AA	AA	NA	NA	NA
	n.a.	F	T	T	n.a.	AA	AA	AA	NA	NA
	n.a.	F	T	F	T	AA	AA	AA	AA	NA
Default	n.a.	F	T	F	F	AA	AA	AA	AA	AA

n.a. - not applicable
AA - Always Allowed
NA - Not Allowed
Non-61850 Bay Control - Any manual control from the relay, i.e. from the front panel, the relay push buttons or a FlexOperand initiated command.
Manual Control at Switch (process) - Control external to the IED, e.g. the breaker may be controlled directly from the control panel.
Cells highlighted in gray are not defined in the standard and reflect UR's commitment to maintaining backwards compatibility.

Figure 5-75: Dual breaker control logic (Sheet 1 of 4)

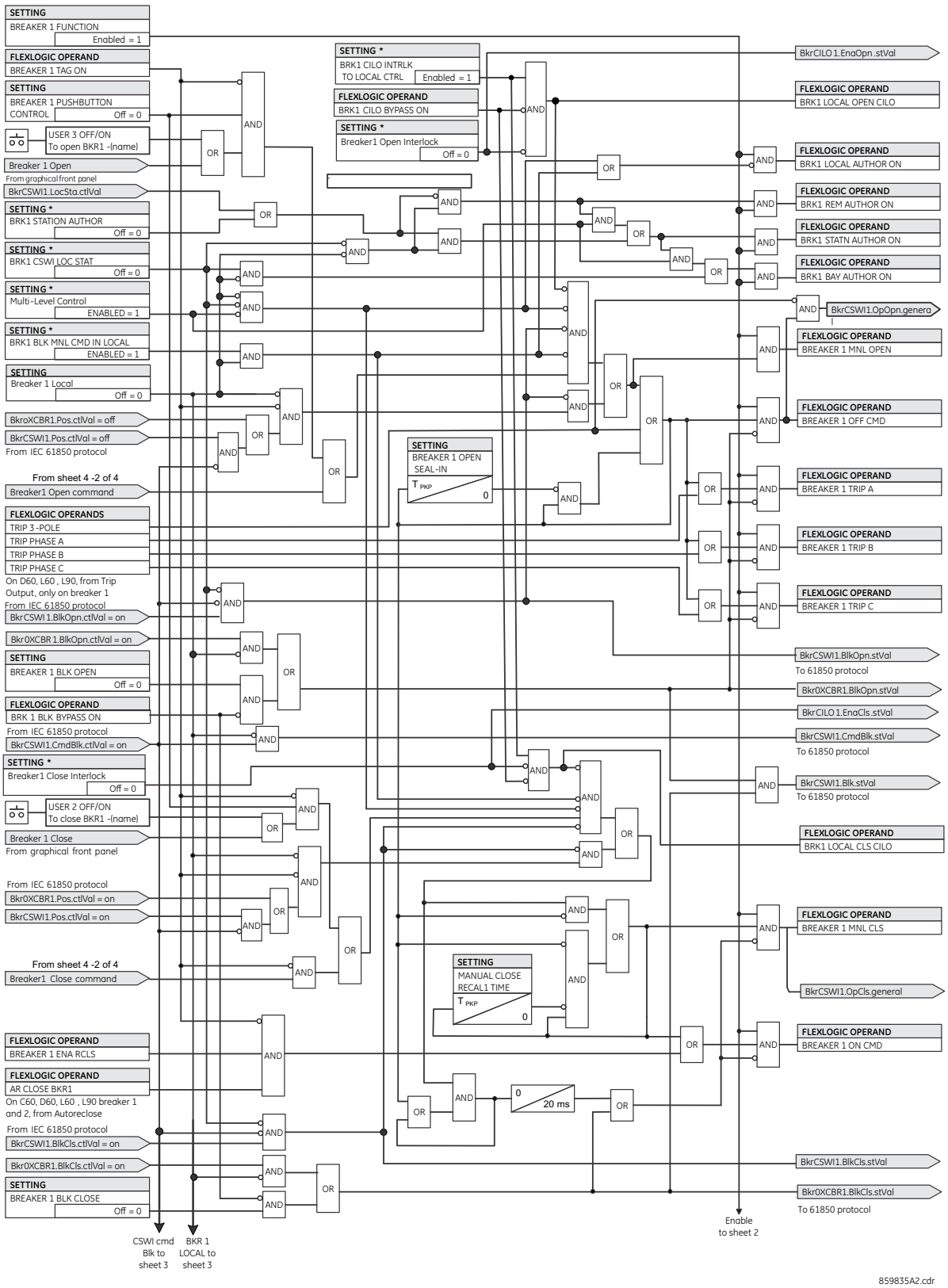

5

Figure 5-76: Dual breaker control logic (Sheet 2 of 4)

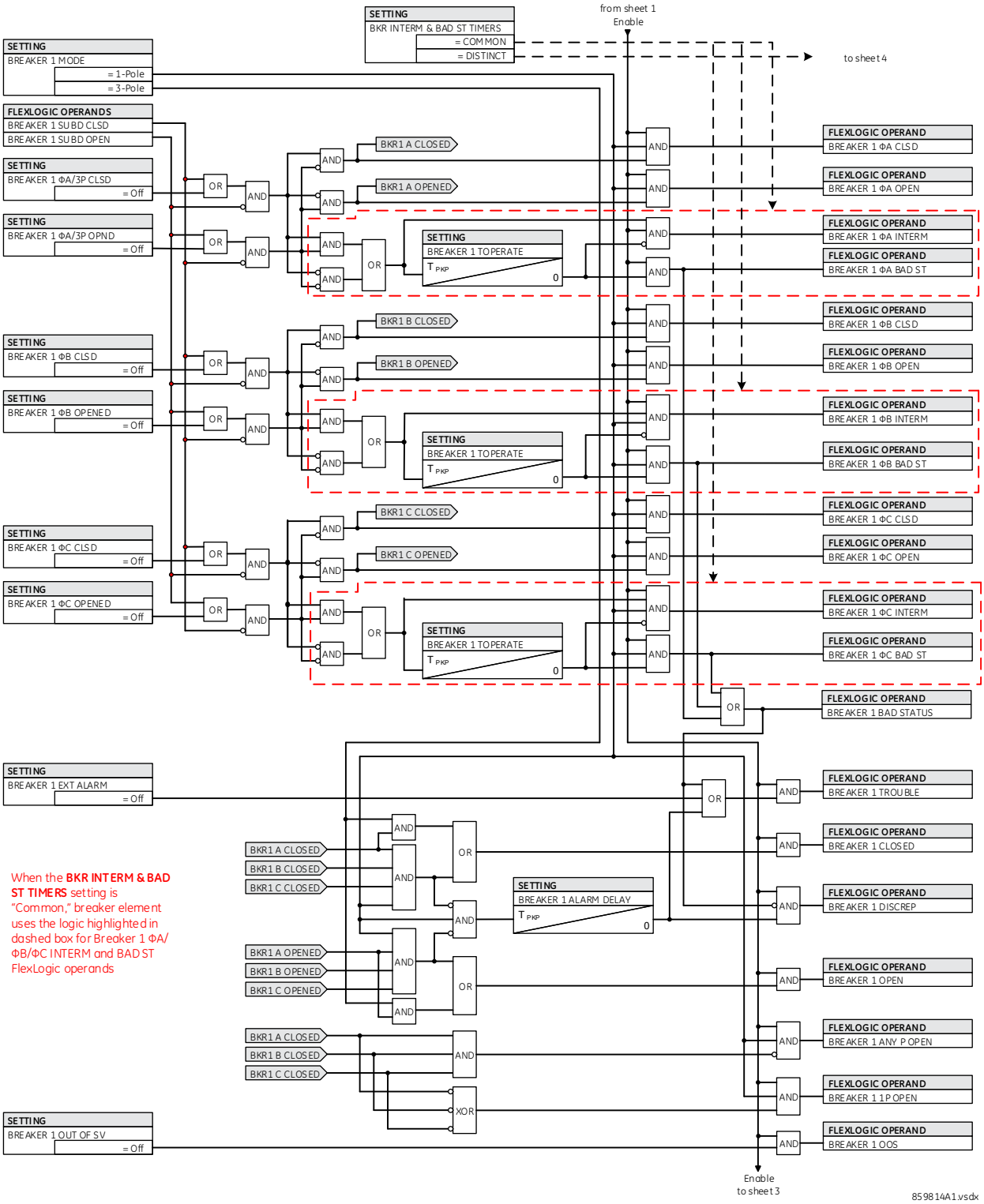

When the **BKR INTERM & BAD ST TIMERS** setting is "Common," breaker element uses the logic highlighted in dashed box for Breaker 1 ΦA/ΦB/ΦC INTERM and BAD ST FlexLogic operands

Figure 5-77: Dual breaker / graphical front panel control logic (Sheet 3 of 4)

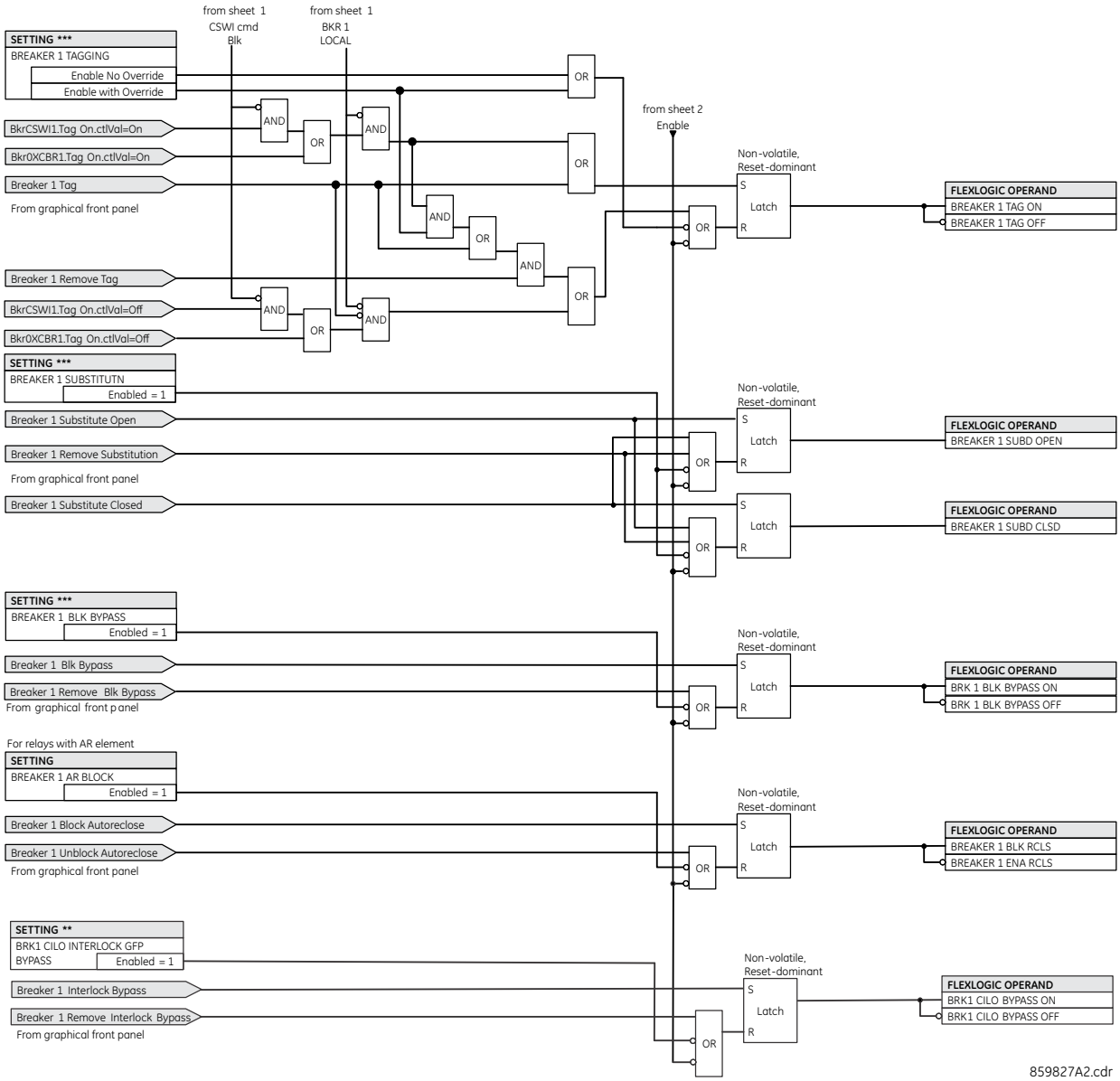

Settings marked "**" are only available in order codes that include IEC 61850 and GFP.
Settings marked "***" are only available in order codes that include GFP.

The breaker element has direct hard-coded connections to the IEC 61850 model as shown in the logic diagram. This allows remote open/close operation of each breaker, using either CSWI or XCBR IEC 61850 logical nodes. IEC 61850 select-before-operate functionality, local/remote switch functionality, along with blocking of open/close commands are provided. Note that the dwell time for the IEC 61850 trip and close commands shown is one protection pass only. To maintain the close/open command for a certain time, do so by setting the seal-in timers **BREAKER 1 OPEN SEAL-IN** and **MANUAL CLOSE RECAL1 TIME**, on the contact outputs using the "Seal-in" setting, in the Trip Output element, and/or in FlexLogic.

Figure 5-78: Dual breaker control logic (Sheet 4 of 4)

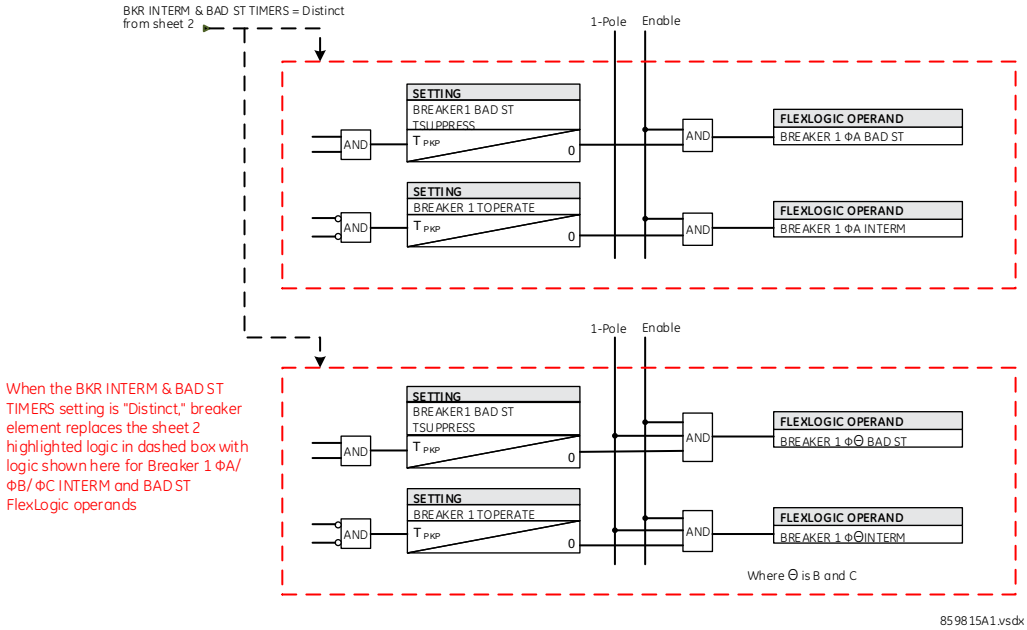

5

5.5.5 Disconnect switch control

SETTINGS ⇨⇩ SYSTEM SETUP ⇨⇩ SWITCHES ⇨⇩ COMMON SETTINGS

■ COMMON SETTINGS ■	⇔	SW INTERM & BAD ST TIMERS: Common	Range: Common, Distinct

SETTINGS ⇨⇩ SYSTEM SETUP ⇨⇩ SWITCHES ⇨⇩ SWITCH 1(24)

■ SWITCH 1 ■	⇔	SWITCH 1 FUNCTION: Disabled	Range: Disabled, Enabled
	⇩	SWITCH 1 NAME: SW 1	Range: up to six alphanumeric characters
	⇩	SWITCH 1 MODE: 3-Pole	Range: 3-Pole, 1-Pole
	⇩	SWTCH 1 ΦA/3P OPND: Off	Range: FlexLogic operand
	⇩	SWTCH 1 ΦA/3P CLSD: Off	Range: FlexLogic operand
	⇩	SWITCH 1 ΦB OPENED: Off	Range: FlexLogic operand
	⇩	SWITCH 1 ΦB CLOSED: Off	Range: FlexLogic operand
	⇩	SWITCH 1 ΦC OPENED: Off	Range: FlexLogic operand
	⇩	SWITCH 1 ΦC CLOSED: Off	Range: FlexLogic operand
	⇩	SWITCH 1 ALARM PDisc DELAY: 0.000 s	Range: 0.000 to 65.535 s in steps of 0.001

⇕	**SWITCH 1 OPEN CMD:** **Off**	Range: FlexLogic operand
⇕	**SW1 COMMS OPEN CMD:** **Off**	Range: FlexLogic operand
⇕	**SWITCH 1 CLOSE CMD:** **Off**	Range: FlexLogic operand
⇕	**SW1 COMMS CLS CMD:** **Off**	Range: FlexLogic operand
⇕	**SWITCH 1 PB CONTROL:** **Off**	Range: FlexLogic operand
⇕	**SWITCH 1 TOPERATE:** **70 ms**	Range: 0 to 65535 ms in steps of 1
⇕	**SWITCH 1 BAD ST TSUPPRESS:** **0 ms**	Range: 0 to 65535 ms in steps of 1
⇕	**SWITCH 1 OPEN SEAL-IN:** **0.000 s**	Range: 0.000 to 65.535 s in steps of 0.001
⇕	**SWITCH 1 CLOSE SEAL-IN:** **0.000 s**	Range: 0.000 to 65.535 s in steps of 0.001
⇕	**SWITCH 1 BLK OPEN:** **Off**	Range: FlexLogic operand
⇕	**SWITCH 1 BLK CLOSE:** **Off**	Range: FlexLogic operand
⇕	**SWITCH 1 BLK BYPASS:** **Disabled**	Range: Disabled, Enabled
⇕	**SWITCH 1 TAGGING:** **Disabled**	Range: Disabled, Enable No Override, Enable with Override
⇕	**SWITCH 1 SUBSTITUTN:** **Disabled**	Range: Disabled, Enabled
⇕	**SWITCH 1 EVENTS:** **Disabled**	Range: Disabled, Enabled
⇕	**SW1 CILO INTRLK TO LOCAL CTRL: Disabled**	Range: Disabled, Enabled
⇕	**SW1 CILO INTERLOCK GFP BYPASS: Disabled**	Range: Disabled, Enabled
⇕	**SWITCH 1 LOCAL:** **Off**	Range: FlexLogic operand
⇕	**SW1 BLK MNL CMD IN LOCAL:** **Disabled**	Range: Disabled, Enabled
⇕	**SW1 CSWI LOC STAT:** **Off**	Range: FlexLogic operand
⇕	**SW1 STATION AUTHOR:** **Off**	Range: FlexLogic operand
⇕	**SWITCH 1 OPEN INTERLOCK:** **Off**	Range: FlexLogic operand
⇕	**SWITCH 1 CLOSE INTERLOCK:** **Off**	Range: FlexLogic operand
⇧	**SWITCH 1 POS-REACHED CHECK:** **Enabled**	Range: Enabled, Disabled

The disconnect switch control element contains the auxiliary logic for status and serves as the interface for opening and closing of disconnect switches from SCADA or through the front panel interface. The disconnect switch control element can be used to create interlocking functionality. For greater security in determination of the switch pole position, both the 89/a and 89/b auxiliary contacts are used with reporting of the discrepancy between them. The number of available disconnect switches is four per breaker. The disconnect switch control element is executed and status updated every ½ power cycle.

To use this element, configure the contact outputs that open and close the disconnect switch to use FlexLogic operands SWITCH 1 OFF CMD and SWITCH 1 ON CMD, and configure the disconnect switch control element's inputs as outlined here.

SW INTERM & BAD ST TIMERS — When set to "Common" the switch element considers both "00" and **"**11**"** states of 89/a and 89/b as intermediate state and when the Toperate timer expires, declares the switch as bad status. When set to "Distinct" the switch element considers "00" state of 89/a and 89/b as intermediate state and "11" as bad status. When the switch status detected is 00, the switch element waits for Toperate timer to expire before declaring the intermediate state. When the switch status detected is 11, the switch element waits for Bad ST Tsuppress timer to expire before declaring the bad state. See the switch logic diagrams 2 and 4.

SWITCH 1 FUNCTION — This setting enables and disables operation of the disconnect switch element.

SWITCH 1 NAME — Assign a user-defined name (up to six characters) to the disconnect switch. This name is used in flash messages related to disconnect switch 1.

SWITCH 1 MODE — This setting selects "3-Pole" mode, where disconnect switch poles have a single common auxiliary switch, or "1-Pole" mode where each disconnect switch pole has its own auxiliary switch.

SWTCH 1 ΦA/3P OPND — This setting selects an operand, usually a contact input, that is for a normally-closed 89/b status input that creates a logic 1 when the disconnect switch is open. If a separate 89/b contact input is not available, then an inverted 89/a status signal can be used.

5

SWTCH 1 ΦA/3P CLSD — This setting selects an operand, usually a contact input connected to a disconnect switch auxiliary position tracking mechanism. This input is for a normally-open 89/a status input that creates a logic 1 when the disconnect switch is closed. If the **SWITCH 1 MODE** setting is selected as "3-Pole," this setting selects a single 89/a input as the operand used to track the disconnect switch open or closed position. If the mode is selected as "1-Pole," the input mentioned is used to track phase A and the **SWITCH 1 ΦB** and **SWITCH 1 ΦC** settings select operands to track phases B and C, respectively.

SWITCH 1 ΦB OPENED — If the mode is selected as three-pole, this setting has no function. If the mode is selected as single-pole, this input is used to track the disconnect switch phase B opened position as outlined for phase A.

SWITCH 1 ΦB CLOSED — If the mode is selected as three-pole, this setting has no function. If the mode is selected as single-pole, this input is used to track the disconnect switch phase B closed position as outlined for phase A.

SWITCH 1 ΦC OPENED — If the mode is selected as three-pole, this setting has no function. If the mode is selected as single-pole, this input is used to track the disconnect switch phase C opened position as outlined for phase A.

SWITCH 1 ΦC CLOSED — If the mode is selected as three-pole, this setting has no function. If the mode is selected as single-pole, this input is used to track the disconnect switch phase C closed position as outlined for phase A.

SWITCH 1 ALARM PDisc DELAY — This setting specifies the delay interval during which a disagreement of status among the pole position tracking operands do not declare a pole discrepancy. This allows for non-simultaneous operation of the poles.

SWITCH 1 OPEN CMD — Selects an operand that initiates Switch 1 open command. Open command is not executed when blocked by the operand assigned to **SWITCH 1 BLK OPEN** setting.

SW1 COMMS OPEN CMD — Selects an operand that initiates Switch 1 open command. The setting is intended for commands received via communication protocols (DNP3, IEC104 and Modbus) to be supervised by IED Local/Remote status. The open command is not executed if the IED is in local mode or blocked by the operand assigned to **SWITCH 1 BLK OPEN** setting.

SWITCH 1 CLOSE CMD — Selects an operand that initiates Switch 1 close command. Close command is not executed when blocked by operand assigned to **SWITCH 1 BLK CLOSE** setting.

SW1 COMMS CLS CMD — Selects an operand that initiates Switch 1 close command. The setting is intended for commands received via communication protocols (DNP3, IEC104 and Modbus) to be supervised by IED Local/Remote status. The close command is not executed if the IED is in local mode or blocked by the operand assigned to **SWITCH 1 BLK CLOSE** setting.

SWITCH 1 PB CONTROL — Local disconnect switch control operations (for example, open/close) are allowed from front panel pushbuttons when the selected FlexLogic operand value is high.

SWITCH 1 TOPERATE — This setting specifies the required interval to overcome transient disagreement between the 89/a and 89/b auxiliary contacts during disconnect switch operation. If transient disagreement still exists after this time has expired, the SWITCH 1 BAD STATUS FlexLogic operand is asserted for alarm or blocking purposes.

SWITCH 1 BAD ST TSUPPRESS — When the **SW INTERM & BAD ST TIMERS** setting is set to **"**Distinct**"** this setting specifies the required interval to overcome the transient state of 11 during the switch operation. If the 11 state still exists after this time, the SWITCH 1 BAD STATUS FlexLogic operand is asserted. When the **SW INTERM & BAD ST TIMERS** setting is set to "Common" this setting is not used.

SWITCH 1 OPEN SEAL-IN — This setting specifies the seal-in time of the open command due to an operator-initiated manual open command to the disconnect switch.

SWITCH 1 CLOSE SEAL-IN — This setting specifies the seal-in time of the close command due to an operator-initiated manual close command to the disconnect switch.

SWITCH 1 BLK OPEN — This setting selects an operand that prevents initiation of the disconnect Switch 1 command. This setting can be used to block the disconnect switch from opening, for instance when switch yard monitoring indicates that current exceeding the switch's interrupting rating can be flowing through the switch.

SWITCH 1 BLK CLOSE — This setting selects an operand that prevents initiation of disconnect Switch 1 close commands. This setting can be used to block the disconnect switch from closing, for instance to prevent closing into a closed ground switch.

SWITCH 1 BLK BYPASS —Set to "Enable" to allow the graphical front panel to bypass switch 1 interlocking. When asserted, **SWITCH 1 BLK OPEN** and **SWITCH 1 BLK CLOSE** settings are bypassed. This setting is available only if the order code includes GFP.

SWITCH 1 TAGGING — Switch tagging is used to block certain operation when it is tagged for safety purposes. No other action is needed after enabling the function; it is handled internally where certain functions are blocked.

Set to "Enable No Override" to allow the graphical front panel or IEC 61850 MMS control to tag switch 1. When tagged from the graphical front panel, tagging can be removed only from the graphical front panel, and an attempt to remove tagging using IEC 61850 MMS control results in a negative response (-Rsp). When tagged using IEC 61850 MMS control, tagging can be removed only by MMS control.

Set to "Enable With Override" to allow the graphical front panel or IEC 61850 MMS control to tag switch 1. When tagged from the graphical front panel, tagging can be removed only from the graphical front panel, and an attempt to remove tagging using IEC 61850 MMS control results in a negative response (-Rsp). When tagged from IEC 61850 MMS control, tagging can be removed by MMS control or from the graphical front panel. That is, the graphical front panel has an override function.

When tagged, the following operations are disabled:

- Pushbutton open/close
- IEC 61850 open/close
- Open command initiated by **SWITCH 1 OPEN** setting
- Close command initiated by **SWITCH 1 CLOSE** setting

This setting is available only if the order code includes GFP.

SWITCH 1 SUBSTITUTN — Set to "Enable" to allow the graphical front panel to substitute switch 1 status. When substituted, switch 1 control open/close status is forced to the substituted value. This setting is available only if the order code includes GFP.

SWITCH 1 LOCAL — Set in the EnerVista software or via SCL file. It selects an operand that indicates the Switch control behavior from an IEC 61850 client. When the operand value is set, it indicates the Switch in Local mode and the remote commands from IEC 61850 client are blocked.

SW1 BLK MNL CMD IN LOCAL — When set to "Enabled" and the **SWITCH 1 LOCAL** operand state is logic "1" (i.e. the Switch is in Local mode and Disc0XSWI1.Loc is TRUE), manual commands originating from the front panel pushbuttons, graphical front panel and **SWITCH 1 OPEN/CLOSE CMD** are blocked. When set to "Disabled", manual commands originating from relay are

allowed even when the Switch is in Local mode (**SWITCH 1 LOCAL** operand state is logic "1"). Please refer to the table in the Control Authority section above for further information on control behavior. This setting is available only if the order code includes IEC 61850.

SW1 CSWI LOC STAT — Selects an operand, that indicates the switch residing in that bay is in Local or Remote mode. When the operand state is logic "1", the bay is considered in Local mode and when the operand state is "0", the bay is considered in remote mode. The operand status is modeled in IEC 61850 server using respective Switch CSWI Loc data object and the user should refer to the operand status in the table in the Control Authority section above to determine the control authority for different levels. This setting is available only if the order code includes IEC 61850.

SW1 STATION AUTHOR — Selects an operand, that indicates the Station level authority status. The operand status is modeled in IEC 61850 server using respective breaker's CSWI LocSta data object and the user should refer to the operand status in the table in the Control Authority section above to determine the control authority for different levels. This setting is available only if the order code includes IEC 61850.

SWITCH 1 OPEN INTERLOCK — Selects an operand that indicates the interlock status for the Switch Open commands. This operand state is mapped directly to the IEC 61850 DiscCILO1.EnaOpn.stVal, which is used to reject the IEC 61850 open command when the selected operand state is at logic "0" (DiscCILO1.EnaOpn.stVal is set to false). However, the IEC 61850 client can select to check or skip the interlock condition to execute the command using the "Check" parameter in control command.
Additionally, the interlock condition can be applied to the local commands as well, which can originate from the front local HMI, front panel push buttons, graphical front panel (GFP) and FlexLogic Operands assigned to **SWITCH 1 OPEN CMD** setting. This is achieved by selecting setting **SW1 CILO INTRLK TO LOCAL CTRL** as "Enabled". This setting is available only if the order code includes IEC 61850.

SWITCH 1 INTERLOCK CLOSE — Selects an operand that indicates the interlock status for the Switch Close commands. This operand state is mapped directly to the IEC 61850 DiscCILO1.EnaCls.stVal, which is used to reject the IEC 61850 close command when the selected operand state is at logic "0" (DiscCILO1.EnaCls.stVal is set to false). However, the IEC 61850 client can select to check or skip the interlock condition to execute the command using the "Check" parameter in control command.
Additionally, the interlock condition can be applied to the local commands as well, which can originate from the front local HMI, front panel push buttons, graphical front panel (GFP) and FlexLogic Operands assigned to **SWITCH 1 CLOSE CMD** setting. This is achieved by selecting setting **SW1 CILO INTRLK TO LOCAL CTRL** as "Enabled". This setting is available only if the order code includes IEC 61850.

SWITCH 1 POS-REACHED CHECK — Set in the EnerVista software. When "Enabled", the IEC 61850 control value is checked for current Switch status and is rejected if the command value (Open/Close) from IEC 61850 client match with the present Switch status. When "Disabled", the current Switch status is not verified to accept the control. This setting is only available if the order code includes IEC 61850.

NOTE

Before software release version 7.90, **ST.LOC OPERAND**, **INTERLOCK OPN** and **INTERLOCK CLS** settings were available in IEC 61850 configurator under **System Setup > Switches**. From version 7.90 onwards, the above mentioned settings were removed from the IEC 61850 configurator and merged with the Breaker settings screen under **Settings > System Setup > Switches** (outside the IEC 61850 configurator). Also, the name of the setting **ST.LOC OPERAND** has been changed to **LOCAL**.

SWITCH 1 LOCAL, **INTERLOCK OPEN**, **INTERLOCK CLOSE** and **SYNCCHECK CLOSE** settings are not available on the front panel and can be configured either from EnerVista Software or via SCL files. Refer to the MICS document online for respective settings modeling in SCL files. **SWITCH 1 POS-REACHED CHECK** is only configurable via EnerVista software

The switch element has direct hard-coded connections to the IEC 61850 model as shown in the logic diagrams. This allows remote open/close operation of each switch, using either CSWI or XSWI IEC 61850 logical nodes. IEC 61850 select-before-operate functionality, local/remote switch functionality, along with blocking open/close commands are provided. Note that the dwell time for the IEC 61850 trip and close commands shown is one protection pass only. To maintain close/open command for a certain time, do so using the seal-in timers **SWITCH 1 OPEN SEAL-IN** and **SWITCH 1 CLOSE SEAL-IN**, on the contact outputs using the setting, or in FlexLogic.

Figure 5-79: Disconnect switch control logic (sheet 1 of 4)

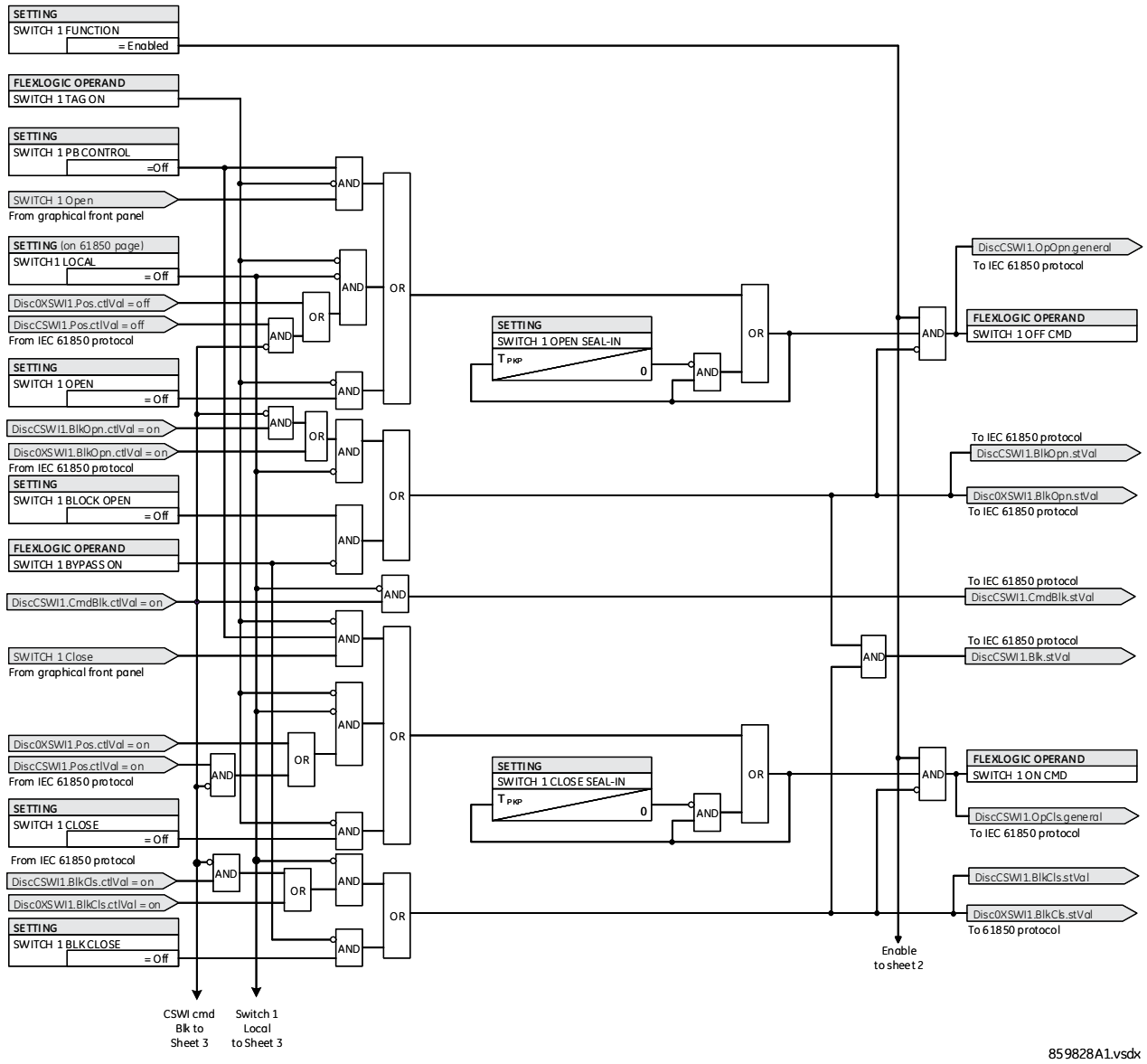

Figure 5-80: Disconnect switch control status logic (sheet 2 of 4)

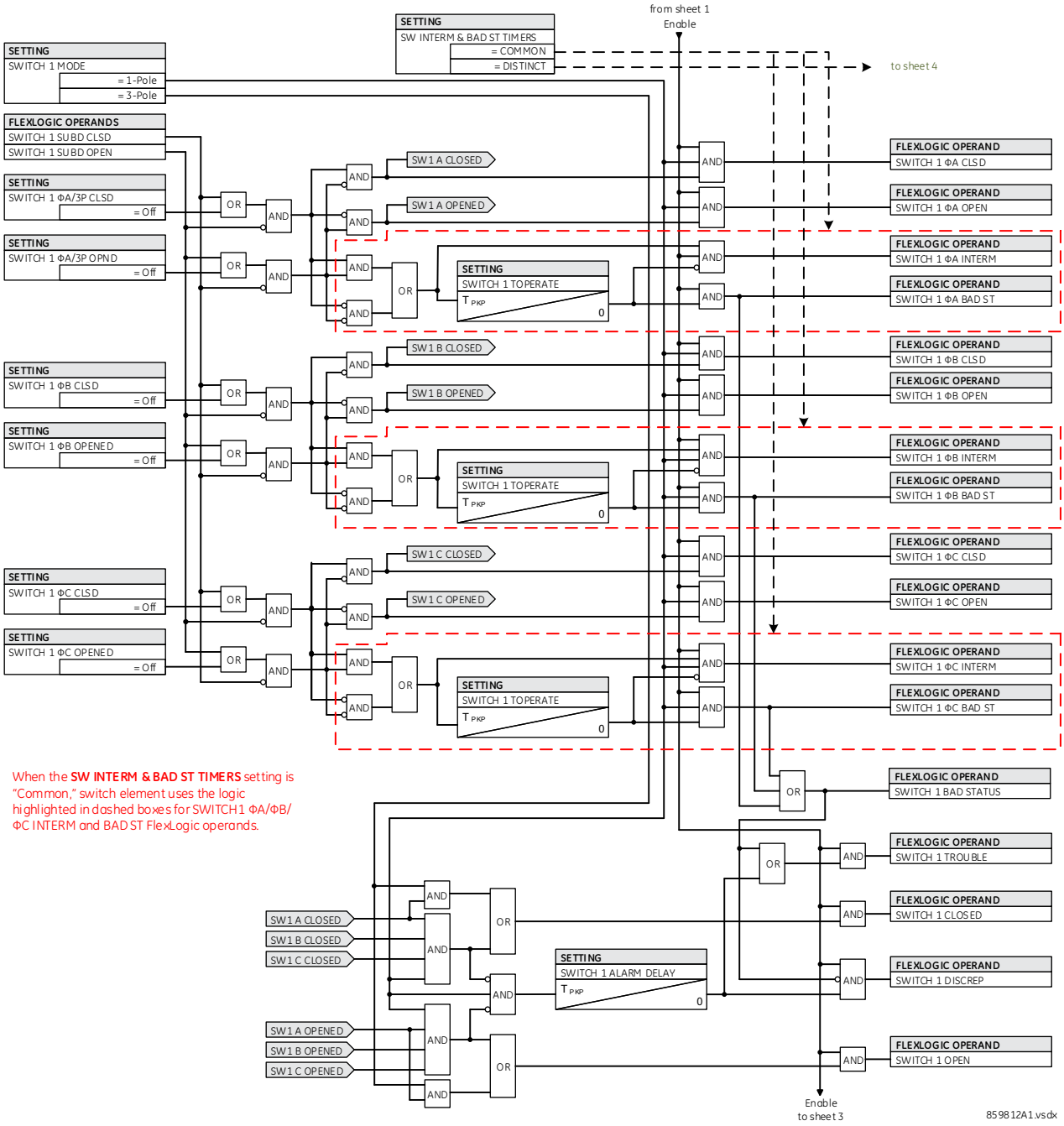

When the **SW INTERM & BAD ST TIMERS** setting is "Common," switch element uses the logic highlighted in dashed boxes for SWITCH1 ΦA/ΦB/ΦC INTERM and BAD ST FlexLogic operands.

Figure 5-81: Disconnect switch control graphical front panel logic (sheet 3 of 4)

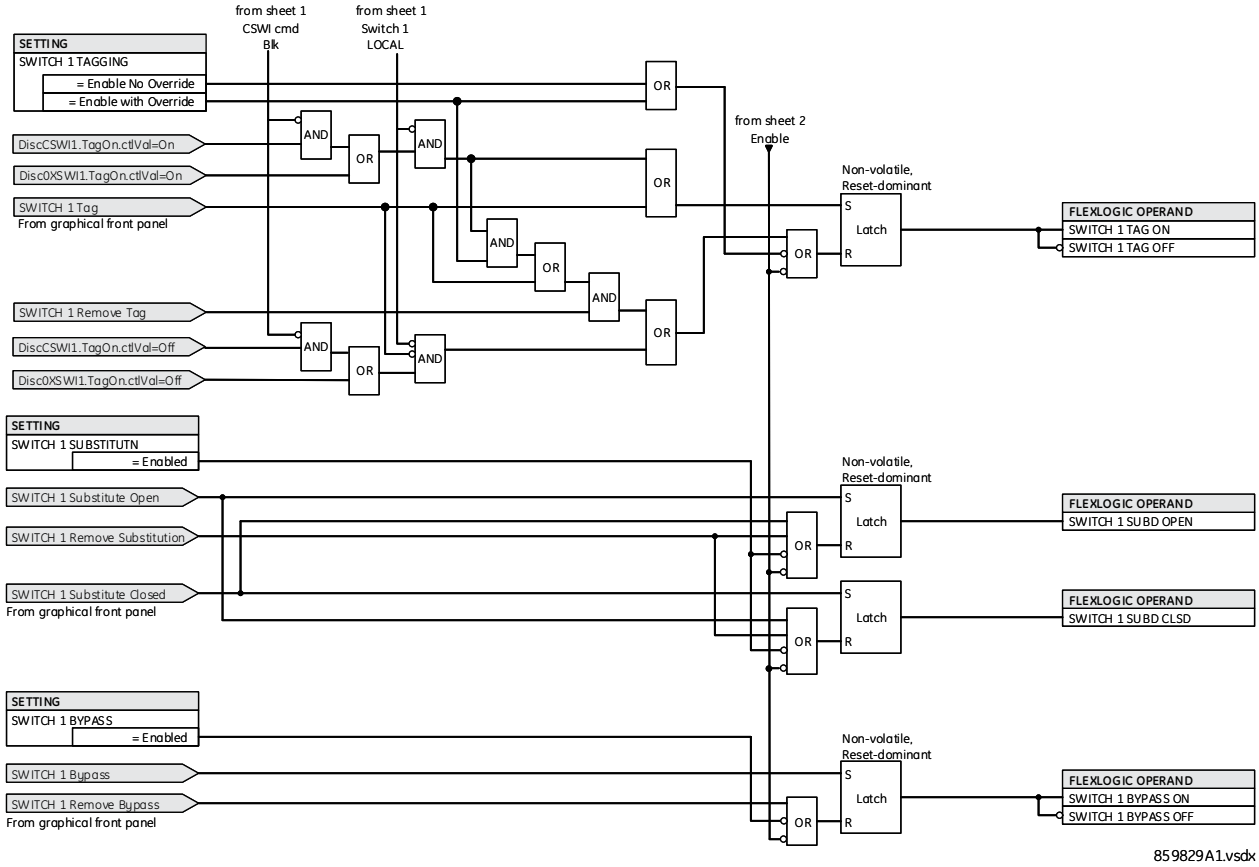

Figure 5-82: Disconnect switch control status logic (sheet 4 of 4)

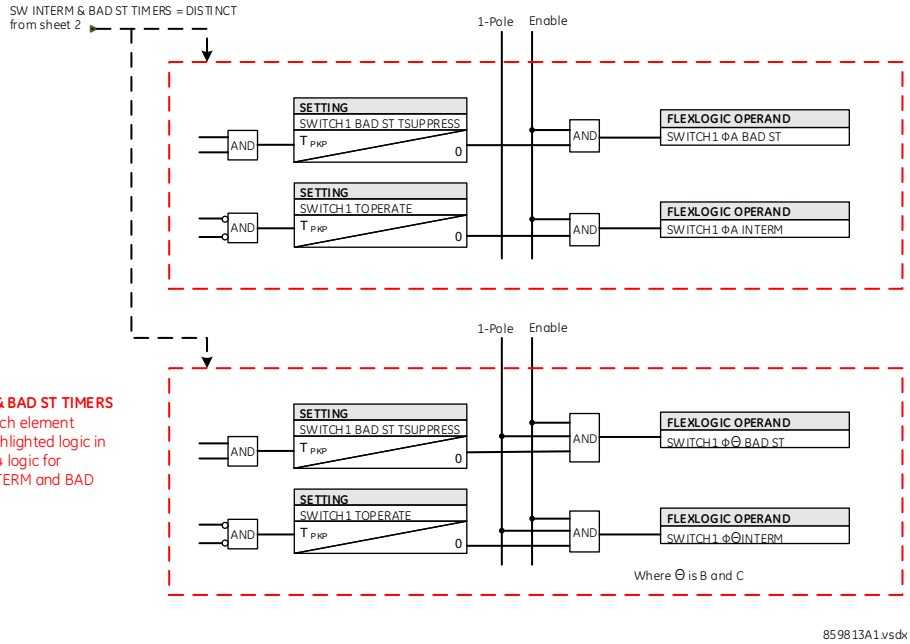

5.5.6 FlexCurves

5.5.6.1 Settings

SETTINGS ⇨⇩ SYSTEM SETUP ⇨⇩ FLEXCURVES ⇨⇩ FLEXCURE A(D)

```
■ FLEXCURVE A
■
```

⇔

```
FLEXCURVE A TIME AT
0.00 xPKP:    0 ms
```

Range: 0 to 65535 ms in steps of 1

⇕

```
FLEXCURVE A TIME AT
0.05 xPKP:    0 ms
```

Range: 0 to 65535 ms in steps of 1

⇩

⇧

```
FLEXCURVE A TIME AT
20.00xPKP:    0 ms
```

Range: 0 to 65535 ms in steps of 1

FlexCurves A through D have settings for entering times to reset and operate at the following pickup levels: 0.00 to 0.98 and 1.03 to 20.00. This data is converted into two continuous curves by linear interpolation between data points. To enter a custom FlexCurve, enter the reset and operate times (using the **VALUE** keys) for each selected pickup point (using the **MESSAGE** up/down keys) for the required protection curve (A, B, C, or D).

Table 5-16: FlexCurve table

Reset	Time ms	Reset	Time ms	Operate	Time ms	Operate	Time ms	Operate	Time ms	Operate	Time ms
0.00		0.68		1.03		2.9		4.9		10.5	
0.05		0.70		1.05		3.0		5.0		11.0	
0.10		0.72		1.1		3.1		5.1		11.5	
0.15		0.74		1.2		3.2		5.2		12.0	
0.20		0.76		1.3		3.3		5.3		12.5	
0.25		0.78		1.4		3.4		5.4		13.0	
0.30		0.80		1.5		3.5		5.5		13.5	
0.35		0.82		1.6		3.6		5.6		14.0	
0.40		0.84		1.7		3.7		5.7		14.5	
0.45		0.86		1.8		3.8		5.8		15.0	
0.48		0.88		1.9		3.9		5.9		15.5	
0.50		0.90		2.0		4.0		6.0		16.0	
0.52		0.91		2.1		4.1		6.5		16.5	
0.54		0.92		2.2		4.2		7.0		17.0	
0.56		0.93		2.3		4.3		7.5		17.5	
0.58		0.94		2.4		4.4		8.0		18.0	
0.60		0.95		2.5		4.5		8.5		18.5	
0.62		0.96		2.6		4.6		9.0		19.0	
0.64		0.97		2.7		4.7		9.5		19.5	
0.66		0.98		2.8		4.8		10.0		20.0	

NOTE

The relay using a given FlexCurve applies linear approximation for times between the user-entered points. Take care when setting the two points that are close to the multiple of pickup of 1; that is, 0.98 pu and 1.03 pu. It is recommended to set the two times to a similar value, otherwise the linear approximation can result in undesired behavior for the operating quantity that is close to 1.00 pu.

5.5.6.2 FlexCurve configuration with EnerVista software

The EnerVista software allows for easy configuration and management of FlexCurves and their associated data points. Prospective FlexCurves can be configured from a selection of standard curves to provide the best approximate fit, then specific data points can be edited afterwards. Alternately, curve data can be imported from a specified file (.csv format) by selecting the EnerVista **Import Data From** setting (**Settings > System Setup > FlexCurves > FlexCurve**).

Curves and data can be exported, viewed, and cleared by clicking the appropriate buttons. FlexCurves are customized by editing the operating time (ms) values at pre-defined per-unit current multiples. Note that the pickup multiples start at zero (implying the "reset time"), operating time below pickup, and operating time above pickup.

5.5.6.3 Recloser curve editing

Recloser curve selection is special in that recloser curves can be shaped into a composite curve with a minimum response time and a fixed time above a specified pickup multiples. There are 41 recloser curve types supported. These definite operating times are useful to coordinate operating times, typically at higher currents and where upstream and downstream protective devices have different operating characteristics. The recloser curve configuration window shown here appears when the **Initialize From** setting in the EnerVista software is set to “Recloser Curve” and the **Initialize FlexCurve** button is clicked.

Figure 5-83: Recloser curve initialization

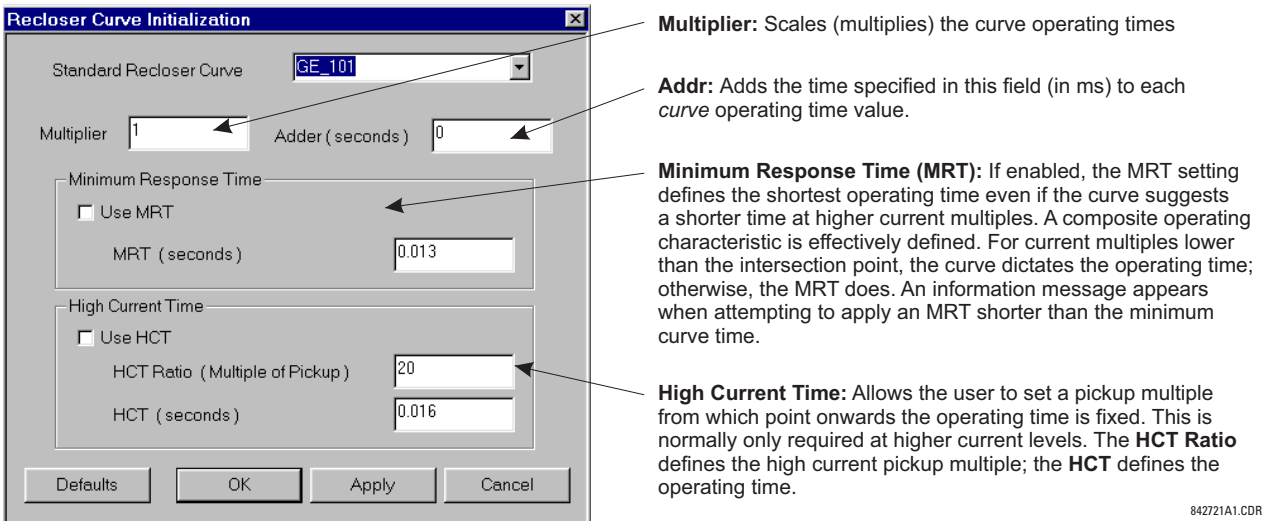

NOTE

The **Multiplier** and **Adder** settings only affect the curve portion of the characteristic and not the MRT and HCT settings. The HCT settings override the MRT settings for multiples of pickup greater than the HCT ratio.

5.5.6.4 Example

A composite curve can be created from the GE_111 standard with MRT = 200 ms and HCT initially disabled and then enabled at eight times pickup with an operating time of 30 ms. At approximately four times pickup, the curve operating time is equal to the MRT and from then onwards the operating time remains at 200 ms.

Figure 5-84: Composite recloser curve with HCT disabled

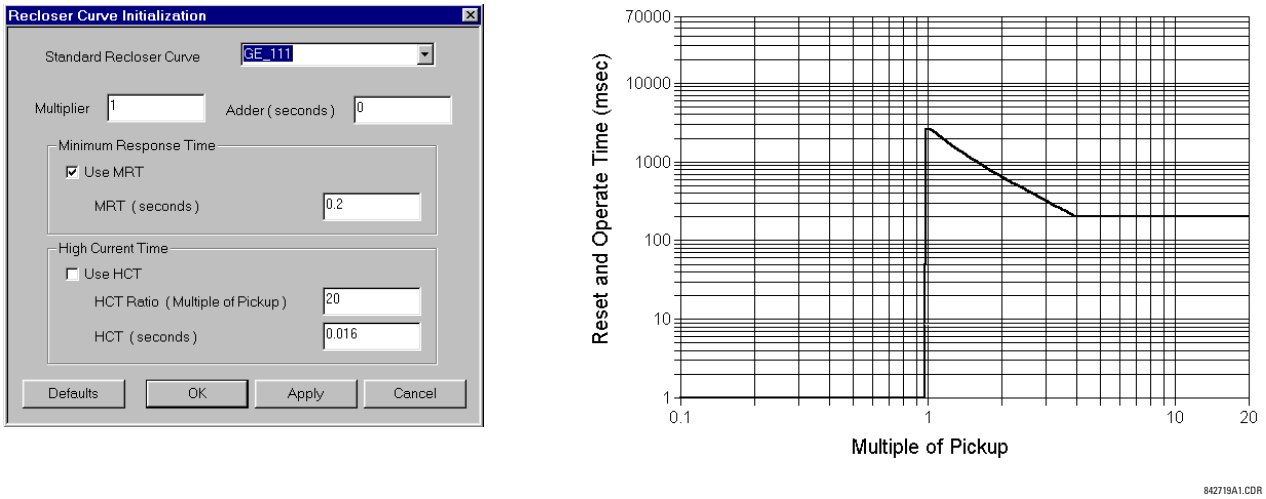

With the HCT feature enabled, the operating time reduces to 30 ms for pickup multiples exceeding eight times pickup.

Figure 5-85: Composite recloser curve with HCT enabled

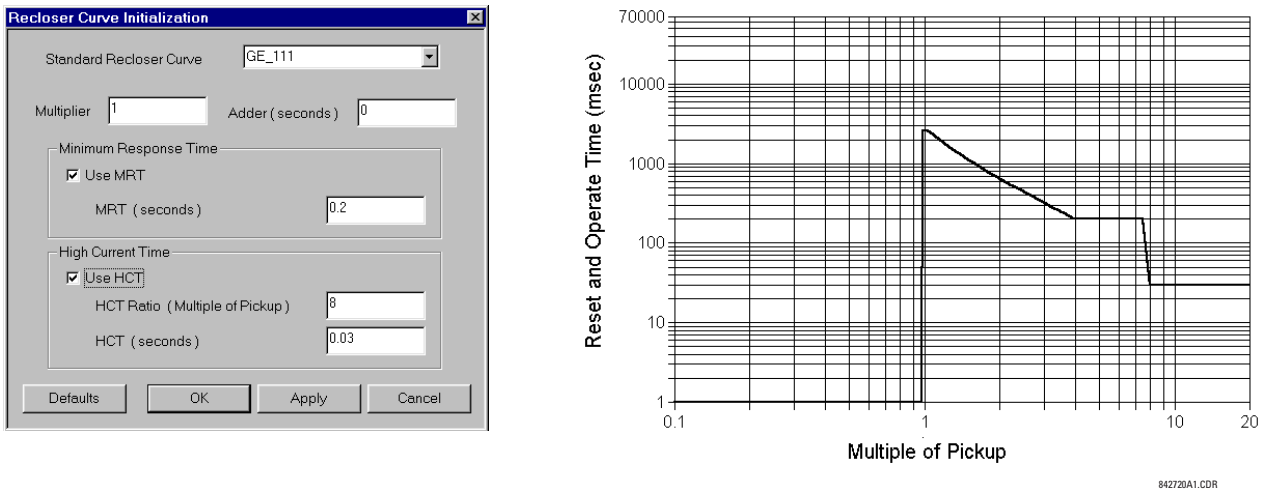

NOTE

Configuring a composite curve with an increase in operating time at increased pickup multiples is not allowed. If this is attempted, the EnerVista software generates an error message and discards the proposed changes.

5.5.6.5 Standard recloser curves

The following graphs display standard recloser curves available for the N60.

Figure 5-86: Recloser curves GE101 to GE106

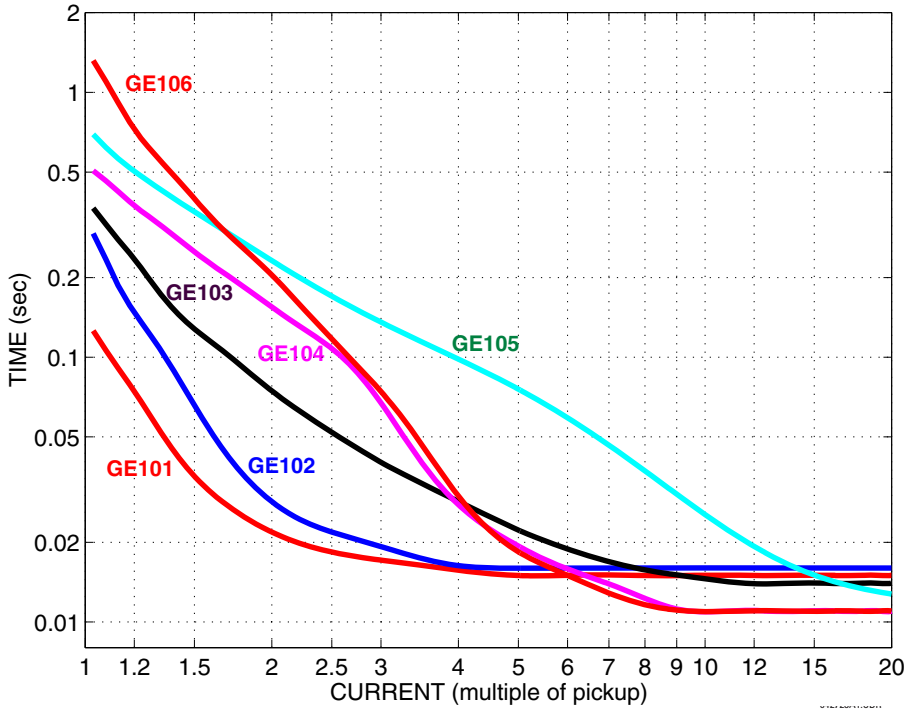

Figure 5-87: Recloser curves GE113, GE120, GE138, and GE142

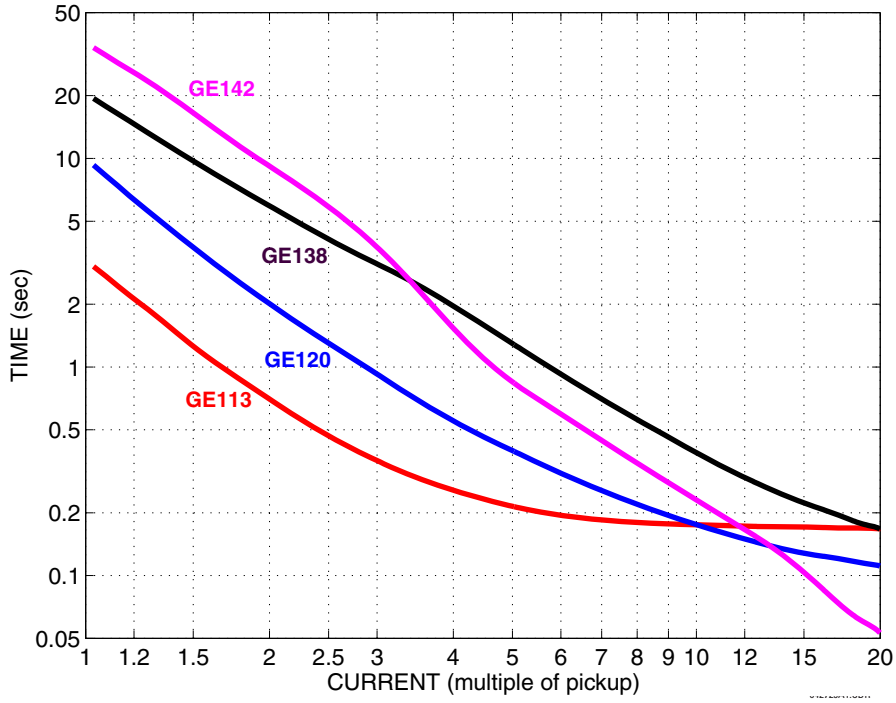

5

Figure 5-88: Recloser curves GE134, GE137, GE140, GE151, and GE201

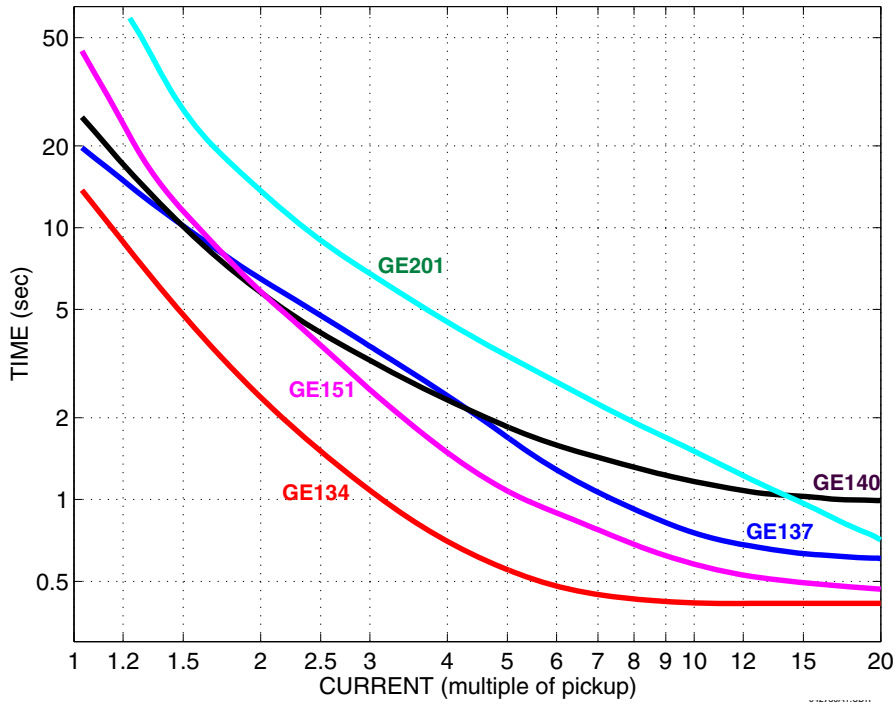

Figure 5-89: Recloser curves GE131, GE141, GE152, and GE200

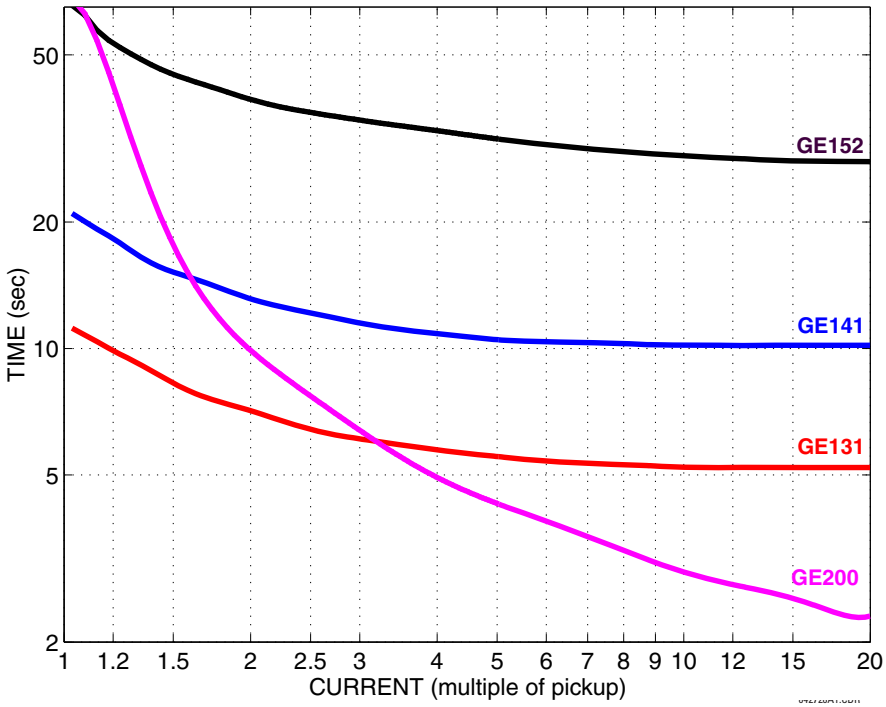

Figure 5-90: Recloser curves GE133, GE161, GE162, GE163, GE164, and GE165

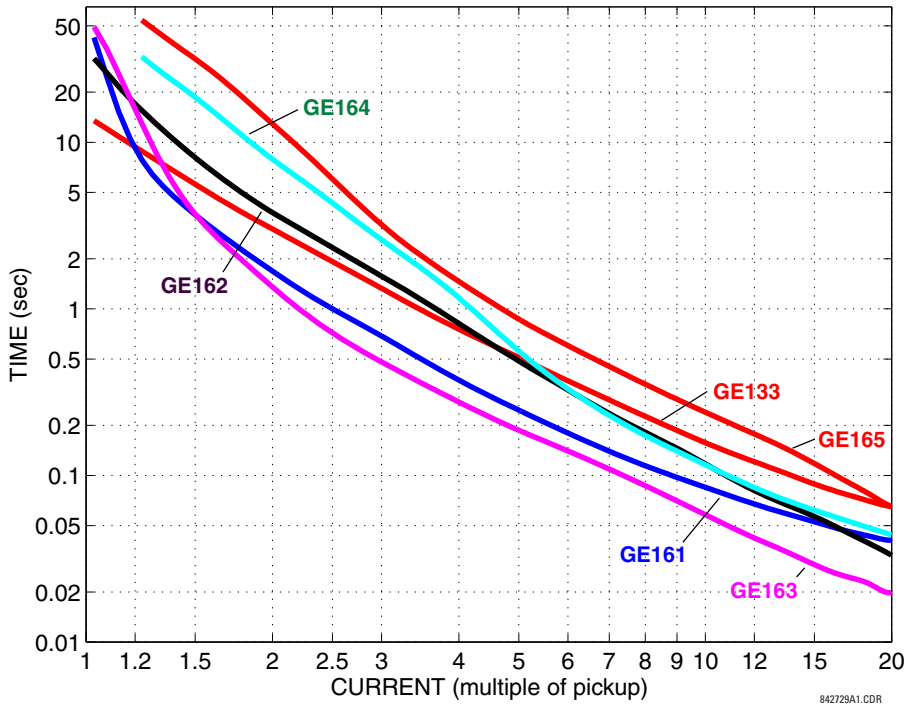

Figure 5-91: Recloser curves GE116, GE117, GE118, GE132, GE136, and GE139

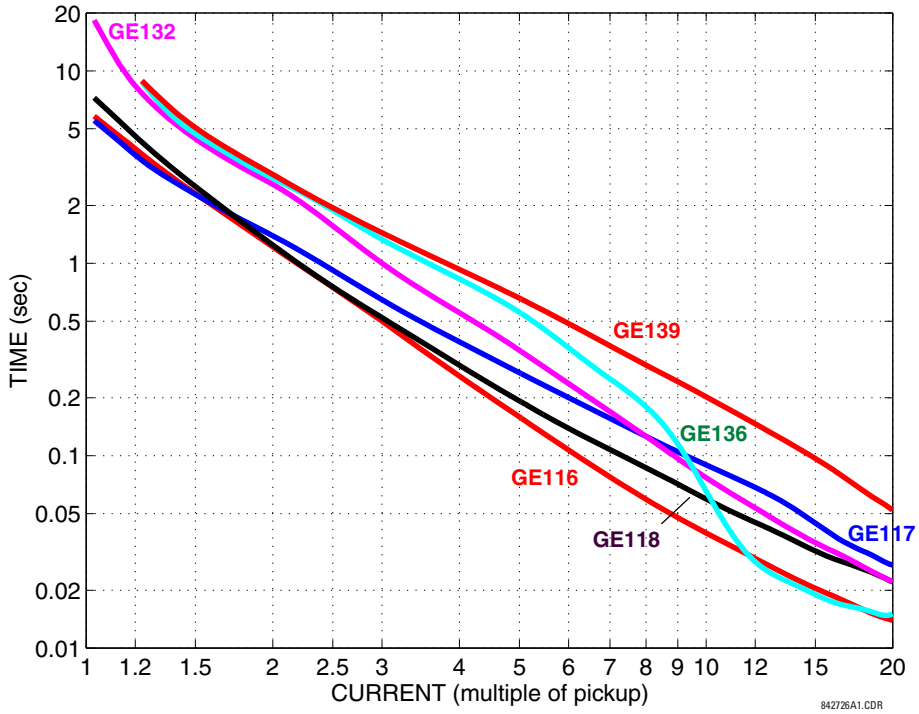

5

Figure 5-92: Recloser curves GE107, GE111, GE112, GE114, GE115, GE121, and GE122

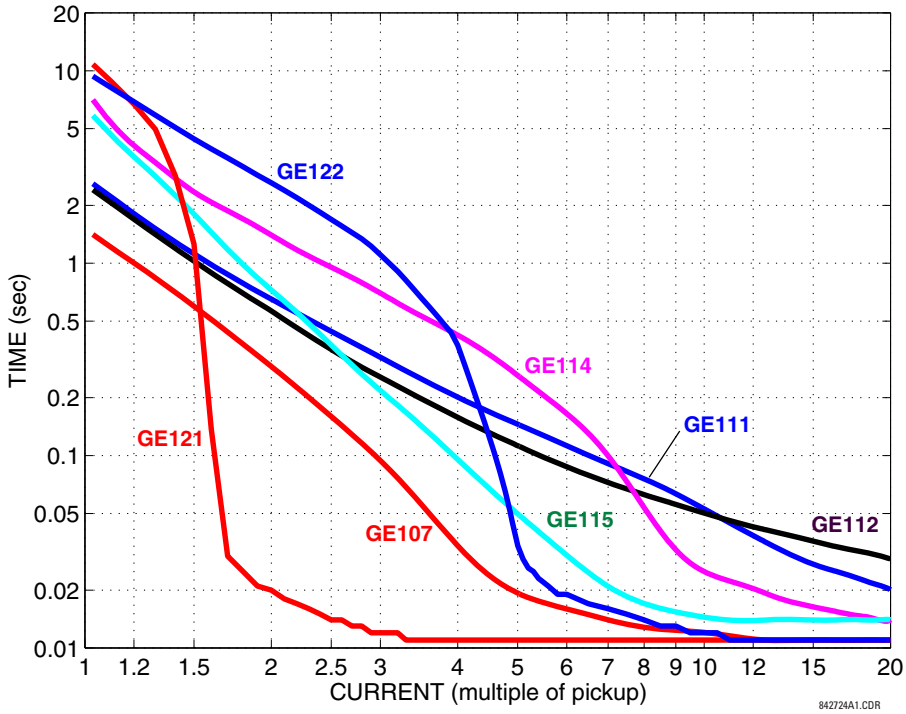

Figure 5-93: Recloser curves GE119, GE135, and GE202

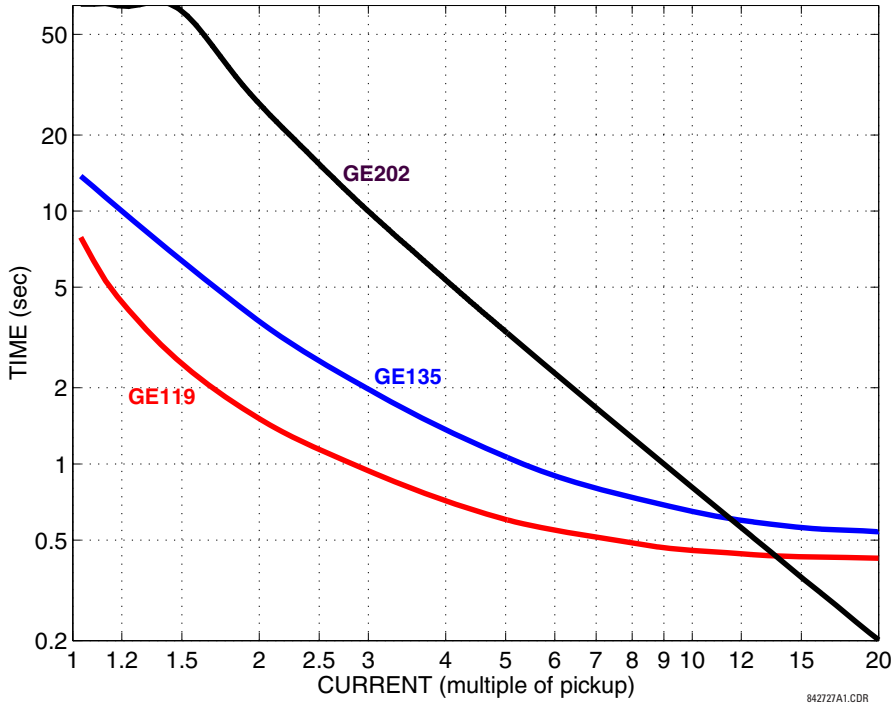

5.5.7 Phasor Measurement Unit

5.5.7.1 Menu

SETTINGS ⇨⇩ SYSTEM SETUP ⇨⇩ PHASOR MEASUREMENT UNIT

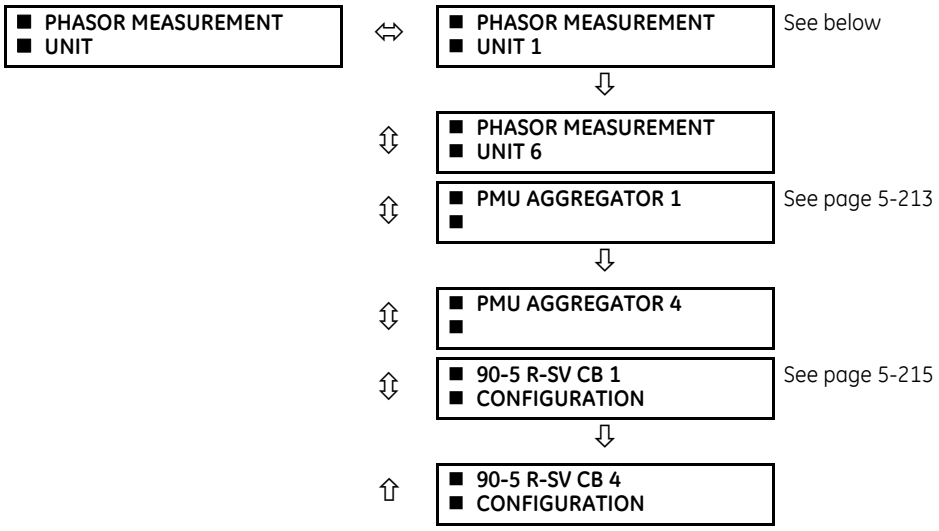

The N60 is provided with an optional Phasor Measurement Unit (PMU) feature, specified as a software option at the time of ordering. The number of PMUs available depends on the option.

5.5.7.2 Synchrophasor implementation

Phasors are used in protection relays. When these phasors are referenced to a common time base, they are referred to as synchrophasors. A vastly improved method for tracking power system dynamic phenomena for power system monitoring, protection, operation, and control can be realized when synchrophasors from different locations within the power system are networked to a central location.

The N60 offers PMU features over two communication standards, IEC 61850-90-5 and IEEE C37.118. The figure shows complete synchrophasor implementation.

Figure 5-94: Synchrophasor implementation

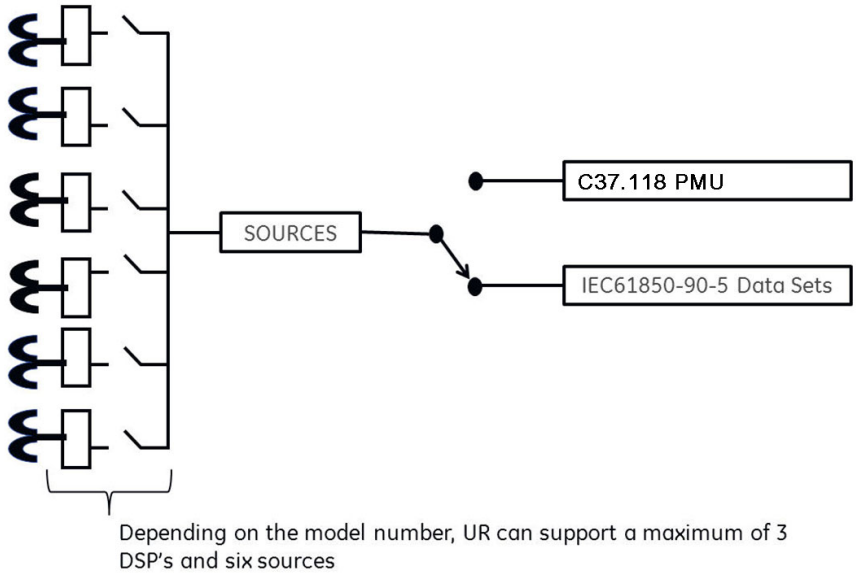

5.5.7.3 Implementation of IEC 61850-90-5

Synchrophasor data as measured and calculated by PMUs is used to assess the condition of the electrical power network. The IEEE C37.118 standards define synchrophasors and related message formats to transmit synchrophasor data. Synchrophasor streaming via IEEE C37.118 has proven to work but the need to have a communication mechanism that is compliant with the concept of IEC 61850 has led to the development of IEC 61850-90-5. The IEC 61850-90-5 technical report defines the packet structure for multicast routing of streamed Sampled Value (SV) known as R-SV.

UR firmware versions 7.0 and above have a 90-5 based R-SV implementation equivalent in structure and configuration to that of the existing IEEE C37.118 implementation of firmware version 6.0, that is, synchrophasor data at rates up to 60 Hz for metering and 120 Hz for protection class synchrophasors. The following two figures depict the general data flow for the generation of synchrophasor data for IEC 61850-90-5. In the first figure, when IEC 61850-90-5 is selected all real and virtual sources are available for the IEC 61850-90-5 PMUs.

The number of PMUs and aggregators vary by product, as outlined in the table.

Table 5-17: PMU implementation by UR device

UR device	Number of PMUS	Number of aggregators	Comment
N60	1, 2, 4, or 6	1 with 1 PMU 2 with 2 or 4 PMUs 4 with 6 PMUs	Number of PMUs is ordered using software options
C60, C95	2	2	
D60, F60, G60, L30, L90, T60	1	1	

The figure shows an example of an N60 using four Logical Device PMUs (Logical Device 2 through 5) and four aggregators. The control blocks for the aggregators are located in LD1. A 64 character LDName setting is provided.

Figure 5-95: N60 example for four logical device PMUs

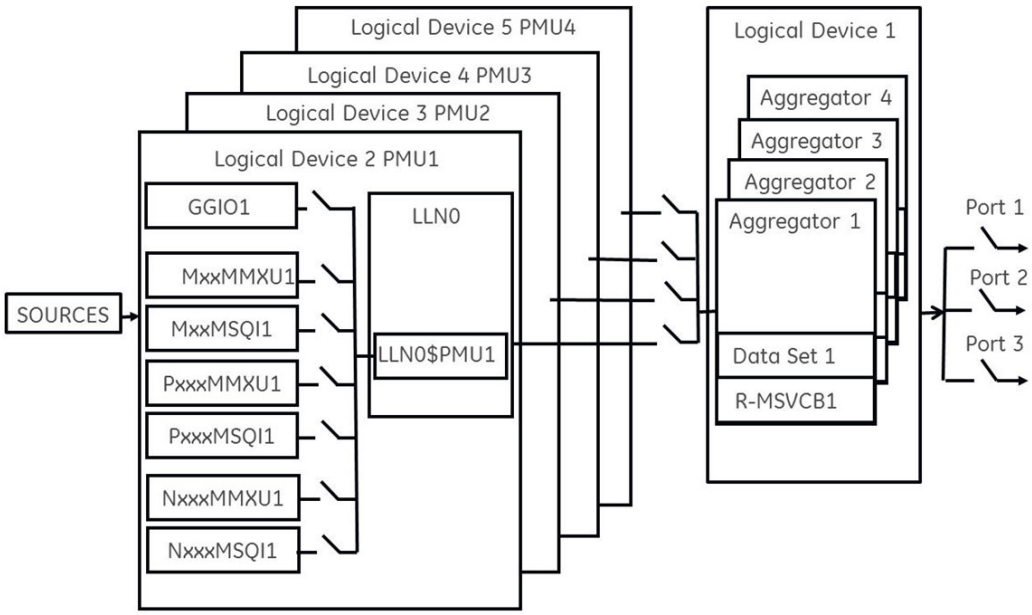

NOTE Precise time input to the relay from the international time standard, via either IRIG-B or PTP, is vital for correct synchrophasor measurement and reporting. For IRIG-B, a DC level shift IRIG-B receiver must be used for the PMU to output proper synchrophasor values.

Depending on the applied filter, the synchrophasors that are produced by PMUs are classified as either P (protection) or M (Measurement) class synchrophasors. Synchrophasors available within the UR that have no filtering applied are classified as NONE, which within the standard is classified as PRES OR UNKNOWN under the Calculation Method - ClcMth. Each Logical Device PMU supports one MxxMMXU, MxxMSQI, PxxxMMXU, PxxxMSQI, NxxMMXU, and one NxxMSQI logical node.

Figure 5-96: Logical nodes supported in each logical device

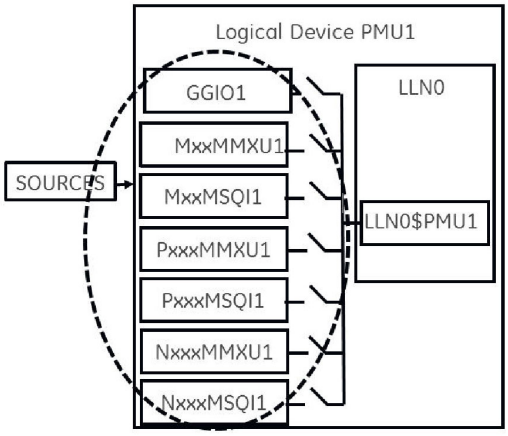

The following is a summary of LNs that are in each Logical Device (LD2 through LD7):

- PxxxMMXU1 ClcMth = P-Class (Note Vaux is mapped to Vneut of MMXU)
- PxxxMSQI1 ClcMth = P-CLASS
- MxxMMXU1 ClcMth = M-Class (Note Vaux is mapped to Vneut of MMXU)
- MxxMSQI1 ClcMth = M-CLASS
- NxxMMXU1 ClcMth = M-Class (Note Vaux is mapped to Vneut of MMXU)

- NxxMSQI1 ClcMth = M-CLASS
- GGIO1, which contains 16 digital status indication points and 16 analog points. The Analog GGIO values are selectable from any FlexAnalog value in the UR.

NOTE The Synchro Logical Nodes in an LD report at the same rate as set in the PMUn Basic Configuration setting. This is reflected in the instantiation of the Data Object – SmpRate in the msvcb## of LLN0 in the LD1. SmpRate is a Read Only Integer Status (INS).

When the first PMU from any LD is mapped into an aggregator, the aggregator inherits the Sample Rate (SmpRate) and IEEE C37.118 Class (P or M) of that PMU. The value of the SmpRate DO in the Report Control Block is set based on the value of the Sample Rate in the PMU. The Class of the Dataset are mapped into the MSVID of the Dataset (see text that follows for the overall name of the MSVID). If other PMUs are mapped into the same aggregator with different Sample Rates or from different classes, then a Self-Test error (DatSetErr) is set and dataset transmission is blocked.

A setting value — MSVID — is created with a maximum input range of 56 characters (=64 less 6 for the IDCode less 2 for the Class).

The value of MSVID in the dataset is a concatenation of the aggregator IDCode and the MSVID setting value in the format: MSVID-AggregatorIDCode-CLASS where CLASS is P, M, or N (for None) – depending on the Class of the first PMU included in the Aggregator.

NOTE Synchrophasor Rectangular Format and Integer data types are NOT supported in IEC 61850-90-5 (only supported with IEEE C37.118) and not to set — GGIO1 that contains 16 digital status indication points — aggregated as a 16 bit bitstring and 16 analog points. The Analog GGIO values are selectable from any FlexAnalog value in the UR. For firmware versions 7.0 and later, the description fields for the phasors, analog, and digital channels are populated with the 16 character name field provided within the Basic Configuration menu. Additionally, the names of the 16 binary points are implemented as numbered descriptions — d1, d2, d3, and so on. The number of descriptions are equal to the number of bits configured in the 16 bit digital status word.

All bitstrings less than or equal to 32 bits in length map into a 32 bit bitstring in an IEC 61850-90-5 dataset.

The Value of the Nominal Frequency of the chassis is instantiated as a DO in LPHD of LD1. The value is named HzNom and is an Integer Status (INS).

The UR also supports the option to apply no filtering to the synchrophasors. If no filtering is applied (PMU Class = None), according to the standard, the ClcMth attribute is PRES. The semantic of the ClcMth used is not carried in the individual DO and so it is recommended that one of letters of the prefix on the instantiated LNs be set to “P” or “M” accordingly in order to differentiate. For firmware versions 7.0 and later, only FCDA data is supported. The PMU Implementation by UR Device table earlier indicates the maximum size of each PMU data set for version 7.2 and later using FCDA data (non-structured data).

5.5.7.4 Example: Protection synchrophasors data set with reporting rate 60 frames/second

This example gives the protection synchrophasors data set with a reporting rate of 60 frames per second (P60MMXU1). See the figure earlier, Logical Nodes Supported in Each Logical Device. This data or list of items, as shown in the following figure, is not available to the UR setup program but is available to be mapped by the user into a selected aggregator or aggregators dataset. The logical device name (LDName) of each PMU LD is a 64 character user setting. The IEEE C37.118 STN and IDCode is to be mapped as a concatenated value in the (d)escription field of LPL CDC of the NamPlt DO in LLN0. The mapping is implemented as STN-IDCode (text string).

From each PMU, the user selects the phasor information of interest that is mapped into the selected aggregator datset(s). For version 7.0 and later, only FCDA data is supported.

Figure 5-97: Data set created from user-selected internal items

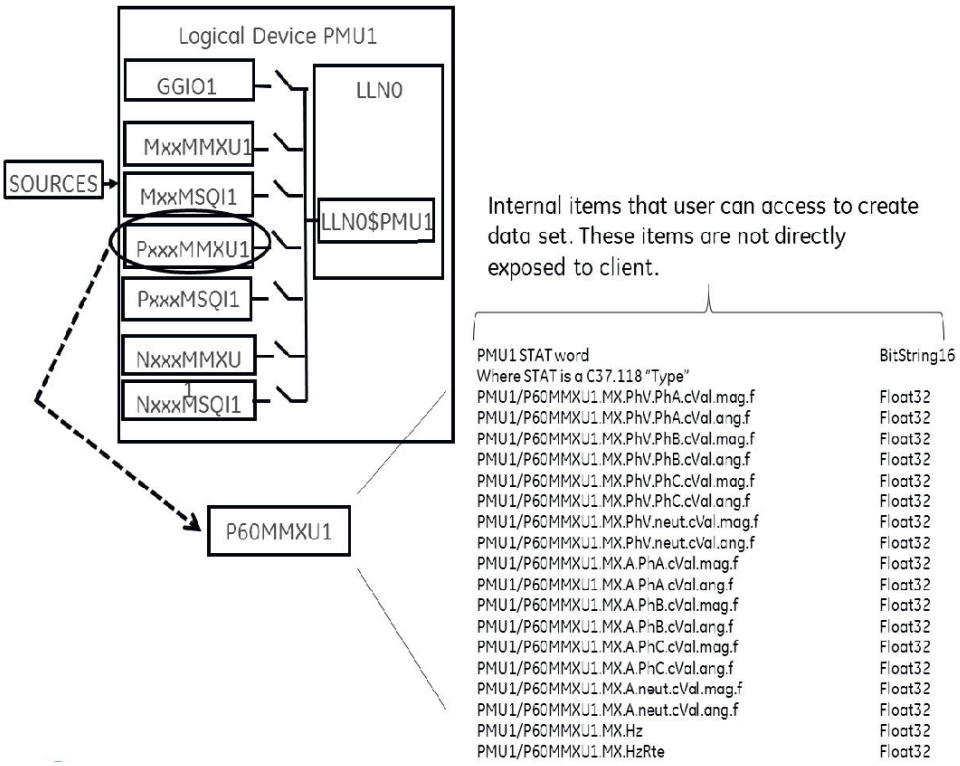

5.5.7.5 Example: Creation of different data sets

The aggregators allow the aggregation of phasors from multiple PMUs (with the same reporting rate) into a single custom data set to optimize bandwidth when streaming.

Figure 5-98: Example of aggregator data sets

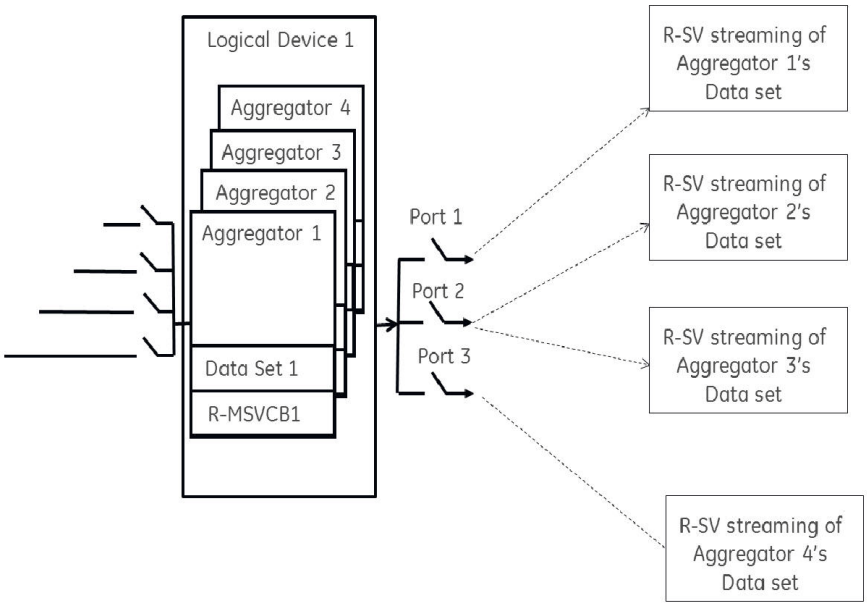

5.5.7.6 Configuration example: CFG-2 based configuration (using IEC 61850-90-5)

The N60 is expected to send the CFG-2 file (IEEE C37.118 config. file) upon request from the upstream synchrophasor devices (for example, P30) without stopping R-SV multicasting, as shown in the following figure. The primary domain controller (PDC) does not need to use a stop/start data stream command if the UR protocol is set to IEC 61850-90-5 prior to requesting the configuration via CFG-2 (IEEE C37.118 config. file). The CFG-2 request from the P30 can be on TCP/IP or UDP/IP, however, R-SV data streaming is only UDP multicasts (not TCP).

Figure 5-99: CFG-2 based configuration solution

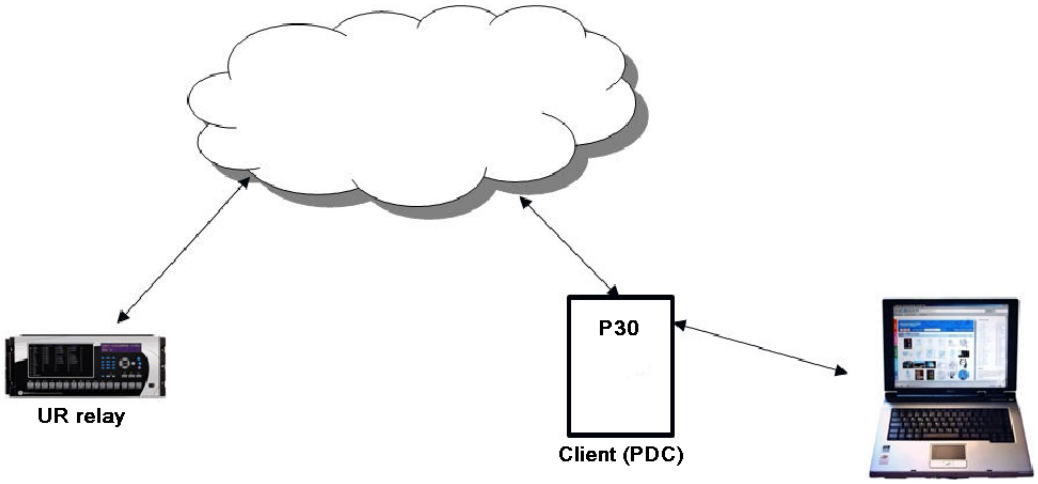

5

5.5.7.7 Modification of SYNC word in CFG-2 for TR 90-5 data sets

In the CFG-2 file, all relevant information about the data being streamed is included. However, this file does not include the fact that it describes a 90-5 dataset or the number of Application Service Data Units (datasets). In order to communicate this information via the CFG-2 file for a given aggregator, when the aggregator is set to 90-5, the version number of the CFG-2 file (found in bits 0-3 of the frame SYNC word, which is set presently to 2) is set as follows:

Value (decimal)	Number of ASDUs
11	1
12	2
13	3
14	4

5.5.7.8 Settings

SETTINGS ⇨⇩ SYSTEM SETUP ⇨⇩ PHASOR MEASUREMENT UNIT ⇨⇩ PHASOR MEASUREMENT UNIT 1(6)

■ PHASOR MEASUREMENT ■ UNIT 1	⇔	■ PMU 1 BASIC ■ CONFIGURATION	See below
	⇩	■ PMU 1 ■ CALIBRATION	See page 5-204
	⇩	■ PMU 1 ■ TRIGGERING	See page 5-206
	⇧	■ PMU 1 ■ RECORDING	See page 5-212

5.5.7.9 Basic configuration

SETTINGS ⇨⇩ SETTINGS ⇨⇩ SYSTEM SETUP ⇨⇩ PHASOR MEASUREMENT UNIT ⇨ PHASOR MEASURMENT UNIT1(6) ⇨ PMU 1 BASIC CONFIGURATION ⇨

■ PMU 1 BASIC ■ CONFIGURATION	⇔	PMU 1 FUNCTION: Disabled	Range: Enabled, Disabled
	⇩	PMU 1 IDCODE: 1	Range: 1 to 65534 in steps of 1
	⇩	PMU 1 STN: GE-UR-PMU	Range: Up to 20 character ASCII string
	⇩	PMU 1 GLOBAL PMU ID: GE-UR-PMU-000001	Range: 16-character ASCII string
	⇩	PMU 1 LATITUDE: 0.00000 °	Range: -90.00000 to 90.00000 in steps of 0.00001 deg.
	⇩	PMU 1 LONGITUDE: 0.00000 °	Range: -179.99999 to 180.00000 in steps of 0.00001 deg.
	⇩	PMU 1 ELEVATION: 0.000 m	Range: -9999.999 to 9999.999 in steps of 0.001 meters
	⇩	PMU 1 SIGNAL SOURCE: SRC 1	Range: available signal sources
	⇩	PMU 1 CLASS: M-CLASS	Range: None, M-CLASS, P-CLASS
	⇩	PMU 1 RATE: 10/sec	Range: 1, 2, 4, 5, 10, 12, 15,20, 25, 30,50, 60, 100, 120 /sec
	⇩	PMU 1 f & df/dt FILTER: None	Range: None, 10Hz/s <10Hz, 10Hz/s <20Hz, 20Hz/s <10Hz, 20Hz/s <20Hz
	⇩	■ C37.118 PMU 1 ■ CONFIGURATION	See below
	⇩	PMU 1 PHS- 1: Off	Range: available synchrophasor values
		⇩	
	⇩	PMU 1 PHS-14: Off	Range: available synchrophasor values
	⇩	PMU 1 PHS- 1: NM: GE-UR-PMU-PHS 1	Range: 20-character ASCII string
		⇩	
	⇩	PMU 1 PHS-14: NM: GE-UR-PMU-PHS 14	Range: 20-character ASCII string
	⇩	PMU 1 A-CH- 1: Off	Range: available FlexAnalog values
		⇩	
	⇩	PMU 1 A-CH-16: Off	Range: available FlexAnalog values
	⇩	PMU 1 A-CH- 1: NM: AnalogChannel 1	Range: 20-character ASCII string
		⇩	
	⇩	PMU 1 A-CH-16: NM: AnalogChannel 16	Range: 20-character ASCII string

5

⇕	**PMU 1 D-CH- 1: Off**	Range: available FlexLogic operands
⇕	**PMU 1 D-CH-16: Off**	Range: available FlexLogic operands
⇕	**PMU 1 D-CH- 1 NM: Dig Channel 1**	Range: 20-character ASCII string
⇕	**PMU 1 D-CH-16 NM: Dig Channel 16**	Range: 20-character ASCII string
⇕	**PMU 1 D-CH- 1 NORMAL STATE: Off**	Range: Off, On
⇕	**PMU 1 D-CH-16: NORMAL STATE: Off**	Range: Off, On
⇧	**■ 90-5 PMU 1 ■ CONFIGURATION**	See below

This section contains basic Phasor Measurement Unit (PMU) data, such as functions, source settings, and names.

PMU 1 FUNCTION — This setting enables the LOGICAL Device PMU 1 functionality. Use this setting to permanently enable or disable the feature.

PMU 1 IDCODE — This setting assigns a numerical ID to the PMU. It corresponds to the IDCODE field of the data, configuration, header, and command frames of the IEEE C37.118 protocol. The PMU uses this value when sending data, configuration, and header frames; and it responds to this value when receiving the command frame. This is used when only data from one PMU is present.

PMU 1 STN — This setting assigns an alphanumeric ID to the PMU station. It corresponds to the STN field of the configuration frame of the IEEE C37.118 protocol. This value is a 16-character ASCII string as per the IEEE C37.118 standard.

PMU 1 GLOBAL PMU ID — This setting is used to assign a global ID to the PMU and corresponds to the G_PMU_ID field in configuration 3 (CFG-3) message per the C37.118 protocol. This ID allows uniquely identifying PMUs in a system that has more than 65535 PMUs.

PMU 1 LATTITUDE — This setting is used to assign PMU Latitude in degrees, where positive values are N of equator, and negative values are S of equator.

PMU 1 LONGITUDE — This setting is used to assign PMU longitude in degrees, where positive values are E of the prime meridian, and negative values are W of the prime meridian.

PMU 1 ELEVATION — This setting is used to assign PMU elevation in meters, where positive values are above sea level, and negative values are below sea level.

PMU 1 SIGNAL SOURCE — This setting specifies one of the available N60 signal sources for processing in the PMU. Any combination of voltages and currents can be configured as a source. The current channels can be configured as sums of physically connected currents. This facilitates PMU applications in breaker-and-a-half, ring-bus, and similar arrangements. The PMU feature calculates voltage phasors for actual voltage (A, B, C, and auxiliary) and current (A, B, C, and ground) channels of the source, as well as symmetrical components (0, 1, and 2) of both voltages and currents. When configuring communication and recording features of the PMU, the user can select, from the above superset, the content to be sent out or recorded. When one source is selected by one PMU, it cannot be selected by another PMU.

PMU 1 CLASS (Range P, M, None) — This setting selects the synchrophasor class. A reporting rate of 100 or 120 can only be selected for class P synchrophasors and if the system frequency is 50 or 60 Hz, respectively.

PMU 1 NETWORK REPORTING FORMAT — This setting selects between reporting synchrophasors as 16-bit integer or 32-bit IEEE floating point numbers. This setting complies with bit-1 of the FORMAT field of the C37.118 configuration frame. Note that this setting applies to synchrophasors only; the user-selectable FlexAnalog channels are always transmitted as 32-bit integer values.

PMU 1 NETWORK REPORTING STYLE — This setting selects between reporting synchrophasors in rectangular (real and imaginary) or in polar (magnitude and angle) coordinates. This setting complies with bit-0 of the FORMAT field of the C37.118 configuration frame.

PMU 1 RATE — This setting specifies the reporting rate for the network (Ethernet) port. This value applies to all PMU streams of the device that are assigned to transmit over this aggregator. For a system frequency of 60 Hz (50 Hz), the N60 generates a reporting mismatch message if the selected rate is not set as 10 Hz, 12 Hz, 15 Hz, 20 Hz, 30 Hz, 60 Hz, or 120 Hz (or 10 Hz, 25 Hz, 50 Hz, or 100 Hz when the system frequency is 50 Hz) when entered via the keypad or software; and the N60 stops the transmission of reports. Note that 4 Hz is not allowed for an M-class 50 Hz system.

PMU 1 f & df/dt FILTER — This setting allows applying post-filtering to the frequency and rate-of-change of-frequency to avoid reporting erroneous values, which can possibly happen during fault, switching, and other system disturbances. For example, choosing 20Hz/s <10Hz setting ensures that if rate-of-change of-frequency between current reporting instance and previous one exceeds 20Hz/s or frequency deviation from the nominal frequency exceeds 10Hz, then new frequency and rate-of-change of-frequency value are invalidated. If this happens, the previous valid value of the frequency is maintained and rate-of-change of-frequency value is forced to 0 at this reporting instance.

PMU 1 PHS-1 to **PMU 1 PHS-14** — These settings specify synchrophasors to be transmitted from the superset of all synchronized measurements. The table outlines available synchrophasor values.

Table 5-18: Synchrophaser settings

Selection	Meaning
Va	First voltage channel, either Va or Vab
Vb	Second voltage channel, either Vb or Vbc
Vc	Third voltage channel, either Vc or Vca
Vx	Fourth voltage channel
Ia	Phase A current, physical channel or summation as per the source settings
Ib	Phase B current, physical channel or summation as per the source settings
Ic	Phase C current, physical channel or summation as per the source settings
Ig	Fourth current channel, physical or summation as per the source settings
V1	Positive-sequence voltage, referenced to Va
V2	Negative-sequence voltage, referenced to Va
V0	Zero-sequence voltage
I1	Positive-sequence current, referenced to Ia
I2	Negative-sequence current, referenced to Ia
I0	Zero-sequence current

These settings allow for optimizing the frame size and maximizing transmission channel usage, depending on a given application. Select “Off” to suppress transmission of a given value.

PMU 1 PHS-1 NM to **PMU 1 PHS-14 NM** — These settings allow for custom naming of the synchrophasor channels. Sixteen-character ASCII strings are allowed as in the CHNAM field of the configuration frame. These names are typically based on station, bus, or breaker names.

PMU 1 A-CH-1 to **PMU 1 A-CH-16** — These settings specify any analog data measured by the relay to be included as a user-selectable analog channel of the data frame. Up to 16 analog channels can be configured to send any FlexAnalog value from the relay. Examples include frequency, rate of frequency change, active and reactive power, per phase or three-phase power, power factor, temperature via RTD inputs, and THD. The configured analog values are sampled concurrently with the synchrophasor instant and sent as 32-bit floating-point values scaled to Engineering units.

PMU 1 A-CH-1 NM to **PMU 1 A-CH-16 NM** — These settings allow for custom naming of the analog channels. Sixteen-character ASCII strings are allowed as in the CHNAM field of the configuration frame.

PMU 1 D-CH-1 to **PMU 1 D-CH-16** — These settings specify any digital flag measured by the relay to be included as a user-selectable digital channel of the data frame. Up to 16 digital channels can be configured to send any FlexLogic operand from the relay. The configured digital flags are sampled concurrently with the synchrophasor instant. These values are mapped into a two-byte integer number, with byte 1 LSB corresponding to the digital channel 1 and byte 2 MSB corresponding to digital channel 16.

PMU 1 D-CH-1 NM to **PMU 1 D-CH-16 NM** — These settings allow for custom naming of the digital channels. Sixteen-character ASCII strings are allowed as in the CHNAM field of the configuration frame.

PMU 1 D-CH-1 NORMAL STATE to **PMU 1 D-CH-16 NORMAL STATE** — These settings allow for specifying a normal state for each digital channel. These states are transmitted in configuration frames to the data concentrator.

C37.118 PMU 1 configuration

SETTINGS ⇨⇩ SYSTEM SETUP ⇨⇩ PHASOR MEASUREMENT UNIT ⇨ PHASOR MEASURMENT UNIT1(6) ⇨ PMU 1 BASIC CONFIGURATION ⇨ C37.118 PMU 1 CONFIGURATION

■ C37.118 PMU 1 ■ CONFIGURATION	⇔	PMU 1 FORMAT: Integer	Range: Integer, Floating-point
	⇩	PMU 1 FREQ FORMAT: Integer	Range: Integer, Floating-point
	⇧	PMU 1 STYLE: Polar	Range: Polar, Rectangular

PMU 1 FORMAT — This setting selects whether synchrophasors are reported as 16-bit integers or 32-bit IEEE floating point numbers. This setting complies with bit-1 of the FORMAT field of the IEEE C37.118 configuration frame. This setting applies to synchrophasors only; user-selectable FlexAnalog channels are always transmitted as 32-bit floating point values.

PMU 1 FREQ FORMAT — This setting selects between reporting frequency and rate-of-change-of-frequency as 16-bit integer or 32-bit IEEE floating point numbers. This setting complies with bit 3 of the FORMAT field of the C37.118 configuration frame.

PMU 1 STYLE — This setting selects whether synchrophasors are reported in rectangular (real and imaginary) coordinates or in polar (magnitude and angle) coordinates. This setting complies with bit-0 of the FORMAT field of the IEEE C37.118 configuration frame.

5

NOTE

With 90-5 PMU, the FORMAT and STYLE are Floating-point and Polar respectively, as specified in the IEC 61850-90-5 technical report.

IEC 61850–90–5 PMU 1 configuration

SETTINGS ⇨⇩ SYSTEM SETUP ⇨⇩ PHASOR MEASUREMENT UNIT ⇨ PHASOR MEASURMENT UNIT1(6) ⇨ PMU 1 BASIC CONFIGURATION ⇨ 90-5 PMU 1 CONFIGURATION

■ 90-5 PMU 1 ■ CONFIGURATION	⇔	PMU 1 LDINST: PMU1	Range: 64 char ASCII text

PMU1 LDINST — A user-defined visible string (maximum 64 char ASCII test) to assign Logical Device (LD) Inst for a PMU logical device.

NOTE

As per IEC 61850-6 standard specification, the PMU LD Name is the concatenated combination (to total 64 characters) of IED Name (specified in IEC 61850 Server Settings) appended with PMU X LDINST string.

5.5.7.10 PMU calibration

SETTINGS ⇨⇩ SYSTEM SETUP ⇨⇩ PHASOR MEASUREMENT UNIT ⇨⇩ PHASOR MEASUREMENT UNIT 1(6) ⇨⇩ PMU 1(6) CALIBRATION

■ PMU 1 ■ CALIBRATION	⇔	PMU 1 VA CALIBRATION ANGLE: 0.00°	Range: –5.00 to 5.00° in steps of 0.05
	⇩	PMU 1 VA CALIBRATION MAG: 100.0%	Range: 95.0 to 105.0 in steps of 0.1%
	⇩	PMU 1 VB CALIBRATION ANGLE: 0.00°	Range: –5.00 to 5.00° in steps of 0.05

⇕	**PMU 1 VB CALIBRATION MAG: 100.0%**	Range: 95.0 to 105.0 in steps of 0.1%
⇕	**PMU 1 VC CALIBRATION ANGLE: 0.00°**	Range: –5.00 to 5.00° in steps of 0.05
⇕	**PMU 1 VC CALIBRATION MAG: 100.0%**	Range: 95.0 to 105.0 in steps of 0.1%
⇕	**PMU 1 VX CALIBRATION ANGLE: 0.00°**	Range: –5.00 to 5.00° in steps of 0.05
⇕	**PMU 1 VX CALIBRATION MAG: 100.0%**	Range: 95.0 to 105.0 in steps of 0.1%
⇕	**PMU 1 IA CALIBRATION ANGLE: 0.00°**	Range: –5.00 to 5.00° in steps of 0.05
⇕	**PMU 1 IA CALIBRATION MAG: 100.0%**	Range: 95.0 to 105.0 in steps of 0.1%
⇕	**PMU 1 IB CALIBRATION ANGLE: 0.00°**	Range: –5.00 to 5.00° in steps of 0.05
⇕	**PMU 1 IB CALIBRATION MAG: 100.0%**	Range: 95.0 to 105.0 in steps of 0.1%
⇕	**PMU 1 IC CALIBRATION ANGLE: 0.00°**	Range: –5.00 to 5.00° in steps of 0.05
⇕	**PMU 1 IC CALIBRATION MAG: 100.0%**	Range: 95.0 to 105.0 in steps of 0.1%
⇕	**PMU 1 IG CALIBRATION ANGLE: 0.00°**	Range: –5.00 to 5.00° in steps of 0.05
⇕	**PMU 1 IG CALIBRATION MAG: 100.0%**	Range: 95.0 to 105.0 in steps of 0.1%
⇕	**PMU 1 SEQ VOLT SHIFT ANGLE: 0°**	Range: –180 to 180° in steps of 30
⇧	**PMU 1 SEQ CURR SHIFT ANGLE: 0°**	Range: –180 to 180° in steps of 30

This menu contains user angle and magnitude calibration data for the Phasor Measurement Unit (PMU). This data is combined with the factory adjustments to shift the phasors for better accuracy.

PMU 1 VA... IG CALIBRATION ANGLE — These settings recognize applications with protection class voltage and current sources, and they allow the user to calibrate each channel (four voltages and four currents) individually to offset errors introduced by VTs, CTs, and cabling. The setting values are effectively added to the measured angles. Therefore, enter a positive correction when the secondary signal lags the true signal and a negative value when the secondary signal leads the true signal.

PMU 1 VA... IG CALIBRATION MAGNITUDE — These settings recognize applications with protection class voltage and current sources, and they allow the user to calibrate each channel (four voltages and four currents) individually to offset errors introduced by VTs, CTs. The setting values are effectively a multiplier of the measured magnitudes. Therefore, entering a multiplier greater than 100% of the secondary signal increases the true signal, and a multiplier less than 100% value of the secondary signal reduces the true signal.

PMU 1 SEQ VOLT SHIFT ANGLE — This setting allows correcting positive- and negative-sequence voltages for vector groups of power transformers located between the PMU voltage point and the reference node. This angle is effectively added to the positive-sequence voltage angle and subtracted from the negative-sequence voltage angle. Note that:

- When this setting is not "0°", the phase and sequence voltages do not agree. Unlike sequence voltages, the phase voltages cannot be corrected in a general case and therefore are reported as measured.
- When receiving synchrophasor data at multiple locations, with possibly different reference nodes, it can be more beneficial to allow the central locations to perform the compensation of sequence voltages.

- This setting applies to PMU data only. The N60 calculates symmetrical voltages independently for protection and control purposes without applying this correction.
- When connected to line-to-line voltages, the PMU calculates symmetrical voltages with the reference to the AG voltage and not to the physically connected AB voltage (see the Metering Conventions section in Chapter 6).

PMU 1 SEQ CURR SHIFT ANGLE — This setting allows correcting positive and negative-sequence currents for vector groups of power transformers located between the PMU current point and the reference node. The setting has the same meaning for currents as the **PMU 1 SEQ VOLT SHIFT ANGLE** setting has for voltages. Normally, the two correcting angles are set identically, except rare applications when the voltage and current measuring points are located at different windings of a power transformer.

5.5.7.11 PMU triggering overview

SETTINGS ⇨⇩ SYSTEM SETUP ⇨⇩ PHASOR MEASUREMENT UNIT ⇨⇩ PHASOR MEASUREMENT UNIT 1(6) ⇨⇩ PMU 1(6) TRIGGERING

■ PMU 1 ■ TRIGGERING	⇔	■ PMU 1 USER ■ TRIGGER	See below
	⇩	■ PMU 1 FREQUENCY ■ TRIGGER	See page 5-207
	⇩	■ PMU 1 VOLTAGE ■ TRIGGER	See page 5-208
	⇩	■ PMU 1 CURRENT ■ TRIGGER	See page 5-209
	⇩	■ PMU 1 POWER ■ TRIGGER	See page 5-210
	⇧	■ PMU 1 df/dt ■ TRIGGER	See page 5-211

Each Phasor Measurement Unit (PMU) contains five triggering mechanisms to facilitate triggering of the associated PMU recorder, or cross-triggering of other PMUs in the system. They are

- Overfrequency and underfrequency
- Overvoltage and undervoltage
- Overcurrent
- Overpower
- High rate of change of frequency

The pre-configured triggers can be augmented with a user-specified condition built freely using programmable logic of the relay. The entire triggering logic is refreshed once every two power system cycles.

All five triggering functions and the user-definable condition are consolidated (ORed) and connected to the PMU recorder. Each trigger can be programmed to log its operation into the event recorder and to signal its operation via targets. The five triggers drive the STAT bits of the data frame to inform the destination of the synchrophasor data regarding the cause of trigger. The following convention is adopted to drive bits 11, 3, 2, 1, and 0 of the STAT word.

Figure 5-100: STAT bits logic

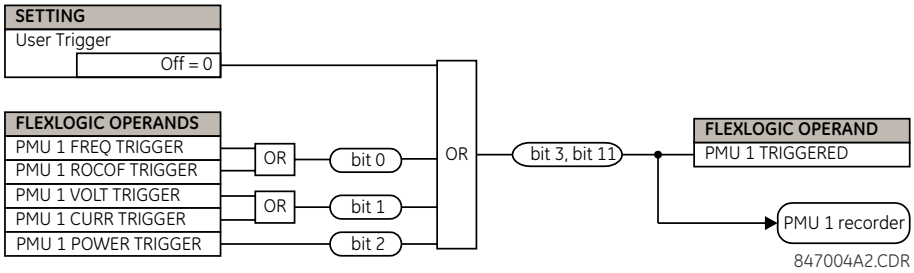

The trigger reset (drop-off) timer is available for all five triggering functions (FREQ, ROCOF, VOLT, CURR, POWER) in individual trigger settings under the **TRIGGER DPO TIME** setting. This asserts individual trigger operand and overall PMU x TRIGGERED operand with stat bits 3 and 11 for a fixed interval defined by this setting. If it is required that PMU x TRIGGERED operand with stat bits 3 and 11 stay longer than the individual reset timer, then use the **PMU x USER TRIGGER** setting assigned with appropriate elements and FlexLogic. In short, in case of **USER TRIGGER**, the drop-off time needs to be implemented using FlexLogic.

5.5.7.12 User triggering

SETTINGS ⇨⇩ SYSTEM SETUP ⇨⇩ PHASOR MEASUREMENT UNIT ⇨⇩ PHASOR MEASUREMENT UNIT 1(6) ⇨⇩ PMU 1(6) TRIGGERING ⇨⇩ PMU 1(6) USER TRIGGER

■ PMU 1 USER ■ TRIGGER	⇔	PMU 1 USER TRIGGER: Off	Range: FlexLogic operand

The user trigger allows customized triggering logic to be constructed from FlexLogic. The entire triggering logic is refreshed every two power system cycles.

5.5.7.13 Frequency triggering

SETTINGS ⇨⇩ SYSTEM SETUP ⇨⇩ PHASOR MEASUREMENT UNIT ⇨⇩ PHASOR MEASUREMENT UNIT 1(6) ⇨⇩ PMU 1(6) TRIGGERING ⇨⇩ PMU 1(6) FREQUENCY TRIGGER

■ PMU 1 FREQUENCY ■ TRIGGER	⇔	PMU 1 FREQ TRIGGER FUNCTION: Disabled	Range: Enabled, Disabled
	⇩	PMU 1 FREQ TRIGGER LOW-FREQ: 49.00 Hz	Range: 20.00 to 70.00 Hz in steps of 0.01
	⇩	PMU 1 FREQ TRIGGER HIGH-FREQ: 61.00 Hz	Range: 20.00 to 70.00 Hz in steps of 0.01
	⇩	PMU 1 FREQ TRIGGER PKP TIME: 0.10 s	Range: 0.00 to 600.00 s in steps of 0.01
	⇩	PMU 1 FREQ TRIGGER DPO TIME: 1.00 s	Range: 0.00 to 600.00 s in steps of 0.01
	⇩	PMU 1 FREQ TRIG BLK: Off	Range: FlexLogic operand
	⇩	PMU 1 FREQ TRIGGER TARGET: Self-reset	Range: Self-reset, Latched, Disabled
	⇧	PMU 1 FREQ TRIGGER EVENTS: Disabled	Range: Enabled, Disabled

The trigger responds to the frequency signal of the Phasor Measurement Unit (PMU) source. The frequency is calculated from among phase voltages, auxiliary voltage, phase currents, and ground current, in this hierarchy, depending on the source configuration as per N60 standards. This element requires that the frequency be above the minimum measurable value. If the frequency is below this value, such as when the circuit is de-energized, the trigger drops out.

PMU 1 FREQ TRIGGER LOW-FREQ — Specifies the low threshold for the abnormal frequency trigger. The comparator applies a 0.02 Hz hysteresis.

PMU 1 FREQ TRIGGER HIGH-FREQ — Specifies the high threshold for the abnormal frequency trigger. The comparator applies a 0.02 Hz hysteresis.

PMU 1 FREQ TRIGGER PKP TIME — Use to filter out spurious conditions and avoid unnecessary triggering of the recorder.

PMU 1 FREQ TRIGGER DPO TIME — Use to extend the trigger after the situation returns to normal. This setting is of importance when using the recorder in the forced mode (recording as long as the triggering condition is asserted).

Figure 5-101: Frequency trigger logic

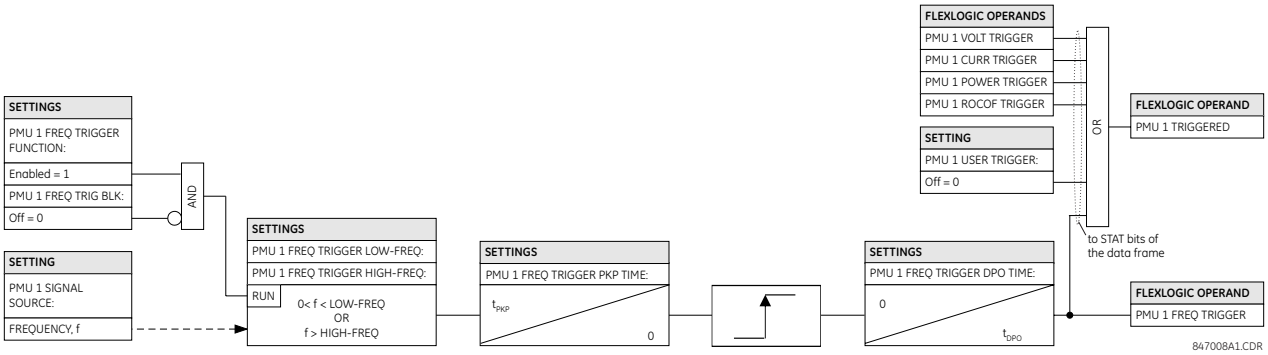

5.5.7.14 Voltage triggering

SETTINGS ⇨⇩ SYSTEM SETUP ⇨⇩ PHASOR MEASUREMENT UNIT ⇨⇩ PHASOR MEASUREMENT UNIT 1(6) ⇨⇩ PMU 1(6) TRIGGERING ⇨⇩ PMU 1(6) VOLTAGE TRIGGER

■ PMU 1 VOLTAGE ■ TRIGGER	⇔	PMU 1 VOLT TRIGGER FUNCTION: Disabled	Range: Enabled, Disabled
	⇩	PMU 1 VOLT TRIGGER LOW-VOLT: 0.800 pu	Range: 0.250 to 1.250 pu in steps of 0.001
	⇩	PMU 1 VOLT TRIGGER HIGH-VOLT: 1.200 pu	Range: 0.750 to 1.750 pu in steps of 0.001
	⇩	PMU 1 VOLT TRIGGER PKP TIME: 0.10 s	Range: 0.00 to 600.00 s in steps of 0.01
	⇩	PMU 1 VOLT TRIGGER DPO TIME: 1.00 s	Range: 0.00 to 600.00 s in steps of 0.01
	⇩	PMU 1 VOLT TRIG BLK: Off	Range: FlexLogic operand
	⇩	PMU 1 VOLT TRIGGER TARGET: Self-reset	Range: Self-reset, Latched, Disabled
	⇧	PMU 1 VOLT TRIGGER EVENTS: Disabled	Range: Enabled, Disabled

This element responds to abnormal voltage. Separate thresholds are provided for low and high voltage. In terms of signaling its operation, the element does not differentiate between the undervoltage and overvoltage events. The trigger responds to the phase voltage signal of the Phasor Measurement Unit (PMU) source. All voltage channels (A, B, and C or AB, BC, and CA) are processed independently and can trigger the recorder. A minimum voltage supervision of 0.1 pu is implemented to prevent pickup on a de-energized circuit, similarly to the undervoltage protection element.

PMU 1 VOLT TRIGGER LOW-VOLT — Specifies the low threshold for the abnormal voltage trigger, in per-unit of the PMU source. 1 pu is a nominal voltage value defined as the nominal secondary voltage times VT ratio. The comparator applies a 1% hysteresis.

PMU 1 VOLT TRIGGER HIGH-VOLT — Specifies the high threshold for the abnormal voltage trigger, in per-unit of the PMU source. 1 pu is a nominal voltage value defined as the nominal secondary voltage times VT ratio. The comparator applies a 1% hysteresis.

PMU 1 VOLT TRIGGER PKP TIME — Use to filter out spurious conditions and avoid unnecessary triggering of the recorder.

PMU 1 VOLT TRIGGER DPO TIME — Use to extend the trigger after the situation returns to normal. This setting is of importance when using the recorder in the forced mode (recording as long as the triggering condition is asserted).

Figure 5-102: Voltage trigger logic

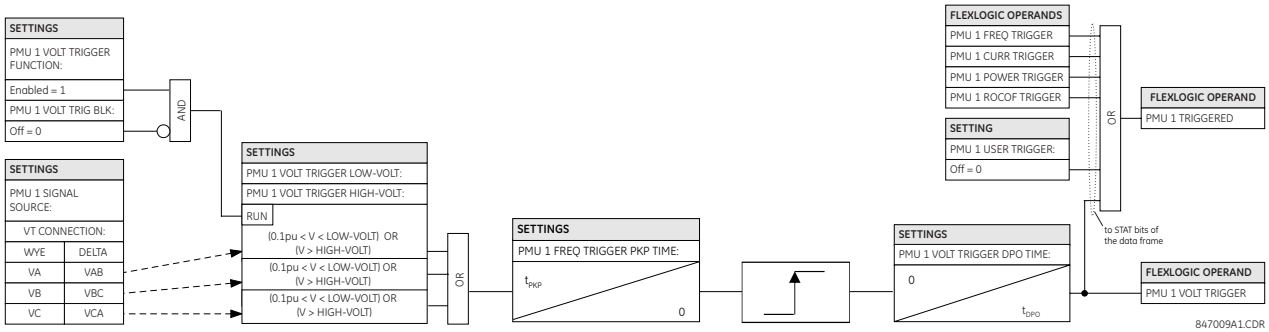

5.5.7.15 Current triggering

SETTINGS ⇨⇩ SYSTEM SETUP ⇨⇩ PHASOR MEASUREMENT UNIT ⇨⇩ PHASOR MEASUREMENT UNIT 1(6) ⇨⇩ PMU 1(6) TRIGGERING ⇨⇩ PMU 1(6) CURRENT TRIGGER

■ PMU 1 CURRENT ■ TRIGGER	⇔	**PMU 1 CURR TRIGGER FUNCTION: Disabled**	Range: Enabled, Disabled
	⇩	**PMU 1 CURR TRIGGER PICKUP: 1.800 pu**	Range: 0.100 to 30.000 pu in steps of 0.001
	⇩	**PMU 1 CURR TRIGGER PKP TIME: 0.10 s**	Range: 0.00 to 600.00 s in steps of 0.01
	⇩	**PMU 1 CURR TRIGGER DPO TIME: 1.00 s**	Range: 0.00 to 600.00 s in steps of 0.01
	⇩	**PMU 1 CURR TRIG BLK: Off**	Range: FlexLogic operand
	⇩	**PMU 1 CURR TRIGGER TARGET: Self-reset**	Range: Self-reset, Latched, Disabled
	⇧	**PMU 1 CURR TRIGGER EVENTS: Disabled**	Range: Enabled, Disabled

This element responds to elevated current. The trigger responds to the phase current signal of the Phasor Measurement Unit (PMU) source. All current channel (A, B, and C) are processed independently and can trigger the recorder.

PMU 1 CURR TRIGGER PICKUP — Specifies the pickup threshold for the overcurrent trigger, in per unit of the PMU source. A value of 1 pu is a nominal primary current. The comparator applies a 3% hysteresis.

PMU 1 CURR TRIGGER PKP TIME — Use to filter out spurious conditions and avoid unnecessary triggering of the recorder.

PMU 1 CURR TRIGGER DPO TIME — Use to extend the trigger after the situation returns to normal. This setting is of importance when using the recorder in the forced mode (recording as long as the triggering condition is asserted).

Figure 5-103: Current trigger logic

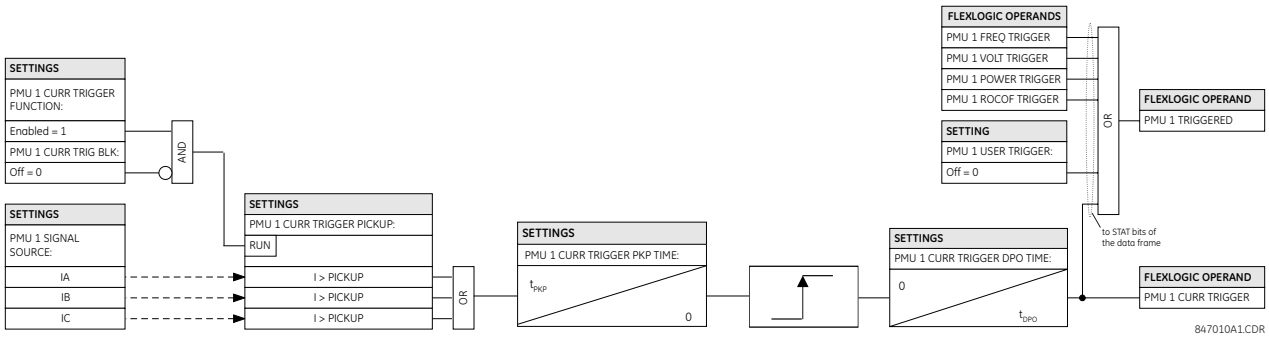

5.5.7.16 Power triggering

SETTINGS ⇨⇩ SYSTEM SETUP ⇨⇩ PHASOR MEASUREMENT UNIT ⇨⇩ PHASOR MEASUREMENT UNIT 1(6) ⇨⇩ PMU 1(6) TRIGGERING ⇨⇩ PMU 1(6) POWER TRIGGER

■ PMU 1 POWER ■ TRIGGER	⇔	PMU 1 POWER TRIGGER FUNCTION: Disabled	Range: Enabled, Disabled
	⇩	PMU 1 POWER TRIGGER ACTIVE: 1.250 pu	Range: 0.250 to 3.000 pu in steps of 0.001
	⇩	PMU 1 POWER TRIGGER REACTIVE: 1.250 pu	Range: 0.250 to 3.000 pu in steps of 0.001
	⇩	PMU 1 POWER TRIGGER APPARENT: 1.250 pu	Range: 0.250 to 3.000 pu in steps of 0.001
	⇩	PMU 1 POWER TRIGGER PKP TIME: 0.10 s	Range: 0.00 to 600.00 s in steps of 0.01
	⇩	PMU 1 POWER TRIGGER DPO TIME: 1.00 s	Range: 0.00 to 600.00 s in steps of 0.01
	⇩	PMU 1 PWR TRIG BLK: Off	Range: FlexLogic operand
	⇩	PMU 1 POWER TRIGGER TARGET: Self-reset	Range: Self-reset, Latched, Disabled
	⇧	PMU 1 POWER TRIGGER EVENTS: Disabled	Range: Enabled, Disabled

5

This element responds to abnormal power. Separate thresholds are provided for active, reactive, and apparent powers. In terms of signaling its operation, the element does not differentiate among the three types of power. The trigger responds to the single-phase and three-phase power signals of the Phasor Measurement Unit (PMU) source.

PMU 1 POWER TRIGGER ACTIVE — Specifies the pickup threshold for the active power of the source. For single-phase power, 1 pu is a product of 1 pu voltage and 1 pu current, or the product of nominal secondary voltage, the VT ratio and the nominal primary current. For the three-phase power, 1 pu is three times that for a single-phase power. The comparator applies a 3% hysteresis.

PMU 1 POWER TRIGGER REACTIVE — Specifies the pickup threshold for the reactive power of the source. For single-phase power, 1 pu is a product of 1 pu voltage and 1 pu current, or the product of nominal secondary voltage, the VT ratio and the nominal primary current. For the three-phase power, 1 pu is three times that for a single-phase power. The comparator applies a 3% hysteresis.

PMU 1 POWER TRIGGER APPARENT — Specifies the pickup threshold for the apparent power of the source. For single-phase power, 1 pu is a product of 1 pu voltage and 1 pu current, or the product of nominal secondary voltage, the VT ratio and the nominal primary current. For the three-phase power, 1 pu is three times that for a single-phase power. The comparator applies a 3% hysteresis.

PMU 1 POWER TRIGGER PKP TIME — Use to filter out spurious conditions and avoid unnecessary triggering of the recorder.

PMU 1 POWER TRIGGER DPO TIME — Use to extend the trigger after the situation returns to normal. This setting is of particular importance when using the recorder in the forced mode (recording as long as the triggering condition is asserted).

Figure 5-104: Power trigger logic

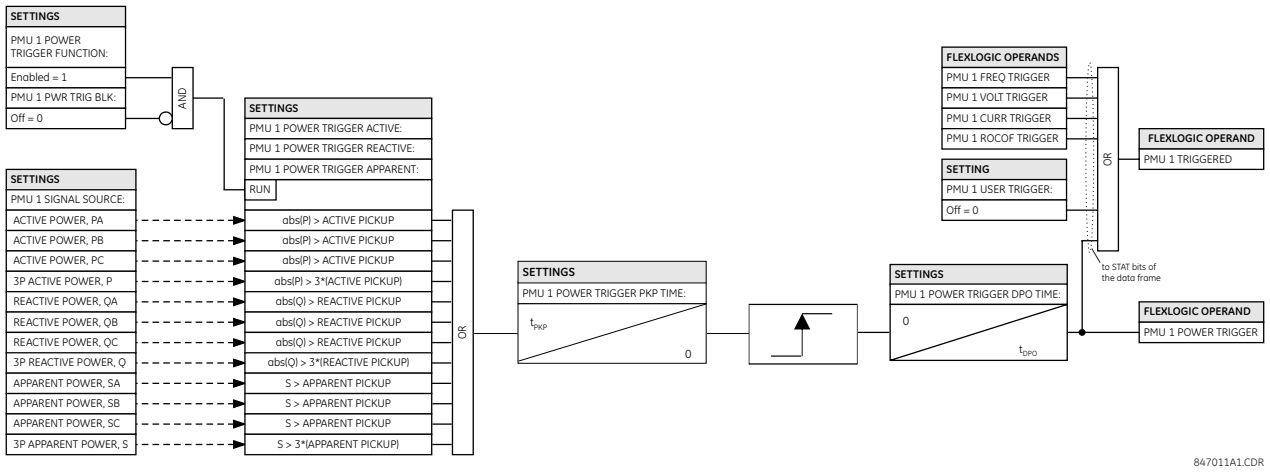

5.5.7.17 df/dt triggering

SETTINGS ⇨⇩ SYSTEM SETUP ⇨⇩ PHASOR MEASUREMENT UNIT ⇨⇩ PHASOR MEASUREMENT UNIT 1(6) ⇨⇩ PMU 1(6) TRIGGERING ⇨⇩ PMU 1(6) df/dt TRIGGER

■ PMU 1 df/dt ■ TRIGGER	⇔	**PMU 1 df/dt TRIGGER FUNCTION: Disabled**	Range: Enabled, Disabled
	⇩	**PMU 1 df/dt TRIGGER RAISE: 0.25 Hz/s**	Range: 0.10 to 15.00 Hz/s in steps of 0.01
	⇩	**PMU 1 df/dt TRIGGER FALL: 0.25 Hz/s**	Range: 0.10 to 15.00 Hz/s in steps of 0.01
	⇩	**PMU 1 df/dt TRIGGER PKP TIME: 0.10 s**	Range: 0.00 to 600.00 s in steps of 0.01
	⇩	**PMU 1 df/dt TRIGGER DPO TIME: 1.00 s**	Range: 0.00 to 600.00 s in steps of 0.01
	⇩	**PMU 1 df/dt TRG BLK: Off**	Range: FlexLogic operand
	⇩	**PMU 1 df/dt TRIGGER TARGET: Self-reset**	Range: Self-reset, Latched, Disabled
	⇧	**PMU 1 df/dt TRIGGER EVENTS: Disabled**	Range: Enabled, Disabled

This element responds to frequency rate of change. Separate thresholds are provided for rising and dropping frequency. The trigger responds to the rate of change of frequency (df/dt) of the Phasor Measurement Unit (PMU) source.

PMU 1 df/dt TRIGGER RAISE — Specifies the pickup threshold for the rate of change of frequency in the raising direction (positive df/dt). The comparator applies a 4% hysteresis.

PMU 1 df/dt TRIGGER FALL — Specifies the pickup threshold for the rate of change of frequency in the falling direction (negative df/dt). The comparator applies a 4% hysteresis.

PMU 1 df/dt TRIGGER PKP TIME — Use to filter out spurious conditions and avoid unnecessary triggering of the recorder.

PMU 1 df/dt TRIGGER DPO TIME — Use to extend the trigger after the situation returns to normal. This setting is of importance when using the recorder in the forced mode (recording as long as the triggering condition is asserted).

Figure 5-105: Rate of change of frequency trigger logic

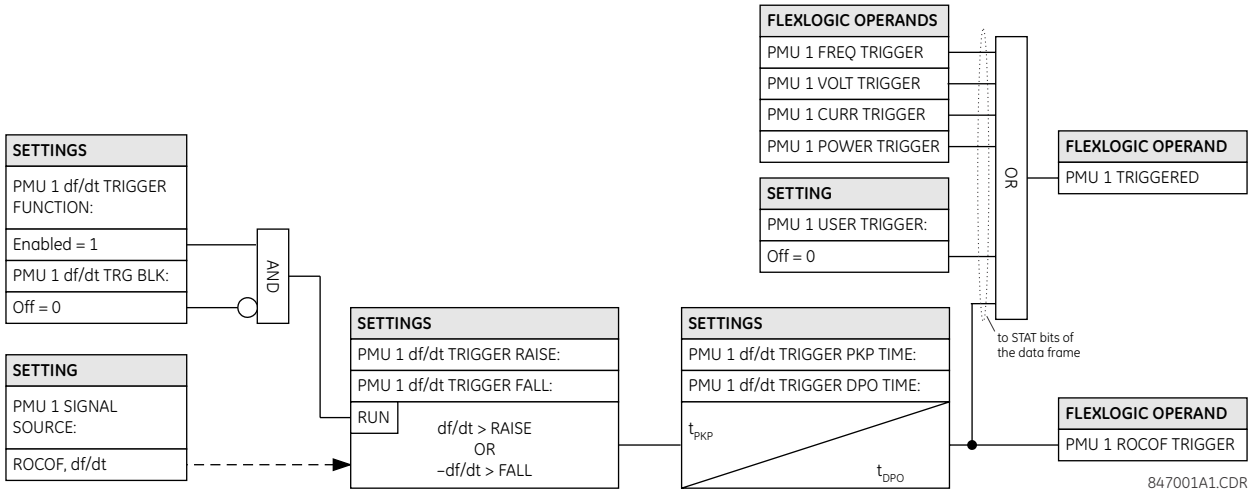

5.5.7.18 PMU recording

SETTINGS ⇨⇩ SYSTEM SETUP ⇨⇩ PHASOR MEASUREMENT UNIT ⇨⇩ PHASOR MEASUREMENT UNIT 1(6) ⇨⇩ RECORDING PMU 1(6)

■ PMU 1 ■ RECORDING	⇔	**PMU 1 FUNCTION: Disabled**	Range: Enabled, Disabled
	⇩	**PMU 1 NO OF TIMED RECORDS: 10**	Range: 2 to 128 in steps of 1
	⇩	**PMU 1 TRIGGER MODE: Automatic Overwrite**	Range: Automatic Overwrite, Protected
	⇩	**PMU 1 TIMED TRIGGER POSITION: 10%**	Range: 1 to 50% in steps of 1

The length of the PMU record is variable and depends on some settings and configuration, such as **PMU 1 NO OF TIMED RECORDS**, **PMU 1 RATE**, number of Synchrophasors, Analogs and Digitals configured in each PMU. There is a fixed amount of data storage for PMU recording; the more records captured, the less the recording length captured per record. See the **ACTUAL VALUES ⇨ RECORDS ⇨⇩ PMU RECORDS ⇨ PMU 1 RECORDING** menu to view the actual PMU record length captured per record. The following table provides sample configurations with corresponding seconds per record. The minimum number of PMU records is two. The third to fifth columns is the number of configured values recorded in each record.

Table 5-19: PMU record length example

Records	Frames per second	Synchrophasors	Analogs	Digitals	Record length (seconds)
3	30	14	8	16	590.4
16	30	14	8	16	138.9
32	30	14	8	16	71.5
64	30	14	8	16	36.3
3	60	14	8	16	295.2
16	60	14	8	16	69.4
32	60	14	8	16	35.7
64	60	14	8	16	18.1

PMU 1 FUNCTION — This setting enables or disables the recorder for PMU 1. The rate is fixed at the reporting rate set within the aggregator (that is, Aggregator 1).

PMU 1 NO OF TIMED RECORDS — Specifies the number of timed records that are available for a given logical PMU 1. The length of each record is equal to the available memory divided by the content size and number of records. As the number of records is increased, the available storage for each record is reduced. The relay supports a maximum of 128 records in either timed or forced mode.

PMU 1 TRIGGER MODE — Specifies what happens when the recorder uses its entire available memory storage. With "Automatic Overwrite," the last record is erased to facilitate new recording, when triggered. Under the "Protected" selection, the recorder stops creating new records when the entire memory is used up by the old uncleared records.

PMU 1 TIMED TRIGGER POSITION — Specifies the amount of pre-trigger data as a percent of the entire record. This setting applies only to the timed mode of recording.

5.5.7.19 Aggregators

SETTINGS ⇨⇩ SYSTEM SETUP ⇨⇩ PHASOR MEASUREMENT UNIT ⇨⇩ PMU AGGREGATOR 1(4)

■ PMU AGGREGATOR 1 ■	⇔	PMU AGGREGATOR 1 PROTOCOL: NONE	Range: NONE, 37.118, 90-5
	⇩	PMU AGGREGATOR 1 IDCODE: 1	Range: 1 to 65534 in steps of 1
	⇩	PMU AGGREGATOR 1 INCLUDE PMU1: No	Range: No, Yes
	⇩	PMU AGGREGATOR 1 INCLUDE PMU2: No	Range: No, Yes
	⇩	PMU AGGREGATOR 1 INCLUDE PMU3: No	Range: No, Yes
	⇩	PMU AGGREGATOR 1 INCLUDE PMU4: No	Range: No, Yes
	⇩	PMU AGGREGATOR 1 INCLUDE PMU5: No	Range: No, Yes
	⇩	PMU AGGREGATOR 1 INCLUDE PMU6: No	Range: No, Yes
	⇩	■ C37.118 AGGR 1 ■ CONFIGURATION	See below
	⇧	■ 90-5 AGGR 1 ■ CONFIGURATION	See below

NOTE When the protocol selection is set via the software or keypad, all aggregators whose protocol is not set to None are set to the last protocol saved (that is, IEEE C37.118 or IEC 61850-90-5) to any aggregators, as both IEEE C37.118 and IEC 61850-90-5 simultaneous streaming is not possible.

PMU AGGREGATOR1 PROTOCOL — Selects if the IEEE C37.118 or IEC 61850-90-5 technical report is used. Because one protocol is supported at a time in a device, this setting applies to all PMU aggregators.

PMU AGGREGATOR1 IDCODE — Numeric identifier of the Aggregator / PDC function. In an IEEE C37.118 output stream, this identifies the ID of the aggregator, which is only used if there is more than 1 PMU mapped into an aggregator.

PMU AGGREGATOR1 PMU1 — If set to "Yes," aggregator 1 includes the PMU1 data set in the reporting data stream. AGGREGATOR1 does not include PMU1 data set in the report if set to "No."

NOTE Only PMUs with same reporting rate can be assigned to the same PMU AGGREGATOR.

SETTINGS ⇨⇩ SYSTEM SETUP ⇨⇩ PHASOR MEASUREMENT UNIT ⇨⇩ PMU AGGREGATOR 1(4) ⇩ C37.118 AGGR 1(4) CONFIGURATION

■ C37.118 AGGR 1 ■ CONFIGURATION	⇔	PMU AGGREGATOR 1 TCP PORT: 4712	Range: 0 to 65534
	⇩	PMU AGGREGATOR 1: UDP PORT: 4713	Range: 0 to 65534
	⇧	PMU AGGREGATOR 1: PDC CONTROL: Disabled	Range: Disabled, Enabled

PMU AGGREGATOR 1 TCP PORT — Selects the TCP port number to be used by this aggregator for network reporting. All ports, even those of unused aggregators, must be valid and unique to avoid port number collisions.

PMU AGGREGATOR 1 UDP PORT — Selects the UDP port number to be used by this aggregator for network reporting. All ports, even those of unused aggregators, must be valid and unique to avoid port number collisions.

PMU AGGREGATOR 1 PDC CONTROL — The synchrophasor standard allows for user-defined controls originating at the PDC, to be executed on the PMU. The control is accomplished via an extended command frame. The relay decodes the first word of the extended field, EXTFRAME, to drive 16 dedicated FlexLogic operands. Each aggregator supports 16 FlexLogic operands, as shown in the table. The operands are asserted for five seconds following reception of the command frame. If the new command frame arrives within the five-second period, the FlexLogic operands are updated, and the five-second timer restarts. This setting enables or disables the control. When enabled, all 16 operands for each aggregator are active; when disabled, all 16 operands for each aggregator remain reset.

Table 5-20: FlexLogic operands supported by aggregator

Operand type	Operand syntax	Operand description
ELEMENT: Synchrophasor, phasor data, concentrator	AGTR1 PDC CNTRL 1	Phasor data concentrator asserts control bit 1, as received via the network
as above	AGTR1 PDC CNTRL 2	Phasor data concentrator asserts control bit 2 as received via the network
as above	AGTR1 PDC CNTRL 3	Phasor data concentrator asserts control bit 3 as received via the network
⇩		
as above	AGTR1 PDC CNTRL 16	Phasor data concentrator asserts control bit 16, as received via the network
as above	AGTR2 PDC CNTRL 1	Phasor data concentrator asserts control bit 1 as received via the network
as above	AGTR2 PDC CNTRL 2	Phasor data concentrator asserts control bit 2 as received via the network
as above	AGTR2 PDC CNTRL 3	Phasor data concentrator asserts control bit 3 as received via the network
⇩		
as above	AGTR1 PDC CNTRL 16	Phasor data concentrator asserts control bit 16, as received via the network

SETTINGS ⇨⇩ SYSTEM SETUP ⇨⇩ PHASOR MEASUREMENT UNIT ⇨⇩ PMU AGGREGATOR 1(4) ⇩ 90-5 AGGR 1(4) CONFIGURATION

■ 90-5 AGGR 1 ■ CONFIGURATION	⇔	PMU AGGREGATOR 1 NAME:	Range: 56-character ASCII text (blank by default)
	⇩	PMU AGGREGATOR 1 PORT: 1	Range: 1, 2, 3
	⇩	PMU AGGREGATOR 1 UDP PORT: 102	Range: 0 to 65534 in steps of 1
	⇧	PMU AGGREGATOR 1 NUMBER OF ASDUs: 1	Range: 1 to 4

PMU AGGREGATOR 1 NAME — A user-defined visible string of characters (maximum 56) to identify the source of the stream. This value, concatenated with the Aggregator IDCode and Aggregator Class of Service, is mapped into the IEC 61850 MSVID filed in the output stream. The field allows 65 characters, but uses the first 56 characters.

AGGREGATOR 1: PHYSICAL PORT — This setting determines the physical ports through which the synchrophasor traffic is transmitted. The range is 1, 2, 3.

PMU AGGREGATOR 1: UDP PORT — This setting selects the UDP port number that is used by this dataset for network reporting. A default setting value for IEC 6150-90-5 is provided.

PMU AGGREGATOR 1: NUMBER OF ASDUs — This setting sets the number of Application Service Data Units (ASDUs) from 1 through to 4.

Table 5-21: Number of ASDUs

Settings for ASDU	Transmission
1	ASDU at T0 (current values)
2	ASDU at T-1 (previous values) + ASDU at T0 (current values)
3	ASDU at T-2 (previous values) + ASDU at T-1 (previous values) + ASDU at T0 (current values)
4	ASDU at T-3 (previous values) + ASDU at T-2 (previous values) + ASDU at T-1 (previous values) + ASDU at T0 (current values)

5.5.7.20 Control blocks

SETTINGS ⇨⇩ SYSTEM SETUP ⇨⇩ PHASOR MEASUREMENT UNIT ⇨⇩ 90–5 R-SV CB 1(2-4) CONFIGURATION

■ 90-5 R-SV CB 1 ■ CONFIGURATION	⇔	**R-SV CB1 SVENA:** **Off**	Range: FlexLogic operand
	⇩	**R-SV CB1 CLIENT CTRL:** **Off**	Range: FlexLogic operand
	⇩	**R-SV CB1 SVENA DFLT:** **Off**	Range: FlexLogic operand
	⇩	**R-SV CB1 CONFREV:** **1**	Range: 1 to 4294967295
	⇩	**R-SV CB1 PRIORITY:** **4**	Range: 0 to 7
	⇩	**R-SV CB1 CSCP CLASS:** **Expedited Forwarding**	Range: None, Expedited Forwarding
	⇩	**R-SV CB1 VLAN ID:** **0**	Range: 0 to 4095
	⇩	**R-SV CB1 APPID:** **0**	Range: 0 to 16383
	⇩	**R-SV CB1 DEST IP:** **224.0.0.0**	Range: 0 to 255.255.255.255
	⇧	**R-SV CB1 SECURITY:** **0**	Range: 0 to 2

R-SV CB1 SVENA — The SV Stream Control is set by either toggling an assigned FlexLogic operand or a remote client write, to start and stop the streaming of R-SV frames. If remote client control is disabled, a negative response is provided to the client in response to a write attempt. A FlexLogic operand (SvEna) is provided for each Aggregator that reflects the state of the SvEna control where “1”= Enabled and “0”=Disabled. The figure shows the logic for setting the SvEna control bit.

Figure 5-106: Logic for setting SvEna control bit

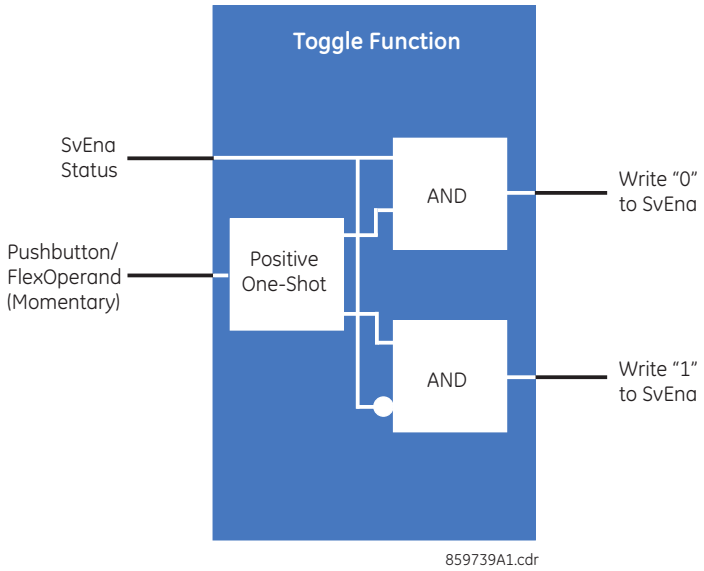

R-SV CB1 CLIENT CONTRL — This setting determines if a client can write to the reserve bit. When the assigned FlexLogic operand is a logic 1 state, remote clients can write to both the reserve bit and the SvEna bit. When the FlexLogic operand is a logic 0 state, the remote client writes to the reserve bit, the SvEna is rejected by the UR, and a negative response with the appropriate Service Error is returned to the client.

R-SV CB1 SVENA DFLT — This setting sets the default state of the stream (On or Off) on power-up or restart.

R-SV CB1 CONFREV — The relay increments the Configuration revision every time the configuration is changed. This setting allows the user to reset the configuration back to 1 or a value from 1 to 4294967295.

R-SV CB1 PRIORITY — A value from 0 through 7. The default value is 4.

R-SV CB1 DSCP CLASS — The value represents the IPv4 Differentiated Services (formerly called TypeOfService) value. The default value is set for Expedited Forwarding (101110B (46 or 2EH). This value provides priority routing, when supported in the routers.

R-SV CB1 VLAN ID — A range of values limited from 0 to 4095.

R-SV CB1 APPID — This setting allows the selection of a specific application ID for each sending device.

R-SV CB1 DEST IP — This is the destination multicast IP address that is entered in Standard IPV4 address format. The valid range for IPv4 is from 224.0.0.0 to 239.255.255.255. The UR does not test the address entered.

R-SV CB1 SECURITY — This setting selects the level of security and authentication used, as outlined in the following table, and is in the form of an enumeration as per standard. The range is 0 to 2.

NOTE

Shaded settings in the table are not supported in firmware 7.0.

Table 5-22: Security

Enumeration	Authentication	Encryption
0	No	No
1	Yes	No
2	Yes	Yes

5.6 Process bus module

This feature requires a Process Bus Module (order code 85, 86, or 87).

Process Bus GOOSE requires IEC 61850 and IEEE 1588 software options.

The UR provides a digital process bus by use of a Process Bus Module. A digital process bus enables digital transmission of data between the switchyard and relays in a control house using communication cables instead of hard-wired connections.

The Process Bus Module supports the IEC 61850-9-2LE and IEC 61869 protocols, switched networks, and two redundancy protocols (Parallel Redundancy Protocol and High-Availability Seamless Redundancy). The module is used to transfer data streams in protection and control networks, including dataset samples referred to as sampled values (SVs), with the stability of redundancy.

A Process Bus Module with order code 85, 86, or 87 is distinct from the HardFiber Process Bus Module with order code 81. This section does not apply to the HardFiber module.

Configuration includes that for redundancy and synchronization of time-clock sources because data transfer occurs among multiple devices.

NOTE

For any device that is connected to a copper SFP of the Process Bus Module, set its port speed to Auto Negotiate. The copper SFP supports 100 Mbps and 1 Gbps speeds in auto-negotiate mode. If the device connecting to the Process Bus Module has a fixed port speed, does not support auto-negotiation, or its auto-negotiate is disabled, then the link speed of the copper SFP is fixed at 1 Gbps and it communicates only with a device that supports 1 Gbps.

5.6.1 Parallel Redundancy Protocol (PRP)

PRP enables seamless switchover and zero recovery time during a single network failure in substation automation networks. It ensures that critical data, such as GOOSE and sampled value (SV) data, are transmitted without delay in case of local area network (LAN) defects. In other words, with PRP functionality, the Process Bus Module can be connected to redundant LANs and work with zero recovery time.

PRP is supported to the IEC 62439-3:2012 standard, Clause 4.

The figure shows that PRP achieves redundancy by using a combination of frame and LAN duplication. Identical frames, here labeled frames A and B, are sent on two independent networks that connect source and destination. The frames carry GOOSE or supervisory data. Under normal circumstances, both frames reach the destination and one of them is sent up the stack to the destination application, while the other frame is discarded. If an error occurs in one of the networks and traffic is prevented from flowing on that path, connectivity is provided by the other network to ensure continuous communication. When designing this network care was taken to ensure that there is no single point of failure in the two LANs, such as a common power supply, as such scenarios can bring down simultaneously both LANs.

Figure 5-107: PRP redundant network example

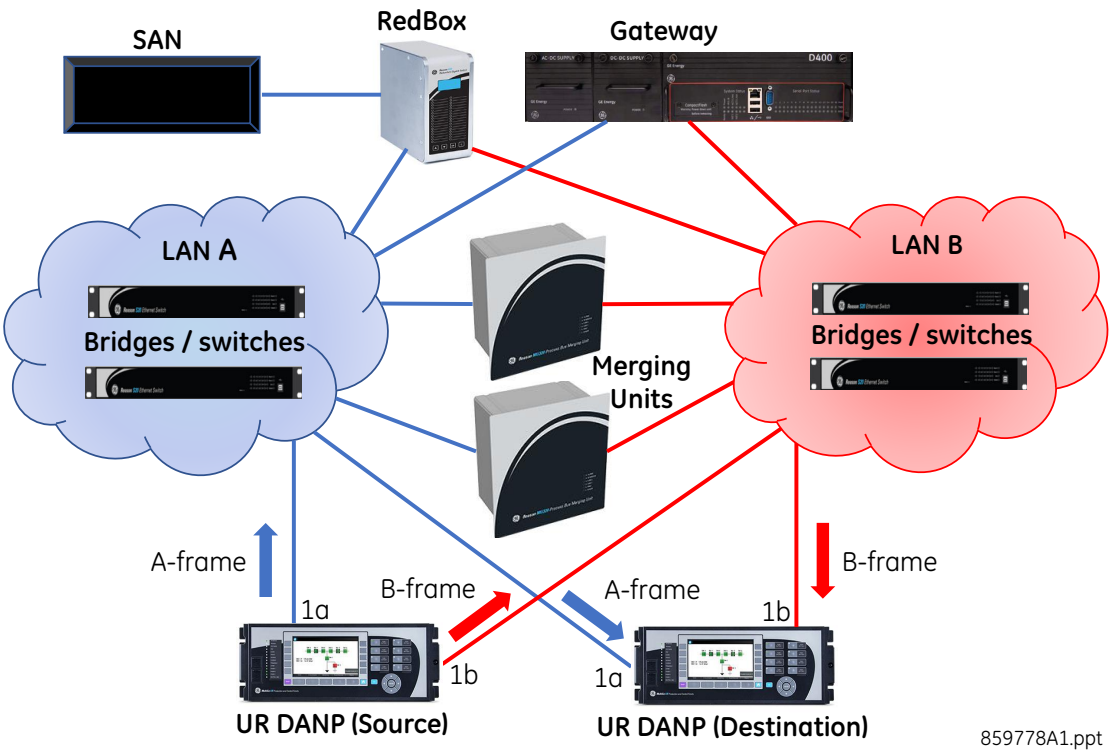

PRP implements redundancy in the nodes rather than in the network by using specialized nodes called Doubly Attached Nodes Running PRP (DANP) for handling the duplicated frames. The figure shows an example. Each DANP node has two ports that are connected to the two independent LANs with similar (but not necessarily identical) topology. A source DANP sends identical frames over both LANs and a destination DANP receives both frames from the two LANs within a certain time period, consumes the first frame, and discards the duplicate frame.

Each UR device in this example implements PRP on ports 1a and 1b of the Process Bus Module. Both URs require a Process Bus Module. Ports 1a and 1b act as DANP in the PRP network. With two ports required, Process Bus Modules with order code 85, 86, or 87 can be used. While this example shows a UR as receiving the frames, the receiver can be a merging unit or UR.

A device with only one port, such as a printer or computer, is called a Singly Attached Node (SAN). It is a node with non-redundant network adapters. A SAN can communicate with other SANs and DANPs on the same LAN. When a SAN is attached to a redundant LAN by a Redundancy Box (RedBox) device, the SAN can communicate with all DANPs and SANs in both LANs. In other words, if redundancy for a SAN is required, the SAN is connected to both LANs through a RedBox.

A merging unit (MU), such as the GE MU320, is an interface between analog and digital worlds. With an MU, the analog signals from the CTs and VTs in the yard are converted to digital signals and transmitted via the sampled value (SV) network communication protocol.

The bridges shown are network switches that connect devices participating in the PRP network and otherwise do not have an active role in PRP.

5.6.2 High-availability seamless redundancy (HSR)

Similar to PRP, High-Availability Seamless Redundancy (HSR) enables seamless switchover and zero recovery time during a single network failure in substation automation networks. It ensures that critical data, such as GOOSE and SV data, are transmitted without delay in case of LAN defects.

HSR is supported to IEC 62439-3, Clause 5. SV data can be received from merging units meeting IEC 61869-9.

HSR is used in network topology with rings and rings of rings. All nodes in the ring are doubly attached. The figure shows an example. The Doubly Attached Node with HSR (DANH) is a node that has two ports interconnected by full-duplex links and participates in the HSR ring. The source node receives a frame from its upper layer, inserts an HSR tag to identify duplicates, and sends it over its two ports in different directions, shown by the red and blue arrows. In a normal, fault-free state, the identical frames reach the destination DANH within a certain interval, the destination DANH removes the HSR tag, sends the first frame up the stack to the destination application and discards the second frame. If an error occurs in one of the network nodes and traffic cannot flow on that path, connectivity is provided through the other direction and ensures continuous communication.

Figure 5-108: HSR single-ring configuration example

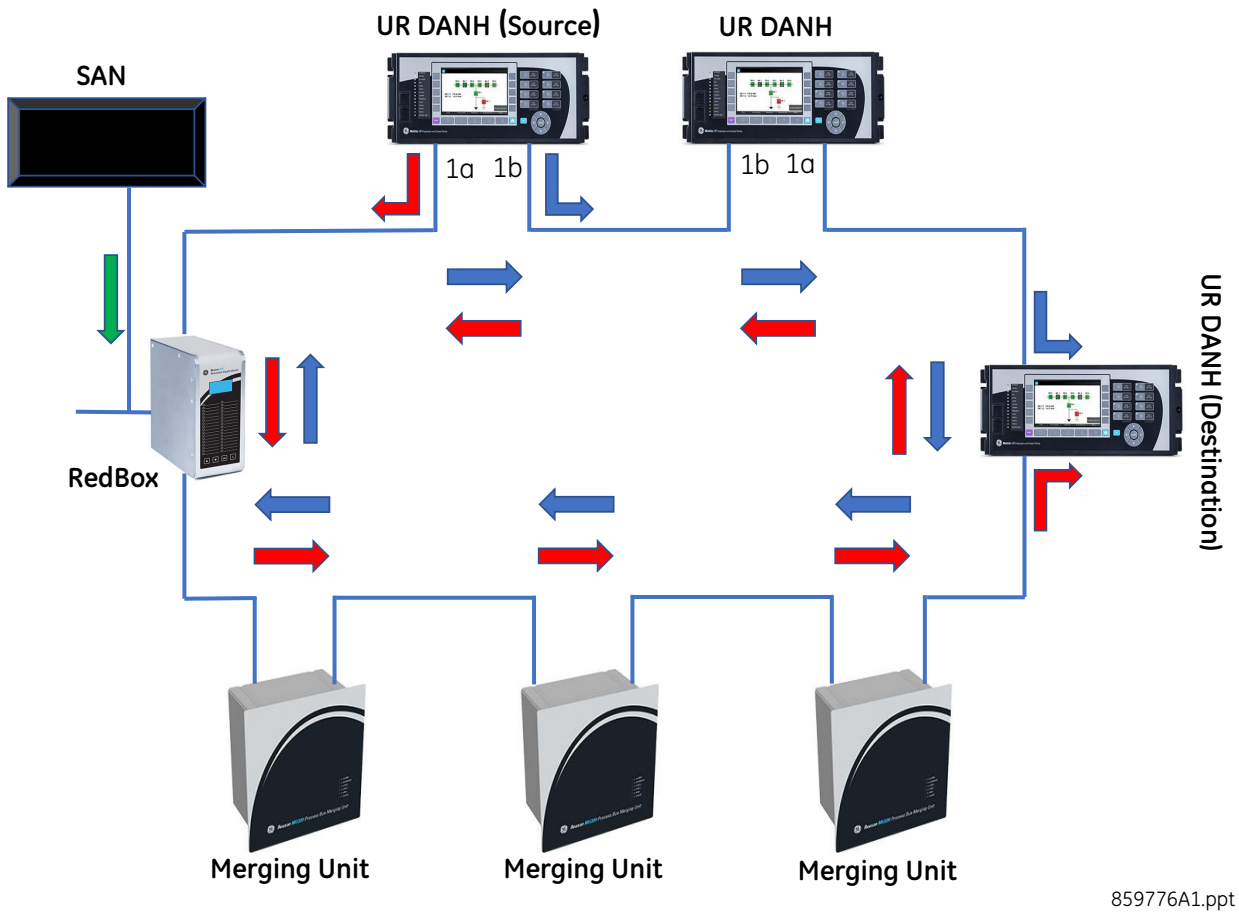

A Singly Attached Node, or SAN, such as a computer or printer, is a node with non-redundant network adapters. It uses a redundancy box (RedBox) to connect to the ring.

A merging unit (MU), such as the GE MU320, is an interface between analog and digital worlds. With an MU, the analog signals from the CTs and VTs in the yard are converted to digital signals and transmitted via the sampled value (SV) network communication protocol.

A UR with the Process Bus Module implements either single or dual HSR capability. It supports hierarchical ring topologies, such as connected rings, mesh topology, and an HSR ring in a PRP network.

In single HSR configuration, ports 1a and 1b of the Process Bus Module act as DANH, and any other ports on the Process Bus Module are disabled. Point-to-point configuration is not available. For single HSR, Process Bus Module 85, 86, or 87 can be used.

In dual HSR configuration, the UR to connect to two independent HSR rings. Ports 1a and 1b form one DANH node, and ports 3a and 3b form the second DANH node. Any other ports on the module are disabled. Traffic from HSR-1 ring is not forwarded to the HSR-2 ring and vice versa. The UR does not facilitate any message communication between the two independent HSR rings. In dual HSR, with four ports required, a Process Bus Module with order code 86 or 87 can be used.

While the UR does not provide RedBox functionality, an HSR ring can be connected to a PRP network using two RedBoxes, one for each redundant LAN of the PRP network. The RedBoxes are configured to handle PRP frames on the interlinks and HSR frames on the HSR ring. As per the IEC 62439-3:2016 standard, up to seven PRP networks can be connected to the same HSR ring.

While the UR does not provide QuadBox functionality, a QuadBox can be added to interconnect two HSR rings, which is beneficial when traffic on a single ring exceeds the ring's capability.

Figure 5-109: Dual HSR, double-ring configuration example

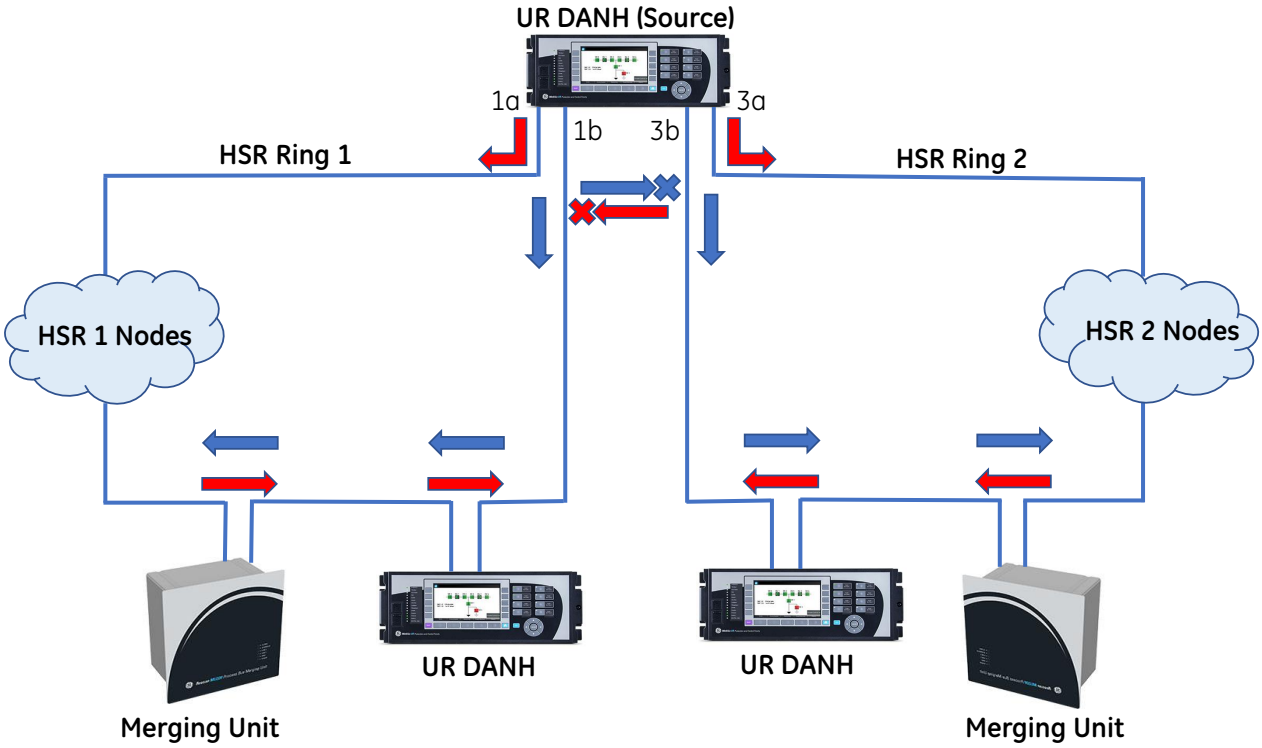

5.6.3 General

SETTINGS ⇨⇩ PROCESS BUS MODULE ⇨ GENERAL

■ GENERAL ■	⇔	NETWORK CONFIG: INDEPENDENT	Range: INDEPENDENT, PRP, HSR, Dual HSR
	⇩	PRP SUPV MCST ADDR: 01154E000100	Range: 01 15 4E 00 01 00 to 01 15 4E 00 01 FF
	⇩	HSR-1 SUPV MCST ADDR: 01154E000100	Range: 01 15 4E 00 01 00 to 01 15 4E 00 01 FF
	⇩	HSR-2 SUPV MCST ADDR: 01154E000101	Range: 01 15 4E 00 01 00 to 01 15 4E 00 01 FF

⇕	**PORT 1a FUNCTION: Enabled**	Range: Disabled, Enabled
⇕	**PORT 4b FUNCTION: Enabled**	Range: Disabled, Enabled
⇕	**SV TRBL PRT BLOCK: Global**	Range: Global, Partial
⇕	**SV TRBL CONT OP BLK: Off**	Range: FlexLogic operand
⇕	**SV DELAY ALARM: 6.0 ms**	Range: 1.0 ms to 10.0 ms in steps of 0.1 ms
⇕	**QUALITY CHECK: Reject Questionable**	Range: Reject Questionable, Accept Questionable
⇕	**ANTI-ALIASING FILTER: Disabled**	Range: Disabled, Enabled
⇕	**SMPSYNCH CHECK: Global**	Range: Global, Local, Local-87L, Any
⇕	**Fallback GmID: 00 00 00 00 00 00 00 00**	Range: 8 Octet string
⇕	**TARGET: Click to view or edit selected Targets**	Range: List of available Targets. Access in EnerVista.
⇕	**EVENTS: Click to view or edit selected Events**	Range: List of available FlexLogic operand types from SV Stream Processing. Access in EnerVista.

Restart the relay after changing these settings, under **Maintenance > Reboot Relay Command**.

NETWORK CONFIG — This setting specifies the network configuration and redundancy for the Process Bus Module.

If set to INDEPENDENT, all ports on the Process Bus Module are enabled, and the Process Bus Module can be connected directly to merging units (MUs) or to a switch without redundancy. To enable and disable individual ports on the Process Bus Module in a point-to-point (PPP) network, use the **PORT x FUNCTION** settings.

If set to PRP or HSR, ports 1a and 1b are enabled. The **PORT 1a FUNCTION** and **PORT 1b FUNCTION** settings change.

If set to Dual HSR, ports 1a and 1b are enabled for one HSR ring, and when using a Process Bus Module with order codes 86 or 87 then ports 3a and 3b are enabled for another HSR ring. The **PORT x FUNCTION** settings change.

PRP SUPV MCST ADDR — This setting changes the multicast address used by the Parallel Redundancy Protocol (PRP) supervision frames. Configure all DANP devices in the PRP network with the same multicast address for the network supervision to operate properly. This setting is editable when the **NETWORK CONFIG** setting is set to PRP.

HSR-1 SUPV MCST ADDR — This setting changes the multicast address used by High-Availability Seamless Redundancy ring one (HSR-1 ports 1a and 1b) supervision frames, for single HSR configuration. Configure all DANH devices in the HSR network with the same multicast address for the network supervision to operate properly. This setting is editable when the **NETWORK CONFIG** setting is set to HSR or Dual HSR.

HSR-2 SUPV MCST ADDR — This setting changes the multicast address used by the HSR-2 (ports 3a and 3b) supervision frames for the second DANH in a Dual HSR configuration. Configure all DANH devices in the HSR network with the same multicast address for the network supervision to operate properly. This setting is editable when the **NETWORK CONFIG** setting is set to Dual HSR.

PORT 1a to 4b FUNCTION — These settings manually enable and disable Process Bus Module Ethernet ports. Typically, Process Bus Module ports are order-code dependent, and the INDEPENDENT network configuration enables all the ports by default, changing the settings shown here. These settings allow individual ports to be enabled and disabled. For example, to connect only a few of the ports, other ports can be disabled to avoid a PBEthPort-# Offline self-test error.

The fields active depend on order code and **NETWORK CONFIG** setting. For order code 85, ports 1a, 1b, 3a, and 3b are available to be turned on or off. For order codes 86 and 87, all eight ports can be available to be turned on or off.

When a port is disabled, all transmitting and receiving traffic on the port is blocked.

Relay restart is not required when changing these port function fields.

SV TRBL PRT BLOCK — In case of loss of any subscribed SV streams or due to bad quality of any subscribed SV frames, the protection functions of the relay need to be blocked to avoid undesired operation. This setting specifies the type of blocking applied.

When set to Global, all the protection functions that utilize the sampled values are blocked. Communications, data logging, and oscillography remain functional. Availability of switchgear control is determined by the **SV TRBL CONT OP BLK** operand.

When set to Partial, only those protection functions are blocked that utilize the sampled values from the affected SV stream. All other protection functions remain operational. Communications, data logging, and oscillography remain functional. Availability of switchgear control is determined by the **SV TRBL CONT OP BLK** operand.

SV TRBL CONT OP BLK — Selects a FlexLogic operand that determines if the contact outputs are blocked or not. When the state of the operand is low, the contact outputs are not blocked when there is a loss of any SV stream or received SV frames have bad quality. The user can execute control action, thus, enabling switchgear control through contact outputs during SV stream trouble.

When the operand is high, the contact outputs are blocked when there is a loss of any SV stream or received SV frames have bad quality. The switchgear control is not available through contact outputs during SV stream trouble.

SV DELAY ALARM — The sampled value (SV) frames can arrive with a delay from the MUs, which can be due to the MU performance or different network path delays. This setting specifies the maximum delay expected between the time a sample is taken at the MU and the time of arrival of that SV message, where sampling time is estimated based on the UR Process Bus Module clock and the sampling rate. If the calculated frame delay is more than this setting value, the RxSV# Delay Alm On FlexLogic operand asserts. The setting value needs to be calibrated and set at the commissioning time for the given network topology. An alarm in runtime indicates the network performance is degrading over the time. In short, this setting specifies how long the UR waits to declare that a sample is delayed. Protection is not blocked by this setting.

5

QUALITY CHECK — Flags are used to assess quality of sampled value data to ensure protection. This setting specifies how the sampled values are processed by the UR when the associated q.validity is set to Questionable. Quality is checked per AC bank, not per SV stream.

When set to Reject Questionable, the questionable data is treated the same as Invalid and the frame is rejected. Only Good quality data is accepted.

Set it to Accept Questionable only if it is absolutely known that questionable quality from a MU is not compromising the quality of the data for various applications. When set to Accept Questionable, the Good and Questionable quality data are accepted.

ANTI-ALIASING FILTER — This setting activates or deactivates the anti-aliasing filter, which conditions the sampled values from the Process Bus network.

If Merging Unit providing sampled values is applying anti-aliasing filter, then this setting has to be set to Disabled. Otherwise, it can be set to Enabled to apply filtering for the received sampled values. When Enabled, the device applies a low-pass-filter attenuating all the harmonics above the 15th order harmonics. Refer the Product Specifications chapter for measurement accuracy for the higher harmonics.

SMPSYNCH CHECK — This setting is a time synchronization check. It specifies the time synchronization source of an SV stream (SmpSynch attribute value in an SV message header) expected by the UR Process Bus Module.

When set to “Global”, only the SV streams with **SmpSynch** indicating a Global (2) value are accepted. A stream with a SmpSynch value other than Global (2) is rejected.

When set to “Local” or “Local-87L”, all SV streams with **SmpSynch** indicating a Local (1) or Global (2) area clock are accepted.

When set to “Any”, any **SmpSynch** value in the range of 0 to 254 is acceptable (0 to 127 for UR 7.80), and streams outside the range are rejected.

NOTE

When all the subscribed MU streams support IEC61850 Ed 2.1, an additional acceptance criterion as outlined in the description of setting **Fallback GmID**, has been added from UR version 8.5 and onwards.

Fallback GmID:

Range: 8 Octet string

Default: 00 00 00 00 00 00 00 00

From UR version 8.5, along with SmpSynch attribute, SynchSrcID attribute published in the RxSV streams supporting IEC61850 Ed 2.1 is used as acceptance criteria for the RxSV streams to be used by the Protection elements.

In the absence of Global Clock, this setting indicates the GmID of the local clock to which all subscribed MUs have to be synchronized for RxSV streams to be accepted. The effect of the Fallback GmID is explained as below:

- "When SMPSYNCH CHECK is set to "Global", only the RxSV streams with SmpSynch attribute indicating a Global (2) value are accepted. SynchSrcID(GmID) Check is not done as all the streams accepted are Globally synchronized.
- "When SMPSYNCH CHECK is set to "LocaL" only the SV streams with SmpSynch attribute value of Global (2) or Local(1) are accepted. Here three different use case scenarios arise and the RxSV stream acceptance is as given below:
  - 1) All streams have SmpSynch attribute value of Global(2): All RxSVs are accepted by SmpSynch Check setting. GmID Check is not done as all streams are Global.
  - 2) All streams SmpSynch attribute value of Local(1): All RxSVs are accepted by SmpSynch Check setting. From the above accepted RxSVs, only the RxSVs streams whose GmID matches 'Fall-back GmID' are accepted. If 'Fall-back GmID' is '00 00 ...' then the RxSVs streams whose GmID matches with the GmID of one of the subscribed RxSV stream as reference, will only be accepted.
  - 3) Mix of streams with SmpSynch attribute value of Global and Local : RxSV streams with SmpSync attribute values of Global and Local only are accepted by SmpSynch Check setting. From the above streams, only the RxSV streams with SmpSync attribute value of Global will remain valid and the RxSV streams with SmpSync attribute value of Local will be rejected. SynchSrcID(GmID) Check is not done as all the valid streams are Global.
- When SMPSYNCH CHECK is set to **Any**, RxSV streams with SmpSynch attribute values of Global (2) or Local(1) or No Sync(0) are accepted. All RxSVs are accepted by SmpSynch Check setting. SynchSrcID(GmID) Check is not done as user expects all RxSVs to be accepted.
-

Figure 5-110: SympSynchCheck with GmID Flowchart

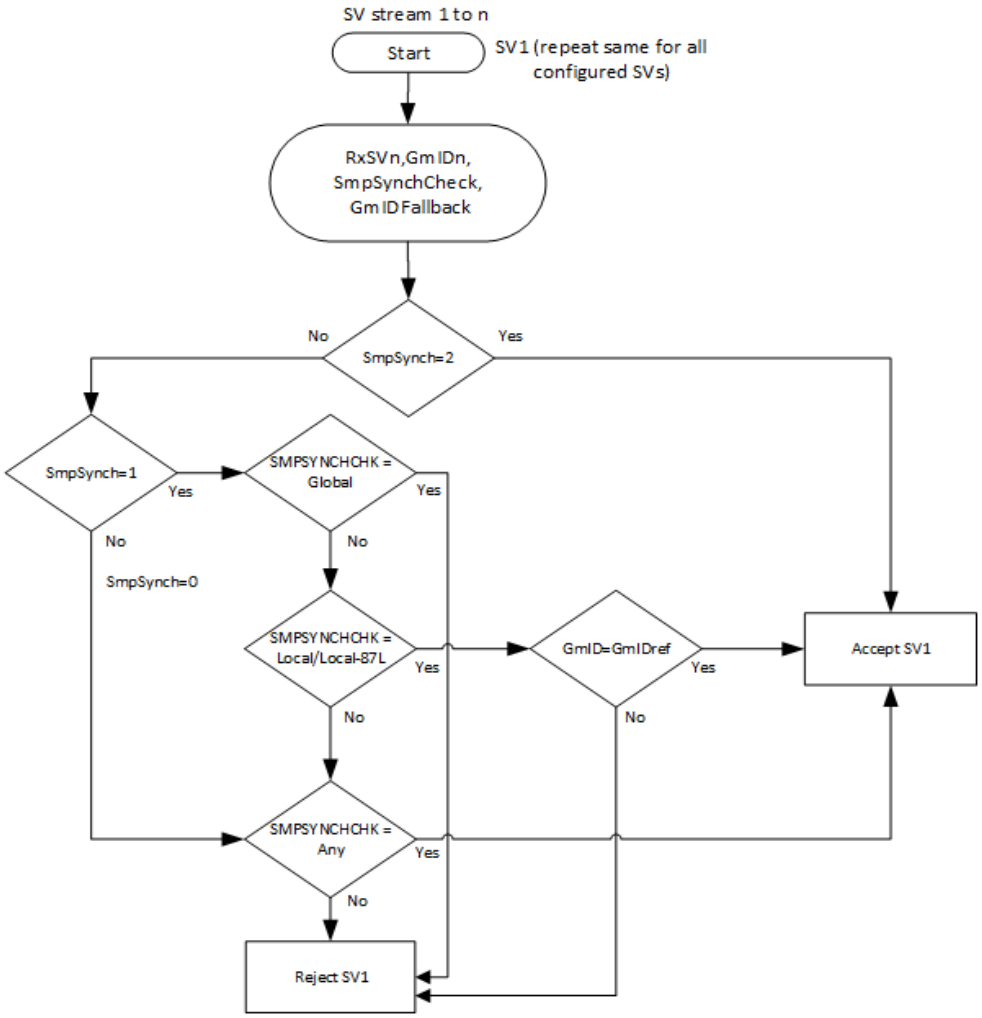

Table 5-23: Effect of SMPSYNCH CHECK setting and attribute

MU Smpsynch Attribute	UR Setting: SMPSYNCH CHECK		
	Global	Local	Any
Global	Protection elements operational	Protection elements operational	Protection elements operational
Local	Protection elements blocked	Protection elements operational if GmId=GmIDRef	Protection elements operational
Any	Protection elements blocked	Protection elements blocked	Other protection elements operational

NOTE

TARGET — This setting is available in the EnerVista software, where the user can select the target messages of the affected SV stream(s) to be displayed on the front panel. The target gets self-reset once the issue with the SV stream is resolved. Note that a selected target message applies to all the configured SV streams. For example, if target message 'RxSV DELAY ALM ON' is selected, then a target displays when any of the configured SV streams has an active SV Delay Alarm. When set to Disabled, no target message displays on the front panel.

Figure 5-111: FlexLogic operand target selection

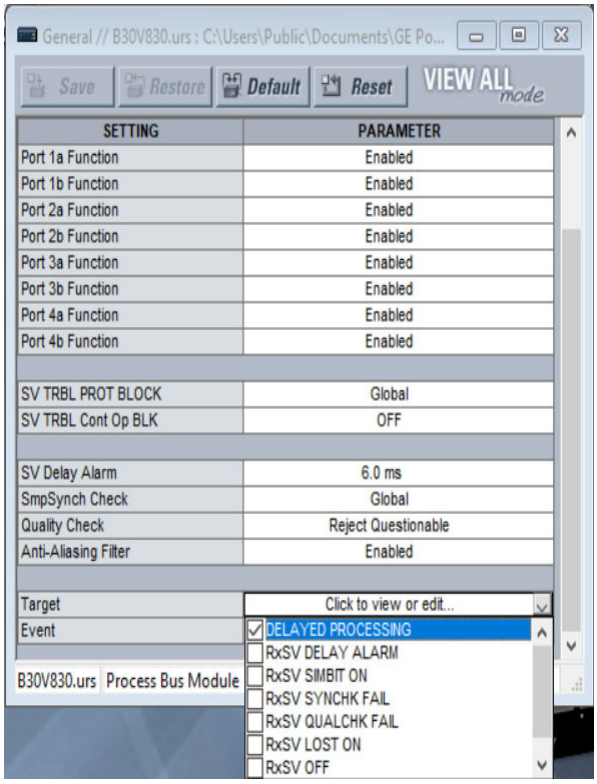

EVENTS — This setting is available in the EnerVista software, where user can select the flexlogic operands which will generate the events of the affected SV stream(s), to be recorded in the event recorder. Note that a selected event from the menu applies to all the configured SV streams. When set to Disabled, no event is recorded in the event recorder.

Figure 5-112: FlexLogic operand event selection

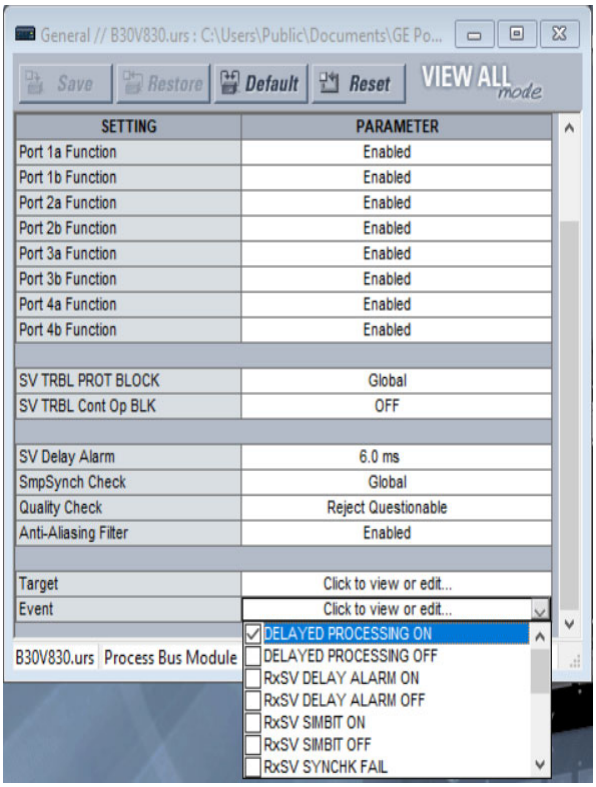

5

NOTE

Choose carefully the events to be recorded in the event recorder. If an SV stream is noisy, there is risk of event recorder overflow. Apart from testing, select a minimal number of events following relay commissioning.

5.6.4 SV Stream Config

The UR platform can subscribe up to eight sampled value (SV) streams. Up to six banks and up to six sources can be used for protection.

Reception of a sampled value (RxSV) can be enabled in the IEC 61850-9-2LE or IEC 61869-9/13 format.

These settings are available in the software only. They also can be configured in the software using a CID file.

The path is **Settings > Process Bus Module > SV Stream Config**. If a message displays that the data cannot be opened, it can mean that access timed out; try again.

Figure 5-113: Example of sampled values configuration

SV Stream Config // Paul's: R38: Settings: Process Bus Module

Save | Restore | Default | Reset | Show Enabled | Show Custom Layout | VIEW ALL mode

SV MESSAGES

Common Setting					
RxSV Format	IEC 61850-9-2LE r2-1				
RxSV Streams	**RxSV1**	**RxSV2**	**RxSV3**	**RxSV4**	**RxSV5**
SV Stream	Disabled	Disabled	Disabled	Disabled	Disabled
svID					
Dst MAC	01-0C-CD-04-00-00	01-0C-CD-04-00-00	01-0C-CD-04-00-00	01-0C-CD-04-00-00	01-0C-CD-04-00-00
ConfRev	0	0	0	0	0
Force MU Out Of Service	OFF	OFF	OFF	OFF	OFF
Stream Status	-NA-	-NA-	-NA-	-NA-	-NA-
Advanced Config					
MU SCL Import	Import	Import	Import	Import	Import
SvCBRef					
CT Channels	4	4	4	4	4
VT Channels	4	4	4	4	4
ASDUs	1	1	1	1	1
Variant Code					
CT1-A	AC1	AC1	AC1	AC1	AC1
CT1-B	AC2	AC2	AC2	AC2	AC2
CT1-C	AC3	AC3	AC3	AC3	AC3
CT1-N	AC4	AC4	AC4	AC4	AC4
CT2-A	None	None	None	None	None
CT2-B	None	None	None	None	None
CT2-C	None	None	None	None	None
CT2-N	None	None	None	None	None
VT1-A	AC5	AC5	AC5	AC5	AC5

AC BANKS

AC BANKS	B1	B2	B3	B4	B5
Phase Origin 1	None	None	None	None	None
Phase Origin 2	None	None	None	None	None
Neutral Origin 1	None	None	None	None	None
Neutral Origin 2	None	None	None	None	None

SIGNAL SOURCES

PLATFORM	SOURCE1	SOURCE2	SOURCE3	SOURCE4
Name	SRC 1	SRC 2	SRC 3	SRC 4
Phase CT	None	None	None	None
Ground CT	None	None	None	None
Phase VT	None	None	None	None
Aux VT	None	None	None	None
Alternate Banks				
Alt Phase CT	None	None	None	None
Alt Ground CT	None	None	None	None
Switch Alt CT	OFF	OFF	OFF	OFF
Alt Phase VT	None	None	None	None
Alt Aux VT	None	None	None	None

The configuration window is explained as follows:

- The four areas of the window (Common Setting, RxSV Streams, Advanced Config, AC Banks, and Sources) collapse and expand by clicking their buttons
- A column collapses and expands by clicking its heading
- The **Show Enabled** button toggles active/configured content
- The **Show Custom Layout** button toggles changes made to formatting, such as column width. Such changes can be made with or without the button active, and they are retained when the panel is closed.
- There are up to eight RxSV, eight AC Bank, and six Source columns. A B30 can have up to 24 RxSV, 30 AC Bank (24 CT and six VT), and 30 Source columns.
- With IEC 61869-9, the Advanced Config fields populate and are read-only when importing a file
- Rules are enforced and the configuration cannot be saved until the rules are followed. For example, Neutral Origin 1 and Neutral Origin 2 cannot be mapped to the same SV stream. See the troubleshooting section that follows.

- The window is configured based on the separate areas and not based on columns. For example, stream RxSV1 is configured in the SV Messages area of the window, not the first column in the entire window. Or for example, Source1 in the first column can be configured to use AC Bank B2 in the second column.
- The following example shows that Source1 at the bottom of the window is set to map to AC Bank B2, which is mapped to the first stream (RxSV1) and its available VT1 phase voltage and VT2 neutral voltage.

Figure 5-114: Understanding SV configuration

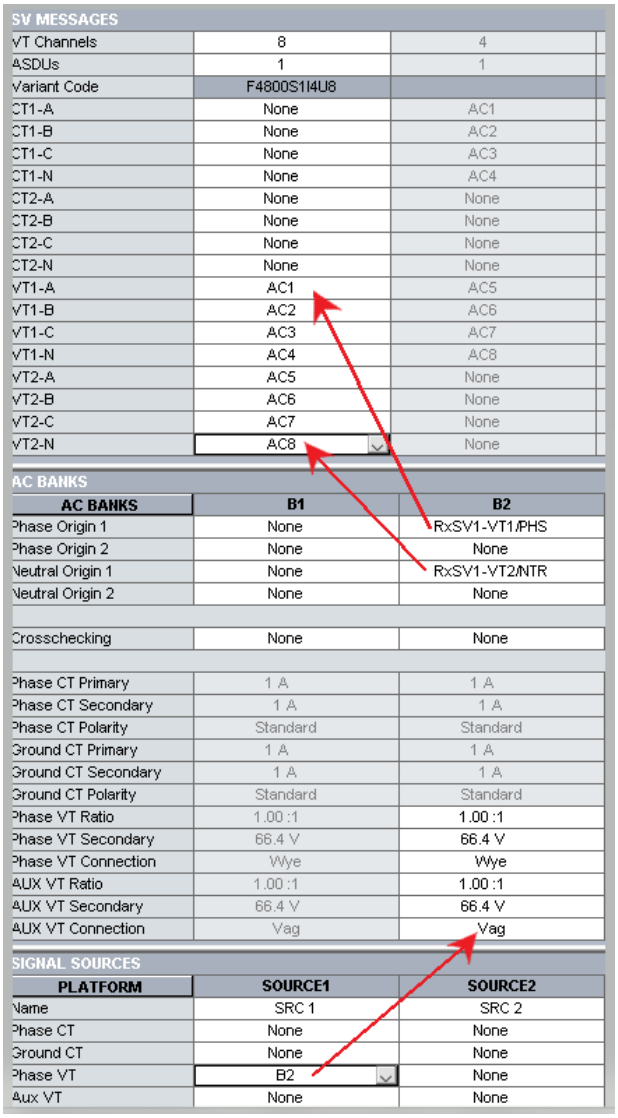

SV MESSAGES		
VT Channels	8	4
ASDUs	1	1
Variant Code	F4800S1I4U8	
CT1-A	None	AC1
CT1-B	None	AC2
CT1-C	None	AC3
CT1-N	None	AC4
CT2-A	None	None
CT2-B	None	None
CT2-C	None	None
CT2-N	None	None
VT1-A	AC1	AC5
VT1-B	AC2	AC6
VT1-C	AC3	AC7
VT1-N	AC4	AC8
VT2-A	AC5	None
VT2-B	AC6	None
VT2-C	AC7	None
VT2-N	AC8	None

AC BANKS		
AC BANKS	**B1**	**B2**
Phase Origin 1	None	RxSV1-VT1/PHS
Phase Origin 2	None	None
Neutral Origin 1	None	RxSV1-VT2/NTR
Neutral Origin 2	None	None
Crosschecking	None	None
Phase CT Primary	1 A	1 A
Phase CT Secondary	1 A	1 A
Phase CT Polarity	Standard	Standard
Ground CT Primary	1 A	1 A
Ground CT Secondary	1 A	1 A
Ground CT Polarity	Standard	Standard
Phase VT Ratio	1.00 :1	1.00 :1
Phase VT Secondary	66.4 V	66.4 V
Phase VT Connection	Wye	Wye
AUX VT Ratio	1.00 :1	1.00 :1
AUX VT Secondary	66.4 V	66.4 V
AUX VT Connection	Vag	Vag

SIGNAL SOURCES		
PLATFORM	**SOURCE1**	**SOURCE2**
Name	SRC 1	SRC 2
Phase CT	None	None
Ground CT	None	None
Phase VT	B2	None
Aux VT	None	None

- The UR allows switching AC banks (essentially streams) from the main measuring MU to the alternate measuring MU. Once an operand assigned to the **SWITCH ALT CT/VT** setting is logical "1," the input data to this source is switched from the banks assigned to PHASE CT/GROUND CT to the banks assigned to ALT PHASE CT/ALT GROUND CT settings for current transformers. This is similar for voltage transformers.
- Banks assigned to the same function for the main and alternate input data have to have the same CT and VT nominals and connections, otherwise a warning is generated and switching functionality is prohibited. For example, banks assigned to the PHASE CT and ALT PHASE CT have to have same primary and secondary CT values.
- During switching from the main CT/VT input data to alternate input data and vice versa, all relay functions are blocked for two power cycles and metering data does not update
- See the Source Switching section under **SETTINGS > SYSTEM SETUP > SIGNAL SOURCES** in this manual for application examples of AC bank switching

An example of the configuration process is as follows:

1. Configure SV streams by importing an MU CID file. This populates the SV Messages area of the window.
2. Configure the Sources fields.
3. Map the AC Bank fields to the RxSV Stream fields.
4. Troubleshoot using the messages displayed during configuration and/or upon save so that the rules are followed. Saving frequently during configuration helps to deal with issues early.
5. Restart the relay for the changes to take effect.

The table outlines mapping examples using CT channels. VT channels are similar.

Table 5-24: CT configuration mapping examples

Scenario	AC Bank configuration	Advanced Config configuration
No CT signal in the SV stream	---	---
One neutral	Neutral Origin 1 = RxSV1-CT1/NTR	CT1-N maps to AC1
Two neutrals	Neutral Origin 1 = RxSV1-CT1/NTR Neutral Origin 2 = RxSV2-CT2/NTR	CT1-N maps to AC1 CT2-N maps to AC2
Three phases	Phase Origin 1 = RxSV1-CT1/PHS	CT1-A, B, C map to AC1, 2, 3
Three phases followed by one neutral	Phase Origin 1 = RxSV1-CT1/PHS Neutral Origin 1 = RxSV1-CT1/NTR	CT1-A, B, C, N map to AC1, 2, 3, 4
One neutral followed by three phases	Neutral Origin 1 = RxSV1-CT1/NTR Phase Origin 1 = RxSV1-CT2/PHS	CT1-N maps to AC1 CT2-A, B, C map to AC2, 3, 4
One neutral followed by three phases, then followed by one neutral	Neutral Origin 1 = RxSV1-CT1/NTR Phase Origin 1 = RxSV1-CT2/PHS Neutral Origin 2 = RxSV2-CT2/NTR	CT1-N maps to AC1 CT2-A, B, C, N map to AC2, 3, 4, 5
Three phases followed by one neutral, then another neutral	Phase Origin 1 = RxSV1-CT1/PHS Neutral Origin 1 = RxSV1-CT1/NTR Neutral Origin 2 = RxSV2-CT2/NTR	CT1-A, B, C, N map to AC1, 2, 3, 4 CT2-N maps to AC5
Two three-phases	Phase Origin 1 = RxSV1-CT1/PHS Phase Origin 2 = RxSV2-CT2/PHS	CT1-A, B, C map to AC1, 2, 3 CT2-A, B, C map to AC4, 5, 6
Three phases followed by one neutral, then another three phases	Phase Origin 1 = RxSV1-CT1/PHS Neutral Origin 1 = RxSV1-CT1/NTR Phase Origin 2 = RxSV2-CT2/PHS	CT1-A, B, C, N map to AC1, 2, 3, 4 CT2-A, B, C map to AC5, 6, 7
Three phases followed by another three phases, then one neutral	Phase Origin 1 = RxSV1-CT1/PHS Phase Origin 2 = RxSV2-CT2/PHS Neutral Origin 2 = RxSV2-CT2/NTR	CT1-A, B, C map to AC1, 2, 3 CT2-A, B, C, N map to AC4, 5, 6, 7
Three phases, one neutral, then another three phases and one neutral. See the following figure.	Phase Origin 1 = RxSV1-CT1/PHS Neutral Origin 1 = RxSV1-CT1/NTR Phase Origin 2 = RxSV2-CT2/PHS Neutral Origin 2 = RxSV2-CT2/NTR	CT1-A, B, C, N map to AC1, 2, 3, 4 CT2-A, B, C, N map to AC5, 6, 7, 8

Figure 5-115: Example three phases, one neutral, then three phases and one neutral

SV MESSAGES		
Common Setting		
RxSV Format	IEC 61869-9 ed1.0	
RxSV Streams	**RxSV1**	**RxSV2**
SV Stream	Enabled	Enabled
svID		
Dst MAC	01-0C-CD-04-00-00	01-0C-CD-04-00-00
ConfRev	0	0
Force MU Out Of Service	OFF	OFF
Stream Status	-NA-	-NA-
Advanced Config		
MU SCL Import	Import	Import
SvCBRef		
CT Channels	4	8
VT Channels	4	4
ASDUs	1	1
Variant Code	F4800S1I4U4	F4800S1I8U4
CT1-A	AC1	AC1
CT1-B	AC2	AC2
CT1-C	AC3	AC3
CT1-N	AC4	AC4
CT2-A	None	AC5
CT2-B	None	AC6
CT2-C	None	AC7
CT2-N	None	AC8
VT1-A	AC5	AC9
VT1-B	AC6	AC10
VT1-C	AC7	AC11
VT1-N	AC8	AC12
VT2-A	None	None
VT2-B	None	None
VT2-C	None	None

AC BANKS		
AC BANKS	**B1**	**B2**
Phase Origin 1	RxSV1-CT1/PHS	None
Phase Origin 2	RxSV2-CT1/PHS	None
Neutral Origin 1	RxSV1-CT1/NTR	None
Neutral Origin 2	RxSV2-CT2/NTR	None
Crosschecking	None	None

5.6.4.1 Logic

The logic diagram follows.

Figure 5-116: SV stream logic diagram

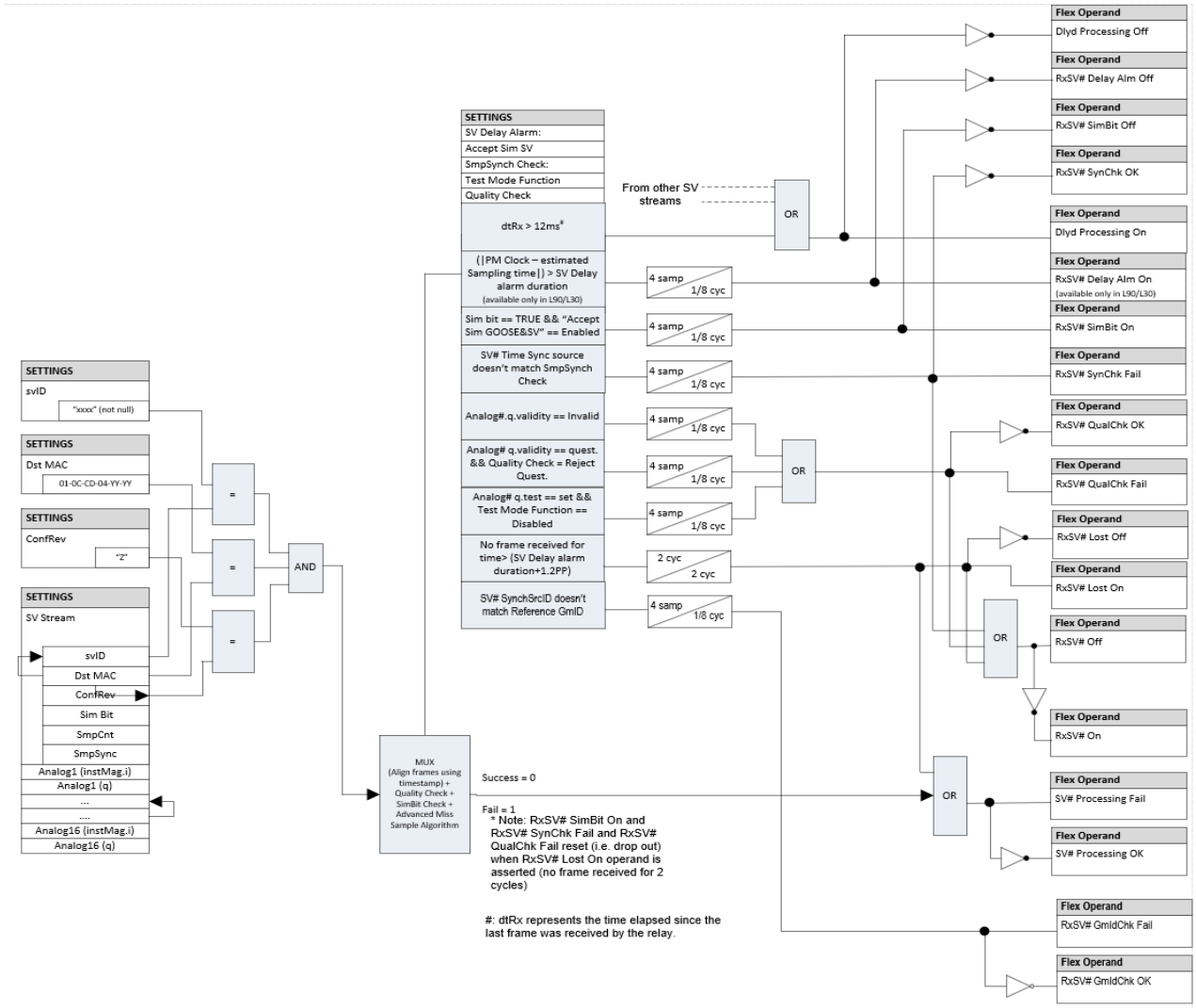

SV streams are accepted based on the following settings that need to match the MU:

- SmpSynch Check — Time synchronization check as outlined earlier in the General section
- Quality Check — Outlined earlier
- svID — Multicast Sampled Value Identification of a stream
- Dst MAC — Destination Media Access Control address in the header of the SV message
- ConfRev — When the configuration revision is non-zero, the UR accepts the frame when it matches its configured value

NOTE

The relay decodes an SV stream when the DstMAC attribute of the injected SV stream matches any of the configured SV stream subscriptions.

Each qualified SV stream (that is, with matching svID, Dst MAC, and ConfRev) that is mapped to any of the AC Banks is checked for the SV delay, matching Sim bit, time synchronization source, and quality checks.

When four samples in 1/8th of power cycle duration fail any of these checks, a corresponding FlexLogic operand is asserted, with a drop-out timer of one protection pass. The drop-out timer is retriggered each time that the check fails.

The RxSV# Lost FlexLogic operand is set when consecutive 160 samples (two cycles) are lost following the assertion of **SV DELAY ALARM**. The time accuracy for the assertion of this operand can be up to two protection passes.

The RxSV# Off FlexLogic operand is set when the "Miss Sample Algorithm" fails (for example, due to temporary loss of stream or stream rejected due to any condition check failure) or the stream is lost, with a drop-out time of 17 protection passes. Every "Miss Sample Algorithm" fail condition for that RxSV# stream retriggers the drop-out timer for the RxSV# Off operand.

5.6.4.2 Message troubleshooting

Examples for messages displayed are as follows:

- The SvID attribute of RxSV1 is empty — Type a name for the stream in the svID field
- The number of channels being selected for CT2-N...exceed the total allowable 7 CT channels — Set the CT2-N field to None, or increase the CT Channels field to 8
- The number of channels being selected for CT inputs...exceeds the total allowable 4 CT channels — The CT Channels field is set at 4 and there are entries in the CT2-A/B/C/N fields. Set the latter fields to None or increase the number of channels.
- The selected 'RxSV3' stream is disabled. Configure stream before assigning to AC Bank Phase Origin — Enable the RxSV3 stream in its SV Stream field
- The AC Bank 2 assigned to Source 1 is not configured — B2 is set in a Source1 field at the bottom of the window. In the AC BANKS area of the window, go to the B2 column, and set one of the fields.
- The AC Bank 2 is a Voltage channel and is assigned to Phase CT of Source 1 — In the Source area of the window, change the B2 assignment from Phase CT to VT
- The AC Bank x assigned...is not configured.., — Configure the AC Banks section in the software window before setting the field
- The CT channels set of the selected 'RxSV1-CT1' are not configured — In the Advanced Config section, set the CT fields

5

5.6.4.3 SV quality processing

- Any degradation in the measurement or sampled value data of the merging unit inhibits the protection functions of the IED. IEC 61850 assigns quality attributes to each sampled value channel, to identify the data validity. The UR Process Bus Module interface uses the quality flags of subscribed analog channels to enable or inhibit the protection functions
- Quality is checked per channel in an ASDU/frame. For example, if A-phase current has invalid quality, but other current channels have good quality, the frames with good quality are still accepted and values are displayed in the metering. However, if any channel in the AC Bank has invalid quality, protection functions using this AC bank are blocked until all four channels have good quality.
- For protection functions to work correctly, q.validity needs to be good. Samples with invalid quality can result in unacceptable behavior from the protection functions. An SV analog quantity with q.validity = invalid is ignored.
- When "Quality Check" is set to 'Accept questionable' data, the data with q.validity = questionable is valid. When "Quality Check" is set to 'Reject questionable' data, the data with q.validity = questionable is ignored.
- When the relay is in-service, or test function is Disabled, the data with q.test set to TRUE is processed as invalid
- When the relay test function is forced or isolated, the data with q.test set to TRUE and q.test set to FALSE is valid.
- If any channel value within a sampled value stream is rejected due to a quality check, the device sets a FlexLogic operand "RxSV# QualChk Fail" for the duration of the quality check failure.

5.6.4.4 SV simulation processing

When received SV frames have Sim Bit TRUE, the frame is ignored unless the value of @Master/LPHD1.Sim.stVal is true (@Master/LPHD1.Sim.stVal is true when **Settings > Simulation > Subscribe to Simulated Values > Simulation Mode** is Enabled). When @Master/LPHD1.Sim.stVal is TRUE

- Once subscribed SV messages with simulation bit TRUE are accepted, subscribed SV messages with simulation bit FALSE are ignored and the received SV messages with the simulation bit TRUE are used in place of the actual SV messages until @Master/LPHD1.Sim.stVal is set to FALSE

- When a SV frame is received with simulation bit TRUE, the FlexLogic operand for the corresponding stream is set as RxSV# SimBit On. After the latest change in simulation bit as recorded by the "Latest Sim Bit Change" time stamp, the relay takes 4 to 8 msec to process and assert the RxSV# SimBit On FlexLogic operand.
- If SV messages with simulation bit TRUE are not received, the RxSv# continues to use the actual SV frames
- When the value of @Master/LPHD1.Sim.stVal changes from TRUE to FALSE
  - Subscribed SV messages with simulation bit TRUE are ignored immediately after this change
  - Only subscribed SV messages with simulation bit FALSE are accepted

5.6.4.5 Settings

The following settings are available.

RxSV Format

Range: IEC 61850-9-2LE r2-1, IEC 61869-9 ed1.0
Default: IEC 61850-9-2LE r2-1

This setting selects the SV frame format, or protocol.

When set to “IEC 61850-9-2LE r2-1”, the IED assumes that the received SV frame references datasets that comply with IEC 61850-9-2LE, Table 6: Dataset (PhsMeas1). The IED must be configured with a system frequency of 50 or 60 Hz for correct operation.

When set to “IEC 61869-9 ed1.0”, the IED assumes that the dataset rules comply with IEC 61869-9 ed1.0 and that the number of Application-layer Service Data Units (ASDUs) are user-configurable.

NOTE

When a file using a single SV stream (either IEC 61850-9-2LE r2-1 or IEC 61869-9 ed1.0) is converted from firmware version 8.2x and below to firmware versions 8.3x and above, the conversion will complete with no errors and the **RxSV Format** setting will have the same value as the original file.
If there is a mix of SV streams in the original file, then the user will be notified of this error and all configured SV streams will be set to the **SV Stream** default; “Disabled”. The **RxSV Format** setting will also default to “IEC 61850-9-2LE r2-1”.

5

SV Stream

Range: Disabled, Enabled
Default: Disabled

This setting enables an SV stream. When set to “Disabled”, all other RxSV# settings are not editable and set to default.

svID

Range: 1 up to 129 Visible String characters
Default: empty string

svID refers to the name of the sampled value packet. The svID field of incoming SV messages must exactly match this value for the message to be accepted as a valid RxSV# message. The svID field of the sampled value frame must be unique within the system/substation.

Dst MAC

Range: any valid multicast MAC (12-digit hexadecimal number)
Default: 01-0C-CD-04-00-00

Only received SV messages having a destination Media Access Control (MAC) address equal to this value are accepted as valid RxSV# messages. Each address must be unique.

The destination MAC increases the overall performance of multicast message reception by filtering only the configured messages for processing. For a received SV message, the Dst MAC is validated if it matches with any of the configured RxSV# Dst MAC. If validation is successful, the message is forwarded for further checks. There is no explicit check for the configured Dst MAC versus the SvID for a received SV message.

ConfRev

Range: 0 to 2147483647 in steps of 1

Default: 0

ConfRev refers to configuration revision, which is a count of configuration changes in the SV control block. If the value entered here is non-zero, the ConfRev field of incoming SV messages must match this value for the message to be accepted as a valid RxSV# message. If the setting is zero, RxSV# does not check the value received in the ConfRev field.

Force MU Out of Service

Range: FlexLogic operand

Default: Off

This setting is intended specifically for forcing a faulty Merging Unit (MU) out of service in applications where a circuit can be energized from more than one side, such as breaker and a half application, and the redundancy at MU level is not available. For such application current from both sides are summed up using UR source mechanism and if one MU fails, it will block all protection functions from using this source.

Figure 5-117: Forcing MU1 out of service for a Breaker-and-a-half configuration

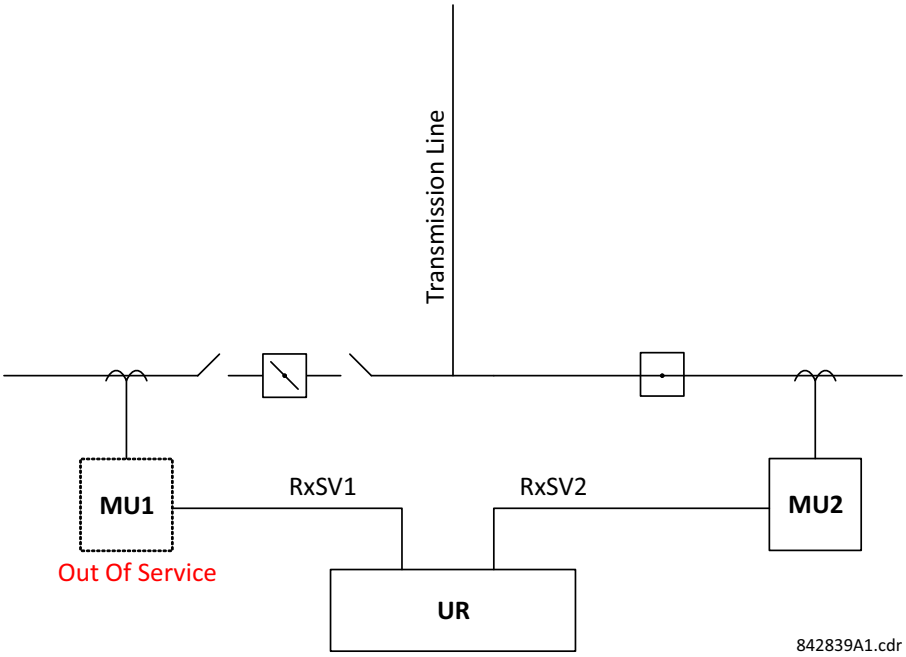

For example, in the above figure it is possible to open Breaker1 and still keep the system energized through Breaker 2. The setting **FORCE MU OUT OF SERVICE** allows MU1to be taken out of service while keeping the protection and control elements operational by using the RxSV stream from MU2 only. If redundancy is available at MU level, then the protection can be kept operational without using setting **FORCE MU OUT OF SERVICE**, through the Cross-checking functionality. Please refer to the description of settings **CROSS-CHECKING, PHASE ORIGIN 1, 2** and **NEUTRAL ORIGIN 1, 2** for more details.

To put an MU out of service, the corresponding breaker has to be opened before asserting the FlexLogic selected in the setting **FORCE MU OUT OF SERVICE** to the "ON" state. The MU can now be disconnected for troubleshooting purposes. The current channels from the affected MU will be treated as "online" with sampled current values forced to ZEROs. The protection using respective source remains operational based on the current values sent by the other MU which is located on the closed breaker side.

It should be noted that:

- Keeping RxSV online (with current substituted as ZEROs) is applicable to current channels only. The status of voltage channels will become "Offline", and the protection elements will get blocked according to the setting **SV TRBL PRT BLOCK**.
- The FlexLogic operands on the SV Config logic show the actual state of the affected the RxSV stream (i.e., RxSV# Off/On), irrespective of setting **FORCE MU OUT OF SERVICE** being "Off" or "On".

NOTE

The user must ensure that the primary circuit to which the affected MU is connected remains de-energized for the entire duration of forcing MU out of service, otherwise the protection elements will mal-operate. The circuit should be de-energized before changing the setting **FORCE MU OUT OF SERVICE** to "On". The circuit should be energized only after the setting **FORCE MU OUT OF SERVICE** is set to "Off".

SV stream processing FlexLogic operands must not be used to automate **FORCE MU OUT OF SERVICE**. It is strongly recommended that **FORCE MU OUT OF SERVICE** is manually controlled (for example, through a pushbutton, contact input, virtual input, or GOOSE).

The setting **FORCE MU OUT OF SERVICE** is intended for applications where a breaker can be opened, and the corresponding MU can be taken out of service while the circuit is energized through another breaker such as in breaker-and-a-half application. For any other application, the use of this setting should be carefully evaluated.

Application of the setting **FORCE MU OUT OF SERVICE** together with cross-checking function is not recommended.

Stream Status

This is an LED status indicator for the reception of an SV stream (RxSV#).

A green LED reflects the RxSV# On FlexLogic operand, meaning that the SV stream is online.

A red LED reflects the RxSV# Off FlexLogic operand, meaning that the SV stream is offline.

When the EnerVista UR Setup software is not online or the stream is disabled, the LED is grayed-out with Not Available, or "-NA-" status.

Advanced Configuration

Click the button to display or hide the fields.

These are settings to import an MU CID file and/or support IEC 61869-9 based SV streams, as per Table 902 on Standard sample rates. IEC 61869-9 allows flexibility on numbers of current and voltage channels. It can be in one of these sequences: A, B, C, N or A, AB, B, BC, C, CA, N. The UR supports up to eight CT channels and up to eight VT channels and one or two ASDUs for protection applications. The following settings are active when the **SV Stream** field is set to IEC 61869-9, and they also depend on the MU **Variant Code**.

MU SCL Import

Use this feature to configure SV streams by importing an MU CID file. The setting file comparison with IEC 61869-9-2LE configuration is not available. The IEC 61850 Merge feature with IEC 61869-9-2LE is not available.

Upon clicking the Import button and selecting a .cid file, a window appears from which to select the stream to import.

Figure 5-118: Selecting a stream to import from a merging unit CID file

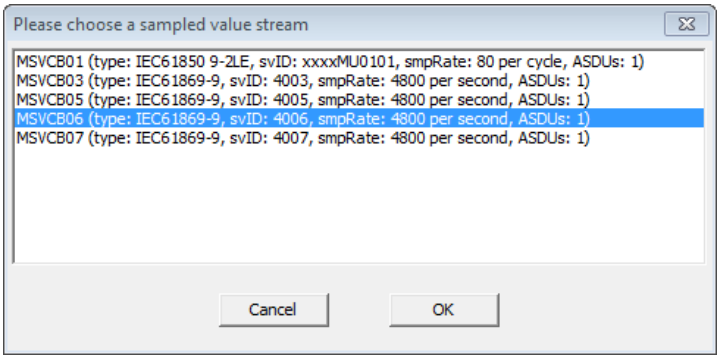

Rules for accepting a CID file include

- The same remote channel cannot be mapped to more than one AC bank channel
- An AC bank channel cannot be mapped to more than one remote channel
- For each AC bank, there are three phase inputs from the same SV control block and all three inputs are configured
- Phase 1 and Phase 2 inputs are not from the same SV control block
- Phase 1 and Phase 2 aux inputs are not from the same SV control block

- A configured Phase consumes three analog channels and Aux consumes one analog channel, with a maximum of 24 channels

SvCBRef

Range: 0 up to 129 alphanumeric, underscore, slash, and period characters, beginning with an alpha character
Default: empty string

This field is read-only. When imported, the MU SCL file populates this field. The value is an ObjectReference to the publishing control block in the format:

<LDName>/LLN0.<SvCBName>

where <LDName> is the function-related name, if any, of the logical device containing the publishing control block, otherwise the product-related name of that logical device, and <SvCBName> is the name of the publishing control block.

When RxSV# is configured manually, the field is empty.

CT Channels

Range: 0 to 8
Default: 4

This setting specifies the number of CT channels available in the subscribed RxSV# message from the publisher MU. The CT-1 fields reflect the number selected here. The number of current quantities matches the number specified by the **Variant Code** of the MU.

Typically, a CT channel includes four current channels (three phase-ground currents and one ground/neutral/earth current). A current channel is the combination of the current sample value attribute (AmpSv.instMag.i) and the subsequent quality attribute (AmpSv.q).

If CT Channels is 4, CT1-A/B/C/N are supported for the stream.

If CT Channels is 8, CT2-A/B/C/N also are supported for the stream.

If CT Channels is 0, no CT channels display for AC input selection.

This setting is read-only and fixed at 4 when an **SV Stream** is set to IEC 61850-9-2LE.

If a message displays that "the number of channels being selected for CT inputs...exceeds the total allowable 4 CT channels," it means that the CT Channels field is set at 4 and there are entries in the CT2-A/B/C/N fields. Set the latter fields to None or increase the number of channels.

VT Channels

Range: 0 to 8
Default: 4

This setting specifies the number of VT channels in the subscribed RxSV# message from the publisher MU. Typically, VT channels include four voltage channels (three phase-ground voltages and auxiliary voltage). This setting specifies the number of voltage channels in the subscribed RxSV# message. The voltage channel is the combination of voltage sample value attribute (VolSv.instMag.i) and the corresponding quality attribute (VolSv.q). The VT-1 fields reflect the number selected here. The number of voltage quantities matches the number specified by the **Variant Code** of the dataset.

If VT Channels is 4, VT1-A/B/C/N are supported for the stream.

If VT Channels is 8, VT2-A/B/C/ also are supported for the stream.

If VT Channels is 0, no VT channels display for AC input selection.

This setting is read-only and fixed at 4 when an **SV Stream** is set to IEC 61850-9-2LE.

If a message displays that "the number of channels being selected for VI inputs...exceeds the total allowable 2 VT channels," it means that the VT Channels field is set at 2 and there are more than two entries in the VT1-A/B/C/N fields. The number of configured VT1 fields needs to match the VT Channels field.

ASDUs

Range: 1, 2
Default: 1

This setting specifies the number of Application-layer Service Data Units (ASDUs) concatenated in one Application Protocol Data Unit (APDU) in the subscribed RxSV# message. When concatenating several ASDUs into one frame, the ASDU with the oldest samples is the first one in the frame.

This setting is read-only and set at the default when an **SV Stream** is set to IEC 61850-9-2LE. When SV Strem is set to IEC 61869-9, this setting can only be set to the default value 1 in UR8.50 , it can be set to other value in the previous versions.

Recycle power to the relay when changing this setting.

Variant Code

The EnerVista software auto-populates the Variant Code for the RxSV# message based on the settings Sample Rate, the number of ASDUs, the number of CT Channels, and the number of VT Channels configured.

For example, F4800S2I8U0 describes sampled values with 4800 samples per second, two ASDU (samples) per message, 8 currents, and no voltages.

As another example, F4800S1I8U4 means sampled values with 4800 samples per second, 1 ASDU per message, 8 CT channels, and 4 VT channels.

This field is read-only as per IEC 61869-9: 2016, Clause-6.903.2.

The number of samples (sample rate) in the variant code is set based on the **SETTINGS ⇨⇩ SYSTEM SETUP ⇨⇩ POWER SYSTEM ⇨⇩ NOMINAL FREQUENCY** setting. This value displays 4000 Hz for 50 Hz nominal frequency. This value displays 4800 Hz for 60 Hz nominal frequency or any other nominal frequency except 50 Hz. IEC 61869-9 suggests the 4800 Hz sample rate for general measuring and protective applications, regardless of the power system frequency.

CT1-A/B/C

Range: None, AC1 to AC16
Default: AC1/AC2/AC3

This setting specifies the sequence of Analog Channel (per phase) that is mapped to the CT-1 of the corresponding stream. An origin to CT Phase input defines the physical measurement input to the CT bank by mapping specific AC inputs from that merging unit (or SV message).

The fields are active when the **SV Stream** field is set to IEC 61869-9. The CT1 phases are available if the number of **CT Channels** is 4 or below. CT2 is added if **CT Channels** is 5 or higher.

The fields are set to the defaults and are read-only when the **SV Stream** field is set to IEC 61850-9-2LE.

CT1- N

Range: None, AC1 to AC16
Default: AC4

This setting specifies the Analog Channel that is mapped to the CT ground/neutral input. An origin to CT1-N input defines the physical measurement input to the CT bank by mapping specific AC inputs from that MU (or SV message). If the MU does not publish any CT1-N inputs, configure the setting as None.

In the EnerVista software, the CT Aux input setting only populates the current channels of that RxSV#.

This CT Aux input setting is active when the **SV Stream** field is set to IEC 61869-9.

This CT Aux input setting is set to AC4 and is read-only when the **SV Stream** is set to IEC 61850-9-2LE.

VT1-A/B/C

Range: None, AC1 to AC16
Default: AC5/AC6/AC7

This setting specifies the Analog Channel (per phase) that is mapped to the VT1- phase inputs. An origin to VT Phase input defines the physical measurement input to the VT bank by mapping specific AC inputs from that MU (or SV message). If the MU does not publish any VT channels, configure the setting as None.

The VT1 phase fields are active when the **SV Stream** field is set to IEC 61869-9. The VT1 phases are available if the number of **VT Channels** is 4 or below. VT2 is added if **VT Channels** is 5 or higher.

The fields are set to the defaults and are read-only when the **SV Stream** field is set to IEC 61850-9-2LE.

VT1-N

Range: None, AC1 to AC16
Default: AC8

This setting specifies the Analog Channel that is mapped to the VT Aux/neutral input. An origin to VT input defines the physical measurement input to the VT bank by mapping specific AC inputs from that MU (or SV message). If the MU does not publish any VT1-N inputs, configure the setting as None.

In the EnerVista software, the VT Aux input setting only populates the voltage channels of that RxSV#.

The VT1-N input setting is active when the **SV Stream** field is set to IEC 61869-9.

The VT1-N input setting is set to the default and is read-only when the **SV Stream** field is set to IEC 61850-9-2LE.

AC BANKS

The UR platform supports up to six AC Banks. They can be CT or VT banks (similar to **SETTINGS ⇨⇩ SYSTEM SETUP ⇨ AC INPUTS ⇨ CURRENT/VOLTAGE BANK**). That is, each AC Bank can be configured either as current or voltage (not both). If configured as current, inapplicable voltage settings (such as VT ratio, VT secondary) are inactive. Similarly, if a bank is configured as voltage, current settings (such as CT primary, CT secondary) are inactive. In addition, bank level redundancy (that is, Origin-1 and Origin-2) is supported using crosschecking of each channel signal received from two different SV streams that are connected to the same electrical point on the primary power system. A maximum 24 channels can be configured to the AC Banks.

Click the button to display or hide the fields.

The following settings are available for each AC bank.

Each Phase Origin setting consumes three phase channels Ia/Va, Ib/Vb, or Ic/Vc, and a Neutral Origin setting consumes one ground or Aux Channel In/Vn, which means that

- An AC Bank with Phase Origin1 and Neutral Origin1 settings configured consumes four channels
- An AC Bank with both Phase Origin 1 and Phase Origin 2 and both Neutral Origin 1 and Neutral Origin 2 settings configured consumes eight channels

A maximum of 24 channels can be configured to the AC Banks.

For changes in this section, restart the relay, for example using **Maintenance > Reboot Relay Command**.

5

Phase Origin 1, 2

Range: None, RxSV1-CT1/PHS, RxSV1-VT1/PHS to RxSV8-CT1/PHS, RxSV8-VT1/PHS
Default: None

An origin to an AC bank defines the physical measurement input to the bank by mapping specific AC inputs from a specific MU to the bank.

The UR Process Bus Module provides for the reliability of AC values for protection, metering, and oscillography by allowing duplicate origins of AC data. An origin is considered unavailable when set to None. If origin 1 is available, the relay uses the values from origin 1 for protection, metering, and oscillography. Otherwise if origin 2 is available, the relay uses the values from origin 2. If both origins are unavailable, then the bank AC values are forced to zero to prevent ambiguity of measurement.

With crosschecking, the relay can use different origins. See the **Crosschecking** setting for information regarding automatic protection blocking possibilities on loss of one or both origins.

The two-phase origins in an AC bank must be of the same type and connected to the same electrical point in the primary power system. The two origins must be two currents with the same CT settings, or two voltages with the same VT settings. The current/voltage type of the phase and auxiliary origins must also match on each AC bank. It is intended that the origin AC inputs measure the same primary quantity with the same ratio. The same ratio and connection settings are applied to both origins.

Neutral Origin 1, 2

Range: None, RxSV1-CT1/NTR, RxSV1-VT1/ NTR to RxSV8-CT1/NTR, RxSV8-VT1/ NTR
Default: None

These settings specify the field units that are the origins of the auxiliary input IN or VN. Duplicate auxiliary origins are supported in the same way as phase origins.

The two auxiliary origins in an AC bank must be of the same type. The two origins must be two currents with the same CT secondary setting, or two voltages. The current/voltage type of the phase and auxiliary origins also must match on each AC bank. It is intended that the origin AC inputs measure the same primary quantity with the same ratio. The same ratio and connection settings are applied to both origins.

Crosschecking

Range: None, Depend Origin-1 Pref, Depend Origin-2 Pref

Default: None

The crosschecking feature allows application-level redundancy by checking between two independent SV streams from the same electrical connection of the instrument transformers. In addition to the network redundancy provided by PRP/HSR, the UR Process Bus Module allows the relay to communicate with redundant merging units.

When set to None, crosschecking is disabled. Use this on a non-protection-critical AC bank, such as one used for a synchrocheck voltage. GE strongly recommends setting it to None when redundancy is not supported at the merging unit level; otherwise the "ACBank# Orig1(2) In Use" operand status is inaccurate.

Origin preference is supported in case of discrepancy in dependability mode. This allows testing (secondary injection) or replacement of an MU that is configured to non-preferred origin without affecting protection functions since these functions are using a preferred origin stream when online. As such, dependability with Origin-1 preference allows continued use of Origin-1 in case of discrepancy between both online origin stream sampled values. Similarly, dependability with Origin-2 preference allows continued use of Origin-2 in case of discrepancy between both online origin stream sampled values.

The table shows how the Crosschecking setting, the availability of AC bank origins, and discrepancy checks determine whether protection is blocked. Blocked here means only protection elements. It does not inhibit metering, actual values, oscillography, or other functions.

When set to Depend Origin-1 Pref, protection is blocked if there is no good signal from both the Origin-1 and Origin-2 sources. When both the merging unit sources are good, the preference is given always for Origin-1. When the preferred MU sources fails, the alternate MU source is used for protection and measurement.

When set to Depend Origin-2 Pref, protection is blocked if there is no good signal from both the Origin-1 and Origin-2 sources. When both the merging unit sources are good, the preference is given always for Origin-2. When the preferred MU sources fails, the alternate MU source is used for protection and measurement.

5

NOTE

While switching from a preferred to non-preferred channel, the protection functions are delayed for two cycles. While switching back to a preferred channel, the protection functions are delayed for one cycle.

Table 5-25: Crosschecking and protection behavior

Crosschecking setting	Origin-1 RxSV stream status	Origin-2 RxSV stream status	Discrepancy check	Protection operation
None	Not relevant	Not relevant	No check	Normal
Depend Origin-1 Pref	Not mapped	Not mapped	No check	Normal
	Online	Online	OK / discrepant	Normal using Origin-1 stream
	Online	Offline	No check	Normal using Origin-1 stream
	Offline	Online	No check	Normal using Origin-2 stream
	Offline	Offline	No check	Blocked
Depend Origin-2 Pref	Not mapped	Not mapped	No check	Normal
	Online	Online	OK / discrepant	Normal using Origin-2 stream
	Online	Offline	No check	Normal using Origin-1 stream
	Offline	Online	No check	Normal using Origin-2 stream
	Offline	Offline	No check	Blocked

Origin1 becomes offline and switches to Origin2 for the following reasons:

- When more than three of five frame samples received are invalid or a frame with sequence number is received after three consecutive missed frames for any channel of origin.

  The reason for invalid frames can be any of the following reasons:

  – If one or more AmpSv.q or VolSv.q attribute(s) are invalid from the assigned SV frame channels to the AC bank origin

- When “Quality Check” is set to 'Reject questionable' data, the data with q.validity = questionable is processed as invalid
- When the relay is in-service or the test function is Disabled, the SV data with q.test set to TRUE is processed invalid
- When received SV frames with Sim Bit TRUE, the frame is invalid unless the value of @Master/LPHD1.Sim.stVal is true (that is **Settings > Simulation > GOOSE/SV > Accept Sim GOOSE&SV** or **Settings > Simulation > Subscribe to Simulated Values > Simulation Mode** is set to Enabled)
- If the value of @Master/LPHD1.Sim.stVal is TRUE, once a subscribed SV messages with simulation bit TRUE are received, subscribed SV messages with simulation bit FALSE are invalid until @Master/LPHD1.Sim.stVal is set to FALSE
- SV streams with “SmpSync” value out of the following specified ranges are rejected:

  i. When the “SmpSynch Check” is set to “Global” (2), SV streams with “SmpSynch” value set to Global (2) are accepted

  ii. When the “SmpSynch Check” is set to “Local” (1), SV streams with “SmpSynch” value set to Global (2) or Local (1) are accepted

  iii. When the “SmpSynch Check” is set to “Any” (0 to 254), SV streams with “SmpSynch” value set in the range of 0 to 254 are accepted. For 7.80 version, the accepted range is 0 to 127.

- SV frames are delayed/not received for more than 1.9 power system cycles

The selected Origin quality will be the quality of the AC Bank.

If both Origins have invalid quality, then the AC Bank data is marked as invalid and does not participate in protection.

Phase/Ground CT Primary

Range: 1 to 65000 A insteps of 1

Default: 1

Enter the rated CT primary current value in Amperes. For 1000:5 and 1000:1 CTs, enter 1000.

Phase/Ground CT Secondary

Range: 1A, 5A

Default: 1A

Enter the rated CT secondary current value in Amperes. For correct operation, the CT secondary rating must match the setting (that must also correspond to the specific CT connections used).

Phase CT Polarity

Range: Standard, Inverted-3ph, Inverted Ph-A, Inverted Ph-B, Inverted Ph-C

Default: Standard

If CTs are wired with the correct polarity in all phases, i.e. CT polarity reversal is not required, “Standard” should be selected. If CT polarity is incorrect in just one phase, then select “Inverted Ph-A (B or C)”; choosing the affected phase. If CT polarities of all three phases are incorrect, select “Inverted-3Ph” to correct the CT polarities for all three phases. It should be noted that the oscillography record will capture the CTs current signal as applied to the relay terminal irrespective of this setting. This ensures correct relay behavior when recorded oscillography is played back to the relay.

Ground CT Polarity

Range: Standard, Inverted

Default: Standard

If the ground CT is wired with the correct polarity, select “Standard” for this setting. If the Ground CT polarity is incorrect, then select “Inverted” to correct it. It should be noted that the oscillography record will capture ground CT current signal as applied to the relay terminal irrespective of this setting. This ensures the correct relay behavior when recorded oscillography is played back to the relay.

NOTE

It is important that the settings **PHASE CT POLARITY** and **GROUND CT POLARITY** are set to the correct values before putting the relay into operation. Selecting the wrong value or changing this setting whilst relay is in operation would result in undesirable operation of the protection and control functions.
If the user intends to use the crosschecking functionality (redundancy at MU level), then this setting should be used carefully to ensure that CT Polarity is the same on both MUs on each phase/neutral channel.

SIGNAL SOURCES

Click the button to display or hide the fields. The first six Sources are the platform sources and can accept both current banks and voltage banks and are associated with AC bank 1 to 6. The first six sources allow current summation for phase and auxiliary CTs.

Recycle power to the relay when changing a source.

Name

Range: up to 20 alphanumeric characters
Default: SRC 1

This setting specifies an alphanumeric name for the source.

Phase CT

Range: None, B1, B2, B3, B4, B5, B6, B1+B2, ... B1+B2+B3+B4+B5+B6 or B7...B28
Default: None

This setting selects the phase CTs of an AC bank or the sum of the phase CTs of multiple AC banks to be the phase current of the source. That is, it select the AC Banks section above in the window.

If you see the message "the AC Bank x assigned...is not configured..," it means that you need to configure the AC Banks section in the software window before setting this field. The AC Bank selected can match the Origins fields and Sources, such as a Phase CT set at B**1** with Phase Origin 1 RxSV**1**-CT1/PHS and source SRC**1**. Another example is to use Phase CT set at B**2** with Phase Origin 1 RxSV**2**-CT1/PHS and source SRC**2**.

Ground CT

Range: None, B1, B2, B3, B4, B5, B6, B1+B2, ... B1+B2+B3+B4+B5+B6 or B7...B28
Default: None

This setting selects the ground CTs of an AC bank or the sum of the ground CTs of multiple AC banks to be the ground current of the source. That is, it selects the AC Banks section above in the window.

Phase VT

Range: None, B1, B2, B3, B4, B5, B6
Default: None

This setting selects the phase VTs of an AC bank to be the phase voltages of the source.

Aux VT

Range: None, B1, B2, B3, B4, B5, B6
Default: None

This setting selects the auxiliary VT input of an AC bank to be the auxiliary voltage of the source.

Alt Phase CT

Range: None, B1, B2, B3, B4, B5, B6, B1+B2, ... B1+B2+B3+B4+B5+B6 or B7...B28
Default: None

This setting is for switching between main and alternate sources. It selects the alternate phase CTs of an AC bank or the sum of the phase CTs of multiple AC banks to be the phase current of the source.

Alt Ground CT

Range: None, B1, B2, B3, B4, B5, B6, B1+B2, ... B1+B2+B3+B4+B5+B6 or B7...B28
Default: None

This setting is for switching between main and alternate sources. It selects the ground CTs of an AC bank or the sum of the ground CTs of multiple AC banks to be the ground current of the source.

Switch Alt CT

Range: FlexLogic operand
Default: Off

This setting is for switching the alternate source on or off.

Alt Phase VT

Range: None, B1, B2, B3, B4, B5, B6

Default: None

This setting is for switching between main and alternate sources. It selects the phase VTs of an AC bank to be the phase voltages of the source.

Alt Aux VT

Range: None, B1, B2, B3, B4, B5, B6

Default: None

This setting is for switching between main and alternate sources. It selects the auxiliary VT input of an AC bank to be the auxiliary voltage of the source.

Switch Alt VT

Range: FlexLogic operand

Default: Off

This setting is for switching the alternate source on or off.

5.7 FlexLogic

5.7.1 FlexLogic operands

For flexibility, the arrangement of internal digital logic combines fixed and user-programmed parameters. Logic upon which individual features are designed is fixed, and all other logic, from contact input signals through elements or combinations of elements to contact outputs, is variable. The user has complete control of all variable logic through FlexLogic. In general, the system receives analog and digital inputs that it uses to produce analog and digital outputs. The figure shows major subsystems of a generic UR-series relay involved in this process.

Figure 5-119: UR architecture overview

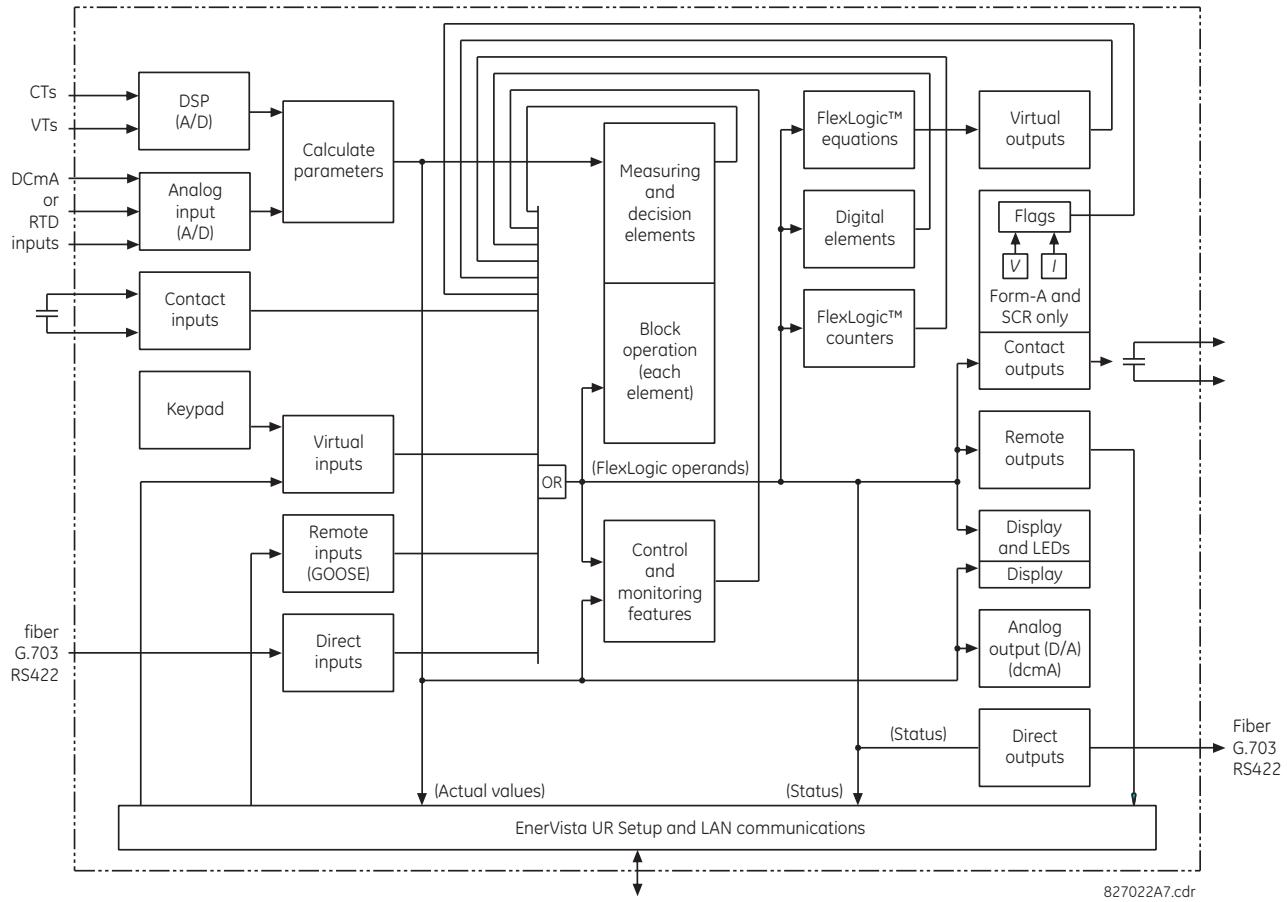

The states of all digital signals used in the N60 are represented by flags (or FlexLogic operands, which are described later in this section). A digital "1" is represented by a set flag. Any external contact change-of-state can be used to block an element from operating, as an input to a control feature in a FlexLogic equation, or to operate a contact output. The state of the contact input can be displayed locally or viewed remotely via the communications facilities provided. If a simple scheme where a contact input is used to block an element is wanted, this selection is made when programming the element. This capability also applies to the other features that set flags: elements, virtual inputs, remote inputs, schemes, and human operators.

If more complex logic than shown in the figure is required, it is implemented via FlexLogic. For example, to have the closed state of contact input H7a and the operated state of the phase undervoltage element block the operation of the phase time overcurrent element, the two control input states are programmed in a FlexLogic equation. This equation ANDs the two control inputs to produce a virtual output that is then selected when programming the phase time overcurrent to be used as a blocking input. Virtual outputs can only be created by FlexLogic equations.

Traditionally, protective relay logic has been relatively limited. Any unusual applications involving interlocks, blocking, or supervisory functions had to be hard-wired using contact inputs and outputs. FlexLogic minimizes the requirement for auxiliary components and wiring while making more complex schemes possible.

The logic that determines the interaction of inputs, elements, schemes, and outputs is field-programmable through the use of logic equations that are sequentially processed. The use of virtual inputs and outputs in addition to hardware is available internally and on the communication ports for other relays to use (distributed FlexLogic).

FlexLogic allows users to customize the relay through a series of equations that consist of operators and operands. The operands are the states of inputs, elements, schemes, and outputs. The operators are logic gates, timers, and latches (with set and reset inputs). A system of sequential operations allows any combination of operands to be assigned as inputs to

specified operators to create an output. The final output of an equation is a numbered register called a virtual output. Virtual outputs can be used as an input operand in any equation, including the equation that generates the output, as a seal-in or other type of feedback.

A FlexLogic equation consists of parameters that are either operands or operators. Operands have a logic state of 1 or 0. Operators provide a defined function, such as an AND gate or a Timer. Each equation defines the combinations of parameters to be used to set a Virtual Output flag. Evaluation of an equation results in either a 1 (=ON, or flag set) or 0 (=OFF, or flag not set). Each equation is evaluated at least four times every power system cycle.

Some types of operands are present in the relay in multiple instances, for example contact and remote inputs. These types of operands are grouped together (for presentation purposes only) on the front panel display. The table lists characteristics of the different types of operands.

Table 5-26: N60 FlexLogic operand types

Operand type	State	Example of format	Characteristics [Input Is '1' (= ON) if...]
Contact Input	On	Cont Ip On	Voltage is applied presently to the input (external contact closed)
	Off	Cont Ip Off	Voltage is not applied presently to the input (external contact open)
Contact Output (type Form-A contact only)	Contact Closed	Cont Op 1 Closed	Contact output is closed
	Current On	Cont Op 1 Ion	Current is flowing through the contact
	Voltage On	Cont Op 1 VOn	Voltage exists across the contact
	Voltage Off	Cont Op 1 VOff	Voltage does not exist across the contact
Direct Input	On	DIRECT INPUT 1 On	The direct input is presently in the ON state
Element (Analog)	Pickup	PHASE TOC1 PKP	The tested parameter is presently above the pickup setting of an element that responds to rising values or below the pickup setting of an element that responds to falling values
	Dropout	PHASE TOC1 DPO	This operand is the logical inverse of the above PKP operand
	Operate	PHASE TOC1 OP	The tested parameter has been above/below the pickup setting of the element for the programmed delay time, or has been at logic 1 and is now at logic 0 but the reset timer has not finished timing
	Block	PHASE TOC1 BLK	The output of the comparator is set to the block function
Element (Digital)	Pickup	Dig Element 1 PKP	The input operand is at logic 1
	Dropout	Dig Element 1 DPO	This operand is the logical inverse of the above PKP operand
	Operate	Dig Element 1 OP	The input operand has been at logic 1 for the programmed pickup delay time, or has been at logic 1 for this period and is now at logic 0 but the reset timer has not finished timing
Element (Digital Counter)	Higher than	Counter 1 HI	The number of pulses counted is above the set number
	Equal to	Counter 1 EQL	The number of pulses counted is equal to the set number
	Lower than	Counter 1 LO	The number of pulses counted is below the set number
Fixed	On	On	Logic 1
	Off	Off	Logic 0
RxGOOSE Boolean	On	RxGOOSE Boolean 1 On	The RxGOOSE Boolean is presently in the ON state
Virtual Input	On	Virt Ip 1 On	The virtual input is presently in the ON state
Virtual Output	On	Virt Op 1 On	The virtual output is presently in the set state (that is, evaluation of the equation that produces this virtual output results in a "1")

The following table lists the operands available for the relay. The operands can be viewed online by entering the IP address of the relay in a web browser and accessing the Device Information Menu.

NOTE

Any FlexLogic operands that are visible online but not listed below, are intended for factory use.

Table 5-27: N60 FlexLogic operands

Operand type	Operand syntax	Operand description
ANNUNCIATOR Graphical front panel	ANY ANCTR ABNORMAL ANY ANCTR ALARMED	On for one second when any annunciator window state changes from normal to abnormal On while any annunciator window state is abnormal
CONTROL PUSHBUTTONS Enhanced and basic front panels	CONTROL PUSHBTN 1 ON CONTROL PUSHBTN 2 ON CONTROL PUSHBTN 3 ON CONTROL PUSHBTN 4 ON CONTROL PUSHBTN 5 ON CONTROL PUSHBTN 6 ON CONTROL PUSHBTN 7 ON	Control pushbutton 1 is being pressed Control pushbutton 2 is being pressed Control pushbutton 3 is being pressed Control pushbutton 4 is being pressed Control pushbutton 5 is being pressed Control pushbutton 6 is being pressed Control pushbutton 7 is being pressed
CYBERSENTRY	ROLE ADMIN ACT ROLE SUPERVISOR ACT ROLE ENGINEER ACT ROLE OPERATOR ACT ROLE OBSERVER ACT AUTHENTICATION FAIL UNAUTH FW ATTEMPT UNAUTH SETTING WRITE FACTORY MODE ACTIVE ROLE M2M ACT	Administrator role is active and is set to true when that is the case Supervisor role is active and is set to true when that is the case Engineer role is active and is set to true when that is the case Operator role is active and is set to true when that is the case Observer role is active and is set to true when that is the case Operand set for Failed Authentication self-test and alarm Operand set for firmware lock self-test and alarm Operand set for settings lock self-test and alarm Factory mode is enabled and set to true Machine to machine role is active (CyberSecurity)
DIRECT DEVICES	DIRECT DEVICE 1On ↓ DIRECT DEVICE 16On DIRECT DEVICE 1Off ↓ DIRECT DEVICE 16Off	Flag is set, logic=1 ↓ Flag is set, logic=1 Flag is set, logic=1 ↓ Flag is set, logic=1
DIRECT INPUT/ OUTPUT CHANNEL MONITORING	DIR IO CH1 CRC ALARM DIR IO CH2 CRC ALARM DIR IO CH1 UNRET ALM DIR IO CH2 UNRET ALM	The rate of direct input messages received on channel 1 and failing the CRC exceeded the user-specified level The rate of direct input messages received on channel 2 and failing the CRC exceeded the user-specified level The rate of returned direct input/output messages on channel 1 exceeded the user-specified level (ring configurations only) The rate of returned direct input/output messages on channel 2 exceeded the user-specified level (ring configurations only)
ELEMENT: Eight-bit comparator	8BIT COMP 1 PKP 8BIT COMP 1 DPO 8BIT COMP 1 OP 8BIT COMP 1 BIT 0 8BIT COMP 1 BIT 1 8BIT COMP 1 BIT 2 8BIT COMP 1 BIT 3 8BIT COMP 1 BIT 4 8BIT COMP 1 BIT 5 8BIT COMP 1 BIT 6 8BIT COMP 1 BIT 7	Comparator 1 has picked up Comparator 1 has dropped out Comparator 1 has operated Bit 0 of comparator 1 asserted (the least significant bit) Bit 1 of comparator 1 asserted Bit 2 of comparator 1 asserted Bit 3 of comparator 1 asserted Bit 4 of comparator 1 asserted Bit 5 of comparator 1 asserted Bit 6 of comparator 1 asserted (the most significant bit) Sign bit of comparator 1 asserted (asserted for negative values; de-asserted for positive values)
	8BIT COMP 2 to 6	Same set of operands as shown for 8 BIT COMP 1
ELEMENT: Eight-bit switch	8BIT SWITCH 1 BIT 0 8BIT SWITCH 1 BIT 1 8BIT SWITCH 1 BIT 2 8BIT SWITCH 1 BIT 3 8BIT SWITCH 1 BIT 4 8BIT SWITCH 1 BIT 5 8BIT SWITCH 1 BIT 6 8BIT SWITCH 1 BIT 7	Bit 0 of eight-bit switch 1 asserted (the least significant bit) Bit 1 of eight-bit switch 1 asserted Bit 2 of eight-bit switch 1 asserted Bit 3 of eight-bit switch 1 asserted Bit 4 of eight-bit switch 1 asserted Bit 5 of eight-bit switch 1 asserted Bit 6 of eight-bit switch 1 asserted Bit 7 of eight-bit switch 1 asserted (the most significant bit)
	8BIT SWITCH 2 to 6	Same set of operands as shown for 8 BIT SWITCH 1

Operand type	Operand syntax	Operand description
ELEMENT: AC sources switching	SRC 1 CT SW PROT BLK SRC 1 VT SW PROT BLK SRC1 CT ALT BANK ON SRC1 CT ALT BANK OFF SRC1 VT ALT BANK ON SRC1 VT ALT BANK OFF	Protection blocked due to Source 1 CT switching Protection blocked due to Source 1 VT switching Source 1 switched CT input from Main to Alternate Source 1 switched CT input from Alternate to Main Source 1 switched VT input from Main to Alternate Source 1 switched VT input from Alternate to Main
	SRC 1 to 6	Same set of operands as shown for SRC 1
ELEMENT: Breaker control	BREAKER 1 OFF CMD BREAKER 1 ON CMD BREAKER 1 ΦA BAD ST BREAKER 1 ΦA INTERM BREAKER 1 ΦA CLSD BREAKER 1 ΦA OPEN BREAKER 1 ΦB BAD ST BREAKER 1 ΦB INTERM BREAKER 1 ΦB CLSD BREAKER 1 ΦB OPEN BREAKER 1 ΦC BAD ST BREAKER 1 ΦC INTERM BREAKER 1 ΦC CLSD BREAKER 1 ΦC OPEN BREAKER 1 BAD STATUS BREAKER 1 CLOSED BREAKER 1 OPEN BREAKER 1 DISCREP BREAKER 1 TROUBLE BREAKER 1 MNL OPEN BREAKER 1 MNL CLS BREAKER 1 TRIP A BREAKER 1 TRIP B BREAKER 1 TRIP C BREAKER 1 ANY P OPEN BREAKER 1 ONE P OPEN BREAKER 1 OOS BREAKER 1 TAG ON BREAKER 1 TAG OFF BREAKER 1 SUBD CLSD BREAKER 1 SUBD OPEN BREAKER 1 BYPASS ON BREAKER 1 BYPASS OFF BREAKER 1 BLK RCLS BREAKER 1 ENA RCLS BREAKER 1 BAY AUTHOR ON BREAKER 1 STATN AUTHOR ON BREAKER 1 REM AUTHOR ON BREAKER 1 LOCAL AUTHOR ON	Breaker 1 3-pole open command/trip initiated Breaker 1 close command initiated Breaker 1 phase A bad status is detected (discrepancy between the 52/a and 52/b contacts) Breaker 1 phase A intermediate status is detected (transition from one position to another) Breaker 1 phase A is closed Breaker 1 phase A is open Breaker 1 phase B bad status is detected (discrepancy between the 52/a and 52/b contacts) Breaker 1 phase B intermediate status is detected (transition from one position to another) Breaker 1 phase B is closed Breaker 1 phase B is open Breaker 1 phase C bad status is detected (discrepancy between the 52/a and 52/b contacts) Breaker 1 phase C intermediate status is detected (transition from one position to another) Breaker 1 phase C is closed Breaker 1 phase C is open Breaker 1 bad status is detected on any pole Breaker 1 is closed Breaker 1 is open Breaker 1 has discrepancy Breaker 1 trouble alarm Breaker 1 manual open Breaker 1 manual close Breaker 1 trip phase A command Breaker 1 trip phase B command Breaker 1 trip phase C command At least one pole of breaker 1 is open Only one pole of breaker 1 is open Breaker 1 is out of service Breaker 1 tagged so manual trip and close and autoreclose are blocked Breaker 1 not tagged Breaker 1 status manually substituted to closed Breaker 1 status manually substituted to open Breaker 1 control interlocking is manually bypassed Breaker 1 control interlocking is not manually bypassed Breaker 1 command to manually block autoreclose Breaker 1 command to manually enable autoreclose Breaker 1 Bay Level authority is on Breaker 1 Station Level authority is on Breaker 1 Remote Level Authority is on Breaker 1 Local Control Authority is on
	BREAKER 2 to 6	Same set of operands as shown for BREAKER 1
ELEMENT: CT fail	CT FAIL 1 PKP CT FAIL 1 OP	CT fail has picked up CT fail has dropped out
	CT FAIL 2 to 6	Same set of operands as per CT FAIL 1
ELEMENT: Digital counters	Counter 1 HI Counter 1 EQL Counter 1 LO	Digital counter 1 output is 'more than' comparison value Digital counter 1 output is 'equal to' comparison value Digital counter 1 output is 'less than' comparison value
	Counter 2 to 8	Same set of operands as shown for Counter 1

Operand type	Operand syntax	Operand description
ELEMENT: Digital elements	Dig Element 1 PKP Dig Element 1 OP Dig Element 1 DPO	Digital Element 1 is picked up Digital Element 1 is operated Digital Element 1 is dropped out
	Dig Element 2 to 96	Same set of operands as shown for Dig Element 1
ELEMENT: Digitizer	DIGITIZER 1 BIT 0 DIGITIZER 1 BIT 1 DIGITIZER 1 BIT 2 DIGITIZER 1 BIT 3 DIGITIZER 1 BIT 4 DIGITIZER 1 BIT 5 DIGITIZER 1 BIT 6 DIGITIZER 1 BIT 7	Bit 0 of digitizer 1 asserted (the least significant bit) Bit 1 of digitizer 1 asserted Bit 2 of digitizer 1 asserted Bit 3 of digitizer 1 asserted Bit 4 of digitizer 1 asserted Bit 5 of digitizer 1 asserted Bit 6 of digitizer 1 asserted (the most significant bit) Bit 7 of digitizer 1 asserted (asserted for negative values, de-asserted for positive values)
	DIGITIZER 2 to 5	Same set of operands as shown for DIGITIZER 1
	Output = $(-1)^{B7} x(B6x2^6 + B5x2^5 + \ldots + B1x2^1 + B0x2^0)$	
ELEMENT: Sensitive directional power	DIR POWER 1 STG1 PKP DIR POWER 1 STG2 PKP DIR POWER 1 STG1 DPO DIR POWER 1 STG2 DPO DIR POWER 1 STG1 OP DIR POWER 1 STG2 OP DIR POWER 1 PKP DIR POWER 1 DPO DIR POWER 1 OP	Stage 1 of the directional power element 1 has picked up Stage 2 of the directional power element 1 has picked up Stage 1 of the directional power element 1 has dropped out Stage 2 of the directional power element 1 has dropped out Stage 1 of the directional power element 1 has operated Stage 2 of the directional power element 1 has operated The directional power element has picked up The directional power element has dropped out The directional power element has operated
	DIR POWER 2	Same set of operands as DIR POWER 1
ELEMENT: Frequency rate of change	FREQ RATE 1 PKP FREQ RATE 1 DPO FREQ RATE 1 OP	The frequency rate of change 1 element has picked up The frequency rate of change 1 element has dropped out The frequency rate of change 1 element has operated
	FREQ RATE 2 to 4	Same set of operands as shown for FREQ RATE 1
ELEMENT: FlexElements	FxE 1 PKP FxE 1 OP FxE 1 DPO	FlexElement 1 has picked up FlexElement 1 has operated FlexElement 1 has dropped out
	FxE 2 to 16	Same set of operands as shown for FxE 1
ELEMENT: Ground instantaneous overcurrent	GROUND IOC1 PKP GROUND IOC1 OP GROUND IOC1 DPO	Ground instantaneous overcurrent 1 has picked up Ground instantaneous overcurrent 1 has operated Ground instantaneous overcurrent 1 has dropped out
	GROUND IOC2 to 12	Same set of operands as shown for GROUND IOC 1
ELEMENT: Ground time overcurrent	GROUND TOC1 PKP GROUND TOC1 OP GROUND TOC1 DPO	Ground time overcurrent 1 has picked up Ground time overcurrent 1 has operated Ground time overcurrent 1 has dropped out
	GROUND TOC2 to 6	Same set of operands as shown for GROUND TOC1
Element: Harmonic detection	HARMONIC DET 1 PKP HARMONIC DET 1 PKP A HARMONIC DET 1 PKP B HARMONIC DET 1 PKP C HARMONIC DET 1 PKP G HARMONIC DET 1 OP HARMONIC DET 1 OP A HARMONIC DET 1 OP B HARMONIC DET 1 OP C HARMONIC DET 1 OP G	At least one phase (or the average current) of HARMONIC DET 1 has picked up HARMONIC DET 1 has picked up in phase A HARMONIC DET 1 has picked up in phase B HARMONIC DET 1 has picked up in phase C HARMONIC DET 1 has picked up in Ground channel HARMONIC DET 1 has operated per Phases for Operation selection Phase A of HARMONIC DET 1 has operated Phase B of HARMONIC DET 1 has operated Phase C of HARMONIC DET 1 has operated HARMONIC DET 1 has operated in Ground channel
ELEMENT: IED mode	IED BEH TEST IED BEH TEST-BLOCKED IED BEH ON	Relay in Test mode Relay in Test Blocked mode Relay mode is On
ELEMENT: Non-volatile latches	LATCH 1 ON LATCH 1 OFF	Non-volatile latch 1 is ON (Logic = 1) Non-volatile latch 1 is OFF (Logic = 0)
	LATCH 2 to 16	Same set of operands as shown for LATCH 1

Operand type	Operand syntax	Operand description
ELEMENT: Neutral instantaneous overcurrent	NEUTRAL IOC1 PKP NEUTRAL IOC1 OP NEUTRAL IOC1 DPO	Neutral instantaneous overcurrent 1 has picked up Neutral instantaneous overcurrent 1 has operated Neutral instantaneous overcurrent 1 has dropped out
	NEUTRAL IOC2 to 12	Same set of operands as shown for NEUTRAL IOC1
ELEMENT: Neutral time overcurrent	NEUTRAL TOC1 PKP NEUTRAL TOC1 OP NEUTRAL TOC1 DPO	Neutral time overcurrent 1 has picked up Neutral time overcurrent 1 has operated Neutral time overcurrent 1 has dropped out
	NEUTRAL TOC2 to 6	Same set of operands as shown for NEUTRAL TOC1
ELEMENT: Neutral directional overcurrent	NTRL DIR OC1 FWD NTRL DIR OC1 REV	Neutral directional overcurrent 1 forward has operated Neutral directional overcurrent 1 reverse has operated
	NTRL DIR OC2 to 3	Same set of operands as shown for NTRL DIR OC1
ELEMENT: Open pole detector (supervisor)	OPEN POLE OP ϕA OPEN POLE OP ϕB OPEN POLE OP ϕC OPEN POLE OP	Open pole condition is detected in phase A Open pole condition is detected in phase B Open pole condition is detected in phase C Open pole detector is operated
ELEMENT: Overfrequency	OVERFREQ 1 PKP OVERFREQ 1 OP OVERFREQ 1 DPO	Overfrequency 1 has picked up Overfrequency 1 has operated Overfrequency 1 has dropped out
	OVERFREQ 2 to 4	Same set of operands as shown for OVERFREQ 1
ELEMENT: Synchrophasor phasor data concentrator	PDC NETWORK CNTRL 1 PDC NETWORK CNTRL 2 ↓ PDC NETWORK CNTRL 16	Phasor data concentrator asserts control bit 1 as received via the network Phasor data concentrator asserts control bit 2 as received via the network ↓ Phasor data concentrator asserts control bit 16 as received via the network
ELEMENT: Phase directional overcurrent	PH DIR1 BLK A PH DIR1 BLK B PH DIR1 BLK C PH DIR1 BLK	Phase A directional 1 block Phase B directional 1 block Phase C directional 1 block Phase directional 1 block
	PH DIR2 to 3	Same set of operands as shown for PH DIR1
ELEMENT: Phase instantaneous overcurrent	PHASE IOC1 PKP PHASE IOC1 OP PHASE IOC1 DPO PHASE IOC1 PKP A PHASE IOC1 PKP B PHASE IOC1 PKP C PHASE IOC1 OP A PHASE IOC1 OP B PHASE IOC1 OP C PHASE IOC1 DPO A PHASE IOC1 DPO B PHASE IOC1 DPO C	At least one phase of phase instantaneous overcurrent 1 has picked up At least one phase of phase instantaneous overcurrent 1 has operated All phases of phase instantaneous overcurrent 1 have dropped out Phase A of phase instantaneous overcurrent 1 has picked up Phase B of phase instantaneous overcurrent 1 has picked up Phase C of phase instantaneous overcurrent 1 has picked up Phase A of phase instantaneous overcurrent 1 has operated Phase B of phase instantaneous overcurrent 1 has operated Phase C of phase instantaneous overcurrent 1 has operated Phase A of phase instantaneous overcurrent 1 has dropped out Phase B of phase instantaneous overcurrent 1 has dropped out Phase C of phase instantaneous overcurrent 1 has dropped out
	PHASE IOC2 to 12	Same set of operands as shown for PHASE IOC1
ELEMENT: Phase overvoltage	PHASE OV1 PKP PHASE OV1 OP PHASE OV1 DPO PHASE OV1 PKP A PHASE OV1 PKP B PHASE OV1 PKP C PHASE OV1 OP A PHASE OV1 OP B PHASE OV1 OP C PHASE OV1 DPO A PHASE OV1 DPO B PHASE OV1 DPO C	At least one phase of overvoltage 1 has picked up At least one phase of overvoltage 1 has operated All phases of overvoltage 1 have dropped out Phase A of overvoltage 1 has picked up Phase B of overvoltage 1 has picked up Phase C of overvoltage 1 has picked up Phase A of overvoltage 1 has operated Phase B of overvoltage 1 has operated Phase C of overvoltage 1 has operated Phase A of overvoltage 1 has dropped out Phase B of overvoltage 1 has dropped out Phase C of overvoltage 1 has dropped out
	PHASE OV2 to 3	Same set of operands as shown for PHASE OV1

Operand type	Operand syntax	Operand description
ELEMENT: Phase time overcurrent	PHASE TOC1 PKP	At least one phase of phase time overcurrent 1 has picked up
	PHASE TOC1 OP	At least one phase of phase time overcurrent 1 has operated
	PHASE TOC1 DPO	All phases of phase time overcurrent 1 have dropped out
	PHASE TOC1 PKP A	Phase A of phase time overcurrent 1 has picked up
	PHASE TOC1 PKP B	Phase B of phase time overcurrent 1 has picked up
	PHASE TOC1 PKP C	Phase C of phase time overcurrent 1 has picked up
	PHASE TOC1 OP A	Phase A of phase time overcurrent 1 has operated
	PHASE TOC1 OP B	Phase B of phase time overcurrent 1 has operated
	PHASE TOC1 OP C	Phase C of phase time overcurrent 1 has operated
	PHASE TOC1 DPO A	Phase A of phase time overcurrent 1 has dropped out
	PHASE TOC1 DPO B	Phase B of phase time overcurrent 1 has dropped out
	PHASE TOC1 DPO C	Phase C of phase time overcurrent 1 has dropped out
	PHASE TOC2 to 6	Same set of operands as shown for PHASE TOC1
ELEMENT: Phase undervoltage	PHASE UV1 PKP	At least one phase of phase undervoltage 1 has picked up
	PHASE UV1 OP	At least one phase of phase undervoltage 1 has operated
	PHASE UV1 DPO	All phases of phase undervoltage 1 have dropped out
	PHASE UV1 PKP A	Phase A of phase undervoltage 1 has picked up
	PHASE UV1 PKP B	Phase B of phase undervoltage 1 has picked up
	PHASE UV1 PKP C	Phase C of phase undervoltage 1 has picked up
	PHASE UV1 OP A	Phase A of phase undervoltage 1 has operated
	PHASE UV1 OP B	Phase B of phase undervoltage 1 has operated
	PHASE UV1 OP C	Phase C of phase undervoltage 1 has operated
	PHASE UV1 DPO A	Phase A of phase undervoltage 1 has dropped out
	PHASE UV1 DPO B	Phase B of phase undervoltage 1 has dropped out
	PHASE UV1 DPO C	Phase C of phase undervoltage 1 has dropped out
	PHASE UV2 to 3	Same set of operands as shown for PHASE UV1
ELEMENT: Synchrophasor Phasor Measurement Unit (PMU)	PMU Agg 1 SvEng On	SvEng data item in associated control block is on
	PMU 1 CURR TRIGGER	Overcurrent trigger of phasor measurement unit 1 has operated
	PMU 1 FREQ TRIGGER	Abnormal frequency trigger of phasor measurement unit 1 has operated
	PMU 1 POWER TRIGGER	Overpower trigger of phasor measurement unit 1 has operated
	PMU 1 ROCOF TRIGGER	Rate of change of frequency trigger of phasor measurement unit 1 has operated
	PMU 1 VOLT TRIGGER	Abnormal voltage trigger of phasor measurement unit 1 has operated
	PMU 1 TRIGGERED	Phasor measurement unit 1 triggered; no events or targets are generated by this operand
	PMU 1 REC OUT OF MEM	Recorder for PMU 1 out of memory (if the trigger mode is protected)
	PMU 1 REC STOPPED	Recorder for PMU 1 stopped
	PMU 2 to 6	Same set of operands as shown for PMU 1
ELEMENT: Synchrophasor one-shot	PMU ONE-SHOT EXPIRED	Indicates the one-shot operation has been executed, and the present time is at least 30 seconds past the scheduled one-shot time
	PMU ONE-SHOT OP	Indicates the one-shot operation and remains asserted for 30 seconds afterwards
	PMU ONE-SHOT PENDING	Indicates the one-shot operation is pending; that is, the present time is before the scheduled one-shot time
ELEMENT: Power swing detect	POWER SWING OUTER	Positive-sequence impedance in outer characteristic
	POWER SWING MIDDLE	Positive-sequence impedance in middle characteristic
	POWER SWING INNER	Positive-sequence impedance in inner characteristic
	POWER SWING BLOCK	Power swing blocking element operated
	POWER SWING TMR2 PKP	Power swing timer 2 picked up
	POWER SWING TMR3 PKP	Power swing timer 3 picked up
	POWER SWING TMR4 PKP	Power swing timer 4 picked up
	POWER SWING TRIP	Out-of-step tripping operated
	POWER SWING 50DD	The power swing element detected a disturbance other than power swing
	POWER SWING INCOMING	An unstable power swing has been detected (incoming locus)
	POWER SWING OUTGOING	An unstable power swing has been detected (outgoing locus)
	POWER SWING UN/BLOCK	Asserted when power swing is detected and de-asserted when a fault during power swing occurs

Operand type	Operand syntax	Operand description
ELEMENT: Selector switch	SELECTOR 1 POS Y SELECTOR 1 BIT 0 SELECTOR 1 BIT 1 SELECTOR 1 BIT 2 SELECTOR 1 STP ALARM SELECTOR 1 BIT ALARM SELECTOR 1 ALARM SELECTOR 1 PWR ALARM	Selector switch 1 is in Position Y (mutually exclusive operands) First bit of the 3-bit word encoding position of selector 1 Second bit of the 3-bit word encoding position of selector 1 Third bit of the 3-bit word encoding position of selector 1 Position of selector 1 has been pre-selected with the stepping up control input but not acknowledged Position of selector 1 has been pre-selected with the 3-bit control input but not acknowledged Position of selector 1 has been pre-selected but not acknowledged Position of selector switch 1 is undetermined or restored from memory when the relay powers up and synchronizes to the three-bit input
	SELECTOR 2	Same set of operands as shown for SELECTOR 1
ELEMENT: Setting group	SETTING GROUP ACT 1 SETTING GROUP ACT 2 SETTING GROUP ACT 3 SETTING GROUP ACT 4 SETTING GROUP ACT 5 SETTING GROUP ACT 6	Setting group 1 is active Setting group 2 is active Setting group 3 is active Setting group 4 is active Setting group 5 is active Setting group 6 is active
ELEMENT: Disturbance detector	SRC1 50DD OP SRC2 50DD OP SRC3 50DD OP SRC4 50DD OP SRC5 50DD OP SRC6 50DD OP	Source 1 disturbance detector has operated Source 2 disturbance detector has operated Source 3 disturbance detector has operated Source 4 disturbance detector has operated Source 5 disturbance detector has operated Source 6 disturbance detector has operated
ELEMENT: Multi-range signal oscillation detector (MSOD)	MSOD 1 TRIP MSOD 1 ALARM	Multi-range signal oscillation detector 1 trip picked up Multi-range signal oscillation detector 1 alarm picked up
	MSOD 2 to 6	Same as per MSOD 1
ELEMENT: VTFF (Voltage transformer fuse failure)	SRC1 VT FF OP SRC1 VT FF DPO SRC1 VT FF VOL LOSS SRC1 VT FF ALARM	Source 1 VT fuse failure detector has operated Source 1 VT fuse failure detector has dropped out Source 1 has lost voltage signals (V2 below 10% and V1 below 5% of nominal) Source 1 has triggered a VT fuse failure alarm
	SRC1 VT NEU WIRE OPEN	Source 1 VT neutral wire open detected. When the VT is connected in Delta, do not enable this function because there is no neutral wire for Delta connected VT.
	SRC2 VT FUSE FAIL to SRC6	Same set of operands as shown for SRC1 VT FF
ELEMENT: Summator	SUMMATOR 1 OP SUMMATOR 2 OP ↓ SUMMATOR 6 OP	The summator 1 result is greater than the summator 1 pickup The summator 2 result is greater than the summator 2 pickup ↓ The summator 6 result is greater than the summator 6 pickup

Operand type	Operand syntax	Operand description
ELEMENT: Disconnect switch	SWITCH 1 OFF CMD	Disconnect switch 1 open command initiated
	SWITCH 1 ON CMD	Disconnect switch 1 close command initiated
	SWITCH 1 CLOSED	Disconnect switch 1 is closed
	SWITCH 1 OPEN	Disconnect switch 1 is open
	SWITCH 1 DISCREP	Disconnect switch 1 has discrepancy
	SWITCH 1 TROUBLE	Disconnect switch 1 trouble alarm
	SWITCH 1 ΦA CLSD	Disconnect switch 1 phase A is closed
	SWITCH 1 ΦA OPEN	Disconnect switch 1 phase A is open
	SWITCH 1 ΦA BAD ST	Disconnect switch 1 phase A bad status is detected (discrepancy between the 89/a and 89/b contacts)
	SWITCH 1 ΦA INTERM	Disconnect switch 1 phase A intermediate status is detected (transition from one position to another)
	SWITCH 1 ΦB CLSD	Disconnect switch 1 phase B is closed
	SWITCH 1 ΦB OPEN	Disconnect switch 1 phase B is open
	SWITCH 1 ΦB BAD ST	Disconnect switch 1 phase B bad status is detected (discrepancy between the 89/a and 89/b contacts)
	SWITCH 1 ΦB INTERM	Disconnect switch 1 phase B intermediate status is detected (transition from one position to another)
	SWITCH 1 ΦC CLSD	Disconnect switch 1 phase C is closed
	SWITCH 1 ΦC OPEN	Disconnect switch 1 phase C is open
	SWITCH 1 ΦC BAD ST	Disconnect switch 1 phase C bad status is detected (discrepancy between the 89/a and 89/b contacts)
	SWITCH 1 ΦC INTERM	Disconnect switch 1 phase C intermediate status is detected (transition from one position to another)
	SWITCH 1 BAD STATUS	Disconnect switch 1 bad status is detected on any pole
	SWITCH 1 TAG ON	Switch 1 tagged so manual trip and close is blocked
	SWITCH 1 TAG OFF	Switch 1 not tagged
	SWITCH 1 SUBD CLSD	Switch 1 status manually substituted to closed
	SWITCH 1 SUBD OPEN	Switch 1 status manually substituted to open
	SWITCH 1 BYPASS ON	Switch 1 control interlocking is bypassed manually
	SWITCH 1 BYPASS OFF	Switch 1 control interlocking is not bypassed manually
	SWITCH 2 to 24	Same set of operands as shown for SWITCH 1
ELEMENT: Synchrocheck	SYNC1 DEAD S OP	Synchrocheck 1 dead source has operated
	SYNC1 DEAD S DPO	Synchrocheck 1 dead source has dropped out
	SYNC1 SYNC OP	Synchrocheck 1 in synchronization has operated
	SYNC1 SYNC DPO	Synchrocheck 1 in synchronization has dropped out
	SYNC1 CLS OP	Synchrocheck 1 close has operated
	SYNC1 CLS DPO	Synchrocheck 1 close has dropped out
	SYNC1 V1 ABOVE MIN	Synchrocheck 1 V1 is above the minimum live voltage
	SYNC1 V1 BELOW MAX	Synchrocheck 1 V1 is below the maximum dead voltage
	SYNC1 V2 ABOVE MIN	Synchrocheck 1 V2 is above the minimum live voltage
	SYNC1 V2 BELOW MAX	Synchrocheck 1 V2 is below the maximum dead voltage
	SYNC1 S-CLOSE OP	Synchrocheck 1 S-CLOSE has operated
	SYNC1 S-CLOSE OP DPO	Synchrocheck 1 S-CLOSE has dropped out
	SYNC1 S-CLOSE ARMD	Synchrocheck 1 S-CLOSE has been armed
	SYNC1 VOLT DIFF PKP	Synchrocheck 1 voltage difference is below setpoint
	SYNC1 FREQ DIFF PKP	Synchrocheck 1 frequency difference is below setpoint
	SYNC1 ANG DIFF PKP	Synchrocheck 1 angle difference is below setpoint
	SYNC 2 to 6	Same set of operands as shown for SYNC 1
ELEMENT: Teleprotection channel tests	TELEPRO CH1 FAIL	Channel 1 failed
	TELEPRO CH2 FAIL	Channel 2 failed
	TELEPRO CH1 ID FAIL	The ID check for a peer relay on channel 1 has failed
	TELEPRO CH2 ID FAIL	The ID check for a peer relay on channel 2 has failed
	TELEPRO CH1 CRC FAIL	CRC detected packet corruption on channel 1
	TELEPRO CH2 CRC FAIL	CRC detected packet corruption on channel 2
	TELEPRO CH1 PKT LOST	CRC detected lost packet on channel 1
	TELEPRO CH2 PKT LOST	CRC detected lost packet on channel 2
ELEMENT: Teleprotection inputs/outputs	TELEPRO INPUT 1-1 On ↓ TELEPRO INPUT 1-16 On TELEPRO INPUT 2-1 On ↓ TELEPRO INPUT 2-16 On	Flag is set, Logic =1 ↓ Flag is set, Logic =1 Flag is set, Logic =1 ↓ Flag is set, Logic =1
ELEMENT: Thermal overload protection	THERMAL PROT 1 PKP	Thermal overload protection 1 picked up
	THERMAL PROT 1 OP	Thermal overload protection 1 operated
	THERMAL PROT 1 ALARM	Thermal protection 1 has reached the selected alarm level

Operand type	Operand syntax	Operand description
	THERMAL PROT 2	Same set of operands as shown for THERMAL PROT 1
ELEMENT: Trip bus	TRIP BUS 1 PKP TRIP BUS 1 OP	Asserted when the trip bus 1 element picks up Asserted when the trip bus 1 element operates
	TRIP BUS 2 to 6	Same set of operands as shown for TRIP BUS 1
ELEMENT: Underfrequency	UNDERFREQ 1 PKP UNDERFREQ 1 OP UNDERFREQ 1 DPO	Underfrequency 1 has picked up Underfrequency 1 has operated Underfrequency 1 has dropped out
	UNDERFREQ 2 to 6	Same set of operands as shown for UNDERFREQ 1
FIXED OPERANDS	Off	Logic = 0. Does nothing and can be used as a delimiter in an equation list; used as 'Disable' by other features.
	On	Logic = 1. Can be used as a test setting.
INPUTS/OUTPUTS: Contact inputs	Cont Ip 1 On Cont Ip 2 On ↓ Cont Ip 1 Off Cont Ip 2 Off ↓ Cont Ip 120 On Cont Ip 120 Off	(does not appear unless ordered) (does not appear unless ordered) ↓ (does not appear unless ordered) (does not appear unless ordered) ↓ (does not appear unless ordered) (does not appear unless ordered)
INPUTS/OUTPUTS: Contact outputs, current (from detector on form-A output only)	Cont Op 1 IOn Cont Op 2 IOn ↓ Cont Op 72 IOn	(does not appear unless ordered) (does not appear unless ordered) ↓ (does not appear unless ordered)
INPUTS/OUTPUTS: Contact outputs, voltage (from detector on form-A output only)	Cont Op 1 VOn Cont Op 2 VOn ↓ Cont Op 72 VOn	(does not appear unless ordered) (does not appear unless ordered) ↓ (does not appear unless ordered)
	Cont Op 1 VOff Cont Op 2 VOff ↓ Cont Op 72 VOff	(does not appear unless ordered) (does not appear unless ordered) ↓ (does not appear unless ordered)
INPUTS/OUTPUTS: Direct analog inputs	DIR ANA 1 DEADBAND DIR ANA 1 FORCE DIR ANA 1 INTEGRITY	A deadband has triggered direct analog input 1 A user force operand has triggered direct analog input 1 An integrity timeout has triggered direct analog input 1
	DIR ANA 2 to 32	Same set of operands as per DIRECT ANA 1
INPUTS/OUTPUTS: Direct inputs	DIRECT INPUT 1 On ↓ DIRECT INPUT 64 On	Flag is set, logic=1 ↓ Flag is set, logic=1
INPUTS/OUTPUTS: RxGOOSE DPS	RxG DPS 1 BAD RxG DPS 1 INTERM RxG DPS 1 OFF RxG DPS 1 ON	Asserted while the RxGOOSE double-point status input is in the bad state Asserted while the RxGOOSE double-point status input is in the intermediate state Asserted while the RxGOOSE double-point status input is off Asserted while the RxGOOSE double-point status input is on
	RxG DPS 2 to 16	Same set of operands as per RxG DPS 1
INPUTS/OUTPUTS: RxGOOSE Booleans	RxG Bool 1 On RxG Bool 2 On RxG Bool 3 On ↓ RxG Bool 256 On	Flag is set, logic=1 Flag is set, logic=1 Flag is set, logic=1 ↓ Flag is set, logic=1
INPUTS/OUTPUTS: Fixed GOOSE	FG REM DEV1 On FG REM DEV1 Off FG REM IN1 On Osc Fixed GOOSE	Remote Device 1 messages are being received Remote Device 1 messages are not being received Remote Input 1 status is "true" One or more operands configured in DNA and UserSt bit pair are oscillating
INPUTS/OUTPUTS: Virtual inputs	Virt Ip 1 On Virt Ip 2 On Virt Ip 3 On ↓ Virt Ip 128 On	Flag is set, logic=1 Flag is set, logic=1 Flag is set, logic=1 ↓ Flag is set, logic=1

Operand type	Operand syntax	Operand description
INPUTS/OUTPUTS: Virtual outputs	Virt Op 1 On Virt Op 2 On Virt Op 3 On ↓ Virt Op 256 On	Flag is set, logic=1 Flag is set, logic=1 Flag is set, logic=1 ↓ Flag is set, logic=1
LED INDICATORS: Enhanced and basic front panels	LED IN SERVICE LED TROUBLE LED TEST MODE LED TRIP LED ALARM LED PICKUP LED VOLTAGE LED CURRENT LED FREQUENCY LED OTHER LED PHASE A LED PHASE B LED PHASE C LED NEUTRAL/GROUND	Asserted when the front panel IN SERVICE LED is on Asserted when the front panel TROUBLE LED is on Asserted when the front panel TEST MODE LED is on Asserted when the front panel TRIP LED is on Asserted when the front panel ALARM LED is on Asserted when an element picks up and to turn PICKUP LED on Asserted when a voltage element involved and to turn VOLTAGE LED on Asserted when a current element involved and to turn CURRENT LED on Asserted when a frequency element involved and to turn FREQUENCY LED on Asserted when a composite element involved and to turn OTHER LED on Asserted when phase A involved and to turn PHASE A LED on Asserted when phase B involved and to turn PHASE B LED on Asserted when phase C involved and to turn PHASE C LED on Asserted when a neutral or ground element involved and to turn NEUTRAL/ GROUND LED on
LED INDICATORS: Graphical front panel	LED IN SERVICE LED TROUBLE LED TEST MODE LED TRIP LED ALARM LED PICKUP LED VOLTAGE LED CURRENT LED FREQUENCY LED OTHER LED PHASE A LED PHASE B LED PHASE C LED NEUTRAL/GROUND	Asserted when the front panel IN SERVICE LED is on Asserted when the front panel TROUBLE LED is on Asserted when the front panel TEST MODE LED is on Asserted when the front panel TRIP LED is on Asserted when the front panel ALARM LED is on Asserted when an element picks up and to turn Event Cause LED 1 on by default Asserted when a voltage element involved and to turn Event Cause LED 2 on by default Asserted when a current element involved and to turn Event Cause LED 3 on by default Asserted when a frequency element involved and to turn Event Cause LED 4 on by default Asserted when a composite element involved and to turn Event Cause LED 5 on by default Asserted when phase A involved and to turn Event Cause LED 6 on by default Asserted when phase B involved and to turn Event Cause LED 7 on by default Asserted when phase C involved and to turn Event Cause LED 8 on by default Asserted when a neutral or ground element involved and to turn Event Cause LED 9 on by default
LED INDICATORS: LED test	LED TEST IN PROGRESS	An LED test has been initiated and has not finished
LED INDICATORS: User-programmable LEDs Enhanced and basic front panels	LED USER 1	Asserted when user-programmable LED 1 is on
	LED USER 2 to 48	The operand above is available for user-programmable LEDs 2 through 48
LED INDICATORS: User-programmable LEDs Graphical front panel	EVENT CAUSE LED 1	Asserted when event cause LED 1 is on
	EVENT CAUSE LED 2 to 9	Same operand as EVENT CAUSE LED 1

Operand type	Operand syntax	Operand description
PASSWORD SECURITY	ACCESS LOC SETG OFF ACCESS LOC SETG ON ACCESS LOC CMND OFF ACCESS LOC CMND ON ACCESS REM SETG OFF ACCESS REM SETG ON ACCESS REM CMND OFF ACCESS REM CMND ON UNAUTHORIZED ACCESS UNAUTH FW ATTEMPT LOC SET ACCS AUT OFF LOC SET ACCS AUT ON REM SET ACCS AUT OFF REM SET ACCS AUT ON	Asserted when local setting access is disabled Asserted when local setting access is enabled Asserted when local command access is disabled Asserted when local command access is enabled Asserted when remote setting access is disabled Asserted when remote setting access is enabled Asserted when remote command access is disabled Asserted when remote command access is enabled Asserted when a password entry fails while accessing a password protected level of the N60 Firmware upgrade attempted when **LOCK FIRMWARE** setting is Enabled Dual-Permission local access settings authorization is off Dual-Permission local access settings authorization is on Dual-Permission remote access settings authorization is off Dual-Permission remote access settings authorization is on
PROCESS BUS MODULE (order code 85, 86, 87)	PBEthPort-1 Offline RxSV1 On RxSV1 Off RxSV1 Lost On RxSV1 Lost Off RxSV1 Delay Alarm On RxSV1 Delay Alarm Off RxSV1 SimBit On RxSV1 SimBit Off RxSV1 SynChk Fail RxSV1 SynChk OK RxSV# GmIdChk Fail RxSV# GmIdChk OK RxSV1 QualChk Fail RxSV1 QualChk OK Dlyd Processing On Dlyd Processing Off SV1 Processing Fail SV1 Processing OK ACBank1 Orig1 in Use ACBank1 Orig2 in Use SV TRBL PARTIAL BLK SV TRBL GLOBAL BLK SV TRBL Cont Op BLKD	Process Bus Module port 1 failure RxSV1 stream is online (messages are received and accepted) RxSV1 stream is offline (SV are received but not accepted or SV frames are not received) RxSV1 stream is completely lost (SV stream frames are not received) RxSV1 stream message delay is below the configured delay RxSV1 stream message that delay exceeds the configured delay RxSV1 stream message that delay is below the configured delay RxSV1 messages are received with simulation bit TRUE, while "Accept Sim GOOSE&SV" setting is Enabled RxSV1 messages are received with Sim bit FALSE, or "Accept Sim GOOSE&SV" is set to Disabled RxSV1 message that the synchronization source check failed RxSV1 message synchronization source check successful RxSV# message GM Identity doesn't match with the Reference GM ID RxSV# message GM Identity matches with the Reference GM ID RxSV1 message that at least one channel quality check failed RxSV1 message that the quality check of all channels successful Analog data from at least one of the SV streams is delayed in oscillography record Analog data from none of the SV streams is delayed in Oscillography record No frame received from RxSV1 stream or received sample processing failed Frame received from RxSV1 stream and sample successfully processed ACBank1 is using Origin1 SV stream ACBank1 is using Origin2 SV stream Partial blocking of UR elements applied due to SV stream trouble Global blocking of UR elements applied due to SV stream trouble Contact outputs are blocked due to SV stream trouble
RxGOOSE	RxGOOSE 1 On ↓ RxGOOSE 64 On	Flag is set, logic=1 ↓ Flag is set, logic=1
	RxGOOSE 1 Off ↓ RxGOOSE 64 Off	Flag is set, logic=1 ↓ Flag is set, logic=1
	<RxGOOSE Boolean1 ID> On <RxGOOSE DPS1 ID> Bad <RxGOOSE DPS1 ID> Interm <RxGOOSE DPS1 ID> Off <RxGOOSE DPS1 ID> On RxGOOSE Analog1 Expn St RxGOOSE INVLD ON RxGOOSE QUES ON	Replace bracketed text with RxGOOSE Boolean1 status of "true" Replace bracketed text with RxGOOSE DPS1 status of "bad-state" Replace bracketed text with RxGOOSE DPS1 status is "intermediate-state" Replace bracketed text with RxGOOSE DPS1 status is "off" Replace bracketed text with RxGOOSE DPS1 status is "on" RxGOOSE Analog In1 Expression status One or more Rx GOOSE Inputs are received with Invalid quality One or more Rx GOOSE Inputs are received with questionable quality
RESETTING	RESET OP RESET OP (COMMS) RESET OP (OPERAND) RESET OP (PUSHBUTTON) RESET ANCTR OP RESET ANCTR OP(OPRD) RESET ANCTR OP(MNUL)	Reset command is operated (set by all three operands below) Communications source of the reset command Operand (assigned in the **INPUTS/OUTPUTS ⇨⇩ RESETTING** menu) source of the reset command Reset key (pushbutton) source of the reset command Reset annunciator command is operated (set by any operands below) Reset operand (assigned in **INPUTS/OUTPUTS ⇨⇩ RESETTING ANNUNCIATOR** menu) source of the reset annunciator command Reset manual (pushbutton or EnerVista software) source of the reset annunciator command

Operand type	Operand syntax	Operand description
GRAPHICAL FRONT PANEL	ENABLE CTRL FROM GFP	Controls enabled when operand assigned to **Enable Controls From GFP** setting is ON. An **Enable Control** side pushbutton displays, which displays other side pushbuttons. Disabled otherwise, and **Enable Control** side pushbutton does not display.
SELF-DIAGNOSTICS (See Relay Self-tests descriptions in Chapter 7: Commands and Targets)	ANY MAJOR ERROR ANY MINOR ERROR ANY SELF-TESTS BATTERY FAIL CLOCK UNSYNCHRONIZED DIRECT DEVICE OFF DIRECT RING BREAK EQUIPMENT MISMATCH FLEXLOGIC ERR TOKEN IRIG-B FAILURE LATCHING OUT ERROR MAINTENANCE ALERT FIRST ETHERNET FAIL PROCESS BUS FAILURE PTP FAILURE RxGOOSE OFF RRTD COMM FAIL SECOND ETHERNET FAIL THIRD ETHERNET FAIL SNTP FAILURE SYSTEM EXCEPTION TEMP MONITOR UNIT NOT PROGRAMMED SETTING CHANGED PROCESS BUS PTP FAILURE PB-CPU CLK MISMATCH PB CLOCK UNSYNCD	Any of the major self-test errors generated (major error) Any of the minor self-test errors generated (minor error) Any self-test errors generated (generic, any error) The battery is weak or not functioning. Replace as outlined in the Maintenance chapter. Relay is not synchronized to the international time standard A direct device is configured but not connected The Direct I/O settings is for a connection that is not in a ring The configuration of modules does not match the stored order code A FlexLogic equation is incorrect "Bad IRIG-B Signal" self-test. See Chapter 7: Commands and Targets. A difference is detected between the desired and actual latch contact state A subset of the minor self-test errors generated, see Chapter 7 Link failure detected. See description in Chapter 7: Commands and Targets. See description in Chapter 7: Commands and Targets "Bad PTP Signal" self-test as described in Chapter 7 One or more GOOSE messages are not being received See description in Chapter 7: Commands and Targets See description in Chapter 7: Commands and Targets See description in Chapter 7: Commands and Targets SNTP server is not responding See description in Chapter 7: Commands and Targets Monitors ambient temperature and maximum operating temperature The product **SETUP > INSTALLATION > RELAYS SETTINGS** setting is not programmed Any device settings changed over any available interface; operand is asserted for at least one second and then self-reset No grandmaster clock available on any of the Process Bus Module ports Process Bus Module and main CPU clocks are free-running independently and the clocks are deviating more than 100 micro seconds. Resets when the deviation is below 100 micro seconds. Process Bus Module clock is free-running, that is, when both PTP grandmaster clock on Process Bus Module and one pulse per second (PPS) from main CPU are not available. Resets when any of the references is available.
REAL-TIME CLOCK	LEAP SECOND DETECTED LEAP SECOND ADDED	Leap second adjustment has been applied. Leap second has been added to real-time clock
SIMULATION	TxGOOSE SIM ON IED IN SIM MODE ON IED IN SIM MODE OFF	Sim bit enabled in all Tx GOOSE Relay is in simulation mode and accepts simulated GOOSE and SV values Relay is not in simulation mode and does not accept simulated GOOSE and SV values
TEMPERATURE MONITOR	TEMP MONITOR	Asserted while the ambient temperature is greater than the maximum operating temperature (80°C)
USER-PROGRAMMABLE PUSHBUTTONS	PUSHBUTTON 1 ON PUSHBUTTON 1 OFF ANY PB ON	Pushbutton number 1 is in the "On" position Pushbutton number 1 is in the "Off" position Any of 12 pushbuttons is in the "On" position
	PUSHBUTTON 2 to 6, 12, 16, or 48 depending on front panel	Same set of operands as PUSHBUTTON 1

Some operands can be re-named. These are the names of the breakers in the breaker control feature, the ID (identification) of contact inputs and outputs, the ID of virtual inputs, and the ID of virtual outputs. If the user changes the default name or ID of any of these operands, the assigned name appears in the relay list of operands. The default names are shown in the FlexLogic operands table.

The characteristics of the logic gates are tabulated in the following table, and the operators available in FlexLogic are listed in the FlexLogic operators table.

Table 5-28: FlexLogic gate characteristics

Gates	Number of inputs	Output is '1' (= ON) if...
NOT	1	input is '0'
OR	2 to 16	any input is '1'
AND	2 to 16	all inputs are '1'
NOR	2 to 16	all inputs are '0'
NAND	2 to 16	any input is '0'
XOR	2	only one input is '1'

Table 5-29: FlexLogic operators

Type	Syntax	Description	Notes
Editor	INSERT	Insert a parameter in an equation list	
	DELETE	Delete a parameter from an equation list	
End	END	The first END encountered signifies the last entry in the list of processed FlexLogic parameters	
One-shot	POSITIVE ONE SHOT	One shot that responds to a positive going edge	A 'one shot' refers to a single input gate that generates a pulse in response to an edge on the input. The output from a 'one shot' is True (positive) for only one pass through the FlexLogic equation. There is a maximum of 64 'one shots.'
	NEGATIVE ONE SHOT	One shot that responds to a negative going edge	
	DUAL ONE SHOT	One shot that responds to both the positive and negative going edges	
Logic gate	NOT	Logical NOT	Operates on the previous parameter
	OR(2) ↓ OR(16)	2 input OR gate ↓ 16 input OR gate	Operates on the 2 previous parameters ↓ Operates on the 16 previous parameters
	AND(2) ↓ AND(16)	2 input AND gate ↓ 16 input AND gate	Operates on the 2 previous parameters ↓ Operates on the 16 previous parameters
	NOR(2) ↓ NOR(16)	2 input NOR gate ↓ 16 input NOR gate	Operates on the 2 previous parameters ↓ Operates on the 16 previous parameters
	NAND(2) ↓ NAND(16)	2 input NAND gate ↓ 16 input NAND gate	Operates on the 2 previous parameters ↓ Operates on the 16 previous parameters
	XOR(2)	2 input Exclusive OR gate	Operates on the 2 previous parameters
	LATCH (S,R)	Latch (set, reset): reset-dominant	The parameter preceding LATCH(S,R) is the reset input. The parameter preceding the reset input is the set input.
Timer	TIMER 1 ↓ TIMER 32	Timer set with FlexLogic timer 1 settings ↓ Timer set with FlexLogic timer 32 settings	The timer is started by the preceding parameter. The output of the timer is TIMER #.
Assign virtual output	= Virt Op 1 ↓ = Virt Op 256	Assigns previous FlexLogic operand to virtual output 1 ↓ Assigns previous FlexLogic operand to virtual output 256	The virtual output is set by the preceding parameter

5.7.2 FlexLogic rules

When forming a FlexLogic equation, the sequence in the linear array of parameters must follow these general rules:

1. Operands must precede the operator that uses the operands as inputs.
2. Operators have only one output. The output of an operator must be used to create a virtual output if it is to be used as an input to two or more operators.
3. Assigning the output of an operator to a virtual output terminates the equation.
4. A timer operator (for example, "TIMER 1") or virtual output assignment (for example, " = Virt Op 1") can be used once

only. If this rule is broken, a syntax error is declared.

5.7.3 FlexLogic evaluation

Each equation is evaluated in the ascending order in which the parameters have been entered.

NOTE

FlexLogic provides built-in latches that by definition have a memory action, remaining in the set state after the set input has been asserted. These built-in latches are reset dominant, meaning that if logical "1" is applied to both set and reset entries simultaneously, then the output of the latch is logical "0." However, they are volatile, meaning that they reset upon removal of control power.

When making changes to FlexLogic entries in the settings, all FlexLogic equations are re-compiled whenever any new FlexLogic entry value is entered, and as a result of the re-compile all latches are reset automatically.

To implement FlexLogic using a graphical user interface, see the FlexLogic Design and Monitoring using Engineer section in the previous chapter.

5.7.4 FlexLogic example

This section provides an example of logic implementation for a typical application. The sequence of steps is important to minimize the work to develop the relay settings. Note that the example in the following figure demonstrates the procedure, not to solve a specific application situation.

Note that there is also a graphical interface with which to draw logic and populate FlexLogic equation entries. See the Engineer content at the end of the previous chapter.

In the example, it is assumed that logic has already been programmed to produce virtual outputs 1 and 2, and is only a part of the full set of equations used. When using FlexLogic, it is important to make a note of each virtual output used; a virtual output designation (1 to 256) can be assigned only once.

Figure 5-120: Logic example

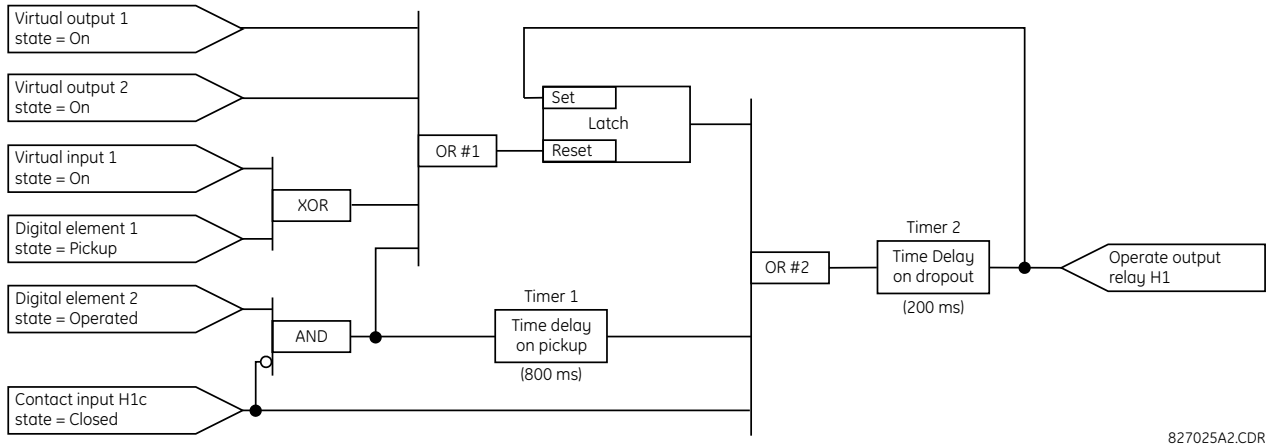

1. Inspect the example logic diagram to determine if the required logic can be implemented with the FlexLogic operators. If this is not possible, the logic must be altered until this condition is satisfied. Once done, count the inputs to each gate to verify that the number of inputs does not exceed the FlexLogic limits, which is unlikely but possible. If the number of inputs is too high, subdivide the inputs into multiple gates to produce an equivalent. For example, if 25 inputs to an AND gate are required, connect Inputs 1 through 16 to AND(16), 17 through 25 to AND(9), and the outputs from these two gates to AND(2).

   Inspect each operator between the initial operands and final virtual outputs to determine if the output from the operator is used as an input to more than one following operator. If so, the operator output must be assigned as a virtual output.

For the example shown, the output of the AND gate is used as an input to both OR#1 and Timer 1, and must therefore be made a virtual output and assigned the next available number (that is, Virtual Output 3). The final output must also be assigned to a virtual output as virtual output 4, which is programmed in the contact output section to operate relay H1 (that is, contact output H1).

Therefore, the required logic can be implemented with two FlexLogic equations with outputs of virtual output 3 and virtual output 4, shown as follows.

Figure 5-121: Logic example with virtual outputs

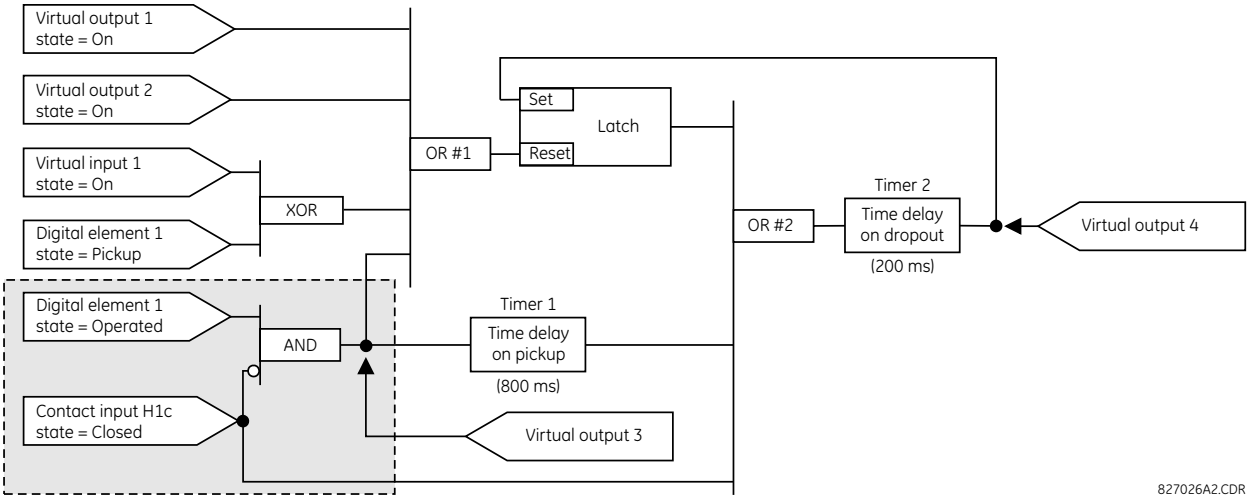

2. Prepare a logic diagram for the equation to produce virtual output 3, as this output is used as an operand in the virtual output 4 equation (create the equation for every output that is used as an operand first, so that when these operands are required they already have been evaluated and assigned to a specific virtual output). The logic for virtual output 3 is shown as follows with the final output assigned.

Figure 5-122: Logic for virtual output 3

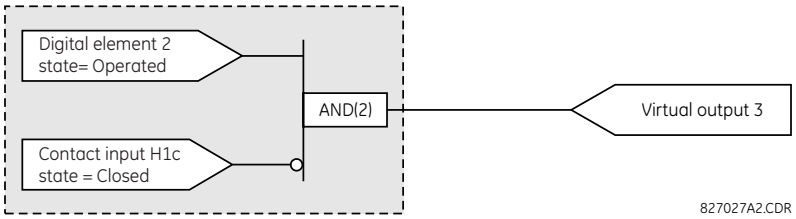

3. Prepare a logic diagram for virtual output 4, replacing the logic ahead of virtual output 3 with a symbol identified as virtual output 3, shown as follows.

Figure 5-123: Logic for virtual output 4

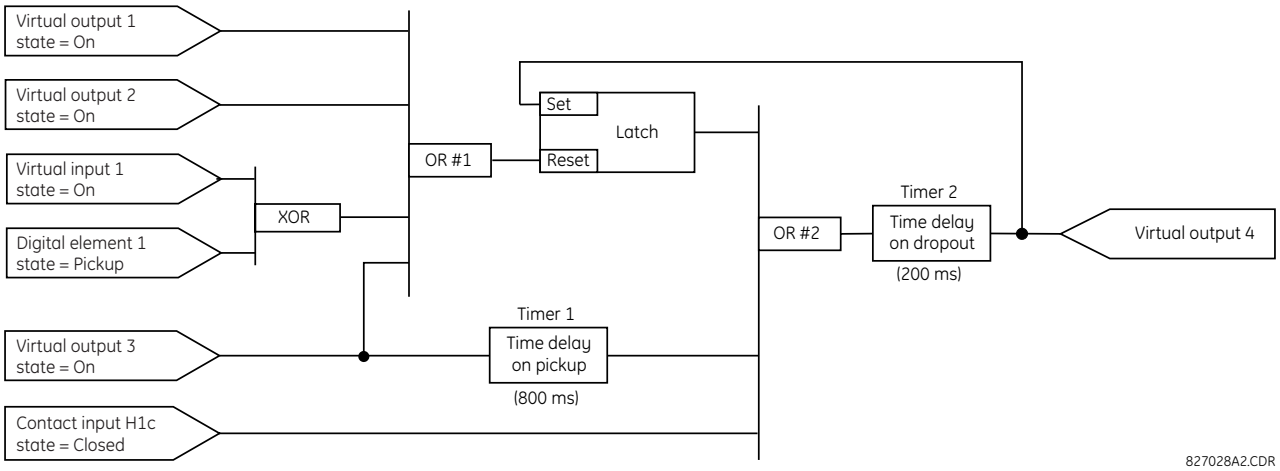

4. Program the FlexLogic equation for virtual output 3 by translating the logic into available FlexLogic parameters. The equation is formed one parameter at a time until the required logic is complete. It is generally easier to start at the output end of the equation and work back towards the input, as shown in the following steps. It is also recommended to list operator inputs from bottom to top. For demonstration, the final outputs are arbitrarily identified as parameter 99, and each preceding parameter decremented by one in turn. Until accustomed to using FlexLogic, it is suggested that a worksheet with a series of cells marked with the arbitrary parameter numbers be prepared shown as follows.

Figure 5-124: FlexLogic worksheet

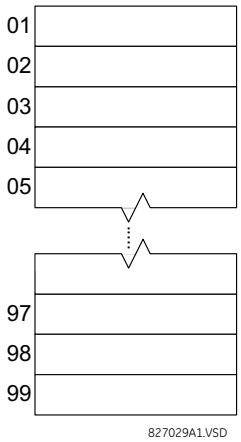

5. Following the procedure outlined, start with parameter 99, as follows:
   - 99: The final output of the equation is virtual output 3, which is created by the operator "= Virt Op n". This parameter is therefore "= Virt Op 3".
   - 98: The gate preceding the output is an AND, which in this case requires two inputs. The operator for this gate is a 2-input AND so the parameter is “AND(2)”. Note that FlexLogic rules require that the number of inputs to most types of operators must be specified to identify the operands for the gate. As the 2-input AND operates on the two operands preceding it, these inputs must be specified, starting with the lower.
   - 97: This lower input to the AND gate must be passed through an inverter (the NOT operator) so the next parameter is “NOT”. The NOT operator acts upon the operand immediately preceding it, so specify the inverter input next.
   - 96: The input to the NOT gate is to be contact input H1c. The ON state of a contact input can be programmed to be set when the contact is either open or closed. Assume for this example that the state is to be ON for a closed contact. The operand is therefore “Cont Ip H1c On”.

- 95: The last step in the procedure is to specify the upper input to the AND gate, the operated state of digital element 2. This operand is "DIG ELEM 2 OP".

Writing the parameters in numerical order forms the equation for virtual output 3:

```
[95] DIG ELEM 2 OP
[96] Cont Ip H1c On
[97] NOT
[98] AND(2)
[99] = Virt Op 3
```

It is now possible to check that this selection of parameters produces the required logic by converting the set of parameters into a logic diagram. The result of this process is shown in the figure, which is compared to the logic for virtual output 3 diagram as a check.

Figure 5-125: FlexLogic equation for virtual output 3

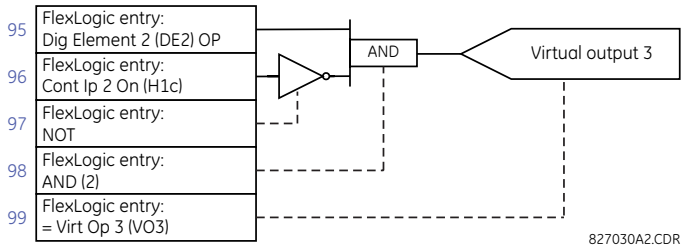

6. Repeating the process described for virtual output 3, select the FlexLogic parameters for Virtual Output 4.
   - 99: The final output of the equation is virtual output 4, which is parameter "= Virt Op 4".
   - 98: The operator preceding the output is timer 2, which is operand "TIMER 2". Note that the settings required for the timer are established in the timer programming section.
   - 97: The operator preceding timer 2 is OR #2, a 3-input OR, which is parameter "OR(3)".
   - 96: The lowest input to OR #2 is operand "Cont Ip H1c On".
   - 95: The center input to OR #2 is operand "TIMER 1".
   - 94: The input to timer 1 is operand "Virt Op 3 On".
   - 93: The upper input to OR #2 is operand "LATCH (S,R)".
   - 92: There are two inputs to a latch, and the input immediately preceding the latch reset is OR #1, a 4-input OR, which is parameter "OR(4)".
   - 91: The lowest input to OR #1 is operand "Virt Op 3 On".
   - 90: The input just above the lowest input to OR #1 is operand "XOR(2)".
   - 89: The lower input to the XOR is operand "DIG ELEM 1 PKP".
   - 88: The upper input to the XOR is operand "Virt Ip 1 On".
   - 87: The input just below the upper input to OR #1 is operand "Virt Op 2 On".
   - 86: The upper input to OR #1 is operand "Virt Op 1 On".
   - 85: The last parameter is used to set the latch, and is operand "Virt Op 4 On".

The equation for virtual output 4 is:

```
[85] Virt Op 4 On
[86] Virt Op 1 On
[87] Virt Op 2 On
[88] Virt Ip 1 On
[89] DIG ELEM 1 PKP
[90] XOR(2)
[91] Virt Op 3 On
[92] OR(4)
[93] LATCH (S,R)
[94] Virt Op 3 On
[95] TIMER 1
[96] Cont Ip H1c On
```

```
[97] OR(3)
[98] TIMER 2
[99] = Virt Op 4
```

Now check that the selection of parameters produce the required logic by converting the set of parameters into a logic diagram. The result is shown in the figure, which is compared to the logic for virtual output 4 diagram as a check.

Figure 5-126: FlexLogic equation for virtual output 4

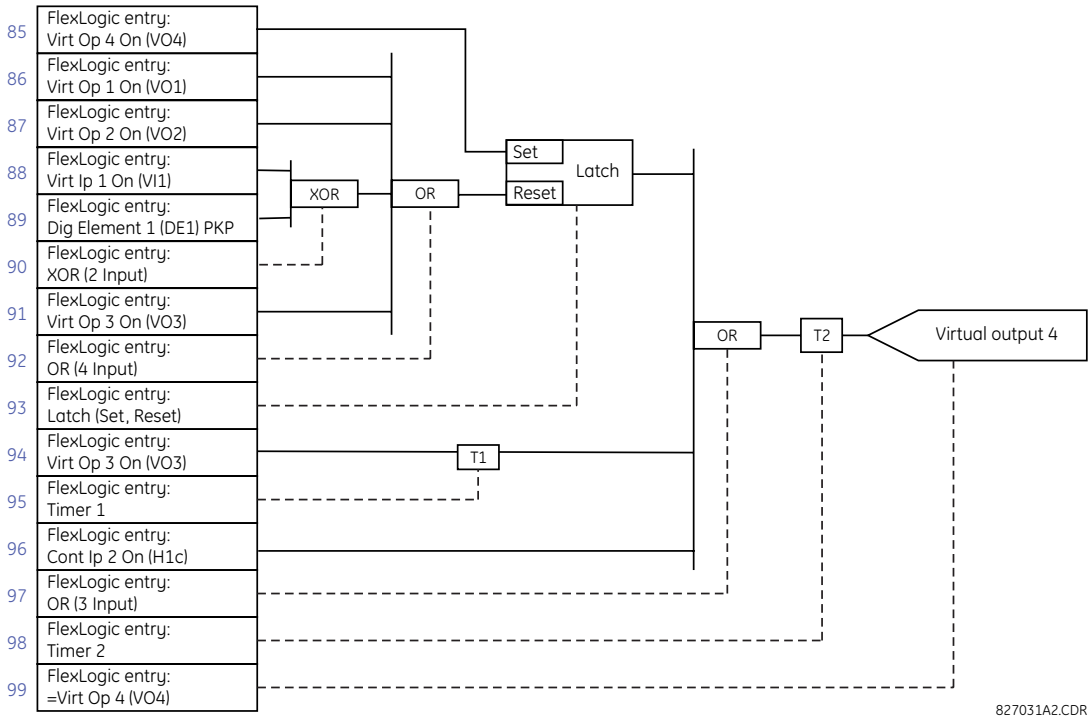

7. Now write the complete FlexLogic expression required to implement the logic, making an effort to assemble the equation in an order where Virtual Outputs that are used as inputs to operators are created before needed. In cases where a lot of processing is required to perform logic, this can be difficult to achieve, but in most cases does not cause problems as all logic is calculated at least four times per power frequency cycle. The possibility of a problem caused by sequential processing emphasizes the necessity to test the performance of FlexLogic before it is placed in service.

   In the following equation, virtual output 3 is used as an input to both latch 1 and timer 1 as arranged in the following order:

```
DIG ELEM 2 OP
Cont Ip H1c On
NOT
AND(2)
= Virt Op 3
Virt Op 4 On
Virt Op 1 On
Virt Op 2 On
Virt Ip 1 On
DIG ELEM 1 PKP
XOR(2)
Virt Op 3 On
OR(4)
LATCH (S,R)
Virt Op 3 On
TIMER 1
Cont Ip H1c On
OR(3)
```

```
TIMER 2
= Virt Op 4
END
```

In this expression, the virtual output 4 input to the four-input OR is listed before it is created. This is typical of a form of feedback, in this case, used to create a seal-in effect with the latch, and is correct.

8. Always test the logic after it is loaded into the relay, in the same way as has been used in the past. Testing can be simplified by placing an "END" operator within the overall set of FlexLogic equations. The equations are evaluated up to the first "END" operator.

   The "On" and "Off" operands can be placed in an equation to establish a known set of conditions for test purposes, and the "INSERT" and "DELETE" commands can be used to modify equations.

5.7.5 FlexLogic equation editor

SETTINGS ⇨⇩ FLEXLOGIC ⇨ FLEXLOGIC EQUATION EDITOR

■ FLEXLOGIC ■ EQUATION EDITOR	⇔	FLEXLOGIC ENTRY 1 END	Range: FlexLogic operands
		⇩	
	⇧	FLEXLOGIC ENTRY 1024 END	Range: FlexLogic operands

There are 1,024 FlexLogic entries available, numbered from 1 to 1024, with default END entry settings. If a “Disabled” element is selected as a FlexLogic entry, the associated state flag is never set to ‘1’. Press the **+/–** key when editing FlexLogic equations to quickly scan through the major parameter types.

There are two ways to create, edit and maintain the FlexLogic equations:

1. Using the FlexLogic Equation Editor available at **FlexLogic > FlexLogic Equation Editor**
2. Using the Logic Designer available at **Engineer > Logic Designer**

NOTE

EnerVista Engineer is *only* available through the offline window of the EnerVista UR Setup.
FlexLogic Equation Editor and Logic Designer are designed to be mutually exclusive as using them interchangeably to create, edit and maintain the FlexLogic equations may cause inconsistencies in the resulting equations. The user is recommended to use only one of the two methods throughout the process.

Please refer to the FlexLogic design using Engineer section in the Interfaces chapter for more information.

5.7.6 FlexLogic timers

SETTINGS ⇨⇩ FLEXLOGIC ⇨⇩ FLEXLOGIC TIMERS ⇨ FLEXLOGIC TIMER 1(64)

■ FLEXLOGIC ■ TIMER 1	⇔	TIMER 1 TYPE: millisecond	Range: millisecond, second, minute
	⇩	TIMER 1 PICKUP DELAY: 0	Range: 0 to 60000 in steps of 1
	⇧	TIMER 1 DROPOUT DELAY: 0	Range: 0 to 60000 in steps of 1

There are 64 identical FlexLogic timers available. These timers are used as operators for FlexLogic equations.

TIMER 1 TYPE — Selects the time measurement unit.

TIMER 1 PICKUP DELAY — Sets the time delay to pickup. If a pickup delay is not required, set this function to "0."

TIMER 1 DROPOUT DELAY — Sets the time delay to dropout. If a dropout delay is not required, set this function to "0."

5.7.7 FlexElements

SETTINGS ⇨⇩ FLEXLOGIC ⇨⇩ FLEXELEMENTS ⇨ FLEXELEMENT 1(16)

■ FLEXELEMENT 1 ■	⇔	FLEXELEMENT 1 FUNCTION: Disabled	Range: Disabled, Enabled
	⇩	FLEXELEMENT 1 NAME: FxE 1	Range: up to six alphanumeric characters
	⇩	FLEXELEMENT 1 +IN: Off	Range: Off, any analog actual value parameter
	⇩	FLEXELEMENT 1 -IN: Off	Range: Off, any analog actual value parameter
	⇩	FLEXELEMENT 1 INPUT MODE: SIGNED	Range: SIGNED, ABSOLUTE
	⇩	FLEXELEMENT 1 COMP MODE: LEVEL	Range: LEVEL, DELTA
	⇩	FLEXELEMENT 1 DIRECTION: OVER	Range: OVER, UNDER
	⇩	FLEXELEMENT 1 PICKUP: 1.000 pu	Range: –90.000 to 90.000 pu in steps of 0.001
	⇩	FLEXELEMENT 1 HYSTERESIS: 3.0%	Range: 0.1 to 50.0% in steps of 0.1
	⇩	FLEXELEMENT 1 dt UNIT: Milliseconds	Range: Milliseconds, Seconds, Minutes
	⇩	FLEXELEMENT 1 dt: 20	Range: 20 to 86400 in steps of 1
	⇩	FLEXELEMENT 1 PKP DELAY: 0.000 s	Range: 0.000 to 65.535 s in steps of 0.001
	⇩	FLEXELEMENT 1 RST DELAY: 0.000 s	Range: 0.000 to 65.535 s in steps of 0.001
	⇩	FLEXELEMENT 1 BLK: Off	Range: FlexLogic operand
	⇩	FLEXELEMENT 1 TARGET: Self-reset	Range: Self-reset, Disabled, Latched
	⇧	FLEXELEMENT 1 EVENTS: Disabled	Range: Disabled, Enabled

A FlexElement is a universal comparator used to monitor any analog actual value calculated by the relay or a net difference of any two analog actual values of the same type. The effective operating signal can be treated as a signed number or its absolute value can be used.

FlexElements run every half power cycle (every four protection passes).

The element can be programmed to respond either to a signal level or to a rate-of-change (delta) over a pre-defined period of time. The output operand is asserted when the operating signal is higher than a threshold or lower than a threshold, as per your choice.

Figure 5-127: FlexElement logic

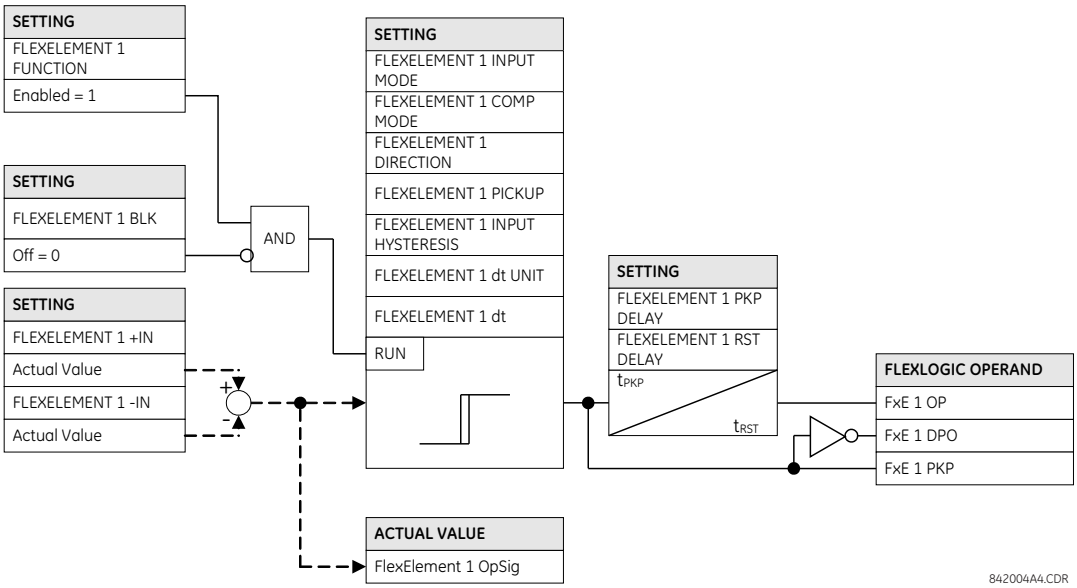

FLEXELEMENT 1 +IN — This setting specifies the first (non-inverted) input to the FlexElement. Zero is assumed as the input if this setting is set to "Off." For proper operation of the element, at least one input must be selected. Otherwise, the element does not assert its output operands.

NOTE

Filter the **InputPlus** or **InputMinus** field in the software by double-clicking it, then entering a value.

FLEXELEMENT 1 –IN — Specifies the second (inverted) input to the FlexElement. Zero is assumed as the input if this setting is set to "Off." For proper operation of the element, at least one input must be selected. Otherwise, the element does not assert its output operands. This input is used to invert the signal if needed for convenience, or to make the element respond to a differential signal, such as for a top-bottom oil temperature differential alarm. The element does not operate if the two input signals are of different types, for example if one tries to use active power and phase angle to build the effective operating signal.

The element responds directly to the differential signal if the **FLEXELEMENT 1 INPUT MODE** setting is set to "Signed" The element responds to the absolute value of the differential signal if this setting is set to "Absolute." Sample applications for the "Absolute" setting include monitoring the angular difference between two phasors with a symmetrical limit angle in both directions, monitoring power regardless of its direction, or monitoring a trend.

The element responds directly to its operating signal—as defined by the **FLEXELEMENT 1 +IN**, **FLEXELEMENT 1 –IN** and **FLEXELEMENT 1 INPUT MODE** settings—if the **FLEXELEMENT 1 COMP MODE** setting is set to "Level." The element responds to the rate of change of its operating signal if the **FLEXELEMENT 1 COMP MODE** setting is set to "Delta." In this case, the **FLEXELEMENT 1 dt UNIT** and **FLEXELEMENT 1 dt** settings specify how the rate of change is derived.

FLEXELEMENT 1 DIRECTION — Enables the relay to respond to either high or low values of the operating signal. The following figure explains the application of the **FLEXELEMENT 1 DIRECTION**, **FLEXELEMENT 1 PICKUP**, and **FLEXELEMENT 1 HYSTERESIS** settings.

Figure 5-128: FlexElement direction, pickup, and hysteresis

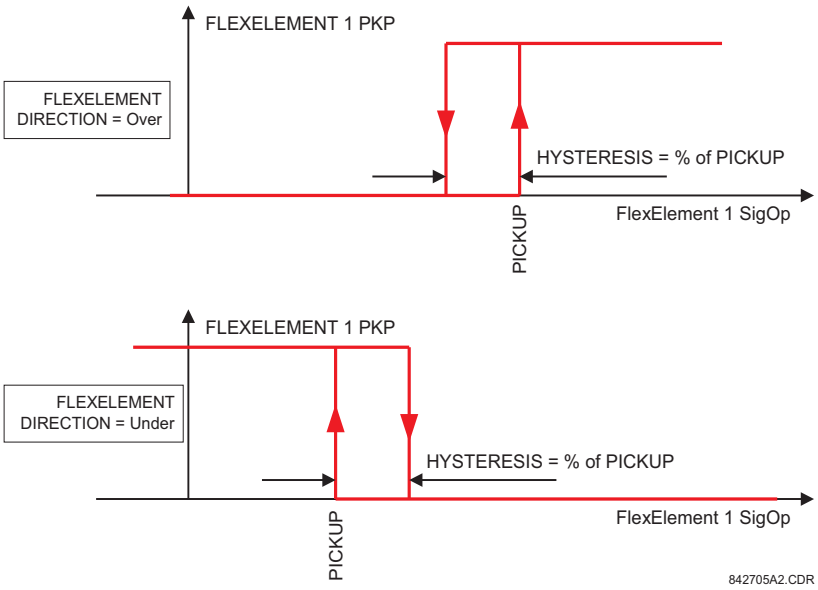

In conjunction with the **FLEXELEMENT 1 INPUT MODE** setting, the element can be programmed to provide two extra characteristics, as shown in the following figure.

Figure 5-129: FlexElement input mode setting

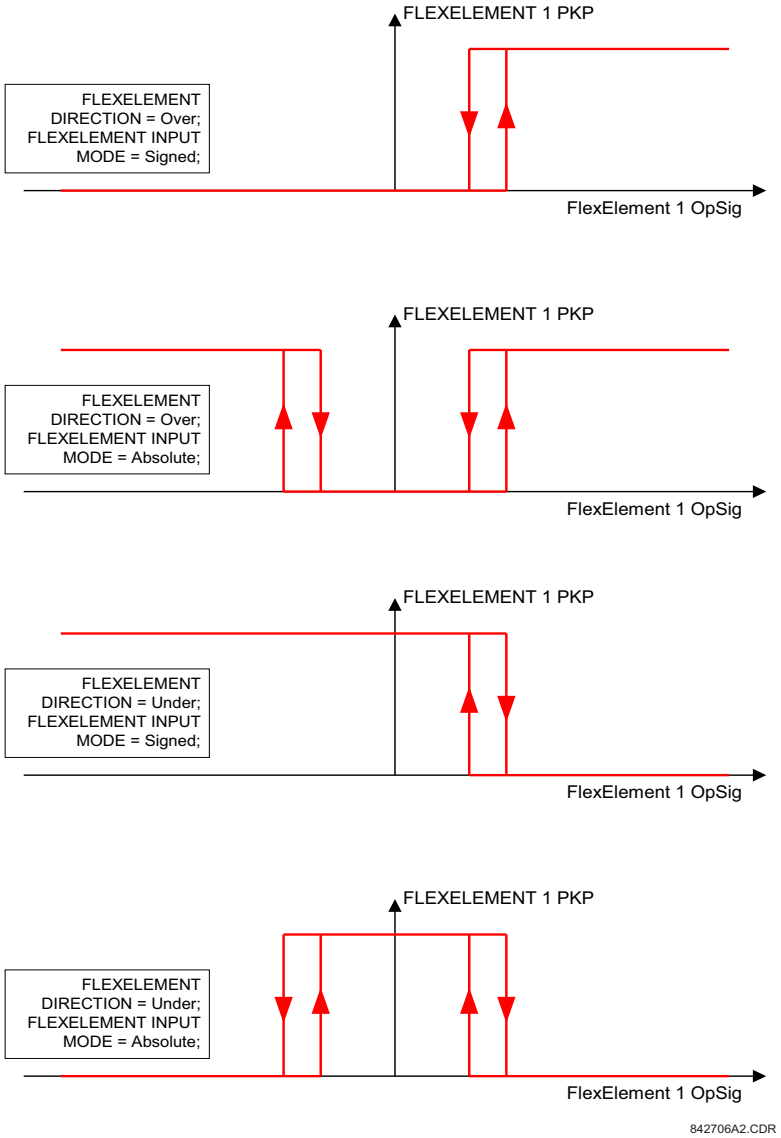

FLEXELEMENT 1 PICKUP — This setting specifies the operating threshold for the effective operating signal of the element. If set to "Over," the element picks up when the operating signal exceeds the **FLEXELEMENT 1 PICKUP** value. If set to "Under," the element picks up when the operating signal falls below the **FLEXELEMENT 1 PICKUP** value.

When using FlexElements for Voltage Elements, 1 pu is always equal to phase to ground voltage nominal secondary voltage, even if you select a phase to phase voltage as an operating quantity.

FLEXELEMENT 1 HYSTERESIS — This setting controls the element dropout. Notice that both the operating signal and the pickup threshold can be negative, facilitating applications such as reverse power alarm protection. The FlexElement can be programmed to work with all analog actual values measured by the relay. The **FLEXELEMENT 1 PICKUP** setting is entered in per-unit values using the following definitions of the base units.

Table 5-30: FlexElement base units

Unit	Description
DCmA	BASE = maximum value of the **DCMA INPUT MAX** setting for the two transducers configured under the +IN and –IN inputs
DELTA TIME	BASE = 1 μs

Unit	Description
FREQUENCY	f_{BASE} = 1 Hz
FREQUENCY RATE OF CHANGE	df/dt_{BASE} = 1 Hz/s
MSOD FREQ_OSC	1 Hz
MSOD MAG_OSC	1 pu
MSOD PHASE_OSC	360 degrees
MSOD DAMPR_OSC	1%
PHASE ANGLE	φ_{BASE} = 360 degrees (see the UR angle referencing convention)
POWER FACTOR	PF_{BASE} = 1.00
RTDs	BASE = 100°C
SENSITIVE DIR POWER (Sns Dir Power)	P_{BASE} = maximum value of $3 \times V_{BASE} \times I_{BASE}$ for the +IN and –IN inputs of the sources configured for the sensitive power directional element(s).
SOURCE CURRENT	I_{BASE} = maximum nominal primary RMS value of the +IN and –IN inputs
SOURCE ENERGY (Positive and Negative Watthours, Positive and Negative Varhours)	E_{BASE} = 10000 MWh or MVAh, respectively
SOURCE POWER	P_{BASE} = maximum value of $V_{BASE} \times I_{BASE}$ for the +IN and –IN inputs
SOURCE THD & HARMONICS	BASE = 1%
SOURCE VOLTAGE	V_{BASE} = maximum nominal primary RMS value of the +IN and –IN inputs
SYNCHROCHECK (Max Delta Volts)	V_{BASE} = maximum primary RMS value of all the sources related to the +IN and –IN inputs

FLEXELEMENT 1 HYSTERESIS — This setting defines the pickup–dropout relation of the element by specifying the width of the hysteresis loop as a percentage of the pickup value as shown in the FlexElement Direction, Pickup, and Hysteresis diagram.

FLEXELEMENT 1 dt UNIT — Specifies the time unit for the setting **FLEXELEMENT 1 dt**. This setting is applicable only if **FLEXELEMENT 1 COMP MODE** is set to "Delta."

FLEXELEMENT 1 dt — Specifies duration of the time interval for the rate of change mode of operation. This setting is applicable only if **FLEXELEMENT 1 COMP MODE** is set to "Delta."

FLEXELEMENT 1 PKP DELAY — Specifies the pickup delay of the element.

FLEXELEMENT 1 RST DELAY — Specifies the reset delay of the element.

5.7.8 Non-volatile latches

SETTINGS ⇨⇩ FLEXLOGIC ⇨⇩ NON-VOLATILE LATCHES

```
■ NON-VOLATILE
■ LATCH
```

⇔ ■ LATCH 1 ■

⇩ ■ LATCH 2 ■

⇩ ■ ... ■

⇧ ■ LATCH 16

SETTINGS ⇨⇩ FLEXLOGIC ⇨⇩ NON-VOLATILE LATCHES ⇨ LATCH 1 (16)

```
■ LATCH 1
■
```

⇔ **LATCH 1 FUNCTION: Disabled** — Range: Disabled, Enabled

⇩ **LATCH 1 ID: NV Latch 1** — Range: up to 20 alphanumeric characters

⇕	**LATCH 1 TYPE: Reset Dominant**	Range: Reset Dominant, Set Dominant
⇕	**LATCH 1 SET: Off**	Range: FlexLogic operand
⇕	**LATCH 1 RESET: Off**	Range: FlexLogic operand
⇕	**LATCH 1 TARGET: Self-reset**	Range: Self-reset, Latched, Disabled
⇧	**LATCH 1 EVENTS: Disabled**	Range: Disabled, Enabled

The non-volatile latches provide a permanent logical flag that is stored safely and do not reset upon restart after the relay is powered down. Typical applications include sustaining operator commands or permanently blocking relay functions, such as Autorecloser, until a deliberate interface action resets the latch.

LATCH 1 TYPE — This setting characterizes Latch 1 to be Set- or Reset-dominant.

LATCH 1 SET — If asserted, the specified FlexLogic operands 'sets' Latch 1.

LATCH 1 RESET — If asserted, the specified FlexLogic operand 'resets' Latch 1.

Figure 5-130: Non-volatile latch operation table (N = 1 to 16) and logic

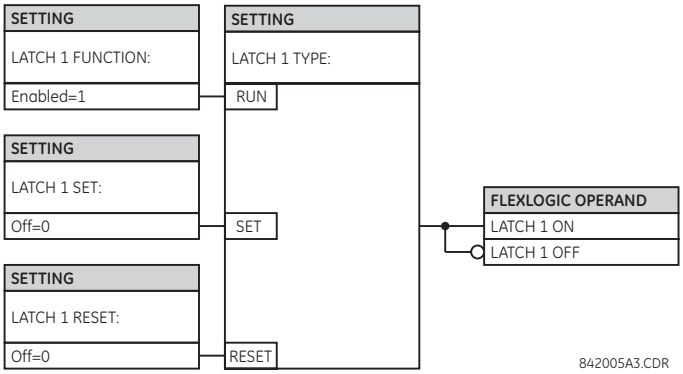

Latch n type	Latch n set	Latch n reset	Latch n on	Latch n off
Reset Dominant	ON	OFF	ON	OFF
	OFF	OFF	Previous State	Previous State
	ON	ON	OFF	ON
	OFF	ON	OFF	ON
Set Dominant	ON	OFF	ON	OFF
	ON	ON	ON	OFF
	OFF	OFF	Previous State	Previous State
	OFF	ON	OFF	ON

5.7.9 FlexMath

SETTINGS ⇨⇩ FLEXLOGIC ⇨⇩ FLEXMATH ⇨ SUMMATOR ⇨ SUMMATOR 1(6)

■ **SUMMATOR 1** ■	⇔	**SUMMATOR 1 FUNCTION: Disabled**	Range: Disabled, Enabled
	⇕	**SUMMATOR 1 INPUT MODE: SIGNED**	Range: SIGNED, ABSOLUTE
	⇕	**SUMMATOR 1 HOLD: Off**	Range: FlexLogic operand

SUMMATOR 1 PICKUP: 1000.000	Range: –2000000.000 to 2000000.000 in steps of 0.001
SUMMATOR 1 HYSTERESIS: 3.0%	Range: 0.1 to 50.0% in steps of 0.1
SUMMATOR 1 UNITS:	Range: up to four alphanumeric characters
SUMMATOR 1 PU BASE: 1	Range: 1 to 2000000 in steps of 1
SUMMATOR 1 INPUT 1: Off	Range: Off, any FlexAnalog parameter. See Appendix A for complete list.
SUMMATOR 1 INPUT 2: Off	Range: Off, any FlexAnalog parameter. See Appendix A for complete list.
⇩	
SUMMATOR 1 INPUT 6: Off	Range: Off, any FlexAnalog parameter. See Appendix A for complete list.
SUMMATOR 1 SCALE 1: 1.000000	Range: –2000.000000 to 2000.000000 in steps of 0.000001
SUMMATOR 1 SCALE 2: 1.000000	Range: –2000.000000 to 2000.000000 in steps of 0.000001
⇩	
SUMMATOR 1 SCALE 6: 1.000000	Range: –2000.000000 to 2000.000000 in steps of 0.000001
SUMMATOR 1 POS 1: Off	Range: FlexLogic operand
SUMMATOR 1 POS 2: Off	Range: FlexLogic operand
⇩	
SUMMATOR 1 POS 6: Off	Range: FlexLogic operand
SUMMATOR 1 EVENTS: Disabled	Range: Disabled, Enabled

Six identical summators are available in each N60 device.

Each summator has six inputs and a scaling factor is provided for each input. The scaling factors can be set to +1 and –1, allowing straight addition and subtraction of the inputs. A FlexLogic operand provided for each input can dynamically include/exclude the input from calculations.

The summator performs the following operation:

$$Y = P_1S_1X_1 + P_2S_2X_2 + ... + P_6S_6X_6 \qquad \textbf{Eq. 5-8}$$

where

X represents the programmed input of summator N (determined by the **SUMMATOR N INPUT 1(6)** settings)
S represents the programmed scale of summator N (determined by the **SUMMATOR N SCALE 1(6)** settings)
P represents the programmed position of summator N (determined by the **SUMMATOR N POS 1(6)** settings)

The resulting Y value can be set as absolute or signed, allowing switching between the signed and absolute values of the summator.

A user-programmable threshold is available to compare the Y value with a constant when driving the output operand:

$$Op \equiv (Y > D) \quad \text{or} \quad Op \equiv (abs(Y) > D) \qquad \textbf{Eq. 5-9}$$

where

Op is an output FlexLogic operand (for example, SUMMATOR 1 OP)
D is the user-programmable threshold (for example, **SUMMATOR 1 PICKUP**)
Y is the operating value derived earlier (for example, **SUMMATOR 1 OUTPUT**)

The Y value becomes a FlexAnalog parameter itself. As such, it can be used by other summators, FlexElements, and user-programmable displays.

The settings for summator 1 are described as follows. The descriptions apply to all six summators.

SUMMATOR 1 FUNCTION — When set to "Enabled," this setting allows summator functionality.

SUMMATOR 1 INPUT MODE — Determines how the output data is formatted. When set to "SIGNED," the sign (positive/negative) of the input data summation remains intact. When set to "ABSOLUTE," the absolute value of the summation is used as the output value.

SUMMATOR 1 HOLD — The output value to the summator is frozen when the FlexLogic operand assigned to this setting is active (on).

SUMMATOR 1 PICKUP — When the output value of the summator is greater than the value assigned to this setting, the SUMMATOR 1 OP FlexLogic operand is activated (set to on).

SUMMATOR 1 HYSTERESIS — When the output value of the summator falls below the **SUMMATOR 1 PICKUP – SUMMATOR 1 HYSTERESIS** value, the SUMMATOR 1 OP FlexLogic operand is deactivated (set to off). For example, if the **SUMMATOR 1 PICKUP** is "1.000" and the **SUMMATOR 1 HYSTERESIS** is "3.0%", then the SUMMATOR 1 OP FlexLogic operand is set to off when the resultant output value falls below 0.970.

SUMMATOR 1 UNITS — Creates a character label for the summator output value display.

SUMMATOR 1 PU BASE — Defines the per-unit base factor when using the SUMMATOR 1 OUTPUT FlexAnalog quantity in other N60 features, such as FlexElements. This value is used to normalize the SUMMATOR 1 OUTPUT FlexAnalog quantity (that is, change it to a per-unit quantity). See the FlexElements section for details on per-unit base values.

SUMMATOR 1 INPUT 1(6) — These settings select the FlexAnalog quantity to use as a summator input.

SUMMATOR 1 SCALE 1(6) — These settings apply a scale factor to their corresponding FlexAnalog input quantity as it is evaluated.

SUMMATOR 1 POS 1(6) — These settings determine if a selected input is used during an evaluation of the summation process. When the FlexLogic operand selected by this setting is activated (set to on), the summator uses the **SUMMATOR 1 INPUT** item multiplied by it's corresponding **SUMMATOR 1 SCALE** setting and apply it to the resultant output.

SUMMATOR 1 EVENTS — This setting is used to generate events for the summator. The SUMMATOR 1 OPERATE event is created on the rising edge of the SUMMATOR 1 OP FlexLogic operand.

The summator logic shown is executed once in every power cycle.

Figure 5-131: Summator logic

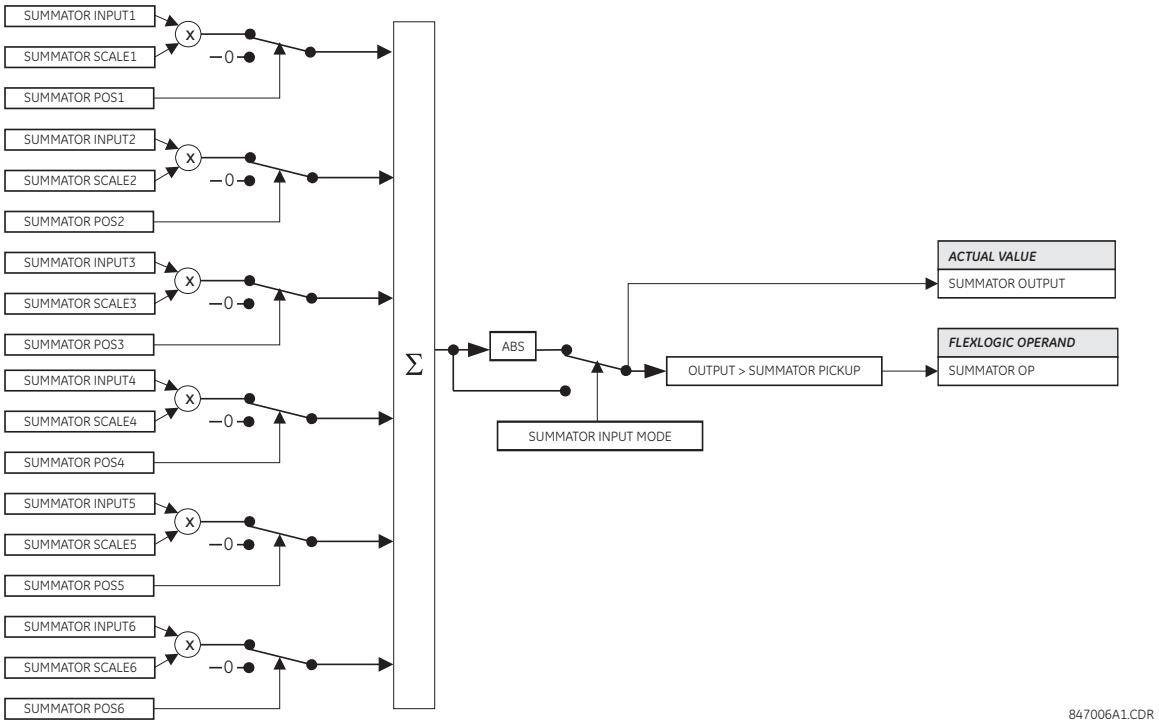

5.8 Grouped elements

5.8.1 Overview

Each protection element can be assigned up to six sets of settings with designations 1 to 6. The performance of these elements is defined by the active setting group at a given time. Multiple setting groups allow the user to conveniently change protection settings for different operating situations (for example, altered power system configuration or season of the year). The active setting group can be preset or selected in the **SETTING GROUPS** menu (see the Control Elements section later in this chapter). See also the Introduction to Elements section at the beginning of this chapter.

5.8.2 Setting group 1

SETTINGS ⇨⇩ GROUPED ELEMENTS ⇨ SETTING GROUP 1(6)

■ **SETTING GROUP 1** ■	⇔	■ **POWER SWING** ■ **DETECT**	See below
	⇩	■ **PHASE CURRENT** ■	See page 5-281
	⇩	■ **NEUTRAL CURRENT** ■	See page 5-294
	⇩	■ **GROUND CURRENT** ■	See page 5-301
	⇩	■ **VOLTAGE ELEMENTS** ■	See page 5-304
	⇩	■ **SUPERVISING** ■ **ELEMENTS**	See page 5-310

⇧	■ POWER ■	See page 5-312

Each of the six setting group menus is identical. Setting group 1 (the default active group) is active automatically when no other group is active.

If the device incorrectly switches to group 1 after power cycling, upgrade the firmware to version 7.31 or later to correct this issue.

5.8.3 Power swing detect (ANSI 68)

SETTINGS ⇨⇩ GROUPED ELEMENTS ⇨ SETTING GROUP 1(6) ⇨⇩ POWER SWING DETECT

■ POWER SWING ■ DETECT	⇔	POWER SWING FUNCTION: Disabled	Range: Disabled, Enabled
	⇩	POWER SWING SOURCE: SRC 1	Range: SRC 1, SRC 2, SRC 3, SRC 4, SRC 5, SRC 6
	⇩	POWER SWING SHAPE: Mho Shape	Range: Mho Shape, Quad Shape
	⇩	POWER SWING MODE: Two Step	Range: Two Step, Three Step
	⇩	POWER SWING SUPV: 0.600 pu	Range: 0.050 to 30.000 pu in steps of 0.001
	⇩	POWER SW I2 SUPV ENAB: Off	Range: FlexLogic operand
	⇩	POWER SWING I2 SUPV: 0.200 pu	Range: 0.050 to 30.000 pu in steps of 0.001
	⇩	POWER SWING FWD REACH: 50.00 Ω	Range: 0.10 to 500.00 ohms in steps of 0.01
	⇩	POWER SWING QUAD FWD REACH MID: 60.00 Ω	Range: 0.10 to 500.00 ohms in steps of 0.01
	⇩	POWER SWING QUAD FWD REACH OUT: 70.00 Ω	Range: 0.10 to 500.00 ohms in steps of 0.01
	⇩	POWER SWING FWD RCA: 75°	Range: 40 to 90° in steps of 1
	⇩	POWER SWING REV REACH: 50.00 Ω	Range: 0.10 to 500.00 ohms in steps of 0.01
	⇩	POWER SWING QUAD REV REACH MID: 60.00 Ω	Range: 0.10 to 500.00 ohms in steps of 0.01
	⇩	POWER SWING QUAD REV REACH OUT: 70.00 Ω	Range: 0.10 to 500.00 ohms in steps of 0.01
	⇩	POWER SWING REV RCA: 75°	Range: 40 to 90° in steps of 1
	⇩	POWER SWING OUTER LIMIT ANGLE: 120°	Range: 40 to 140° in steps of 1
	⇩	POWER SWING MIDDLE LIMIT ANGLE: 90°	Range: 40 to 140° in steps of 1
	⇩	POWER SWING INNER LIMIT ANGLE: 60°	Range: 40 to 140° in steps of 1
	⇩	POWER SWING OUTER RGT BLD: 100.00 Ω	Range: 0.10 to 500.00 ohms in steps of 0.01

⇕	**POWER SWING OUTER LFT BLD: 100.00 Ω**	Range: 0.10 to 500.00 ohms in steps of 0.01
⇕	**POWER SWING MIDDLE RGT BLD: 100.00 Ω**	Range: 0.10 to 500.00 ohms in steps of 0.01
⇕	**POWER SWING MIDDLE LFT BLD: 100.00 Ω**	Range: 0.10 to 500.00 ohms in steps of 0.01
⇕	**POWER SWING INNER RGT BLD: 100.00 Ω**	Range: 0.10 to 500.00 ohms in steps of 0.01
⇕	**POWER SWING INNER LFT BLD: 100.00 Ω**	Range: 0.10 to 500.00 ohms in steps of 0.01
⇕	**POWER SWING PICKUP DELAY 1: 0.030 s**	Range: 0.000 to 65.535 s in steps of 0.001
⇕	**POWER SWING RESET DELAY 1: 0.050 s**	Range: 0.000 to 65.535 s in steps of 0.001
⇕	**POWER SWING PICKUP DELAY 2: 0.017 s**	Range: 0.000 to 65.535 s in steps of 0.001
⇕	**POWER SWING PICKUP DELAY 3: 0.009 s**	Range: 0.000 to 65.535 s in steps of 0.001
⇕	**POWER SWING PICKUP DELAY 4: 0.017 s**	Range: 0.000 to 65.535 s in steps of 0.001
⇕	**POWER SWING SEAL-IN DELAY: 0.400 s**	Range: 0.000 to 65.535 s in steps of 0.001
⇕	**POWER SWING TRIP MODE: Delayed**	Range: Early, Delayed
⇕	**POWER SWING BLK: Off**	Range: FlexLogic operand
⇕	**POWER SWING TARGET: Self-reset**	Range: Self-reset, Latched, Disabled
⇧	**POWER SWING EVENTS: Disabled**	Range: Disabled, Enabled

The power swing detect element provides both power swing blocking and out-of-step tripping functions. The element measures the positive-sequence apparent impedance and traces its locus with respect to either two or three user-selectable operating characteristic boundaries. Upon detecting appropriate timing relations, the blocking and/or tripping indications are given through FlexLogic operands. The element incorporates an adaptive disturbance detector. This function does not trigger on power swings, but is capable of detecting faster disturbances—faults in particular—that can occur during power swings. Operation of this dedicated disturbance detector is signaled via the POWER SWING 50DD operand.

The power swing detect element asserts two operands intended for blocking selected protection elements on power swings: POWER SWING BLOCK is a traditional signal that is safely asserted for the entire duration of the power swing, and POWER SWING UN/BLOCK is established in the same way, but resets when an extra disturbance is detected during the power swing. The POWER SWING UN/BLOCK operand can be used for blocking selected protection elements if the intent is to respond to faults during power swing conditions.

Different protection elements respond differently to power swings. If tripping is required for faults during power swing conditions, some elements can be blocked permanently (using the POWER SWING BLOCK operand), and others can be blocked and dynamically unblocked upon fault detection (using the POWER SWING UN/BLOCK operand).

View the operating characteristic and logic figures along with the following discussion to understand the operation of the element.

The power swing detect element operates in three-step or two-step mode, as follows:

- **Three-step operation** — The power swing blocking sequence essentially times the passage of the locus of the positive-sequence impedance between the outer and the middle characteristic boundaries. If the locus enters the outer characteristic (indicated by the POWER SWING OUTER FlexLogic operand) but stays outside the middle characteristic (indicated by the POWER SWING MIDDLE FlexLogic operand) for an interval longer than **POWER SWING PICKUP DELAY 1**, the power swing blocking signal (POWER SWING BLOCK FlexLogic operand) is established and sealed-in. The blocking signal resets when the locus leaves the outer characteristic, but not sooner than the **POWER SWING RESET DELAY** 1 time.
- **Two-step operation** — If the two-step mode is selected, the sequence is identical to the three-step operation, but it is the outer and inner characteristics that are used to time the power swing locus.

The out-of-step tripping feature operates as follows for three-step and two-step power swing detection modes:

- **Three-step operation** — The out-of-step trip sequence identifies unstable power swings by determining if the impedance locus spends a finite time between the outer and middle characteristics and then a finite time between the middle and inner characteristics. The first step is similar to the power swing blocking sequence. After timer **POWER SWING PICKUP DELAY 1** times out, latch 1 is set as long as the impedance stays within the outer characteristic.

  If afterwards, at any time (given the impedance stays within the outer characteristic), the locus enters the middle characteristic but stays outside the inner characteristic for a period of time defined as **POWER SWING PICKUP DELAY 2**, latch 2 is set as long as the impedance stays inside the outer characteristic. If afterwards, at any time (given the impedance stays within the outer characteristic), the locus enters the inner characteristic and stays there for a period of time defined as **POWER SWING PICKUP DELAY 3**, latch 2 is set as long as the impedance stays inside the outer characteristic; the element is now ready to trip.

  If the "Early" trip mode is selected, the POWER SWING TRIP operand is set immediately and sealed-in for the interval set by the **POWER SWING SEAL-IN DELAY**. If the "Delayed" trip mode is selected, the element waits until the impedance locus leaves the inner characteristic, then times out for the **POWER SWING PICKUP DELAY 2** and sets latch 4; the element is now ready to trip. The trip operand is set later, when the impedance locus leaves the outer characteristic.
- **Two-step operation** — Similar to the three-step mode with two exceptions. First, the initial stage monitors the time spent by the impedance locus between the outer and inner characteristics. Second, the stage involving the **POWER SWING PICKUP DELAY 2** timer is bypassed. It is up to the user to integrate the blocking (POWER SWING BLOCK) and tripping (POWER SWING TRIP) FlexLogic operands with other protection functions and output contacts in order to make this element fully operational.

The element can be set to use either lens (mho) or rectangular (quadrilateral) characteristics, as shown in the figure. When set to “Mho,” the element applies the right and left blinders as well. If the blinders are not required, set their settings high enough to effectively disable the blinders.

Figure 5-132: Power swing detect mho operating characteristics

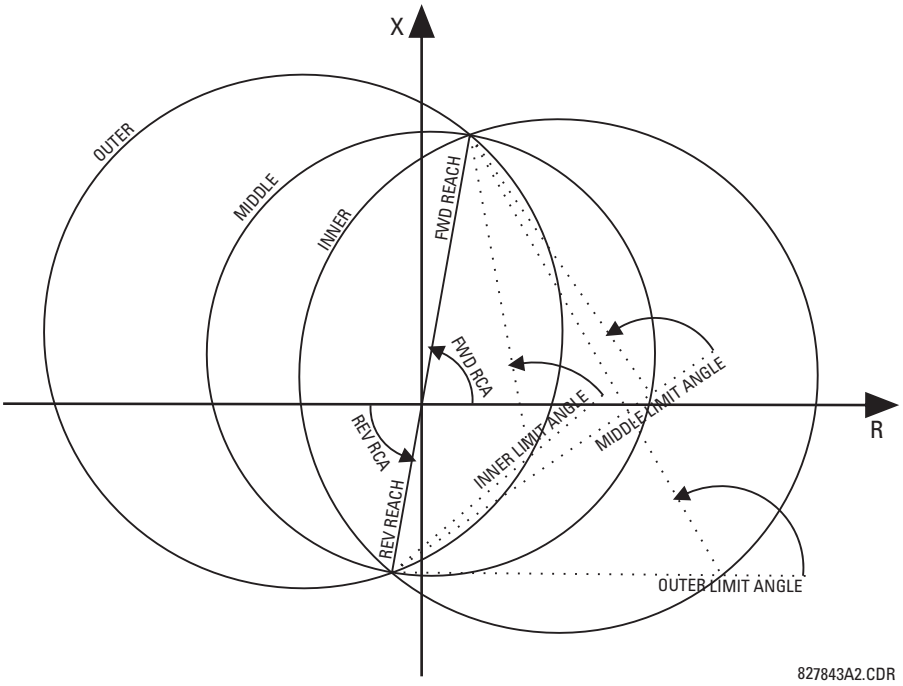

Figure 5-133: Effects of blinders on the mho characteristics

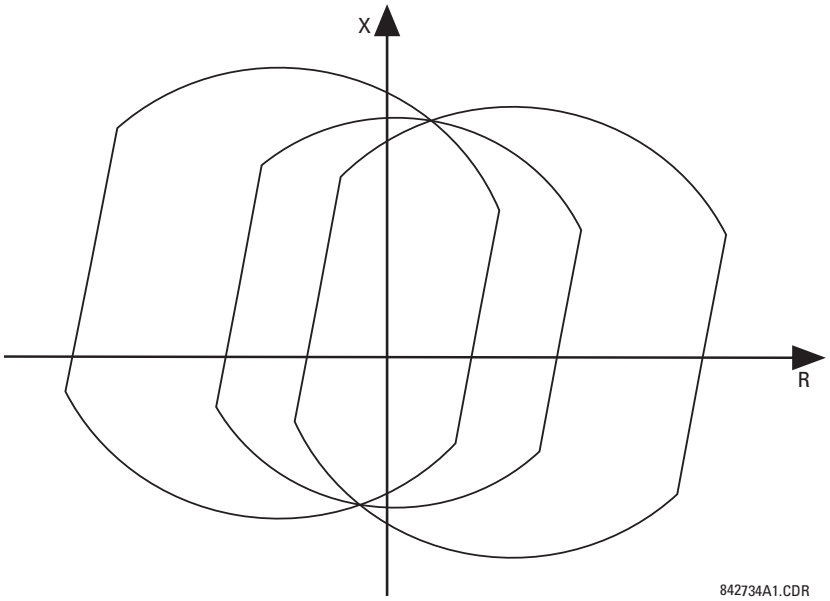

Figure 5-134: Power swing detect quadrilateral operating characteristics

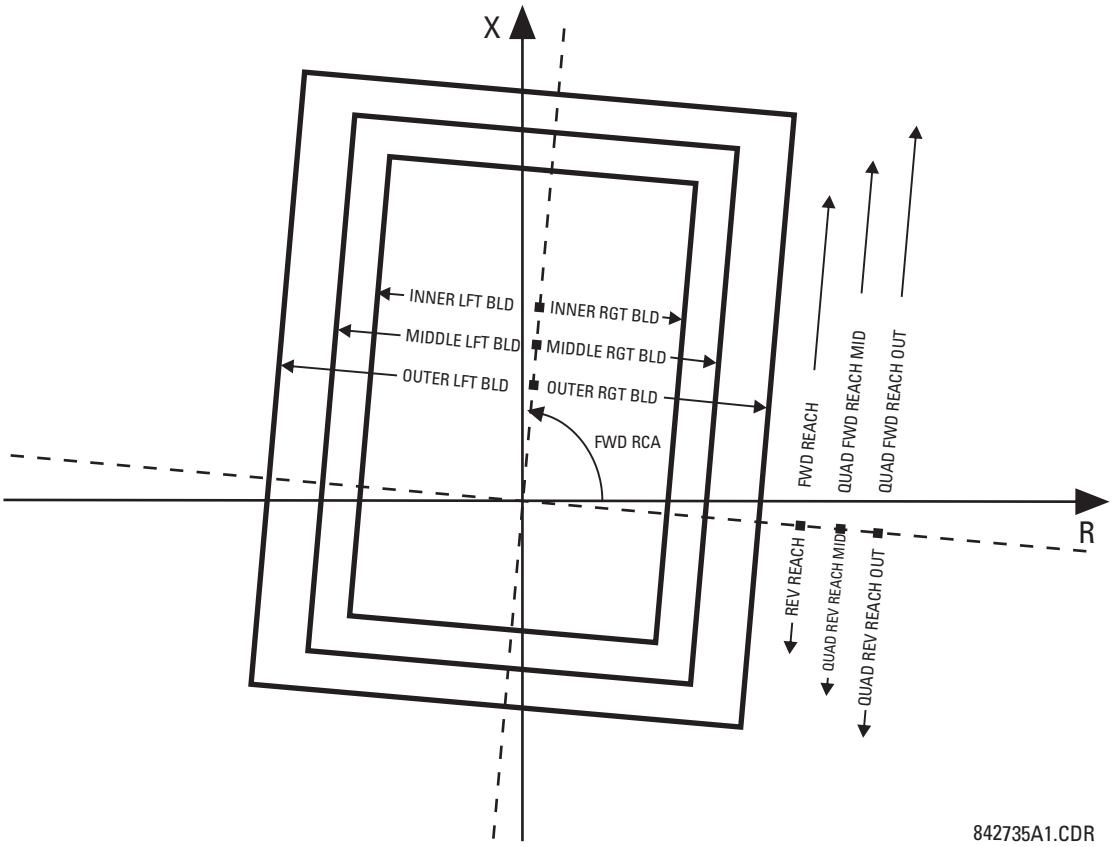

The FlexLogic output operands for the power swing detect element are as follows:

- POWER SWING OUTER, POWER SWING MIDDLE, POWER SWING INNER, POWER SWING TMR2 PKP, POWER SWING TMR3 PKP, and POWER SWING TMR4 PKP are auxiliary operands that facilitate testing and special applications
- POWER SWING BLOCK blocks selected protection elements, such as distance functions
- POWER SWING UN/BLOCK blocks those protection elements that are intended to be blocked under power swings, but subsequently unblocked when a fault occurs after the power swing blocking condition has been established
- POWER SWING 50DD indicates that an adaptive disturbance detector integrated with the element has picked up. This operand triggers on faults occurring during power swing conditions. This includes both three-phase and single-pole-open conditions.
- POWER SWING INCOMING indicates an unstable power swing with an incoming locus (the locus enters the inner characteristic)
- POWER SWING OUTGOING indicates an unstable power swing with an outgoing locus (the locus leaving the outer characteristic). This operand can be used to count unstable swings and take certain action only after a pre-defined number of unstable power swings.
- POWER SWING TRIP is a trip command

The settings for the power swing detect element are as follows.

POWER SWING FUNCTION — This setting enables and disables the power swing detection element. The setting applies to both power swing blocking and out-of-step tripping functions.

POWER SWING SOURCE — The source setting identifies the signal source for both blocking and tripping functions.

POWER SWING SHAPE — This setting selects the shapes (either "Mho" or "Quad") of the outer, middle, and inner characteristics of the power swing detect element. The operating principle is not affected. The "Mho" characteristics use the left and right blinders.

POWER SWING MODE — This setting selects between the two-step and three-step operating modes and applies it to both power swing blocking and out-of-step tripping functions. The three-step mode applies if there is enough space between the maximum load impedances and distance characteristics of the relay that all three (outer, middle, and inner) characteristics can be placed between the load and the distance characteristics. Whether the spans between the outer and middle as well as the middle and inner characteristics are sufficient is determined by analysis of the fastest power swings expected in correlation with settings of the power swing timers.

The two-step mode uses only the outer and inner characteristics for both blocking and tripping functions. This leaves more space in heavily loaded systems to place two power swing characteristics between the distance characteristics and the maximum load, but allows for only one determination of the impedance trajectory.

POWER SWING SUPV — A common overcurrent pickup level supervises all three power swing characteristics. The supervision responds to the positive-sequence current.

POWER SW I2 SUPV ENAB — This setting is to enable I2 supervision logic through a FlexLogic operand, which is used to detect the presence of significant unbalance in current signals, such as during fault conditions. Under these conditions, the POWER SWING BLOCK operand is not asserted.

POWER SWING I2 SUPV — This setting specifies the threshold of the I2 supervision logic.

POWER SWING FWD REACH — This setting specifies the forward reach of all three mho characteristics and the inner quadrilateral characteristic. For a simple system consisting of a line and two equivalent sources, this reach needs to be higher than the sum of the line and remote source positive-sequence impedances. Detailed transient stability studies can be needed for complex systems in order to determine this setting. The angle of this reach impedance is specified by the **POWER SWING FWD RCA** setting.

POWER SWING QUAD FWD REACH MID — This setting specifies the forward reach of the middle quadrilateral characteristic. The angle of this reach impedance is specified by the **POWER SWING FWD RCA** setting. The setting is not used if the shape setting is "Mho."

POWER SWING QUAD FWD REACH OUT — This setting specifies the forward reach of the outer quadrilateral characteristic. The angle of this reach impedance is specified by the **POWER SWING FWD RCA** setting. The setting is not used if the shape setting is "Mho."

POWER SWING FWD RCA — This setting specifies the angle of the forward reach impedance for the mho characteristics, angles of all blinders, and both forward and reverse reach impedances of the quadrilateral characteristics.

POWER SWING REV REACH — This setting specifies the reverse reach of all three mho characteristics and the inner quadrilateral characteristic. For a simple system of a line and two equivalent sources, this reach needs to be higher than the positive-sequence impedance of the local source. Detailed transient stability studies can be needed for complex systems to determine this setting. The angle of this reach impedance is specified by the **POWER SWING REV RCA** setting for "Mho," and the **POWER SWING FWD RCA** setting for inner "Quad."

POWER SWING QUAD REV REACH MID — This setting specifies the reverse reach of the middle quadrilateral characteristic. The angle of this reach impedance is specified by the **POWER SWING FWD RCA** setting. The setting is not used if the shape setting is "Mho."

POWER SWING QUAD REV REACH OUT — This setting specifies the reverse reach of the outer quadrilateral characteristic. The angle of this reach impedance is specified by the **POWER SWING FWD RCA** setting. The setting is not used if the shape setting is "Mho."

POWER SWING REV RCA — This setting specifies the angle of the reverse reach impedance for the mho characteristics. This setting applies to mho shapes only.

POWER SWING OUTER LIMIT ANGLE — This setting defines the outer power swing characteristic. The convention depicted in the power swing detect mho operating characteristic diagram are to be observed: values greater than 90° result in an apple-shaped characteristic; values less than 90° result in a lens-shaped characteristic. This angle must be selected in consideration of the maximum expected load. If the maximum load angle is known, coordinate the outer limit angle with a 20° security margin. Detailed studies can be needed for complex systems to determine this setting. This setting applies to mho shapes only.

POWER SWING MIDDLE LIMIT ANGLE — This setting defines the middle power swing detect characteristic. It is relevant only for the three-step mode. A typical value is close to the average of the outer and inner limit angles. This setting applies to mho shapes only.

POWER SWING INNER LIMIT ANGLE — This setting defines the inner power swing detect characteristic. The inner characteristic is used by the out-of-step tripping function: beyond the inner characteristic out-of-step trip action is definite (the actual trip can be delayed as per the **TRIP MODE** setting). Therefore, this angle must be selected in consideration to the power swing angle beyond which the system becomes unstable and cannot recover.

The inner characteristic is also used by the power swing blocking function in the two-step mode. In this case, set this angle large enough so that the characteristics of the distance elements are safely enclosed by the inner characteristic. This setting applies to mho shapes only.

POWER SWING OUTER, **MIDDLE**, and **INNER RGT BLD** — These settings specify the resistive reach of the right blinder. The blinder applies to both "Mho" and "Quad" characteristics. Set these value high if no blinder is required for the "Mho" characteristic.

POWER SWING OUTER, **MIDDLE**, and **INNER LFT BLD** — These settings specify the resistive reach of the left blinder. Enter a positive value; the relay automatically uses a negative value. The blinder applies to both "Mho" and "Quad" characteristics. Set this value high if no blinder is required for the "Mho" characteristic.

POWER SWING PICKUP DELAY 1 — All the coordinating timers are related to each other and need to be set to detect the fastest expected power swing and produce out-of-step tripping in a secure manner. Set the timers in relation to the power swing detect characteristics, mode of power swing detect operation, and mode of out-of-step tripping. This timer defines the interval that the impedance locus must spend between the outer and inner characteristics (two-step operating mode), or between the outer and middle characteristics (three-step operating mode) before the power swing blocking signal is established. This time delay must be set shorter than the time required for the impedance locus to travel between the two selected characteristics during the fastest expected power swing. This setting is relevant for both power swing blocking and out-of-step tripping.

POWER SWING RESET DELAY 1 — This setting defines the dropout delay for the power swing blocking signal. Detection of a condition requiring a block output sets latch 1 after **PICKUP DELAY 1** time. When the impedance locus leaves the outer characteristic, timer **POWER SWING RESET DELAY 1** is started. When the timer times-out, the latch is reset. Select this setting to give extra security for the power swing blocking action.

POWER SWING PICKUP DELAY 2 — Controls the out-of-step tripping function in the three-step mode only. This timer defines the interval the impedance locus must spend between the middle and inner characteristics before the second step of the out-of-step tripping sequence is completed. This time delay must be set shorter than the time required for the impedance locus to travel between the two characteristics during the fastest expected power swing.

POWER SWING PICKUP DELAY 3 — Controls the out-of-step tripping function only. It defines the interval the impedance locus must spend within the inner characteristic before the last step of the out-of-step tripping sequence is completed and the element is armed to trip. The actual moment of tripping is controlled by the **TRIP MODE** setting. This time delay is provided for extra security before the out-of-step trip action is executed.

POWER SWING PICKUP DELAY 4 — Controls the out-of-step tripping function in "Delayed" trip mode only. This timer defines the interval the impedance locus must spend outside the inner characteristic but within the outer characteristic before the element is armed for the delayed trip. The delayed trip occurs when the impedance leaves the outer characteristic. This time delay is provided for extra security. Set it considering the fastest expected power swing.

POWER SWING SEAL-IN DELAY — The out-of-step trip FlexLogic operand (POWER SWING TRIP) is sealed-in for the specified period of time. The sealing-in is crucial in the delayed trip mode, as the original trip signal is a very short pulse occurring when the impedance locus leaves the outer characteristic after the out-of-step sequence is completed.

POWER SWING TRIP MODE — Selection of the "Early" trip mode results in an instantaneous trip after the last step in the out-of-step tripping sequence is completed. The early trip mode stresses the circuit breakers as the currents at that moment are high (the electromotive forces of the two equivalent systems are approximately 180° apart). Selection of the "Delayed" trip mode results in a trip at the moment when the impedance locus leaves the outer characteristic. Delayed trip mode relaxes the operating conditions for the breakers as the currents at that moment are low. Make the selection considering the capability of the breakers in the system.

POWER SWING BLK — This setting specifies the FlexLogic operand used for blocking the Power Swing element. The blocking signal resets immediately the output POWER SWING TRIP operand.

POWER SWING EVENTS — Enables and disables the logging of power swing detect events in the sequence of events recorder.

Figure 5-135: Power swing detect logic (Sheet 1 of 3)

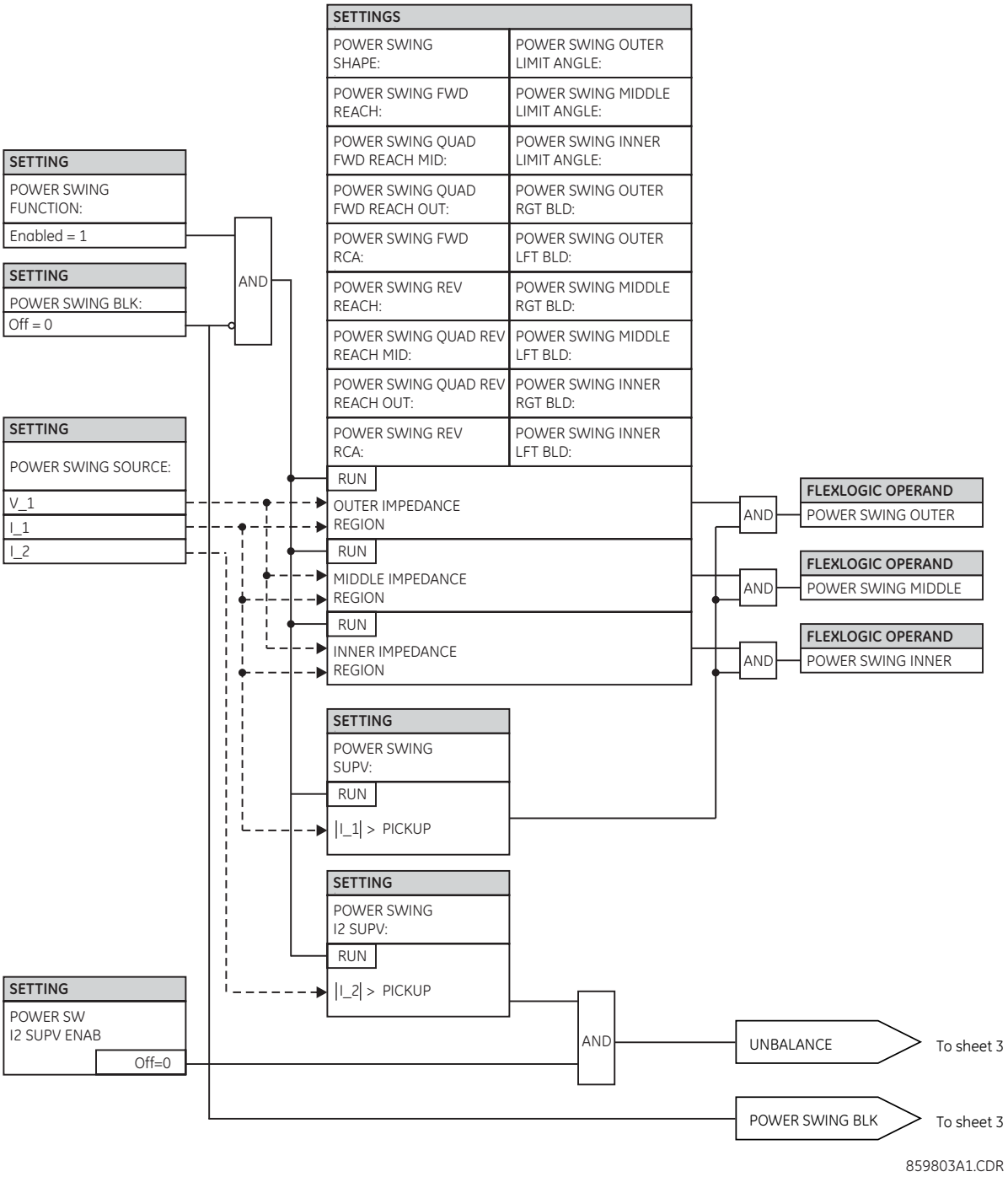

Figure 5-136: Power swing detect logic (Sheet 2 of 3)

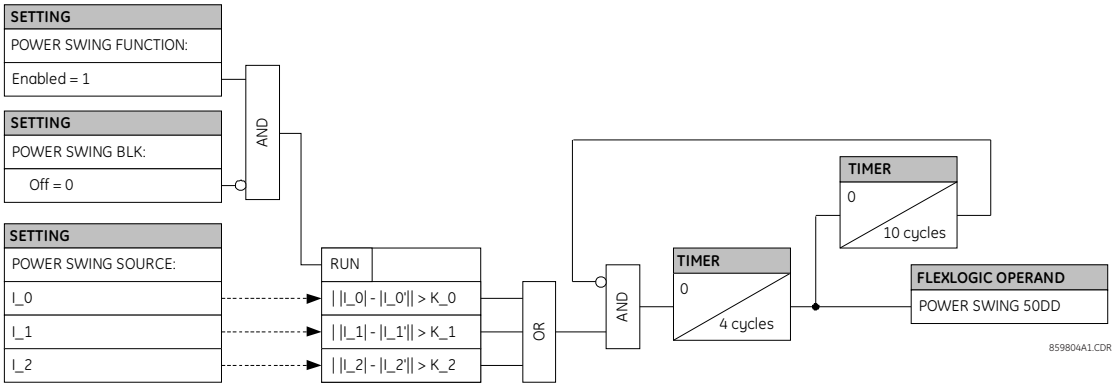

I_0, I_1, I_2 - present values
I_0', I_1', I_2' - half-a-cycle old values
K_0, K_2 - three times the average change over last power cycle
K_1 - four times the average change over last power cycle

5

Figure 5-137: Power swing detect logic (Sheet 3 of 3)

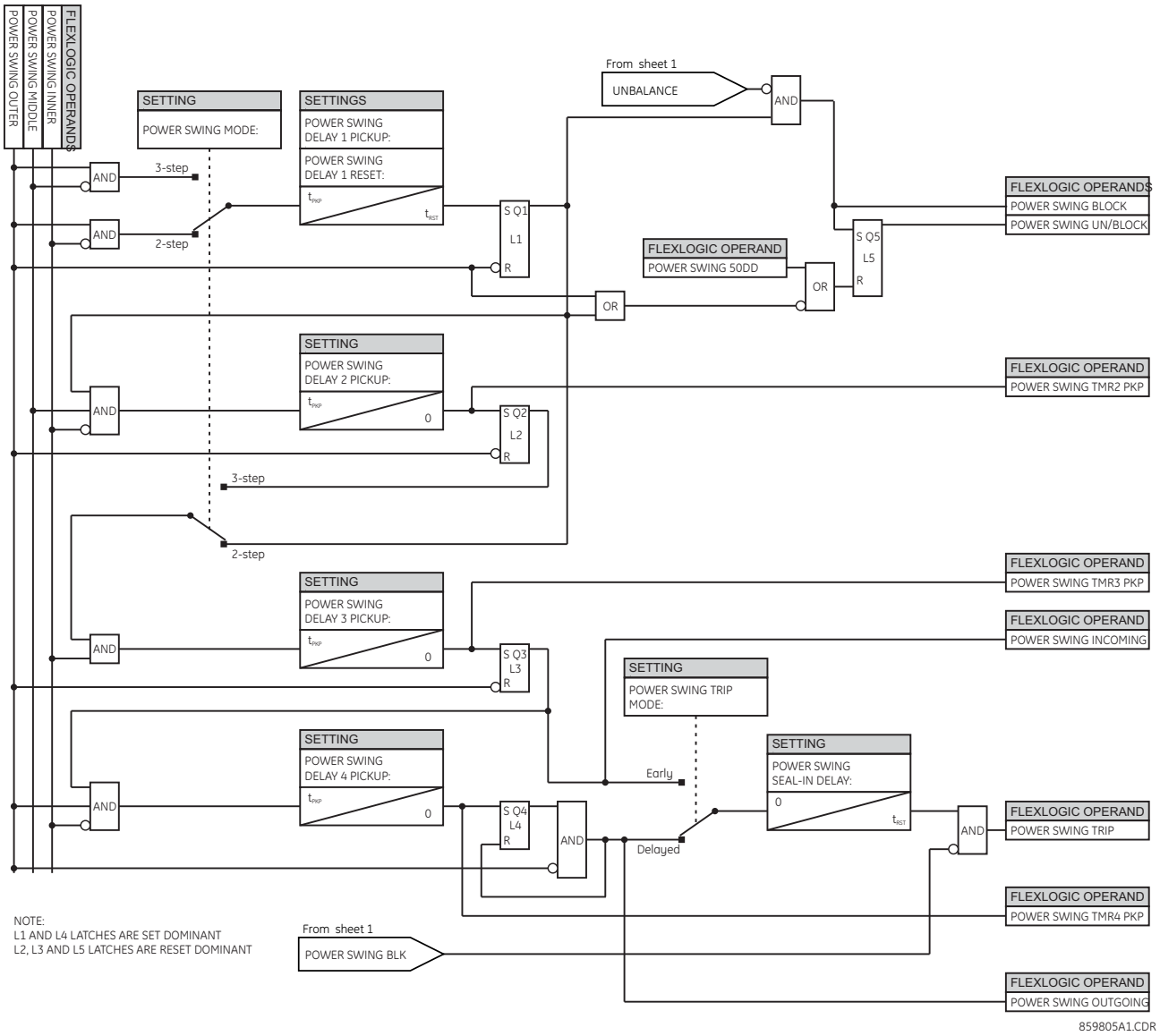

5.8.4 Phase current

5.8.4.1 Menu

SETTINGS ⇨⇩ GROUPED ELEMENTS ⇨ SETTING GROUP 1(6) ⇨⇩ PHASE CURRENT

■ PHASE CURRENT ■	⇔	■ PHASE TOC 1 ■	See page 5-287
		⇩	
	⇕	■ PHASE TOC 6 ■	
	⇕	■ PHASE IOC 1 ■	See page 5-289
		⇩	

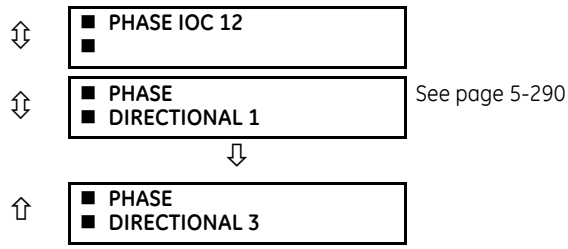

See page 5-290

The phase current elements can be used for tripping, alarming, or other functions. The actual number of elements depends on the number of current banks.

5.8.4.2 Inverse TOC curve characteristics

The inverse time overcurrent curves used by the time overcurrent elements are the IEEE, IEC, GE Type IAC, and I^2t standard curve shapes. This allows for simplified coordination with downstream devices.

If none of these curve shapes is adequate, FlexCurves can be used to customize the inverse time curve characteristics. The definite time curve is also an option that can be appropriate if only simple protection is required.

Table 5-31: Overcurrent curve types

IEEE	IEC	GE type IAC	Other
IEEE Extremely Inverse	IEC Curve A (BS142)	IAC Extremely Inverse	I^2t
IEEE Very Inverse	IEC Curve B (BS142)	IAC Very Inverse	FlexCurves A, B, C, and D
IEEE Moderately Inverse	IEC Curve C (BS142)	IAC Inverse	Recloser Curves
	IEC Short Inverse	IAC Short Inverse	Definite Time

5

A time dial multiplier setting allows selection of a multiple of the base curve shape (where the time dial multiplier = 1) with the curve shape (**CURVE**) setting. Unlike the electromechanical time dial equivalent, operate times are directly proportional to the time multiplier (**TD MULTIPLIER**) setting value. For example, all times for a multiplier of 10 are 10 times the multiplier 1 or base curve values. Setting the multiplier to zero results in an instantaneous response to all current levels above pickup.

Time overcurrent time calculations are made with an internal *energy capacity* memory variable. When this variable indicates that the energy capacity has reached 100%, a time overcurrent element operates. If less than 100% energy capacity is accumulated in this variable and the current falls below the dropout threshold of 97 to 98% of the pickup value, the variable must be reduced. Two methods of this resetting operation are available: “Instantaneous” and “Timed.” The “Instantaneous” selection is intended for applications with other relays, such as most static relays, which set the energy capacity directly to zero when the current falls below the reset threshold. The “Timed” selection can be used where the relay must coordinate with electromechanical relays.

The URs calculate operate time corresponding to the values in the range of 1.03 to 20 multiples of the pickup current. Above 20 multiples of the pickup current, URs clamp the operate time to the value at a multiple of 20, resulting in the flat part of the characteristics. Reset time is calculated in the range of 0 to 0.97 multiples of the pickup current.

IEEE curves

The IEEE time overcurrent curve shapes conform to industry standards and the IEEE C37.112-1996 curve classifications for extremely, very, and moderately inverse curves. The IEEE curves are derived from the operate and reset time equations.

$$T = TDM \times \left[\frac{A}{\left(\frac{I}{I_{pickup}}\right)^p - 1} + B \right], \quad T_{RESET} = TDM \times \left[\frac{t_r}{1 - \left(\frac{I}{I_{pickup}}\right)^2} \right] \qquad \textbf{Eq. 5-10}$$

where

T = operate time (in seconds)
TDM = Multiplier setting
I = input current
I_{pickup} = Pickup Current setting

A, B, p = constants defined in the table
T_{RESET} = reset time in seconds (assuming energy capacity is 100% and RESET is "Timed")
t_r = characteristic constant defined in the table

Table 5-32: IEEE inverse time curve constants

IEEE curve shape	A	B	p	t_r
IEEE Extremely Inverse	28.2	0.1217	2.0000	29.1
IEEE Very Inverse	19.61	0.491	2.0000	21.6
IEEE Moderately Inverse	0.0515	0.1140	0.02000	4.85

Table 5-33: IEEE curve trip times (in seconds)

Multiplier (TDM)	Current (I / I_{pickup})									
	1.5	2.0	3.0	4.0	5.0	6.0	7.0	8.0	9.0	10.0
IEEE Extremely Inverse										
0.5	11.341	4.761	1.823	1.001	0.648	0.464	0.355	0.285	0.237	0.203
1.0	22.682	9.522	3.647	2.002	1.297	0.927	0.709	0.569	0.474	0.407
2.0	45.363	19.043	7.293	4.003	2.593	1.855	1.418	1.139	0.948	0.813
4.0	90.727	38.087	14.587	8.007	5.187	3.710	2.837	2.277	1.897	1.626
6.0	136.090	57.130	21.880	12.010	7.780	5.564	4.255	3.416	2.845	2.439
8.0	181.454	76.174	29.174	16.014	10.374	7.419	5.674	4.555	3.794	3.252
10.0	226.817	95.217	36.467	20.017	12.967	9.274	7.092	5.693	4.742	4.065
IEEE Very Inverse										
0.5	8.090	3.514	1.471	0.899	0.654	0.526	0.450	0.401	0.368	0.345
1.0	16.179	7.028	2.942	1.798	1.308	1.051	0.900	0.802	0.736	0.689
2.0	32.358	14.055	5.885	3.597	2.616	2.103	1.799	1.605	1.472	1.378
4.0	64.716	28.111	11.769	7.193	5.232	4.205	3.598	3.209	2.945	2.756
6.0	97.074	42.166	17.654	10.790	7.849	6.308	5.397	4.814	4.417	4.134
8.0	129.432	56.221	23.538	14.387	10.465	8.410	7.196	6.418	5.889	5.513
10.0	161.790	70.277	29.423	17.983	13.081	10.513	8.995	8.023	7.361	6.891
IEEE Moderately Inverse										
0.5	3.220	1.902	1.216	0.973	0.844	0.763	0.706	0.663	0.630	0.603
1.0	6.439	3.803	2.432	1.946	1.688	1.526	1.412	1.327	1.260	1.207
2.0	12.878	7.606	4.864	3.892	3.377	3.051	2.823	2.653	2.521	2.414
4.0	25.756	15.213	9.729	7.783	6.753	6.102	5.647	5.307	5.041	4.827
6.0	38.634	22.819	14.593	11.675	10.130	9.153	8.470	7.960	7.562	7.241
8.0	51.512	30.426	19.458	15.567	13.507	12.204	11.294	10.614	10.083	9.654
10.0	64.390	38.032	24.322	19.458	16.883	15.255	14.117	13.267	12.604	12.068

IEC curves

For European applications, the relay offers three standard curves defined in IEC 255-4 and British standard BS142. These are defined as IEC Curve A, IEC Curve B, and IEC Curve C. The IEC curves are derived by the operate and reset time equations.

$$T = TDM \times \left[\frac{K}{(I/I_{pickup})^E - 1}\right], \quad T_{RESET} = TDM \times \left[\frac{t_r}{1-(I/I_{pickup})^2}\right] \qquad \textbf{Eq. 5-11}$$

where

T = operate time (in seconds)
TDM = Multiplier setting
I = input current
I_{pickup} = Pickup Current setting
K, E = constants defined in the table
t_r = characteristic constant defined in the table
T_{RESET} = reset time in seconds (assuming energy capacity is 100% and **RESET** is "Timed")

Table 5-34: IEC (BS) inverse time curve constants

IEC (BS) curve shape	K	E	t_r
IEC Curve A (BS142)	0.140	0.020	9.7
IEC Curve B (BS142)	13.500	1.000	43.2
IEC Curve C (BS142)	80.000	2.000	58.2
IEC Short Inverse	0.050	0.040	0.500

Table 5-35: IEC curve trip times (in seconds)

Multiplier (TDM)	Current (I / I_{pickup})									
	1.5	**2.0**	**3.0**	**4.0**	**5.0**	**6.0**	**7.0**	**8.0**	**9.0**	**10.0**
IEC Curve A										
0.05	0.860	0.501	0.315	0.249	0.214	0.192	0.176	0.165	0.156	0.149
0.10	1.719	1.003	0.630	0.498	0.428	0.384	0.353	0.330	0.312	0.297
0.20	3.439	2.006	1.260	0.996	0.856	0.767	0.706	0.659	0.623	0.594
0.40	6.878	4.012	2.521	1.992	1.712	1.535	1.411	1.319	1.247	1.188
0.60	10.317	6.017	3.781	2.988	2.568	2.302	2.117	1.978	1.870	1.782
0.80	13.755	8.023	5.042	3.984	3.424	3.070	2.822	2.637	2.493	2.376
1.00	17.194	10.029	6.302	4.980	4.280	3.837	3.528	3.297	3.116	2.971
IEC Curve B										
0.05	1.350	0.675	0.338	0.225	0.169	0.135	0.113	0.096	0.084	0.075
0.10	2.700	1.350	0.675	0.450	0.338	0.270	0.225	0.193	0.169	0.150
0.20	5.400	2.700	1.350	0.900	0.675	0.540	0.450	0.386	0.338	0.300
0.40	10.800	5.400	2.700	1.800	1.350	1.080	0.900	0.771	0.675	0.600
0.60	16.200	8.100	4.050	2.700	2.025	1.620	1.350	1.157	1.013	0.900
0.80	21.600	10.800	5.400	3.600	2.700	2.160	1.800	1.543	1.350	1.200
1.00	27.000	13.500	6.750	4.500	3.375	2.700	2.250	1.929	1.688	1.500
IEC Curve C										
0.05	3.200	1.333	0.500	0.267	0.167	0.114	0.083	0.063	0.050	0.040
0.10	6.400	2.667	1.000	0.533	0.333	0.229	0.167	0.127	0.100	0.081
0.20	12.800	5.333	2.000	1.067	0.667	0.457	0.333	0.254	0.200	0.162
0.40	25.600	10.667	4.000	2.133	1.333	0.914	0.667	0.508	0.400	0.323
0.60	38.400	16.000	6.000	3.200	2.000	1.371	1.000	0.762	0.600	0.485
0.80	51.200	21.333	8.000	4.267	2.667	1.829	1.333	1.016	0.800	0.646
1.00	64.000	26.667	10.000	5.333	3.333	2.286	1.667	1.270	1.000	0.808
IEC Short Inverse										
0.05	0.153	0.089	0.056	0.044	0.038	0.034	0.031	0.029	0.027	0.026
0.10	0.306	0.178	0.111	0.088	0.075	0.067	0.062	0.058	0.054	0.052
0.20	0.612	0.356	0.223	0.175	0.150	0.135	0.124	0.115	0.109	0.104
0.40	1.223	0.711	0.445	0.351	0.301	0.269	0.247	0.231	0.218	0.207
0.60	1.835	1.067	0.668	0.526	0.451	0.404	0.371	0.346	0.327	0.311
0.80	2.446	1.423	0.890	0.702	0.602	0.538	0.494	0.461	0.435	0.415

Multiplier (TDM)	Current (I / I_{pickup})									
	1.5	2.0	3.0	4.0	5.0	6.0	7.0	8.0	9.0	10.0
1.00	3.058	1.778	1.113	0.877	0.752	0.673	0.618	0.576	0.544	0.518

IAC curves

The curves for the General Electric type IAC relay family are derived from the formulae:

$$T = TDM \times \left(A + \frac{B}{(I/I_{pkp}) - C} + \frac{D}{((I/I_{pkp}) - C)^2} + \frac{E}{((I/I_{pkp}) - C)^3} \right) \quad , \quad T_{RESET} = TDM \times \left[\frac{t_r}{1 - (I/I_{pkp})^2} \right] \qquad \textbf{Eq. 5-12}$$

where

T = operate time (in seconds)
TDM = Multiplier setting
I = Input current
I_{pkp} = Pickup Current setting
A to E = constants defined in the table
t_r = characteristic constant defined in the table
T_{RESET} = reset time in seconds (assuming energy capacity is 100% and RESET is "Timed")

Table 5-36: GE type IAC inverse time curve constants

IAC curve shape	A	B	C	D	E	t_r
IAC Extreme Inverse	0.0040	0.6379	0.6200	1.7872	0.2461	6.008
IAC Very Inverse	0.0900	0.7955	0.1000	–1.2885	7.9586	4.678
IAC Inverse	0.2078	0.8630	0.8000	–0.4180	0.1947	0.990
IAC Short Inverse	0.0428	0.0609	0.6200	–0.0010	0.0221	0.222

Table 5-37: GE type IAC curve trip times

Multiplier (TDM)	Current (I / I_{pickup})									
	1.5	2.0	3.0	4.0	5.0	6.0	7.0	8.0	9.0	10.0
IAC Extremely Inverse										
0.5	1.699	0.749	0.303	0.178	0.123	0.093	0.074	0.062	0.053	0.046
1.0	3.398	1.498	0.606	0.356	0.246	0.186	0.149	0.124	0.106	0.093
2.0	6.796	2.997	1.212	0.711	0.491	0.372	0.298	0.248	0.212	0.185
4.0	13.591	5.993	2.423	1.422	0.983	0.744	0.595	0.495	0.424	0.370
6.0	20.387	8.990	3.635	2.133	1.474	1.115	0.893	0.743	0.636	0.556
8.0	27.183	11.987	4.846	2.844	1.966	1.487	1.191	0.991	0.848	0.741
10.0	33.979	14.983	6.058	3.555	2.457	1.859	1.488	1.239	1.060	0.926
IAC Very Inverse										
0.5	1.451	0.656	0.269	0.172	0.133	0.113	0.101	0.093	0.087	0.083
1.0	2.901	1.312	0.537	0.343	0.266	0.227	0.202	0.186	0.174	0.165
2.0	5.802	2.624	1.075	0.687	0.533	0.453	0.405	0.372	0.349	0.331
4.0	11.605	5.248	2.150	1.374	1.065	0.906	0.810	0.745	0.698	0.662
6.0	17.407	7.872	3.225	2.061	1.598	1.359	1.215	1.117	1.046	0.992
8.0	23.209	10.497	4.299	2.747	2.131	1.813	1.620	1.490	1.395	1.323
10.0	29.012	13.121	5.374	3.434	2.663	2.266	2.025	1.862	1.744	1.654
IAC Inverse										
0.5	0.578	0.375	0.266	0.221	0.196	0.180	0.168	0.160	0.154	0.148
1.0	1.155	0.749	0.532	0.443	0.392	0.360	0.337	0.320	0.307	0.297

Multiplier (TDM)	Current (I / I_{pickup})									
	1.5	**2.0**	**3.0**	**4.0**	**5.0**	**6.0**	**7.0**	**8.0**	**9.0**	**10.0**
2.0	2.310	1.499	1.064	0.885	0.784	0.719	0.674	0.640	0.614	0.594
4.0	4.621	2.997	2.128	1.770	1.569	1.439	1.348	1.280	1.229	1.188
6.0	6.931	4.496	3.192	2.656	2.353	2.158	2.022	1.921	1.843	1.781
8.0	9.242	5.995	4.256	3.541	3.138	2.878	2.695	2.561	2.457	2.375
10.0	11.552	7.494	5.320	4.426	3.922	3.597	3.369	3.201	3.072	2.969
IAC Short Inverse										
0.5	0.072	0.047	0.035	0.031	0.028	0.027	0.026	0.026	0.025	0.025
1.0	0.143	0.095	0.070	0.061	0.057	0.054	0.052	0.051	0.050	0.049
2.0	0.286	0.190	0.140	0.123	0.114	0.108	0.105	0.102	0.100	0.099
4.0	0.573	0.379	0.279	0.245	0.228	0.217	0.210	0.204	0.200	0.197
6.0	0.859	0.569	0.419	0.368	0.341	0.325	0.314	0.307	0.301	0.296
8.0	1.145	0.759	0.559	0.490	0.455	0.434	0.419	0.409	0.401	0.394
10.0	1.431	0.948	0.699	0.613	0.569	0.542	0.524	0.511	0.501	0.493

I^2t curves

The I^2t curves are derived as follows:

$$T = TDM \times \left[\frac{100}{\left(\frac{I}{I_{pickup}} \right)^2} \right], \quad T_{RESET} = TDM \times \left[\frac{100}{\left(\frac{I}{I_{pickup}} \right)^{-2}} \right] \qquad \textbf{Eq. 5-13}$$

where

T = Operate time (in seconds)
TDM = Multiplier setting
I = Input current
I_{pickup} = Pickup Current setting
T_{RESET} = reset time in seconds (assuming energy capacity is 100% and RESET is "Timed")

Table 5-38: I^2t curve trip times

Multiplier (TDM)	Current (I / I_{pickup})									
	1.5	**2.0**	**3.0**	**4.0**	**5.0**	**6.0**	**7.0**	**8.0**	**9.0**	**10.0**
0.01	0.44	0.25	0.11	0.06	0.04	0.03	0.02	0.02	0.01	0.01
0.10	4.44	2.50	1.11	0.63	0.40	0.28	0.20	0.16	0.12	0.10
1.00	44.44	25.00	11.11	6.25	4.00	2.78	2.04	1.56	1.23	1.00
10.00	444.44	250.00	111.11	62.50	40.00	27.78	20.41	15.63	12.35	10.00
100.00	4444.4	2500.0	1111.1	625.00	400.00	277.78	204.08	156.25	123.46	100.00
600.00	26666.7	15000.0	6666.7	3750.0	2400.0	1666.7	1224.5	937.50	740.74	600.00

FlexCurves

FlexCurves are described in the FlexCurves section later in this chapter. The curve shapes for the FlexCurves are derived from the formulae:

$$T = TDM \times \left[\text{FlexCurve Time at } \left(\frac{I}{I_{pickup}}\right)\right] \text{ when } \left(\frac{I}{I_{pickup}}\right) \geq 1.00 \qquad \textbf{Eq. 5-14}$$

$$T_{RESET} = TDM \times \left[\text{FlexCurve Time at } \left(\frac{I}{I_{pickup}}\right)\right] \text{ when } \left(\frac{I}{I_{pickup}}\right) \leq 0.98 \qquad \textbf{Eq. 5-15}$$

where

T = operate time (in seconds)
TDM = Multiplier setting
I = Input Current
I_{pickup} = Pickup Current setting
T_{RESET} = Reset Time in seconds (assuming energy capacity is 100% and **RESET**: Timed)

Definite time curve

The Definite Time curve shape operates as soon as the pickup level is exceeded for a specified period of time. The base definite time curve delay is in seconds. The curve multiplier of 0.00 to 600.00 makes this delay adjustable from instantaneous to 600.00 seconds in steps of 10 ms. The definite time curve shapes are defined as follows:

$$T = TDM \text{ in seconds, when } I > I_{pickup} \qquad \textbf{Eq. 5-16}$$

$$T_{RESET} = TDM \text{ in seconds} \qquad \textbf{Eq. 5-17}$$

where

T = Operate Time (in seconds)
TDM = Multiplier setting
I = Input Current
I_{pickup} = Pickup Current setting
T_{RESET} = Reset Time in seconds (assuming energy capacity is 100% and RESET: Timed)

Recloser curves

The N60 uses the FlexCurve feature to facilitate programming of 41 recloser curves. See the FlexCurves settings section earlier in this chapter for details.

5.8.4.3 Phase time overcurrent (ANSI 51P, IEC PTOC)

SETTINGS ⇨⇩ GROUPED ELEMENTS ⇨⇩ SETTING GROUP 1(6) ⇨ PHASE CURRENT ⇨ PHASE TOC1(6)

■ **PHASE TOC 1** ■	⇔	**PHASE TOC1 FUNCTION: Disabled**	Range: Disabled, Enabled
	⇩	**PHASE TOC1 SIGNAL SOURCE: SRC 1**	Range: SRC 1, SRC 2, SRC 3, SRC 4, SRC 5, SRC 6
	⇩	**PHASE TOC1 INPUT: Phasor**	Range: Phasor, RMS
	⇩	**PHASE TOC1 PICKUP: 1.000 pu**	Range: 0.020 to 30.000 pu in steps of 0.001
	⇩	**PHASE TOC1 CURVE: IEEE Mod Inv**	Range: see Overcurrent Curve Types table

⇕	**PHASE TOC1 TD MULTIPLIER: 1.00**	Range: 0.00 to 600.00 in steps of 0.01
⇕	**PHASE TOC1 RESET: Instantaneous**	Range: Instantaneous, Timed
⇕	**PHASE TOC1 VOLTAGE RESTRAINT: Disabled**	Range: Disabled, Enabled
⇕	**PHASE TOC1 BLOCK A: Off**	Range: FlexLogic operand
⇕	**PHASE TOC1 BLOCK B: Off**	Range: FlexLogic operand
⇕	**PHASE TOC1 BLOCK C: Off**	Range: FlexLogic operand
⇕	**PHASE TOC1 TARGET: Self-reset**	Range: Self-reset, Latched, Disabled
⇧	**PHASE TOC1 EVENTS: Disabled**	Range: Disabled, Enabled

The phase time overcurrent element can provide a specified time-delay operating characteristic versus the applied current or be used as a simple definite time element. The phase current input quantities can be programmed as fundamental phasor magnitude or total waveform RMS magnitude as required by the application.

Two methods of resetting operation are available: "Timed" and "Instantaneous" (see the Inverse TOC Curve Characteristics section earlier for details on curve setup, trip times, and reset operation). When the element is blocked, the time accumulator resets according to the reset characteristic. For example, if the element reset characteristic is set to "Instantaneous" and the element is blocked, the time accumulator clears immediately.

The **PHASE TOC1 PICKUP** setting can be reduced dynamically by a voltage restraint feature (when enabled). This is accomplished via the multipliers (Mvr) corresponding to the phase-phase voltages of the voltage restraint characteristic curve (see the figure); the pickup level is calculated as Mvr times the **PHASE TOC1 PICKUP** setting. If the voltage restraint feature is disabled, the pickup level always remains at the setting value.

Figure 5-138: Phase time overcurrent voltage restraint characteristic

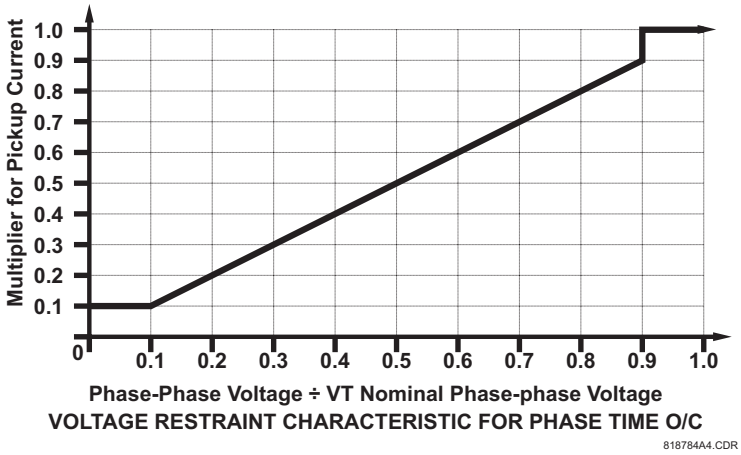

FUNCTION — This setting enables and disables the phase time overcurrent protection element.

SIGNAL SOURCE — Selects the signal source for the phase time overcurrent protection element.

INPUT — Selects how phase current input quantities are interpreted by the N60. Inputs can be selected as fundamental phasor magnitudes or total waveform RMS magnitudes as required by the application.

PICKUP — Specifies the phase time overcurrent pickup level in per-unit values.

CURVE — Selects the time inverse overcurrent curve style.

TD MULTIPLIER — When **TOC1 CURVE** setting is set to Definite Time, this setting defines time delay to element pickup. When **TOC1 CURVE** setting is set to any inverse time curve, this setting defines inverse curve multiplier, used in the chosen curve equation.

RESET — The "Instantaneous" reset method is intended for applications with other relays, such as most static relays, which set the energy capacity directly to zero when the current falls below the reset threshold. The "Timed" reset method can be used where the relay must coordinate with electromechanical relays.

VOLTAGE RESTRAINT — Enables and disables the phase time overcurrent voltage restraint feature.

BLOCK A — Assertion of the operand assigned to this setting blocks phase A of the phase time overcurrent element.

EVENTS — Enables and disables the logging of phase time overcurrent events in the sequence of events recorder.

Figure 5-139: Phase time overcurrent 1 logic

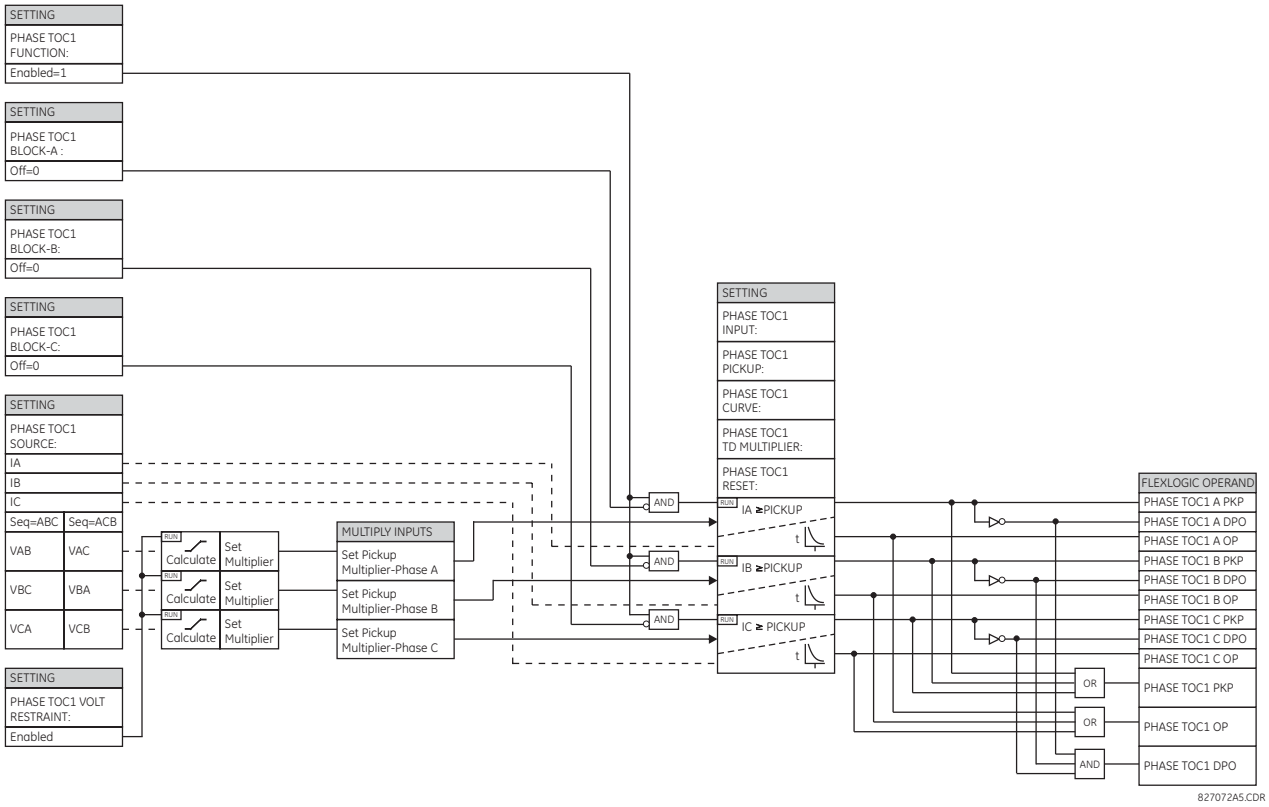

5.8.4.4 Phase instantaneous overcurrent (ANSI 50P, IEC PIOC)

SETTINGS ⇨⇩ GROUPED ELEMENTS ⇨ SETTING GROUP 1(6) ⇨ PHASE CURRENT ⇨ PHASE IOC 1(12)

■ **PHASE IOC 1** ■	⇔	**PHASE IOC1 FUNCTION: Disabled**	Range: Disabled, Enabled
	⇕	**PHASE IOC1 SIGNAL SOURCE: SRC 1**	Range: SRC 1, SRC 2, SRC 3, SRC 4, SRC 5, SRC 6
	⇕	**PHASE IOC1 PICKUP: 1.000 pu**	Range: 0.005 to 30.000 pu in steps of 0.001
	⇕	**PHASE IOC1 PICKUP DELAY: 0.00 s**	Range: 0.00 to 600.00 s in steps of 0.01

⇕	**PHASE IOC1 RESET DELAY: 0.00 s**	Range: 0.00 to 600.00 s in steps of 0.01
⇕	**PHASE IOC1 BLOCK A: Off**	Range: FlexLogic operand
	⇩	
⇕	**PHASE IOC1 BLOCK C: Off**	Range: FlexLogic operand
⇕	**PHASE IOC1 TARGET: Self-reset**	Range: Self-reset, Latched, Disabled
⇧	**PHASE IOC1 EVENTS: Disabled**	Range: Disabled, Enabled

The phase instantaneous overcurrent element can be used as an instantaneous element with no intentional delay or as a definite time element. The input current is the fundamental phasor magnitude.

FUNCTION — This setting enables and disables the phase instantaneous overcurrent protection element.

SOURCE — Selects the signal source for the phase instantaneous overcurrent protection element.

PICKUP — Specifies the phase instantaneous overcurrent pickup level in per-unit values.

DELAY —Delays the assertion of the PHASE IOC OP operands. It is used to achieve timing coordination with other elements and relays.

RESET DELAY — Specifies a delay for the reset of the phase instantaneous overcurrent element between the operate output state and the return to logic 0 after the input passes outside the defined pickup range. This setting is used to ensure that the relay output contacts are closed long enough to ensure reception by downstream equipment.

BLOCK A — Assertion of the operand assigned to this setting block's phase A of the phase instantaneous overcurrent element.

EVENTS — Enables and disables the logging of phase instantaneous overcurrent events in the sequence of events recorder.

Figure 5-140: Phase instantaneous overcurrent 1 logic

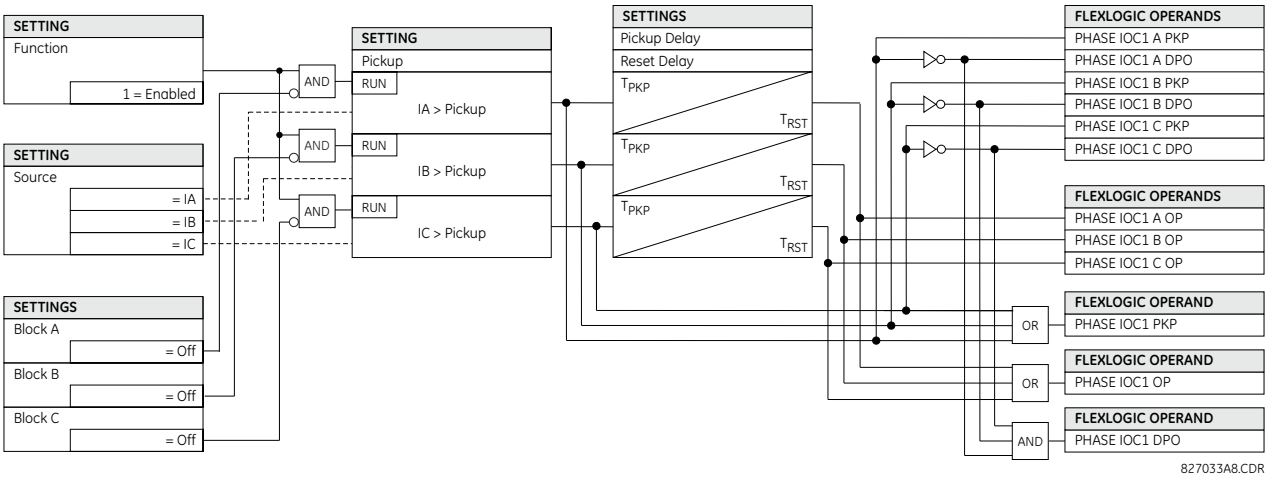

5.8.4.5 Phase directional overcurrent (ANSI 67P, IEC PVCB/PTOC)

SETTINGS ⇨⇩ GROUPED ELEMENTS ⇨ SETTING GROUP 1(6) ⇨ PHASE CURRENT ⇨ PHASE DIRECTIONAL 1(3)

■ **PHASE** ■ **DIRECTIONAL 1**	⇔	**PHASE DIR 1 FUNCTION: Disabled**	Range: Disabled, Enabled
	⇕	**PHASE DIR 1 SIGNAL SOURCE: SRC 1**	Range: SRC 1, SRC 2, SRC 3, SRC 4, SRC 5, SRC 6

⇕	**PHASE DIR 1 BLOCK: Off**	Range: FlexLogic operand
⇕	**PHASE DIR 1 ECA: 30°**	Range: 0 to 359° in steps of 1
⇕	**PHASE DIR POL V1 THRESHOLD: 0.700 pu**	Range: 0.004 to 3.000 pu in steps of 0.001
⇕	**PHASE DIR 1 BLOCK WHEN V MEM EXP: No**	Range: No, Yes
⇕	**PHASE DIR 1 TARGET: Self-reset**	Range: Self-reset, Latched, Disabled
⇧	**PHASE DIR 1 EVENTS: Disabled**	Range: Disabled, Enabled

NOTE

The TARGET setting is not user-selectable and forced to "Disabled". If Targets are required from directional elements, it can be achieved by assigning directional element output to a digital element, where targets selection can be used as required.

The phase directional elements (one for each of phases A, B, and C) determine the phase current flow direction for steady state and fault conditions and can be used to control the operation of the phase overcurrent elements via the **BLOCK** inputs of these elements.

Figure 5-141: Phase A directional polarization

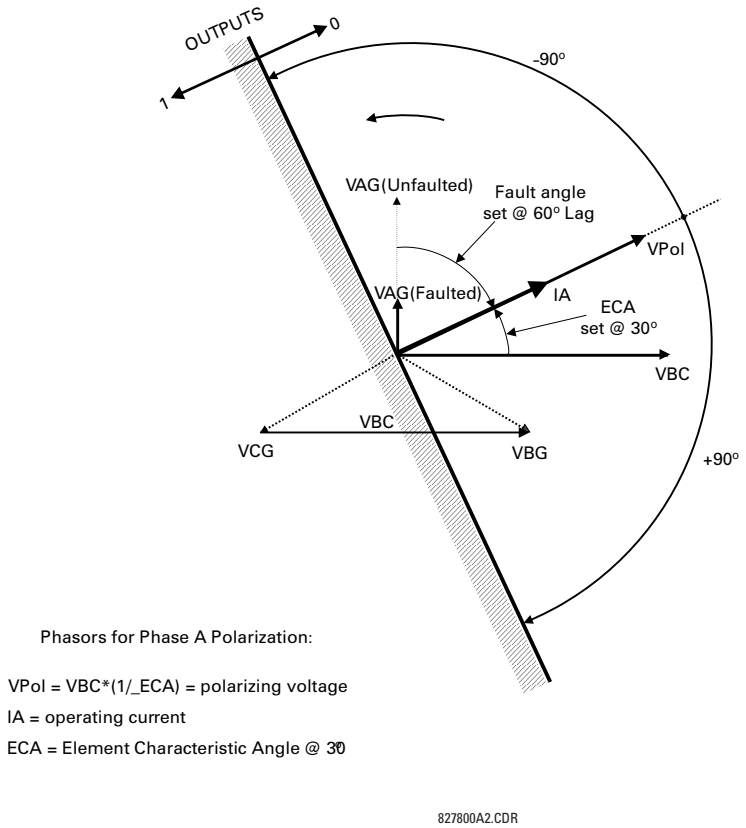

This element is intended to apply a block signal to an overcurrent element to prevent an operation when current is flowing in a particular direction. The direction of current flow is determined by measuring the phase angle between the current from the phase CTs and the line-line voltage from the VTs, based on the 90° or quadrature connection. If there is a requirement to supervise overcurrent elements for flows in opposite directions, such as can happen through a bus-tie breaker, program two phase directional elements with opposite element characteristic angle (ECA) settings.

To increase security for three phase faults very close to the VTs used to measure the polarizing voltage, a voltage memory feature is incorporated. This feature stores the polarizing voltage the moment before the voltage collapses, and uses it to determine direction. The voltage memory remains valid for one second after the voltage has collapsed.

The main component of the phase directional element is the phase angle comparator with two inputs: the operating signal (phase current) and the polarizing signal (the line voltage, shifted in the leading direction by the characteristic angle, ECA).

The table shows the operating and polarizing signals used for phase directional control.

Table 5-39: Operating and polarizing signals

Phase	Operating signal	Polarizing signal V_{pol}	
		ABC phase sequence	ACB phase sequence
A	angle of IA	angle of VBC × (1∠ECA)	angle of VCB × (1∠ECA)
B	angle of IB	angle of VCA × (1∠ECA)	angle of VAC × (1∠ECA)
C	angle of IC	angle of VAB × (1∠ECA)	angle of VBA × (1∠ECA)

Mode of operation

- When the function is "Disabled" or the operating current is below 5% × CT nominal, the element output is logic "0"
- When the function is "Enabled," the operating current is above 5% × CT nominal, and the polarizing voltage is above the **PRODUCT SETUP ⇨⇩ DISPLAY PROPERTIES ⇨⇩ VOLTAGE CUT-OFF LEVEL** value, the element output is dependent on the phase angle between the operating and polarizing signals:
  - The element output is logic "0" when the operating current is within polarizing voltage ±90°
  - For all other angles, the element output is logic "1"
- Once the voltage memory has expired, the phase overcurrent elements under directional control can be set to block or trip on overcurrent as follows:
  - When **BLOCK WHEN V MEM EXP** is set to "Yes," the directional element blocks the operation of any phase overcurrent element under directional control when voltage memory expires
  - When **BLOCK WHEN V MEM EXP** is set to "No," the directional element allows tripping of phase overcurrent elements under directional control when voltage memory expires

In all cases, directional blocking is permitted to resume when the polarizing voltage becomes greater than the polarizing voltage threshold.

Settings

PHASE DIR 1 FUNCTION — This setting enables and disables the phase directional overcurrent protection element.

PHASE DIR 1 SIGNAL SOURCE — This setting is used to select the source for the operating and polarizing signals. The operating current for the phase directional element is the phase current for the selected current source. The polarizing voltage is the line voltage from the phase VTs, based on the 90° or quadrature connection and shifted in the leading direction by the element characteristic angle (ECA).

PHASE DIR 1 BLOCK — Assertion of the operand assigned to this setting blocks operation of the phase directional overcurrent element.

PHASE DIR 1 ECA — This setting specifies the element characteristic angle, that is, the angle by which the polarizing voltage is shifted in the leading direction to achieve dependable operation. In the design of the UR-series elements, a block is applied to an element by asserting logic 1 at the blocking input. Program the phase directional overcurrent element using this setting so that the output is logic 1 for current in the non-tripping direction.

PHASE DIR 1 POL V THRESHOLD — This setting is used to establish the minimum level of voltage for which the phase angle measurement is healthy and reliable. Do not set this setting too low because the element can continue using the actual voltage already distorted by the fault instead of using healthy memory voltage—this can cause wrong directional discrimination.

PHASE DIR 1 BLOCK WHEN V MEM EXP — This setting is used to select the required operation upon expiration of voltage memory. When set to "Yes," the directional element blocks the operation of any phase overcurrent element under directional control, when voltage memory expires. When set to "No," the directional element allows tripping of phase overcurrent elements under directional control.

PHASE DIR 1 EVENTS — This setting enables and disables the logging of phase directional overcurrent events in the sequence of events recorder.

NOTE

The phase directional element responds to the forward load current. In the case of a following reverse fault, the element needs some time—in the order of 8 ms—to establish a blocking signal. Some protection elements, such as instantaneous overcurrent, respond to reverse faults before the blocking signal is established. Therefore, a coordination time of at least 10 ms must be added to all the instantaneous protection elements under the supervision of the phase directional element. If current reversal is of concern, a longer delay—in the order of 20 ms—is needed.

Figure 5-142: Phase directional logic

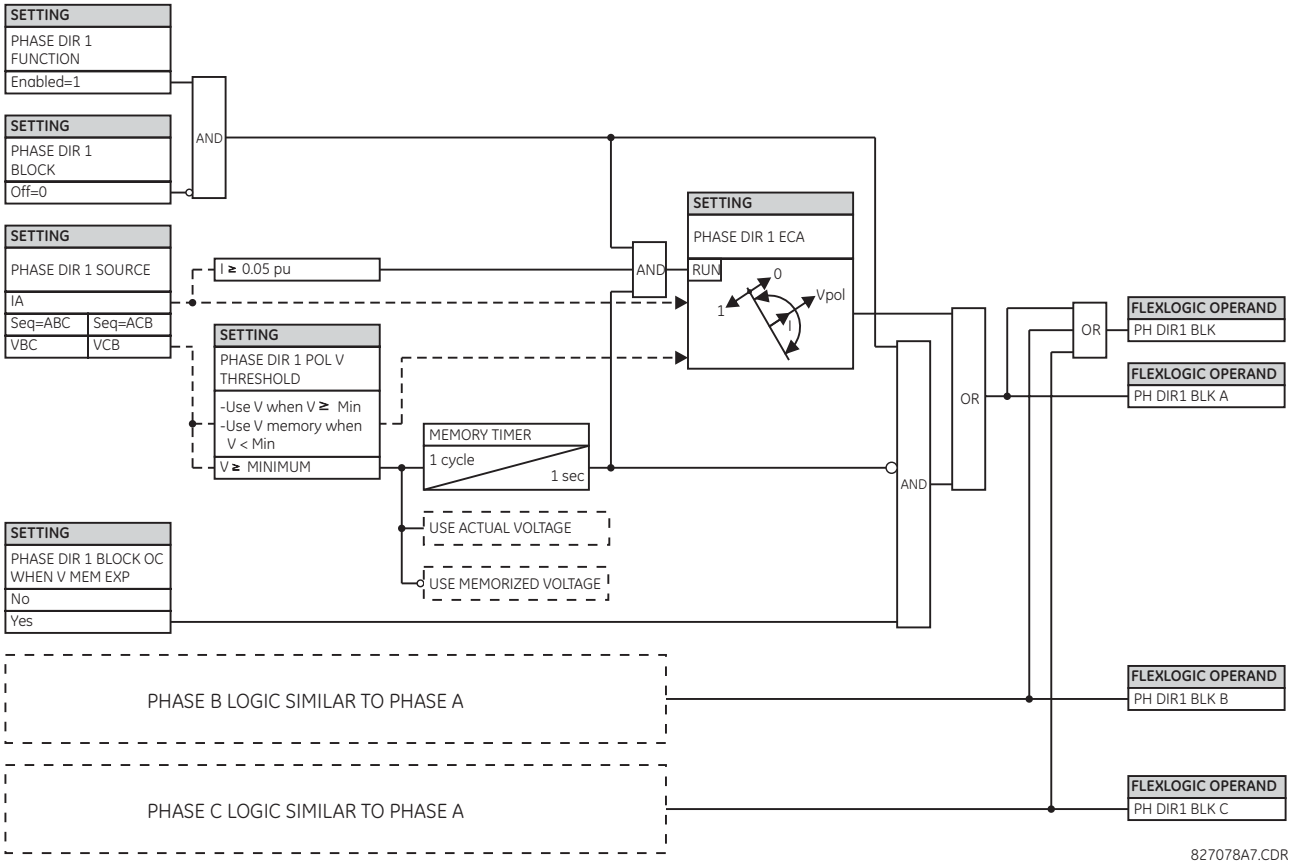

5.8.5 Neutral current

5.8.5.1 Menu

SETTINGS ⇨⇩ GROUPED ELEMENTS ⇨ SETTING GROUP 1(6) ⇨⇩ NEUTRAL CURRENT

■ NEUTRAL CURRENT ■	⇔	■ NEUTRAL TOC 1 ■	See below
		⇩	
	⇕	■ NEUTRAL TOC 6 ■	
	⇕	■ NEUTRAL IOC 1 ■	See page 5-295
		⇩	
	⇕	■ NEUTRAL IOC 12 ■	
	⇕	■ NEUTRAL ■ DIRECTIONAL OC1	See page 5-297
		⇩	
	⇧	■ NEUTRAL ■ DIRECTIONAL OC3	

5

5.8.5.2 Neutral time overcurrent (ANSI 51N, IEC PTOC)

SETTINGS ⇨⇩ GROUPED ELEMENTS ⇨ SETTING GROUP 1(6) ⇨⇩ NEUTRAL CURRENT ⇨ NEUTRAL TOC1(6)

■ NEUTRAL TOC 1 ■	⇔	NEUTRAL TOC1 FUNCTION: Disabled	Range: Disabled, Enabled
	⇕	NEUTRAL TOC1 SIGNAL SOURCE: SRC 1	Range: SRC 1, SRC 2, SRC 3, SRC 4, SRC 5, SRC 6
	⇕	NEUTRAL TOC1 INPUT: Phasor	Range: Phasor, RMS
	⇕	NEUTRAL TOC1 PICKUP: 1.000 pu	Range: 0.020 to 30.000 pu in steps of 0.001
	⇕	NEUTRAL TOC1 CURVE: IEEE Mod Inv	Range: see Overcurrent Curve Types table
	⇕	NEUTRAL TOC1 TD MULTIPLIER: 1.00	Range: 0.00 to 600.00 in steps of 0.01
	⇕	NEUTRAL TOC1 RESET: Instantaneous	Range: Instantaneous, Timed
	⇕	NEUTRAL TOC1 BLOCK: Off	Range: FlexLogic operand
	⇕	NEUTRAL TOC1 TARGET: Self-reset	Range: Self-reset, Latched, Disabled
	⇧	NEUTRAL TOC1 EVENTS: Disabled	Range: Disabled, Enabled

The neutral time overcurrent element can provide a desired time-delay operating characteristic versus the applied current or be used as a simple definite time element. The neutral current input value is a quantity calculated as 3I0 from the phase currents and can be programmed as fundamental phasor magnitude or total waveform RMS magnitude as required by the application.

Two methods of resetting operation are available: "Timed" and "Instantaneous" (see the Inverse TOC Curve Characteristics section for details on curve setup, trip times, and reset operation). When the element is blocked, the time accumulator resets according to the reset characteristic. For example, if the element reset characteristic is set to "Instantaneous" and the element is blocked, the time accumulator clears immediately.

NEUTRAL TOC1 FUNCTION — This setting enables and disables the neutral time overcurrent protection element.

NEUTRAL TOC1 SIGNAL SOURCE — This setting selects the signal source for the neutral time overcurrent protection element.

NEUTRAL TOC1 INPUT — This setting selects how neutral current input quantities are interpreted by the N60. Inputs can be selected as fundamental phasor magnitudes or total waveform RMS magnitudes as required by the application.

NEUTRAL TOC1 PICKUP — This setting specifies the neutral time overcurrent pickup level in per-unit values.

NEUTRAL TOC1 CURVE — This setting selects the inverse time overcurrent curve style.

NEUTRAL TOC1 TD MULTIPLIER — This setting specifies a multiple of the base curve shape specified by the **CURVE** setting. Programming this value to zero results in an instantaneous response to all current levels above pickup.

NEUTRAL TOC1 RESET — The "Instantaneous" reset method is intended for applications with other relays, such as most static relays, which set the energy capacity directly to zero when the current falls below the reset threshold. The "Timed" reset method can be used where the relay must coordinate with electromechanical relays.

NEUTRAL TOC1 BLOCK — Assertion of the operand assigned to this setting blocks operation of the neutral time overcurrent element.

NEUTRAL TOC1 EVENTS — This setting enables and disables the logging of neutral time overcurrent events in the sequence of events recorder.

Figure 5-143: Neutral time overcurrent 1 logic

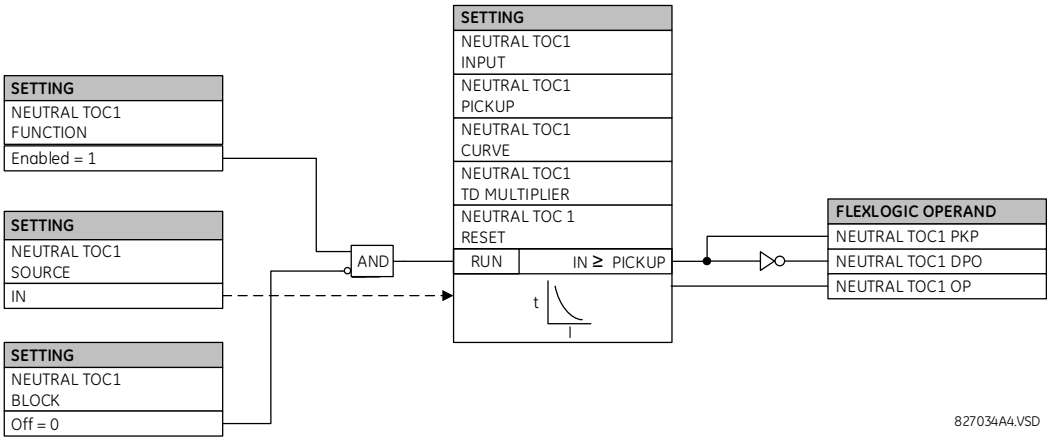

5.8.5.3 Neutral instantaneous overcurrent (ANSI 50N, IEC PIOC)

SETTINGS ⇨⇩ GROUPED ELEMENTS ⇨ SETTING GROUP 1(6) ⇨⇩ NEUTRAL CURRENT ⇨⇩ NEUTRAL IOC1(12)

■ NEUTRAL IOC 1 ■	⇔	NEUTRAL IOC1 FUNCTION: Disabled	Range: Disabled, Enabled
	⇩	NEUTRAL IOC1 SIGNAL SOURCE: SRC 1	Range: SRC 1, SRC 2, SRC 3, SRC 4, SRC 5, SRC 6
	⇩	NEUTRAL IOC1 PICKUP: 1.000 pu	Range: 0.020 to 30.000 pu in steps of 0.001
	⇩	NEUTRAL IOC1 PICKUP DELAY: 0.00 s	Range: 0.00 to 600.00 s in steps of 0.01
	⇩	NEUTRAL IOC1 RESET DELAY: 0.00 s	Range: 0.00 to 600.00 s in steps of 0.01

⇕	**NEUTRAL IOC1 BLOCK: Off**	Range: FlexLogic operand
⇕	**NEUTRAL IOC1 TARGET: Self-reset**	Range: Self-reset, Latched, Disabled
⇧	**NEUTRAL IOC1 EVENTS: Disabled**	Range: Disabled, Enabled

The neutral instantaneous overcurrent element can be used as an instantaneous function with no intentional delay or as a definite time function. The element essentially responds to the magnitude of a neutral current fundamental frequency phasor calculated from the phase currents. A positive-sequence restraint is applied for better performance. A small portion (6.25%) of the positive-sequence current magnitude is subtracted from the zero-sequence current magnitude when forming the operating quantity of the element as follows:

$$I_{op} = 3 \times (|I_0| - K \times |I_1|) \text{ where } K = 1/16 \qquad \textbf{Eq. 5-18}$$

The positive-sequence restraint allows for more sensitive settings by counterbalancing spurious zero-sequence currents resulting from:

- System unbalances under heavy load conditions
- Transformation errors of current transformers (CTs) during double-line and three-phase faults
- Switch-off transients during double-line and three-phase faults

The positive-sequence restraint must be considered when testing for pickup accuracy and response time (multiple of pickup). The operating quantity depends on how test currents are injected into the relay, where single-phase injection is $I_{op} = 0.9375 \times I_{injected}$ and three-phase pure zero-sequence injection is $I_{op} = 3 \times I_{injected}$

NEUTRAL IOC1 FUNCTION — This setting enables and disables the neutral instantaneous overcurrent protection element.

NEUTRAL IOC1 SIGNAL SOURCE — This setting selects the signal source for the neutral instantaneous overcurrent protection element.

NEUTRAL IOC1 PICKUP — This setting specifies the neutral instantaneous overcurrent pickup level in per-unit values.

NEUTRAL IOC1 PICKUP DELAY — This setting delays the assertion of the NEUTRAL IOC OP operands. It is used to achieve timing coordination with other elements and relays.

NEUTRAL IOC1 RESET DELAY — This setting specifies a delay for the reset of the neutral instantaneous overcurrent element between the operate output state and the return to logic 0 after the input passes outside the defined pickup range. This setting is used to ensure that the relay output contacts are closed long enough to ensure reception by downstream equipment.a

NEUTRAL IOC1 BLOCK — Assertion of the operand assigned to this setting blocks operation of the neutral instantaneous overcurrent element.

NEUTRAL IOC1 EVENTS — This setting enables and disables the logging of neutral instantaneous overcurrent events in the sequence of events recorder.

Figure 5-144: Neutral IOC1 logic

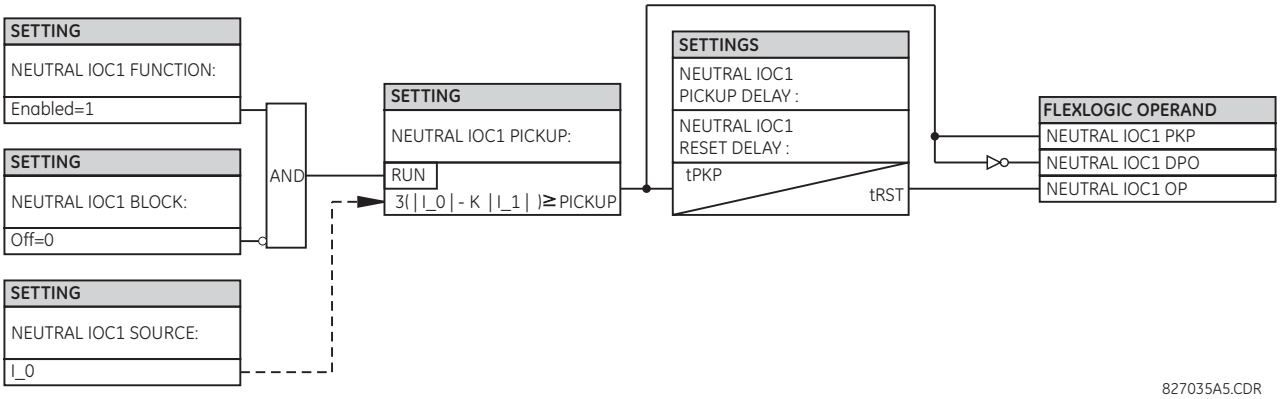

5.8.5.4 Neutral directional overcurrent (ANSI 67N, IEC PDEF/PTOC)

SETTINGS ⇨⇩ GROUPED ELEMENTS ⇨ SETTING GROUP 1(6) ⇨⇩ NEUTRAL CURRENT ⇨⇩ NEUTRAL DIRECTIONAL OC1(3)

■ NEUTRAL ■ DIRECTIONAL OC1	⇔	**NEUTRAL DIR OC1 FUNCTION: Disabled**	Range: Disabled, Enabled
	⇩	**NEUTRAL DIR OC 1 SOURCE: SRC 1**	Range: SRC 1, SRC 2, SRC 3, SRC 4, SRC 5, SRC 6
	⇩	**NEUTRAL DIR OC1 POLARIZING: Voltage**	Range: Voltage, Current, Dual, Dual-V, Dual-I
	⇩	**NEUTRAL DIR OC1 POL VOLT: Calculated V0**	Range: Calculated V0, Measured VX
	⇩	**NEUTRAL DIR OC1 OP CURR: Calculated 3I0**	Range: Calculated 3I0, Measured IG
	⇩	**NEUTRAL DIR OC1 POS-SEQ RESTRAINT: 0.063**	Range: 0.000 to 0.500 in steps of 0.001
	⇩	**NEUTRAL DIR OC1 OFFSET: 0.00 Ω**	Range: 0.00 to 250.00 Ω in steps of 0.01
	⇩	**NEUTRAL DIR OC1 FWD ECA: 75° Lag**	Range: –90 to 90° in steps of 1
	⇩	**NEUTRAL DIR OC1 FWD LIMIT ANGLE: 90°**	Range: 40 to 90° in steps of 1
	⇩	**NEUTRAL DIR OC1 FWD PICKUP: 0.050 pu**	Range: 0.006 to 30.000 pu in steps of 0.001
	⇩	**NEUTRAL DIR OC1 REV LIMIT ANGLE: 90°**	Range: 40 to 90° in steps of 1
	⇩	**NEUTRAL DIR OC1 REV PICKUP: 0.050 pu**	Range: 0.006 to 30.000 pu in steps of 0.001
	⇩	**NEUTRAL DIR OC1 BLK: Off**	Range: FlexLogic operand
	⇩	**NEUTRAL DIR OC1 TARGET: Self-reset**	Range: Self-reset, Latched, Disabled
	⇧	**NEUTRAL DIR OC1 EVENTS: Disabled**	Range: Disabled, Enabled

The neutral directional overcurrent element provides both forward and reverse fault direction indications for the NEUTRAL DIR OC1 FWD and NEUTRAL DIR OC1 REV operands, respectively. The output operand is asserted if the magnitude of the operating current is above a pickup level (overcurrent unit) and the fault direction is seen as forward or reverse, respectively (directional unit).

The **overcurrent unit** responds to the magnitude of a fundamental frequency phasor of either the neutral current calculated from the phase currents or the ground current. There are separate pickup settings for the forward-looking and reverse-looking functions. If set to use the calculated 3I_0, the element applies a positive-sequence restraint for better performance: a small user-programmable portion of the positive-sequence current magnitude is subtracted from the zero-sequence current magnitude when forming the operating quantity.

$$I_{op} = 3 \times (|I_0| - K \times |I_1|) \qquad \textbf{Eq. 5-19}$$

The positive-sequence restraint allows for more sensitive settings by counterbalancing spurious zero-sequence currents resulting from

- System unbalances under heavy load conditions
- Transformation errors of current transformers (CTs) during double-line and three-phase faults

- Switch-off transients during double-line and three-phase faults

The positive-sequence restraint must be considered when testing for pickup accuracy and response time (multiple of pickup). The operating quantity depends on the way the test currents are injected into the relay (single-phase injection: $I_{op} = (1 - K) \times I_{injected}$; three-phase pure zero-sequence injection: $I_{op} = 3 \times I_{injected}$.

The positive-sequence restraint is removed for low currents. If the positive-sequence current is below 0.8 pu, the restraint is removed by changing the constant K to zero. This facilitates better response to high-resistance faults when the unbalance is very small and there is no danger of excessive CT errors as the current is low.

The **directional unit** uses the zero-sequence current (I_0) or ground current (IG) for fault direction discrimination and can be programmed to use either zero-sequence voltage ("Calculated V0" or "Measured VX"), ground current (IG), or both for polarizing. Both zero-sequence current (I_0) and ground current (IG) must be greater than the **PRODUCT SETUP ⇨⇩ DISPLAY PROPERTIES ⇨⇩ CURRENT CUT-OFF LEVEL** setting value to be validated as the operating quantity for directional current. The following tables define the neutral directional overcurrent element. V_0 is the zero-sequence voltage, I_0 is the zero-sequence current, ECA is the element characteristic angle, and IG is the ground current.

Table 5-40: Quantities for "calculated 3I0" configuration

Directional unit quantities				Overcurrent unit quantities
Polarizing mode	**Direction**	**Compared phasors**		
Voltage	Forward	–V_0 + Z_offset × I_0	I_0 × 1∠ECA	$I_{op} = 3 \times (\lvert I_0\rvert - K \times \lvert I_1\rvert)$ if $\lvert I_1\rvert > 0.8$ pu $I_{op} = 3 \times (\lvert I_0\rvert)$ if $\lvert I_1\rvert \le 0.8$ pu
	Reverse	–V_0 + Z_offset × I_0	–I_0 × 1∠ECA	
Current	Forward	IG	I_0	
	Reverse	IG	–I_0	
Dual, Dual-V, Dual-I	Forward	–V_0 + Z_offset × I_0	I_0 × 1∠ECA	
		or		
		IG	I_0	
	Reverse	–V_0 + Z_offset × I_0	–I_0 × 1∠ECA	
		or		
		IG	–I_0	

Table 5-41: Quantities for "measured IG" configuration

Directional unit quantities				Overcurrent unit quantities
Polarizing mode	**Direction**	**Compared phasors**		
Voltage	Forward	–V_0 + Z_offset × IG/3	IG × 1∠ECA	$I_{op} = \lvert IG\rvert$
	Reverse	–V_0 + Z_offset × IG/3	–IG × 1∠ECA	

where

$$V_0 = \frac{1}{3}(VAG + VBG + VCG) = \text{zero sequence voltage}$$

$$I_0 = \frac{1}{3}IN = \frac{1}{3}(IA + IB + IC) = \text{zero sequence current}$$

ECA = element characteristic angle
IG = ground current
Z_offset is the offset impedance, for which magnitude is the OFFSET setting and angle is the FWD ECA

When **NEUTRAL DIR OC1 POL VOLT** is set to "Measured VX," one-third of this voltage is used in place of V_0. The following figure explains the usage of the voltage polarized directional unit of the element.

The figure shows the voltage-polarized phase angle comparator characteristics for a phase A to ground fault, with:

- ECA = 90° (element characteristic angle = centerline of operating characteristic)
- FWD LA = 80° (forward limit angle = the ± angular limit with the ECA for operation)
- REV LA = 80° (reverse limit angle = the ± angular limit with the ECA for operation)

The element incorporates a current reversal logic. If the reverse direction is indicated for at least 1.25 of a power system cycle, the prospective forward indication is delayed by 1.5 of a power system cycle. The element is designed to emulate an electromechanical directional device. Larger operating and polarizing signals results in faster directional discrimination bringing more security to the element operation.

The forward-looking function is designed to be more secure as compared to the reverse-looking function, and therefore is to be used for the tripping direction. The reverse-looking function is designed to be faster as compared to the forward-looking function and is to be used for the blocking direction. This allows for better protection coordination.

Take the bias into account when using the neutral directional overcurrent element to directionalize other protection elements.

Figure 5-145: Neutral directional voltage-polarized characteristics

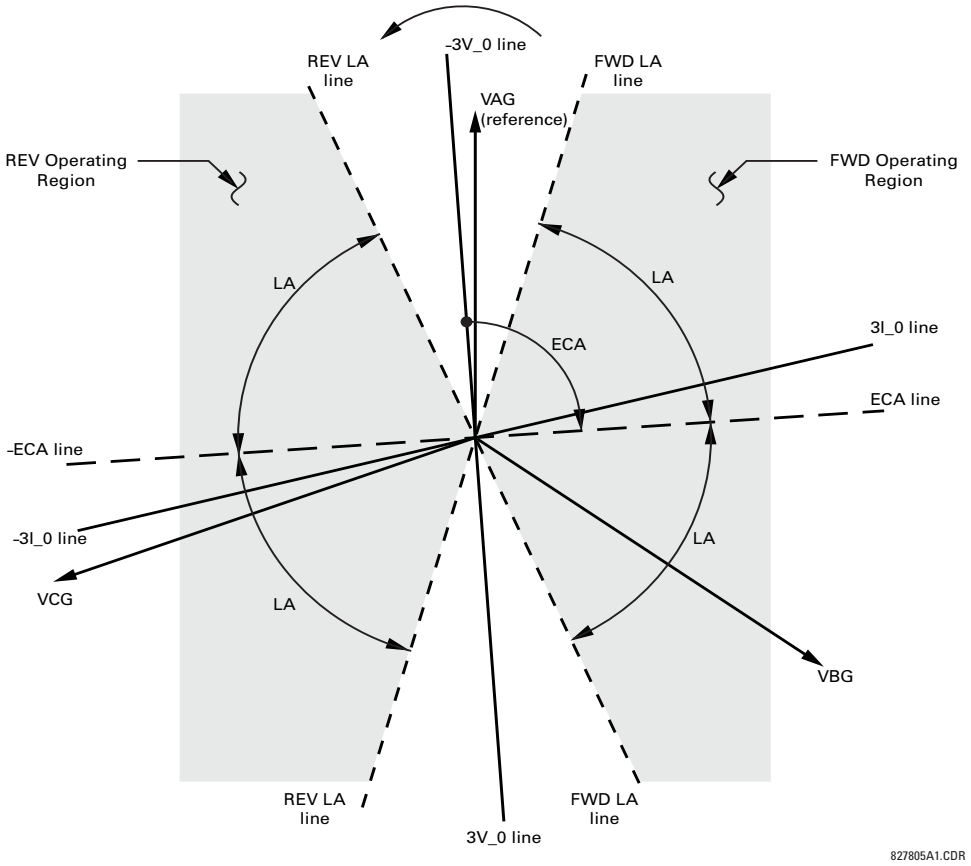

NEUTRAL DIR OC1 POLARIZING — This setting selects the polarizing mode for the directional unit.

- If "Voltage" polarizing is selected, the element uses the zero-sequence voltage angle for polarization. The user can use either the zero-sequence voltage V_0 calculated from the phase voltages, or the zero-sequence voltage supplied externally as the auxiliary voltage V_X, both from the **NEUTRAL DIR OC1 SOURCE**.

  The calculated V_0 can be used as polarizing voltage only if the voltage transformers are connected in Wye. The auxiliary voltage can be used as the polarizing voltage provided **SYSTEM SETUP ⇨ AC INPUTS ⇨⇩ VOLTAGE BANK ⇨⇩ AUXILIARY VT CONNECTION** is set to "Vn" and the auxiliary voltage is connected to a zero-sequence voltage source (such as broken delta connected secondary of VTs).

  The zero sequence voltage V_0 must be greater than **PRODUCT SETUP ⇨⇩ DISPLAY PROPERTIES ⇨⇩ VOLTAGE CUT-OFF LEVEL** to be validated for use as polarizing signal. Additionally, when offset impedance is applied and zero-sequence current is above 0.2 pu, compensated zero-sequence voltage -V_0 + Z_offset × I_0 has to be above 0.02 pu in order to discriminate fault direction; otherwise when zero-sequence current is less than 0.2 pu, -V_0 is then used as the polarizing signal. If the polarizing signal is invalid, neither forward nor reverse indication is given.

- If “Current” polarizing is selected, the element uses the ground current angle connected externally and configured under **NEUTRAL OC1 SOURCE** for polarization. The ground CT must be connected between the ground and neutral point of an adequate local source of ground current. The ground current must be greater than **PRODUCT SETUP ⇨⇩ DISPLAY PROPERTIES ⇨⇩ CURRENT CUT-OFF LEVEL** to be validated as a polarizing signal. If the polarizing signal is not valid, neither forward nor reverse indication is given. In addition, the zero-sequence current (I_0) must be greater than the **PRODUCT SETUP ⇨⇩ DISPLAY PROPERTIES ⇨⇩ CURRENT CUT-OFF LEVEL** setting value.

  For a choice of current polarizing, it is recommended that the polarizing signal be analyzed to ensure that a known direction is maintained irrespective of the fault location. For example, if using an autotransformer neutral current as a polarizing source, ensure that a reversal of the ground current does not occur for a high-side fault. Assume that the low-side system impedance is minimal when checking for this condition. A similar situation arises for a wye/delta/wye transformer, where current in one transformer winding neutral can reverse when faults on both sides of the transformer are considered.
- If “Dual” polarizing is selected, the element performs both directional comparisons as described. A given direction is confirmed if either voltage or current comparators indicate so. If a conflicting (simultaneous forward and reverse) indication occurs, the forward direction overrides the reverse direction.
- If "Dual-V" polarizing is selected, "Voltage" polarizing is performed and "Current" polarizing is ignored if the voltage polarizing signal is valid; otherwise "Current" polarizing is performed if the current polarizing signal is valid. If neither of them is valid, neither forward nor reverse indication is given.
- If "Dual-I" polarizing is selected, "Current" polarizing is performed and "Voltage" polarizing is ignored if the current polarizing signal is valid; otherwise "Voltage" polarizing is performed if the voltage polarizing signal is valid. If neither of them is valid, neither forward nor reverse indication is given.

NEUTRAL DIR OC1 POL VOLT — Selects the polarizing voltage used by the directional unit when "Voltage," "Dual," "Dual-V," or "Dual-I" polarizing mode is set. The polarizing voltage can be programmed to be either the zero-sequence voltage calculated from the phase voltages ("Calculated V0") or supplied externally as an auxiliary voltage ("Measured VX").

NEUTRAL DIR OC1 OP CURR — This setting indicates whether the 3I_0 current calculated from the phase currents, or the ground current is used by this protection. This setting acts as a switch between the neutral and ground modes of operation (ANSI devices 67N and 67G). If set to “Calculated 3I0,” the element uses the phase currents and applies the positive-sequence restraint. If set to “Measured IG,” the element uses ground current supplied to the ground CT of the CT bank configured as **NEUTRAL DIR OC1 SOURCE**. If this setting is “Measured IG,” then the **NEUTRAL DIR OC1 POLARIZING** setting must be “Voltage”, as it is not possible to use the ground current as an operating and polarizing signal simultaneously. IG current has to be above **PRODUCT SETUP ⇨⇩ DISPLAY PROPERTIES ⇨⇩ CURRENT CUT-OFF LEVEL** to be used as an operate quantity.

NEUTRAL DIR OC1 POS-SEQ RESTRAINT — This setting controls the amount of the positive-sequence restraint. Set it to 0.063 for backward compatibility with firmware revision 3.40 and older. Set it to zero to remove the restraint. Set it higher if large system unbalances or poor CT performance are expected.

NEUTRAL DIR OC1 OFFSET — This setting specifies the offset impedance used by this protection. The primary application for the offset impedance is to guarantee correct identification of fault direction on series compensated lines. In regular applications, the offset impedance ensures proper operation even if the zero-sequence voltage at the relaying point is very small. If this is the intent, the offset impedance is not to be larger than the zero-sequence impedance of the protected circuit. Practically, it shall be several times smaller. Enter the offset impedance in secondary ohms.

NEUTRAL DIR OC1 FWD ECA — This setting defines the characteristic angle (ECA) for the forward direction in the "Voltage" polarizing mode. The "Current" polarizing mode uses a fixed ECA of 0°. The ECA in the reverse direction is the angle set for the forward direction shifted by 180°.

NEUTRAL DIR OC1 FWD LIMIT ANGLE — This setting defines a symmetrical (in both directions from the ECA) limit angle for the forward direction.

NEUTRAL DIR OC1 FWD PICKUP — This setting defines the pickup level for the overcurrent unit of the element in the forward direction. When selecting this setting, keep in mind that the design uses a positive-sequence restraint technique for the “Calculated 3I0” mode of operation.

NEUTRAL DIR OC1 REV LIMIT ANGLE — This setting defines a symmetrical (in both directions from the ECA) limit angle for the reverse direction.

NEUTRAL DIR OC1 REV PICKUP — This setting defines the pickup level for the overcurrent unit of the element in the reverse direction. When selecting this setting, keep in mind that the design uses a positive-sequence restraint technique for the “Calculated 3I0” mode of operation.

Figure 5-146: Neutral directional overcurrent logic

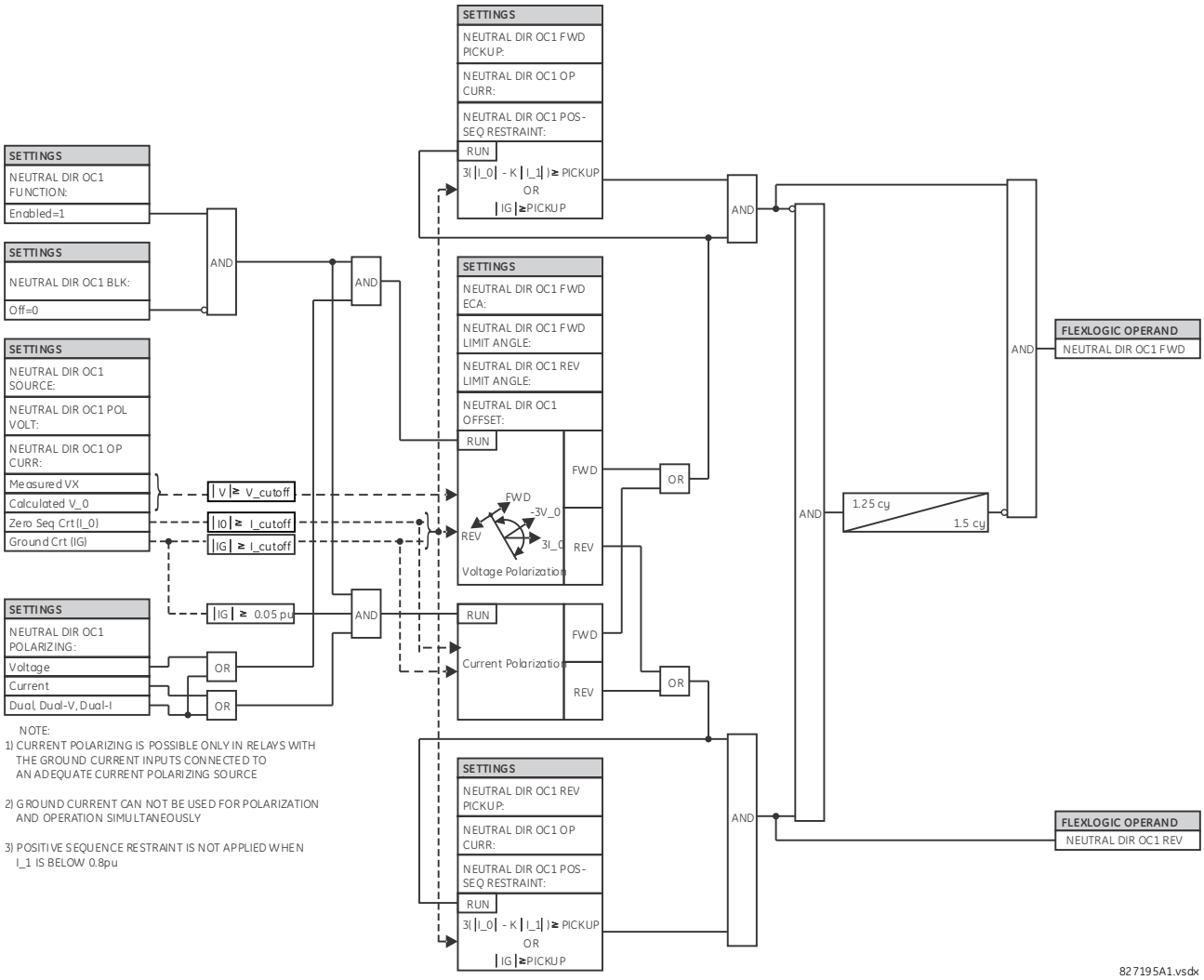

5.8.6 Ground current

5.8.6.1 Menu

SETTINGS ⇨⇩ GROUPED ELEMENTS ⇨ SETTING GROUP 1(6) ⇨⇩ GROUND CURRENT

■ GROUND CURRENT ■	⇔	■ GROUND TOC1 ■	See below
		⇩	
	⇕	■ GROUND TOC6 ■	
	⇕	■ GROUND IOC1 ■	See page 5-303
		⇩	
	⇧	■ GROUND IOC12 ■	

5.8.6.2 Ground time overcurrent (ANSI 51G, IEC PTOC)

SETTINGS ⇨⇩ GROUPED ELEMENTS ⇨ SETTING GROUP 1(6) ⇨⇩ GROUND CURRENT ⇨ GROUND TOC1(6)

■ GROUND TOC1 ■	⇔	GROUND TOC1 FUNCTION: Disabled	Range: Disabled, Enabled
	⇩	GROUND TOC1 SIGNAL SOURCE: SRC 1	Range: SRC 1, SRC 2, SRC 3, SRC 4, SRC 5, SRC 6
	⇩	GROUND TOC1 INPUT: Phasor	Range: Phasor, RMS
	⇩	GROUND TOC1 PICKUP: 1.000 pu	Range: 0.020 to 30.000 pu in steps of 0.001
	⇩	GROUND TOC1 CURVE: IEEE Mod Inv	Range: see the Overcurrent Curve Types table
	⇩	GROUND TOC1 TD MULTIPLIER: 1.00	Range: 0.00 to 600.00 in steps of 0.01
	⇩	GROUND TOC1 RESET: Instantaneous	Range: Instantaneous, Timed
	⇩	GROUND TOC1 BLOCK: Off	Range: FlexLogic operand
	⇩	GROUND TOC1 TARGET: Self-reset	Range: Self-reset, Latched, Disabled
	⇧	GROUND TOC1 EVENTS: Disabled	Range: Disabled, Enabled

5

This element can provide a required time-delay operating characteristic versus the applied current or be used as a simple definite time element. The ground current input value is the quantity measured by the ground input CT and is the fundamental phasor or RMS magnitude. Two methods of resetting operation are available: "Timed" and "Instantaneous" (see the Inverse TOC Curve Characteristics section for details). When the element is blocked, the time accumulator resets according to the reset characteristic. For example, if the element reset characteristic is set to "Instantaneous" and the element is blocked, the time accumulator clears immediately.

GROUND TOC1 FUNCTION — This setting enables and disables the ground time overcurrent protection element.

GROUND TOC1 SIGNAL SOURCE — This setting selects the signal source for the ground time overcurrent protection element.

GROUND TOC1 INPUT — This setting selects how ground current input quantities are interpreted by the N60. Inputs can be selected as fundamental phasor magnitudes or total waveform RMS magnitudes as required by the application.

GROUND TOC1 PICKUP — This setting specifies the ground time overcurrent pickup level in per-unit values. With a Process Bus Module, accuracy of the element is determined by the sum of the relay internal processing errors and input signal from the merging unit errors, which can be significant depending on the merging unit design. For low level pickup settings, especially less than 0.020 pu with a Process Bus Module, ensure that the selected merging unit meets given application accuracy requirements.

GROUND TOC1 CURVE — This setting selects the inverse time overcurrent curve style.

GROUND TOC1 TD MULTIPLIER — This setting specifies a multiple of the base curve shape specified by the **CURVE** setting. Programming this value to zero results in an instantaneous response to all current levels above pickup.

GROUND TOC1 RESET — The "Instantaneous" reset method is intended for applications with other relays, such as most static relays, which set the energy capacity directly to zero when the current falls below the reset threshold. The "Timed" reset method can be used where the relay must coordinate with electromechanical relays.

GROUND TOC1 BLOCK — Assertion of the operand assigned to this setting blocks operation of the ground time overcurrent element.

NOTE

These elements measure the current that is connected to the ground channel of a CT/VT module. The conversion range of a standard channel is from 0.02 to 46 times the CT rating.

Figure 5-147: Ground TOC1 logic

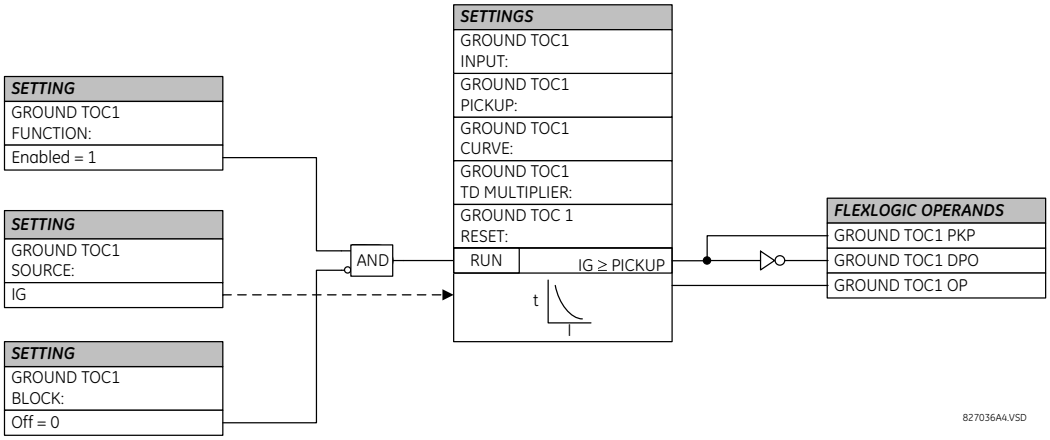

5.8.6.3 Ground instantaneous overcurrent (ANSI 50G, IEC PIOC)

SETTINGS ⇨⇩ GROUPED ELEMENTS ⇨ SETTING GROUP 1(6) ⇨⇩ GROUND CURRENT ⇨⇩ GROUND IOC1(12)

■ GROUND IOC1 ■	⇔	**GROUND IOC 1 FUNCTION: Disabled**	Range: Disabled, Enabled
	⇩	**GROUND IOC 1 SIGNAL SOURCE: SRC 1**	Range: SRC 1, SRC 2, SRC 3, SRC 4, SRC 5, SRC 6
	⇩	**GROUND IOC 1 PICKUP: 1.000 pu**	Range: 0.020 to 30.000 pu in steps of 0.001
	⇩	**GROUND IOC 1 PICKUP DELAY: 0.00 s**	Range: 0.00 to 600.00 s in steps of 0.01
	⇩	**GROUND IOC 1 RESET DELAY: 0.00 s**	Range: 0.00 to 600.00 s in steps of 0.01
	⇩	**GROUND IOC 1 BLOCK: Off**	Range: FlexLogic operand
	⇩	**GROUND IOC 1 TARGET: Self-reset**	Range: Self-reset, Latched, Disabled
	⇧	**GROUND IOC 1 EVENTS: Disabled**	Range: Disabled, Enabled

The ground instantaneous overcurrent element can be used as an instantaneous element with no intentional delay or as a definite time element. The ground current input is the quantity measured by the ground input CT and is the fundamental phasor magnitude.

GROUND IOC1 FUNCTION — This setting enables and disables the element.

GROUND IOC1 SIGNAL SOURCE — This setting selects the signal source for the element.

GROUND IOC1 PICKUP — This setting specifies the pickup level in per-unit values. With a Process Bus Module, accuracy of the element is determined by the sum of the relay internal processing errors and input signal from the merging unit errors, which can be significant depending on the merging unit design. For low level pickup settings, especially less than 0.020 pu with a Process Bus Module, ensure that the selected merging unit meets the given application accuracy requirements.

GROUND IOC1 PICKUP DELAY — This setting specifies the definite time delay after which the operate signal asserts.

GROUND IOC1 RESET DELAY — This setting specifies the reset time delay.

GROUND IOC1 BLOCK — Assertion of the operand assigned to this setting blocks operation of the element.

NOTE

These elements measure the current that is connected to the ground channel of a CT/VT module. The conversion range of a standard channel is from 0.02 to 46 times the CT rating.

Figure 5-148: Ground IOC1 logic

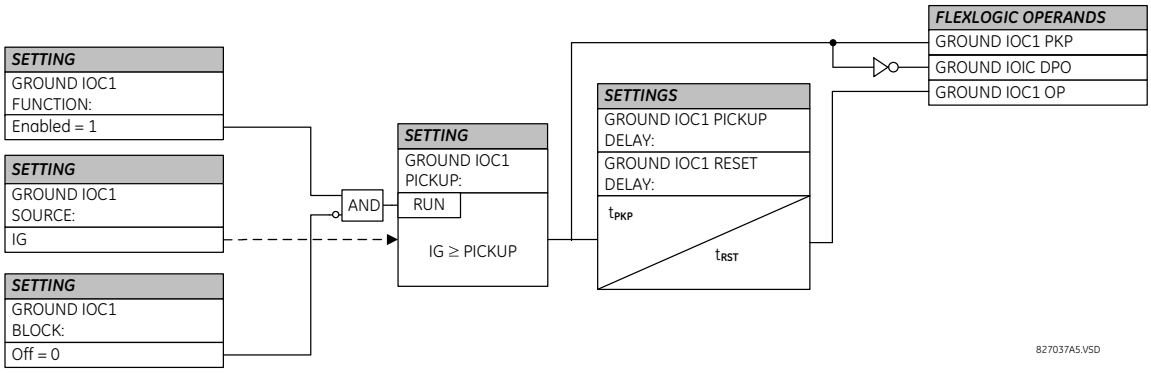

5.8.7 Voltage elements

5.8.7.1 Menu

SETTINGS ⇨⇩ GROUPED ELEMENTS ⇨ SETTING GROUP 1(6) ⇨⇩ VOLTAGE ELEMENTS

- **VOLTAGE ELEMENTS**
-

⇔

- **PHASE**
- **UNDERVOLTAGE1**

See page 5-306

⇩

⇕

- **PHASE**
- **UNDERVOLTAGE3**

⇕

- **PHASE**
- **OVERVOLTAGE1**

See page 5-308

⇩

⇧

- **PHASE**
- **OVERVOLTAGE3**

5.8.7.2 Application of voltage elements

These protection elements can be used for a variety of applications, such as

- **Undervoltage protection** — For voltage sensitive loads, such as induction motors, a drop in voltage increases the drawn current, which can cause dangerous overheating in the motor. The undervoltage protection feature can be used to either cause a trip or generate an alarm when the voltage drops below a specified voltage setting for a specified time delay.
- **Overvoltage protection** — Overvoltage elements can be used to protect voltage sensitive loads and system components against sustained overvoltage conditions
- **Permissive functions** — The undervoltage/overvoltage features can be used to block the functioning of external devices by operating an output relay when the voltage falls below/exceeds the specified voltage setting. The undervoltage/overvoltage features can also be used to block the functioning of other elements through the block feature of those elements.
- **Source transfer schemes** — In the event of undervoltage/overvoltage, a transfer signal can be generated to transfer a load from its normal source to a standby or emergency power source

5.8.7.3 Undervoltage inverse time curves

The undervoltage elements can be programmed to have an inverse time delay characteristic. If in the respective element the CURVE setting is set to Inverse Time, the undervoltage delay setting establishes the operating curve of the element as follows:

$$T = \frac{D}{\left(1 - \frac{V}{V_{pickup}}\right)} \qquad \textbf{Eq. 5-20}$$

where

T = operating time
D = undervoltage delay setting (D = 0.00 operates instantaneously)
V = secondary voltage applied to the relay
V_{pickup} = pickup level

For reset time, see the settings section of the applicable element.

Figure 5-149: Inverse time undervoltage curves

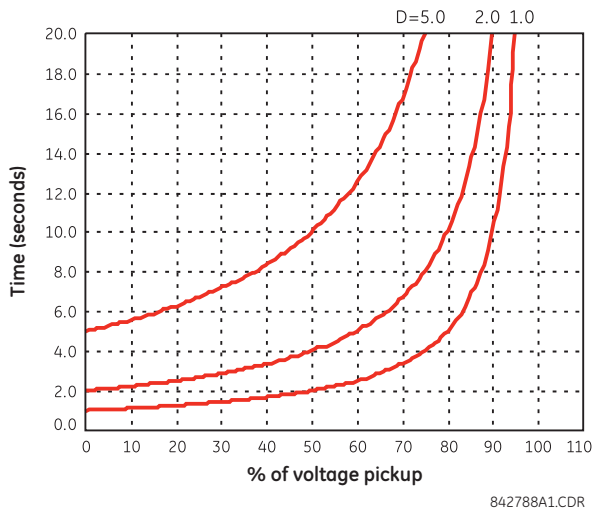

At 0% of pickup, the operating time equals the corresponding undervoltage element **DELAY** setting.

5.8.7.4 Overvoltage inverse time curves

The overvoltage elements can be programmed to have an inverse time delay characteristic. If in the respective element the CURVE setting is set to Inverse Time, the overvoltage pickup delay setting establishes the operating curve of the element as follows:

$$T = D / (V/V_{pickup} - 1) \qquad \textbf{Eq. 5-21}$$

where

T = operate time
D = overvoltage pickup delay setting (D = 0.00 operates instantaneously)
V = secondary voltage applied to the relay
V_{pickup} = pickup level

For reset time, see the settings section of the applicable element.

Figure 5-150: Inverse time overvoltage curve

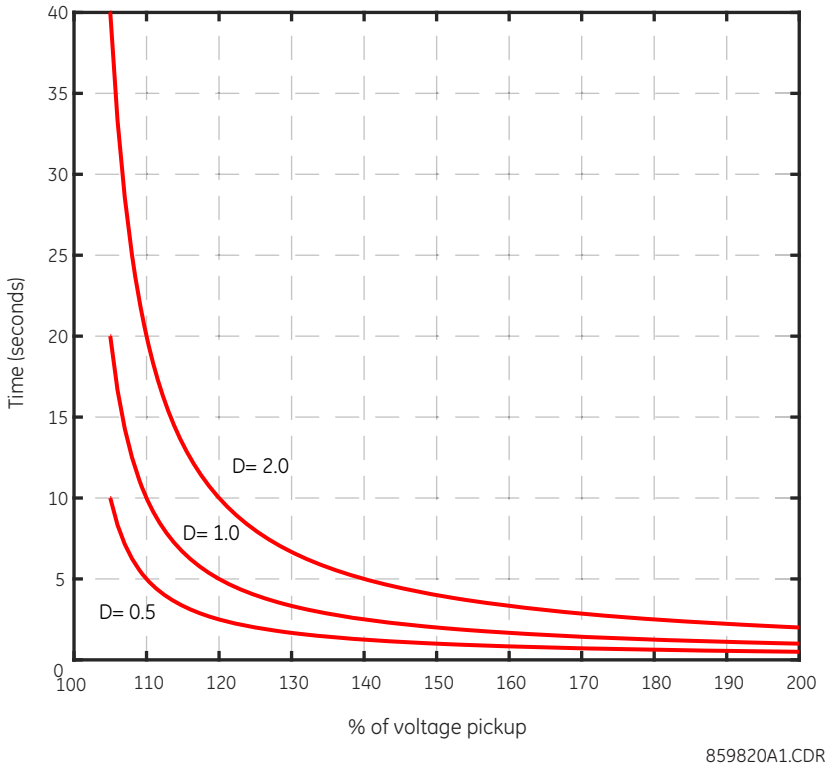

5

5.8.7.5 Phase undervoltage (ANSI 27P, IEC PTUV)

SETTINGS ⇨⇩ GROUPED ELEMENTS ⇨ SETTING GROUP 1(6) ⇨⇩ VOLTAGE ELEMENTS ⇨ PHASE UNDERVOLTAGE1(3)

■ PHASE ■ UNDERVOLTAGE1	⇔	**PHASE UV1 FUNCTION: Disabled**	Range: Disabled, Enabled
	⇩	**PHASE UV1 SIGNAL SOURCE: SRC 1**	Range: SRC 1, SRC 2, SRC 3, SRC 4, SRC 5, SRC 6
	⇩	**PHASE UV1 MODE: Phase to Ground**	Range: Phase to Ground, Phase to Phase
	⇩	**PHASE UV1 PICKUP: 1.000 pu**	Range: 0.004 to 3.000 pu in steps of 0.001
	⇩	**PHASE UV1 CURVE: Definite Time**	Range: Definite Time, Inverse Time, FlexCurves A through D
	⇩	**PHASE UV1 DELAY: 1.00 s**	Range: 0.00 to 600.00 s in steps of 0.01
	⇩	**PHASE UV1 RESET DELAY: 1.00 s**	Range: 0.00 to 600.00 s in steps of 0.01
	⇩	**PHASE UV1 MINIMUM VOLTAGE: 0.100 pu**	Range: 0.000 to 3.000 pu in steps of 0.001
	⇩	**PHASE UV1 BLOCK: Off**	Range: FlexLogic operand
	⇩	**PHASE UV1 TARGET: Self-reset**	Range: Self-reset, Latched, Disabled
	⇧	**PHASE UV1 EVENTS: Disabled**	Range: Disabled, Enabled

This element is used to give a time-delay operating characteristic versus the applied fundamental voltage.

PHASE UV1 SIGNAL SOURCE — Selects the signal source for the phase undervoltage protection element.

PHASE UV1 MODE — This setting defines the mode of operation that can be Phase-to-Phase or Phase-to-Ground voltage. Phase-to-ground or phase-to-phase voltages can be applied for wye VT connection, while phase-to-phase voltages can be applied for delta VT connections only.

PHASE UV1 PICKUP — This setting specifies the phase undervoltage protection element pickup level.

PHASE UV1 CURVE — This setting defines the timing characteristic of the element, which can be Definite Time, Inverse Time (per the curves described earlier in the Voltage Elements > Undervoltage Inverse Time Curves section), or FlexCurves A through D. The timing characteristic depends on this setting and the Delay setting that follows.

PHASE UV1 DELAY — This setting defines the operation time of the element.

When the **PHASE UV1 CURVE** setting is set to Definite Time, the **PHASE UV1 DELAY** setting defines definite time delay for element operation.

When the **PHASE UV1 CURVE** setting is set to Inverse Time, the **PHASE UV1 DELAY** setting defines the inverse curve time delay multiplier (D) that is used in the curve equation explained in the Voltage Elements > Undervoltage Inverse Time Curves section.

When the **PHASE UV1 CURVE** setting is set to one of the FlexCurves, the **PHASE UV1 DELAY** setting defines the FlexCurve time delay multiplier (D) that is used in the following curve equation:

$$T = D \times \text{FlexCurve time at } (V_{pkp}/V) \qquad \textbf{Eq. 5-22}$$

For FlexCurves configuration instructions, see the System Setup > FlexCurves section.

PHASE UV1 RESET DELAY — When the Curve setting is set to Definite Time or Inverse Time, the element resets when applied voltage exceeds the dropout voltage for the duration of the selected RESET DELAY setting.

When the Curve setting is set to one of the FlexCurves, the element reset is based on the equation and not the **PHASE UV1 RESET DELAY** setting.

As shown in the equation, because the element is supposed to operate in undervoltage condition, the multiple of pickup value that defines the point on the FlexCurve characteristic is derived from the ratio of the set pickup value to the measured voltage (and not the reverse). For example, if Pickup is set to 0.9 pu, when measured voltage is 0.82 pu, the ratio is 0.9/0.82 = 1.1. Therefore, in FlexCurve, the corresponding operate time is at 1.1 × PKP (not at 0.82 × PKP). On the other hand, when measured voltage is 1 pu, the ratio is 0.9/1 = 0.9. Therefore, in FlexCurve, the corresponding reset time is at 0.9 × PKP.

PHASE UV1 MINIMUM VOLTAGE — This setting selects the operating voltage below which the element is blocked (a setting of "0" allows a dead source to be considered a fault condition).

Figure 5-151: Phase undervoltage1 logic

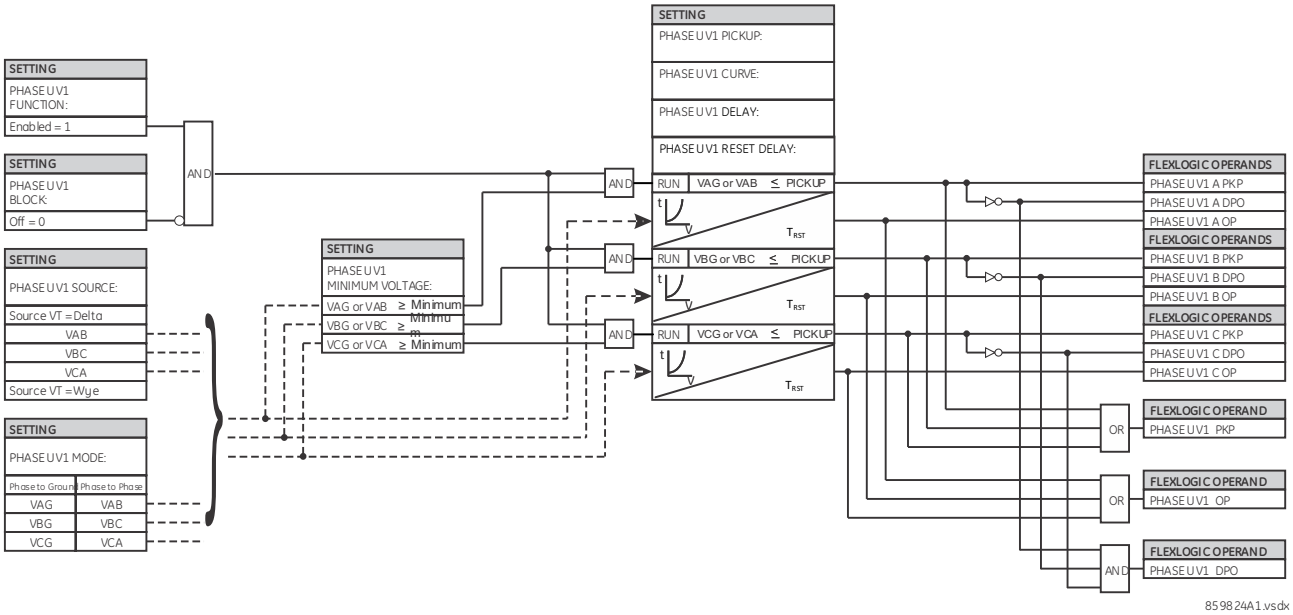

5.8.7.6 Phase overvoltage (ANSI 59P, IEC PTOV)

SETTINGS ⇨⇩ GROUPED ELEMENTS ⇨ SETTING GROUP 1(6) ⇨⇩ VOLTAGE ELEMENTS ⇨⇩ PHASE OVERVOLTAGE1(3)

■ PHASE ■ OVERVOLTAGE1	⇔	**PHASE OV1 FUNCTION: Disabled**	Range: Disabled, Enabled
	⇩	**PHASE OV1 SIGNAL SOURCE: SRC 1**	Range: SRC 1, SRC 2, SRC 3, SRC 4, SRC 5, SRC 6
	⇩	**PHASE OV1 MODE: Phase to Phase**	Range: Phase to Ground, Phase to Phase
	⇩	**PHASE OV1 PICKUP: 1.000 pu**	Range: 0.004 to 3.000 pu in steps of 0.001
	⇩	**PHASE OV1 CURVE: Definite Time**	Range: Definite Time, Inverse Time, FlexCurves A through D
	⇩	**PHASE OV1 PICKUP DELAY: 1.00 s**	Range: 0.00 to 600.00 s in steps of 0.01
	⇩	**PHASE OV1 RESET DELAY: 1.00 s**	Range: 0.00 to 600.00 s in steps of 0.01
	⇩	**PHASE OV1 BLOCK: Off**	Range: FlexLogic Operand
	⇩	**PHASE OV1 TARGET: Self-reset**	Range: Self-reset, Latched, Disabled
	⇧	**PHASE OV1 EVENTS: Disabled**	Range: Disabled, Enabled

This element gives a time-delay operating characteristic versus the applied fundamental voltage.

PHASE OV1 SIGNAL SOURCE — Selects the signal source for the phase overvoltage protection element.

PHASE OV1 MODE — This setting defines the mode of operation, which can be Phase-to-Phase or Phase-to-Ground voltage. Phase-to-ground or phase-to-phase voltages can be applied for wye VT connection, while phase-to-phase voltages can be applied for delta VT connections only.

PHASE OV1 PICKUP — This setting specifies phase overvoltage protection element pickup level.

PHASE OV1 CURVE — This setting defines the timing characteristic of the element, which can be: Definite Time, Inverse Time (per the curves described in the Voltage Elements > Overvoltage Inverse Time Curves section), FlexCurves A through D. The timing characteristic depends on this setting and the Pickup Delay setting that follows.

PHASE OV1 PICKUP DELAY — This setting defines the operation time of the element.

When the **PHASE OV1 CURVE** setting is set to Definite Time, the **PHASE OV1 PICKUP DELAY** setting defines definite time delay for element operation.

When the **PHASE OV1 CURVE** setting is set to Inverse Time, the **PHASE OV1 PICKUP DELAY** setting defines the inverse curve time delay multiplier (D) that is used in the Voltage Elements > Overvoltage Inverse Time Curves section.

When the **PHASE OV1 CURVE** setting is set to one of the FlexCurves, the **PHASE OV1 PICKUP DELAY** setting defines the FlexCurve time delay multiplier (D) that is used in the following curve equation:

$$T = D \times \text{FlexCurve time at } (V/V_{pkp}) \qquad \textbf{Eq. 5-23}$$

For FlexCurves configuration instructions, see the System Setup > FlexCurves section.

PHASE OV1 RESET DELAY — When the Curve setting is set to Definite Time or Inverse Time, the element resets when applied voltage goes below the dropout voltage for the duration of the selected RESET DELAY setting.

When the Curve setting is set to one of the FlexCurves, the element reset is based on the equation and not the **PHASE OV1 RESET DELAY** setting.

As shown in the equation, the multiple of pickup value that defines the point on the FlexCurve characteristic is derived from the ratio of the measured voltage to the set pickup. For example, if Pickup is set to 1.1 pu when the measured voltage is 1.3 pu, the ratio is 1.3/1.1 = 1.2. Therefore, in FlexCurve, the corresponding operate time is at 1.2 x PKP (not at 1.3 x PKP). On the other hand, when measured voltage is 1 pu, the ratio is 1/1.1 = 0.9. Therefore, in FlexCurve, the corresponding reset time is at 0.9 x PKP.

Figure 5-152: Phase overvoltage logic

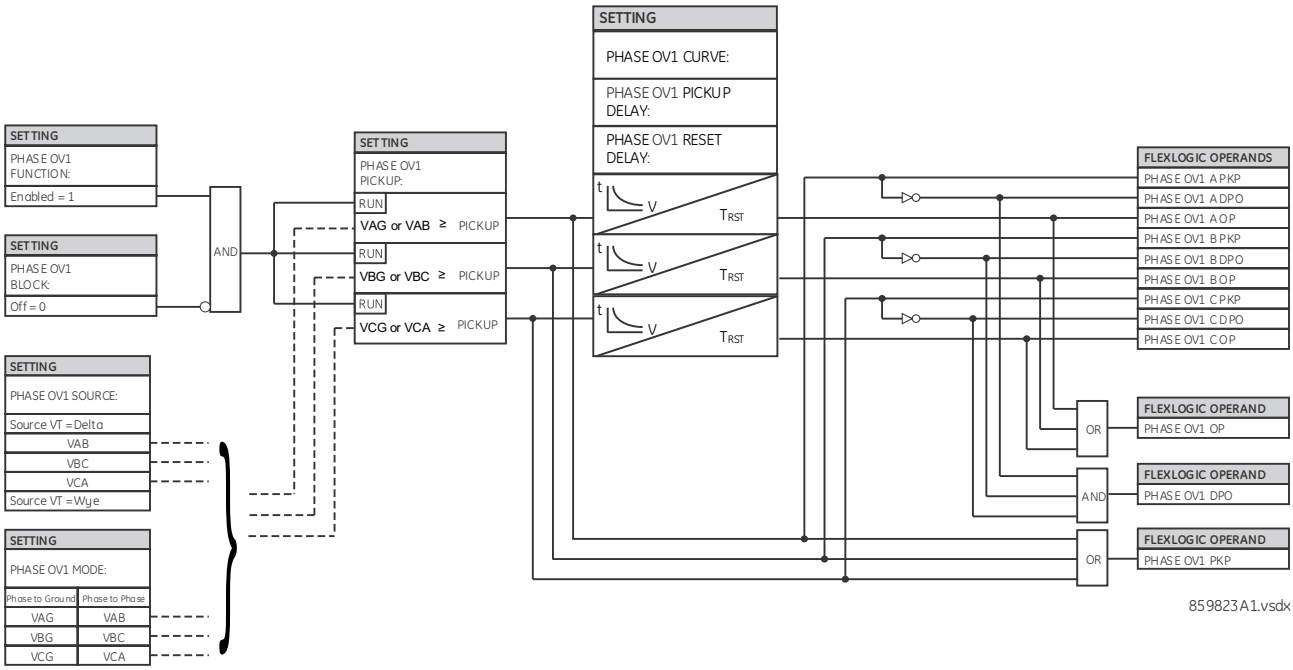

5.8.8 Supervising elements

5.8.8.1 Open pole detector

SETTINGS ⇨⇩ GROUPED ELEMENTS ⇨ SETTING GROUP 1(6) ⇨⇩ SUPERVISING ELEMENTS ⇨ OPEN POLE DETECTOR

■ OPEN POLE DETECTOR ■	⇔	OPEN POLE FUNCTION: Disabled	Range: Disabled, Enabled
	⇩	OPEN POLE BLOCK: Off	Range: FlexLogic operand
	⇩	OPEN POLE CURRENT SOURCE: SRC 1	Range: SRC 1, SRC 2, SRC 3, SRC 4, SRC 5, SRC 6
	⇩	OPEN POLE CURRENT PKP: 0.20 pu	Range: 0.05 to 20.00 pu in steps of 0.01
	⇩	OPEN POLE BROKEN CONDUCTOR: Disabled	Range: Disabled, Enabled
	⇩	OPEN POLE VOLTAGE INPUT: Disabled	Range: Disabled, Enabled
	⇩	OPEN POLE VOLTAGE SOURCE: SRC 1	Range: SRC 1, SRC 2, SRC 3, SRC 4, SRC 5, SRC 6
	⇩	OPEN POLE ϕA AUX CO: Off	Range: FlexLogic operand
	⇩	OPEN POLE ϕB AUX CO: Off	Range: FlexLogic operand
	⇩	OPEN POLE ϕC AUX CO: Off	Range: FlexLogic operand
	⇩	OPEN POLE PICKUP DELAY: 0.060 s	Range: 0.000 to 65.535 s in steps of 0.001
	⇩	OPEN POLE RESET DELAY: 0.100 s	Range: 0.000 to 65.535 s in steps of 0.001
	⇩	OPEN POLE TARGET: Self-reset	Range: Self-reset, Latched, Disabled
	⇧	OPEN POLE EVENTS: Disabled	Range: Disabled, Enabled

The open pole detector detects if any pole of the associated circuit breaker is opened or the conductor is broken on the protected power line and cable. The output FlexLogic operands can be used in three-pole and single-pole tripping schemes, in reclosing schemes, in blocking some elements (like CT failure), and in signaling or indication schemes. In single-pole tripping schemes, if OPEN POLE flag is set, any other subsequent fault causes a three-phase trip regardless of fault type.

The open pole detector logic detects absence of current in one phase during presence of current in other phases. Phases A, B, and C breaker auxiliary contacts (if available) are used in addition to make a logic decision for single-pole tripping applications. If voltage input is available, a low voltage function is used to detect absence of the monitoring voltage in the associated pole of the breaker.

OPEN POLE FUNCTION — Used to enable/disable operation of the element.

OPEN POLE BLOCK — Selects a FlexLogic operand that blocks operation of the element.

OPEN POLE CURRENT SOURCE — Selects the source for the current for the element.

OPEN POLE CURRENT PICKUP — Selects the pickup value of the phase current. The pickup setting is the minimum of the range and likely to be somewhat above of the charging current of the line.

OPEN POLE BROKEN CONDUCTOR — Enables and disables detection of broken conductor or remote pole open conditions.

OPEN POLE VOLTAGE INPUT — Enables and disables the voltage input in making a logical decision. If the line VT (not bus VT) is available, the voltage input can be set to "Enable."

OPEN POLE VOLTAGE SOURCE — Selects the voltage source for the element.

OPEN POLE ϕA(C) AUX CONTACT — These three settings are used to select a FlexLogic operand reflecting the state of the 52b type phase A circuit breaker auxiliary contact (closed when main breaker contact is open) for single-pole tripping applications. If two breakers per line are used, then both breaker auxiliary contacts feeding into the AND gate (representing auxiliary contacts connected in series) are to be assigned.

OPEN POLE PICKUP DELAY — Selects the pickup delay of the element.

OPEN POLE RESET DELAY — This setting is used to select the reset delay of the element. The use of this setting depends on the particular application and whether single-pole or three-pole tripping is used. It comprises the reset time of the operating elements it used in conjunction with, the breaker opening time, and breaker auxiliary contacts discrepancy with the main contacts.

Figure 5-153: Open pole detector logic

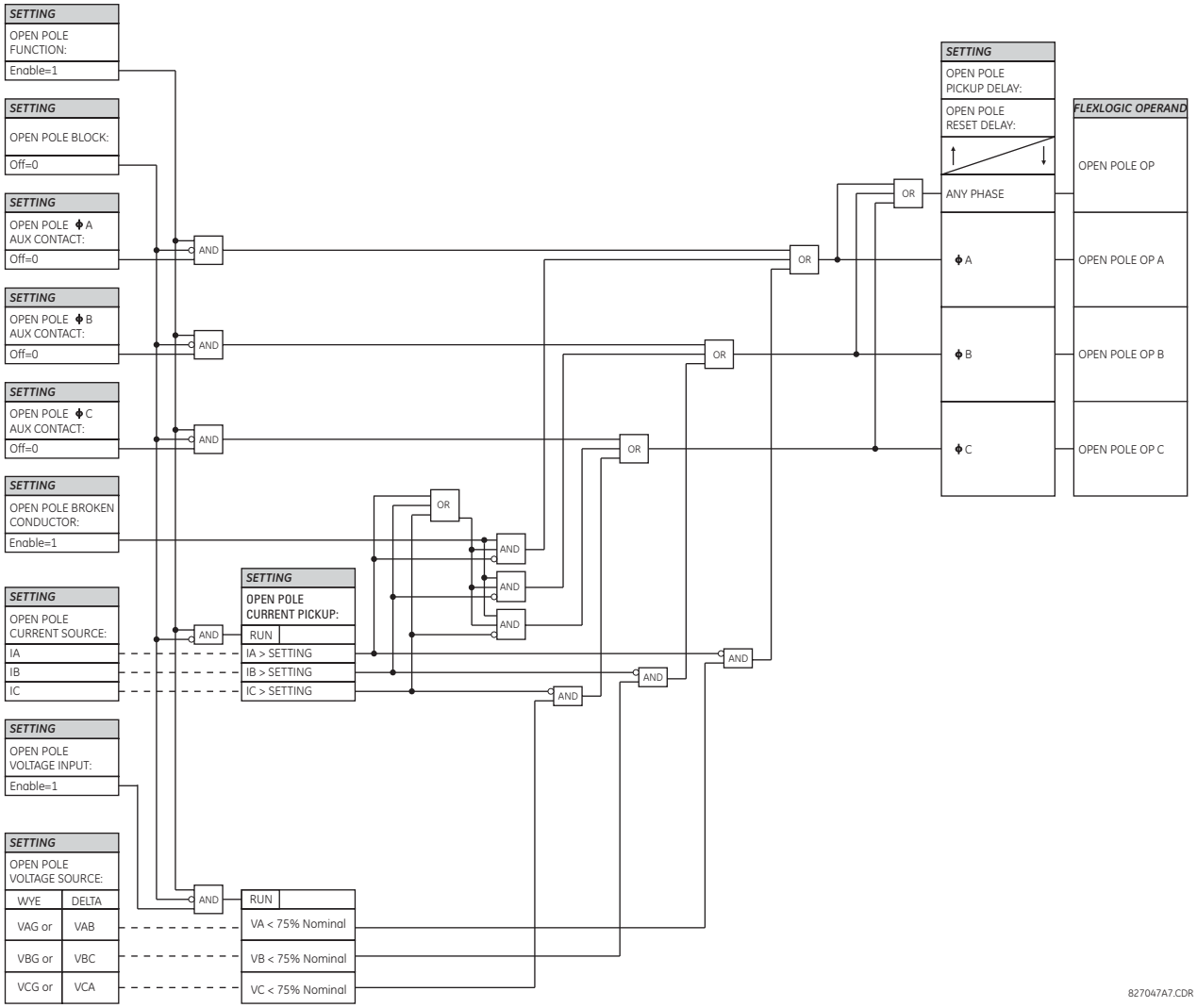

5.8.9 Sensitive directional power (ANSI 32)

SETTINGS ⇨⇩ GROUPED ELEMENTS ⇨ SETTING GROUP 1(6) ⇨⇩ POWER ⇨ SENSITIVE DIRECTIONAL POWER ⇨ DIRECTIONAL POWER 1(2)

■ DIRECTIONAL ■ POWER 1	⇔	**DIR POWER 1 FUNCTION: Disabled**	Range: Disabled, Enabled
	⇩	**DIR POWER 1 SOURCE: SRC 1**	Range: SRC 1, SRC 2, SRC 3, SRC 4, SRC 5, SRC 6
	⇩	**DIR POWER 1 RCA: 0°**	Range: 0 to 359° in steps of 1
	⇩	**DIR POWER 1 CALIBRATION: 0.00°**	Range: 0 to 0.95° in steps of 0.05
	⇩	**DIR POWER 1 STG1 SMIN: 0.100 pu**	Range: –3.300 to 3.300 pu in steps of 0.001
	⇩	**DIR POWER 1 STG1 DELAY: 0.50 s**	Range: 0.00 to 600.00 s in steps of 0.01
	⇩	**DIR POWER 1 STG2 SMIN: 0.100 pu**	Range: –3.300 to 3.300 pu in steps of 0.001
	⇩	**DIR POWER 1 STG2 DELAY: 20.00 s**	Range: 0.00 to 600.00 s in steps of 0.01
	⇩	**DIR POWER 1 BLK: Off**	Range: FlexLogic operand
	⇩	**DIR POWER 1 TARGET: Self-reset**	Range: Self-reset, Latched, Disabled
	⇧	**DIR POWER 1 EVENTS: Disabled**	Range: Disabled, Enabled

The sensitive directional power element responds to three-phase directional power and is designed for reverse power and low forward power applications for synchronous machines or interconnections involving co-generation. The relay measures the three-phase power from either a full set of wye-connected VTs or a full set of delta-connected VTs. In the latter case, the two-wattmeter method is used. See the UR-series Metering Conventions section in chapter 6 for details regarding the active and reactive powers used by the sensitive directional power element.

The element has an adjustable characteristic angle and minimum operating power as shown in the Directional Power Characteristic diagram that follows. The element responds to the following condition:

$$P \cos \theta + Q \sin \theta > SMIN \qquad \textbf{Eq. 5-24}$$

where

P and Q are active and reactive powers as measured per the UR metering convention
θ is a sum of the element characteristic (**DIR POWER 1 RCA**) and calibration (**DIR POWER 1 CALIBRATION**) angles
SMIN is the minimum operating power

The operating quantity is displayed in the **ACTUAL VALUES ⇨ METERING ⇨⇩ SENSITIVE DIRECTIONAL POWER 1(2)** actual value. The element has two independent (as to the pickup and delay settings) stages for alarm and trip, respectively.

Figure 5-154: Directional power characteristic

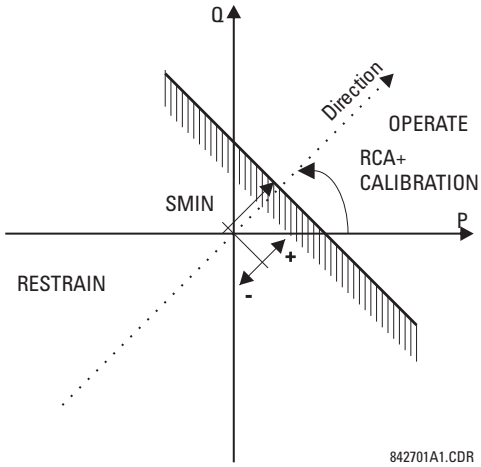

By making the characteristic angle adjustable and providing for both negative and positive values of the minimum operating power, a variety of operating characteristics can be achieved as presented in the following figure. For example, section (a) in the figure shows settings for reverse power, while section (b) shows settings for low forward power applications.

Figure 5-155: Directional power element sample applications

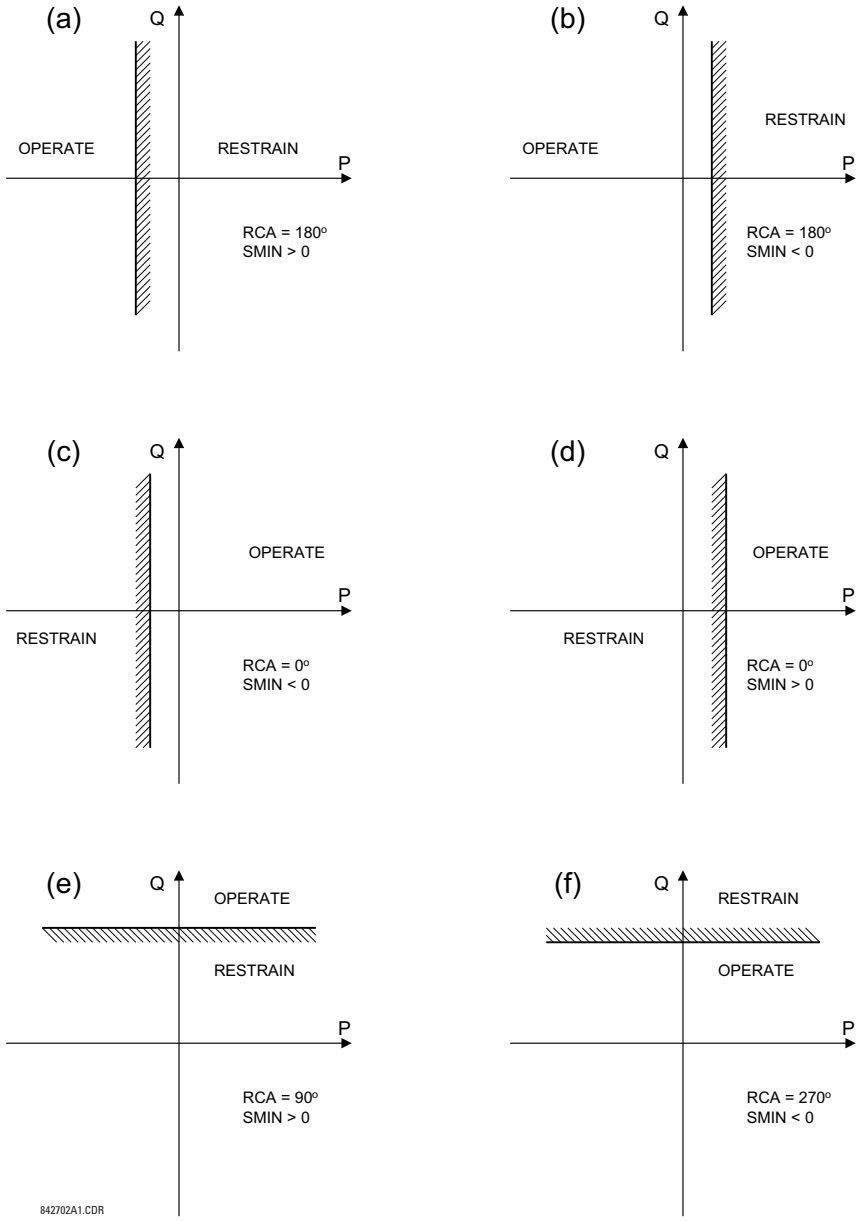

DIR POWER 1 RCA — Specifies the relay characteristic angle (RCA) for the sensitive directional power function. Application of this setting is threefold:

- It allows the element to respond to active or reactive power in any direction (active overpower/underpower, and so on)
- Together with a precise calibration angle, it allows compensation for any CT and VT angular errors to permit more sensitive settings
- It allows for required direction in situations when the voltage signal is taken from behind a delta-wye connected power transformer and the phase angle compensation is required

For example, the active overpower characteristic is achieved by setting **DIR POWER 1 RCA** to "0°," reactive overpower by setting **DIR POWER 1 RCA** to "90°," active underpower by setting **DIR POWER 1 RCA** to "180°," and reactive underpower by setting **DIR POWER 1 RCA** to "270°."

DIR POWER 1 CALIBRATION — This setting allows the relay characteristic angle to change in steps of 0.05°. This is useful when a small difference in VT and CT angular errors is to be compensated to permit more sensitive settings. This setting virtually enables calibration of the directional power function in terms of the angular error of applied VTs and CTs. The element responds to the sum of the **DIR POWER 1 RCA** and **DIR POWER 1 CALIBRATION** settings.

DIR POWER 1 STG1 SMIN — This setting specifies the minimum power as defined along the relay characteristic angle (RCA) for the stage 1 of the element. The positive values imply a shift towards the operate region along the RCA line; the negative values imply a shift towards the restrain region along the RCA line. See the Directional Power Sample Applications figure for details. Together with the RCA, this setting enables a wide range of operating characteristics. This setting applies to three-phase power and is entered in per-unit (pu) values. The base quantity is 3 x VT pu base x CT pu base for wye connected VTs, and $\sqrt{3}$ x VT pu base x CT pu base for delta connected VTs.

For example, a setting of 2% for a 200 MW machine is 0.02 × 200 MW = 4 MW. If 13.8kV is line voltage and 10 kA is a primary CT current, the source pu quantity is 239 MVA, and thus, SMIN needs to be set at 4 MW / 239 MVA = 0.0167 pu ≈ 0.017 pu. If the reverse power application is considered, RCA = 180° and SMIN = 0.017 pu.

The element drops out if the magnitude of the positive-sequence current becomes virtually zero, that is, it drops below the cutoff level.

DIR POWER 1 STG1 DELAY — This setting specifies a time delay for stage 1. For reverse power or low forward power applications for a synchronous machine, stage 1 is typically applied for alarming and stage 2 for tripping.

Figure 5-156: Sensitive directional power logic

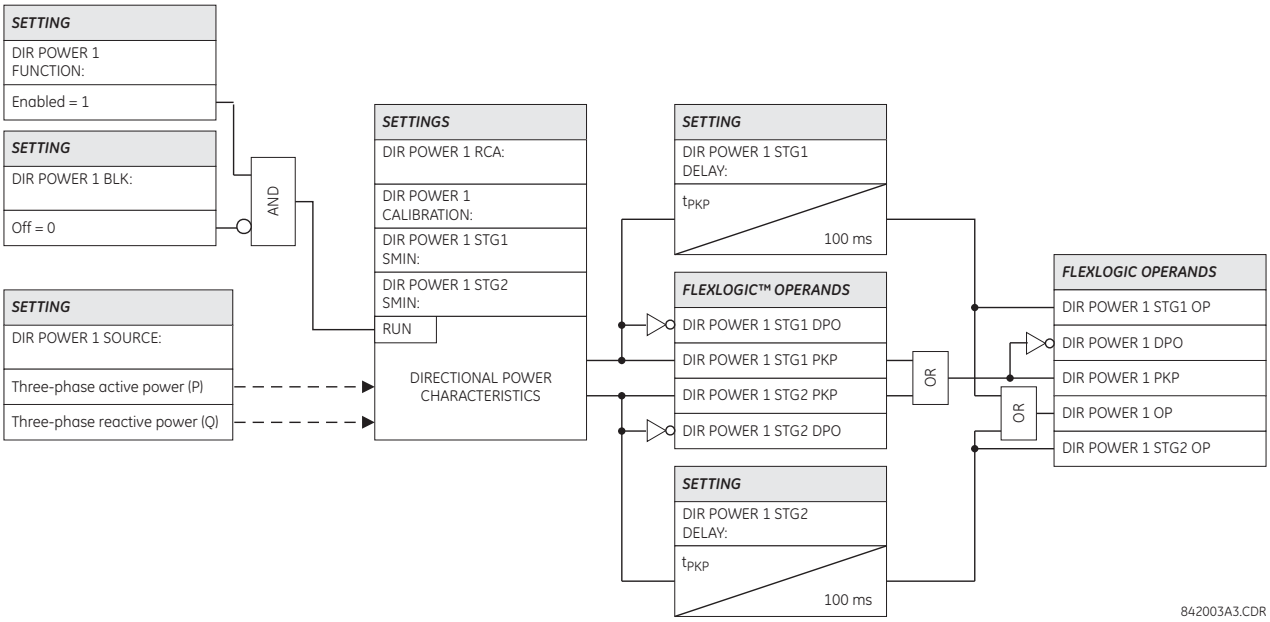

5.9 Control elements

5.9.1 Overview

Control elements are used for control rather than protection. See the Introduction to Elements section at the beginning of this chapter for information.

5.9.2 Trip bus

SETTINGS ⇨⇩ CONTROL ELEMENTS ⇨ TRIP BUS ⇨ TRIP BUS 1(6)

■ TRIP BUS 1 ■	⇔	TRIP BUS 1 FUNCTION: Disabled	Range: Enabled, Disabled
	⇩	TRIP BUS 1 BLOCK: Off	Range: FlexLogic operand
	⇩	TRIP BUS 1 PICKUP DELAY: 0.00 s	Range: 0.00 to 600.00 s in steps of 0.01
	⇩	TRIP BUS 1 RESET DELAY: 0.00 s	Range: 0.00 to 600.00 s in steps of 0.01
	⇩	TRIP BUS 1 INPUT 1: Off	Range: FlexLogic operand
		⇩	
	⇩	TRIP BUS 1 INPUT 16: Off	Range: FlexLogic operand
	⇩	TRIP BUS 1 LATCHING: Disabled	Range: Enabled, Disabled
	⇩	TRIP BUS 1 RESET: Off	Range: FlexLogic operand
	⇩	TRIP BUS 1: TARGET: Self-reset	Range: Self-reset, Latched, Disabled
	⇧	TRIP BUS 1 EVENTS: Disabled	Range: Enabled, Disabled

The trip bus element allows aggregating outputs of protection and control elements without using FlexLogic and assigning them a simple and effective manner. Each trip bus can be assigned for either trip or alarm actions. Simple trip conditioning such as latch, delay, and seal-in delay are available.

The easiest way to assign element outputs to a trip bus is through the EnerVista software under **Settings > Protection Summary**. Navigate to a specific protection or control protection element and check the bus box by hovering over the blank check box and selecting an option that displays. Once the required element is selected for a specific bus, a list of element operate-type operands are displayed and can be assigned to a trip bus. If more than one operate-type operand is required, it can be assigned directly from the trip bus menu.

Figure 5-157: Trip bus fields in the protection summary

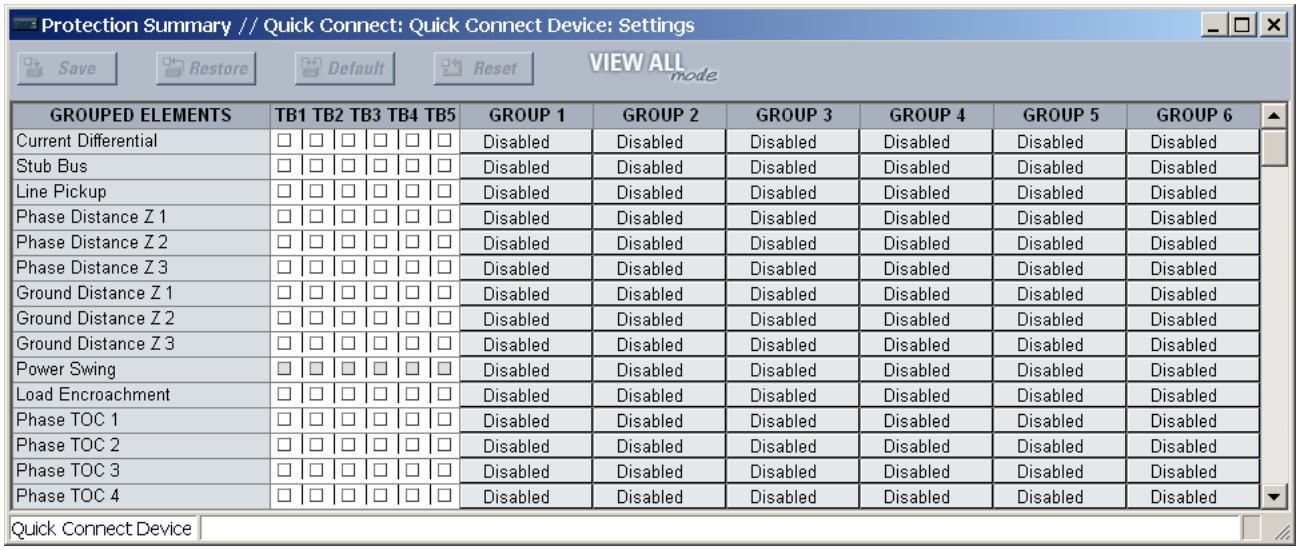

GROUPED ELEMENTS	TB1	TB2	TB3	TB4	TB5	GROUP 1	GROUP 2	GROUP 3	GROUP 4	GROUP 5	GROUP 6
Current Differential	☐	☐	☐	☐	☐	Disabled	Disabled	Disabled	Disabled	Disabled	Disabled
Stub Bus	☐	☐	☐	☐	☐	Disabled	Disabled	Disabled	Disabled	Disabled	Disabled
Line Pickup	☐	☐	☐	☐	☐	Disabled	Disabled	Disabled	Disabled	Disabled	Disabled
Phase Distance Z 1	☐	☐	☐	☐	☐	Disabled	Disabled	Disabled	Disabled	Disabled	Disabled
Phase Distance Z 2	☐	☐	☐	☐	☐	Disabled	Disabled	Disabled	Disabled	Disabled	Disabled
Phase Distance Z 3	☐	☐	☐	☐	☐	Disabled	Disabled	Disabled	Disabled	Disabled	Disabled
Ground Distance Z 1	☐	☐	☐	☐	☐	Disabled	Disabled	Disabled	Disabled	Disabled	Disabled
Ground Distance Z 2	☐	☐	☐	☐	☐	Disabled	Disabled	Disabled	Disabled	Disabled	Disabled
Ground Distance Z 3	☐	☐	☐	☐	☐	Disabled	Disabled	Disabled	Disabled	Disabled	Disabled
Power Swing	☐	☐	☐	☐	☐	Disabled	Disabled	Disabled	Disabled	Disabled	Disabled
Load Encroachment	☐	☐	☐	☐	☐	Disabled	Disabled	Disabled	Disabled	Disabled	Disabled
Phase TOC 1	☐	☐	☐	☐	☐	Disabled	Disabled	Disabled	Disabled	Disabled	Disabled
Phase TOC 2	☐	☐	☐	☐	☐	Disabled	Disabled	Disabled	Disabled	Disabled	Disabled
Phase TOC 3	☐	☐	☐	☐	☐	Disabled	Disabled	Disabled	Disabled	Disabled	Disabled
Phase TOC 4	☐	☐	☐	☐	☐	Disabled	Disabled	Disabled	Disabled	Disabled	Disabled

The following settings are available.

TRIP BUS 1 BLOCK — The trip bus output is blocked when the operand assigned to this setting is asserted.

TRIP BUS 1 PICKUP DELAY — This setting specifies a time delay to produce an output depending on how output is used.

TRIP BUS 1 RESET DELAY — This setting specifies a time delay to reset an output command. Set the time delay long enough to allow the breaker or contactor to perform a required action.

TRIP BUS 1 INPUT 1 to **TRIP BUS 1 INPUT 16** — These settings select a FlexLogic operand to be assigned as an input to the trip bus.

TRIP BUS 1 LATCHING — This setting enables or disables latching of the trip bus output. This is typically used when lockout is required or user acknowledgement of the relay response is required.

TRIP BUS 1 RESET — The trip bus output is reset when the operand assigned to this setting is asserted. Note that the RESET OP operand is pre-wired to the reset gate of the latch, As such, a reset command from the front panel interface or via communications resets the trip bus output.

Figure 5-158: Trip bus logic

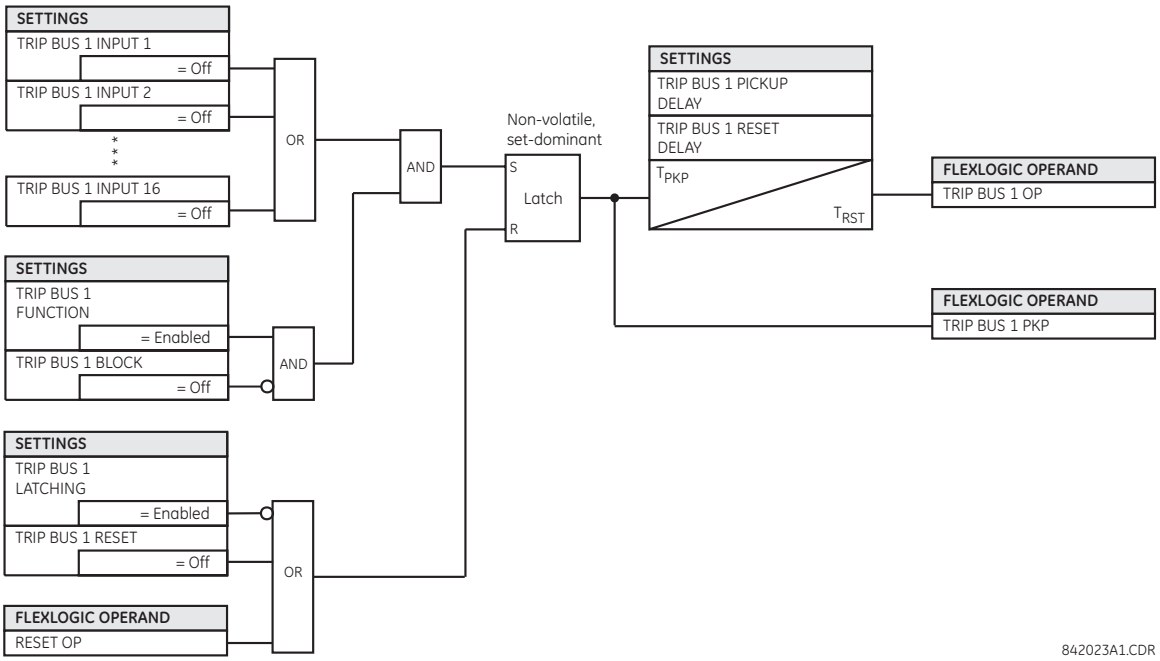

5

5.9.3 Setting groups

SETTINGS ⇨⇩ CONTROL ELEMENTS ⇨ SETTING GROUPS

■ SETTING GROUPS ■	⇔	SETTING GROUPS FUNCTION: Disabled	Range: Disabled, Enabled
	⇩	Control Mode: Local	Range: Local, IEC61850 Client
	⇩	SETTING GROUPS BLK: Off	Range: FlexLogic operand
	⇩	GROUP 2 ACTIVATE ON: Off	Range: FlexLogic operand
		⇩	
	⇩	GROUP 6 ACTIVATE ON: Off	Range: FlexLogic operand
	⇩	GROUP 1 NAME:	Range: up to 16 alphanumeric characters
		⇩	
	⇩	GROUP 6 NAME:	Range: up to 16 alphanumeric characters
	⇧	SETTING GROUP EVENTS: Disabled	Range: Disabled, Enabled

The setting groups menu controls the activation and deactivation of up to six groups of settings in the **GROUPED ELEMENTS** settings menu. The active setting group can be indicated on the front display of the N60 by configuring User-Programmable LEDs to display the state of the SETTING GROUP ACT FlexLogic operands.

On a setting group change, protection elements are blocked temporarily to allow the relay to re-initialize with the new settings. The duration of the block depends on relay configuration and can last up to four cycles. The actual block duration on the group switching can be verified by the PROTSUPV operand.

SETTING GROUPS FUNCTION — When Enabled, allows setting groups other than group 1 (the default active group) to be activated. When Disabled, the default setting group is forced active. When changed from Disabled to Enabled, it resets the active setting group to 1 independent of the **Control Mode** setting.

Control Mode — This setting displays when IEC 61850 is used by the N60. It selects the active setting group selection control mode. When set to "Local," active setting group selection is based on the FlexLogic operand states selected by **GROUP ACTIVATE ON** settings and the SelectActiveSG request from an IEC 61850 client generates a negative response. When set to "IEC61850 Client," the SelectActiveSG request from an IEC 61850 client selects the active setting group and the FlexLogic operand states of the **GROUP ACTIVATE ON** settings are ignored/not used.

The logic diagram shows the active setting group selection behavior based on the **Control Mode** setting.

When the **Control Mode** is "Local," the priority scheme makes active the highest numbered group selected by the **GROUP ACTIVATE ON** settings. The most recent active group selection is preserved while the N60 is powered down or reset.

When the **Control Mode** is "IEC61850 Client," the SelectActiveSG selection has an initial value that can be set on a CID file download by the IEC 61850 setting Initial Setting Group. See the **Settings > Product Setup > Communications > IEC 61850 protocol > Setting Groups** section earlier for details. The most recent SelectActiveSG selection is preserved while the N60 is powered down or reset. If it becomes necessary to cancel the SelectActiveSG selection without using a SelectActiveSG service request, change the **SETTING GROUPS FUNCTION** setting to Disabled. This resets the SelectActiveSG selection to 1.

When the **Control Mode** is changed, the current active setting group selection is preserved.

Figure 5-159: Logic diagram for Control Mode setting

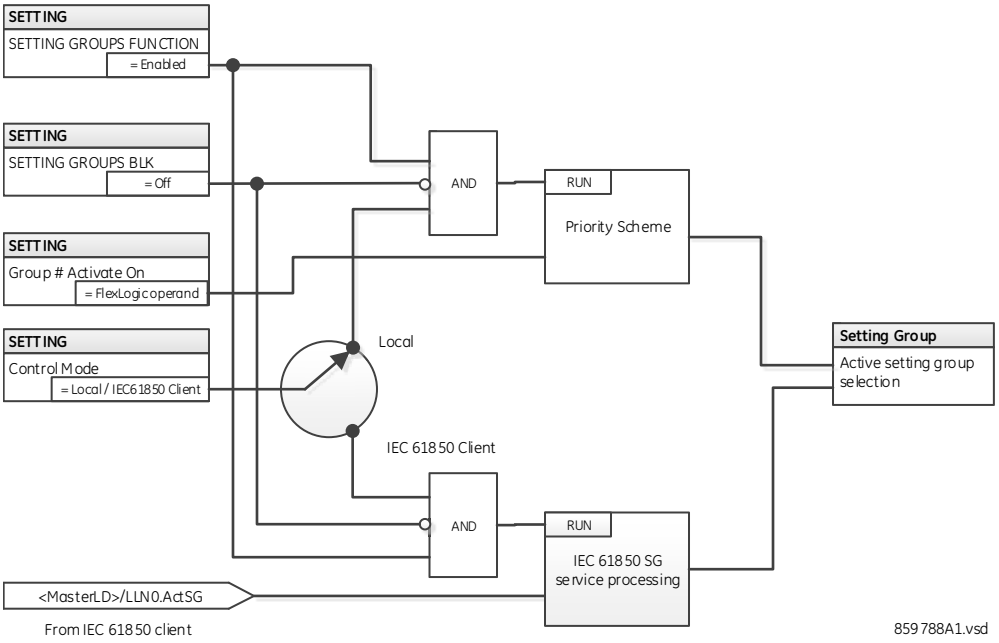

NOTE

Active setting group selection can be made either by IEC 61850 MMS SelectActiveSG service or Local by the FlexLogic operand states selected by **GROUP # ACTIVATE ON** settings. Simultaneous setting group control is not permissible.

SETTING GROUPS BLK — Prevents the active setting group from changing when the selected FlexLogic operand is "On." This can be useful in applications where it is undesirable to change the settings under certain conditions, such as during a control sequence.

GROUP 2 ACTIVATE ON to **GROUP 6 ACTIVATE ON** — Selects a FlexLogic operand which, when set, makes the particular setting group active for use by any grouped element. A priority scheme ensures that only one group is active at a given time — the highest-numbered group that is activated by its **ACTIVATE ON** parameter takes priority over the lower-numbered groups. There is no activate on setting for group 1 (the default active group), because group 1 automatically becomes active if no other group is active.

The settings are read-only with default values when the **Control Mode** setting is set to "IEC61850 Client."

A setting group selection can also be made by the IEC 61850 MMS service SelectActiveSG to the control block @Master/LLN0.SGCB. An active group selection can be done either by SelectActiveSG service from a IEC 61850 client or by **GROUP ACTIVATE ON** settings, but mixed operation is not allowed.

An initial setting group value is initialized to the **GROUP ACTIVATE ON** setting value on N60 reboot immediately following the receipt of a valid CID file.

SETTING GROUP 1 NAME to **SETTING GROUP 6 NAME** — Allows the user to assign a name to each of the six settings groups. Once programmed, this name appears on the second line of the **GROUPED ELEMENTS ⇨ SETTING GROUP 1(6)** menu display.

The relay can be set up via a FlexLogic equation to receive requests to activate or de-activate a particular non-default settings group. The following FlexLogic equation (see the following figure) illustrates requests via remote communications (for example, VIRTUAL INPUT 1 ON) or from a local contact input (for example, CONTACT IP 1 ON) to initiate the use of a particular settings group, and requests from several overcurrent pickup measuring elements to inhibit the use of the particular settings group. The assigned VIRTUAL OUTPUT 1 operand is used to control the "On" state of a particular settings group.

Figure 5-160: Example of FlexLogic control of a setting group

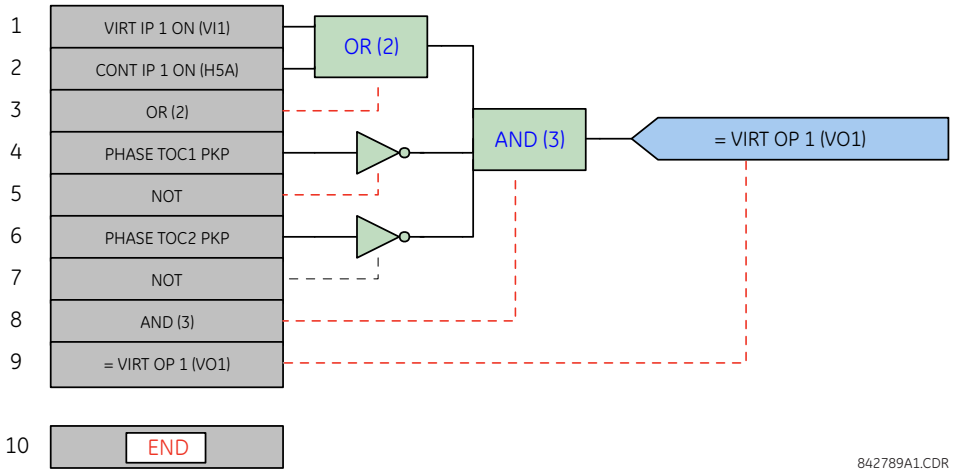

5.9.4 Selector switch

SETTINGS ⇨⇩ CONTROL ELEMENTS ⇨ SELECTOR SWITCH ⇨ SELECTOR SWITCH 1(2)

■ SELECTOR SWITCH 1 ■	⇔	SELECTOR 1 FUNCTION: Disabled	Range: Disabled, Enabled
	⇩	SELECTOR 1 FULL RANGE: 7	Range: 1 to 7 in steps of 1
	⇩	SELECTOR 1 TIME-OUT: 5.0 s	Range: 3.0 to 60.0 s in steps of 0.1
	⇩	SELECTOR 1 STEP-UP: Off	Range: FlexLogic operand
	⇩	SELECTOR 1 STEP-UP MODE: Time-out	Range: Time-out, Acknowledge
	⇩	SELECTOR 1 ACK: Off	Range: FlexLogic operand
	⇩	SELECTOR 1 3BIT A0: Off	Range: FlexLogic operand

⇕	**SELECTOR 1 3BIT A1: Off**	Range: FlexLogic operand
⇕	**SELECTOR 1 3BIT A2: Off**	Range: FlexLogic operand
⇕	**SELECTOR 1 3BIT MODE: Time-out**	Range: Time-out, Acknowledge
⇕	**SELECTOR 1 3BIT ACK: Off**	Range: FlexLogic operand
⇕	**SELECTOR 1 POWER-UP MODE: Restore**	Range: Restore, Synchronize, Sync/Restore
⇕	**SELECTOR 1 TARGETS: Self-reset**	Range: Self-reset, Latched, Disabled
⇧	**SELECTOR 1 EVENTS: Disabled**	Range: Disabled, Enabled

The selector switch element is intended to replace a mechanical selector switch. Typical applications include setting group control or control of multiple logic sub-circuits in user-programmable logic.

The element provides for two control inputs. The step-up control allows stepping through selector position one step at a time with each pulse of the control input, such as a user-programmable pushbutton. The three-bit control input allows setting the selector to the position defined by a three-bit word.

The element allows pre-selecting a new position without applying it. The pre-selected position gets applied either after time-out or upon acknowledgement via separate inputs (user setting). The selector position is stored in non-volatile memory. Upon power-up, either the previous position is restored or the relay synchronizes to the current three-bit word (user setting). Basic alarm functionality alerts the user under abnormal conditions; for example, the three-bit control input being out of range.

A selector switch runs every two power cycles.

SELECTOR 1 FULL RANGE — This setting defines the upper position of the selector. When stepping up through available positions of the selector, the upper position wraps up to the lower position (position 1). When using a direct three-bit control word for programming the selector to a desired position, the change would take place only if the control word is within the range of 1 to the **SELECTOR FULL RANGE**. If the control word is outside the range, an alarm is established by setting the SELECTOR ALARM FlexLogic operand for three seconds.

SELECTOR 1 TIME-OUT — This setting defines the time-out period for the selector. This value is used by the relay in the following two ways. When the **SELECTOR STEP-UP MODE** is "Time-out," the setting specifies the required period of inactivity of the control input after which the pre-selected position is automatically applied. When the **SELECTOR STEP-UP MODE** is "Acknowledge," the setting specifies the period of time for the acknowledging input to appear. The timer is re-started by any activity of the control input. The acknowledging input must come before the **SELECTOR 1 TIME-OUT** timer expires; otherwise, the change does not take place and an alarm is set.

SELECTOR 1 STEP-UP — This setting specifies a control input for the selector switch. The switch is shifted to a new position at each rising edge of this signal. The position changes incrementally, wrapping up from the last (**SELECTOR 1 FULL RANGE**) to the first (position 1). Consecutive pulses of this control operand must not occur faster than every 50 ms. After each rising edge of the assigned operand, the time-out timer is restarted and the SELECTOR SWITCH 1: POS Z CHNG INITIATED target message is displayed, where Z the pre-selected position. The message is displayed for the time specified by the **FLASH MESSAGE TIME** setting. The pre-selected position is applied after the selector times out ("Time-out" mode), or when the acknowledging signal appears before the element times out ("Acknowledge" mode). When the new position is applied, the relay displays the SELECTOR SWITCH 1: POSITION Z IN USE message. Typically, a user-programmable pushbutton is configured as the stepping up control input.

SELECTOR 1 STEP-UP MODE — This setting defines the selector mode of operation. When set to "Time-out," the selector changes its position after a pre-defined period of inactivity at the control input. The change is automatic and does not require any explicit confirmation of the intent to change the selector's position. When set to "Acknowledge," the selector changes its position only after the intent is confirmed through a separate acknowledging signal. If the acknowledging signal does not appear within a pre-defined period of time, the selector does not accept the change and an alarm is established by setting the SELECTOR STP ALARM output FlexLogic operand for three seconds.

SELECTOR 1 ACK — This setting specifies an acknowledging input for the stepping up control input. The pre-selected position is applied on the rising edge of the assigned operand. This setting is active only under "Acknowledge" mode of operation. The acknowledging signal must appear within the time defined by the **SELECTOR 1 TIME-OUT** setting after the last activity of the control input. A user-programmable pushbutton is typically configured as the acknowledging input.

SELECTOR 1 3BIT A0, **A1**, and **A2** — These settings specify a three-bit control input of the selector. The three-bit control word pre-selects the position using the following encoding convention:

A2	A1	A0	Position
0	0	0	rest
0	0	1	1
0	1	0	2
0	1	1	3
1	0	0	4
1	0	1	5
1	1	0	6
1	1	1	7

The "rest" position (0, 0, 0) does not generate an action and is intended for situations when the device generating the three-bit control word is having a problem. When **SELECTOR 1 3BIT MODE** is "Time-out," the pre-selected position is applied in **SELECTOR 1 TIME-OUT** seconds after the last activity of the three-bit input. When **SELECTOR 1 3BIT MODE** is "Acknowledge," the pre-selected position is applied on the rising edge of the **SELECTOR 1 3BIT ACK** acknowledging input.

The stepping up control input (**SELECTOR 1 STEP-UP**) and the three-bit control inputs (**SELECTOR 1 3BIT A0** through **A2**) lock-out mutually: once the stepping up sequence is initiated, the three-bit control input is inactive; once the three-bit control sequence is initiated, the stepping up input is inactive.

SELECTOR 1 3BIT MODE — This setting defines the selector mode of operation. When set to "Time-out," the selector changes its position after a pre-defined period of inactivity at the control input. The change is automatic and does not require explicit confirmation to change the selector position. When set to "Acknowledge," the selector changes its position only after confirmation via a separate acknowledging signal. If the acknowledging signal does not appear within a pre-defined period of time, the selector rejects the change and an alarm established by invoking the SELECTOR BIT ALARM FlexLogic operand for three seconds.

SELECTOR 1 3BIT ACK — This setting specifies an acknowledging input for the three-bit control input. The pre-selected position is applied on the rising edge of the assigned FlexLogic operand. This setting is active only under the "Acknowledge" mode of operation. The acknowledging signal must appear within the time defined by the **SELECTOR TIME-OUT** setting after the last activity of the three-bit control inputs. Note that the stepping up control input and three-bit control input have independent acknowledging signals (**SELECTOR 1 ACK** and **SELECTOR 1 3BIT ACK**, accordingly).

SELECTOR 1 POWER-UP MODE — This setting specifies the element behavior on power up of the relay.

When set to "Restore," the last position of the selector (stored in the non-volatile memory) is restored after powering up the relay. If the position restored from memory is out of range, position 0 (no output operand selected) is applied and an alarm is set (**SELECTOR 1 PWR ALARM**).

When set to "Synchronize," the selector switch acts as follows. For two power cycles, the selector applies position 0 to the switch and activates **SELECTOR 1 PWR ALARM**. After two power cycles expire, the selector synchronizes to the position dictated by the three-bit control input. This operation does not wait for time-out or the acknowledging input. When the synchronization attempt is unsuccessful (that is, the three-bit input is not available (0,0,0) or out of range), then the selector switch output is set to position 0 (no output operand selected) and an alarm is established (**SELECTOR 1 PWR ALARM**).

The operation of "Synch/Restore" mode is similar to the "Synchronize" mode. The only difference is that after an unsuccessful synchronization attempt, the switch attempts to restore the position stored in the relay memory. The "Synch/Restore" mode is useful for applications where the selector switch is employed to change the setting group in redundant (two relay) protection schemes.

SELECTOR 1 EVENTS — If enabled, the following events are logged:

Event name	Description
SELECTOR 1 POS Z	Selector 1 changed its position to Z
SELECTOR 1 STP ALARM	The selector position pre-selected via the stepping up control input has not been confirmed before the time out
SELECTOR 1 BIT ALARM	The selector position pre-selected via the three-bit control input has not been confirmed before the time out

The following figures illustrate the operation of the selector switch. In these diagrams, “T” represents a time-out setting.

Figure 5-161: Time-out mode

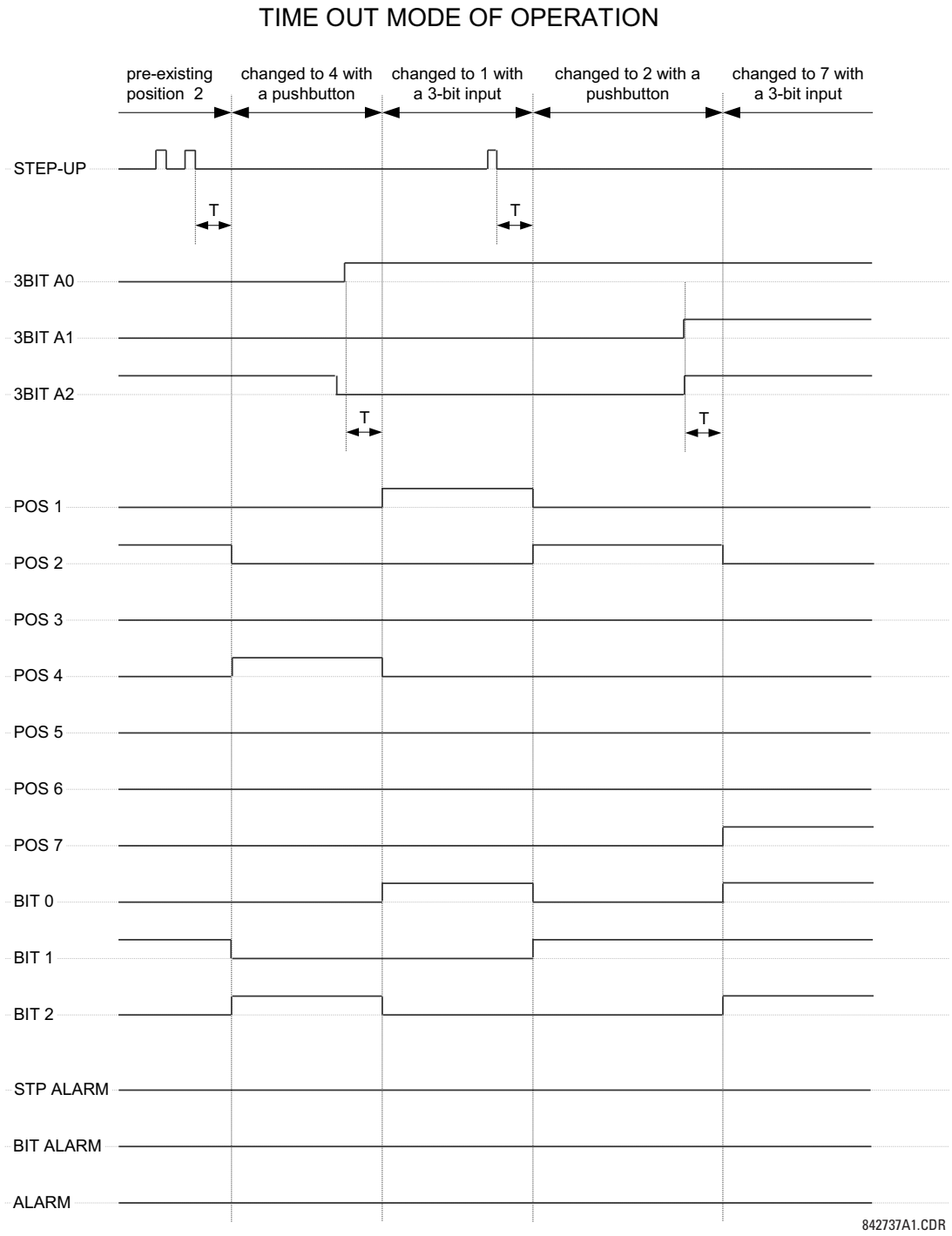

Figure 5-162: Acknowledge mode

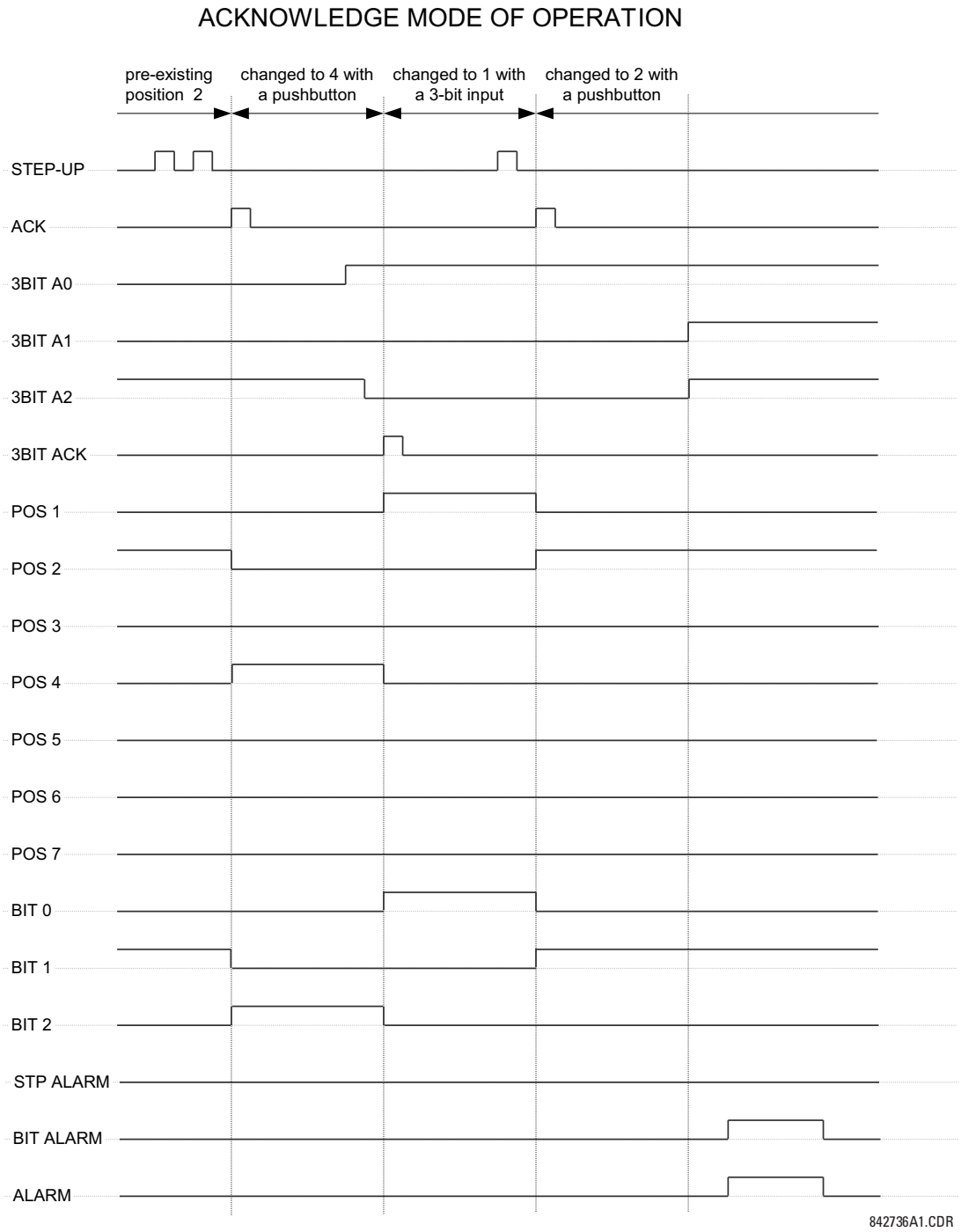

Application example

Consider an application where the selector switch is used to control setting groups 1 through 4 in the relay. The setting groups are to be controlled from both user-programmable pushbutton 1 and from an external device via contact inputs 1 through 3. The active setting group is to be available as an encoded three-bit word to the external device and SCADA via output contacts 1 through 3. The pre-selected setting group is to be applied automatically after five seconds of inactivity of the control inputs. When the relay powers up, it is to synchronize the setting group to the three-bit control input.

Make the following changes to setting group control in the **SETTINGS ⇨⇩ CONTROL ELEMENTS ⇨ SETTING GROUPS** menu:

FUNCTION: “Enabled”
Block: “Off”
GROUP 2 ACTIVATE ON: “SELECTOR 1 POS 2"
GROUP 3 ACTIVATE ON: “SELECTOR 1 POS 3"
GROUP 4 ACTIVATE ON: “SELECTOR 1 POS 4"
GROUP 5 ACTIVATE ON: “Off”
GROUP 6 ACTIVATE ON: “Off”

Make the following changes to selector switch element in the **SETTINGS ⇨⇩ CONTROL ELEMENTS ⇨⇩ SELECTOR SWITCH ⇨ SELECTOR SWITCH 1** menu to assign control to user programmable pushbutton 1 and contact inputs 1 through 3:

SELECTOR 1 FUNCTION: “Enabled”
SELECTOR 1 FULL-RANGE: “4”
SELECTOR 1 STEP-UP MODE: “Time-out”
SELECTOR 1 TIME-OUT: “5.0 s”
SELECTOR 1 STEP-UP: “PUSHBUTTON 1 ON”
SELECTOR 1 ACK: “Off”
SELECTOR 1 3BIT A0: “CONT IP 1 ON”
SELECTOR 1 3BIT A1: “CONT IP 2 ON”
SELECTOR 1 3BIT A2: “CONT IP 3 ON”
SELECTOR 1 3BIT MODE: “Time-out”
SELECTOR 1 3BIT ACK: “Off”
SELECTOR 1 POWER-UP MODE: “Synchronize”

Now, assign the contact output operation (assume the H6E module) to the selector switch element by making the following changes in the **SETTINGS ⇨⇩ INPUTS/OUTPUTS ⇨⇩ CONTACT OUTPUTS** menu:

OUTPUT H1 OPERATE: “SELECTOR 1 BIT 0"
OUTPUT H2 OPERATE: “SELECTOR 1 BIT 1"
OUTPUT H3 OPERATE: “SELECTOR 1 BIT 2"

Finally, assign configure user-programmable pushbutton 1 by making the following changes in the **SETTINGS ⇨ PRODUCT SETUP ⇨⇩ USER-PROGRAMMABLE PUSHBUTTONS ⇨ USER PUSHBUTTON 1** menu:

PUSHBUTTON 1 FUNCTION: “Self-reset”
PUSHBUTTON 1 DROP-OUT TIME: “0.10 s”

The figure shows the logic for the selector switch.

Figure 5-163: Selector switch logic

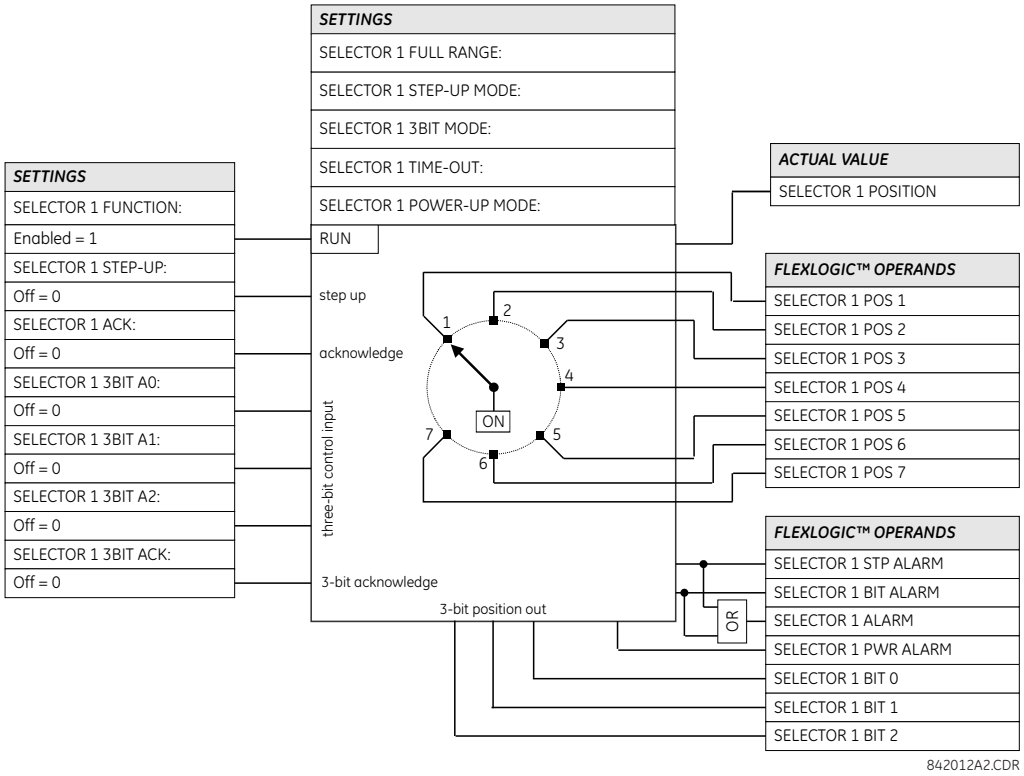

5.9.5 Underfrequency (ANSI 81U)

SETTINGS ⇨⇩ CONTROL ELEMENTS ⇨⇩ UNDERFREQUENCY ⇨⇩ UNDERFREQUENCY 1(6)

■ **UNDERFREQUENCY 1** ■	⇔	**UNDFREQ 1 FUNCTION: Disabled**	Range: Disabled, Enabled
	⇩	**UNDERFREQ 1 BLOCK: Off**	Range: FlexLogic operand
	⇩	**UNDERFREQ 1 SOURCE: SRC 1**	Range: SRC 1, SRC 2, SRC 3, SRC 4, SRC 5, SRC 6
	⇩	**UNDERFREQ 1 MIN VOLT/AMP: 0.10 pu**	Range: 0.10 to 1.25 pu in steps of 0.01
	⇩	**UNDERFREQ 1 PICKUP: 59.50 Hz**	Range: 20.00 to 65.00 Hz in steps of 0.01
	⇩	**UNDERFREQ 1 PICKUP DELAY: 2.000 s**	Range: 0.000 to 65.535 s in steps of 0.001
	⇩	**UNDERFREQ 1 RESET DELAY: 2.000 s**	Range: 0.000 to 65.535 s in steps of 0.001
	⇩	**UNDERFREQ 1 TARGET: Self-reset**	Range: Self-reset, Latched, Disabled
	⇩	**UNDERFREQ 1 EVENTS: Disabled**	Range: Disabled, Enabled

The steady-state frequency of a power system is a certain indicator of the existing balance between the generated power and the load. Whenever this balance is disrupted through the loss of an important generating unit or the isolation of part of the system from the rest of the system, the effect is a reduction in frequency. If the control systems of the system

generators do not respond fast enough, the system can collapse. A reliable method to quickly restore the balance between load and generation is to automatically disconnect selected loads, based on the actual system frequency. This technique, called "load-shedding," maintains system integrity and minimize widespread outages. After the frequency returns to normal, the load can be restored automatically or manually.

UNDERFREQ 1 SOURCE — This setting is used to select the source for the signal to be measured. The element first checks for a live phase voltage available from the selected source. If voltage is not available, the element attempts to use a phase current. If neither voltage nor current is available, the element does not operate, as it does not measure a parameter below the minimum voltage/current setting.

UNDERFREQ 1 MIN VOLT/AMP — Selects the minimum per unit voltage or current level required to allow the underfrequency element to operate. This threshold is used to prevent an incorrect operation because there is no signal to measure.

UNDERFREQ 1 PICKUP — Selects the level at which the underfrequency element is to pickup. For example, if the system frequency is 60 Hz and the load shedding is required at 59.5 Hz, the setting is 59.50 Hz.

Figure 5-164: Underfrequency logic

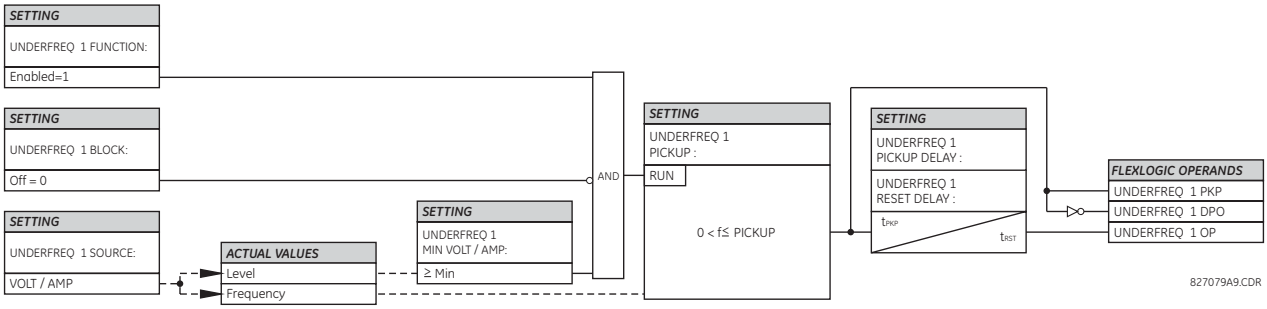

5.9.6 Overfrequency (ANSI 81O)

SETTINGS ⇨⇩ CONTROL ELEMENTS ⇨⇩ OVERFREQUENCY ⇨⇩ OVERFREQUENCY 1(4)

■ **OVERFREQUENCY 1** ■	⇔	**OVERFREQ 1 FUNCTION: Disabled**	Range: Disabled, Enabled
	⇩	**OVERFREQ 1 BLOCK: Off**	Range: FlexLogic operand
	⇩	**OVERFREQ 1 SOURCE: SRC 1**	Range: SRC 1, SRC 2, SRC 3, SRC 4, SRC 5, SRC 6
	⇩	**OVERFREQ 1 PICKUP: 60.50 Hz**	Range: 20.00 to 65.00 Hz in steps of 0.01
	⇩	**OVERFREQ 1 PICKUP DELAY: 0.500 s**	Range: 0.000 to 65.535 s in steps of 0.001
	⇩	**OVERFREQ 1 RESET DELAY : 0.500 s**	Range: 0.000 to 65.535 s in steps of 0.001
	⇩	**OVERFREQ 1 TARGET: Self-reset**	Range: Self-reset, Latched, Disabled
	⇧	**OVERFREQ 1 EVENTS: Disabled**	Range: Disabled, Enabled

There are four overfrequency elements, numbered 1 through 4.

A frequency calculation for a given source is made on the input of a voltage or current channel, depending on which is available. The channels are searched for the signal input in the following order: voltage channel A, auxiliary voltage channel, current channel A, and ground current channel. The first available signal is used for frequency calculation.

The steady-state frequency of a power system is an indicator of the existing balance between the generated power and the load. Whenever this balance is disrupted through the disconnection of significant load or the isolation of a part of the system that has a surplus of generation, the effect is an increase in frequency. If the control systems of the generators do not respond fast enough, to quickly ramp the turbine speed back to normal, the overspeed can lead to the turbine trip. The overfrequency element can be used to control the turbine frequency ramp down at a generating location. This element can also be used for feeder reclosing as part of the "after load shedding restoration."

The **OVERFREQ 1 SOURCE** setting selects the source for the signal to be measured.

The **OVERFREQ 1 PICKUP** setting selects the level at which the overfrequency element is to pickup.

Figure 5-165: Overfrequency logic

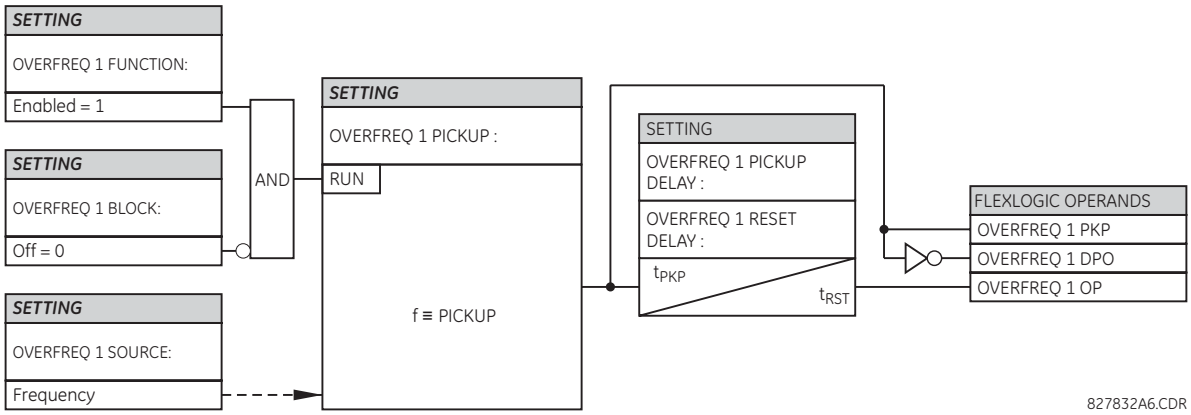

5.9.7 Synchrocheck (ANSI 25)

SETTINGS ⇨⇩ CONTROL ELEMENTS ⇨⇩ SYNCHROCHECK ⇨ SYNCHROCHECK 1(6)

■ SYNCHROCHECK 1 ■	⇔	**SYNCHK1 FUNCTION: Disabled**	Range: Disabled, Enabled
	⇕	**SYNCHK1 BLOCK: Off**	Range: FlexLogic operand
	⇕	**SYNCHK1 V1 SOURCE: SRC 1**	Range: SRC 1, SRC 2, SRC 3, SRC 4, SRC 5, SRC 6
	⇕	**SYNCHK1 V2 SOURCE: SRC 2**	Range: SRC 1, SRC 2, SRC 3, SRC 4, SRC 5, SRC 6
	⇕	**SYNCHK1 PHASE SELECT: Auto**	Range: Auto, Vag, Vbg, Vcg, Vab, Vbc, Vca
	⇕	**SYNCHK1 MAX VOLT DIFF: 10000 V**	Range: 0 to 400000 V in steps of 1
	⇕	**SYNCHK1 MAX ANGLE DIFF: 30**	Range: 0 to 100° in steps of 1
	⇕	**SYNCHK1 MAX FREQ DIFF: 0.100 Hz**	Range: 0.005 to 2.000 Hz in steps of 0.001
	⇕	**SYNCHK1 MAX FREQ HYSTERESIS: 0.060 Hz**	Range: 0.000 to 0.100 Hz in steps of 0.001
	⇕	**SYNCHK1 SYNC CLOSE: Off**	Range: FlexLogic operand
	⇕	**SYNCHK1 S-CLS MAX dF: 0.500 Hz**	Range: 0.100 to 10.000 Hz in steps of 0.001

⇕	**SYNCHK1 S-CLS MIN dF: 0.100 Hz**	Range: 0.005 to 1.000 Hz in steps of 0.001
⇕	**SYNCHK1 S-CLS ANG: 1**	Range: 0 to 100° in steps of 1
⇕	**SYNCHK1 S-CLS BRK TIME: 0.035 s**	Range: 0.010 to 0.500 s in steps of 0.001
⇕	**SYNCHK1 V2 MAG CORR FACTOR: 1.00**	Range: 0.10 to 10.00 in steps of 0.01
⇕	**SYNCHK1 V2 ANGLE SHIFT: 0**	Range: -180 to +180 degrees in steps of 1
⇕	**SYNCHK1 DEAD SOURCE SELECT: LV1 and DV2**	Range: None, LV1 and DV2, DV1 and LV2, DV1 or DV2, DV1 Xor DV2, DV1 and DV2
⇕	**SYNCHK1 DEAD V1 MAX VOLT: 0.30 pu**	Range: 0.04 to 1.25 pu in steps of 0.01
⇕	**SYNCHK1 DEAD V2 MAX VOLT: 0.30 pu**	Range: 0.04 to 1.25 pu in steps of 0.01
⇕	**SYNCHK1 LIVE V1 MIN VOLT: 0.70 pu**	Range: 0.04 to 1.25 pu in steps of 0.01
⇕	**SYNCHK1 LIVE V2 MIN VOLT: 0.70 pu**	Range: 0.04 to 1.25 pu in steps of 0.01
⇕	**SYNCHK1 TARGET: Self-reset**	Range: Self-reset, Latched, Disabled
⇧	**SYNCHK1 EVENTS: Disabled**	Range: Disabled, Enabled

5

The synchronism check function supervises the paralleling of two parts of a system that are to be joined by the closure of a circuit breaker. The synchrocheck elements are typically used at locations where the two parts of the system are interconnected through at least one other point in the system.

Synchrocheck verifies that the voltages (V1 and V2) on the two sides of the supervised circuit breaker are within set limits of magnitude, angle, and frequency differences. The time that the two voltages remain within the admissible angle difference is determined by the setting of the phase angle difference $\Delta\Phi$ and the frequency difference ΔF (slip frequency). It can be defined as the time it takes the voltage phasor V1 or V2 to traverse an angle equal to $2 \times \Delta\Phi$ at a frequency equal to the frequency difference ΔF. This time is calculated by:

$$T = \frac{1}{\frac{360°}{2 \times \Delta\Phi} \times \Delta F} \qquad \textbf{Eq. 5-25}$$

where

$\Delta\Phi$ is phase angle difference in degrees
ΔF is frequency difference in Hz

If one or both sources are de-energized, the synchrocheck programming can allow for closing of the circuit breaker using undervoltage control to bypass the synchrocheck measurements (dead source function).

SYNCHK1 V1 SOURCE — This setting selects the source for voltage V1 (see the Notes section that follows).

SYNCHK1 V2 SOURCE — Selects the source for voltage V2. V1 and V2 can have different sources or they can be the same (see the table in the next section).
If V1 and V2 are assigned to “SRC 1", for example, then in **Settings > System Setup > Power System**, the below settings should have the following values:

- **FREQUENCY AND PHASE REFERENCE**: “SRC 1"
- **ALTERNATE FREQ AND PHS REFERENCE**: “SRC 1"
- **SIGNAL TO TRACK**: “Auto” or “3PH_VT”

- **ALT SIGNAL TO TRACK**: "1PH_VT"

Also, in **Settings > System Setup > Signal Sources**, both **PHASE VT** and **AUX VT** should be configured.

If the above settings are not configured as suggested, the following target message will appear: SYNCHK 1: CHECK SETTINGS. This message self-resets when the element is either disabled or configured as above.

SYNCHK1 PHASE SELECT — This setting selects the source voltage (see the table in the next section) used by the synchrocheck element and is applicable when

- Both V1 and V2 assigned signal sources differ, and
- Both V1 and V2 assigned signal sources both have three-phase VT banks configured

SYNCHK1 MAX VOLT DIFF — Selects the maximum primary voltage difference in volts between the two sources. A primary voltage magnitude difference between the two input voltages below this value is within the permissible limit for synchronism.

SYNCHK1 MAX ANGLE DIFF — Selects the maximum angular difference in degrees between the two sources. An angular difference between the two input voltage phasors below this value is within the permissible limit for synchronism.

SYNCHK1 MAX FREQ HYSTERESIS — This setting specifies the required hysteresis for frequency difference condition.

- **SYNCHK1 MAX FREQ DIFF** — The condition becomes satisfied when the frequency difference becomes lower than **SYNCHK1 MAX FREQ DIFF**. Once the condition is satisfied, the frequency difference must increase to more than the sum of **SYNCHK1 MAX FREQ DIFF** + **SYNCHK1 MAX FREQ HYSTERESIS** to drop out.
- **SYNCHK1 S-CLS MAX dF** — The condition becomes satisfied when the frequency difference becomes lower than **SYNCHK1 S-CLS MAX dF**. Once the condition is satisfied, the frequency difference must increase to more than the sum of **SYNCHK1 S-CLS MAX dF** + **SYNCHK1 MAX FREQ HYSTERESIS** to drop out.
- **SYNCHK1 S-CLS MIN dF** — The condition becomes satisfied when the frequency difference becomes higher than **SYNCHK1 S-CLS MIN dF**. Once the condition is satisfied, the frequency difference must decrease to less than **SYNCHK1 S-CLS MIN dF** - **SYNCHK1 MAX FREQ HYSTERESIS** to drop out.

SYNCHK1 SYNC CLOSE — Enables the dynamic mode of synchrocheck. When it is enabled, the location of where the present V2 vector will be arriving to synchronize (shown as V2' in the figures here) with breaker close time being taken into account will be predicted based on the measured slip frequency so that breaker close command can be issued in advance to ensure the synchronism at the time when the breaker is actually closed.

Figure 5-166: Synchrocheck plot for slip > 0 (slip = F2-F1)

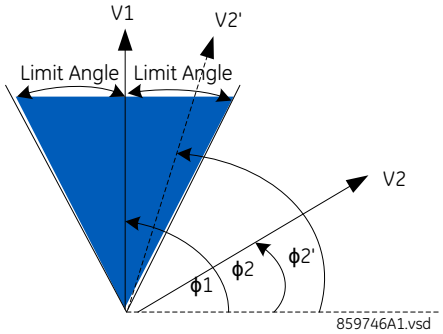

Figure 5-167: Synchrocheck plot for slip < 0 (slip = F2-F1)

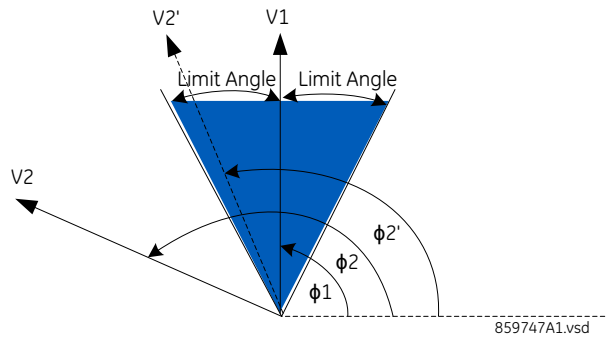

SYNCHK1 S-CLS MAX dF — Specifies the maximum slip frequency allowed in Hz in the dynamic mode. The dynamic mode is disarmed when the slip frequency exceeds this setting. Setting more than 2 Hz is not recommended as it is expected to have significant errors in phasor estimation, so apply them with caution.

SYNCHK1 S-CLS MIN dF — Specifies the minimum slip frequency allowed in Hz in the dynamic mode. The dynamic mode is disarmed when the slip frequency drops below this setting.

SYNCHK1 S-CLS ANG — This setting specifies the maximum angular difference in degrees between the two voltage phasors V1 and projected V2, that is, V2'.

SYNCHK1 S-CLS BRK TIME — Specifies the breaker closing time in seconds.

SYNCHK1 V2 MAG CORR FACTOR — Specifies the magnitude correction factor of source V2. This setting is used for V2 magnitude compensation so that V2 magnitude can be directly compared with V1 magnitude. For example, when V1 and V2 are taken from 2 different windings of the transformer and at different voltage levels, the magnitude compensation must be performed before starting magnitude comparison in synchrocheck element.

SYNCHK1 V2 ANGLE SHIFT — Specifies the angle of source V2 that needs to be shifted so that V2 angle can be directly compared with V1 angle. For example, when V1 and V2 are taken from two different windings of the transformer and with different angle shift due to winding connections, the angle shift compensation must be performed before starting angle comparison in synchrocheck element.

SYNCHK1 DEAD SOURCE SELECT — Selects the combination of dead and live sources that bypass the synchronism check function and permit the breaker to be closed when one or both of the two voltages (V1 or/and V2) are below the maximum voltage threshold. A dead or live source is declared by monitoring the voltage level. Six options are available:

None — Dead Source function is disabled
LV1 and DV2 — Live V1 and Dead V2
DV1 and LV2 — Dead V1 and Live V2
DV1 or DV2 — Dead V1 or Dead V2
DV1 Xor DV2 — Dead V1 exclusive-or Dead V2 (one source is Dead and the other is Live)
DV1 and DV2 — Dead V1 and Dead V2

SYNCHK1 DEAD V1 MAX VOLT — Establishes a maximum voltage magnitude for V1 in 1 'pu'. Below this magnitude, the V1 voltage input used for synchrocheck is considered "Dead" or de-energized.

SYNCHK1 DEAD V2 MAX VOLT — Establishes a maximum voltage magnitude for V2 in 'pu'. Below this magnitude, the V2 voltage input used for synchrocheck is considered "Dead" or de-energized.

SYNCHK1 LIVE V1 MIN VOLT — Establishes a minimum voltage magnitude for V1 in 'pu'. Above this magnitude, the V1 voltage input used for synchrocheck is considered "Live" or energized.

SYNCHK1 LIVE V2 MIN VOLT — This setting establishes a minimum voltage magnitude for V2 in 'pu'. Above this magnitude, the V2 voltage input used for synchrocheck is considered "Live" or energized.

5.9.7.1 Notes on the synchrocheck function

1. The selected sources for synchrocheck inputs V1 and V2 can include both a three-phase and an auxiliary voltage. The relay automatically selects the specific voltages to be used by the synchrocheck element in accordance with the

following tables.

Table 5-42: V1 and V2 assigned with different signal source

Number	V1 or V2 (source Y)	V1 or V2 (source Z)	Auto-selected combination		SYNCHK PHASE SELECT	Selected Voltage for comparison
			Source Y	Source Z		
1	3 Phase VT bank with or without Auxiliary VT	3 Phase VT bank with or without Auxiliary VT	3 Phase VT bank	3 Phase VT bank	Auto	Vab
2	3 Phase VT bank with or without Auxiliary VT	3 Phase VT bank with or without Auxiliary VT	3 Phase VT bank	3 Phase VT bank	Vag or Vbg or Vcg or Vab or Vbc or Vca	As set for **SYNCHK PHASE SELECT**
3	3 Phase VT bank with or without Auxiliary VT	Auxiliary VT	3 Phase VT bank	Auxiliary VT	Not applicable	V auxiliary (as set for Source Z)
4	Auxiliary VT	Auxiliary VT	Auxiliary VT	Auxiliary VT	Not applicable	V auxiliary (as set for selected sources)

The voltages V1 and V2 are matched automatically so that the corresponding voltages from the two sources are used to measure conditions. A phase to phase voltage is used if available in both sources; if one or both of the Sources have only an auxiliary voltage, this voltage is used. For example, if an auxiliary voltage is programmed to VAG, the synchrocheck element automatically selects VAG from the other source. If the comparison is required on a specific voltage, the user has the following two options:

- Select the preferred phase to ground or phase to phase voltage using the **SYNCHK PHASE SELECT** setting when both Source 1 and Source 2 have phase VTs
- Externally connect that specific voltage to auxiliary voltage terminals and then use this "Auxiliary Voltage" to check the synchronism conditions. If using a single CT/VT module with both phase voltages and an auxiliary voltage, ensure that only the auxiliary voltage is programmed in one of the sources to be used for synchrocheck. An exception is that synchronism cannot be checked between Delta connected phase VTs and a Wye connected auxiliary voltage.

Table 5-43: V1 and V2 assigned with same signal source

Number	V1 or V2 (source Y)	Required combination		Selected Voltage for comparison
		V1	V2	
1	3 Phase VT bank with Auxiliary VT	3 Phase VT bank	Auxiliary VT	V auxiliary (as set for Source Y)

When both V1 and V2 are assigned with the same source, the relay assigns the three Phase VT bank to V1 and Auxiliary VT to V2 and as programmed per setting "Auxiliary VT connection" used for Synchrocheck. For example, if "Auxiliary VT connection" is programmed to VAG, the synchrocheck element automatically selects VAG from the 3 Phase VT bank of the same source.

NOTE

Refer to the **SYNCHK1 V2 SOURCE** setting description for further information.

Exception: Synchronism cannot be checked between Delta-connected phase VTs and a Wye-connected auxiliary voltage.

2. The relay measures frequency and Volts/Hz from an input on a given source with priorities as established by the configuration of input channels to the source. The relay uses the phase channel of a three-phase set of voltages if programmed as part of that source. The relay uses the auxiliary voltage channel only if that channel is programmed as part of the Source and a three-phase set is not.

Figure 5-168: Synchrocheck logic

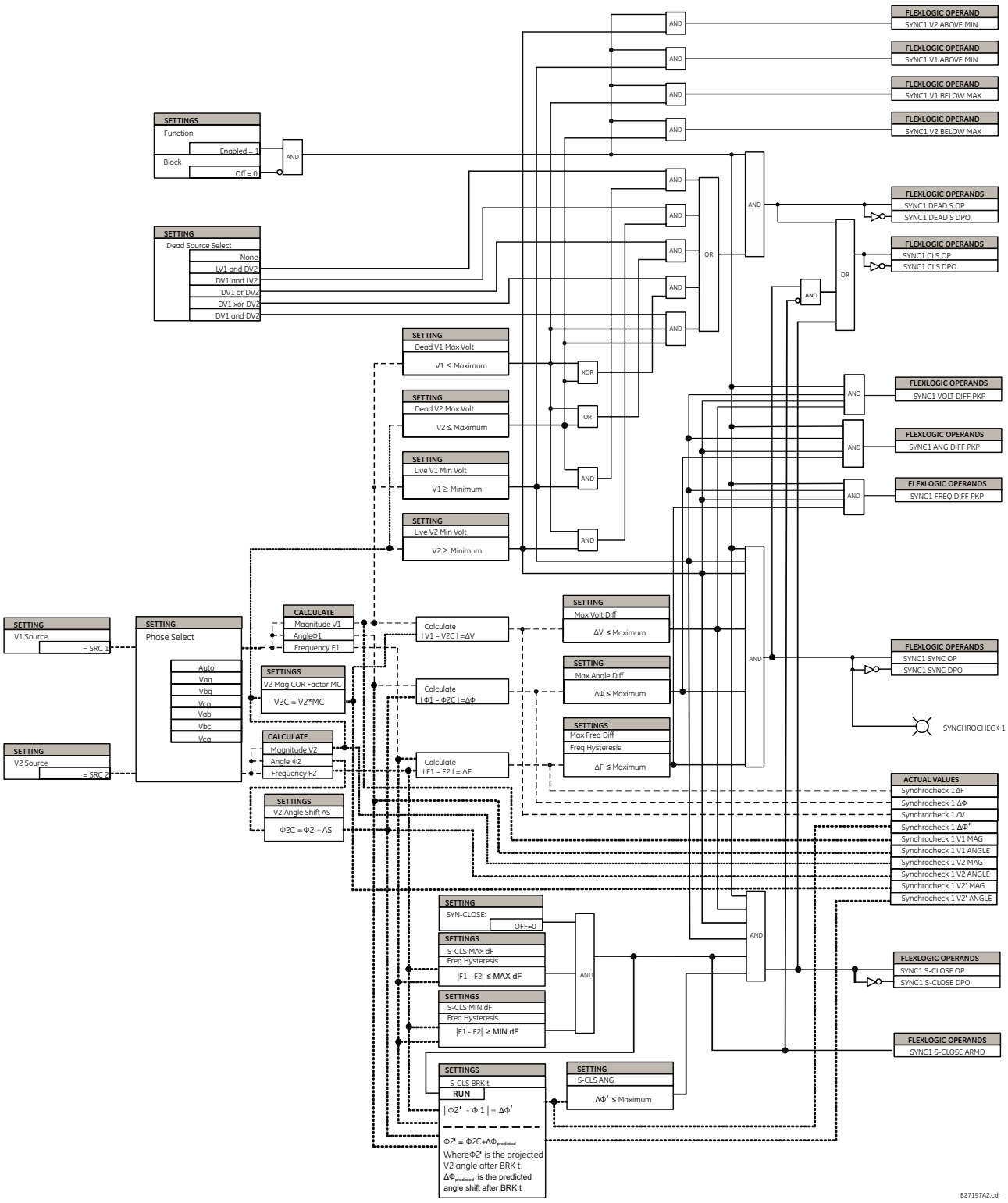

5.9.8 Digital elements

SETTINGS ⇨⇩ CONTROL ELEMENTS ⇨⇩ DIGITAL ELEMENTS ⇨ DIGITAL ELEMENT 1(96)

■ DIGITAL ELEMENT 1 ■	⇔	DIGITAL ELEMENT 1 FUNCTION: Disabled	Range: Disabled, Enabled
	⇩	DIG ELEM 1 NAME: Dig Element 1	Range: up to 16 alphanumeric characters
	⇩	DIG ELEM 1 INPUT: Off	Range: FlexLogic operand
	⇩	DIG ELEM 1 PICKUP DELAY: 0.000 s	Range: 0.000 to 999999.999 s in steps of 0.001
	⇩	DIG ELEM 1 RESET DELAY: 0.000 s	Range: 0.000 to 999999.999 s in steps of 0.001
	⇩	DIGITAL ELEMENT 1 PICKUP LED: Enabled	Range: Disabled, Enabled
	⇩	DIG ELEM 1 BLOCK: Off	Range: FlexLogic operand
	⇩	DIGITAL ELEMENT 1 TARGET: Self-reset	Range: Self-reset, Latched, Disabled
	⇧	DIGITAL ELEMENT 1 EVENTS: Disabled	Range: Disabled, Enabled

NOTE

Digital elements run once per power system cycle.

As such they can easily fail to react to an input signal or a block signal with a duration less than one power system cycle. This also means that digital element output can react up to one power system cycle later than the pickup and reset delay settings indicate.

Do not use digital elements with transient signals, such as communications commands. Do not use digital elements where random delays of up to one cycle cannot be tolerated, such as in high speed protection.

There are 96 identical digital elements available, numbered 1 to 96. A digital element can monitor any FlexLogic operand and present a target message and/or enable events recording depending on the output operand state. The digital element settings include a name to be referenced in any target message, a blocking input from any selected FlexLogic operand, and a timer for pickup and reset delays for the output operand.

DIGITAL ELEMENT 1 INPUT — Selects a FlexLogic operand to be monitored by the digital element.

DIGITAL ELEMENT 1 PICKUP DELAY — Sets the required time delay from element pickup to element operation. If a pickup delay is not required, set to "0," To avoid nuisance alarms, set the delay greater than the operating time of the breaker.

DIGITAL ELEMENT 1 RESET DELAY — Sets the time delay to reset. If a reset delay is not required, set to “0.”

DIGITAL ELEMENT 1 PICKUP LED — This setting enables or disabled the digital element pickup LED. When set to “Disabled,” the operation of the pickup LED is blocked.

Figure 5-169: Digital element logic

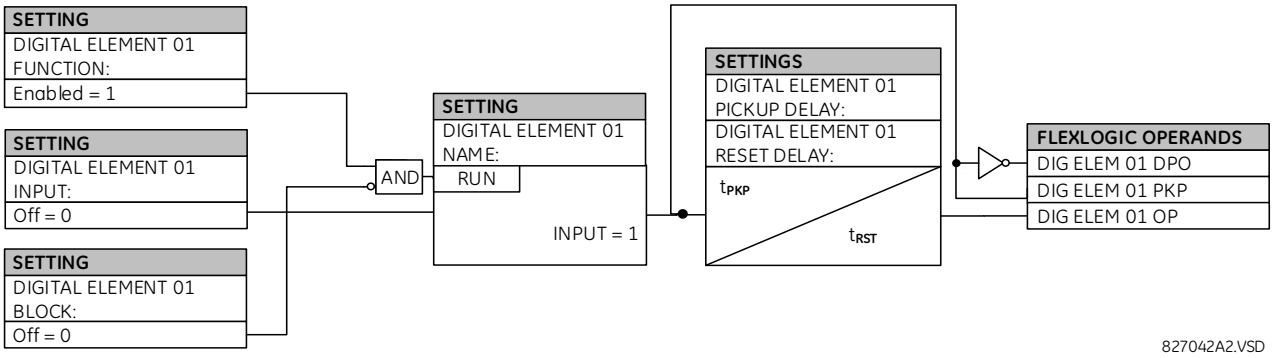

Circuit monitoring applications

Some versions of the digital input modules include an active voltage monitor circuit connected across form-A contacts. The voltage monitor circuit limits the trickle current through the output circuit (see technical specifications for form-A).

As long as the current through the voltage monitor is above a threshold (see technical specifications for form-A), the Cont Op 1 VOn FlexLogic operand is set (for contact input 1—corresponding operands exist for each contact output). If the output circuit has a high resistance or the DC current is interrupted, the trickle current drops below the threshold and the Cont Op 1 VOff FlexLogic operand is set. Consequently, the state of these operands can be used as indicators of the integrity of the circuits in which form-A contacts are inserted.

5

Example 1: Breaker trip circuit integrity monitoring

In many applications it is desired to monitor the breaker trip circuit integrity so that problems can be detected before a trip operation is required. The circuit is considered to be healthy when the voltage monitor connected across the trip output contact detects a low level of current, well below the operating current of the breaker trip coil. If the circuit presents a high resistance, the trickle current falls below the monitor threshold, and an alarm is declared.

In most breaker control circuits, the trip coil is connected in series with a breaker auxiliary contact that is open when the breaker is open (see figure). To prevent unwanted alarms in this situation, the trip circuit monitoring logic must include the breaker position.

Figure 5-170: Trip circuit example 1

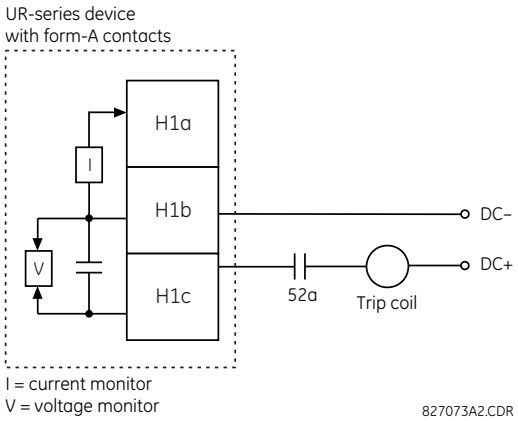

Assume the output contact H1 is a trip contact. Using the contact output settings, this output is given an ID name; for example, "Cont Op 1." Assume a 52a breaker auxiliary contact is connected to contact input H5a to monitor breaker status. Using the contact input settings, this input is given an ID name, for example, "Cont Ip 1," and is set "On" when the breaker is closed. The settings to use digital element 1 to monitor the breaker trip circuit are indicated (EnerVista example shown).

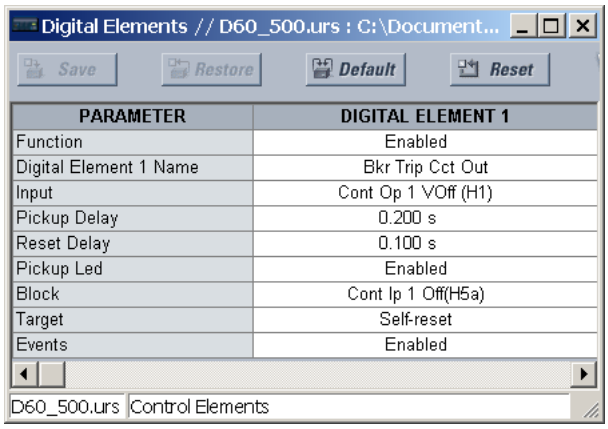

PARAMETER	DIGITAL ELEMENT 1
Function	Enabled
Digital Element 1 Name	Bkr Trip Cct Out
Input	Cont Op 1 VOff (H1)
Pickup Delay	0.200 s
Reset Delay	0.100 s
Pickup Led	Enabled
Block	Cont Ip 1 Off(H5a)
Target	Self-reset
Events	Enabled

Example 2: Breaker trip circuit integrity monitoring

If it is required to monitor the trip circuit continuously, independent of the breaker position (open or closed), a method to maintain the monitoring current flow through the trip circuit when the breaker is open must be provided (as shown in the following figure). This can be achieved by connecting a suitable resistor (see figure) across the auxiliary contact in the trip circuit. In this case, it is not required to supervise the monitoring circuit with the breaker position – the **BLOCK** setting is selected to "Off." In this case, the settings are as follows (EnerVista example shown).

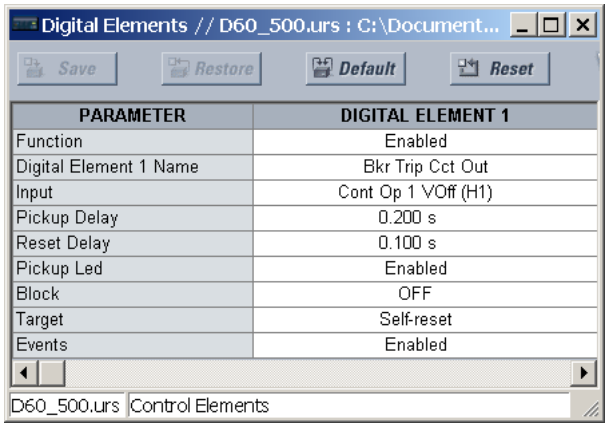

PARAMETER	DIGITAL ELEMENT 1
Function	Enabled
Digital Element 1 Name	Bkr Trip Cct Out
Input	Cont Op 1 VOff (H1)
Pickup Delay	0.200 s
Reset Delay	0.100 s
Pickup Led	Enabled
Block	OFF
Target	Self-reset
Events	Enabled

Figure 5-171: Trip circuit example 2

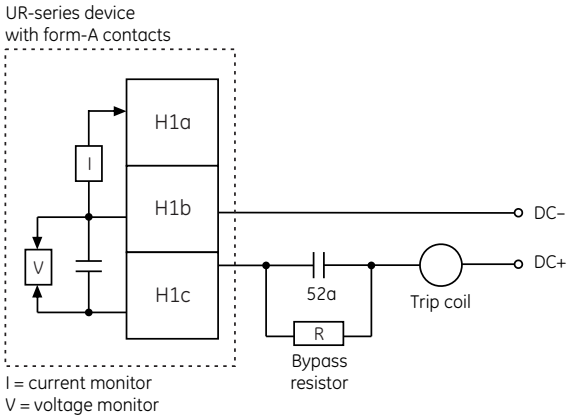

Values for resistor "R"

Power supply	Resistance	Power
24 V DC	1000 O	2 W
30 V DC	5000 O	2 W
48 V DC	10000 O	2 W
110 V DC	25000 O	5 W
125 V DC	25000 O	5 W
250 V DC	50000 O	5 W

827074A3.CDR

NOTE

The wiring connection for two examples above is applicable to both form-A contacts with voltage monitoring and solid-state contact with voltage monitoring.

5.9.9 Digital counters

SETTINGS ⇨⇩ CONTROL ELEMENTS ⇨⇩ DIGITAL COUNTERS ⇨⇩ COUNTER 1(8)

■ COUNTER 1 ■	⇔	COUNTER 1 FUNCTION: Disabled	Range: Disabled, Enabled
	⇩	COUNTER 1 NAME: Counter 1	Range: up to 12 alphanumeric characters
	⇩	COUNTER 1 UNITS:	Range: up to six alphanumeric characters
	⇩	COUNTER 1 PRESET: 0	Range: –2,147,483,648 to +2,147,483,647
	⇩	COUNTER 1 COMPARE: 0	Range: –2,147,483,648 to +2,147,483,647
	⇩	COUNTER 1 UP: Off	Range: FlexLogic operand
	⇩	COUNTER 1 DOWN: Off	Range: FlexLogic operand
	⇩	COUNTER 1 BLOCK: Off	Range: FlexLogic operand
	⇩	CNT1 SET TO PRESET: Off	Range: FlexLogic operand
	⇩	COUNTER 1 RESET: Off	Range: FlexLogic operand
	⇩	COUNT1 FREEZE/RESET: Off	Range: FlexLogic operand
	⇧	COUNT1 FREEZE/COUNT: Off	Range: FlexLogic operand

There are eight identical digital counters, numbered from 1 to 8. A digital counter counts the number of state transitions from Logic 0 to Logic 1. The counter is used to count operations such as the pickups of an element, the changes of state of an external contact (for example, breaker auxiliary switch), or pulses from a watt-hour meter.

COUNTER 1 UNITS — Assigns a label to identify the unit of measure pertaining to the digital transitions to be counted. The units label appears in the corresponding actual values status.

COUNTER 1 PRESET — Sets the count to a required preset value before counting operations begin, as in the case where a substitute relay is to be installed in place of an in-service relay, or while the counter is running.

COUNTER 1 COMPARE — Sets the value to which the accumulated count value is compared. Three FlexLogic output operands are provided to indicate if the present value is 'more than (HI)', 'equal to (EQL)', or 'less than (LO)' the set value.

COUNTER 1 UP — Selects the FlexLogic operand for incrementing the counter. If an enabled UP input is received when the accumulated value is at the limit of +2,147,483,647 counts, the counter rolls over to –2,147,483,648.

COUNTER 1 DOWN — Selects the FlexLogic operand for decrementing the counter. If an enabled DOWN input is received when the accumulated value is at the limit of –2,147,483,648 counts, the counter rolls over to +2,147,483,647.

COUNTER 1 BLOCK — Selects the FlexLogic operand for blocking the counting operation. All counter operands are blocked.

CNT1 SET TO PRESET — Selects the FlexLogic operand used to set the count to the preset value. The counter sets to the preset value in the following situations:

- When the counter is enabled and the **CNT1 SET TO PRESET** operand has the value 1 (when the counter is enabled and **CNT1 SET TO PRESET** operand is 0, the counter sets to 0)
- When the counter is running and the **CNT1 SET TO PRESET** operand changes the state from 0 to 1 (**CNT1 SET TO PRESET** changing from 1 to 0 while the counter is running has no effect on the count)
- When a reset or reset/freeze command is sent to the counter and the **CNT1 SET TO PRESET** operand has the value 1 (when a reset or reset/freeze command is sent to the counter and the **CNT1 SET TO PRESET** operand has the value 0, the counter sets to 0)

COUNTER 1 RESET — Selects the FlexLogic operand for setting the count to either "0" or the preset value depending on the state of the **CNT1 SET TO PRESET** operand.

COUNTER 1 FREEZE/RESET — Selects the FlexLogic operand for capturing (freezing) the accumulated count value into a separate register with the date and time of the operation, and resetting the count to "0."

COUNTER 1 FREEZE/COUNT — Selects the FlexLogic operand for capturing (freezing) the accumulated count value into a separate register with the date and time of the operation, and continuing counting. The present accumulated value and captured frozen value with the associated date/time stamp are available as actual values. If control power is interrupted, the accumulated and frozen values are saved into non-volatile memory during the power-down operation.

Figure 5-172: Digital counter logic

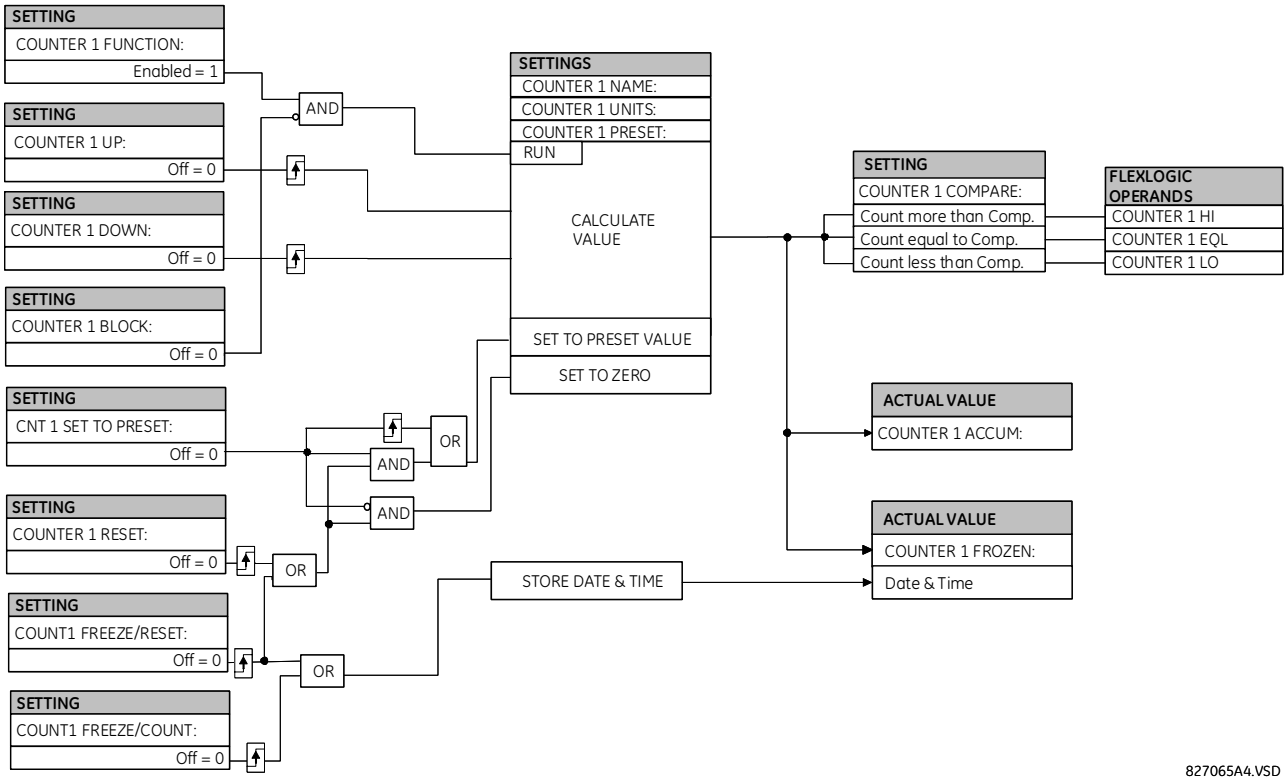

5.9.10 Monitoring elements

5.9.10.1 Menu

SETTINGS ⇨⇩ CONTROL ELEMENTS ⇨⇩ MONITORING ELEMENTS

■ MONITORING ■ ELEMENTS	⇔	■ VT FUSE FAILURE 1 ■	See below
		⇩	
	⇕	■ VT FUSE FAILURE 6 ■	
	⇕	■ CT FAILURE ■ DETECTOR 1	See page 5-342
		⇩	
	⇕	■ CT FAILURE ■ DETECTOR 6	
	⇕	■ THERMAL OVERLOAD ■ PROTECTION	See page 5-344
	⇧	■ HARMONIC ■ DETECTION	See page 5-348

5.9.10.2 VT fuse failure

SETTINGS ⇨⇩ CONTROL ELEMENTS ⇨⇩ MONITORING ELEMENTS ⇨⇩ VT FUSE FAILURE 1(6)

■ VT FUSE FAILURE 1 ■	⇔	VT FUSE FAILURE 1 FUNCTION: Disabled	Range: Disabled, Enabled

⇕	**VT FUSE FAILURE 1 ALARM DELAY: 1.000 s**	Range: 0.000 to 65.535 s in steps of 0.001
⇕	**NEUTRAL WIRE OPEN 1 DETECTION: Disabled**	Range: Disabled, Enabled
⇧	**NEUTRAL WIRE OPEN 1 3 HARM PKP: 0.100 pu**	Range: 0.004 to 3.000 pu in steps of 0.001

Every signal source includes a fuse failure scheme. A signal source must have a three-phase VT bank and a three-phase CT bank assigned to it, in order for the fuse failure scheme to operate.

The VT fuse failure detector is used to raise an alarm and/or block elements that operate incorrectly for a full or partial loss of AC potential caused by one or more blown fuses. Some elements that can be blocked (via the BLOCK input) are distance, voltage restrained overcurrent, and directional current.

There are two classes of fuse failure that occur:

- Class A — Loss of one or two phases
- Class B — Loss of all three phases

Different means of detection are required for each class. An indication of class A failures is a significant level of negative-sequence voltage, whereas an indication of class B failures is when positive sequence current is present and there is an insignificant amount of positive sequence voltage. Also, a rapid decrease in the phase voltages magnitude from a healthy voltage level without disturbance in current can indicate VT fuse fail conditions. These noted indications of fuse failure can also be present when faults are present on the system, so a means of detecting faults and inhibiting fuse failure declarations during these events is provided.

Once the fuse failure condition is declared, it is sealed-in until the cause that generated it disappears.

An additional condition is introduced to inhibit a fuse failure declaration when the monitored circuit is de-energized; positive-sequence voltage and current are both below threshold levels.

VT FUSE FAILURE 1 FUNCTION — Enables and disables the fuse failure feature for Source 1 VT Fuse Fail.

NEUTRAL WIRE OPEN 1 DETECTION — Enables and disables the VT neutral wire open detection function. When the VT is connected in Delta, do not enable this function because there is no neutral wire for Delta connected VT.

NEUTRAL WIRE OPEN 1 3 HRAM PKP — Specifies the pickup level of 3rd harmonic of 3V0 signal for the **NEUTRAL WIRE OPEN DETECTION** logic to pick up.

Base voltage for this element is **PHASE VT SECONDARY** setting in the case of WYE VTs and (**PHASE VT SECONDARY**)/ $\sqrt{3}$ in case of DELTA VTs. The setting is found under **SETTINGS ⇨⇩ SYSTEM SETUP ⇨ AC INPUTS ⇨⇩ VOLTAGE BANK ⇨ PHASE VT SECONDARY**.

Figure 5-173: VT fuse fail logic

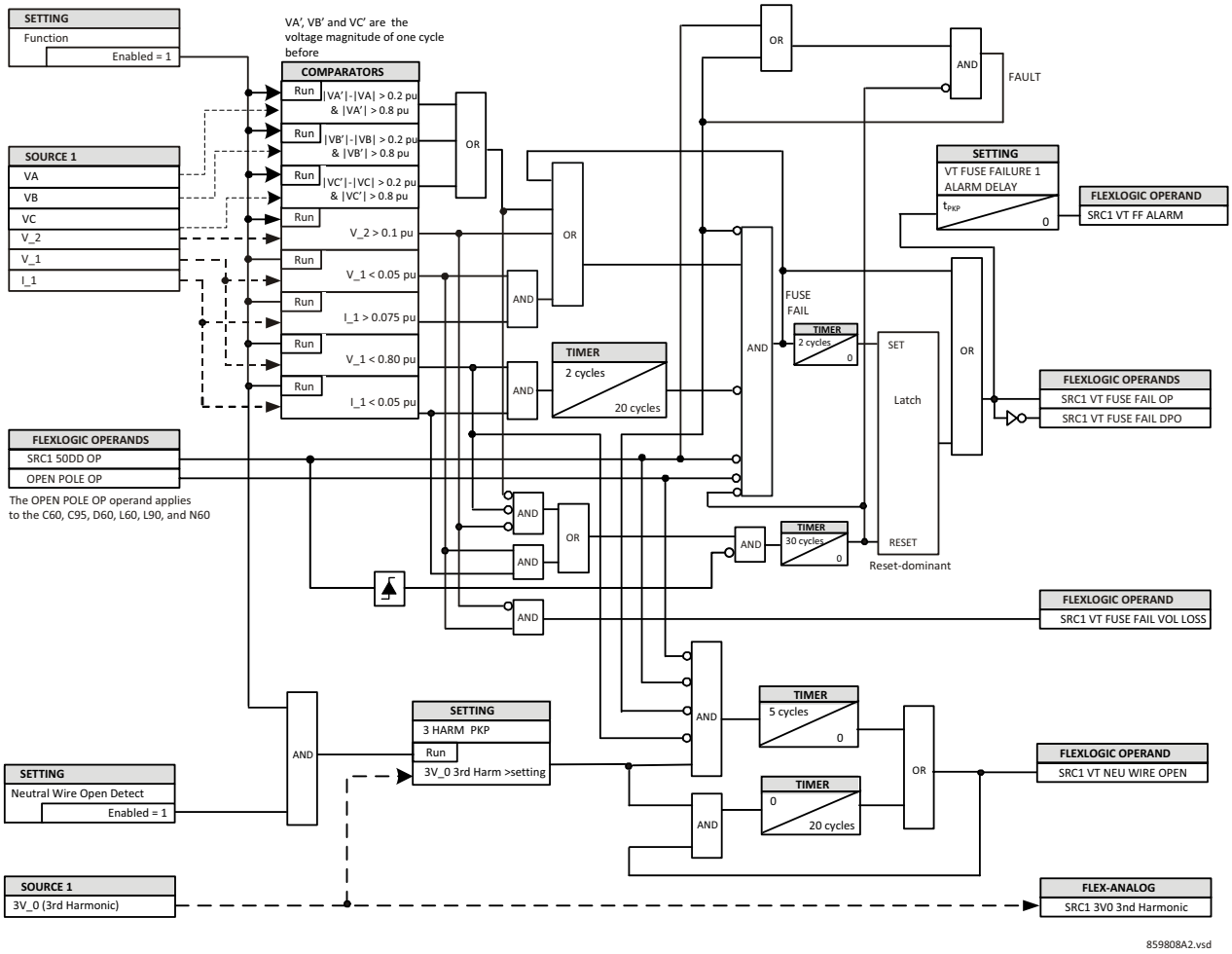

5.9.10.3 CT failure detector

SETTINGS ⇨⇩ CONTROL ELEMENTS ⇨⇩ MONITORING ELEMENTS ⇨⇩ CT FAILURE DETECTOR 1(6)

■ CT FAILURE ■ DETECTOR 1	⇔	**CT FAIL 1 FUNCTION: Disabled**	Range: Disabled, Enabled
	⇩	**CT FAIL 1 BLOCK: Off**	Range: FlexLogic operand
	⇩	**CT FAIL 1 3I0 INP 1: SRC 1**	Range: SRC 1, SRC 2, SRC 3, SRC 4, SRC 5, SRC 6
	⇩	**CT FAIL 1 3I0 INP 1 PKP: 0.2 pu**	Range: 0.1 to 2.0 pu in steps of 0.1
	⇩	**CT FAIL 1 3I0 INP 2: SRC 2**	Range: SRC 1, SRC 2, SRC 3, SRC 4, SRC 5, SRC 6
	⇩	**CT FAIL 1 3I0 INP 2 PKP: 0.2 pu**	Range: 0.1 to 2.0 pu in steps of 0.1
	⇩	**CT FAIL 1 3V0 INPUT: SRC 1**	Range: SRC 1, SRC 2, SRC 3, SRC 4, SRC 5, SRC 6
	⇩	**CT FAIL 1 3V0 INPUT PKP: 0.20 pu**	Range: 0.04 to 2.00 pu in steps of 0.01

⇕	**CT FAIL 1 PICKUP DELAY: 1.000 s**	Range: 0.000 to 65.535 s in steps of 0.001
⇕	**CT FAIL 1 TARGET: Self-reset**	Range: Self-reset, Latched, Disabled
⇧	**CT FAIL 1 EVENTS: Disabled**	Range: Disabled, Enabled

The CT failure function detects problems with system current transformers used to supply current to the relay. This logic detects the presence of a zero-sequence current at the supervised source of current without a simultaneous zero-sequence current at another source, zero-sequence voltage, or some protection element condition.

The CT failure logic (see later) is based on the presence of the zero-sequence current in the supervised CT source and the absence of one of three or all of the three following conditions:

- Zero-sequence current at different source current (can be different set of CTs or different CT core of the same CT)
- Zero-sequence voltage at the assigned source
- Appropriate protection element or remote signal

Settings are described as follows.

CT FAIL 1 FUNCTION — Enables or disables operation of the CT failure element.

CT FAIL 1 BLOCK — Selects a FlexLogic operand to block operation of the element during some condition (for example, an open pole in process of the single pole tripping-reclosing). Local signals or remote signals representing operation of some remote current protection elements via communication channels can also be chosen.

CT FAIL 1 3I0 INPUT 1 — Selects the current source for input 1. The most critical protection element should also be assigned to the same source.

CT FAIL 1 3I0 INPUT 1 PICKUP — Selects the 3I_0 pickup value for input 1 (the main supervised CT source).

CT FAIL 1 3I0 INPUT 2 — Selects the current source for input 2. Input 2 should use a different set of CTs or a different CT core of the same CT. If 3I_0 does not exist at source 2, then a CT failure is declared.

CT FAIL 1 3I0 INPUT 2 PICKUP — Selects the 3I_0 pickup value for input 2 (different CT input) of the relay.

CT FAIL 1 3V0 INPUT — Selects the voltage source.

CT FAIL 1 3V0 INPUT PICKUP — Specifies the pickup value for the 3V_0 source.

CT FAIL 1 PICKUP DELAY — Specifies the pickup delay of the CT failure element.

Figure 5-174: CT failure detector logic

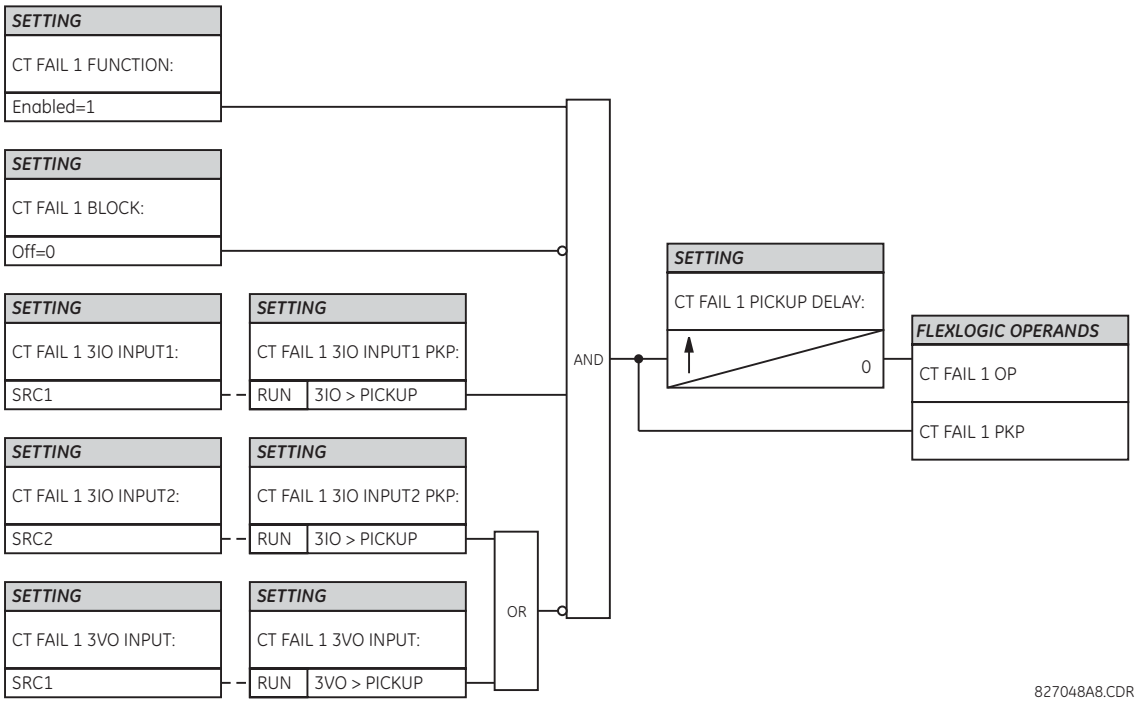

5

5.9.10.4 Thermal overload protection (ANSI 49)

SETTINGS ⇨⇩ CONTROL ELEMENTS ⇨⇩ MONITORING ELEMENTS ⇨⇩ THERMAL OVERLOAD PROTECTION ⇨ THERMAL PROTECTION 1(2)

■ THERMAL ■ PROTECTION 1	⇔	**THERMAL PROTECTION 1 FUNCTION: Disabled**	Range: Disabled, Enabled
	⇩	**THERMAL PROTECTION 1 SOURCE: SRC1**	Range: SRC 1, SRC 2, SRC 3, SRC 4, SRC 5, SRC 6
	⇩	**THERMAL PROTECTION 1 MODE: 3-PHASE**	Range: 3-Phase, 1-Phase
	⇩	**THERMAL PROTECTION 1 BASE CURR: 0.80 pu**	Range: 0.20 to 3.00 pu in steps of 0.01
	⇩	**THERMAL PROTECTION 1 k FACTOR: 1.10**	Range: 0.20 to 4.00 in steps of 0.05
	⇩	**THERMAL PROTECTION 1 ALARM LEVEL: 0.5 pu**	Range: 0.2 to 1.0 pu in steps of 0.1
	⇩	**THERM PROT 1 TRIP TIME CONST: 45.0 min**	Range: 0.0 to 999.0 minutes in steps of 0.1
	⇩	**THERM PROT 1 RESET TIME CONST: 45.0 min**	Range: 0.0 to 999.0 minutes in steps of 0.1
	⇩	**THERM PROT 1 MINIM RESET TIME: 20.0 min**	Range: 0.0 to 999.0 minutes in steps of 0.1
	⇩	**THERM PROT 1 RESET: Off**	Range: FlexLogic operand
	⇩	**THERM PROT 1 BLOCK: Off**	Range: FlexLogic operand

⇕	**THERMAL PROTECTION 1 TARGET: Self-reset**	Range: Self-reset, Latched, Disabled
⇧	**THERMAL PROTECTION 1 EVENTS: Disabled**	Range: Disabled, Enabled

The thermal overload protection element corresponds to the IEC 255-8 standard and is used to detect thermal overload conditions in protected power system elements. Choosing an appropriate time constant element can be used to protect different elements of the power system.

The cold curve characteristic is applied when the estimated I_p current is less than 10% of the base current. If I_p current is greater or equal than 10% than the base current, then the hot curve characteristic is applied. The I_p current is estimated with a fixed time constant for both cooling and heating that reaches to the final value in two seconds on a step change (either step up or step down) signal.

The IEC255-8 cold curve is defined as follows:

$$t_{op} = \tau_{op} \times \ln\left(\frac{I^2}{I^2 - (k \times I_B)^2}\right) \qquad \textbf{Eq. 5-26}$$

The IEC255-8 hot curve is defined as follows:

$$t_{op} = \tau_{op} \times \ln\left(\frac{I^2 - I_p^2}{I^2 - (k \times I_B)^2}\right) \qquad \textbf{Eq. 5-27}$$

where

t_{op} = time to operate
τ_{op} = thermal protection trip time constant
I = measured overload RMS current
I_p = measured load RMS current before overload occurs
k = IEC 255-8 k-factor applied to I_B, defining maximum permissible current above nominal current. A typical value range for this k factor is 1.0 to 1.5 per the standard.
I_B = protected element base (nominal) current

To ensure element accuracy for high overcurrent conditions, the maximum value of $I/(k \times I_B)$ is limited to 8, even when realistically it is exceeding this value.

The reset time of the thermal overload protection element is also time delayed using following formula:

$$t_{rst} = \tau_{rst} \times \ln\left(\frac{(k \times I_B)^2}{\left|I^2 - (k \times I_B)^2\right|}\right) + T_{min} \qquad \textbf{Eq. 5-28}$$

where

τ_{rst} = thermal protection trip time constant
T_{min} = a minimum reset time setting

Figure 5-175: IEC 255-8 sample operate and reset curves

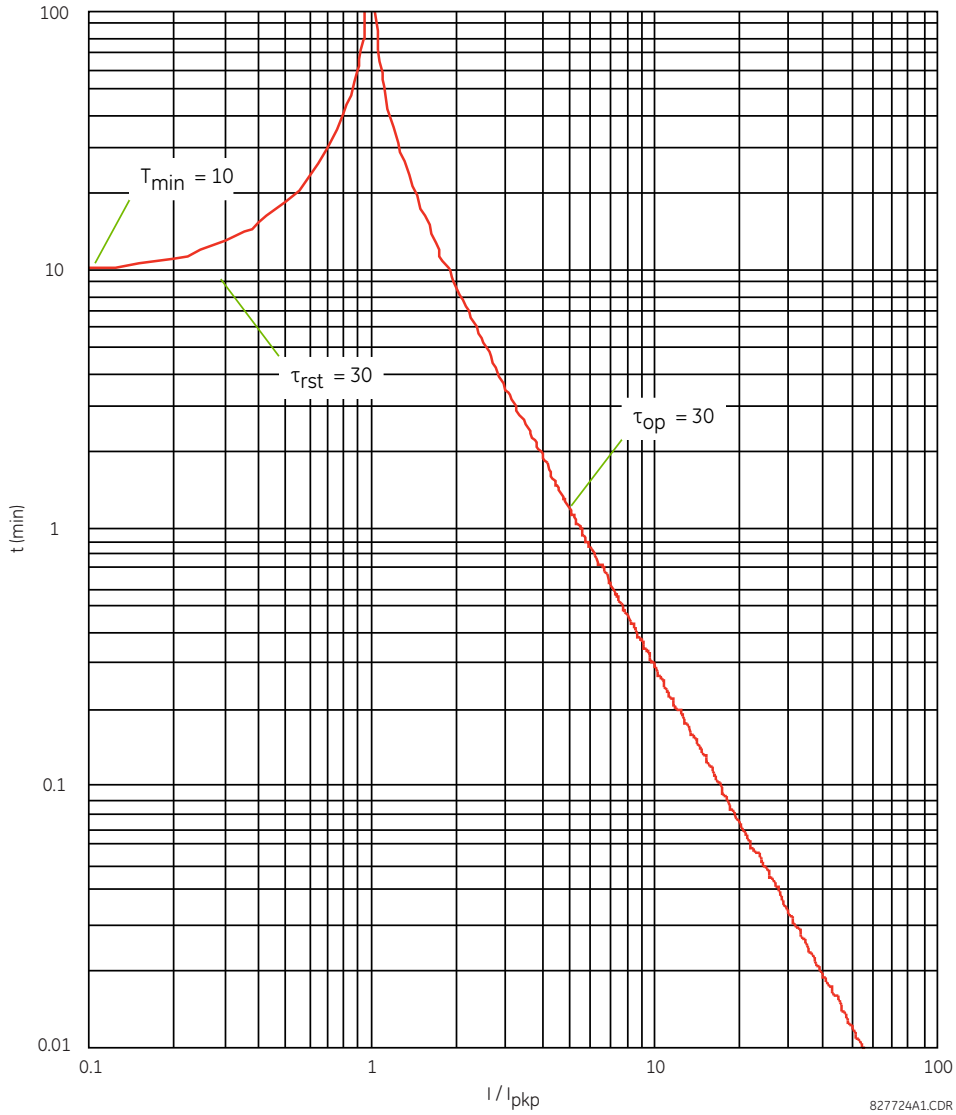

The thermal overload protection element estimates accumulated thermal energy E using the following equations calculated each power cycle. When current is greater than the pickup level, $I_n > k \times I_B$, element starts increasing the thermal energy:

$$E_n = E_{n-1} + \frac{\Delta t}{t_{op(In)}} \qquad \textbf{Eq. 5-29}$$

When current is less than the dropout level, $I_n > 0.97 \times k \times I_B$, the element starts decreasing the thermal energy:

$$E_n = E_{n-1} - \frac{\Delta t}{t_{rst(In)}} \qquad \textbf{Eq. 5-30}$$

where

Δt is the power cycle duration
n is the power cycle index
$t_{op(In)}$ is the trip time calculated at index n as per the IEC255-8 cold curve or hot curve equations
$t_{rst(In)}$ is the reset time calculated at index n as per the reset time equation

I_n is the measured overload RMS current at index n
E_n is the accumulated energy at index n
E_{n-1} is the accumulated energy at index n – 1

The thermal overload protection element removes the THERMAL PROT 1 OP and THERMAL PROT 1 ALARM output operand when E < 0.05. In case of emergency, the thermal memory and as a result THERMAL PROT 1 OP and THERMAL PROT 1 ALARM output operands can be reset using **THERM PROT 1 RESET** setting.

The calculations are performed per the selected mode (three-phase or single-phase). For three-phase, calculations are performed per phase. If the accumulated energy reaches value 1 pu in any phase, the thermal overload protection element operates and only resets when energy is less than 0.05 in all three phases. The THERMAL PROT 1 ALARM operand asserts if accumulated energy reaches the selected **THERMAL PROTECTION 1 ALARM LEVEL** setting in any phase an resets only when energy is below 0.05 in all three phases.

In single-phase mode, the thermal energy of only the ground channel IG of the assigned source is accumulated.

Table 5-44: Typical time constants

Protected equipment	Time constant	Minimum reset time
Capacitor bank	10 minutes	30 minutes
Overhead line	10 minutes	20 minutes
Air-core reactor	40 minutes	30 minutes
Busbar	60 minutes	20 minutes
Underground cable	20 to 60 minutes	60 minutes

The figure shows the logic for the thermal overload protection element.

Figure 5-176: Thermal overload protection logic

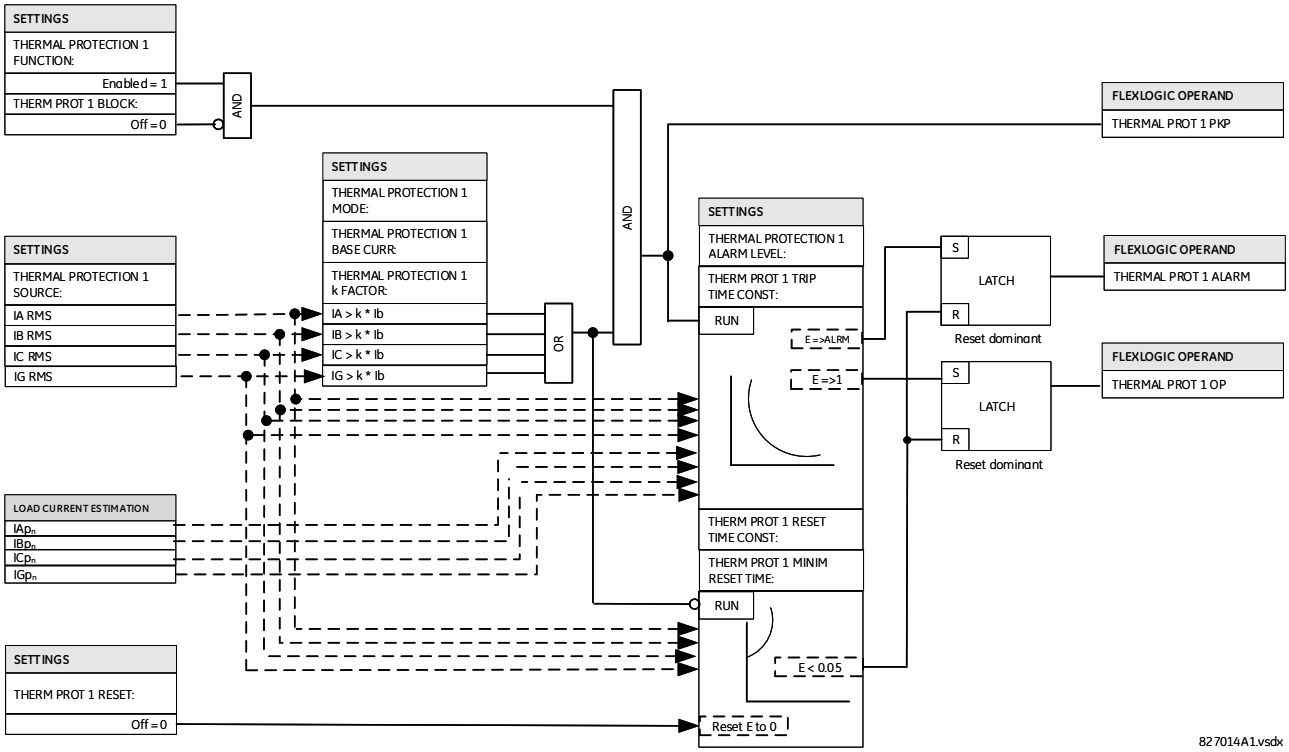

5.9.10.5 Harmonic detection

SETTINGS ⇨⇩ CONTROL ELEMENTS ⇨⇩ MONITORING ELEMENTS ⇨⇩ HARMONIC DETECTION ⇨⇩ HARMONIC DET 1(6)

■ HARMONIC DET 1 ■	⇔	HARMONIC DET 1 FUNCTION: Disabled	Range: Disabled, Enabled
	⇩	HARMONIC DET 1 SOURCE: SRC 1	Range: SRC 1, SRC 2, SRC 3, SRC 4, SRC 5, SRC 6
	⇩	HARMONIC DET 1 HARMONIC: 2nd	Range: DC, 2nd, 3rd, 4th, 5th, THD
	⇩	HARMONIC DET 1 MIN PHS CUR: 0.2 pu	Range: 0.1 to 1.0 pu in steps of 0.01
	⇩	HARMONIC DET 1 MAX PHS CUR: 5.0 pu	Range: 1.0 to 30 pu in steps of 0.01
	⇩	HARMONIC DET 1 PHASE FOR OPER: ANY ONE	Range: ANY ONE, ANY TWO, ALL THREE, AVERAGE
	⇩	HARMONIC DET 1 PHS PICKUP: 20%	Range: 2.0 to 100% in steps of 0.1
	⇩	HARMONIC DET 1 MIN GND CUR: 0.2 pu	Range: 0.1 to 1.0 pu in steps of 0.01
	⇩	HARMONIC DET 1 MAX GND CUR: 1.0 pu	Range: 1.0 to 30 pu in steps of 0.01
	⇩	HARMONIC DET 1 GND PICKUP: 20%	Range: 0.1 to 100% in steps of 0.1
	⇩	HARMONIC DET 1 PKP DELAY: 0 s	Range: 0.00 to 600 s in steps of 0.01
	⇩	HARMONIC DET 1 BLK: Off	Range: Off, On, FlexLogic operand
	⇩	HARMONIC DET 1 TARGET: Self-reset	Range: Self-reset, Latched, Disabled
	⇧	HARMONIC DET 1: EVENTS: Disabled	Range: Disabled, Enabled

Transformer energization, voltage recovery following a clearance of external faults, startup or shutdown of generators connected to transformers, or following a load injection can cause excessive magnetizing inrush current. The nature of the magnetizing inrush current contains significant harmonics. The fundamental magnitude of this magnetizing inrush current can be several times of the rated transformer overload current. Depending on the sensitivity of the feeder or line overcurrent protection elements, magnetizing inrush current can cause an undesired operation on these overcurrent protection elements.

In addition, DC offset can cause saturation in current transformers as well as in the input current transformers of protective relays and can also result in undesired operation on some sensitive protection elements, such as differential protection, restricted earth fault protection, or sequence overcurrent protection elements.

The Harmonic Detection element monitors one of the selected quantities, including DC offset, 2nd to 5th harmonic, or Total Harmonics Distortion (THD), that are present in the phase currents and ground current. It adds delay or blocking to prevent undesired operation. Harmonics are calculated and presented as a percent value relative to the fundamental frequency phasor magnitude.

NOTE

When the output of this element is used for blocking protection functions, apply it directly (combination with other FlexLogic operands adds delay to the blocking).

HARMONIC DET 1 FUNCTION — This setting enables and disables the Harmonic Detection element.

HARMONIC DET 1 SOURCE — Indicates the signal source for this element. Phase currents are taken from the three-phase CT bank assigned to this source. Ground current is taken from the same source from the ground CT channel.

HARMONIC DET 1 HARMONIC — This setting selects DC, harmonic (2nd to 5th), or THD as the input quantity to be compared against the pickup threshold in this element. Note that DC, harmonic, and THD are expressed in percent relative to the fundamental magnitude. This setting applies to all four channels of the selected source. If detection of another harmonic is required, then set up a separate Harmonic Detection element.

This setting applies to all four channels of the selected source, if detection of another harmonic is required, then set up a separate Harmonic Detection element.

HARMONIC DET 1 MIN PHS CUR — This setting defines the minimum fundamental frequency current phasor magnitude required to allow the respective (phase) logic in the harmonic detection element to operate.

HARMONIC DET 1 MAX PHS CUR — This setting defines the maximum fundamental frequency current phasor magnitude of the phases above which the harmonic detection phase output is inhibited.

HARMONIC DET 1 PHASE FOR OPER — This setting defines the phases required for assertion of the HARMONIC DET 1 OP operand (except ground current channel). Options are as follows:

ANY ONE — At least one phase picked up (DEFAULT)

ANY TWO — Two or more phases picked up

ALL THREE — All three phases picked up

AVERAGE — The average of three-phase harmonics or THDs picked up

If set to **AVERAGE**, the relay calculates the average level of the selected harmonic and compares this level against the pickup setting. Averaging of the selected harmonic follows an adaptive algorithm depending on the fundamental current magnitude per-phase. If the fundamental magnitude on any of the three phases falls outside of the defined range based on the MIN PHS CUR and the MAX PHS CUR settings, the selected harmonic current from that phase is dropped (zeroed) from the equation for averaging, and the divider is decreased from 3 to 2. The same happens if the magnitude of the fundamental phasor on one of the remaining two phases falls out of the defined range based on the MIN PHS CUR and MAX PHS CUR settings. In this case, the selected harmonic on this phase is dropped from summation, and the divider is decreased to 1.

HARMONIC DET 1 PHS PICKUP — This setting defines the pickup setting for the phase harmonic detection comparator of this element.

HARMONIC DET 1 MIN GND CUR — This setting defines the minimum fundamental frequency ground current phasor magnitude required to allow the respective (ground) logic in this harmonic detection element to operate.

HARMONIC DET 1 MAX GND CUR — This setting defines the maximum fundamental frequency ground current phasor magnitude above which the harmonic detection ground output is inhibited.

HARMONIC DET 1 GND PICKUP — This setting defines the pickup setting for ground harmonic detection comparator of this element.

The ground harmonic detection comparator of this element is connected to the ground channel of a CT module. For standard channels, the conversion range is from 0.02 to 46 times the CT rating. For sensitive channels (sensitive ground CT types), the conversion range is from 0.002 to 4.6 times the CT rating.

HARMONIC DET 1 PKP DELAY — This setting defines the pickup delay setting for this element.

HARMONIC DET 1 BLK — Assertion of the operand assigned to this setting blocks operation of the Harmonic Detection element.

HARMONIC DET 1 EVENTS — This setting enables and disables the logging of Harmonic Detection events in the event recorder.

Figure 5-177: Harmonic detection logic

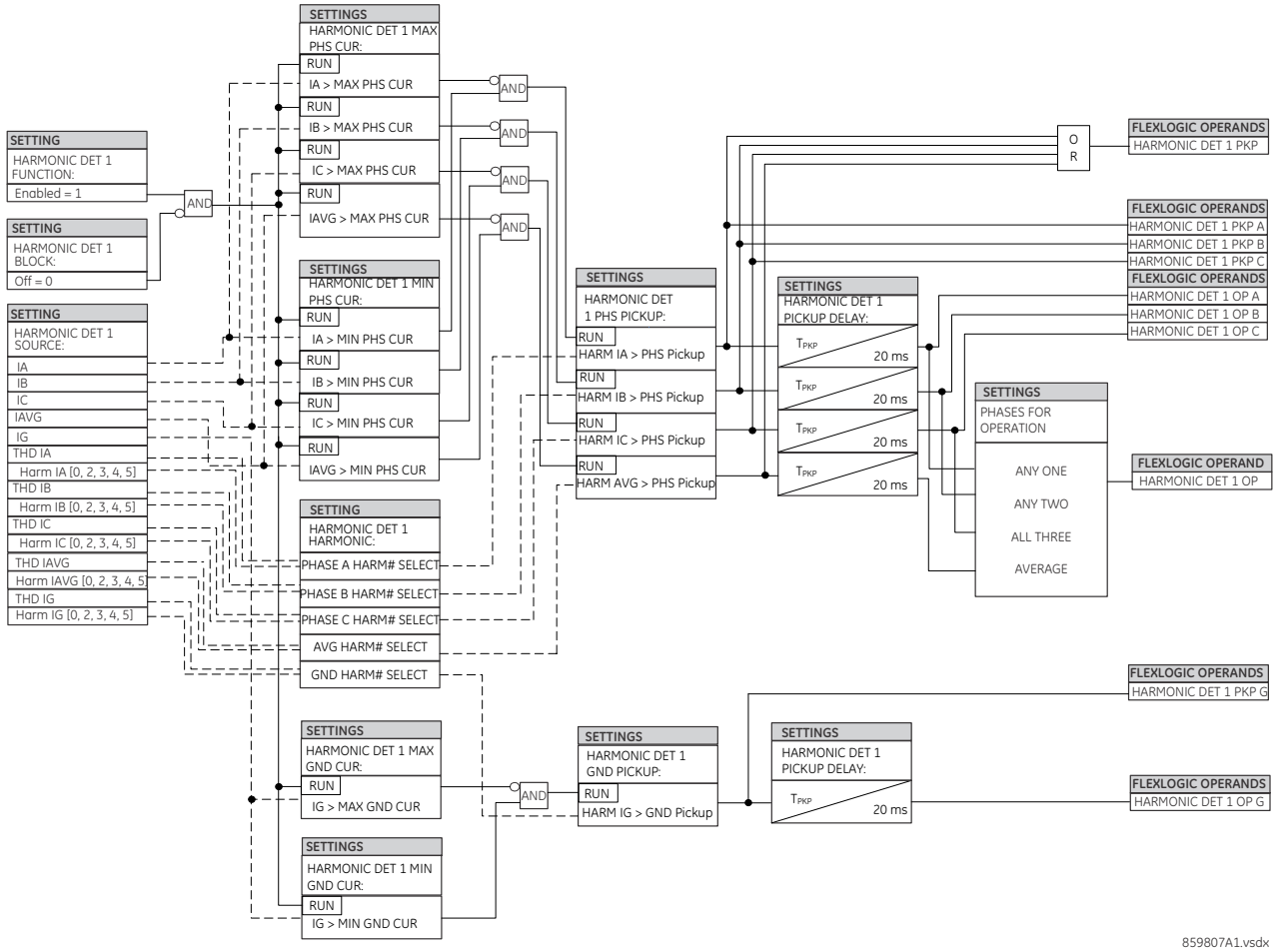

5.9.11 Frequency rate of change (ANSI 81R)

SETTINGS ⇨⇩ CONTROL ELEMENTS ⇨⇩ FREQUENCY RATE OF CHANGE ⇨ FREQUENCY RATE OF CHANGE 1(4)

■ FREQUENCY RATE ■ OF CHANGE 1	⇔	**FREQ RATE 1 FUNCTION: Disabled**	Range: Disabled, Enabled
	⇩	**FREQ RATE 1 SOURCE: SRC 1**	Range: SRC 1, SRC 2, SRC 3, SRC 4, SRC 5, SRC 6
	⇩	**FREQ RATE 1 TREND: Increasing**	Range: Increasing, Decreasing, Bi-directional
	⇩	**FREQ RATE 1 PICKUP: 0.50 Hz/sec**	Range: 0.10 to 15.00 Hz/sec in steps of 0.01
	⇩	**FREQ RATE 1 OV SUPV PICKUP: 0.700 pu**	Range: 0.100 to 3.000 pu in steps of 0.001
	⇩	**FREQ RATE 1 OC SUPV PICKUP: 0.200 pu**	Range: 0.020 to 30.000 pu in steps of 0.001
	⇩	**FREQ RATE 1 MIN FREQUENCY: 45.00 Hz**	Range: 20.00 to 80.00 Hz in steps of 0.01
	⇩	**FREQ RATE 1 MAX FREQUENCY: 65.00 Hz**	Range: 20.00 to 80.00 Hz in steps of 0.01

⇕	**FREQ RATE 1 PICKUP DELAY: 0.000 s**	Range: 0 to 65.535 s in steps of 0.001
⇕	**FREQ RATE 1 RESET DELAY: 0.000 s**	Range: 0 to 65.535 s in steps of 0.001
⇕	**FREQ RATE 1 BLOCK: Off**	Range: FlexLogic operand
⇕	**FREQ RATE 1 TARGET: Self-reset**	Range: Self-reset, Latched, Disabled
⇧	**FREQ RATE 1 EVENTS: Disabled**	Range: Disabled, Enabled

The element responds to rate of change of frequency with voltage, current and frequency supervision.

FREQ RATE 1 TREND — This setting configures the element to respond to increasing or decreasing frequency, or to frequency change in either direction.

FREQ RATE 1 PICKUP — This setting specifies an intended df/dt pickup threshold. For applications monitoring a decreasing trend, set **FREQ RATE 1 TREND** to "Decreasing" and specify the pickup threshold accordingly. The operating condition is: -df/dt > Pickup.

For applications monitoring an increasing trend, set **FREQ RATE 1 TREND** to "Increasing" and specify the pickup threshold accordingly. The operating condition is: df/dt > Pickup.

For applications monitoring rate of change of frequency in any direction set **FREQ RATE 1 TREND** to "Bi-Directional" and specify the pickup threshold accordingly. The operating condition is: abs (df/dt) > Pickup.

FREQ RATE 1 OV SUPV PICKUP — This setting defines the minimum voltage level required for operation of the element. The supervising function responds to the positive-sequence voltage. Use overvoltage supervision to prevent operation under specific system conditions, such as faults.

FREQ RATE 1 OC SUPV PICKUP — This setting defines minimum current level required for operation of the element. The supervising function responds to the positive-sequence current. Typical application includes load shedding. Set the pickup threshold to 0.020 if no overcurrent supervision is required.

FREQ RATE 1 MIN FREQUENCY — This setting defines the minimum frequency level required for operation of the element. The setting can be used to effectively block the feature based on frequency. For example, if the intent is to monitor an increasing trend but only if the frequency is already above certain level, set this setting to the required frequency level.

FREQ RATE 1 MAX FREQUENCY — This setting defines the maximum frequency level required for operation of the element. The setting can be used to effectively block the feature based on frequency. For example, if the intent is to monitor a decreasing trend but only if the frequency is already below a certain level (such as for load shedding), set this setting to the required frequency level.

NOTE

If the signal source assigned to the frequency rate of change element is only set to auxiliary VT, then the minimum voltage supervision is 3 V.

Figure 5-178: Frequency rate of change logic

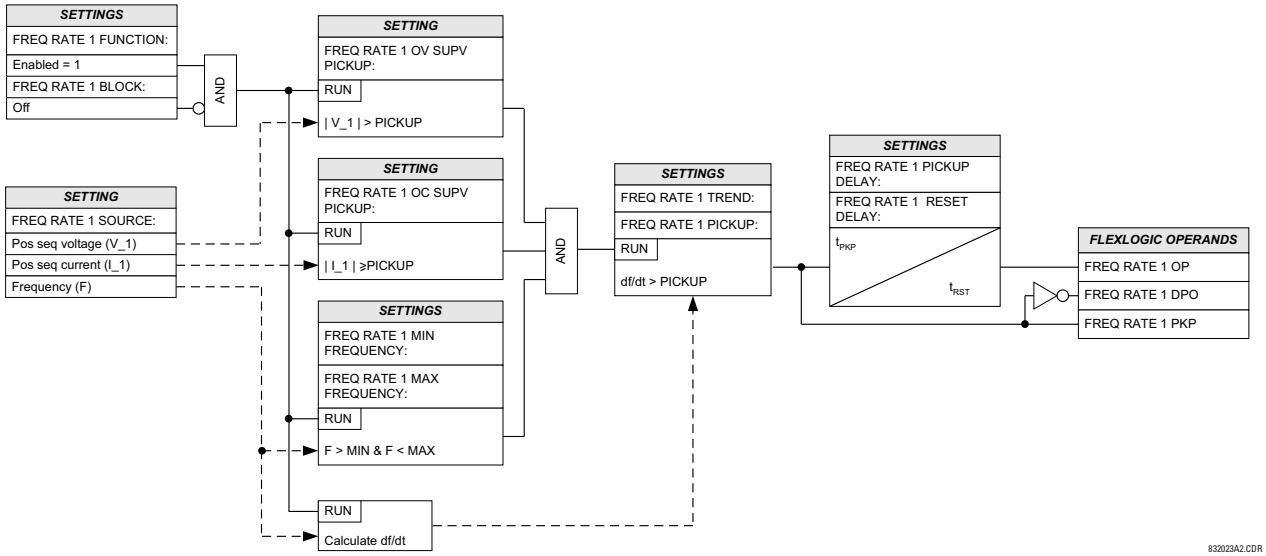

5.9.12 Digitizers

SETTINGS ⇨⇩ CONTROL ELEMENTS ⇨⇩ DIGITIZERS ⇨⇩ DIGITIZER 1(5)

■ DIGITIZER 1 ■	⇔	DIGITIZER 1 FUNCTION: Disabled	Range: Disabled, Enabled
	⇩	DIGITIZER 1 SRC: Off	Range: Off, any FlexAnalog parameter
	⇧	DIGITIZER 1 LIMIT: 1.000 pu	Range: 0.050 to 90.000 pu in steps of 0.001

There are five digitizer elements. The digitizer truncates the input signal to user-specified symmetrical limits and digitizes the outcome with an eight-bit resolution. The following equations describe the basic operation of the element.

$$x_{truncated} = \begin{cases} -LIMIT, & \text{if } x < -LIMIT \\ LIMIT, & \text{if } x > LIMIT \\ x, & \text{otherwise} \end{cases} \qquad \textbf{Eq. 5-31}$$

$$N_{out} = \text{round}\left(\frac{x_{truncated}}{LIMIT} \times 127\right) \qquad \textbf{Eq. 5-32}$$

where

x is an input signal specified by the **DIGITIZER 1(5) SRC** setting
LIMIT is defined by the **DIGITIZER 1(5) LIMIT** setting
round is an operand that rounds up to the nearest integer
N_{out} is an integer output of the digitizer (from –127 to 127)

The figure illustrates the output characteristic of the digitizer element.

Figure 5-179: Digitizer output characteristic

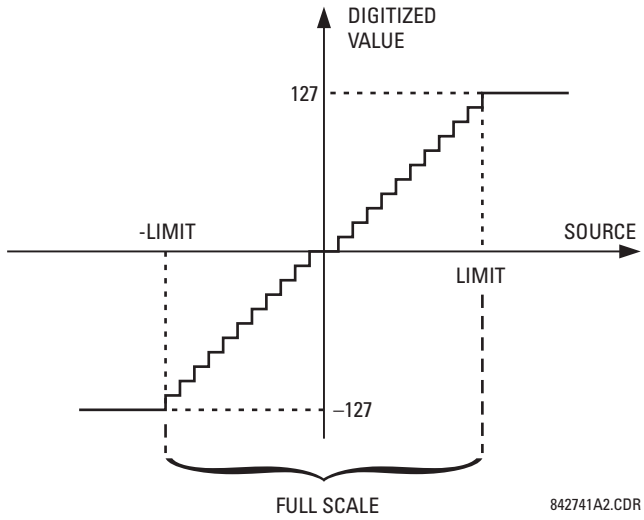

The output integer number is represented by eight FlexLogic operands encoding the input value per the following convention:

$$N_{out} = (-1)^{b_7} \times (2^6 b_6 + 2^5 b_5 + 2^4 b_4 + 2^3 b_3 + 2^2 b_2 + 2^1 b_1 + 2^0 b_0) \quad \textbf{Eq. 5-33}$$

The output operands can be configured to drive relay outputs, such as remote outputs, direct outputs, contact outputs, or any combination of these, in order to relay the analog quantity to other UR-series IEDs for further processing.

The digitizer averages the signal prior to digitization for increased accuracy. The extra filtering is in effect only under steady-state conditions or during slow changes of the input value. When the input signal changes significantly, the filtering is removed to maintain the response speed of the element.

For critical applications, ensure the validity of the digitizer input signal to prevent an undesired response of the relaying system. For example, configuring the VT fuse failure condition when the digitizer uses the voltage signal.

The digitized output value is available as an actual value for testing, troubleshooting, and special applications (see the **ACTUAL VALUES ⇨⇩ METERING ⇨⇩ DIGITIZERS** values for details).

DIGITIZER 1 SRC — This setting specifies an internal analog value to be digitized. A variety of analog actual values (FlexAnalog parameters) such as power, current amplitude, voltage amplitude, power factor, and so on, can be configured as the digitizer source. Refer to Appendix A for a complete list of FlexAnalog parameters available for the N60.

DIGITIZER 1 LIMIT— This setting allows setting symmetrical limits for the input signal. The input signal is truncated to an interval from –LIMIT to +LIMIT before the effective digitization. The base units are defined in the exact manner as FlexElements (see the FlexElements section for details).

Figure 5-180: Digitizer logic

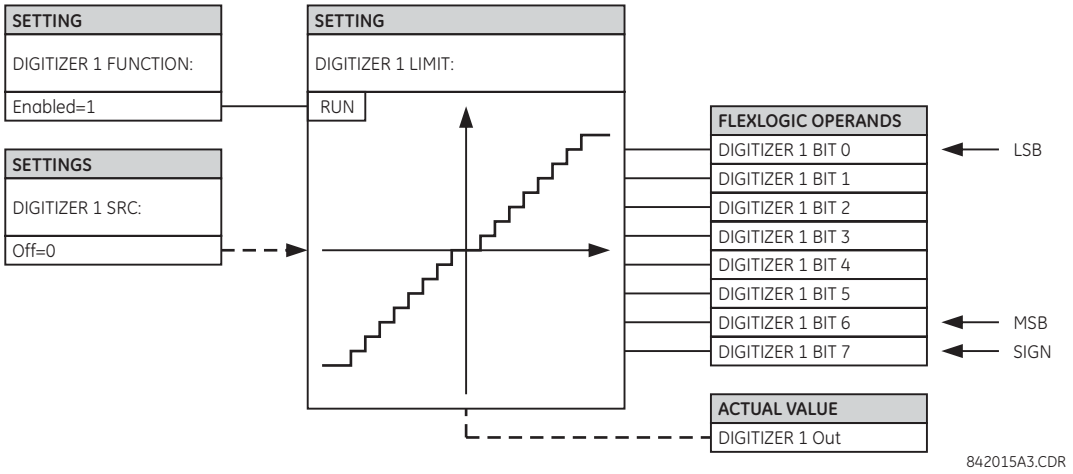

Application example 1

A three phase active power on a 13.8 kV system measured via UR source 1 is to be sent via Direct Outputs, bits 20 through 27, to a remote location. The following settings are applied on the relay: CT ratio = 1200:5, VT ratio = 120, and VT secondary = 66.4 V. The nominal current is 800 A primary and the nominal power factor is 0.90. The power is to be monitored in both importing and exporting directions and allow for 20% overload as compared with the nominal.

- Nominal three-phase power: $P = \sqrt{3} \times 13.8\ \text{kV} \times 0.8\ \text{kA} \times 0.9 = 17.21\ \text{MW}$
- Three-phase power with the 20% overload margin: $P_{max} = 1.2 \times 17.21\ \text{MW} = 20.65\ \text{MW}$
- UR base unit for power: P_{BASE} = VT ratio x VT secondary x CT primary = 120 x 66.4 V x 1.2 kA = 9.56 MW (see the FlexElements section for details)
- Maximum power to be monitored (pu): 20.65 MW/9.56 MW = 2.160 pu

The following settings are applied: **DIGITIZER 1 SRC** = “SRC 1 P" and **DIGITIZER 1 LIMIT** = “2.160 pu”.

Using these settings, the output represents power with the scale of 127 per 20.65 MW; for example, 1 count of a digitizer output represents 20.65 MW / 127 = 162.6 kW.

The direct outputs are configured as follows:

DIRECT OUT 20 OPERAND: “DIGITIZER 1 BIT 0”
DIRECT OUT 24 OPERAND: “DIGITIZER 1 BIT 4”
DIRECT OUT 21 OPERAND: “DIGITIZER 1 BIT 1”
DIRECT OUT 25 OPERAND: “DIGITIZER 1 BIT 5”
DIRECT OUT 22 OPERAND: “DIGITIZER 1 BIT 2”
DIRECT OUT 26 OPERAND: “DIGITIZER 1 BIT 6”
DIRECT OUT 23 OPERAND: “DIGITIZER 1 BIT 3”
DIRECT OUT 27 OPERAND: “DIGITIZER 1 BIT 7”

On the receiving location, bits 20 through 27 are configured to drive eight direct inputs. The latter is configured accordingly to use the incoming information (typically via the eight-bit comparator feature).

The following table illustrates this application for four sample power values.

Table 5-45: Sample power values

Power	N_{out}	B7... B0
15.00 MW	92	01011100
20.00 MW	123	01111011
–5.00 MW	–31	10011111
–12.00 MW	–74	11001010

Application example 2

The phase A current (true RMS value) is to be sent via remote outputs (MMS GOOSE) to several remote IEDs (DNA points 14 through 20). The CT ratio is 5000:5 and the maximum load current is 4200 A. The current should be monitored allowing for 50% overload.

- Phase current with the 50% overload margin: I_{max} = 1.5 x 4.2 kA = 6.3 kA
- UR base unit for current: I_{BASE} = 5 kA (see FlexElements section for further details)
- Minimum current to be monitored (pu): 6.3 kA/5 kA = 1.26 pu

The following settings are applied: **DIGITIZER 1 SRC** = "SRC 1 Ia RMS" and **DIGITIZER 1 LIMIT** = "1.260 pu"

Using these settings, the output represents current magnitude with the scale of 127 per 6.3 kA; for example, one count of a digitizer output represents 6.3 kA / 127 = 49.6 A.

The remote outputs are configured as follows:

DNA- 14 OPERAND: "DIGITIZER 1 BIT 0"
DNA- 18 OPERAND: "DIGITIZER 1 BIT 4"
DNA- 15 OPERAND: "DIGITIZER 1 BIT 1"
DNA- 19 OPERAND: "DIGITIZER 1 BIT 5"
DNA- 16 OPERAND: "DIGITIZER 1 BIT 2"
DNA- 20 OPERAND: "DIGITIZER 1 BIT 6"
DNA- 17 OPERAND: "DIGITIZER 1 BIT 3"

As the input signal (true RMS) is always positive, the sign bit can be ignored and only seven points need to be exchanged. On the receiving location, incoming bits 14 through 20 are configured to drive remote inputs. The latter together with the FlexLogic constant "Off" for the sign bit is configured accordingly to use the incoming information (typically via the eight-bit comparator feature).

The table illustrates this application for four sample current values.

Table 5-46: Sample current values

Current	N_{out}	B7... B0
1.00 kA	20	00010100
2.50 kA	50	00110010
4.20 kA	85	01010101
6.00 kA	121	01111001

5.9.13 8-bit comparators

SETTINGS ⇨⇩ CONTROL ELEMENTS ⇨⇩ 8-BIT COMPARATORS ⇨ 8-BIT COMPARATOR 1(6)

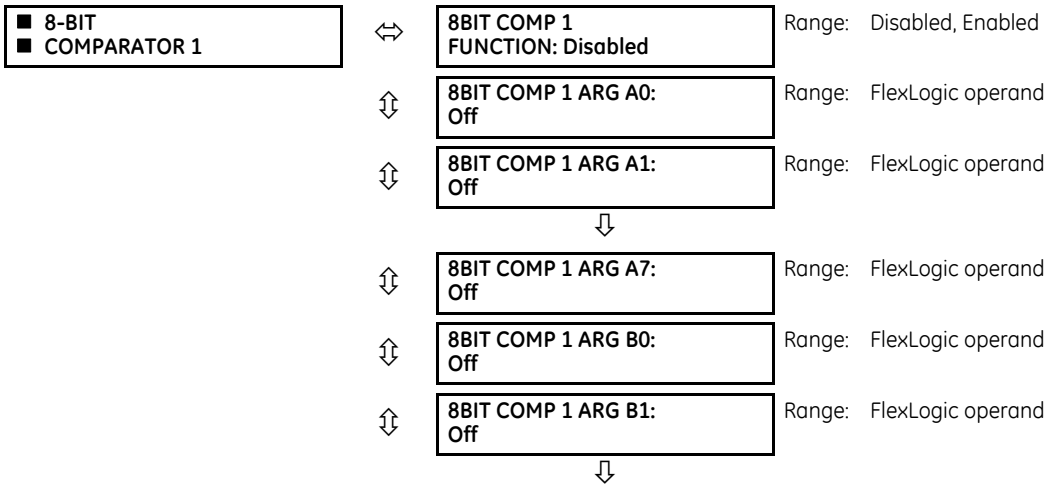

⇕	**8BIT COMP 1 ARG B7: Off**	Range: FlexLogic operand
⇕	**8BIT COMP 1 INPUT MODE: SIGNED**	Range: SIGNED, ABSOLUTE
⇕	**8BIT COMP 1 DIRECTION: OVER**	Range: OVER, UNDER
⇕	**8BIT COMP 1 ADD/SUB: Off**	Range: FlexLogic operand
⇕	**8BIT COMP 1 PICKUP: 10000.00**	Range: –25400.00 to 25400.00 in steps of 0.01
⇕	**8BIT COMP 1 HYSTERESIS: 500.00**	Range: 0 to 5000.00 in steps of 0.01
⇕	**8BIT COMP 1 PICKUP DELAY: 0.000 s**	Range: 0 to 65.353 s in steps of 0.001
⇕	**8BIT COMP 1 RESET DELAY: 0.000 s**	Range: 0 to 65.353 s in steps of 0.001
⇕	**8BIT COMP 1 SCALE FACTOR: 1.00**	Range: 0.01 to 100.00 in steps of 0.01
⇕	**8BIT COMP 1 BLOCK: Off**	Range: FlexLogic operand
⇕	**8BIT COMP 1 TARGET: Self-reset**	Range: Self-reset, Latched, Disabled
⇧	**8BIT COMP 1 EVENTS: Disabled**	Range: Disabled, Enabled

5

This feature allows simple manipulations on eight-bit numbers. In particular, two numbers can be added or subtracted depending on a user-programmable dynamic condition. User-programmable threshold, hysteresis, direction of comparison, pickup, and dropout time delays can be applied.

The two input arguments are user-configurable as collections of FlexLogic operands using the binary encoding convention. This allows bringing analog values from remote locations via communication-based inputs/outputs to facilitate telemetry and other advanced applications. The two values to be added or subtracted should have a common scaling and be of the same type. For example, adding voltage and current does not yield meaningful results.

This element is typically applied in conjunction with the digitizer feature.

8BIT COMP 1 ARG A0 to **8BIT COMP 1 ARG A7** — These settings specify FlexLogic operands that provide an eight-bit representation of the first argument, A, of the comparator. The **8BIT COMP 1 ARG A0** setting represents the least significant bit, while the **8BIT COMP 1 ARG A6** setting represents the most significant bit. The **8BIT COMP 1 ARG A7** setting represents the sign bit (asserted for negative values). In other words, the following convention is used:

$$A = (-1)^{a_7} \times (2^6 a_6 + 2^5 a_5 + 2^4 a_4 + 2^3 a_3 + 2^2 a_2 + 2^1 a_1 + 2^0 a_0) \quad \textbf{Eq. 5-34}$$

Care must be taken to avoid race conditions for the used bits (FlexLogic operands). If the eight bits are not changing simultaneously (for example, when some of the bits arrive via contact inputs and the others arrive via direct inputs), a race condition can occur, leading to severe over- or under-estimation of the resulting eight-bit number. For example, assume the integer value changes from 15 to 16, that is from 00001111 to 00010000, but transiently the A4 bit asserts before the A3 through A0 bits de-assert. As a result, a value of 00011111, or 31, is produced, resulting in almost 100% overestimation compared to a true value of 16.

To prevent problems, pickup and dropout time delays must be applied to avoid misoperation, or all eight bits must be configured to change simultaneously (for example, applied to the relay via the same communications).

BIT COMP 1 ARG B0 to **8BIT COMP 1 ARG B7** — These settings specify FlexLogic operands that provide an eight-bit representation of the second argument, B, of the comparator. The **8BIT COMP 1 ARG B0** setting represents the least significant bit, while the **8BIT COMP 1 ARG B6** setting represents the most significant bit. The **8BIT COMP 1 ARG B7** setting is the sign bit (asserted for negative values). In other words the following convention is used:

$$B = (-1)^{b_7} \times (2^6 b_6 + 2^5 b_5 + 2^4 b_4 + 2^3 b_3 + 2^2 b_2 + 2^1 b_1 + 2^0 b_0) \quad \textbf{Eq. 5-35}$$

8BIT COMP 1 INPUT MODE — This setting specifies whether a signed or absolute value is used for comparison with the pickup threshold. This setting applies to the effective operating signal (that is, either A – B or A + B) and not to the individual inputs. The following figure illustrates an effective operating characteristic resulting from this setting.

The **8BIT COMP 1 Out** actual value, as well as the 8BIT COMP1 BIT0 through 8BIT COMP1 BIT7 FlexLogic operands, are derived without reference to this setting.

8BIT COMP 1 DIRECTION — This setting specifies if the element operates if the effective operating signal is above ("Over") or below ("Under") the threshold as illustrated in the following figure.

Figure 5-181: Operating characteristics of the eight-bit comparator

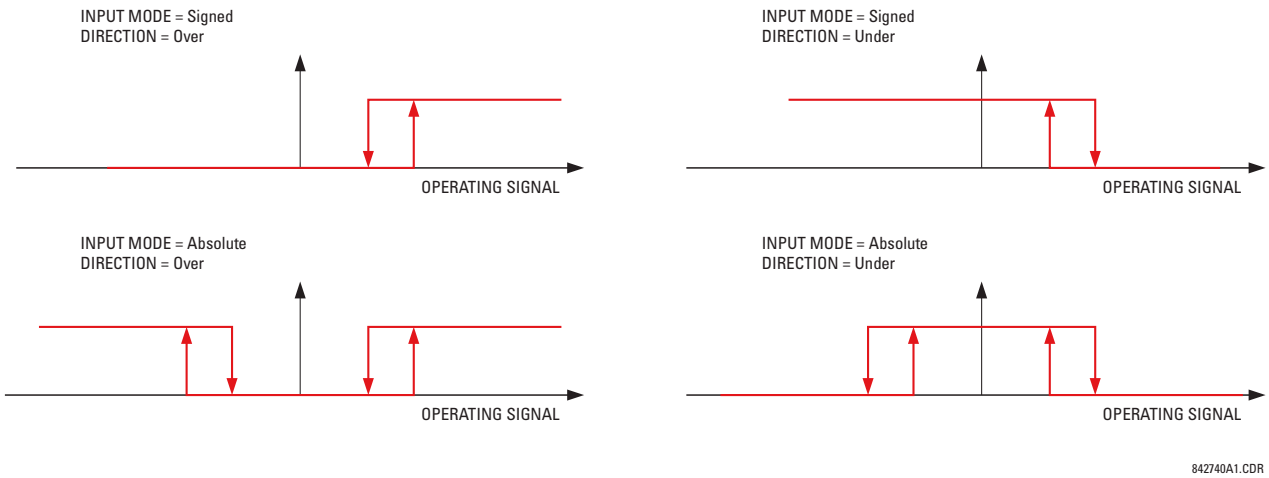

8BIT COMP 1 ADD/SUB — This setting specifies if the two arguments, A and B, are added or subtracted to form the effective operating signal. If the FlexLogic operand configured under this setting is logic 0 ("Off"), then the operating signal is A – B. If the FlexLogic operand configured under this setting is logic 1 ("On"), then the operating signal is A + B. The element switches between adding and subtracting instantly, without additional delay.

8BIT COMP 1 PICKUP — This setting specifies the pickup threshold for the comparator. This setting applies to the value scaled via the **8BIT COMP 1 SCALE FACTOR** setting.

8BIT COMP 1 HYSTERESIS — Specifies the width of hysteresis for the comparator. The following logic applies:

If **8BIT COMP 1 DIRECTION** = "Over", then Dropout := **8BIT COMP 1 PICKUP** – **8BIT COMP 1 HYSTERESIS**

If **8BIT COMP1 DIRECTION** = "Under", then Dropout := **8BIT COMP 1 PICKUP** + **8BIT COMP 1 HYSTERESIS**

8BIT COMP 1 PICKUP DELAY — Specifies a pickup time delay for the 8BIT COMP 1 OP FlexLogic operand.

8BIT COMP 1 RESET DELAY — Specifies a reset time delay for the 8BIT COMP 1 OP FlexLogic operand.

8BIT COMP 1 SCALE FACTOR — This setting allows re-scaling the two input arguments and the effective operating quantity. The same scaling factor applies to all three actual values: **8BIT COMP 1 A**, **8BIT COMP 1 B** and **8BIT COMP 1 Out**. The scaling enables easier application, testing, and troubleshooting. Also, it facilitates telemetry applications.

8BIT COMP 1 BLOCK — This setting specifies a FlexLogic operand for blocking the feature based on user-programmable conditions. When the blocking input is asserted, the element resets its timers, de-asserts the 8BIT COMP 1 PKP and 8BIT COMP1 OP operands (if asserted), clears self-reset targets, logs a 'blocked' event if Events are enabled, and becomes inactive. When unblocked, the element starts operating instantly. If exposed to pickup conditions for an extended period of time and unblocked, the element picks up and starts timing out at the moment of unblocking.

Typical applications of the **8BIT COMP 1 BLOCK** setting include conditions when the input signals are not reliable. For example, remote power can be digitized using the digitizer feature and sent via remote inputs/outputs to be used locally by the eight-bit comparator. The VT fuse fail at the remote location, or the **REMOTE DEVICE OFFLINE** indication can be used to block this element.

Figure 5-182: Eight-bit comparator logic

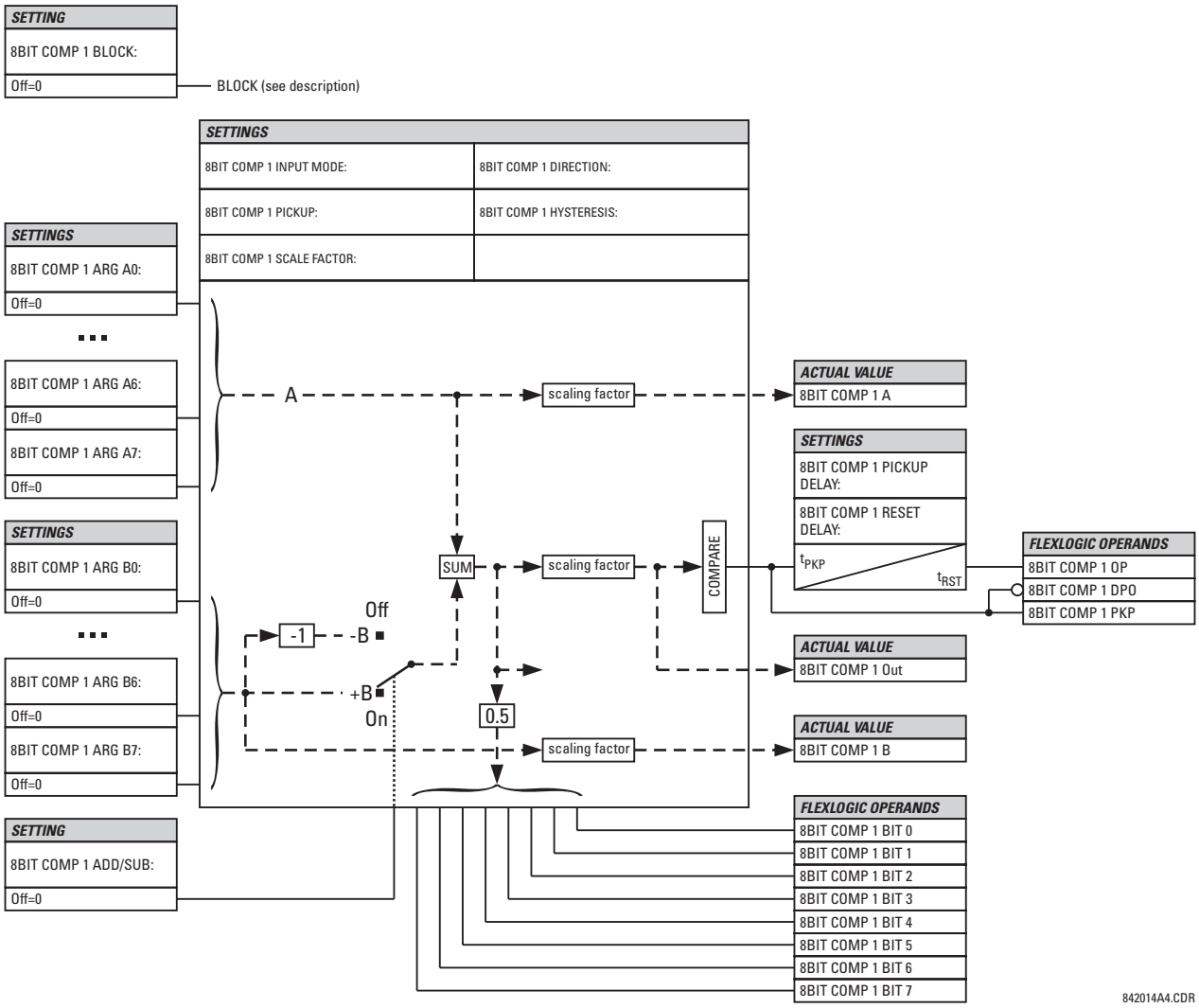

Application example

A three-phase active power measured via SRC 1 on the UR-1 IED is to be sent to a remote location UR-2 via the direct inputs/outputs feature. Upon reception the remote power is to be added to a three phase active power measured locally by the UR-2 IED via SRC 4. The application needs to be accurate under an overload of 25% and a power factor of 1.0 at either location. An alarm is to be established at the UR-2 location if the total power is above 2500 MW for 50 ms. The alarm is to be cleared if the power is below 2000 MW for 1 second.

The following settings and conditions are given.

- UR-1: Nominal system voltage = 345 kV, SRC 1 CT ratio = 2000:5, Normal load current = 1.8 kA
- UR-2: Nominal system voltage = 220 kV, SRC 4 CT ratio = 3000:5, Normal load current = 2.5 kA

The application requires the following features.

For UR-1:

Digitizer to prepare the measured power for sending to the UR-2 IED, and
direct outputs to send the digitized power to the UR-2 IED

For UR-2:

Digitizer to prepare the measured power for adding to the remote power,
direct inputs to receive the remote power from the UR-1 IED,
eight-bit comparator to sum the power values and apply a threshold, and
user-definable display messages for telemetry (optional)

The maximum active power at the UR-1 location is: $P = \sqrt{3} \times 345\ \text{kV} \times 1.25 \times 1.8\ \text{kA} \times 1.0 = 1345\ \text{MW}$

The maximum active power at the UR-2 location is: $P = \sqrt{3} \times 220\ \text{kV} \times 1.25 \times 2.5\ \text{kA} \times 1.0 = 1191\ \text{MW}$

For the two power values to be subsequently added, a common base must be selected for digitization. For this example, an arbitrary value of 1500 MW is selected as a base and maximum value for digitization. Consequently, one count of digitized power at either location is worth 1500 MW / 127 = 11.811 MW (see the Digitizers section in this chapter for details).

For the Digitizer at UR-1

1. UR base unit for power given by P_{BASE} = 345 kV x 2 kA = 690 MW (see the FlexElements section for details).
2. The maximum power to be monitored (in pu) given by 1500 MW/690 MW = 2.174 pu.
3. Apply the following settings:

   DIGITIZER 1 SOURCE: "SRC 1 P" and **DIGITIZER 1 LIMIT** = "2.174 pu"

For the Digitizer at UR-2

1. UR base unit for power given by P_{BASE} = 220 kV x 3 kA = 660 MW (see the FlexElements section for details).
2. The maximum power to be monitored (in pu) given by 1500 MW/660 MW = 2.273 pu.
3. Apply the following settings:

   DIGITIZER 1 SOURCE: "SRC 4 P" and **DIGITIZER 1 LIMIT** = "2.273 pu"

For the Direct Outputs at UR-1

1. Assume that UR-1 IED is labeled as direct device 1 (**DIRECT OUTPUT DEVICE ID** = "1").
2. Assume that bits 1 to 8 are used for sending the required power to the UR-2 IED. Apply the following settings:

   DIRECT OUT 1 OPERAND: "DIGITIZER 1 BIT 0"
   DIRECT OUT 5 OPERAND: "DIGITIZER 1 BIT 4"
   DIRECT OUT 2 OPERAND: "DIGITIZER 1 BIT 1"
   DIRECT OUT 6 OPERAND: "DIGITIZER 1 BIT 5"
   DIRECT OUT 3 OPERAND: "DIGITIZER 1 BIT 2"
   DIRECT OUT 7 OPERAND: "DIGITIZER 1 BIT 6"
   DIRECT OUT 4 OPERAND: "DIGITIZER 1 BIT 3"
   DIRECT OUT 8 OPERAND: "DIGITIZER 1 BIT 7"

For the Direct Inputs at UR-2

1. Apply the following settings (direct inputs 10 through 17 are used) to receive the digitized power from the UR-1 IED:

   DIRECT INPUT 10 DEVICE ID: "1"
   DIRECT INPUT 10 BIT NUMBER: "1"
   DIRECT INPUT 11 DEVICE ID: "1"
   DIRECT INPUT 11 BIT NUMBER: "2"
   DIRECT INPUT 12 DEVICE ID: "1"
   DIRECT INPUT 12 BIT NUMBER: "3"
   DIRECT INPUT 13 DEVICE ID: "1"
   DIRECT INPUT 13 BIT NUMBER: "4"
   DIRECT INPUT 14 DEVICE ID: "1"
   DIRECT INPUT 14 BIT NUMBER: "5"
   DIRECT INPUT 15 DEVICE ID: "1"

DIRECT INPUT 15 BIT NUMBER: "6"
DIRECT INPUT 16 DEVICE ID: "1"
DIRECT INPUT 16 BIT NUMBER: "7"
DIRECT INPUT 17 DEVICE ID: "1"
DIRECT INPUT 17 BIT NUMBER: "8"

2. The remote power is available as the DIRECT INPUT 10 On (the least significant bit) through DIRECT INPUT 16 On (the most significant bit) and DIRECT INPUT 17 On (the sign bit) FlexLogic operands.

For the 8-Bit Comparator at UR-2

1. Remote power from UR-1 IED received on direct inputs is the first argument for the comparator. As such, apply the following settings:

   8 BIT COMP 1 ARG A0: "DIRECT INPUT 1 On"
   8 BIT COMP 1 ARG A4: "DIRECT INPUT 5 On"
   8 BIT COMP 1 ARG A1: "DIRECT INPUT 2 On"
   8 BIT COMP 1 ARG A5: "DIRECT INPUT 6 On"
   8 BIT COMP 1 ARG A2: "DIRECT INPUT 3 On"
   8 BIT COMP 1 ARG A6: "DIRECT INPUT 7 On"
   8 BIT COMP 1 ARG A3: "DIRECT INPUT 4 On"
   8 BIT COMP 1 ARG A7: "DIRECT INPUT 8 On"

2. Local power from the UR-2 IED available internally is the second argument for the comparator. Thus, apply the following settings:

   8 BIT COMP 1 ARG B0: "DIGITIZER 1 BIT 0"
   8 BIT COMP 1 ARG B4: "DIGITIZER 1 BIT 4"
   8 BIT COMP 1 ARG B1: "DIGITIZER 1 BIT 1"
   8 BIT COMP 1 ARG B5: "DIGITIZER 1 BIT 5"
   8 BIT COMP 1 ARG B2: "DIGITIZER 1 BIT 2"
   8 BIT COMP 1 ARG B6: "DIGITIZER 1 BIT 6"
   8 BIT COMP 1 ARG B3: "DIGITIZER 1 BIT 3"
   8 BIT COMP 1 ARG B7: "DIGITIZER 1 BIT 7"

3. The two power values are to be added, therefore set **8BIT COMP 1 ADD/SUB** to "On".
4. To establish the alarm when the total power in either direction (import or export) is above the threshold, set **8BIT COMP 1 INPUT MODE** to "Absolute."
5. To establish the alarm when the total power is above the threshold, set the **8BIT COMP 1 DIRECTION** to "Over."
6. The digitized power values are scaled to meaningful values. Assuming that MW are to be used for comparison and display, set **8BIT COMP 1 SCALE FACTOR** to "11.81". In this way, the **8BIT COMP 1 A**, **8BIT COMP 1 B**, and **8BIT COMP 1 Out** actual values represent the remote (UR-1), local (UR-2), and total power values in MW.
7. To set the alarm when the total power is greater than 2500 MW, set **8BIT COMP 1 PICKUP** to "2500.00".
8. To clear the alarm when the total power is less than 2000 MW, the hysteresis setting needs to be at 2500 – 2000 = 500 MW. So set **8BIT COMP 1 HYSTERESIS** to "500".
9. Using the timing requirements, set **8BIT COMP 1 PICKUP DELAY** to "0.050" and **8BIT COMP 1 RESET DELAY** to "1.000". Use the 8BIT COMP 1 OP FlexLogic operand to set the alarm.
10. For monitoring and telemetry purposes, the digitized power values need to be scaled to meaningful values. Assuming MW to be displayed, set **8BIT COMP 1 SCALE FACTOR** to "11.81". In this way, the actual values **8BIT COMP 1 A**, **8BIT COMP 1 B** and **8BIT COMP 1 Out** represent the remote (UR-1), local (UR-2), and total power values in MW.

For the User-definable displays at UR-2 (optional)

To display the remote and total power values the following screen can be set up:

DISP 1 TOP LINE: "REMOTE MW: ~"
DISP 1 BOTTOM LINE: "TOTAL MW: ~"
DISP 1 ITEM 1: "8100" (Modbus register address of **8BIT COMP 1 A**)
DISP 1 ITEM 2: "8104" (Modbus register address of **8BIT COMP 1 Out**)

Analysis of metering errors at UR-2

The remote and local power values are measured with the maximum error of ±1% of reading (at power factors above 0.8). The digitization (round up) error is 0.2% of full scale, or 0.002 x 2 x 1500 MW = 6 MW. Consequently,

- Remote power is measured at UR-2 with a worst-case error of ± (1% of reading + 6 MW)
- Total power is measured at UR-2 with a worst-case error of ± (1% of UR-1 reading + 1% of UR-2 reading + 12 MW)

For example, with a reading of 1020 MW at UR-1 and 800 MW at UR-2, the remote power is measured at UR-2 with the worst-case error of ±(0.01 x 1020 MW + 6 MW) = ±16.2 MW, or ±1.6%. The reading for remote power at UR-2 is the product of the digitized value sent from UR-1 and received at UR-2 and the scale factor setting. That is,

$$\text{Total Power at UR-1} = \left(\text{round}\left(\frac{1020\ \text{MW}}{1500\ \text{MW}}\right) \times 127\right) \times 11.81\ \text{MW}$$
$$= 86 \times 11.81\ \text{MW} = 1015.7\ \text{MW} \qquad \textbf{Eq. 5-36}$$

Therefore, the reading for the remote power at UR-2 is 1015.7 MW, versus 1020 MW at the point of origin (UR-1).

The total power is measured at UR-2 with the worst-case error of ± (0.01 x 1020 MW + 0.01 x 800 MW + 12 MW) = ±30.2MW, or ±1.7%. The reading for the total power at UR-2 is the sum of the digitized value sent from UR-1 and received at UR-2 and the digitized value at UR-2 multiplied by the scaling factor. That is,

$$\text{Total Power at UR-2} = \left(\text{round}\left(\frac{1020\ \text{MW}}{1500\ \text{MW}} \times 127\right) + \text{round}\left(\frac{800\ \text{MW}}{1500\ \text{MW}} \times 127\right)\right) \times 11.81\ \text{MW}$$
$$= (86 + 68) \times 11.81\ \text{MW} = 1818.7\ \text{MW} \qquad \textbf{Eq. 5-37}$$

Therefore, the reading for the total power at UR-2 is 1818.7 MW, versus a true total of 1020 MW + 800 MW = 1820 MW.

5.9.14 8-bit switches

SETTINGS ⇨⇩ CONTROL ELEMENTS ⇨⇩ 8-BIT SWITCHES ⇨⇩ 8-BIT SWITCH 1(6)

■ 8-BIT ■ SWITCH 1	⇔	8BIT SWITCH 1 FUNCTION: Disabled	Range: Disabled, Enabled
	⇩	8BIT SW 1 ARG A0: Off	Range: FlexLogic operand
	⇩	8BIT SW 1 ARG A1: Off	Range: FlexLogic operand
		⇩	
	⇩	8BIT SW 1 ARG A7: Off	Range: FlexLogic operand
	⇩	8BIT SW 1 ARG B0: Off	Range: FlexLogic operand
	⇩	8BIT SW 1 ARG B1: Off	Range: FlexLogic operand
		⇩	
	⇩	8BIT SW 1 ARG B7: Off	Range: FlexLogic operand
	⇧	8BIT SW 1 CONTROL: Off	Range: FlexLogic operand

This feature allows switching between two input arguments defined by 8 bits each. The bits are specified by FlexLogic operands. The feature could be viewed as an integrated two-position switch for 8 logic signals.

Typically this element is applied in conjunction with the Digitizer and 8-bit Comparator features.

The switch runs every half power cycle (every four protection passes).

8BIT SW 1 ARG A0 to 8BIT SW 1 ARG A7 — These settings specify FlexLogic operands that constitute the first (A) input of the switch. These operands are routed to the output operands if the control input is in the "Off" position.

BIT SW 1 ARG B0 to 8BIT SW 1 ARG B7 — These settings specify FlexLogic operands that constitute the second (B) input of the switch. These operands are routed to the output operands if the control input is in the "On" position.

8BIT SW 1 CONTROL — This setting specifies FlexLogic operands to control the routing between the A and B inputs of the switch. If the control operand is in the "Off" state, the first (A) input is switched to the output. If the control operand is in the "On" state, the second (B) input is switched to the output. The switching takes place instantaneously.

Figure 5-183: 8-bit switch logic

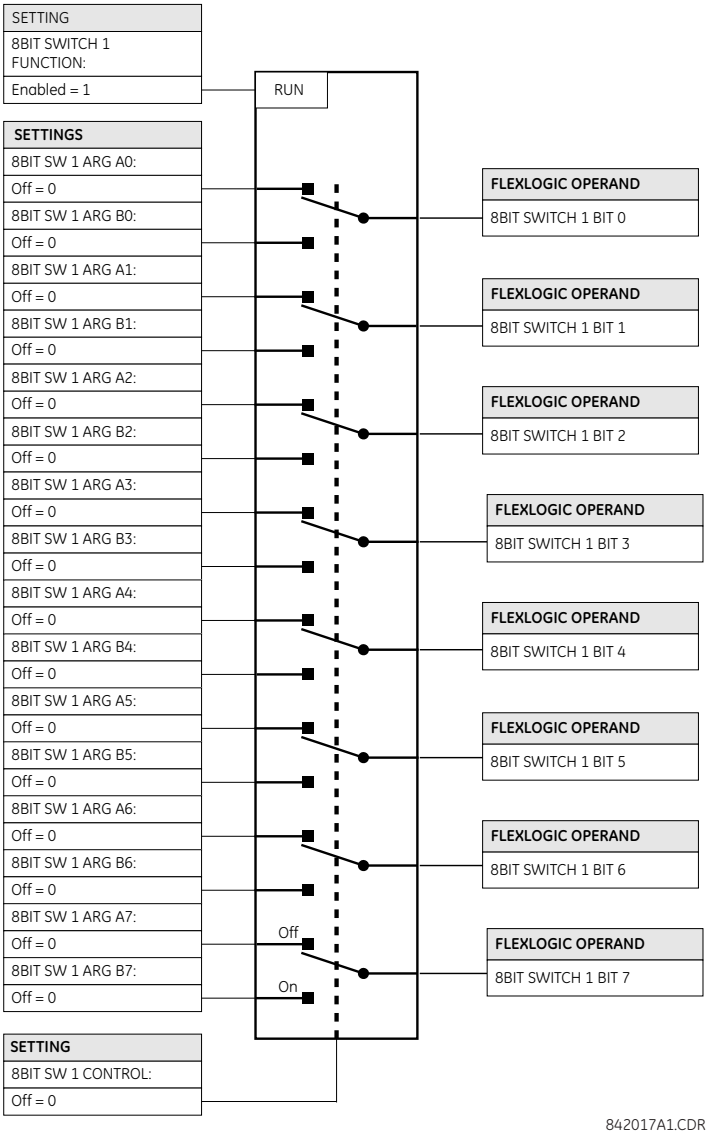

5.9.15 Multi-range signal oscillation detector (MSOD)

SETTINGS ⇨⇩ CONTROL ELEMENTS ⇨⇩ MULTI-RANGE SIGNAL OSCILL DETECTOR ⇨ MUTLI-RANGE SIGNAL OSCILL DETECTOR 1(6)

■ MULTI-RANGE SIGNAL ■ OSCILL DETECTOR 1	⇔	**MSOD 1 FUNCTION:** **Disabled**	Range: Disabled, Enabled

⇕	**MSOD 1 FREQ BAND:** **BAND 4**	Range: BAND 0, BAND 1, BAND 2, BAND 3, BAND 4
⇕	**MSOD 1 SOURCE:** **SRC1**	Range: SRC 1, SRC 2, SRC 3, SRC 4, SRC 5, SRC 6
⇕	**MSOD 1 INPUT SIGNAL:** **Va**	Range: See table
⇕	**MSOD 1 LOW FREQ:** **35 Hz**	Range: See table
⇕	**MSOD 1 HIGH FREQ:** **45 Hz**	Range: See table
⇕	**MSOD 1 ALARM PKP:** **0.100 pu**	Range: 0.02 to 10.00 pu in steps of 0.01
⇕	**MSOD 1 TRIP PKP:** **0.200 pu**	Range: 0.05 to 10.00 pu in steps of 0.01
⇕	**MSOD 1 DEADBAND:** **0.02 pu**	Range: 0.01 to 0.20 pu in steps of 0.01
⇕	**MSOD 1 ALARM DELAY:** **0.10 s**	Range: See table
⇕	**MSOD 1 TRIP DELAY:** **0.20 s**	Range: See table
⇕	**MSOD 1 DAMP R SUPV:** **Enabled**	Range: Enabled, Disabled
⇕	**MSOD 1 DAMP R LEVEL:** **2 %**	Range: 0% to 30.0% in steps of 0.1
⇕	**MSOD 1 OSC PHASE OFFSET:**	Range: -180.0 to 180.0 degrees in steps of 0.1
⇕	**MSOD 1 AVG CYCLES:** **5**	Range: 1 to 20 cycles in steps of 1
⇕	**MSOD 1 BLOCK:** **Off**	Range: FlexLogic operand
⇕	**MSOD 1 EVENTS:** **Disabled**	Range: Enabled, Disabled
⇧	**MSOD 1 TARGET:** **Disabled**	Range: Self-reset, Latched, Disabled

SOFTWARE OPTION

This feature is specified as an MSOD software option at time of ordering.

Six elements display with a Process Bus Module or HardFiber module, and otherwise up to six display.

The Multi-Range Signal Oscillation Detector (MSOD) is important for wind and solar farms because of oscillation in the system.

The settings ranges and default values vary by band selected, as outlined in the following table.

Table 5-47: Parameters for oscillation frequency detection bands

	Band 0		Band I		Band II		Band III		Band IV	
	Range	**Default**	**Range**	**Default**	**Range**	**Default**	**Range**	**Default**	**Range**	**Default**
Input signal	Ia, Ib, Ic, Ig	Ia	Va Mag, Vb Mag, Vc Mag, V1 Mag, Vx Mag, Ia Mag, Ib Mag, Ic Mag, I1 Mag, IG Mag, P3, Q3, S3	V1 Mag	Va Mag, Vb Mag, Vc Mag, V1 Mag, Vx Mag, Ia Mag, Ib Mag, Ic Mag, I1 Mag, IG Mag, P3, Q3, S3	V1 Mag	Va Mag, Vb Mag, Vc Mag, V1 Mag, Vx Mag, Ia Mag, Ib Mag, Ic Mag, I1 Mag, IG Mag, P3, Q3, S3	V1 Mag	Va, Vb, Vc, Vx, Ia, Ib, Ic, Ig, V_{clarke}, I_{clarke}	Va
Low freq	---	---	0.01 to 0.10	0.03	0.10 to 1.00	0.30	1.00 to 10.00	3.00	10.0 to fnom-5	35.0
High freq	---	---	0.01 to 0.10	0.06	0.10 to 1.00	0.60	1.00 to 10.00	6.00	10.0 to fnom-5	45.0
Alarm delay	0.00 to 600.00	1.00	0.00 to 600.00	50.00	0.00 to 600.00	5	0.00 to 600.00	0.5	0.00 to 600.00	0.1
Trip delay	0.00 to 600.00	2.00	0.00 to 600.00	100.00	0.00 to 600.00	10	0.00 to 600.00	1	0.00 to 600.00	0.2
Averaging cycles	1 to 20	5	---	---	---	---	---	---	---	---
Sample rate and execution rate (60 Hz system)	3840 Hz down sampled to 480 Hz		480 Hz down sampled to 6 Hz		480 Hz down sampled to 60 Hz		480 Hz		384 0Hz down sampled to 480 Hz	
Sample rate and execution (50 Hz system)	3200 Hz down sampled to 400 Hz		400 Hz down sampled to 5Hz		400 Hz down sampled to 50 Hz		400 Hz		3200 Hz down sampled to 400 Hz	

MSOD 1 FREQ BAND — This setting selects the oscillation frequency band to be detected, BAND 0 (DC quantity), BAND I (0.01 to 0.1Hz), BAND II (0.1 to 1Hz), BAND III (1 to 10Hz), and BAND IV (10 to fnom-5 Hz).

Band 0 is designed to detect geomagnetic induced currents. It is only applicable if DC-coupled non-conventional instrument transformers (NCITs) are used (otherwise DC component cannot be measured as it does not pass through the line CTs or the internal CTs). Due to the nature of the DC signal, the only measurement provided for Band 0 is the magnitude; all other measurements are fixed to zero. Band 0 is applicable if process bus inputs are used.

MSOD 1 SOURCE — This setting identifies the signal source for the MSOD element.

MSOD 1 INPUT SIGNAL — This setting identifies the input signal to the MSOD element collected from the source specified.

MSOD 1 LOW FREQ — This setting selects the value of the lower frequency of frequency band of interest. If measured frequency is outside the frequency band of interest, neither the alarm output nor the trip output are given.

MSOD 1 HIGH FREQ — Same as for low frequency but for value of the higher frequency.

MSOD 1 ALARM PKP — This setting defines the pickup level for the alarm stage of the element. The oscillation magnitude is the oscillating signal magnitude in per unit that is calculated by full cycle Fourier based on the calculated oscillation frequency.

MSOD 1 TRIP PKP — Same as for alarm pickup but for trip stage of the element.

MSOD 1 DEADBAND — This setting defines the deadband of the measured analog signal. If signal is inside the deadband, then oscillation is not considered to be happening. When the signal is outside the deadband, then frequency of the oscillation signal is measured and the oscillation magnitude is calculated based on the measured oscillation frequency. A typical setting is at 0.25 of the alarm stage pickup setting.

Figure 5-184: Deadband

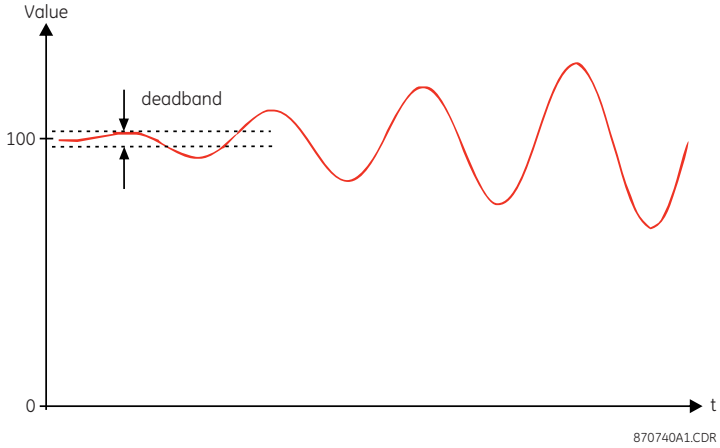

MSOD 1 ALARM DELAY — This setting specifies the pickup time delay of the alarm stage of the element.

MSOD 1 TRIP DELAY — This setting specifies the pickup time delay of the trip stage of the element.

MSOD 1 DAMP R SUPV — This setting enables or disables the damping ratio supervision.

MSOD 1 DAMP R LEVEL — This setting defines the oscillation damping ratio supervision level. A positive damping ratio means a damped oscillation (oscillation with decreasing amplitude), and a negative damping ratio causes a power oscillation with increasing amplitude (unstable oscillation). When the damping ratio supervision is enabled, MSOD is not permitted to operate if the calculated damping ratio is greater than this setting (DAMP R LEVEL) because such oscillation is considered a well-damped, stable oscillation. Operating time needs to be graded with the damping ratio setting to prevent maloperation due to the time it takes to calculate the actual damping ratio. When the **MSOD 1 DAMP R SUPV** setting is disabled, the **MSOD 1 DAMP R LEVEL** setting is inactive.

MSOD 1 OSC PHASE OFFSET — This setting defines the offset to oscillation phase angle (Phase_osc), which allows the user to calibrate the input source to offset the phase errors introduced by VTs, CTs, cabling or connections (such as polarity or vector group configurations). The setting value is added directly to the measured angles. Therefore, enter a positive correction when the secondary signal lags the true signal and a negative value when the secondary signal leads the true signal.

MSOD 1 AVG CYCLES — This setting defines the number of averaging cycles to be used in case of Band 0. The setting is visible/enabled if MSOD is configured as Band 0.

Figure 5-185: MSOD bands I to IV logic

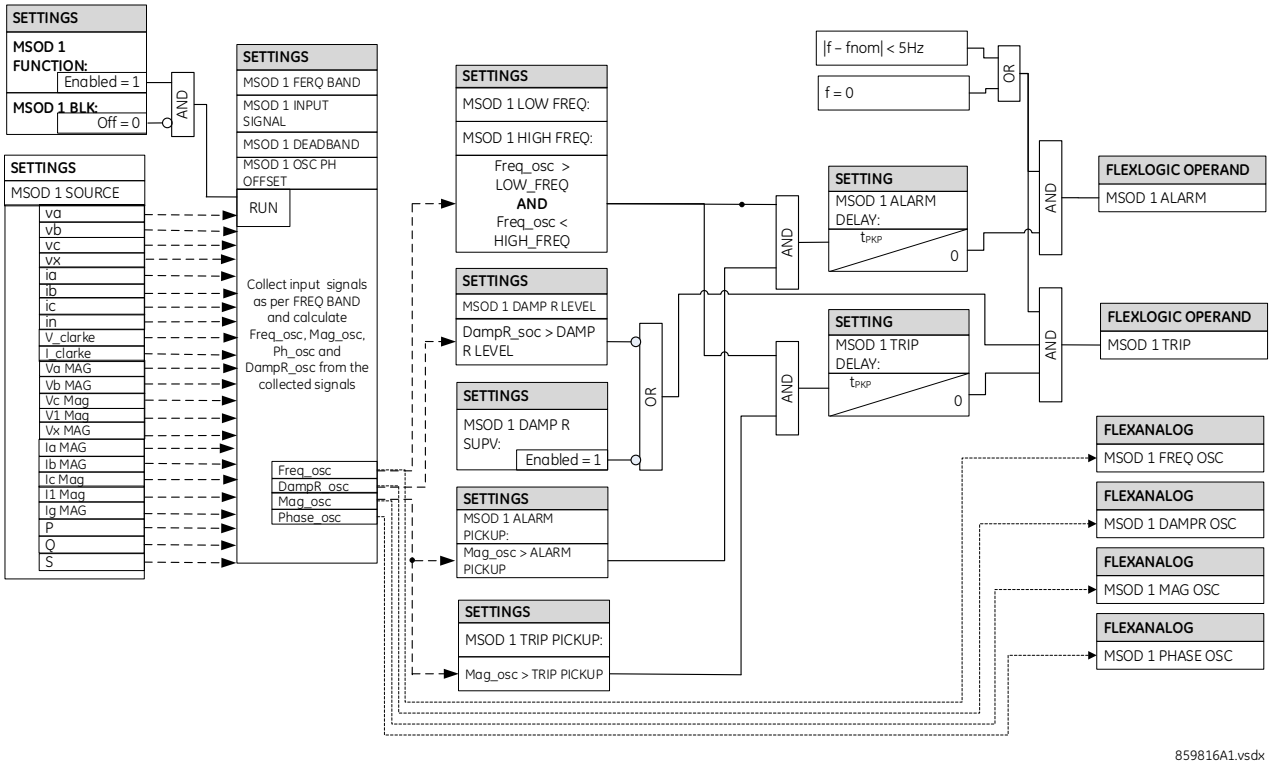

Figure 5-186: MSOD band 0 logic

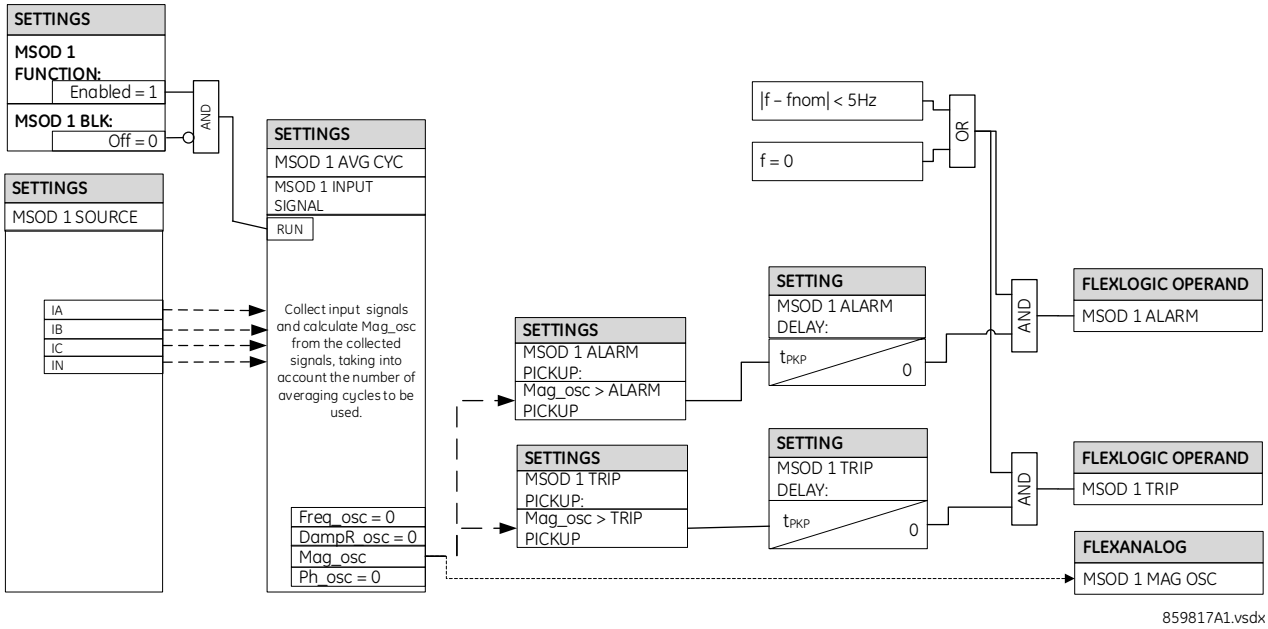

5.10 Inputs/outputs

5.10.1 Contact inputs

SETTINGS ⇨⇩ INPUTS / OUTPUTS ⇨ CONTACT INPUTS

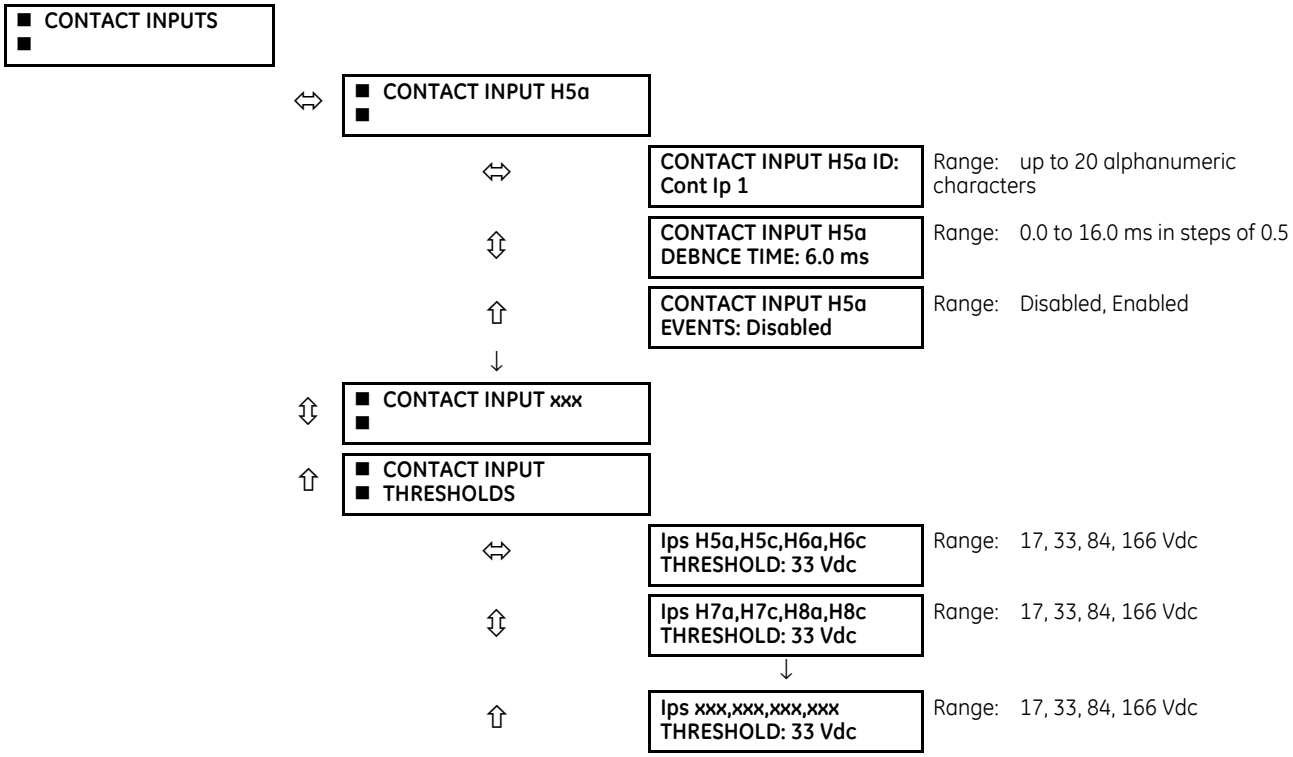

Contact inputs and outputs are digital signals associated with connections to hard-wired contacts. Wet and dry contacts are supported.

The contact inputs menu contains configuration settings for each contact input as well as voltage thresholds for each group of four contact inputs. Upon startup, the relay processor determines (from an assessment of the installed modules) which contact inputs are available and then display settings for only those inputs.

An alphanumeric ID can be assigned to a contact input for diagnostic, setting, and event recording purposes. The CONTACT IP X On (Logic 1) FlexLogic operand corresponds to contact input "X" being closed, while CONTACT IP X Off corresponds to contact input "X" being open. The **CONTACT INPUT DEBNCE TIME** defines the time required for the contact to overcome 'contact bouncing' conditions. As this time differs for different contact types and manufacturers, set it as a maximum contact debounce time (per manufacturer specifications) plus some margin to ensure proper operation. If **CONTACT INPUT EVENTS** is set to "Enabled," every change in the contact input state triggers an event.

A raw status is scanned for all Contact Inputs synchronously at the constant rate of 0.5 ms as shown in the following figure. The DC input voltage is compared to a user-settable threshold. A new contact input state must be maintained for a user-settable debounce time in order for the Product to validate the new contact state. In the following figure, the debounce time is set at 2.5 ms; thus the 6th sample in a row validates the change of state (mark no. 1 in the diagram). Once validated (de-bounced), the contact input asserts a corresponding FlexLogic operand and logs an event as per user setting.

A time stamp of the first sample in the sequence that validates the new state is used when logging the change of the contact input into the Event Recorder (mark no. 2 in the figure).

Protection and control elements, as well as FlexLogic equations and timers, are executed eight times in a power system cycle. The protection pass duration is controlled by the frequency tracking mechanism. The FlexLogic operand reflecting the debounced state of the contact is updated at the protection pass following the validation (marks no. 3 and 4 on the figure that follows). The update is performed at the beginning of the protection pass so all protection and control functions, as well as FlexLogic equations, are fed with the updated states of the contact inputs.

The FlexLogic operand response time to the contact input change is equal to the debounce time setting plus up to one protection pass (variable and depending on system frequency if frequency tracking enabled). If the change of state occurs just after a protection pass, the recognition is delayed until the subsequent protection pass; that is, by the entire duration of the protection pass. If the change occurs just prior to a protection pass, the state is recognized immediately. Statistically a delay of half the protection pass is expected. Owing to the 0.5 ms scan rate, the time resolution for the input contact is below 1 ms.

For example, eight protection passes per cycle on a 60 Hz system correspond to a protection pass every 2.1 ms. With a contact debounce time setting of 3.0 ms, the FlexLogic operand-assert time limits are: 3.0 + 0.0 = 3.0 ms and 3.0 + 2.1 = 5.1 ms. These time limits depend on how soon the protection pass runs after the debouncing time.

Regardless of the contact debounce time setting, the contact input event is time-stamped with a 1 ms accuracy using the time of the first scan corresponding to the new state (mark no. 2 shown). Therefore, the time stamp reflects a change in the DC voltage across the contact input terminals that was not accidental as it was subsequently validated using the debounce timer. Keep in mind that the associated FlexLogic operand is asserted/de-asserted later, after validating the change.

The debounce algorithm is symmetrical: the same procedure and debounce time are used to filter the LOW-HIGH (marks no.1, 2, 3, and 4 in the figure) and HIGH-LOW (marks no. 5, 6, 7, and 8) transitions.

Figure 5-187: Input contact debouncing mechanism and time stamp sample timing

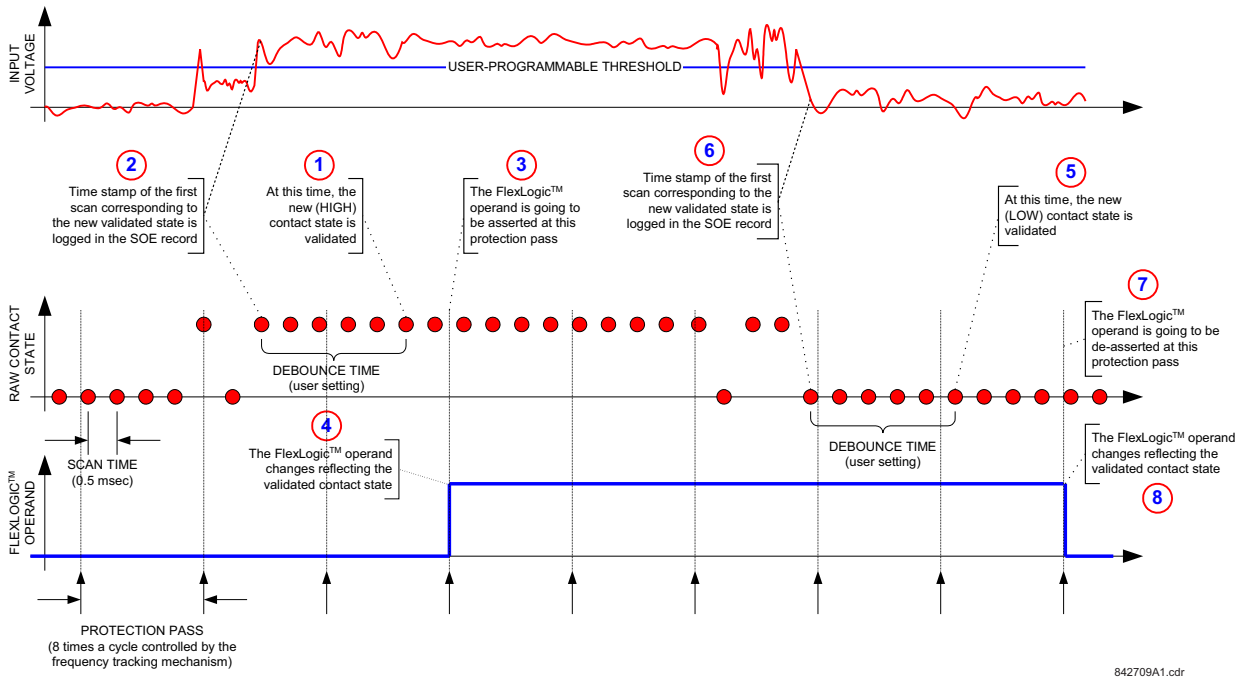

Contact inputs are isolated in groups of four to allow connection of wet contacts from different voltage sources for each group. The **CONTACT INPUT THRESHOLDS** determine the minimum voltage required to detect a closed contact input. This value is selected according to the following criteria: 17 for 24 V sources, 33 for 48 V sources, 84 for 110 to 125 V sources and 166 for 250 V sources.

For example, to use contact input H5a as a status input from the breaker 52b contact to seal-in the trip relay and record it in the Event Records menu, make the following settings changes:

CONTACT INPUT H5a ID: "Breaker Closed (52b)"
CONTACT INPUT H5a EVENTS: "Enabled"

Note that the 52b contact is closed when the breaker is open and open when the breaker is closed.

5.10.2 Virtual inputs

SETTINGS ⇨⇩ INPUTS/OUTPUTS ⇨⇩ VIRTUAL INPUTS ⇨ VIRTUAL INPUT 1(128)

■ VIRTUAL INPUT 1 ■	⇔	VIRTUAL INPUT 1 FUNCTION: Disabled	Range: Disabled, Enabled
	⇩	VIRTUAL INPUT 1 ID: Virt Ip 1	Range: up to 20 alphanumeric characters
	⇩	VIRTUAL INPUT 1 TYPE: Latched	Range: Self-Reset, Latched
	⇧	VIRTUAL INPUT 1 EVENTS: Disabled	Range: Disabled, Enabled

The virtual inputs and outputs are digital signals associated with UR-series internal logic signals. Virtual inputs include signals generated by the local user interface. The virtual outputs are outputs of FlexLogic equations used to customize the device. Virtual outputs can also serve as virtual inputs to FlexLogic equations.

The virtual inputs can be individually programmed to respond to input signals from the keypad (via the **COMMANDS** menu) and communications protocols. All virtual input operands are defaulted to "Off" (logic 0) unless the appropriate input signal is received.

If the **VIRTUAL INPUT x FUNCTION** is to "Disabled," the input is forced to off (logic 0) regardless of any attempt to alter the input. If set to "Enabled," the input operates as shown on the logic diagram and generates output FlexLogic operands in response to received input signals and the applied settings.

There are two types of operation: self-reset and latched. If **VIRTUAL INPUT x type** is "Self-Reset," when the input signal transits from off to on, the output operand is set to on for only one evaluation of the FlexLogic equations and then return to off. If set to "Latched," the virtual input sets the state of the output operand to the same state as the most recent received input.

The self-reset operating mode generates the output operand for a single evaluation of the FlexLogic equations. If the operand is to be used anywhere other than internally in a FlexLogic equation, it likely needs to be lengthened in time. A FlexLogic timer with a delayed reset can perform this function.

Figure 5-188: Virtual inputs logic

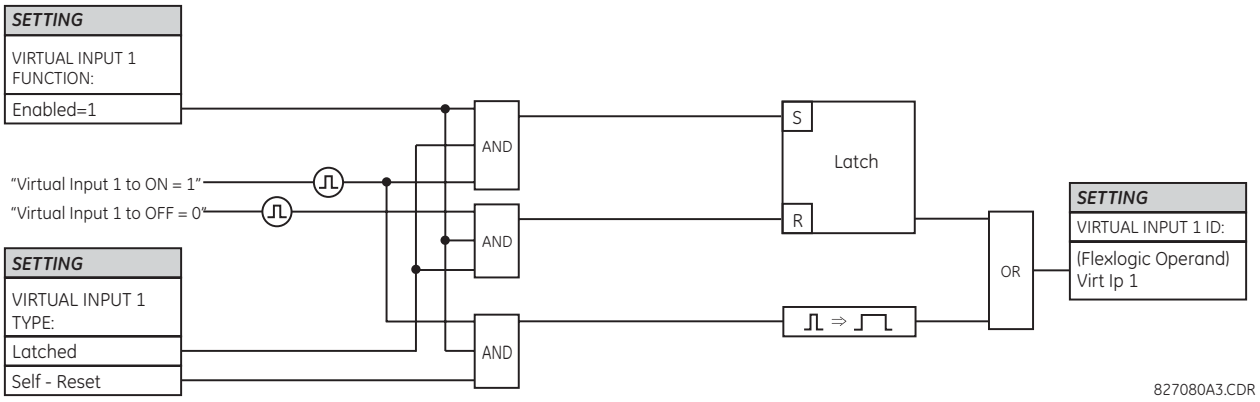

5.10.3 Contact outputs

5.10.3.1 Digital outputs

SETTINGS ⇨⇩ INPUTS/OUTPUTS ⇨⇩ CONTACT OUTPUTS ⇨⇩ CONTACT OUTPUT H1(H72)

■ CONTACT OUTPUT H1 ■	⇔	CONTACT OUTPUT H1 ID Cont Op 1	Range: up to 20 alphanumeric characters
	⇩	OUTPUT H1 OPERATE: Off	Range: FlexLogic operand
	⇩	OUTPUT H1 SEAL-IN: Off	Range: FlexLogic operand
	⇧	CONTACT OUTPUT H1 EVENTS: Enabled	Range: Disabled, Enabled

A contact inputs and outputs are digital signals associated with connections to hard-wired contacts. Wet and dry contacts are supported.

Upon startup of the relay, the main processor determines from an assessment of the modules installed in the chassis which contact outputs are available and then presents the settings for only these outputs. Where the contact input is non-latching, the settings are as shown.

An ID can be assigned to each contact output. The signal that can OPERATE a contact output can be any FlexLogic operand (virtual output, element state, contact input, or virtual input). An additional FlexLogic operand can be used to SEAL-IN the relay. Any change of state of a contact output can be logged as an Event if programmed to do so.

5

For example, the trip circuit current is monitored by providing a current threshold detector in series with some Form-A contacts (see the trip circuit example in the Digital Elements section). The monitor sets a flag (see the specifications for Form-A). The name of the FlexLogic operand set by the monitor, consists of the output relay designation, followed by the name of the flag; for example, Cont OP 1 IOn.

In most breaker control circuits, the trip coil is connected in series with a breaker auxiliary contact used to interrupt current flow after the breaker has tripped, to prevent damage to the less robust initiating contact. This can be done by monitoring an auxiliary contact on the breaker which opens when the breaker has tripped, but this scheme is subject to incorrect operation caused by differences in timing between breaker auxiliary contact change-of-state and interruption of current in the trip circuit. The most dependable protection of the initiating contact is provided by directly measuring current in the tripping circuit, and using this parameter to control resetting of the initiating relay. This scheme is often called trip seal-in.

This can be realized using the Cont OP 1 IOn FlexLogic operand to seal-in the contact output as follows:

CONTACT OUTPUT H1 ID: "Cont Op 1"
OUTPUT H1 OPERATE: any suitable FlexLogic operand
OUTPUT H1 SEAL-IN: "Cont Op 1 IOn"
CONTACT OUTPUT H1 EVENTS: "Enabled"

Figure 5-189: Contact input/output module type 6A contact 1 logic

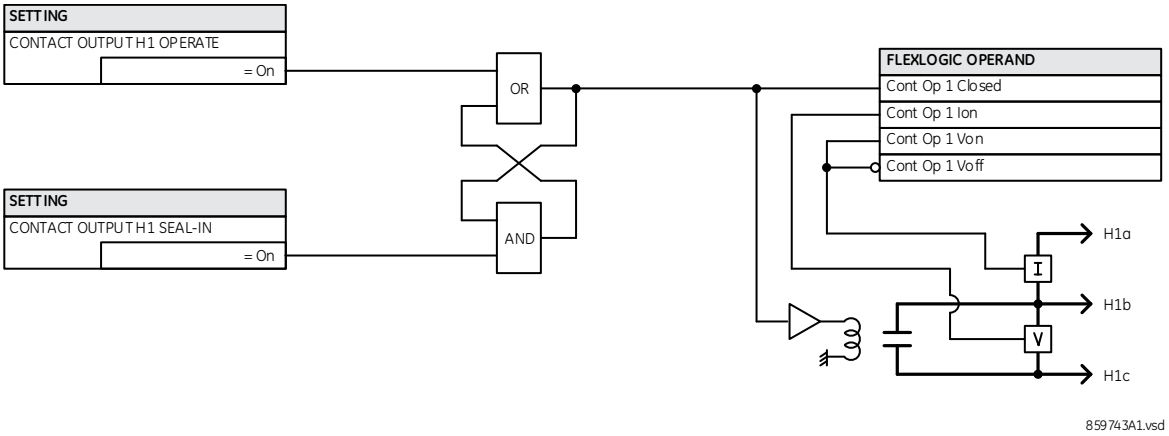

5.10.3.2 Latching outputs

SETTINGS ⇨⇩ INPUTS/OUTPUTS ⇨⇩ CONTACT OUTPUTS ⇨ CONTACT OUTPUT H1a

■ **CONTACT OUTPUT H1a** ■	⇔	**CONTACT OUTPUT H1a ID L-Cont Op 1**	Range: up to 20 alphanumeric characters
	⇩	**OUTPUT H1a OPERATE: Off**	Range: FlexLogic operand
	⇩	**OUTPUT H1a RESET: Off**	Range: FlexLogic operand
	⇩	**OUTPUT H1a SEAL-IN: Off**	Range: FlexLogic operand
	⇩	**OUTPUT H1a TYPE: Operate-dominant**	Range: Operate-dominant, Reset-dominant
	⇩	**CONTACT OUTPUT H1a EVENTS: Disabled**	Range: Disabled, Enabled

The latching output contacts are mechanically bi-stable and controlled by two separate (open and close) coils. As such they retain their position even if the relay is not powered up. The relay recognizes all latching output contact cards and populates the setting menu accordingly. On power up, the relay reads positions of the latching contacts from the hardware before executing any other functions of the relay (such as protection and control features or FlexLogic).

The latching output modules, either as part of the relay or as individual modules, are shipped from the factory with all latching contacts open. It is highly recommended to double-check the programming and positions of the latching contacts when replacing a module.

Since the relay asserts the output contact and reads back its position, it is possible to incorporate self-monitoring capabilities for the latching outputs. If any latching outputs exhibits a discrepancy, the LATCHING OUTPUT ERROR self-test error is declared. The error is signaled by the LATCHING OUT ERROR FlexLogic operand, event, and target message.

Settings shown use H1a as an example. The menu varies; not all fields shown display.

OUTPUT H1a OPERATE — This setting specifies a FlexLogic operand to operate the 'close coil' of the contact. The relay seals-in this input to safely close the contact. Once the contact is closed and the **RESET** input is logic 0 (off), any activity of the **OPERATE** input, such as subsequent chattering, does not have any effect. With both the **OPERATE** and **RESET** inputs active (logic 1), the response of the latching contact is specified by the **OUTPUT H1a TYPE** setting.

OUTPUT H1a RESET or SEAL-IN — This setting specifies a FlexLogic operand to operate the 'trip coil' of the contact. The relay seals-in this input to safely open the contact. Once the contact is opened and the **OPERATE** input is logic 0 (off), any activity of the **RESET** input, such as subsequent chattering, does not have any effect. With both the **OPERATE** and **RESET** inputs active (logic 1), the response of the latching contact is specified by the **OUTPUT H1a TYPE** setting.

OUTPUT H1a TYPE — This setting specifies the contact response under conflicting control inputs; that is, when both the **OPERATE** and **RESET** signals are applied. With both control inputs applied simultaneously, the contact closes if set to "Operate-dominant" and opens if set to "Reset-dominant."

Figure 5-190: Contact input/output module type 4L contact 1 logic

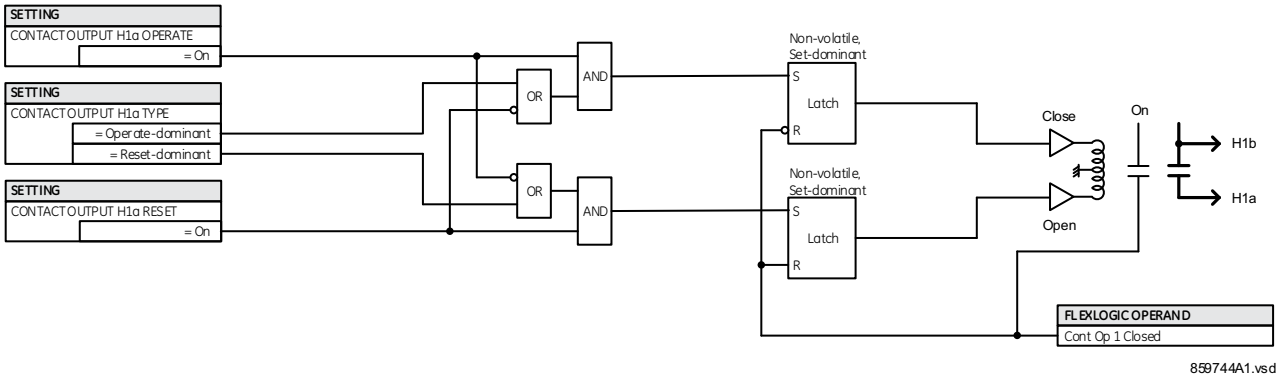

Application example 1

A latching output contact H1a is to be controlled from two user-programmable pushbuttons (buttons number 1 and 2). The following settings are applied.

Program the Latching Outputs by making the following changes in the **SETTINGS ⇨⇩ INPUTS/OUTPUTS ⇨⇩ CONTACT OUTPUTS ⇨ CONTACT OUTPUT H1a** menu (assuming an H4L module):

OUTPUT H1a OPERATE: "PUSHBUTTON 1 ON"
OUTPUT H1a RESET: "PUSHBUTTON 2 ON"

Program the pushbuttons by making the following changes in the **PRODUCT SETUP ⇨⇩ USER-PROGRAMMABLE PUSHBUTTONS ⇨⇩ USER PUSHBUTTON 1** and **USER PUSHBUTTON 2** menus:

PUSHBUTTON 1 FUNCTION: "Self-reset"
PUSHBTN 1 DROP-OUT TIME: "0.00 s"
PUSHBUTTON 2 FUNCTION: "Self-reset"
PUSHBTN 2 DROP-OUT TIME: "0.00 s"

Application example 2

A relay, having two latching contacts H1a and H1c, is to be programmed. The H1a contact is to be a Type-a contact, while the H1c contact is to be a Type-b contact (Type-a means closed after exercising the operate input; Type-b means closed after exercising the reset input). The relay is to be controlled from virtual outputs: VO1 to operate and VO2 to reset.

Program the Latching Outputs by making the following changes in the **SETTINGS ⇨⇩ INPUTS/OUTPUTS ⇨⇩ CONTACT OUTPUTS ⇨ CONTACT OUTPUT H1a** and **CONTACT OUTPUT H1c** menus (assuming an H4L module):

OUTPUT H1a OPERATE: "VO1"
OUTPUT H1a RESET: "VO2"
OUTPUT H1c OPERATE: "VO2"
OUTPUT H1c RESET: "VO1"

Since the two physical contacts in this example are mechanically separated and have individual control inputs, they do not operate at exactly the same time. A discrepancy in the range of a fraction of a maximum operating time can occur. Therefore, a pair of contacts programmed to be a multi-contact relay do not guarantee any specific sequence of operation (such as make before break). If required, the sequence of operation must be programmed explicitly by delaying some of the control inputs as shown in the next application example.

Application example 3

A make before break functionality must be added to the preceding example. An overlap of 20 ms is required to implement this functionality.

Write the following FlexLogic equation (EnerVista example shown).

FlexLogic Equation Editor // D60_490.urs : C:\Program Files\GE Multilin\EnerVist...

Save | Restore | Default

FLEXLOGIC ENTRY	TYPE	SYNTAX
View Graphic	View	View
FlexLogic Entry 1	Virtual Outputs On	Virt Op 1 On (VO1)
FlexLogic Entry 2	TIMER	Timer 1
FlexLogic Entry 3	Assign Virtual Output	= Virt Op 3 (VO3)
FlexLogic Entry 4	Virtual Outputs On	Virt Op 2 On (VO2)
FlexLogic Entry 5	TIMER	Timer 2
FlexLogic Entry 6	Assign Virtual Output	= Virt Op 4 (VO4)
FlexLogic Entry 7	End of List	

D60_490.urs FlexLogic

Set both timers (Timer 1 and Timer 2) to 20 ms pickup and 0 ms dropout.

Program the Latching Outputs by making the following changes in the **SETTINGS ⇨⇩ INPUTS/OUTPUTS ⇨⇩ CONTACT OUTPUTS ⇨ CONTACT OUTPUT H1a** and **CONTACT OUTPUT H1c** menus (assuming an H4L module):

OUTPUT H1a OPERATE: "VO1"
OUTPUT H1a RESET: "VO4"
OUTPUT H1c OPERATE: "VO2"
OUTPUT H1c RESET: "VO3"

Application example 4

A latching contact H1a is to be controlled from a single virtual output VO1. The contact is to remain closed as long as VO1 is high, and is to remain opened when VO1 is low. Program the relay as follows.

Write the following FlexLogic equation (EnerVista example shown).

FlexLogic Equation Editor // D60_490.urs : C:\Program Files\GE Multilin\EnerVist...

Save | Restore | Default | Reset

FLEXLOGIC ENTRY	TYPE	SYNTAX
View Graphic	View	View
FlexLogic Entry 1	Virtual Outputs On	Virt Op 1 On (VO1)
FlexLogic Entry 2	NOT	1 Input
FlexLogic Entry 3	Assign Virtual Output	= Virt Op 2 (VO2)
FlexLogic Entry 4	End of List	

D60_490.urs FlexLogic

Program the Latching Outputs by making the following changes in the **SETTINGS ⇨⇩ INPUTS/OUTPUTS ⇨⇩ CONTACT OUTPUTS ⇨ CONTACT OUTPUT H1a** menu (assuming an H4L module):

OUTPUT H1a OPERATE: "VO1"
OUTPUT H1a RESET: "VO2"

5.10.4 Virtual outputs

SETTINGS ⇨⇩ INPUTS/OUTPUTS ⇨⇩ VIRTUAL OUTPUTS ⇨ VIRTUAL OUTPUT 1(256)

■ **VIRTUAL OUTPUT 1** ■	⇔	**VIRTUAL OUTPUT 1 ID** **Virt Op 1**	Range: up to 20 alphanumeric characters
	⇧	**VIRTUAL OUTPUT 1** **EVENTS: Disabled**	Range: Disabled, Enabled

The virtual inputs and outputs are digital signals associated with UR-series internal logic signals. Virtual inputs include signals generated by the local user interface. The virtual outputs are outputs of FlexLogic equations used to customize the device. Virtual outputs can also serve as virtual inputs to FlexLogic equations.

The virtual outputs can be assigned using FlexLogic. If not assigned, the output is forced to 'OFF' (Logic 0). An ID also can be assigned to each virtual output. Virtual outputs are resolved in each pass through the evaluation of the FlexLogic equations. Any change of state of a virtual output can be logged as an event if programmed to do so.

For example, if Virtual Output 1 is the trip signal from FlexLogic and the trip relay is used to signal events, the settings is programmed as follows:

VIRTUAL OUTPUT 1 ID: "Trip"
VIRTUAL OUTPUT 1 EVENTS: "Disabled"

5.10.5 Resetting

5.10.5.1 Enhanced and basic front panels

SETTINGS ⇨⇩ INPUTS/OUTPUTS ⇨⇩ RESETTING

■ **RESETTING** ■	⇔	**RESET OPERAND:** **Off**	Range: FlexLogic operand

5.10.5.2 Graphical front panel

SETTINGS ⇨⇩ INPUTS/OUTPUTS ⇨⇩ RESETTING

■ **RESETTING** ■	⇔	**RESET OPERAND:** **Off**	Range: FlexLogic operand
	⇧	**RESET ANNUNCIATOR:** **Off**	Range: FlexLogic operand

Some events can be programmed to latch the front panel LED event indicators, target messages, and/or graphical front panel annunciator windows. Once set, the latching mechanism holds the latched indicators, messages, or windows in the set state after the initiating condition has cleared until a **RESET** command is received to return these latches (not including FlexLogic latches) to the reset state where the initiating condition has cleared. The **RESET** command can be sent from the front panel **RESET** button, a remote device via a communications channel, or any selected operand. The Modbus execute function 05h with operation code 1 command is also available to perform the same function as the front panel **RESET** key.

RESET OPERAND — The three sources of **RESET** commands each activates the RESET OP FlexLogic operand. Each individual source of a **RESET** command also activates its individual operand RESET OP (PUSHBUTTON), RESET OP (COMMS), or RESET OP (OPERAND) to identify the source of the command. Each of these three operands generates an event in the event record when activated. The **RESET OPERAND** setting here selects the operand that activates the RESET OP (OPERAND) operand.

RESET ANNUNCIATOR — Used to select a FlexLogic operand that when activated acknowledges/resets all annunciator windows on the graphical front panel. The other methods to acknowledge/reset annunciator windows include:

- On the displayed page, press the **RESET** pushbutton with none of the annunciator windows selected to acknowledge/reset all annunciator windows on that page
- To acknowledge/reset a specific annunciator window, use the Up, Down, Left and Right pushbuttons to select the window, and press the **RESET** or **ENTER** pushbutton
- All annunciator windows can be reset remotely by programming a Virtual Input (for example Virtual Input 1) as the input to the **RESET ANNUNCIATOR** setting. Then the Modbus execute function 05h with operation code 1000h command (or function 10h with address 400h) is used to set the state of Virtual Input 1.

For the **RESET ANNUNCIATOR** setting, the RESET ANCTR OP FlexLogic operand is activated by the two sources of **RESET** command, operand source and manual source. Each individual source of a **RESET ANNUNCIATOR** command also activates its individual operand RESET OP (OPRD) or RESET ANCTR OP (MNUL) to identify the source of the command. Each of

these two operands generates an event in the event record when activated. The setting here selects the operand that activates the RESET ANCTR OP (OPRD) operand. The **RESET** pushbutton on the front panel or the reset command from the software activates the RESET ANCTR OP (MNUL) operand.

5.10.6 Direct inputs and outputs

5.10.6.1 Direct inputs

SETTINGS ⇨⇩ INPUTS/OUTPUTS ⇨⇩ DIRECT INPUTS ⇨ DIRECT INPUT 1(64)

■ DIRECT INPUT 1 ■	⇔	DIRECT INPUT 1 NAME: Dir Ip 1	Range: up to 12 alphanumeric characters
	⇩	DIRECT INPUT 1 DEVICE ID: 0	Range: 0 to 16
	⇩	DIRECT INPUT 1 BIT NUMBER: 0	Range: 0 to 96
	⇩	DIRECT INPUT 1 DEFAULT: Off	Range: On, Off, Latest/On, Latest/Off
	⇧	DIRECT INPUT 1 EVENTS: Disabled	Range: Enabled, Disabled

These settings specify how the direct input information is processed.

DIRECT INPUT 1 NAME — This setting allows the user to assign a descriptive name to the direct input.

DIRECT INPUT 1 DEVICE ID — Represents the source of direct input 1. The specified direct input is driven by the device identified here.

DIRECT INPUT 1 BIT NUMBER — The bit number to extract the state for direct input 1. Direct Input 1 is driven by the bit identified as **DIRECT INPUT 1 BIT NUMBER**. This corresponds to the direct output number of the sending device.

DIRECT INPUT 1 DEFAULT STATE — Represents the state of the direct input when the associated direct device is offline. The following choices are available:

- On — Defaults the input to Logic 1
- Off — Defaults the input to Logic 0
- Latest/On — Freezes the input in case of lost communications. When the latest state is not known, such as after relay power-up but before the first communication exchange, the input defaults to Logic 1. When communication resumes, the input becomes fully operational.
- Latest/Off — Freezes the input in case of lost communications. When the latest state is not known, such as after relay power-up but before the first communication exchange, the input defaults to Logic 0. When communication resumes, the input becomes fully operational.

5.10.6.2 Direct outputs

SETTINGS ⇨⇩ INPUTS/OUTPUTS ⇨⇩ DIRECT OUTPUTS ⇨ DIRECT OUTPUT 1(64)

■ DIRECT OUTPUT 1 ■	⇔	DIR OUT 1 NAME: Dir Out 1	Range: up to 12 alphanumeric characters
	⇩	DIR OUT 1 OPERAND: Off	Range: FlexLogic operand
	⇧	DIRECT OUTPUT 1 EVENTS: Disabled	Range: Enabled, Disabled

DIR OUT 1 NAME — This setting allows the user to assign a descriptive name to the direct output.

DIR OUT 1 OPERAND — This sets the FlexLogic operand that determines the state of this direct output.

5.10.6.3 Application examples

The examples introduced in the earlier Direct Inputs and Outputs section (part of the Product Setup section) are continued here to illustrate usage of the direct inputs and outputs.

Example 1: Extending input/output capabilities of a UR relay

Consider an application that requires additional quantities of contact inputs or output contacts or lines of programmable logic that exceed the capabilities of a single UR-series chassis. The problem is solved by adding an extra UR-series IED, such as the C30, to satisfy the additional inputs/outputs and programmable logic requirements. The figure shows that two IEDs are connected via single-channel digital communication cards.

Figure 5-191: Input and output extension via direct inputs and outputs

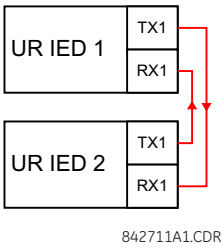

Assume that contact input 1 from UR IED 2 is to be used by UR IED 1. The following settings are applied (Direct Input 5 and bit number 12 are used, as an example).

UR IED 1:

DIRECT INPUT 5 DEVICE ID = "2"
DIRECT INPUT 5 BIT NUMBER = "12"

UR IED 2:

DIRECT OUT 12 OPERAND = "Cont Ip 1 On"

The Cont Ip 1 On operand of UR IED 2 is now available in UR IED 1 as DIRECT INPUT 5 ON.

Example 2: Interlocking busbar protection

A simple interlocking busbar protection scheme can be accomplished by sending a blocking signal from downstream devices, say 2, 3 and 4, to the upstream device that monitors a single incomer of the busbar, as shown in the figure.

Figure 5-192: Sample interlocking busbar protection scheme

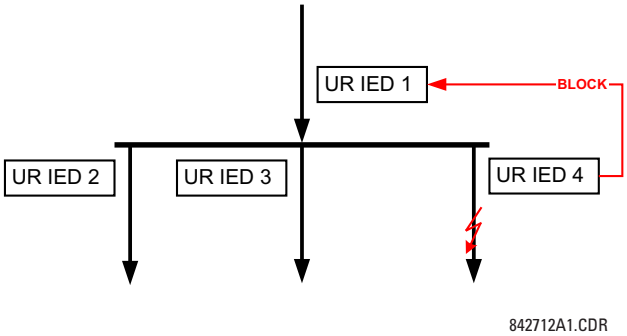

Assume that Phase Instantaneous Overcurrent 1 is used by Devices 2, 3, and 4 to block Device 1. If not blocked, Device 1 trips the bus upon detecting a fault and applying a short coordination time delay.

The following settings are applied (assume Bit 3 is used by all 3 devices to send the blocking signal and Direct Inputs 7, 8, and 9 are used by the receiving device to monitor the three blocking signals).

UR IED 2:

DIRECT OUT 3 OPERAND: "PHASE IOC1 OP"

UR IED 3:

DIRECT OUT 3 OPERAND: "PHASE IOC1 OP"

UR IED 4:

DIRECT OUT 3 OPERAND: "PHASE IOC1 OP"

UR IED 1:

DIRECT INPUT 7 DEVICE ID: "2"
DIRECT INPUT 7 BIT NUMBER: "3"
DIRECT INPUT 7 DEFAULT STATE: select "On" for security, select "Off" for dependability

DIRECT INPUT 8 DEVICE ID: "3"
DIRECT INPUT 8 BIT NUMBER: "3"
DIRECT INPUT 8 DEFAULT STATE: select "On" for security, select "Off" for dependability

DIRECT INPUT 9 DEVICE ID: "4"
DIRECT INPUT 9 BIT NUMBER: "3"
DIRECT INPUT 9 DEFAULT STATE: select "On" for security, select "Off" for dependability

Now the three blocking signals are available in UR IED 1 as DIRECT INPUT 7 ON, DIRECT INPUT 8 ON, and DIRECT INPUT 9 ON. Upon losing communications or a device, the scheme is inclined to block (if any default state is set to "On"), or to trip the bus on any overcurrent condition (all default states set to "Off").

Example 3: Pilot-aided schemes

Consider a three-terminal line protection application shown in the following figure.

Figure 5-193: Three-terminal line application

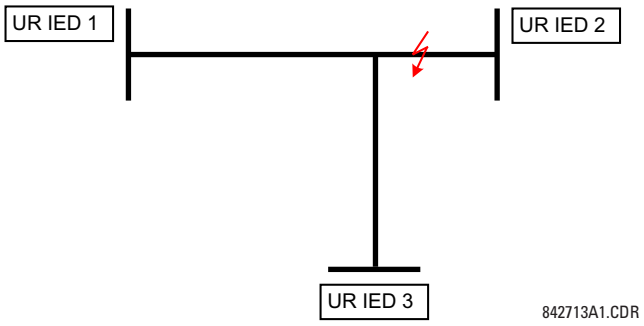

Assume the Hybrid Permissive Overreaching Transfer Trip (Hybrid POTT) scheme is applied using the architecture shown as follows. The scheme output operand HYB POTT TX1 is used to key the permission.

Figure 5-194: Single-channel open-loop configuration

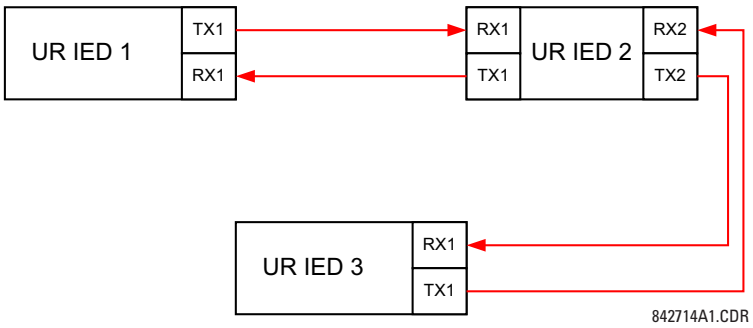

In this architecture, Devices 1 and 3 do not communicate directly. Therefore, Device 2 must act as a "bridge." The following settings are applied:

UR IEC 1:

DIRECT OUT 2 OPERAND: "HYB POTT TX1"
DIRECT INPUT 5 DEVICE ID: "2"
DIRECT INPUT 5 BIT NUMBER: "2" (this is a message from IED 2)
DIRECT INPUT 6 DEVICE ID: "2"
DIRECT INPUT 6 BIT NUMBER: "4" (effectively, this is a message from IED 3)

UR IED 3:

DIRECT OUT 2 OPERAND: "HYB POTT TX1"
DIRECT INPUT 5 DEVICE ID: "2"
DIRECT INPUT 5 BIT NUMBER: "2" (this is a message from IED 2)
DIRECT INPUT 6 DEVICE ID: "2"
DIRECT INPUT 6 BIT NUMBER: "3" (effectively, this is a message from IED 1)

UR IED 2:

DIRECT INPUT 5 DEVICE ID: "1"
DIRECT INPUT 5 BIT NUMBER: "2"
DIRECT INPUT 6 DEVICE ID: "3"
DIRECT INPUT 6 BIT NUMBER: "2"
DIRECT OUT 2 OPERAND: "HYB POTT TX1"
DIRECT OUT 3 OPERAND: "DIRECT INPUT 5" (forward a message from 1 to 3)
DIRECT OUT 4 OPERAND: "DIRECT INPUT 6" (forward a message from 3 to 1)

The figure shows the signal flow among the three IEDs.

Figure 5-195: Signal flow for direct input and output

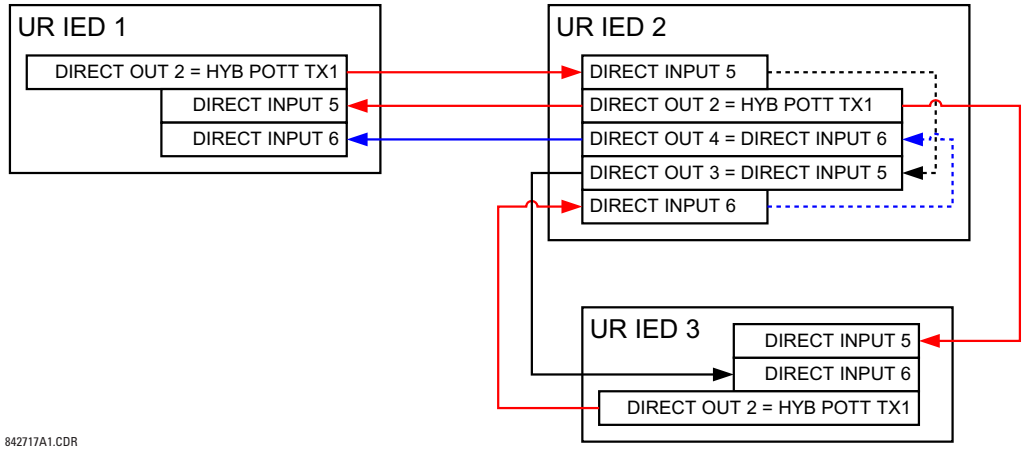

In three-terminal applications, both the remote terminals must grant permission to trip. Therefore, at each terminal, direct inputs 5 and 6 are ANDed in FlexLogic and the resulting operand configured as the permission to trip (**HYB POTT RX1** setting).

5.10.7 Direct analog inputs and outputs

5.10.7.1 Menu

SETTINGS ⇨ INPUTS/OUTPUTS ⇨⇩ DIRECT ANALOGS

■ DIRECT ANALOGS ■	⇔	■ DIRECT ANALOG ■ OUTPUTS	See below

⇧	■ DIRECT ANALOG ■ INPUTS	See page 5-379

The direct analogs feature allows the transmission of analog values between any two UR-series relays that support the feature. The communication channel is the same as that used for the direct inputs and outputs. When the direct inputs and outputs and direct analog features are used together on the same channel, all UR-series relays must be using firmware version 5.20 or higher.

Values are transmitted as unscaled floating point numbers. The units for these values are the base units of the FlexAnalog value (for example, volts, amperes, watts, vars, VA, and so on).

Transmission of values occurs once every 250 ms, defined as the integrity period. Deadband and FlexLogic trigger checks are performed once per power system cycle. Once a deadband or FlexLogic trigger occurs, the next transmission does not occur until the next 250 ms integrity time-out.

5.10.7.2 Direct analog outputs

SETTINGS ⇨⇩ INPUTS/OUTPUTS ⇨⇩ DIRECT ANALOGS ⇨ DIRECT ANALOG OUTPUTS ⇨ DIRECT ANALOG 1(32) OUTPUT

■ DIRECT ANALOG 1 ■ OUTPUT	⇔	ANALOG 1 VALUE: Off	Range: Off, any FlexAnalog parameter. See Appendix A for complete list.
	⇩	ANALOG 1 DEADBAND: 0.000	Range: 0.000 to 1000000000.000 in steps of 0.001
	⇧	ANALOG 1 TRIGGER: Off	Range: FlexLogic operand

The direct analog outputs share the direct input and output settings for device ID, data rate, ring configuration, and channel crossover.

ANALOG 1 VALUE — This setting selects the FlexAnalog parameter used to drive the associated direct analog output.

ANALOG 1 DEADBAND — This setting specifies the deadband value used to trigger transmission of the associated direct analog output. This value is stored as an IEEE 754 / IEC 60559 floating-point number. Because of the large range for this setting, not all values can be stored—some values can be rounded to the closest possible floating point number.

ANALOG 1 TRIGGER — This setting selects the FlexLogic operand used to trigger the transmission of the associated direct analog output. Transmission occurs on the rising edge of the operand. The operand must transition from 0 to 1 and remain at a value of 1 for at least one power system cycle to ensure detection of the rising edge and transmission of the associated direct analog output.

5.10.7.3 Direct analog inputs

SETTINGS ⇨⇩ INPUTS/OUTPUTS ⇨⇩ DIRECT ANALOGS ⇨ DIRECT ANALOG INPUTS ⇨ DIRECT ANALOG 1(32) INPUT

■ DIRECT ANALOG 1 ■ INPUT	⇔	DIRECT ANALOG 1 DEVICE: 0	Range: 0 to 16 in steps of 1
	⇩	DIRECT ANALOG 1 NUMBER: 0	Range: 0 to 32 in steps of 1
	⇩	ANALOG 1 DEFAULT: 1000.000	Range: –1000000000.000 to 1000000000.000 in steps of 0.001
	⇩	ANALOG 1 DEFAULT MODE: Default Value	Range: Default Value, Last Known
	⇩	DIRECT ANALOG 1 UNITS: unit	Range: up to four alphanumeric characters
	⇧	DIRECT ANALOG 1PU: 1	Range: 1 to 2000000 in steps of 1

The direct analogs feature allows the transmission of analog values between any two UR-series relays supporting the feature. The communication channel is the same as that used for the direct inputs and outputs feature. When the direct inputs/outputs and direct analog features are used together on the same channel, the UR-series relays must be using firmware version 5.20 or higher.

The settings for direct analog input 1 are as follows. The description applies to all 32 direct analog inputs.

DIRECT ANALOG 1 DEVICE ID — This value selects the source of the direct analog 1 input. Direct analog input 1 is driven by the device programmed in this setting.

DIRECT ANALOG 1 NUMBER — This value specifies which input to extract the value for the direct analog 1 input. Direct analog input 1 is driven by the input programmed in this setting. This setting value corresponds to the direct analog output number of the sending device.

DIRECT ANALOG 1 DEFAULT — This setting specifies the value of direct analog input 1 when the associated direct device is offline and the **DIRECT ANALOG 1 DEFAULT MODE** is set to "Default Value." When the associated direct device is offline and the default mode is set to "Last Known," the value of direct analog input 1 remains at the last received value. This value is stored as an IEEE 754 / IEC 60559 floating-point number. Because of the large range for this setting, not all values can be stored—some values can be rounded to the closest possible floating point number.

DIRECT ANALOG 1 UNITS — This setting provides a four-character string that is used in the direct analog input 1 actual values display.

DIRECT ANALOG 1 PU — This setting defines the per-unit base factor when using the DIRECT ANALOG INPUT 1 ACTUAL FlexAnalog value in other N60 features, such as FlexElements. This value is used to normalize the direct analog input 1 FlexAnalog quantity to its per-unit base. See the FlexElements section for additional details on per-unit base values.

5.10.7.4 Application example

5

Direct analog input FlexAnalog parameters (the DIR ANALOG INPUT 1 to DIR ANALOG INPUT 32 values) are available for use in other N60 functions that use FlexAnalog parameters.

The DIR ANA 1 INTEGRITY to DIR ANA 32 INTEGRITY, DIR ANA 1 DEADBAND to DIR ANA 32 DEADBAND, and DIR ANA 1 FORCED to DIR ANA 32 FORCED FlexLogic operands are provided to indicate the most recent trigger condition: Only one operand can be active (logic 1) at any time. If a direct device is offline, all of the associated trigger operands are inactive (logic 0).

The figure illustrates the operation of the direct analogs feature. In this example, UR-1 is configured to use four out of its 32 analog channels. These four values are selected from two sources. UR-2 is configured to receive two out of the four analog values sent, and UR-3 is set to receive three values. Note that SRC 2 FREQ is effectively being received at both UR-2 and UR-3.

Figure 5-196: Direct analogs sample application

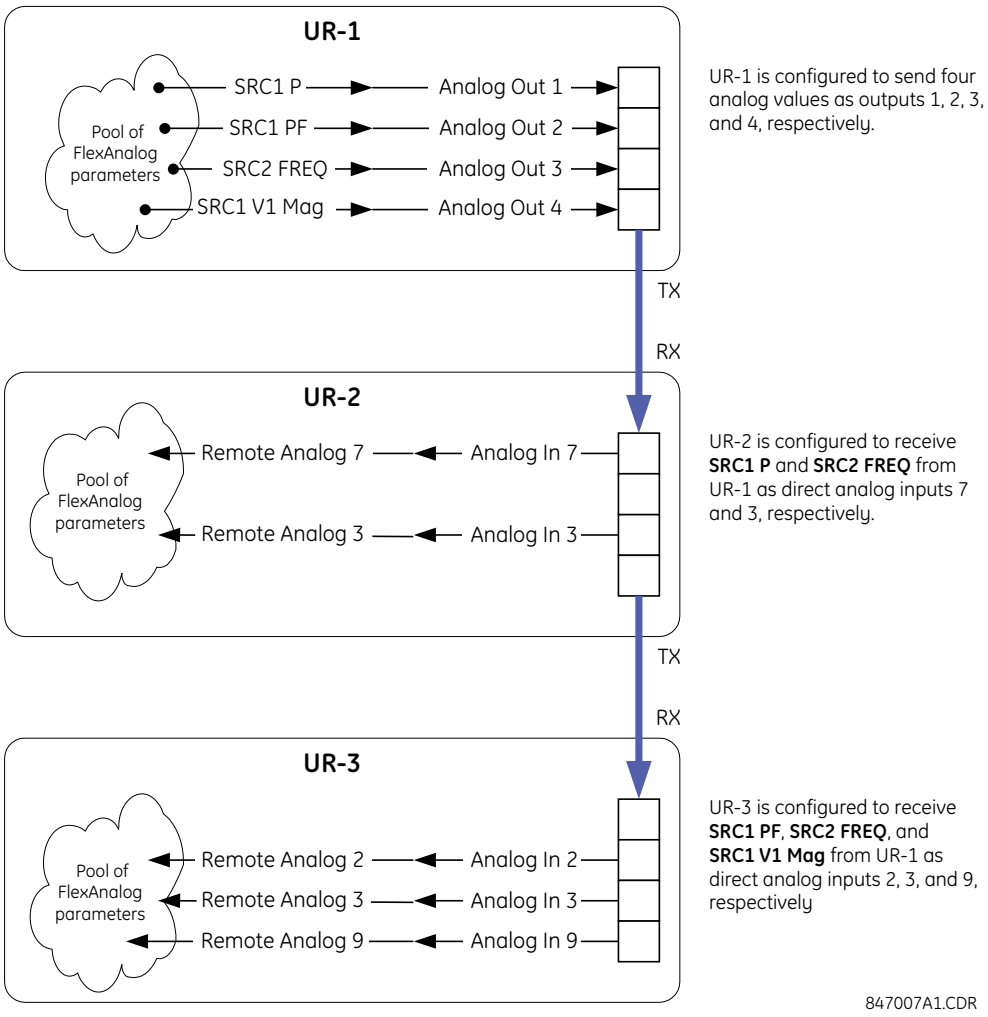

5.10.8 Direct integer inputs and outputs

5.10.8.1 Menu

SETTINGS ⇨⇩ INPUTS/OUTPUTS ⇨⇩ DIRECT INTEGERS

■ DIRECT INTEGERS ■	⇔	■ DIRECT INTEGER ■ OUTPUTS	See below
	⇧	■ DIRECT INTEGER ■ INPUTS	See page 5-382

The direct integers feature allows the transmission of integer values between any two UR-series relays that support the feature. The communication channel is the same as that used for the direct inputs and outputs. When the direct inputs and outputs, direct analogs, and direct integers features are used together on the same channel, all UR-series relays must be using firmware version 5.70 or higher.

Values are transmitted as unsigned 32-bit integers.

Transmission of values occurs once every 250 ms. This is defined as the integrity period. FlexLogic trigger checks are performed once per power system cycle. Once a deadband or FlexLogic trigger occurs, the next transmission does not occur until the next 250 ms integrity time-out.

5.10.8.2 Direct integer outputs

SETTINGS ⇨⇩ INPUTS/OUTPUTS ⇨⇩ DIRECT INTEGERS ⇨ DIRECT INTEGER OUTPUTS ⇨ DIRECT INTEGER 1(16) OUTPUT

■ DIRECT INTEGER 1 ■ OUTPUT	⇔	INTEGER 1 VALUE: Off	Range: Off, any FlexInteger parameter. See Appendix A for complete list.
	⇧	INTEGER 1 TRIGGER: Off	Range: FlexLogic operand

The direct integer outputs share the direct input and output settings for device ID, data rate, ring configuration, and channel crossover.

INTEGER 1 VALUE — This setting selects the FlexInteger parameter used to drive the associated direct integer output.

INTEGER 1 TRIGGER — This setting selects the FlexLogic operand used to trigger the transmission of the associated direct integer output. Transmission occurs on the rising edge of the operand. The operand must transition from 0 to 1 and remain at a value of 1 for at least one power system cycle to ensure detection of the rising edge and transmission of the associated direct integer output.

5.10.8.3 Direct integer inputs

SETTINGS ⇨⇩ INPUTS/OUTPUTS ⇨⇩ DIRECT INTEGERS ⇨ DIRECT INTEGER INPUTS ⇨ DIRECT INTEGER 1(16) INPUT

■ DIRECT INTEGER 1 ■ INPUT	⇔	DIRECT INTEGER 1 DEVICE: 0	Range: 0 to 16 in steps of 1
	⇩	DIRECT INTEGER 1 NUMBER: 0	Range: 0 to 16 in steps of 1
	⇩	INTEGER 1 DEFAULT: 1000	Range: 0 to 429496295 in steps of 1
	⇧	INTEGER 1 DEFAULT MODE: Default Value	Range: Default Value, Last Known

The direct integers feature allows the transmission of integer values between any two UR-series devices supporting the feature. The communication channel is the same as that used for the direct inputs and outputs feature. When the direct inputs/outputs, direct analogs, and direct integers features are used together on the same channel, the UR-series devices must be using firmware version 5.70 or higher.

The settings for direct integer input 1 are as follows. The description applies to all 16 direct integer inputs.

DIRECT INTEGER 1 DEVICE — This value selects the source of the direct integer 1 input. Direct integer input 1 is driven by the device programmed in this setting.

DIRECT INTEGER 1 NUMBER — This value specifies which input to extract the value for the direct integer 1 input. Direct integer input 1 is driven by the input programmed in this setting. This setting value corresponds to the direct integer output number of the sending device.

DIRECT INTEGER 1 DEFAULT — This setting specifies the value of direct integer input 1 when the associated direct device is offline and the **INTEGER 1 DEFAULT MODE** is set to "Default Value." When the associated direct device is offline and the default mode is set to "Last Known," the value of direct integer input 1 remains at the last received value. This value is stored as an unsigned 32-bit integer.

5.10.9 Teleprotection

5.10.9.1 Overview

The relay provides 16 teleprotection inputs on communications channel 1 (numbered 1-1 through 1-16) and 16 teleprotection inputs on communications channel 2 (on two-terminals two-channel and three-terminal systems only, numbered 2-1 through 2-16). The remote relay connected to channels 1 and 2 of the local relay is programmed by assigning FlexLogic operands to be sent via the selected communications channel. This allows the user to create

distributed protection and control schemes via dedicated communications channels. Some examples are directional comparison pilot schemes and direct transfer tripping. Note that failures of communications channels affect teleprotection functionality. The teleprotection function must be enabled to utilize the inputs.

5.10.9.2 Teleprotection inputs

SETTINGS ⇨⇩ INPUTS/OUTPUTS ⇨⇩ TELEPROTECTION ⇨ TELEPROT INPUTS

■ TELEPROT INPUTS ■	⇔	TELEPROT INPUT 1-1 DEFAULT: Off	Range: Off, On, Latest/Off, Latest/On
		⇩	
	⇕	TELEPROT INPUT 1-16 DEFAULT: Off	Range: Off, On, Latest/Off, Latest/On
	⇕	TELEPROT INPUT 2-1 DEFAULT: Off	Range: Off, On, Latest/Off, Latest/On
		⇩	
	⇧	TELEPROT INPUT 2-16 DEFAULT: Off	Range: Off, On, Latest/Off, Latest/On

Setting the **TELEPROT INPUT ~~ DEFAULT** setting to "On" defaults the input to logic 1 when the channel fails. A value of "Off" defaults the input to logic 0 when the channel fails.

The "Latest/On" and "Latest/Off" values freeze the input in case of lost communications. If the latest state is not known, such as after relay power-up but before the first communication exchange, then the input defaults to logic 1 for "Latest/On" and logic 0 for "Latest/Off."

5.10.9.3 Teleprotection outputs

SETTINGS ⇨⇩ INPUTS/OUTPUTS ⇨⇩ TELEPROTECTION ⇨⇩ TELEPROT OUTPUTS

■ TELEPROT OUTPUTS ■	⇔	TELEPROT OUTPUT 1-1: Off	Range: FlexLogic operand
		⇩	
	⇕	TELEPROT OUTPUT 1-16: Off	Range: FlexLogic operand
	⇕	TELEPROT OUTPUT 2-1: Off	Range: FlexLogic operand
		⇩	
	⇧	TELEPROT OUTPUT 2-16: Off	Range: FlexLogic operand

As the following figure demonstrates, processing of the teleprotection inputs/outputs is dependent on the number of communication channels and terminals. On two-terminal two-channel systems, they are processed continuously on each channel and mapped separately per channel. Therefore, to achieve redundancy, the user must assign the same operand on both channels (teleprotection outputs at the sending end or corresponding teleprotection inputs at the receiving end). On three-terminal two-channel systems, redundancy is achieved by programming signal re-transmittal in the case of channel failure between any pair of relays.

Figure 5-197: Teleprotection input/output processing

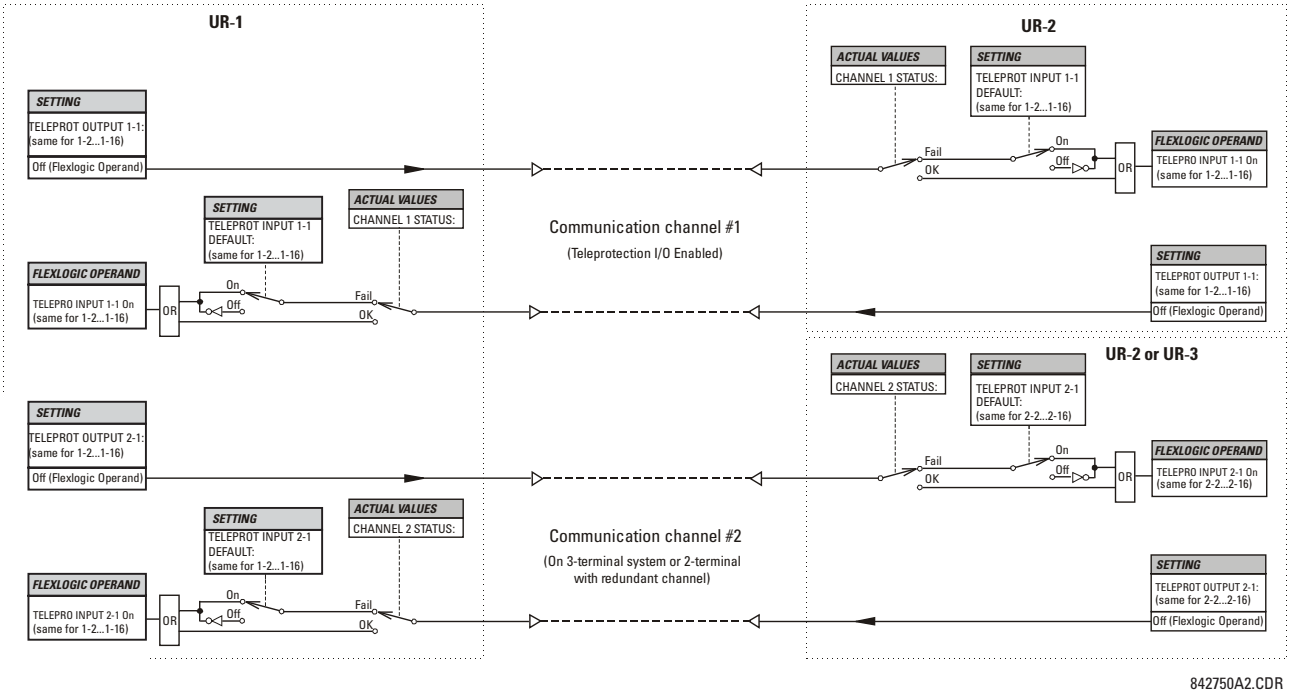

5

5.11 Transducer inputs/outputs

5.11.1 DCmA inputs

SETTINGS ⇨⇩ TRANSDUCER I/O ⇨⇩ DCMA INPUTS ⇨ DCMA INPUT F1(W8)

■ DCMA INPUT F1 ■	⇔	DCMA INPUT F1 FUNCTION: Disabled	Range: Disabled, Enabled
	⇩	DCMA INPUT F1 ID: DCMA Ip 1	Range: up to 20 alphanumeric characters
	⇩	DCMA INPUT F1 UNITS: µA	Range: six alphanumeric characters
	⇩	DCMA INPUT F1 RANGE: 0 to -1 mA	Range: 0 to –1 mA, 0 to +1 mA, –1 to +1 mA, 0 to 5 mA, 0 to 10mA, 0 to 20 mA, 4 to 20 m
	⇩	DCMA INPUT F1 MIN VALUE: 0.000	Range: –9999.999 to +9999.999 in steps of 0.001
	⇧	DCMA INPUT F1 MAX VALUE: 0.000	Range: –9999.999 to +9999.999 in steps of 0.001

SOFTWARE OPTION

The N60 is provided with optional DCmA capability, specified at the time of ordering.

Hardware and software are provided to receive signals from external transducers and to convert these signals into a digital format for use as required. The relay accepts inputs in the range of –1 to +20 mA DC, suitable for use with most common transducer output ranges; all inputs are assumed to be linear over the complete range. Hardware details are contained in chapter 3.

Before the DCmA input signal can be used, the value of the signal measured by the relay must be converted to the range and quantity of the external transducer primary input parameter, such as DC voltage or temperature. The relay simplifies this process by internally scaling the output from the external transducer and displaying the actual primary parameter.

DCmA input channels are arranged in a manner similar to CT and VT channels. Configure the individual channels with the settings shown here.

The channels are arranged in sub-modules of two channels, numbered from 1 through 8 from top to bottom. On power-up, the relay automatically generates configuration settings for every channel, based on the order code, in the same general manner that is used for CTs and VTs. Each channel is assigned a slot letter followed by the row number, 1 through 8 inclusive, which is used as the channel number. The relay generates an actual value for each available input channel.

Settings are generated automatically for every channel available in the specific relay as shown above for the first channel of a type 5F transducer module installed in slot F.

The function of the channel can be "Enabled" or "Disabled." If "Disabled," no actual values are created for the channel. An alphanumeric "ID" is assigned to each channel; this ID is included in the channel actual value, along with the programmed units associated with the parameter measured by the transducer, such as volts, °C, megawatts, and so on. This ID is also used to reference the channel as the input parameter to features designed to measure this type of parameter. The **DCMA INPUT F1 RANGE** setting specifies the mA DC range of the transducer connected to the input channel.

The **DCMA INPUT F1 MIN VALUE** and **DCMA INPUT F1 MAX VALUE** settings are used to program the span of the transducer in primary units. For example, a temperature transducer might have a span from 0 to 250 °C; in this case the **DCMA INPUT F1 MIN VALUE** value is "0" and the **DCMA INPUT F1 MAX VALUE** value is "250." Another example is a watts transducer with a span from –20 to +180 MW; in this case the **DCMA INPUT F1 MIN VALUE** value is "–20" and the **DCMA INPUT F1 MAX VALUE** value is "180." Intermediate values between the minimum and maximum values are scaled linearly.

5.11.2 RTD inputs

SETTINGS ⇨⇩ TRANSDUCER I/O ⇨⇩ RTD INPUTS ⇨ RTD INPUT F1(W8)

■ **RTD INPUT F1** ■	⇔	**RTD INPUT F1** **FUNCTION: Disabled**	Range: Disabled, Enabled
	⇩	**RTD INPUT F1 ID:** **RTD Ip 1**	Range: up to 20 alphanumeric characters
	⇧	**RTD INPUT F1 TYPE:** **100Ω Platinum**	Range: 100Ω Nickel, 10Ω Copper, 100Ω Platinum, 120Ω Nickel

Hardware and software is provided to receive signals from external resistance temperature detectors and convert these signals into a digital format for use as required. These channels are intended to be connected to any of the RTD types in common use. Specific hardware details are contained in chapter 3.

RTD input channels are arranged in a manner similar to CT and VT channels. The user configures individual channels with the settings shown here.

The channels are arranged in sub-modules of two channels, numbered from 1 through 8 from top to bottom. On power-up, the relay automatically generates configuration settings for every channel, based on the order code, in the same general manner that is used for CTs and VTs. Each channel is assigned a slot letter followed by the row number, 1 through 8 inclusive, which is used as the channel number. The relay generates an actual value for each available input channel.

Settings are automatically generated for every channel available in the specific relay as shown above for the first channel of a type 5C transducer module installed in the first available slot.

The function of the channel can be either "Enabled" or "Disabled." If "Disabled," there is not an actual value created for the channel. An alphanumeric ID is assigned to the channel; this ID is included in the channel actual values. It is also used to reference the channel as the input parameter to features designed to measure this type of parameter. Selecting the type of RTD connected to the channel configures the channel.

Actions based on RTD overtemperature, such as trips or alarms, are done in conjunction with the FlexElements feature. In FlexElements, the operate level is scaled to a base of 100°C. For example, a trip level of 150°C is achieved by setting the operate level at 1.5 pu. FlexElement operands are available to FlexLogic for further interlocking or to operate an output contact directly.

See the following table for reference temperature values for each RTD type.

Table 5-48: RTD temperature vs. resistance

Temperature		Resistance (in ohms)			
°C	°F	100 Ω Pt (DIN 43760)	120 Ω Ni	100 Ω Ni	10 Ω Cu
–50	–58	80.31	86.17	71.81	7.10
–40	–40	84.27	92.76	77.30	7.49
–30	–22	88.22	99.41	82.84	7.88
–20	–4	92.16	106.15	88.45	8.26
–10	14	96.09	113.00	94.17	8.65
0	32	100.00	120.00	100.00	9.04
10	50	103.90	127.17	105.97	9.42
20	68	107.79	134.52	112.10	9.81
30	86	111.67	142.06	118.38	10.19
40	104	115.54	149.79	124.82	10.58
50	122	119.39	157.74	131.45	10.97
60	140	123.24	165.90	138.25	11.35
70	158	127.07	174.25	145.20	11.74
80	176	130.89	182.84	152.37	12.12
90	194	134.70	191.64	159.70	12.51
100	212	138.50	200.64	167.20	12.90
110	230	142.29	209.85	174.87	13.28
120	248	146.06	219.29	182.75	13.67
130	266	149.82	228.96	190.80	14.06
140	284	153.58	238.85	199.04	14.44
150	302	157.32	248.95	207.45	14.83
160	320	161.04	259.30	216.08	15.22
170	338	164.76	269.91	224.92	15.61
180	356	168.47	280.77	233.97	16.00
190	374	172.46	291.96	243.30	16.39
200	392	175.84	303.46	252.88	16.78
210	410	179.51	315.31	262.76	17.17
220	428	183.17	327.54	272.94	17.56
230	446	186.82	340.14	283.45	17.95
240	464	190.45	353.14	294.28	18.34
250	482	194.08	366.53	305.44	18.73

5.11.3 DCmA outputs

SETTINGS ⇨⇩ TRANSDUCER I/O ⇨⇩ DCMA OUTPUTS ⇨ DCMA OUTPUT F1(W8)

■ DCMA OUTPUT F1 ■	⇔	DCMA OUTPUT F1 SOURCE: Off	Range: Off, any analog actual value parameter
	⇩	DCMA OUTPUT F1 RANGE: –1 to 1 mA	Range: –1 to 1 mA, 0 to 1 mA, 4 to 20 mA
	⇩	DCMA OUTPUT F1 MIN VAL: 0.000 pu	Range: –90.000 to 90.000 pu in steps of 0.001
	⇧	DCMA OUTPUT F1 MAX VAL: 1.000 pu	Range: –90.000 to 90.000 pu in steps of 0.001

Hardware and software is provided to generate DCmA signals that allow interfacing with external equipment. Hardware details are contained in chapter 3. The DCmA output channels are arranged in a manner similar to transducer input or CT and VT channels. The user configures individual channels with the settings as follows.

The channels are arranged in sub-modules of two channels, numbered 1 through 8 from top to bottom. On power-up, the relay automatically generates configuration settings for every channel, based on the order code, in the same manner used for CTs and VTs. Each channel is assigned a slot letter followed by the row number, 1 through 8 inclusive, which is used as the channel number.

Both the output range and a signal driving a given output are user-programmable via the following settings menu (an example for channel M5 is shown).

The relay checks the driving signal (*x* in equations below) for the minimum and maximum limits, and subsequently re-scales so the limits defined as **MIN VAL** and **MAX VAL** match the output range of the hardware defined as **RANGE**. The following equation is applied:

$$I_{out} = \begin{cases} I_{min} & \text{if } x < \textbf{MIN VAL} \\ I_{max} & \text{if } x > \textbf{MAX VAL} \\ k(x - \textbf{MIN VAL}) + I_{min} & \text{otherwise} \end{cases} \qquad \textbf{Eq. 5-38}$$

where

x is a driving signal specified by the **SOURCE** setting
I_{min} and I_{max} are defined by the **RANGE** setting
k is a scaling constant calculated as:

$$k = \frac{I_{max} - I_{min}}{\textbf{MAX VAL} - \textbf{MIN VAL}} \qquad \textbf{Eq. 5-39}$$

The feature is intentionally inhibited if the **MAX VAL** and **MIN VAL** settings are entered incorrectly, for example when **MAX VAL** – **MIN VAL** < 0.1 pu. The resulting characteristic is illustrated in the following figure.

Figure 5-198: DCmA output characteristic

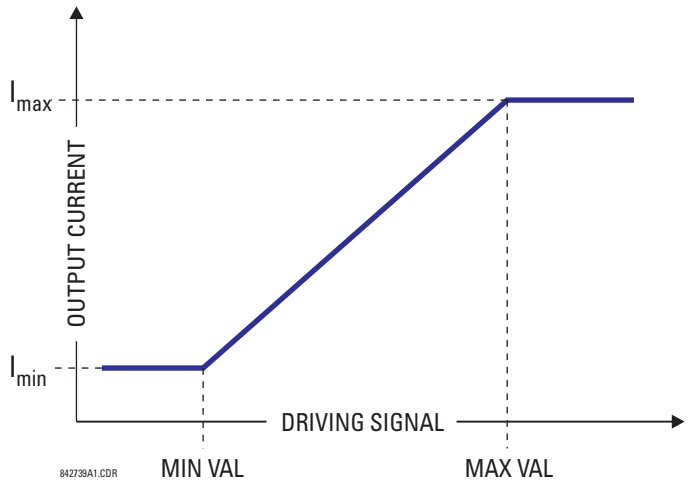

Settings

DCMA OUTPUT F1 SOURCE — This setting specifies an internal analog value to drive the analog output. Actual values (FlexAnalog parameters) such as power, current amplitude, voltage amplitude, power factor, etc. can be configured as sources driving DCmA outputs. See Appendix A for a list of FlexAnalog parameters.

DCMA OUTPUT F1 RANGE — This setting allows selection of the output range. Each DCmA channel can be set independently to work with different ranges. The three most commonly used output ranges are available.

DCMA OUTPUT F1 MIN VAL — This setting allows setting the minimum limit for the signal that drives the output. This setting is used to control the mapping between an internal analog value and the output current. The setting is entered in per-unit values. The base units are defined in the same manner as the FlexElement base units.

DCMA OUTPUT F1 MAX VAL — This setting allows setting the maximum limit for the signal that drives the output. This setting is used to control the mapping between an internal analog value and the output current. The setting is entered in per-unit values. The base units are defined in the same manner as the FlexElement base units.

NOTE

The **DCMA OUTPUT F1 MIN VAL** and **DCMA OUTPUT F1 MAX VAL** settings are ignored for power factor base units (that is, if the **DCMA OUTPUT F1 SOURCE** is set to FlexAnalog value based on power factor measurement).

Three application examples follow.

Example: Power monitoring

A three phase active power on a 13.8 kV system measured via UR-series relay source 1 is to be monitored by the DCmA H1 output of the range of –1 to 1 mA. The following settings are applied on the relay: CT ratio = 1200:5, VT secondary 115, VT connection is delta, and VT ratio = 120. The nominal current is 800 A primary and the nominal power factor is 0.90. The power is to be monitored in both importing and exporting directions and allow for 20% overload compared to the nominal.

The nominal three-phase power is:

$$P = \sqrt{3} \times 13.8\ \text{kV} \times 0.8\ \text{kA} \times 0.9 = 17.21\ \text{MW} \qquad \textbf{Eq. 5-40}$$

The three-phase power with 20% overload margin is:

$$P_{max} = 1.2 \times 17.21\ \text{MW} = 20.65\ \text{MW} \qquad \textbf{Eq. 5-41}$$

The base unit for power (refer to the FlexElements section in this chapter for additional details) is:

$$P_{BASE} = 115\ \text{V} \times 120 \times 1.2\ \text{kA} = 16.56\ \text{MW} \qquad \textbf{Eq. 5-42}$$

The minimum and maximum power values to be monitored (in pu) are:

$$\text{minimum power} = \frac{-20.65\ \text{MW}}{16.56\ \text{MW}} = -1.247\ \text{pu}, \quad \text{maximum power} = \frac{20.65\ \text{MW}}{16.56\ \text{MW}} = 1.247\ \text{pu} \qquad \textbf{Eq. 5-43}$$

The following settings are entered:

DCMA OUTPUT H1 SOURCE: "SRC 1 P"
DCMA OUTPUT H1 RANGE: "–1 to 1 mA"
DCMA OUTPUT H1 MIN VAl: "–1.247 pu"
DCMA OUTPUT H1 MAX VAL: "1.247 pu"

With the above settings, the output will represent the power with the scale of 1 mA per 20.65 MW. The worst-case error for this application can be calculated by superimposing the following two sources of error:

- ±0.5% of the full scale for the analog output module, or ±0.005 x (1-(-1)) x 20.65 MW = ±0.207 MW
- ±1% of reading error for the active power at power factor of 0.9

For example at the reading of 20 MW, the worst-case error is 0.01 × 20 MW + 0.207 MW = 0.407 MW.

Example: Current monitoring

The phase A current (true RMS value) is to be monitored via the H2 current output working with the range from 4 to 20 mA. The CT ratio is 5000:5 and the maximum load current is 4200 A. The current is to be monitored from 0 A upwards, allowing for 50% overload.

The phase current with the 50% overload margin is:

$$I_{max} = 1.5 \times 4.2\ \text{kA} = 6.3\ \text{kA} \qquad \textbf{Eq. 5-44}$$

The base unit for current (see the FlexElements section in this chapter for additional details) is:

$$I_{BASE} = 5 \text{ kA} \quad \textbf{Eq. 5-45}$$

The minimum and maximum power values to be monitored (in pu) are:

$$\text{minimum current} = \frac{0 \text{ kA}}{5 \text{ kA}} = 0 \text{ pu}, \quad \text{maximum current} = \frac{6.3 \text{ kA}}{5 \text{ kA}} = 1.26 \text{ pu} \quad \textbf{Eq. 5-46}$$

The following settings are entered:

DCMA OUTPUT H2 SOURCE: "SRC 1 Ia RMS"
DCMA OUTPUT H2 RANGE: "4 to 20 mA"
DCMA OUTPUT H2 MIN VAL: "0.000 pu"
DCMA OUTPUT H2 MAX VAL: "1.260 pu"

The worst-case error for this application can be calculated by superimposing the following two sources of error:

- ±0.5% of the full scale for the analog output module, or ±0.005 x (20 - 4) x 6.3 kA = ±0.504 kA
- ±0.25% of reading or ±0.1% of rated (whichever is greater) for currents between 0.1 and 2.0 of nominal

For example, at the reading of 4.2 kA, the worst-case error is max(0.0025 × 4.2 kA, 0.001 × 5 kA) + 0.504 kA = 0.515 kA.

Example: Voltage monitoring

A positive-sequence voltage on a 400 kV system measured via source 2 is to be monitored by the DCmA H3 output with a range of 0 to 1 mA. The VT secondary setting is 66.4 V, the VT ratio setting is 6024, and the VT connection setting is "Delta." The voltage is to be monitored in the range from 70% to 110% of nominal.

The minimum and maximum positive-sequence voltages to be monitored are:

$$V_{min} = 0.7 \times \frac{400 \text{ kV}}{\sqrt{3}} = 161.66 \text{ kV}, \quad V_{max} = 1.1 \times \frac{400 \text{ kV}}{\sqrt{3}} = 254.03 \text{ kV} \quad \textbf{Eq. 5-47}$$

The base unit for voltage (see the FlexElements section in this chapter for additional details) is:

$$V_{BASE} = 0.0664 \text{ kV} \times 6024 = 400 \text{ kV} \quad \textbf{Eq. 5-48}$$

The minimum and maximum voltage values to be monitored (in pu) are:

$$\text{minimum voltage} = \frac{161.66 \text{ kV}}{400 \text{ kV}} = 0.404 \text{ pu}, \quad \text{maximum voltage} = \frac{254.03 \text{ kV}}{400 \text{ kV}} = 0.635 \text{ pu} \quad \textbf{Eq. 5-49}$$

The following settings are entered:

DCMA OUTPUT H3 SOURCE: "SRC 2 V_1 mag"
DCMA OUTPUT H3 RANGE: "0 to 1 mA"
DCMA OUTPUT H3 MIN VAL: "0.404 pu"
DCMA OUTPUT H3 MAX VAL: "0.635 pu"

The limit settings differ from the expected 0.7 pu and 1.1 pu because the relay calculates the positive-sequence quantities scaled to the phase-to-ground voltages, even if the VTs are connected in "Delta" (see the Metering Conventions section in chapter 6), while at the same time the VT nominal voltage is 1 pu for the settings. Consequently the settings required in this example differ from naturally expected by the factor of $\sqrt{3}$.

The worst-case error for this application could be calculated by superimposing the following two sources of error:

- ±0.5% of the full scale for the analog output module, or ± 0.005 x (1-0) x 254.03 kV = ±1.27 kV
- ±0.5% of reading

For example, under nominal conditions, the positive-sequence reads 230.94 kV and the worst-case error is 0.005 × 230.94 kV + 1.27 kV = 2.42 kV.

5.12 Testing

5.12.1 IED mode config

SETTINGS ⇨⇩ TESTING ⇨ IED MODE CONFIG

■ IED MODE CONFIG ■	⇔	IED MODE: On	Range: On, Test, Test Blocked
	⇩	TEST MODE INPUT: Off	Range: FlexLogic operand
	⇩	TEST-BLK MODE INPUT: Off	Range: FlexLogic operand
	⇩	MODE CTRL VIA MMS: On	Range: FlexLogic operand (displays with IEC 61850)
	⇩	CONTACT I/O FORCING: On	Range: FlexLogic operand
	⇩	IED MODE TARGET: ENABLED	Range: Enabled, Disabled
	⇩	IED BEHAVIOR: On	Range: On, Test, Test Blocked
	⇧	TEST MODE TRIP SECURITY: Disabled	Range: Enabled, Disabled

5

The N60 provides a test facility to verify the functionality of contact inputs and outputs, some communication functions and the Phasor Measurement Unit (PMU, where applicable), using simulated conditions. It is accessible in the software and graphical front panel.

IED MODE — Can be in one of three states: On, Test, or Test Blocked. In UR 7.7 and later, as outlined in the Simulation section that follows, the UR test mode and GOOSE simulation mode are isolated, and they no longer depend on the mode setting here.

The On mode is for normal in service operation; the relay protection, control, and communication function is normal. Test features are disabled, except channel tests and PMU tests remain usable when provided. In On mode, the front panel Test Mode LED is off.

The **Test Blocked** mode is implemented per IEC61850-7-4 standard. This allows the relay to be isolated quickly so that it cannot negatively affect the power system or other parts of the substation automation system. This is primarily used for testing purposes, but can also be used for loading new firmware, changing hardware modules, and changing communication connections etc., providing all local or regional safety/testing guidelines are adhered to.

As far as practical, all relay output signals are blocked, contact outputs are de-energized, and latching outputs are frozen. Commands to HardFiber Bricks are blocked. The test bit of quality attribute of values that can be output via IEC 61850 services is set to "TRUE." The validity bit of the quality attribute of the data sent via IEC 61850 services is set to "GOOD" if no major error is active. Direct I/O, 87L channel and PMU tests are operational on applicable models. In **Test Blocked** mode, the front panel **Test Mode** LED is on.

The Test mode is for testing involving forcing relay operation by test signal injection and verifying correct relay output. This mode is also for tests to verify the relay outputs (both contact and communications) have the intended impact on specific power system devices or on specific other substation automation devices. Contact outputs can be selectively enabled or forced as described in the Force Contact Inputs and Force Contact Outputs sections that follow. Shared outputs to Bricks have their test mode flag raised, which results in their value only being accepted by relays also in forcible Test mode. The test bit and validity bit of the quality attribute of data sent via IEC 61850 services are set as "TRUE" and "GOOD" respectively. In Test mode, the front panel Test Mode LED flashes.

Otherwise, the UR remains fully operational while in the Test mode, allowing for various testing procedures. In particular, the protection and control elements, and FlexLogic function normally. Other than the IEC 61850 protocol, communications based inputs and outputs remain fully operational. The test procedure must take this into account. Direct I/O channel tests and PMU tests are usable on applicable models.

When set to Test mode and the operand selected by the **CONTACT I/O FORCING** setting is "On"

- If the **FORCE Cont Ip #** setting is set to Open or Closed, the respective quality attribute of the data sent via IEC 61850 services is set to q.source = "substituted"
- If the **FORCE Cont Op #** setting is set to Energized, De-energized, or Freeze, the respective quality attribute of the data sent via IEC 61850 services is set to q.source = "substituted"

When the Breaker Status is substituted manually from a graphical front panel, the respective quality attribute of the breaker position data sett via IEC 61850 services is set to q.source = "substituted."

The **IED MODE** setting can be selected through

- Front panel
- EnerVista UR Setup software
- FlexLogic operands
- IEC 61850 control to LLN0.Mod
- "INITIATE TEST MODE ON SIM" setting (under **SIMULATION > SUBSCRIBE TO SIMULATED VALUES** menu)

NOTE

It is important to note that following the writing of a new setting file to the relay, IED behavior will change according to the **IED MODE CONFIG** settings in the new file. The user must ensure that **IED MODE CONFIG** settings in the new file are set according to the expected behavior following the writing of the new setting file.

5

TEST MODE INPUT — This setting selects a FlexLogic operand that can put the UR into Test mode as per the logic diagram. Any FlexLogic operand can be assigned to enable forcible Test mode, that is driven by any remote inputs, logic outputs, front panel (user-programmable push buttons), and so on.

TEST-BLK MODE INPUT — This setting selects a FlexLogic operand that can put the UR into Test Blocked mode as per the logic diagram. Any FlexLogic operand can be assigned to enable test isolated mode, that is driven by any remote inputs, logic outputs, front panel (user-programmable push buttons) and so on.

MODE CTRL VIA MMS — This setting selects a FlexLogic operand for an IEC 61850 client to control the IED mode. When the operand is low/off, IED mode control from the IEC 61850 client is disabled, and the control request to LLN0.Mod.ctlVal returns return a negative response. When high/on, IED mode control by an IEC 61850 client is accepted.

CONTACT I/O FORCING — When in Test mode, the operand selected by this setting dictates further response of the UR to testing conditions, as described in the Force Contact Inputs and Force Contact Outputs sections that follow. When no operand is specified in this setting, forcing of inputs and outputs during Test mode are not available.

The test mode state is indicated on the relay front panel by a combination of the Test Mode LED indicator, the In-Service LED indicator, and by the critical fail relay, as shown in the table.

IED MODE TARGET — When this setting is **Enabled**, the corresponding target message of IED Mode Config is displayed on the front panel when the relay behavior is either TEST or TEST BLOCKED. The target message gets self-reset when the relay behavior is ON.

When this setting is **Disabled**, target message is not displayed when the relay behavior is either TEST or TEST BLOCKED.

Table 5-49: Test mode operation

IED MODE setting	In-Service LED	Test Mode LED	Critical fail relay	CONTACT I/O FORCING setting	Contact input and output behavior
On	Unaffected	Off	Normal	No effect	Normal
Test Blocked	Off	On	De-energized	No effect	Contact outputs disabled
Test	Off	Flashing	De-energized	Off	Normal
				On	Controlled by forcing features

NOTE

Following a restart or power-up, the **CONTACT I/O FORCING** setting remains at the last value before restart, but force contact input and force contact output settings revert to Normal state.

Before uploading settings to the Online Window from the Offline Window of the software, ensure that the settings in this panel in the Offline Window have been set to required values. Otherwise, undesired relay operation can occur.

IED BEHAVIOR — Displays the actual behavior of the IED based on different inputs to control the **IED MODE**. Note that the test mode can be changed through the front panel, EnerVista software, FlexLogic operands, IEC 61850 control to LLN0.Mod, and **INITIATE TEST MODE ON SIM** setting, with the following behavior.

TEST MODE TRIP SECURITY — This setting is used to govern both IOC Trip Security and Differential Trip Security functions. It is in effect only when the IED is not in the normal in-service operation mode (i.e., **IED Mode** is set to a value other than **On**).

Table 5-50: IED fields based on input

Change to IED MODE	Behavior
Using front panel	**IED MODE** and **IED BEHAVIOR** change in software
Using software	**IED MODE** and **IED BEHAVIOR** change on front panel
Using operand	**IED MODE** does not change in software or front panel, **IED BEHAVIOR** reflects change
Using **INITIATE TEST MODE ON SIM** setting	**IED MODE** and **IED BEHAVIOR** do not change in software or front panel

5.12.1.1 IED mode process

The **IED MODE** setting is changed to Test or Test Blocked (depending upon the selected setting value for "INITIATE TEST MODE ON SIM") when the relay is put into simulation mode. After this, the **IED MODE** is controlled by the **TESTING ⇨ IED MODE CONFIG** menu.

The **IED MODE** selection is illustrated in the logic diagram.

The SR Latch that drives the UR into Test mode or On mode are reset-dominant, which means that Test Blocked mode has the highest priority over Test and On modes, when simultaneous commands are active. For example, if both the FlexLogic operands assigned to the **TEST MODE INPUT** and **TEST-BLK MODE INPUT** settings are ON, then the **IED MODE** is Test Blocked.

If Any Major error FlexLogic operand is set, then **IED MODE** is set to Test Blocked.

Following UR restart or power-up, the **IED MODE** remains latched at the last value, until change is trigged by another input/command.

When the relay simulation mode is enabled (LPHD.Sim.stVal = TRUE), the "INITIATE TEST MODE ON SIM" setting triggers respective test mode. If the relay is already in Test or Test Blocked mode, the priority scheme defined in the **IED MODE** processing logic decides the resulting IED mode.

In summary, enabling the Test or Test Blocked mode in the **TESTING ⇨ IED MODE CONFIG** menu has no impact on the simulation mode. However, enabling the simulation mode triggers the respective test mode selected by the "INITIATE TEST MODE ON SIM" setting and the resulting IED mode is decided by the **IED MODE** process logic diagram. Once the simulation mode is enabled, the user can switch independently among IED modes using the **IED MODE CONFIG** settings while the simulation mode continues.

As shown in the logic diagram, the "INITIATE TEST MODE ON SIM" setting triggers the respective IED mode only when the relay is entering into simulation mode (meaning on the positive edge trigger of RLY IN SIM MODE FlexLogic operand) or there is a change in the "INITIATE TEST MODE ON SIM" setting value. Once simulation mode is enabled, any command to change the IED Mode triggers the respective IED mode. When the simulation mode is disabled, the test mode initiated by "INITIATE TEST MODE ON SIM" setting resets.

Figure 5-199: IED mode processing logic

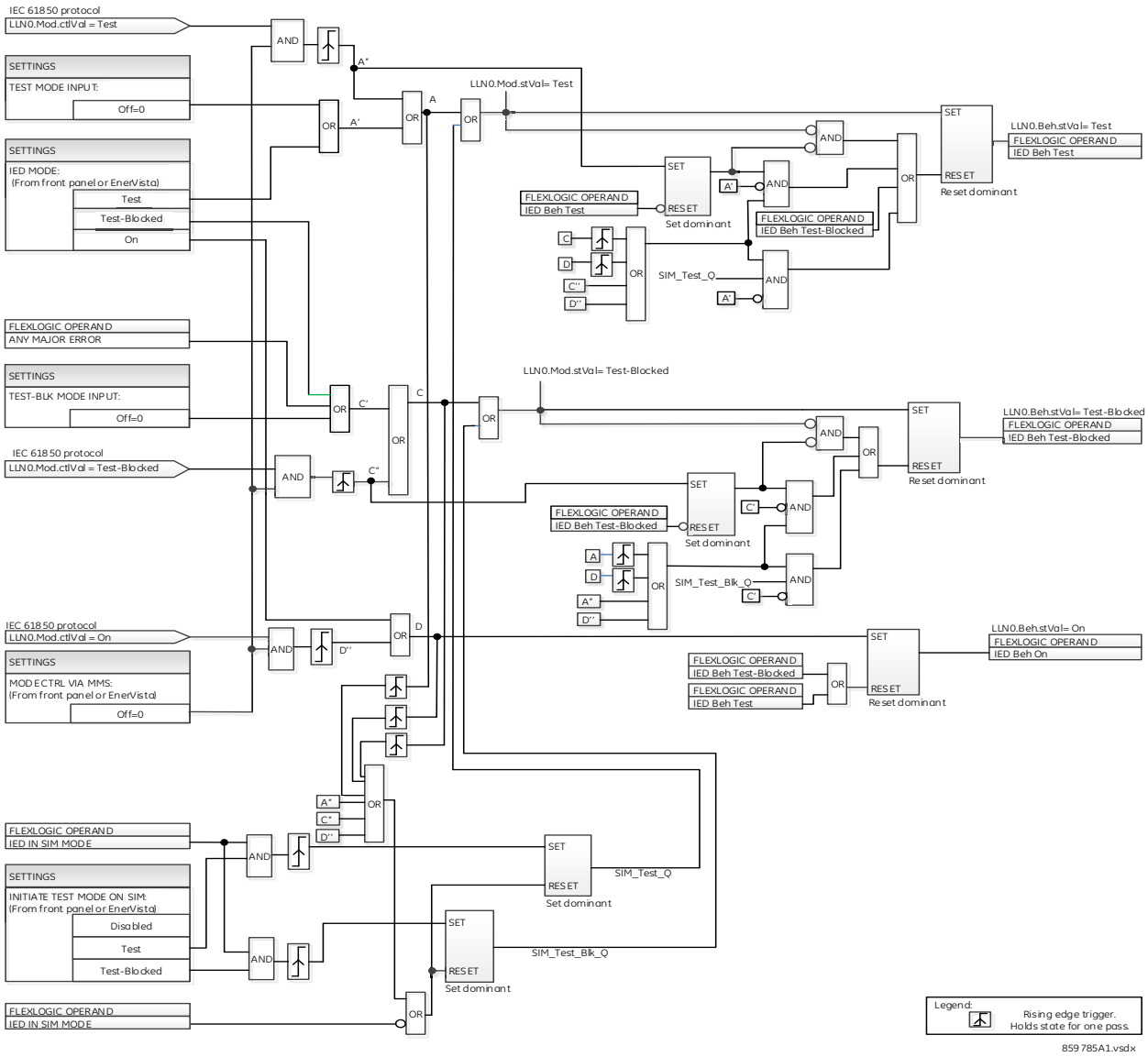

5.12.2 Force contact inputs

SETTINGS ⇨⇩ TESTING ⇨⇩ FORCE CONTACT INPUTS

■ **FORCE CONTACT INPUTS**	⇔	**FORCE Cont Ip 1 Normal**	Range: Normal, Open, Closed
	⇩	**FORCE Cont Ip 2 Normal**	Range: Normal, Open, Closed
	⇩		
	⇧	**FORCE Cont Ip xx Normal**	Range: Normal, Open, Closed

The force contact inputs feature provides a method of performing checks on the function of all contact inputs. While in Test mode, the relay contact inputs can be pre-programmed to respond in the following ways:

- If set to "Normal," the input remains fully operational. It is controlled by the voltage across its input terminals and can be turned on and off by external circuitry. Select this value if a given input must be operational during the test. This includes, for example, an input initiating the test, or being a part of a user pre-programmed test sequence.
- If set to "Open," the input is forced to report as opened (Logic 0) while the operand selected by **CONTACT I/O FORCING** setting is On, regardless of the voltage across the input terminals. While the selected operand is Off, the input behaves as it does when in service.
- If set to "Closed," the input is forced to report as closed (Logic 1) while the operand selected by **CONTACT I/O FORCING** setting is On regardless of the voltage across the input terminals. While the selected operand is Off, the input behaves as it does when in service.

NOTE

Following a restart or power-up, the **CONTACT I/O FORCING** setting remains at the last value before restart, but force contact input and force contact output settings revert to Normal state.

5.12.3 Force contact outputs

SETTINGS ⇨⇩ TESTING ⇨⇩ FORCE CONTACT OUTPUTS

■ FORCE CONTACT ■ OUTPUTS	⇔	FORCE Cont Op 1 Normal	Range: Normal, Energized, De-energized, Freeze
	⇩	FORCE Cont Op 2 Normal	Range: Normal, Energized, De-energized, Freeze
	⇩		
	⇧	FORCE Cont Op xx Normal	Range: Normal, Energized, De-energized, Freeze

The force contact outputs feature provides a method of performing checks on the function of all contact outputs.

While in Test mode, the relay contact outputs can be pre-programmed to respond in the following ways:

- If set to "Normal," the contact output remains fully operational. It operates when its control operand is logic 1 and resets when its control operand is logic 0.
- If set to "Energized," the output closes and remains closed while the operand selected by the **CONTACT I/O FORCING** setting is On, regardless of the status of the operand configured to control the output contact. While the selected operand is Off, the output behaves as it does when in service.
- If set to "De-energized," the output opens and remains opened while the operand selected by the **CONTACT I/O FORCING** setting is On, regardless of the status of the operand configured to control the output contact. While the selected operand is Off, the output behaves as it does when in service.
- If set to "Freeze," the output retains its position at the instant before the **IED MODE** was Test and the operand selected by the **CONTACT I/O FORCING** setting was On, regardless of later changes in the status of the operand configured to control the output contact. While the selected operand is Off, the output behaves as it does when in service.

NOTE

Following a restart or power-up, the **CONTACT I/O FORCING** setting remains at the last value before restart, but force contact input and force contact output settings revert to Normal state.

5.12.4 Phasor Measurement Unit test values

SETTINGS ⇨⇩ TESTING ⇨⇩ PMU TEST VALUES ⇨ PMU 1(6) TEST VALUES

■ PMU 1 ■ TEST VALUES	⇔	PMU 1 TEST FUNCTION: Disabled	Range: Enabled, Disabled
	⇩	PMU 1 VA TEST MAGNITUDE: 500.00 kV	Range: 0.00 to 700.00 kV in steps of 0.01

⇳	**PMU 1 VA TEST ANGLE: 0.00°**	Range: –180.00 to 180.00° in steps of 0.05
⇳	**PMU 1 VB TEST MAGNITUDE: 500.00 kV**	Range: 0.00 to 700.00 kV in steps of 0.01
⇳	**PMU 1 VB TEST ANGLE: –120.00°**	Range: –180.00 to 180.00° in steps of 0.05
⇳	**PMU 1 VC TEST MAGNITUDE: 500.00 kV**	Range: 0.00 to 700.00 kV in steps of 0.01
⇳	**PMU 1 VC TEST ANGLE: 120.00°**	Range: –180.00 to 180.00° in steps of 0.05
⇳	**PMU 1 VX TEST MAGNITUDE: 500.00 kV**	Range: 0.00 to 700.00 kV in steps of 0.01
⇳	**PMU 1 VX TEST ANGLE: 0.00°**	Range: –180.00 to 180.00° in steps of 0.05
⇳	**PMU 1 IA TEST MAGNITUDE: 1.000 kA**	Range: 0.000 to 9.999 kA in steps of 0.001
⇳	**PMU 1 IA TEST ANGLE: –10.00°**	Range: –180.00 to 180.00° in steps of 0.05
⇳	**PMU 1 IB TEST MAGNITUDE: 1.000 kA**	Range: 0.000 to 9.999 kA in steps of 0.001
⇳	**PMU 1 IB TEST ANGLE: –130.00°**	Range: –180.00 to 180.00° in steps of 0.05
⇳	**PMU 1 IC TEST MAGNITUDE: 1.000 kA**	Range: 0.000 to 9.999 kA in steps of 0.001
⇳	**PMU 1 IC TEST ANGLE: 110.00°**	Range: –180.00 to 180.00° in steps of 0.05
⇳	**PMU 1 IG TEST MAGNITUDE: 0.000 kA**	Range: 0.000 to 9.999 kA in steps of 0.001
⇳	**PMU 1 IG TEST ANGLE: 0.00°**	Range: –180.00 to 180.00° in steps of 0.05
⇳	**PMU 1 TEST FREQUENCY: 60.000 Hz**	Range: 20.000 to 70.000 Hz in steps of 0.001
⇧	**PMU 1 TEST df/dt: 0.00 Hz/s**	Range: –10.00 to 10.00 Hz/s in steps of 0.01

The relay must be in test mode to use the PMU test mode. That is, the **TESTING ⇨ TEST MODE FUNCTION** setting must be "Enabled," and the **TESTING ⇨⇩ TEST MODE INITIATE** initiating signal must be "On."

During the PMU test mode, the physical channels (VA, VB, VC, VX, IA, IB, IC, and IG), frequency, and rate of change of frequency are substituted with user values, while the symmetrical components are calculated from the physical channels. The test values are not explicitly marked in the outgoing data frames. When required, it is recommended to use the user-programmable digital channels to signal the IEEE C37.118 client that test values are being sent in place of the real measurements.

The UR Synchrophasor Implementation defines a test mode that sends a pre-defined set of synchrophasors out over the communication channel when the test mode function setting is enabled. In test mode, the following actions take place:

- The Data Invalid / Test Mode bit (bit 15 in the STAT word) is set
- The Sim bit in all output datasets is set

5.13 Simulation

SETTINGS ⇨⇩ SIMULATION

■ SETTINGS ■ SIMULATION	⇔	■ SUBSCRIBE TO ■ SIMULATED VALUES	See below
	⇧	■ PUBLISH ■ SIMULATED VALUES	See page 5-398

5.13.1 Subscribe to simulated values

SETTINGS ⇨⇩ SIMULATION ⇨ SUBSCRIBE TO SIMULATED VALUES

■ SUBSCRIBE TO ■ SIMULATED VALUES	⇔	SIMULATION MODE: Disabled	Range: Disabled, Enabled
	⇩	SIM MODE INPUT: Off	Range: FlexLogic operand
	⇩	SIM CTRL VIA MMS: On	Range: FlexLogic operand
	⇩	INITIATE TEST MODE ON SIM: Test-Blocked	Range: Disabled, Test, Test-Blocked
	⇩	SIM MODE TARGET: Enabled	Range: Enabled, Disabled
	⇩	SIM MODE EVENTS: Disabled	Range: Disabled, Enabled
	⇧	SIMULATION MODE STATUS: Disabled	Range: Disabled, Enabled

SOFTWARE OPTION

The N60 is provided with optional IEC 61850 communications that include simulation. The option is specified at the time of ordering. The field reads "Unavailable" when IEC 61850 is not present.

Prior to UR 7.7, when the UR **TEST MODE FUNCTION** is set to "Test Blocked" or "Test," the sim bit in the header of all transmitted GOOSE messages is set to "TRUE," so that the UR plays the simulator role during the testing and commissioning phases. The "Sim" data attribute in the relay is set (<MasterLD>/LPHD1.Sim.stVal = TRUE), so that if GOOSE messages are received with the "simulation" flag set, these are used in place of the normal messages. The quality attribute values that are transmitted via GOOSE services are set to "valid" + "test."

In UR 7.7 and later, the UR test mode and GOOSE simulation mode are isolated. The sim bit in the transmitted GOOSE messages and the relay "Sim" attribute (<MasterLD>/LPHD1.Sim.stVal) are controlled via new Modbus settings and MMS control requests. They no longer depend on the UR **TEST MODE FUNCTION** or **IED MODE**.

The settings also display in the software when the N60 is set to IEC 61850 Edition 2. When using IEC 61850 Edition 1, the settings are read-only.

SIMULATION MODE — When set to Disabled, the relay "Sim" attribute (<MasterLD>/LPHD1.Sim.StVal) is set to False and the GOOSE/SV messages received with simulation flag/bit set are ignored.

When set to Enabled, the relay "Sim" attribute (<MasterLD>/LPHD1.Sim.StVal) is set to True, so that if GOOSE/SV messages are received with the "simulation" flag/bit set, these are used in place of the normal messages.

SV messages has a simulation bit in the Reserved 1 field.

SIM MODE INPUT — This setting selects a FlexLogic operand. When set, the relay Simulation mode is enabled and, if the messages (either GOOSE or SV) are received with the simulation bit true, messages from simulation devices are used in place of actual messages. Any FlexLogic operand can be assigned to enable simulation mode, that is, driven by any remote inputs, logic outputs, front panel (user-programmable pushbuttons), and so on.

SIM CTRL VIA MMS — This setting selects a FlexLogic operand for the IEC 61850 client to control the simulation mode.

When set to Off, simulation mode selection via IEC 61850 client is disabled and control request to LPHD.Sim.ctlVal returns return negative response.

When set to On, simulation mode selection via IEC 61850 client is accepted.

This setting can be set from the front panel, EnerVista UR Setup software, FlexLogic operand, and IEC61850 control to LPHD.Sim.ctlVal.

INITIATE TEST MODE ON SIM — This setting initiates the selected test mode when simulation mode is enabled.

When set to Disabled, any command (from an IEC 61850 client, front panel, or Flex Operand) to set the simulation mode enables the Sim mode irrespective of the current IED mode.

When set to Test or Test-Blocked, any command to set the simulation mode selects respective test mode, if the relay is not already in Test or Test-Blocked mode. If the relay is already in Test or Test-Blocked mode by any user command (from IEC 61850 client, front panel, or Flex Operand), the respective priority defined in test mode processing decides the resultant test mode.

In summary, enabling the Test or Test-Blocked mode via the **IED MODE** setting (from front panel or EnerVista), via a IEC61850 client command to LLN0.Mod.ctlVal, or via **TEST MODE INPUT** and **TEST-BLK MODE INPUT** settings (FlexLogic operands) has no impact on the simulation mode. However, enabling the simulation mode using the **SIMULATION MODE** setting (from front panel or EnerVista), via an IEC61850 client command to LPHD.Sim.ctlVal, or via **SIM MODE INPUT** setting (FlexLogic operand) enables the selected test mode by the **INITIATE TEST MODE ON SIM** setting. A user can independently disable the test or test-blocked mode by any specified command type, but the relay simulation mode continues and accepts the simulated values in place of actual values until the simulation mode is disabled.

SIM MODE TARGET — When this setting is **Enabled**, a target message 'IED IN SIM MODE' is displayed on the front panel when the relay is in Simulation mode. The target message gets self-reset when the relay exits the Simulation mode.

When this setting is **Disabled**, target message is not displayed when the relay is in Simulation mode.

SIM MODE EVENT — This setting is used to control whether the change in Simulation mode of relay is recorded in the event recorder. When this setting is Enabled, the event showing the change in the status of Simulation is recorded. If this setting is Disabled, the events related to Simulation mode are not recorded.

SIMULATION MODE STATUS — This is an actual value that indicates the present simulation mode of the relay.

Figure 5-200: Simulation mode logic

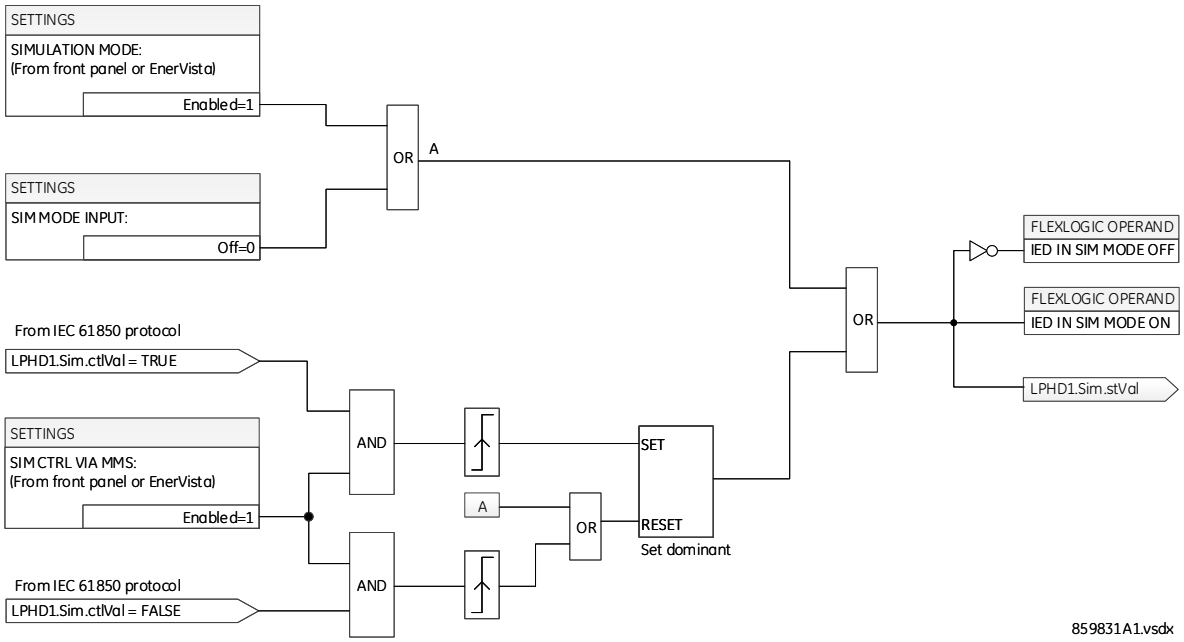

5.13.2 Publish simulated values

SETTINGS ⇨⇩ SIMULATION ⇨⇩ PUBLISH SIMULATED VALUES

■ **PUBLISH** ■ **SIMULATED VALUES**	⇔	**TxGOOSE SIM MODE:** **Disabled**	Range: Disabled, Enabled
	⇩	**SIM Q.VALIDITY:** **NONE**	Range: NONE, GOOD, INVALID, QUESTIONABLE
	⇧	**SIM Q.TEST:** **NONE**	Range: NONE, TRUE, FALSE

TxGOOSE SIM MODE — When set to Disabled, the sim bits in all transmitted GOOSE messages are set to FALSE.

When set to Enabled, the sim bits in all transmitted GOOSE messages are set to TRUE.

This setting can be modified through the front panel, EnerVista UR Setup software, IEC 61850 client control to <MasterLD>/LPHD1.TxGoSim.

SIM Q.VALIDITY — This setting simulates the validity bits of the quality attribute values included in all transmitted GOOSE messages. When set to NONE, the q.Validity bits are set based on the logical node behavior value. When set to any other value, the q.Validity bits of quality attributes included in all transmitted GOOSE messages are set to the selected value.

This setting is used when **TxGOOSE SIM MODE** is set to Enabled. It can be modified through the front panel and EnerVista UR Setup software.

SIM Q.TEST — This setting simulates the Test bit of the quality attribute values included in all transmitted GOOSE messages. When set to NONE, the q.Test bit is set based on the relay **TEST MODE FUNCTION** / **IED MODE**. When set to any other value, the q.Test bit of quality attributes included in all transmitted GOOSE messages is set to the selected value.

This setting is used when **TxGOOSE SIM MODE** is set to Enabled. It can be modified through the front panel and EnerVista UR Setup software.

N60 Network Stability and Synchrophasor Measurement System

Chapter 6: Actual values

This chapter outlines viewing of data on the front panel, software, and/or web browser.

6.1 Actual values menu

■■ ACTUAL VALUES ■■ FRONT PANEL	⇔	■ ■	Access in EnerVista See page 6-4
⇩			
■■ ACTUAL VALUES ■■ STATUS	⇔	■ IED ■	See page 6-5
⇩	⇕	■ CONTACT INPUTS ■	See page 6-5
	⇕	■ VIRTUAL INPUTS ■	See page 6-6
	⇕	■ RxGOOSE BOOLEANS ■	See page 6-6
	⇕	■ RxGOOSE DPS ■	See page 6-6
	⇕	■ TELEPROTECTION ■ INPUTS	See page 6-6
	⇕	■ CONTACT OUTPUTS ■	See page 6-7
	⇕	■ VIRTUAL OUTPUTS ■	See page 6-7
	⇕	■ RxGOOSE ■ STATUS	See page 6-7
	⇕	■ RxGOOSE ■ STATISTICS	See page 6-8
	⇕	■ FIXED GOOSE ■	See page 6-8

■ DIGITAL COUNTERS ■	See page 6-9
■ BREAKER STATUS ■	See page 6-9
■ SELECTOR SWITCHES ■	See page 6-10
■ FLEX STATES ■	See page 6-10
■ ETHERNET ■	See page 6-10
■ REAL TIME CLOCK ■ SYNCHRONIZING	See page 6-11
■ DIRECT INPUTS ■	See page 6-12
■ DIRECT DEVICES ■ STATUS	See page 6-12
■ DIRECT INTEGER ■ INPUTS	See page 6-13
■ TELEPROT CH TESTS ■	See page 6-13
■ COMM STATUS ■ REMAINING CONNECT	See page 6-13
■ PRP STATUS ■	See page 6-14
■ TxGOOSE STATUS ■	See page 6-15
■ PROTOCOL ■	See page 6-15
■ MULTI-RANGE SIGNAL ■ OSCILL DETECTOR	See page 6-29
■■ ACTUAL VALUES ■■ METERING	■ SOURCE SRC 1 ■	See page 6-19
■ SOURCE SRC 2 ■	
■ SOURCE SRC 3 ■	
■ SOURCE SRC 4 ■	
■ SOURCE SRC 5 ■	
■ SOURCE SRC 6 ■	
■ SYNCHROCHECK ■	See page 6-25
■ TRACKING FREQUENCY ■	See page 6-25
■ FLEXELEMENTS ■	See page 6-26

6

	⇕	■ DIGITIZER ■	See page 6-26
	⇕	■ 8-BIT ■ COMPARATORS	See page 6-26
	⇕	■ SUMMATOR ■	See page 6-27
	⇕	■ DIRECT ANALOGS ■	See page 6-27
	⇕	■ RxGOOSE ■ Analogs	See page 6-27
	⇕	■ SENSITIVE ■ DIRECTIONAL POWER	See page 6-27
	⇕	■ FREQUENCY RATE ■ OF CHANGE 1	See page 6-28
	⇕	■ FREQUENCY RATE ■ OF CHANGE 2	
	⇕	■ FREQUENCY RATE ■ OF CHANGE 3	
	⇕	■ FREQUENCY RATE ■ OF CHANGE 4	
	⇕	■ PHASOR MEASUREMENT ■ UNIT	See page 6-28
	⇕	■ PMU AGGREGATOR ■	See page 6-29
	⇕	■ TRANSDUCER I/O ■ DCMA INPUTS	See page 6-29
	⇕	■ TRANSDUCER I/O ■ RTD INPUTS	See page 6-29
	⇕	■ HARMONIC ■ DETECTION	See page 6-29
⇧	⇧	■ MULTI-RANGE SIGNAL ■ OSCILL DETECTOR	See page 6-29
■■ ACTUAL VALUES ■■ REMOTE RESOURCES	⇔	■ FIELD UNIT U1 ■ ID: U 1	See page 6-30
		⇩	
⇧	⇧	■ FIELD UNIT U8 ■ ID: U 8	
■■ ACTUAL VALUES ■■ PB MODULE	⇔	■ GENERAL STATUS ■	See page 6-30
⇩	⇕	■ RxSV Status ■	See page 6-31
⇧	⇧	■ TIME SYNC ■	See page 6-32
■■ ACTUAL VALUES ■■ RECORDS	⇔	■ USER PROGRAMMABLE ■ FAULT REPORTS	See page 6-35
⇩	⇕	■ EVENT RECORDS ■	See page 6-35

6

	⇕	■ OSCILLOGRAPHY ■	See page 6-37
	⇕	■ DATA LOGGER ■	See page 6-37
⇧	⇧	■ PMU ■ RECORDS	See page 6-38
■■ ACTUAL VALUES ■■ PRODUCT INFO	⇔	■ MODEL INFORMATION ■	See page 6-38
	⇧	■ FIRMWARE REVISIONS ■	See page 6-39

For status reporting, 'On' represents Logic 1 and 'Off' represents Logic 0.

6.2 Front panel

6.2.1 Enhanced and basic front panels

The front panel can be viewed and used in the EnerVista software, for example to view an error message displayed on the front panel. Settings cannot be changed in this interface.

To view the front panel in EnerVista software:

1. Click **Actual Values > Front Panel**.
2. Click the pushbutton or LCD area to enlarge it.

Figure 6-1: Front panel use in the software (C60 shown)

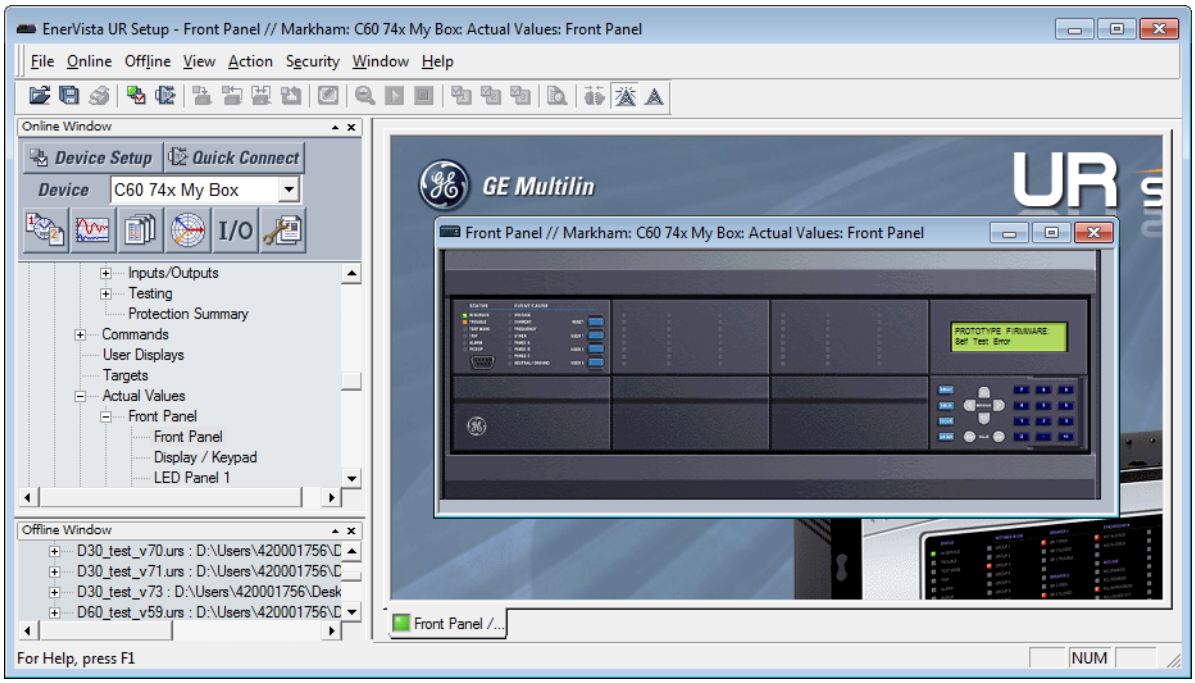

6.2.2 Graphical front panel

SOFTWARE OPTION

The graphical front panel is a hardware option.

Annunciator alarms can be acknowledged and reset, and LEDs and pushbuttons can be viewed.

To view alarms for the graphical front panel in EnerVista:

1. Access **Actual Values > Graphical Panel > Annunciator Panel**. Alarms are listed, allowing remote acknowledgement/ reset.
2. Click the **Acknowledge** or **Reset** button for an alarm.

Figure 6-2: Annunciator alarms displayed in the software)

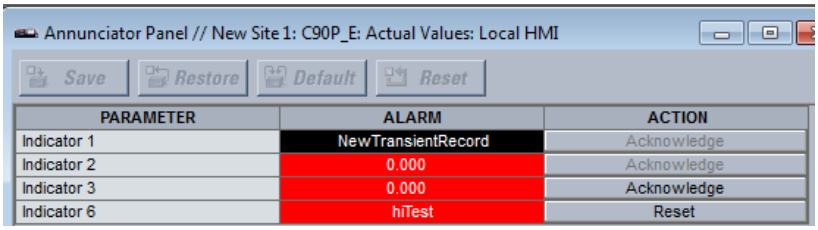

To view LEDs and pushbuttons on the graphical front panel in EnerVista:

1. Access **Actual Values > Graphical Panel > LEDs** or **Pushbuttons**. The window displays.

6.3 Status

6.3.1 IED

ACTUAL VALUES ⇨ STATUS ⇨⇩ IED

■ IED ■	⇔	**IED BEHAVIOUR:** **On**	Range: On, Test, Test Blocked
	⇧	**SIMULATION MODE** **STATUS: Disabled**	Range: Disabled, Enabled Displays with IEC 61850

IED BEHAVIOUR — Displays the **SETTINGS ⇨⇩ TESTING ⇨⇩ IED MODE CONFIG ⇨⇩ IED MODE** value.

SIMULATION MODE STATUS — Displays the **SETTINGS ⇨⇩ SIMULATION ⇨ SUBSCRIBE TO SIMULATED VALUES ⇨ SIMULATION MODE** value, meaning if simulation mode is enabled or disabled on a device.

6.3.2 Contact inputs

ACTUAL VALUES ⇨ STATUS ⇨ CONTACT INPUTS

■ CONTACT INPUTS ■	⇔	**Cont Ip 1** **Off**	Range: On, Off
		⇩	
	⇧	**Cont Ip xx** **Off**	Range: On, Off

The present status of the contact inputs is shown here. The first line of a message display indicates the ID of the contact input. For example, 'Cont Ip 1' refers to the contact input in terms of the default name-array index. The second line of the display indicates the logic state of the contact input.

6.3.3 Virtual inputs

ACTUAL VALUES ⇨ STATUS ⇨⇩ VIRTUAL INPUTS

■ VIRTUAL INPUTS ■	⇔	Virt Ip 1 Off	Range: On, Off
		⇩	
	⇧	Virt Ip 128 Off	Range: On, Off

The present status of the 128 virtual inputs is shown here. The first line of a message display indicates the ID of the virtual input. For example, 'Virt Ip 1' refers to the virtual input in terms of the default name. The second line of the display indicates the logic state of the virtual input.

6.3.4 RxGOOSE boolean inputs

ACTUAL VALUES ⇨ STATUS ⇨⇩ RxGOOSE BOOLEANS

■ RxGOOSE BOOLEANS ■	⇔	RxGOOSE BOOLEAN 1 STATUS: Off	Range: On, Off
		⇩	
	⇧	RxGOOSE BOOLEAN 256 STATUS: Off	Range: On, Off

6

This menu displays when the product includes an IEC 61850 software option.

6.3.5 RxGOOSE DPS inputs

ACTUAL VALUES ⇨ STATUS ⇨⇩ RxGOOSE DPS

■ RxGOOSE DPS ■	⇔	RxGOOSE DPS 1 Status: intermediate	Range: On, Off, intermediate, Bad
		⇩	
	⇧	RxGOOSE DPS 16 Status: intermediate	Range: On, Off, intermediate, Bad

This menu displays when the product includes an IEC 61850 software option.

6.3.6 Teleprotection inputs

ACTUAL VALUES ⇨ STATUS ⇨⇩ TELEPROTECTION INPUTS

■ TELEPROTECTION ■ INPUTS	⇔	TELEPROTECTION INPUT 1-1: Off	Range: On, Off
		⇩	

⇕	TELEPROTECTION INPUT 1-16: Off	Range: On, Off
⇕	TELEPROTECTION INPUT 2-1: Off	Range: On, Off
⇩		
⇧	TELEPROTECTION INPUT 2-16: Off	Range: On, Off

The present state of teleprotection inputs from communication channels 1 and 2 are shown here. The state displayed is that of corresponding remote output unless the channel is declared failed.

6.3.7 Contact outputs

ACTUAL VALUES ⇨ STATUS ⇨⇩ CONTACT OUTPUTS

■ CONTACT OUTPUTS ■	⇔	Cont Op 1 Off	Range: On, Off, VOff, VOn, IOn, IOff
	⇩		
	⇧	Cont Op xx Off	Range: On, Off, VOff, VOn, IOn, IOff

The present state of the contact outputs is shown here. The first line of a message display indicates the ID of the contact output. For example, 'Cont Op 1' refers to the contact output in terms of the default name-array index. The second line of the display indicates the logic state of the contact output.

For form-A contact outputs, the state of the voltage and current detectors is displayed as Off, VOff, IOff, On, IOn, and VOn. For form-C contact outputs, the state is displayed as Off or On.

6.3.8 Virtual outputs

ACTUAL VALUES ⇨ STATUS ⇨⇩ VIRTUAL OUTPUTS

■ VIRTUAL OUTPUTS ■	⇔	Virt Op 1 Off	Range: On, Off
	⇩		
	⇧	Virt Op 256 Off	Range: On, Off

The present state of each virtual output displays here. The first line of a message display indicates the ID of the virtual output. For example, 'Virt Op 1' refers to the virtual output in terms of the default name-array index. The second line of the display indicates the logic state of the virtual output, as calculated by the FlexLogic equation for that output.

6.3.9 RxGOOSE status

ACTUAL VALUES ⇨ STATUS ⇨⇩ RxGOOSE STATUS

■ RxGOOSE ■ STATUS	⇔	All RxGOOSE Online: Yes	Range: Yes, No
	⇕	RxGOOSE 1 Status: Offline	Range: Online, Offline
	⇩		
	⇧	RxGOOSE 64 Status: Offline	Range: Online, Offline

This menu displays when the product includes an IEC 61850 software option.

The **All RxGOOSE Online** actual value does not consider RxGOOSE that are not configured or are not used by any RxGOOSE Input.

If fixed GOOSE is configured, the **All RxGOOSE Online** actual value reflects the status of both the configurable GOOSE subscriptions and the fixed GOOSE subscriptions. For **All RxGOOSE Online** status to have the value "Yes", all **RxGOOSE x Status** actual values must be "Online" and the fixed GOOSE **All Remote Devices Online** status must have the value "Yes".

6.3.10 RxGOOSE statistics

ACTUAL VALUES ⇨ STATUS ⇨⇩ RxGOOSE STATISTICS ⇨⇩ RxGOOSE 1(64)

■ RxGOOSE 1 ■	⇔	RxGOOSE 1 stNum 0	Range: 0 up to 4,294,967,295
	⇧	RxGOOSE 1 sqNum 0	Range: 0 up to 4,294,967,295

This menu displays when the product includes an IEC 61850 software option.

stNum — State number. The most recently received value in GOOSE message field stNum. The publisher increments stNum each time that the state of one or more of the GOOSE message members is sent with a revised value.

sqNum — Sequence number. The most recently received value in GOOSE message field sqNum. The publisher sets sqNum to zero each time the state of one or more of the GOOSE message members is sent with a new value, and it increments it whenever a GOOSE message is resent without any member value change.

6

6.3.11 Fixed GOOSE

6.3.11.1 Remote devices

ACTUAL VALUES ⇨ STATUS ⇨⇩ FIXED GOOSE ⇨⇩ REMOTE DEVICES STATUS

■ REMOTE DEVICE ■ STATUS	⇔	ALL REMOTE DEVICES ONLINE: Yes	Range: Yes, No
	⇩	REMOTE DEVICE 1 STATUS: Off	Range: Online, Offline
	⇧	REMOTE DEVICE 16 STATUS: Off	Range: On, Off

Displays the present state of the programmed remote devices.

ALL REMOTE DEVICES ONLINE — Indicates whether all programmed devices are online or not. If the state is **"No"**, then at least one required remote device is not online.

ACTUAL VALUES ⇨ STATUS ⇨⇩ FIXED GOOSE ⇨⇩ REMOTE DEVICES STATISTICS ⇨ REMOTE DEVICE 1(16)

■ REMOTE DEVICE 1 ■	⇔	REMOTE DEVICE 1 stNum: 0	Range: 0 to 4,294,967,295
	⇧	REMOTE DEVICE 1 sqNum: 0	Range: 0 to 4,294,967,295

REMOTE DEVICES 1 stNum — This indicates the most recently received value in the received Fixed GOOSE message field stNum (state number). The publisher increments stNum each time that the state of one or more of the Fixed GOOSE message members is sent with a revised value.

REMOTE DEVICES 1 sqNum — This indicates the most recently received value in the received Fixed GOOSE message field sqNum (sequence number). The publisher sets sqNum to zero each time the state of one or more of the GOOSE message members is sent with a new value, and it increments it whenever a Fixed GOOSE message is resent without any member value change.

This number rolls over to zero when the maximum count of 4,294,967,295 is reached.

6.3.11.2 Remote inputs

ACTUAL VALUES ⇨ STATUS ⇨⇩ FIXED GOOSE ⇨⇩ REMOTE INPUTS ⇨⇩ REMOTE INPUT 1(64)

■ REMOTE INPUTS ■	⇔	REMOTE INPUT 1 STATUS Off	Range: On, Off
	⇩	REMOTE INPUT 2 STATUS Off	Range: On, Off
	⇩		
	⇧	REMOTE INPUT 64 STATUS: Off	Range: On, Off

6.3.12 Digital counters

ACTUAL VALUES ⇨ STATUS ⇨⇩ DIGITAL COUNTERS ⇨ DIGITAL COUNTERS Counter 1(8)

■ DIGITAL COUNTERS ■ Counter 1	⇔	Counter 1 ACCUM: 0	
	⇩	Counter 1 FROZEN: 0	
	⇩	Counter 1 FROZEN: 1970/01/01 00:00:00	Range: YYYY/MM/DD HH:MM:SS
	⇧	Counter 1 MICROS: 0	Range: 0 to 4294967295 in steps of 1

The present status of the eight digital counters displays here. The status of each counter, with the user-defined counter name, includes the accumulated and frozen counts (the count units label also appears). Also included, is the date and time stamp for the frozen count. The **COUNTER 1 MICROS** value refers to the microsecond portion of the time stamp.

6.3.13 Breaker status

ACTUAL VALUES ⇨ STATUS ⇨⇩ BREAKERS

■ BREAKERS ■	⇔	BREAKER 1 ΦA/3P STATE: N/A	Range: N/A, Opened, Closed, Alert
	⇩	BREAKER 1 ΦB STATE: N/A	Range: N/A, Opened, Closed, Alert
	⇩	BREAKER 1 ΦC STATE: N/A	Range: N/A, Opened, Closed, Alert
	⇩		
	⇩	BREAKER x ΦA/3P STATE: N/A	Range: N/A, Opened, Closed, Alert
	⇩	BREAKER x ΦB STATE: N/A	Range: N/A, Opened, Closed, Alert

⇧	**BREAKER 1 ΦC STATE:** **N/A**	Range: N/A, Opened, Closed, Alert

"N/A" is shown when **BREAKER 1 FUNCTION** is "Disabled".

"Closed" is shown when the breaker is closed.

"Opened" is shown when the breaker is opened.

"Alert" is the state that represents one of the following breaker conditions:

- Bad
- Intermediate
- Racked-out
- Out of Service
- Pole Discrepancy
- Trouble

6.3.14 Selector switches

ACTUAL VALUES ⇨ STATUS ⇨⇩ SELECTOR SWITCHES

■ **SELECTOR SWITCHES** ■	⇔	**SELECTOR SWITCH 1** **POSITION: 0/7**	Range: Current Position / 7
	⇧	**SELECTOR SWITCH 2** **POSITION: 0/7**	Range: Current Position / 7

The display shows both the current position and the full range. The current position only (an integer from 0 through 7) is the actual value.

6.3.15 Flex States

ACTUAL VALUES ⇨ STATUS ⇨⇩ FLEX STATES

■ **FLEX STATES** ■	⇔	**PARAM 1: Off** **Off**	Range: On, Off
		⇩	
	⇧	**PARAM 256: Off** **Off**	Range: On, Off

There are 256 FlexState™ bits available. The second line value indicates the state of the given FlexState bit.

6.3.16 Ethernet

ACTUAL VALUES ⇨ STATUS ⇨⇩ ETHERNET

■ **ETHERNET** ■	⇔	**ETHERNET PRI LINK** **STATUS: Fail**	Range: Fail, OK
	⇩	**ETHERNET SEC LINK** **STATUS: OK**	Range: Fail, OK
	⇧	**ETHERNET TER LINK** **STATUS: Fail**	Range: Fail, OK

These values indicate the status of the first, second, and third Ethernet ports.

6.3.17 Real time clock synchronizing

ACTUAL VALUES ⇨ PROCESS BUS MODULE ⇨⇩ TIME SYNC

■ REAL TIME CLOCK ■ SYNCHRONIZING	⇔	**RTC SYNC SOURCE:** **None**	Range: None, Port 1(3) PTP Clock, IRIG-B, Other, Process Bus Module Clock, SNTP1, SNTP2
	⇩	**GRANDMASTER ID:** **0000000000000000**	Range: any 8 octet value
	⇩	**ACCURACY:** **999999999 ns**	Range: 0 to 999,999,999 ns
	⇩	**PBM SW1 PTP State:** **DISABLED**	Range: Disabled, No Signal, Calibrating, Synchronized, Qualifying, Idea, Master
	⇩	**PBM SW2 PTP State:** **DISABLED**	Range: Disabled, No Signal, Calibrating, Synchronized, Qualifying, Idea, Master
	⇩	**PORT 1 PTP STATE:** **No Signal**	Range: Disabled, No Signal, Calibrating, Synch'd (No Pdelay), Synchronized
	⇩	**PORT 2 PTP STATE:** **No Signal**	Range: Disabled, No Signal, Calibrating, Synch'd (No Pdelay), Synchronized
	⇩	**PORT 3 PTP STATE:** **No Signal**	Range: Disabled, No Signal, Calibrating, Synch'd (No Pdelay), Synchronized
	⇧	**PTP - IRIG-B DELTA:** **500000000 ns**	Range: -500,000,000 to +500,000,000 ns

SOFTWARE OPTION

This menu displays when the product includes an IEEE 1588 software option.

RTC SYNC SOURCE — The time synchronizing source the relay is using at present. Possible sources include Port 1 PTP Clock to Port 3 PTP Clock. A value of Other means a less precise source (IEC 103, IEC 104, Modbus, DNP). An actual value displays when the relay includes the IEEE 1588 software option.

NOTE

When the **SYNCHRONIZING SOURCE** setting in **Settings > Product Setup > Real Time Clock** is set to "PBM Clock", the **RTC SYNC SOURCE** should also be set to "Process Bus Module Clock".

GRANDMASTER ID — The grandmasterIdentity code being received from the present PTP grandmaster, if any. When the relay is not using any PTP grandmaster, this actual value is zero. The grandmasterIdentity code is specified by PTP to be globally unique, so one can always know which clock is grandmaster in a system with multiple grandmaster-capable clocks.

ACCURACY — The estimated maximum time error at present in the RTC, considering the quality information embedded in the received time signal. The value 999,999,999 indicates that the magnitude of the estimated error is one second or more, or that the error cannot be estimated.

PORT 1...3 PTP STATE — The present state of the port's PTP clock. The PTP clock state is:

- **Disabled** if the port's function setting is Disabled
- **No Signal** if enabled but no signal from an active master has been found and selected
- **Calibrating** if an active master has been selected but lock is not at present established
- **Synch'd (No Pdelay)** if the port is synchronized, but the peer delay mechanism is non-operational
- **Synch'd (Inv UTCoff)** when Synchronized to PTP master with currentUtcOffsetValid =False
- **Synch'd (Nopd INVoff)** if the port is synchronized, but the peer delay mechanism is non-operational and PTP master has currentUtcOffsetValid =False
- **Synchronized** if synchronized

PTP - IRIG-B DELTA — The time difference, measured in nanoseconds, between the fractional seconds portion of the time being received via PTP and that being received via IRIG-B. A positive value indicates that PTP time is fast compared to IRIG-B time.

6.3.18 Direct inputs

ACTUAL VALUES ⇨ STATUS ⇨⇩ DIRECT INPUTS

```
■ DIRECT INPUTS
■
```

⇔

```
AVERAGE MSG RETURN
TIME CH1:  0 ms
```

⇕

```
UNRETURNED MSG
COUNT CH1:        0
```

⇕

```
CRC FAIL COUNT
CH1:       0
```

⇕

```
AVERAGE MSG RETURN
TIME CH2:  0 ms
```

⇕

```
UNRETURNED MSG
COUNT CH2:        0
```

⇕

```
CRC FAIL COUNT
CH2:       0
```

⇕

```
DIRECT INPUT  1
On
```

⇩

⇧

```
DIRECT INPUT 64
On
```

The **AVERAGE MSG RETURN TIME** is the time taken for direct output messages to return to the sender in a direct input/output ring configuration (this value is not applicable for non-ring configurations). This is a rolling average calculated for the last ten messages. There are two return times for dual-channel communications modules.

The **UNRETURNED MSG COUNT** values (one per communications channel) count the direct output messages that do not make the trip around the communications ring. The **CRC FAIL COUNT** values (one per communications channel) count the direct output messages that have been received but fail the CRC check. High values for either of these counts can indicate on a problem with wiring, the communication channel, or one or more relays. The **UNRETURNED MSG COUNT** and **CRC FAIL COUNT** values can be cleared using the **CLEAR DIRECT I/O COUNTERS** command.

The **DIRECT INPUT 1** to **DIRECT INPUT** values represent the state of each direct input.

6.3.19 Direct devices status

ACTUAL VALUES ⇨ STATUS ⇨⇩ DIRECT DEVICES STATUS

```
■ DIRECT DEVICES
■ STATUS
```

⇔

```
DIRECT DEVICE 1
STATUS:  Offline
```

Range: Offline, Online

⇩

⇧

```
DIRECT DEVICE 16
STATUS:  Offline
```

Range: Offline, Online

These actual values represent the state of direct devices 1 through 16.

6.3.20 Direct integer inputs

ACTUAL VALUES ⇨⇩ STATUS ⇨⇩ DIRECT INTEGER INPUTS

■ DIRECT INTEGER ■ INPUTS	⇔	UINT INPUT 1 0
		⇩
	⇧	UINT INPUT 16 0

The direct integer input data points display in this menu. They are received via direct input and output messages sent from other devices.

6.3.21 Teleprotection channel tests

ACTUAL VALUES ⇨ STATUS ⇨⇩ TELEPROT CH TESTS

■ TELEPROT CH TESTS ■	⇔	CHANNEL 1 STATUS: n/a	Range: n/a, FAIL, OK
	⇩	CHANNEL 1 LOST PACKETS: 1	Range: 1 to 65535 in steps of 1
	⇩	CHANNEL 2 STATUS: n/a	Range: n/a, FAIL, OK
	⇩	CHANNEL 2 LOST PACKETS: 1	Range: 1 to 65535 in steps of 1
	⇧	VALIDITY OF CHANNEL CONFIGURATION: FAIL	Range: n/a, FAIL, OK

The status information for two channels is shown here.

CHANNEL 1 STATUS — This represents the receiver status of each channel. If the value is "OK," teleprotection is enabled and data is being received from the remote terminal; If the value is "FAIL," teleprotection enabled and data is not being received from the remote terminal. If "n/a," teleprotection is disabled.

CHANNEL 1 LOST PACKETS — Data is transmitted to the remote terminals in data packets at a rate of two packets per cycle. The number of lost packets represents data packets lost in transmission; this count can be reset to 0 through the **COMMANDS ⇨⇩ CLEAR RECORDS** menu.

VALIDITY OF CHANNEL CONFIGURATION — This value displays the current state of the communications channel identification check, and hence validity. If a remote relay ID does not match the programmed ID at the local relay, the "FAIL" message displays. The "N/A" value appears if the local relay ID is set to a default value of "0," the channel is failed, or if the teleprotection inputs/outputs are not enabled.

6.3.22 Remaining connection status

ACTUAL VALUES ⇨ STATUS ⇨⇩ COMM STATUS REMAINING CONNECT

■ COMM STATUS ■ REMAINING CONNECT	⇔	MMS TCP (max 6) 6	Range: 0 to 6
	⇩	Modbus TCP (max 4) 4	Range: 0 to 4
	⇩	DNP TCP (max 2) 2	Range: 0 to 2
	⇩	IEC-104 TCP (max 2) 2	Range: 0 to 2

⇕	**PMU TCP** **1**	Range: 1 to 4
⇧	**SFTP (max 4)** **4**	Range: 0 to 4

These values specify the remaining number of TCP connections still available for each protocol. The display depends on the options applicable to your device. Each time a connection is used, the remaining number of connections decrements. When released, the remaining number of connections increments. If no connection is made over the specific protocol, the number equals the maximum number available for the specific protocol.

For example, the maximum number of Modbus TCP connections is 4. Once an EnerVista session is opened on a computer connected to the UR over Ethernet, the Modbus TCP status shows 3. If the EnerVista application is closed, the Modbus TCP status shows 4.

For the graphical front panel, the remaining connections refer to TCP connections only.

MMS TCP — The number of IEC 61850 connections remaining.

PMU TCP — The maximum number of PMU TCP connections matches the number of aggregators. The maximum number of aggregators for the N60 is 4. The maximum number for the C60 is 2. The maximum number is 1 for other products with a PMU. The remaining number of aggregators displays here.

6.3.23 Parallel Redundancy Protocol (PRP)

The Parallel Redundancy Protocol (PRP) defines a redundancy protocol for high availability in substation automation networks.

ACTUAL VALUES ⇨ STATUS ⇨⇩ PRP STATUS

■ **PRP STATUS** ■	⇔	**Total Rx Port A:** **0**	Range: 0 to 4G, blank if PRP disabled
	⇕	**Total Rx Port B:** **0**	Range: 0 to 4G, blank if PRP disabled
	⇕	**Total Errors Port A:** **0**	Range: 0 to 4G, blank if PRP disabled
	⇕	**Total Errors Port A:** **0**	Range: 0 to 4G, blank if PRP disabled
	⇕	**Mismatches Port B:** **0**	Range: 0 to 4G, blank if PRP disabled
	⇕	**Mismatches Port B:** **0**	Range: 0 to 4G, blank if PRP disabled
	⇕	**FER Port A:** **0**	Range: 0 t0 4G
	⇕	**FER Port B:** **0**	Range: 0 t0 4G
	⇕	**Link Active Port A:** **No**	Range: Yes, No
	⇧	**Link Active Port B:** **No**	Range: Yes, No

SOFTWARE OPTION

This menu displays when the product includes a PRP software option.

Total Received Port A is a counter for total messages received (either from DANPs or from SANs) on Port A.

Total Received Port B is a counter for total messages received (either from DANPs or from SANs) on Port B.

Total Errors is a counter for total messages received with an error (bad port code, frame length too short).

Mismatches Port A is a counter for total messages received with an error on Port A (PRP frame, but port received through and LAN ID in the frame do not match).

Mismatches Port B is a counter for total messages received with an error on Port B (PRP frame, but port received through and LAN ID in the frame do not match).

6.3.24 TxGOOSE status

ACTUAL VALUES ⇨ STATUS ⇨⇩ TxGOOSE STATUS

■ **TxGOOSE STATUS** ■	⇔	**R-TxGOOSE 1** **ARP: Off**	Range: On, Off
		⇩	
	⇧	**R-TxGOOSE 16** **ARP: Off**	Range: On, Off

SOFTWARE OPTION

This menu displays when the product includes an IEC 61850 software option.

This status is relevant to R-GOOSE reception when configured for SSM or ASM reception modes. It is not relevant for GOOSE or for R-GOOSE in unicast reception mode.

ARP — The unicast mode of R-GOOSE transmission requires Address Resolution Protocol (ARP) for the resolution of the network layer address into the MAC layer address. R-TxGOOSE## ARP status On indicates that ARP responses are being received and the destination MAC address for R-GOOSE transmissions has been obtained. This status remains Off if TxGOOSE## is not configured for R-GOOSE. It also remains Off if setting R-TxGOOSE1 DST IP is set to a multicast address. In the case where setting R-TxGOOSE1 DST IP is configured with a unicast address and this status indicates Off, TxGOOSE## transmission will be off, and therefore communication network diagnosis needs to be carried out.

This status is only applicable for R-GOOSE transmission with setting R-TxGOOSE1 DST IP set to a unicast IP address. It is not applicable for GOOSE or for R-GOOSE when setting R-TxGOOSE1 DST IP is multicast.

6.3.25 Protocol

ACTUAL VALUES ⇨ STATUS ⇨⇩ PROTOCOL

■ **PROTOCOL** ■	⇔	**IEC61850 EDITION:** **Edition2**	Range: Edition1, Edition2

SOFTWARE OPTION

This menu displays when the product includes an IEC 61850 software option.

Displays the IEC 61850 edition currently being used, as set under **Settings > Product Setup > Communications > Protocol > IEC61850 Edition**. This value displays only on the front panel.

6.4 Metering

6.4.1 Metering conventions

6.4.1.1 UR convention for measuring power and energy

The figure illustrates the conventions established for use in UR devices.

Figure 6-3: Flow direction of signed values for watts and VARs

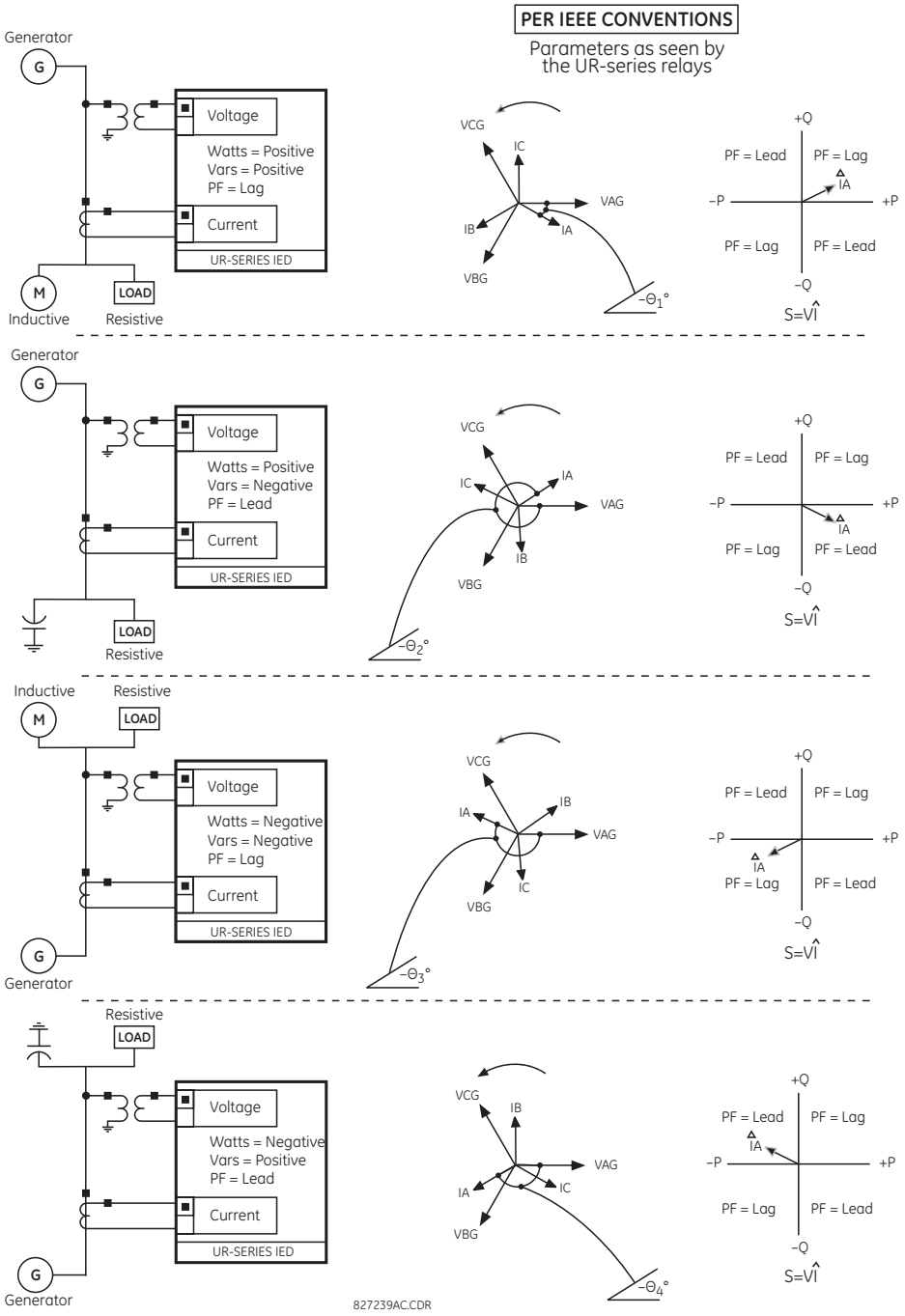

6.4.1.2 UR convention for measuring phase angles

All phasors calculated by URs and used for protection, control and metering functions are rotating phasors that maintain the correct phase angle relationships with each other at all times.

For display and oscillography purposes, all phasor angles in a given relay are referred to an AC input channel pre-selected by the **SETTINGS ⇨⇩ SYSTEM SETUP ⇨⇩ POWER SYSTEM ⇨⇩ FREQUENCY AND PHASE REFERENCE** setting. This setting defines a particular AC signal source to be used as the reference.

If the AC signal pre-selected by the relay upon configuration is not measurable, the phase angles are not referenced. The phase angles are assigned as positive in the leading direction, and are presented as negative in the lagging direction, to more closely align with power system metering conventions. The figure illustrates this.

Figure 6-4: UR phase angle measurement convention

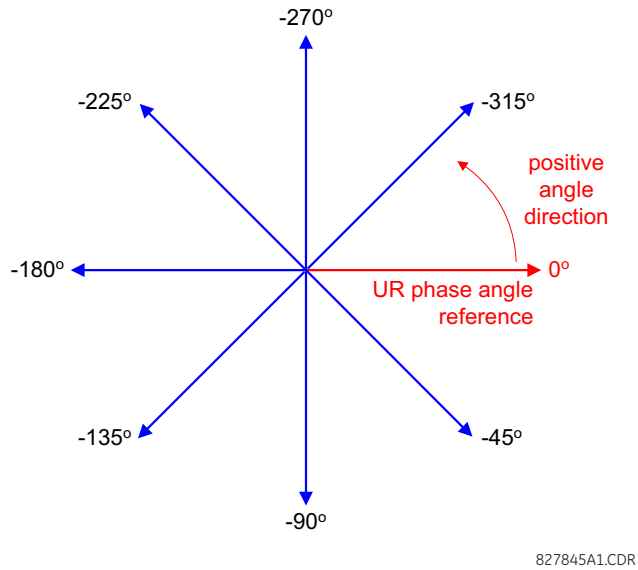

6.4.1.3 UR convention for measuring symmetrical components

The URs calculate voltage symmetrical components for the power system phase A line-to-neutral voltage, and symmetrical components of the currents for the power system phase A current. Owing to the above definition, phase angle relations between the symmetrical currents and voltages stay the same irrespective of the connection of instrument transformers. This is important for setting directional protection elements that use symmetrical voltages.

For display and oscillography purposes the phase angles of symmetrical components are referenced to a common reference as described in the previous sub-section.

WYE-connected instrument transformers

- ABC phase rotation:

$$V_0 = \frac{1}{3}(V_{AG} + V_{BG} + V_{CG})$$

$$V_1 = \frac{1}{3}(V_{AG} + aV_{BG} + a^2V_{CG})$$

$$V_2 = \frac{1}{3}(V_{AG} + a^2V_{BG} + aV_{CG})$$

- ACB phase rotation:

$$V_0 = \frac{1}{3}(V_{AG} + V_{BG} + V_{CG})$$

$$V_1 = \frac{1}{3}(V_{AG} + a^2V_{BG} + aV_{CG})$$

$$V_2 = \frac{1}{3}(V_{AG} + aV_{BG} + a^2V_{CG})$$

The above equations apply to currents as well.

DELTA-connected instrument transformers

- ABC phase rotation:

$$V_0 = N/A$$
$$V_1 = \frac{1\angle -30^\circ}{3\sqrt{3}}(V_{AB} + aV_{BC} + a^2V_{CA})$$
$$V_2 = \frac{1\angle 30^\circ}{3\sqrt{3}}(V_{AB} + a^2V_{BC} + aV_{CA})$$

- ACB phase rotation:

$$V_0 = N/A$$
$$V_1 = \frac{1\angle 30^\circ}{3\sqrt{3}}(V_{AB} + a^2V_{BC} + aV_{CA})$$
$$V_2 = \frac{1\angle -30^\circ}{3\sqrt{3}}(V_{AB} + aV_{BC} + a^2V_{CA})$$

The zero-sequence voltage is not measurable under the Delta connection of instrument transformers and is defaulted to zero. The table below shows an example of symmetrical components calculations for the ABC phase rotation.

Table 6-1: Symmetrical components calculation example

SYSTEM VOLTAGES, sec. V *						VT conn.	relay INPUTS, sec. V			SYMM. COMP, sec. V		
V_{AG}	V_{BG}	V_{CG}	V_{AB}	V_{BC}	V_{CA}		F5ac	F6ac	F7ac	V_0	V_1	V_2
13.9 ∠0°	76.2 ∠–125°	79.7 ∠–250°	84.9 ∠–313°	138.3 ∠–97°	85.4 ∠–241°	WYE	13.9 ∠0°	76.2 ∠–125°	79.7 ∠–250°	19.5 ∠–192°	56.5 ∠–7°	23.3 ∠–187°
UNKNOWN (only V_1 and V_2 can be determined)			84.9 ∠0°	138.3 ∠–144°	85.4 ∠–288°	DELTA	84.9 ∠0°	138.3 ∠–144°	85.4 ∠–288°	N/A	56.5 ∠–54°	23.3 ∠–234°

* The power system voltages are phase-referenced – for simplicity – to V_{AG} and V_{AB}, respectively. This, however, is a relative matter. It is important to remember that the N60 displays are always referenced as specified under **SETTINGS ⇨⇩ SYSTEM SETUP ⇨⇩ POWER SYSTEM ⇨⇩ FREQUENCY AND PHASE REFERENCE**.

The example above is illustrated in the following figure.

Figure 6-5: Measurement convention for symmetrical components

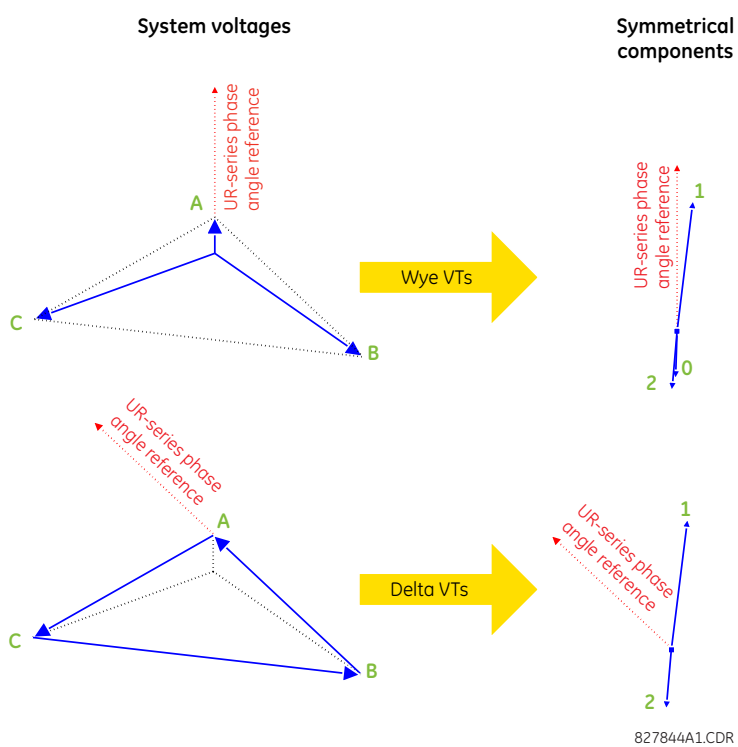

6.4.2 Sources

6.4.2.1 Menu

ACTUAL VALUES ⇨⇩ METERING ⇨⇩ SOURCE SRC 1

■ SOURCE SRC 1 ■	⇔	■ PHASE CURRENT ■ SRC 1	See below
	⇩	■ GROUND CURRENT ■ SRC 1	See page 6-20
	⇩	■ PHASE VOLTAGE ■ SRC 1	See page 6-20
	⇩	■ AUXILIARY VOLTAGE ■ SRC 1	See page 6-21
	⇩	■ POWER ■ SRC 1	See page 6-21
	⇩	■ ENERGY ■ SRC 1	See page 6-22
	⇩	■ DEMAND ■ SRC 1	See page 6-22
	⇩	■ FREQUENCY ■ SRC 1	See page 6-23
	⇩	■ CURRENT HARMONICS ■ SRC 1	See page 6-24
	⇧	■ VOLTAGE HARMONICS ■ SRC 1	See page 6-24

This menu displays the metered values available for each source.

Metered values presented for each source depend on the phase and auxiliary VTs and phase and ground CTs assignments for this particular source. For example, if no phase VT is assigned to this source, then any voltage, energy, and power values are unavailable.

6

6.4.2.2 Phase current metering

ACTUAL VALUES ⇨⇩ METERING ⇨ SOURCE SRC 1 ⇨ PHASE CURRENT

■ PHASE CURRENT ■ SRC 1	⇔	SRC 1 RMS Ia: 0.000 b: 0.000 c: 0.000 kA
	⇩	SRC 1 RMS Ia: 0.000 kA
	⇩	SRC 1 RMS Ib: 0.000 kA
	⇩	SRC 1 RMS Ic: 0.000 kA
	⇩	SRC 1 RMS In: 0.000 kA
	⇩	SRC 1 PHASOR Ia: 0.000 kA 0.0°
	⇩	SRC 1 PHASOR Ib: 0.000 kA 0.0°
	⇩	SRC 1 PHASOR Ic: 0.000 kA 0.0°

```
⇕  SRC 1  PHASOR In:
    0.000 kA        0.0°

⇕  SRC 1  ZERO SEQ I0:
    0.000 kA        0.0°

⇕  SRC 1  POS SEQ I1:
    0.000 kA        0.0°

⇧  SRC 1  NEG SEQ I2:
    0.000 kA        0.0°
```

The metered phase current values are displayed in this menu. The "SRC 1" text gets replaced by whatever name was programmed by the user for the associated source (see **SETTINGS ⇨⇩ SYSTEM SETUP ⇨⇩ SIGNAL SOURCES**).

6.4.2.3 Ground current metering

ACTUAL VALUES ⇨⇩ METERING ⇨ SOURCE SRC 1 ⇨ GROUND CURRENT

```
■ GROUND CURRENT
■ SRC 1

⇔  SRC 1  RMS Ig:
    0.0  A

⇕  SRC 1  PHASOR Ig:
    0.0  A      0.0°

⇧  SRC 1  PHASOR Igd:
    0.000  kA      0.0°
```

The metered ground current values are displayed in this menu. The "SRC 1" text is replaced by the name programmed by the user for the associated source (see **SETTINGS ⇨⇩ SYSTEM SETUP ⇨⇩ SIGNAL SOURCES**).

6.4.2.4 Phase voltage metering

ACTUAL VALUES ⇨⇩ METERING ⇨ SOURCE SRC 1 ⇨ PHASE VOLTAGE

```
■ PHASE VOLTAGE
■ SRC 1

⇔  SRC 1  RMS Vag:
    0.0  V

⇕  SRC 1  RMS Vbg:
    0.0  V

⇕  SRC 1  RMS Vcg:
    0.0  V

⇕  SRC 1  PHASOR Vag:
    0.0  V      0.0°

⇕  SRC 1  PHASOR Vbg:
    0.0  V      0.0°

⇕  SRC 1  PHASOR Vcg:
    0.0  V      0.0°

⇕  SRC 1  RMS Vab:
    0.0  V

⇕  SRC 1  RMS Vbc:
    0.0  V

⇕  SRC 1  RMS Vca:
    0.0  V

⇕  SRC 1  PHASOR Vab:
    0.0  V      0.0°

⇕  SRC 1  PHASOR Vbc:
    0.0  V      0.0°
```

```
⇕ SRC 1  PHASOR Vca:
    0.0  V      0.0°
⇕ SRC 1  ZERO SEQ V0:
    0.0  V      0.0°
⇕ SRC 1  POS SEQ V1:
    0.0  V      0.0°
⇧ SRC 1  NEG SEQ V2:
    0.0  V      0.0°
```

The metered phase voltage values are displayed in this menu. The "SRC 1" text is replaced by the name programmed by the user for the associated source (see **SETTINGS ⇨⇩ SYSTEM SETUP ⇨⇩ SIGNAL SOURCES**).

6.4.2.5 Auxiliary voltage metering

ACTUAL VALUES ⇨⇩ METERING ⇨ SOURCE SRC 1 ⇨⇩ AUXILIARY VOLTAGE

```
■ AUXILIARY VOLTAGE
■ SRC 1
⇔ SRC 1  RMS Vx:
    0.00  V
⇧ SRC 1  PHASOR Vx:
    0.00  V      0.0°
```

The metered auxiliary voltage values are displayed in this menu. The "SRC 1" text is replaced by the name programmed by the user for the associated source (see **SETTINGS ⇨⇩ SYSTEM SETUP ⇨⇩ SIGNAL SOURCES**).

6.4.2.6 Power metering

ACTUAL VALUES ⇨⇩ METERING ⇨ SOURCE SRC 1 ⇨⇩ POWER

```
■ POWER
■ SRC 1
⇔ SRC 1  REAL POWER
  3ϕ:  0.000 kW
⇕ SRC 1  REAL POWER
  ϕa:  0.000 kW
⇕ SRC 1  REAL POWER
  ϕb:  0.000 kW
⇕ SRC 1  REAL POWER
  ϕc:  0.000 kW
⇕ SRC 1  REACTIVE PWR
  3ϕ:  0.000 kvar
⇕ SRC 1  REACTIVE PWR
  ϕa:  0.000 kvar
⇕ SRC 1  REACTIVE PWR
  ϕb:  0.000 kvar
⇕ SRC 1  REACTIVE PWR
  ϕc:  0.000 kvar
⇕ SRC 1  APPARENT PWR
  3ϕ:  0.000 kVA
⇕ SRC 1  APPARENT PWR
  ϕa:  0.000 kVA
⇕ SRC 1  APPARENT PWR
  ϕb:  0.000 kVA
⇕ SRC 1  APPARENT PWR
  ϕc:  0.000 kVA
```

6

```
⇕  SRC 1  POWER FACTOR
   3ϕ:     1.000

⇕  SRC 1  POWER FACTOR
   ϕa:     1.000

⇕  SRC 1  POWER FACTOR
   ϕb:     1.000

⇧  SRC 1  POWER FACTOR
   ϕc:     1.000
```

This menu displays metered values for real, reactive, and apparent power, as well as power factor. The "SRC 1" text is replaced by the name programmed by the user for the associated source (see **SETTINGS ⇨⇩ SYSTEM SETUP ⇨⇩ SIGNAL SOURCES**).

When VTs are configured in wye, the N60 calculates power in each phase and three-phase power is measured as

$$S = V_A \times \hat{I}_A + V_B \times \hat{I}_B + V_C \times \hat{I}_C \qquad \textbf{Eq. 6-1}$$

When VTs are configured in delta, the N60 does not calculate power in each phase and three-phase power is measured as

$$S = V_{AB} \times \hat{I}_A + V_{CB} \times \hat{I}_C \qquad \textbf{Eq. 6-2}$$

where

S is the apparent power

V_A, V_B, V_C, I_A, I_B, I_C are phase voltage and phase current phasors

V_{AB} and V_{CB} are phase-to-phase voltage phasors

$\hat{I}$ is the conjugate of I

6.4.2.7 Energy metering

ACTUAL VALUES ⇨⇩ METERING ⇨ SOURCE SRC 1 ⇨⇩ ENERGY

```
■ ENERGY
■ SRC 1

⇔  SRC 1  POS WATTHOUR:
   0.000  MWh

⇕  SRC 1  NEG WATTHOUR:
   0.000  Wh

⇕  SRC 1  POS VARHOUR:
   0.000  varh

⇧  SRC 1  NEG VARHOUR:
   0.000  mvarh
```

This menu displays metered values for real and reactive energy. The "SRC 1" text is replaced by the name programmed by the user for the associated source (see **SETTINGS ⇨⇩ SYSTEM SETUP ⇨⇩ SIGNAL SOURCES**). Because energy values are accumulated, record them and then reset them immediately prior to changing CT or VT characteristics.

6.4.2.8 Demand metering

ACTUAL VALUES ⇨⇩ METERING ⇨ SOURCE SRC 1 ⇨⇩ DEMAND

```
■ DEMAND
■ SRC 1

⇔  SRC 1  DMD IA:
   0.000  kA

⇕  SRC 1  DMD IA MAX:
   0.000  kA

⇕  SRC 1  DMD IA DATE:
   2020/07/31 16:30:07

⇕  SRC 1  DMD IB:
   0.000  kA
```

```
⇕ SRC 1  DMD IB MAX:
   0.000  kA

⇕ SRC 1  DMD IB DATE:
  2020/07/31 16:30:07

⇕ SRC 1  DMD IC:
   0.000  kA

⇕ SRC 1  DMD IC MAX:
   0.000  kA

⇕ SRC 1  DMD IC DATE:
  2020/07/31 16:30:07

⇕ SRC 1  DMD W:
   0.000  kW

⇕ SRC 1  DMD W MAX:
   0.000  kW

⇕ SRC 1  DMD W DATE:
  2020/07/31 16:30:07

⇕ SRC 1  DMD VAR:
   0.000  kvar

⇕ SRC 1  DMD VAR MAX:
   0.000  kvar

⇕ SRC 1  DMD VAR DATE:
  2020/07/31 16:30:07

⇕ SRC 1  DMD VA:
   0.000  kVA

⇕ SRC 1  DMD VA MAX:
   0.000  kVA

⇧ SRC 1  DMD VA DATE:
  2020/07/31 16:30:07
```

This menu displays metered values for current and power demand. The "SRC 1" text is replaced by the name programmed by the user for the associated source (see **SETTINGS ⇨⇩ SYSTEM SETUP ⇨⇩ SIGNAL SOURCES**).

The relay measures (absolute values only) the source demand on each phase and average three phase demand for real, reactive, and apparent power. These parameters can be monitored to reduce supplier demand penalties or for statistical metering purposes. Demand calculations are based on the measurement type selected in the **SETTINGS ⇨ PRODUCT SETUP ⇨⇩ DEMAND** menu. For each quantity, the relay displays the demand over the most recent demand time interval, the maximum demand since the last maximum demand reset, and the time and date stamp of this maximum demand value. Maximum demand quantities can be reset to zero with the **CLEAR RECORDS ⇨⇩ CLEAR DEMAND RECORDS** command.

6.4.2.9 Frequency metering

ACTUAL VALUES ⇨⇩ METERING ⇨ SOURCE SRC 1 ⇨⇩ FREQUENCY

```
■ FREQUENCY
■ SRC 1
```

⇔

```
SRC 1  FREQUENCY:
 0.000 Hz
```

The metered frequency values are displayed in this menu. The "SRC 1" text is replaced by the name programmed by the user for the associated source (see **SETTINGS ⇨⇩ SYSTEM SETUP ⇨⇩ SIGNAL SOURCES**).

SOURCE FREQUENCY is measured via software-implemented zero-crossing detection of an AC signal. The signal is either a Clarke transformation of three-phase voltages or currents, auxiliary voltage, or ground current as per source configuration (see the **SYSTEM SETUP ⇨⇩ POWER SYSTEM** settings). The signal used for frequency estimation is low-pass filtered. The final frequency measurement is passed through a validation filter that eliminates false readings due to signal distortions and transients.

6.4.2.10 Current harmonics and THD metering

ACTUAL VALUES ⇨⇩ METERING ⇨ SOURCE SRC 1 ⇨⇩ CURRENT HARMONICS

```
■ CURRENT HARMONICS      ⇔   SRC 1  THD Ia:  0.0
■ SRC 1                      Ib:  0.0 Ic:  0.0%
                         ⇩   SRC 1  2ND Ia:  0.0
                             Ib:  0.0 Ic:  0.0%
                         ⇩   SRC 1  3RD Ia:  0.0
                             Ib:  0.0 Ic:  0.0%
                             ⇩
                         ⇧   SRC 1  25TH Ia:  0.0
                             Ib:  0.0 Ic:  0.0%
```

This menu displays metered current harmonics values. The "SRC 1" text is replaced by the name was programmed for the associated source (see **SETTINGS ⇨⇩ SYSTEM SETUP ⇨⇩ SIGNAL SOURCES**). Current harmonics are measured for each source for the total harmonic distortion (THD) and 2nd to 25th harmonics per phase.

6.4.2.11 Voltage harmonics and THD metering

ACTUAL VALUES ⇨⇩ METERING ⇨ SOURCE SRC 1 ⇨⇩ VOLTAGE HARMONICS

```
■ VOLTAGE HARMONICS      ⇔   SRC 1  THD Va:  0.0
■ SRC 1                      Vb:  0.0 Vc:  0.0%
                         ⇩   SRC 1  2ND Va:  0.0
                             Vb:  0.0 Vc:  0.0%
                         ⇩   SRC 1  3RD Va:  0.0
                             Vb:  0.0 Vc:  0.0%
                             ⇩
                         ⇧   SRC 1  25TH Va:  0.0
                             Vb:  0.0 Vc:  0.0%
```

6

This menu displays metered voltage harmonics values. The “SRC 1” text is replaced by the programmed name for the associated source (see the **SETTINGS ⇨⇩ SYSTEM SETUP ⇨⇩ SIGNAL SOURCES** menu).

To extract the 2nd to 25th voltage harmonics, each harmonic is computed on a per-phase basis, where:

N = 64 is the number of samples per cycle
$\omega_0 = 2\pi f$ is the angular frequency based on the system frequency (50 or 60 Hz)
k = 1, 2,..., N – 1 is the index over one cycle for the Fast Fourier Transform (FFT)
m is the last sample number for the sliding window
h = 1, 2,..., 25 is the harmonic number

The short-time Fourier transform is applied to the unfiltered signal:

$$F_{real}(m,h) = \frac{2}{N}\sum_k (f(m-k)\cdot\cos(h\cdot\omega_0\cdot t(k)))$$

$$F_{imag}(m,h) = \frac{2}{N}\sum_k (f(m-k)\cdot\sin(h\cdot\omega_0\cdot t(k)))$$

$$F_{ampl}(m,h) = \sqrt{F_{real}(m,h)^2 + F_{imag}(m,h)^2} \qquad \textbf{Eq. 6-3}$$

The harmonics are a percentage of the fundamental signal obtained as a ratio of harmonic amplitude to fundamental amplitude multiplied by 100%. The total harmonic distortion (THD) is the ratio of the total harmonic content to the fundamental:

$$THD = \sqrt{F_2^2 + F_3^2 + \ldots + F_{25}^2} \qquad \textbf{Eq. 6-4}$$

NOTE

Voltage harmonics are calculated only for Wye connected phase VTs. Ensure that the **SYSTEM SETUP ⇨ AC INPUTS ⇨⇩ VOLTAGE BANK F5 ⇨⇩ PHASE VT XX CONNECTION** setting is "Wye" to enable voltage harmonics metering.

6.4.3 Synchrocheck

ACTUAL VALUES ⇨⇩ METERING ⇨ SYNCHROCHECK ⇨⇩ SYNCHROCHECK1(6)

■ SYNCHROCHECK1 ■	⇔	SYNCHROCHECK 1 DELTA VOLT: 0.000 kV
	⇩	SYNCHROCHECK 1 DELTA FREQ: 0.000 Hz
	⇩	SYNCHROCHECK 1 DELTA PHASE: 0.0°
	⇩	SYNCHROCHECK 1 SYNSCP D_PH: 0.0°
	⇩	SYNCHROCHECK 1 V1 MAG: 0.0 V
	⇩	SYNCHROCHECK 1 V1 ANG: 0.0°
	⇩	SYNCHROCHECK 1 V2 MAG: 0.0 V
	⇩	SYNCHROCHECK 1 V2 ANG: 0.0°
	⇩	SYNCHROCHECK 1 PROJ V2 MAG: 0.0 V
	⇩	SYNCHROCHECK 1 PROJ V2 ANG: 0.0°
	⇩	SYNCHROCHECK 1 PROJ DELTA PHASE: 0.0°
	⇧	SYNCHROCHECK 1 PROJ SYNSCP D_PH: 0.0°

If synchrocheck or a setting is "Disabled," the corresponding actual values menu item does not display.

6.4.4 Tracking frequency

ACTUAL VALUES ⇨⇩ METERING ⇨⇩ TRACKING FREQUENCY

■ TRACKING FREQUENCY ■	⇔	TRACKING FREQUENCY: 60.00 Hz
	⇩	ACTIVE FREQ AND PHS REF: MAIN
	⇩	MAIN REF FREQUENCY: 60.00 Hz
	⇩	ALT REF FREQUENCY: 60.00 Hz

The Tracking Frequency and the Active Frequency and Phase Reference are metered as shown here. The tracking frequency is calculated from the signals defined in the Active Frequency and Phase Reference. Note that based on the signal availability and the settings defined in the Main and Alternate Frequency and Phase Reference, the Active Frequency and Phase Reference might be switched between main and alternate frequency reference in runtime.

The frequency calculated in main and alternate reference respectively are also metered as shown here. They will be displayed as 0 if the signal in this reference is lost or it's not configured.

6.4.5 FlexElements

ACTUAL VALUES ⇨⇩ METERING ⇨⇩ FLEXELEMENTS ⇨ FLEXELEMENT 1(16)

■ **FLEXELEMENT 1** ■	⇔	**FLEXELEMENT 1** **OpSig: 0.000**

The operating signals for the FlexElements are displayed in pu values using the following definitions of the base units.

Table 6-2: FlexElement base units

Base unit	Description
DCmA	BASE = maximum value of the **DCMA INPUT MAX** setting for the two transducers configured under the +IN and –IN inputs.
FREQUENCY	f_{BASE} = 1 Hz
FREQUENCY RATE OF CHANGE	df/dt_{BASE} = 1 Hz/s
PHASE ANGLE	φ_{BASE} = 360 degrees (see the UR angle referencing convention)
POWER FACTOR	PF_{BASE} = 1.00
RTDs	BASE = 100°C
SENSITIVE DIR POWER (Sns Dir Power)	P_{BASE} = maximum value of $3 \times V_{BASE} \times I_{BASE}$ for the +IN and –IN inputs of the sources configured for the sensitive power directional element(s).
SOURCE CURRENT	I_{BASE} = maximum nominal primary RMS value of the +IN and –IN inputs
SOURCE ENERGY (Positive and Negative Watthours, Positive and Negative Varhours)	E_{BASE} = 10000 MWh or MVAh, respectively
SOURCE POWER	P_{BASE} = maximum value of $V_{BASE} \times I_{BASE}$ for the +IN and –IN inputs
SOURCE THD & HARMONICS	BASE = 1%
SOURCE VOLTAGE	V_{BASE} = maximum nominal primary RMS value of the +IN and –IN inputs
SYNCHROCHECK (Max Delta Volts)	V_{BASE} = maximum primary RMS value of all the sources related to the +IN and –IN inputs

6.4.6 Digitizer

ACTUAL VALUES ⇨ METERING ⇨⇩ DIGITZER ⇨ DIGITIZER 1(5)

■ **DIGITIZER 1** ■	⇔	**DIGITIZER 1 Out:** **0**	Range: –127 to 127

The digitized output signals are displayed as signed integer numbers.

6.4.7 8-bit comparators

ACTUAL VALUES ⇨⇩ METERING ⇨⇩ 8-BIT COMPARATORS ⇨ 8-BIT COMPARATOR 1(6)

■ **8-BIT** ■ **COMPARATOR 1**	⇔	**8BIT COMP 1 A:** **0.00**	Range: –12700.00 to 12700.00
	⇩	**8BIT COMP 1 B:** **0.00**	Range: –12700.00 to 12700.00
	⇧	**8BIT COMP 1 OUT:** **0.00**	Range: –12700.00 to 12700.00

The two (A and B) 8-bit digitized inputs as well as the resulting sum/difference are available for display. The values are re-scaled from the original integer numbers using the **8BIT COMP 1 SCALE FACTOR** setting.

6.4.8 Summator

ACTUAL VALUES ⇨⇩ METERING ⇨⇩ SUMMATOR ⇨ SUMMATOR 1(6)

■ SUMMATOR 1 ■	⇔	SUMMATOR 1 OUTPUT: 0.000

The values for the six summator outputs are available for display. The values are displayed with the units programmed in the **SUMMATOR 1(6) UNITS** setting.

6.4.9 Direct analogs

ACTUAL VALUES ⇨⇩ METERING ⇨⇩ DIRECT ANALOGS

■ DIRECT ANALOGS ■	⇔	ANALOG INPUT 1: 0.000
		⇩
	⇧	ANALOG INPUT 32: 0.000

The values for the 32 direct analog inputs are available for display. The values are displayed with the units programmed in the **DIRECT ANALOG 1 UNITS** to **DIRECT ANALOG 32 UNITS** settings.

6.4.10 RxGOOSE analogs

ACTUAL VALUES ⇨⇩ METERING ⇨⇩ RxGOOSE Analogs

■ RxGOOSE ■ Analogs	⇔	RxGOOSE Analog 1 0.000
		⇩
	⇧	RxGOOSE Analog 32 0.000
	⇧	RxGOOSE An1 ExpnSt: Off

SOFTWARE OPTION

This menu displays when the product includes an IEC 61850 software option.

The RxGOOSE Analog values display in this menu. The RxGOOSE Analog values are received via IEC 61850 GOOSE messages sent from other devices.

6.4.11 Sensitive directional power

ACTUAL VALUES ⇨⇩ METERING ⇨⇩ SENSITIVE DIRECTIONAL POWER ⇨ DIRECTIONAL POWER 1(2)

■ DIRECTIONAL ■ POWER 1	⇔	DIRECTIONAL POWER 1 3Φ: 0.0 kW

The effective operating quantities of the sensitive directional power elements display here. The display is useful to calibrate the feature by compensating the angular errors of the CTs and VTs with the use of the **RCA** and **CALIBRATION** settings.

6.4.12 Frequency rate of change

ACTUAL VALUES ⇨⇩ METERING ⇨⇩ FREQUENCY RATE OF CHANGE 1(4)

■ FREQUENCY RATE ■ OF CHANGE 1	⇔	FREQUENCY RATE OF CHANGE1: 0.00 Hz/s

The metered frequency rate of change for the frequency rate of change elements is shown here.

6.4.13 Phasor Measurement Unit

ACTUAL VALUES ⇨⇩ METERING ⇨⇩ PHASOR MEASURMENT UNIT ⇨⇩ PMU 1(6)

■ PMU 1 ■	⇔	PMU 1 VA: 0.000 V 0.00°	Range: Va or Vab per VT bank connection
	⇩	PMU 1 VB: 0.000 V 0.00°	Range: Va or Vab per VT bank connection
	⇩	PMU 1 VC: 0.000 V 0.00°	Range: Va or Vab per VT bank connection
	⇩	PMU 1 VX: 0.000 V 0.00°	
	⇩	PMU 1 V1: 0.000 V 0.00°	
	⇩	PMU 1 V2: 0.000 V 0.00°	
	⇩	PMU 1 V0: 0.000 V 0.00°	Range: Substituted with zero if delta-connected VTs
	⇩	PMU 1 IA: 0.000 A 0.00°	
	⇩	PMU 1 IB: 0.000 A 0.00°	
	⇩	PMU 1 IC: 0.000 A 0.00°	
	⇩	PMU 1 IG: 0.000 A 0.00°	
	⇩	PMU 1 I1: 0.000 A 0.00°	
	⇩	PMU 1 I2: 0.000 A 0.00°	
	⇩	PMU 1 I0: 0.000 A 0.00°	
	⇩	PMU 1 FREQUENCY: 0.000 Hz	
	⇩	PMU 1 df/dt: 0.00 Hz/s	
	⇧	PMU 1 CONFIG CHANGE COUNTER: 0	Range: 0 to 65535

These actual values display without the corresponding time stamp as they become available per the recording rate setting. Also, the recording post-filtering setting is applied to these values.

6.4.14 PMU aggregator

ACTUAL VALUES ⇨⇩ METERING ⇨⇩ PHASOR MEASURMENT UNIT ⇨⇩ PMU AGGREGATOR 1(4)

■ PMU AGGREGATOR 1 ■	⇔	PMU AGGREGATOR 1 PDU SIZE: 0

Actual values for the IEC 61850-90-5 PDU size are provided. These values allow you to know the approximate Ethernet frame size for the data streams from each aggregator. This can help to estimate network loading. The PDU size shown in the displays does not include the Ethernet, UDP, or IP layers. PDU sizes approaching approximately 1500 bytes result in fragmented data frames, causing increased network traffic.

6.4.15 Transducer inputs and outputs

ACTUAL VALUES ⇨⇩ METERING ⇨⇩ TRANSDUCER I/O DCMA INPUTS ⇨ DCMA INPUT xx

■ DCMA INPUT xx ■	⇔	DCMA INPUT xx 0.000 mA

Actual values for each DCmA input channel that is enabled are displayed with the top line as the programmed channel ID and the bottom line as the value followed by the programmed units.

ACTUAL VALUES ⇨⇩ METERING ⇨⇩ TRANSDUCER I/O RTD INPUTS ⇨ RTD INPUT xx

■ RTD INPUT xx ■	⇔	RTD INPUT xx -50 °C

Actual values for each RTD input channel that is enabled are displayed with the top line as the programmed channel ID and the bottom line as the value.

6.4.16 Harmonic detection

ACTUAL VALUES ⇨⇩ METERING ⇨⇩ HARMONIC DETECTION ⇨⇩ HARMONIC DETECTOR 1(6)

■ HARMONIC DET 1 ■	⇔	HARMONIC DET 1 IA: 0.0%
	⇩	HARMONIC DET 1 IB: 0.0%
	⇩	HARMONIC DET 1 IC: 0.0%
	⇩	HARMONIC DET 1 IAVG: 0.0%
	⇧	HARMONIC DET 1 IG: 0.0%

6.4.17 Multi-range signal oscillation detector (MSOD)

ACTUAL VALUES ⇨ METERING ⇨⇩ MUTLI-RANGE SIGNAL OSCILL DETECTOR 1(6)

■ MULTI-RANGE SIGNAL ■ OSCILL DETECTOR 1	⇔	Freq_osc: 0.00 Hz
	⇩	Mag_osc: 0.00 pu
	⇩	Phase_osc: 0.0 DEG

6

⇧ DampR_osc:
0.0 %

6.5 Remote resources

6.5.1 Field unit

ACTUAL VALUES ⇨⇩ REMOTE RESOURCES ⇨⇩ FIELD UNIT U1(U8)

■ FIELD UNIT U1
■ ID: U 1

⇔ FIELD UNIT STATUS:
DISABLED — Range: Disabled, Enabled

⇕ BRICK SERIAL NUMBER:

⇕ BRICK ORDER CODE:
CC-55

⇕ BRICK DIGITAL CORE:
0

⇕ LOCAL TRANSCEIVER:
TX POWER: 0.0 dBm

⇕ BRICK TRANSCEIVER
RX POWER: 0.0 dBm

⇕ BRICK TRANSCEIVER
TX POWER: 0.0 dBm

⇧ LOCAL TRANSCEIVER
RX POWER: 0.0 dBm

6

This menu displays when using a Process Bus Module for a HardFiber Brick.

6.6 Process Bus Module

6.6.1 General status

ACTUAL VALUES ⇨⇩ PB MODULE ⇨ GENERAL STATUS

■ GENERAL STATUS
■

⇔ NETWORK CONFIG:
INDEPENDENT — Range: INDEPENDENT, PRP, HSR, Dual HSR

⇕ Port 1a Status:
Disabled — Range: Disabled, Enabled, Active

⇩

⇧ Port 4b Status:
Disabled — Range: Disabled, Enabled, Active

SOFTWARE OPTION

These menus display when the product includes a Process Bus Module with order code 85, 86, or 87. The actual values display on the front panel and software. Additional values display in a web browser; enter the IP address of the relay and access the **Process Card Menu**.

Ports applicable to the Process Bus Module display. The example shows all eight ports.

The information also displays in a web browser under **Process Card Menu > Process Card Port Information**.

6.6.2 RxSV status

ACTUAL VALUES ⇨⇩ PB MODULE ⇨⇩ RxSV Status

■ RxSV Status ■	⇔	All RxSV Online: No	Range: Yes, No
	⇩	■ RxSV 1 ■	See below
	⇩		
	⇧	■ RxSV 8 ■	

ACTUAL VALUES ⇨⇩ PB MODULE ⇨⇩ RxSV Status ⇨ RxSV1(8)

■ RxSV 1 ■	⇔	SV 1 Status: Off	Range: Off, On, Not Configured
	⇩	SV 1 Sync Status: No Sync	Range: Local, Global, No Sync
	⇩	SV 1 SynchSrcID: 0000000000000000	Range: Any 8-octet value
	⇩	SV 1 Sim Flag: Off	Range: Off, On
	⇩	SV 1 Delay: 0 µs	Range: µs
	⇩	SV 1 Missed Frames: No	Range: Yes, No
	⇩	SV 1 Ch 1 Quality: 0	Range: 0000000000000
	⇩		
	⇧	SV 1 Ch16 Quality: 0	

Additional actual values for sampled values display in a web browser. Enter the IP address of the relay and access **Process Card Menu > Process Card Diagnostics**, for which the following fields are explained.

All SV diagnostics are volatile and are cleared when power is cycled.

Sample Value processing delay...Min Delay — The minimum time delay in received sample values. The accuracy threshold of this diagnostics is within 1/8 of a power system cycle.

Sample Value processing delay...Max Delay — The maximum time delay in received sample values. The accuracy threshold of this diagnostics is within 1/8 of a power system cycle.

Sample Value processing delay...Avg Delay — The average time delay for received sample values. A delay up to about 1.5 milliseconds (1500 µsec) is normal. The accuracy threshold of this diagnostics is within 1/8 of a power system cycle.

SV Delay Alarm Counter — The number of times that sampled values from a configured SV stream are delayed for more than the **Settings > Process Bus Module > General > SV Delay Alarm** setting. Counters wrap around when they reach 4294967295.

Sample Estimation Counter — The number of times that the relay used an internal estimation algorithm to substitute a missing sample value. Counters wrap around when they reach 4294967295.

Stream Status — The status of a configured SV stream. If the **Settings > Process Bus Module > SV Stream Config > SV Stream** setting is set to Disabled, this value is shown as Disabled. If the setting is set to IEC 61850-9-2LE or IEC 61869-9 and received sample values are accepted by the relay, this value is shown as Online. If received sample values are rejected, or sample values are lost (frames not received), stream status changes to Offline.

Latest Unacceptable Quality — Time stamp of the latest sample value with unacceptable quality, in any data item in a dataset. This time stamp has 1/8 of a power system cycle accuracy threshold.

Latest Sim Bit Change — The time stamp of latest change in simulation bit status of the received RxSV# messages. This time stamp has 1/8 of a power system cycle accuracy threshold.

SmpSync Latest Update Time — The time stamp of the latest sample value for which the SmpSync attribute was different from the previous samples. This value determines when the time source that sample value stream is synchronized to has changed. This time stamp has 1/8 of a power system cycle accuracy threshold.

SmpSync Changes in Past 24hrs — The number of times the SmpSync attribute in the sample value messages from this stream has changed in the past 24 hours. This counter is updated every hour. Counters wrap around when they reach 4294967295. The accuracy of this metric is 1.5 hours over a 24-hour period.

Sample Estimate Fail-Last 10s — The number of times that three or more out of five consecutive samples has been lost in the last 10 seconds. This counter is updated every second. Counters wrap around when they reach 4294967295.

Sample Value Trouble Counter — The number of times that the SV Stream Trouble On minor self-test error is detected by the Process Bus Module. Counters wrap around when they reach 4294967295.

6.6.3 Clock synchronizing

ACTUAL VALUES ⇨⇩ PB MODULE ⇨⇩ TIME SYNC

■ **TIME SYNC** ■	⇔	**Sync Source:** **None**	Range: CPU Clock, PBM PTP Clock, PBM Internal Clock, None
	⇩	**Grandmaster ID:** **00000000000000000**	Range: any 8 octet value
	⇧	**Accuracy:** **0 ns**	Range: 0 to 999,999,999 ns

Additional actual values for time are available under **Actual Values > Status > Real Time Clock Synchronizing**.

Sync Source — This is the time synchronizing source that the UR Process Bus Module is using at present. It displays CPU Clock when the 1 pulse per second (PPS) signal from the main CPU drives the Process Bus Module clock. It displays None when the Process Bus Module clock free runs. It displays SV Sync Stream when the Process Bus Module clock is synchronized to the configured reference stream. It displays PBM Clock when the Process Bus Module clock is synchronized to a PTP grandmaster clock. The time synchronizing source itself is set using **SETTINGS ⇨ PRODUCT SETUP ⇨⇩ REAL TIME CLOCK** and **SETTINGS ⇨⇩ PROCESS BUS MODULE ⇨ PBM PTP ⇨ PTP FUNCTION**. If the latter is not set, then the **Sync Source** displays None even when the **REAL TIME CLOCK** setting is configured.

Grandmaster ID — This is the grandmaster clock (grandmasterIdentity) of the present PTP network if any. When the UR Process Bus Module is not using any PTP grandmaster, this actual value is set to the ID of that relay and the relay is acting as grandmaster in the network. The ID code is specified by PTP to be globally unique, so one can always know which clock is grandmaster in a system with multiple grandmaster-capable clocks.

Accuracy — This is the estimated time error based on the clockAccuracy information embedded in the received time signal. This actual value indicates the grandmaster clock accuracy. The clockAccuracy enumeration information received from the grandmaster is translated into nanoseconds as specified in the following table. The value 999,999,999 indicates that the magnitude of the estimated error is one second or more, or that the error cannot be estimated. The value 999,999,999 is used if the clockAccuracy received from grandmaster is in the ranges: 00 - 1F and 2F - FF. If the relay is the grandmaster, the actual value indicates the estimated accuracy of the local clock and the same information is embedded in the transmitted PTP messages. See defaultDS.clockQuality.clockAccuracy for more information.

Table 6-3: Clock accuracy

Value (hex)	Specification
00-1F	Reserved
20	The time is accurate to within 25 ns
21	The time is accurate to within 100 ns
22	The time is accurate to within 250 ns
23	The time is accurate to within 1 μs
24	The time is accurate to within 2.5 μs

Value (hex)	Specification
25	The time is accurate to within 10 µs
26	The time is accurate to within 25 µs
27	The time is accurate to within 100 µs
28	The time is accurate to within 250 µs
29	The time is accurate to within 1 ms
2A	The time is accurate to within 2.5 ms
2B	The time is accurate to within 10 ms
2C	The time is accurate to within 25 ms
2D	The time is accurate to within 100 ms
2E	The time is accurate to within 250 ms
2F	The time is accurate to within 1 s
30	The time is accurate to within 10 s
31	The time is accurate to greater than 10 s
32-7F	Reserved
80-FD	For use by alternate PTP profiles
FE	Unknown
FF	Reserved

6.6.4 PRP

ACTUAL VALUES ⇩⇨ PB Module⇩⇨ PBM PRP Status

■ **PBM PRP Status** ■	⇔	**Total Rx Port A:** **0**	Range: 0 t0 4G
	⇕	**Total Rx Port B:** **0**	Range: 0 t0 4G
	⇕	**Total Errors Port A:** **0**	Range: 0 t0 4G
	⇕	**Total Errors Port B:** **0**	Range: 0 t0 4G
	⇕	**Mismatches Port A:** **0**	Range: 0 t0 4G
	⇕	**Mismatches Port B:** **0**	Range: 0 t0 4G
	⇕	**FER Port A:** **0**	Range: 0 t0 4G
	⇕	**FER Port B:** **0**	Range: 0 t0 4G
	⇕	**Link Active Port A:** **No**	Range: Yes, No
	⇧	**Link Active Port B:** **No**	Range: Yes, No

Total Rx Port A Counter for total messages received (either from DANPs or from SANs) on Port A

6

Total Rx Port B	Counter for total messages received (either from DANPs or from SANs) on Port B
Total Errors Port A	Counter for total messages received with an error (bad port code, frame length too short) on Port A
Total Errors Port B	Counter for total messages received with an error (bad port code, frame length too short) on Port B
Mismatches Port A	Counter for total messages received with an error on Port A (PRP frame, but port received through and LAN id in the frame don't match)
Mismatches Port B	Counter for total messages received with an error on Port B (PRP frame, but port received through and LAN id in the frame don't match),
FER Port A	Frame Error Rate is a counter which counts Erroneous messages on channel A for every 1000 messages forwarded to Application.
FER Port B	Frame Error Rate is a counter which counts Erroneous messages on channel B for every 1000 messages forwarded to Application.
Link Active Port A	If true, link is up and channel A is receiving telegrams within a specified time interval (5 s).
Link Active Port B	If true, link is up and channel B is receiving telegrams within a specified time interval (5 s).

.

Actual values for the Parallel Redundancy Protocol (PRP) display in a web browser. Enter the IP address of the relay and access the **Process Card Menu > Process Card PRP Statistics**, which displays only when PRP is used.

6

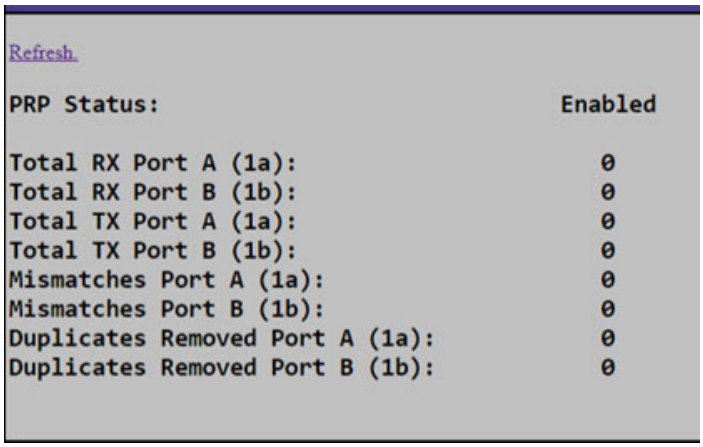

PRP Status — PRP is Enabled if **Settings > Process Bus Module > General > Network Config** is set to PRP, else it is Disabled.

Total Rx Port A — Counter indicating the number of frames received on port A, for example port 1a.

Total Rx Port B — Counter indicating the number of frames received on port B, for example port 1b.

Total Tx Port A — Counter indicating the number of frames sent on port A, for example port 1a.

Total Tx Port B — Counter indicating the number of frames sent on port B, for example port 1b.

Mismatches Port A — Counter indicating the number of erroneous frames received on port A, for example port 1a.

Mismatches Port B — Counter indicating the number of erroneous frames received on port B, for example port 1b.

Duplicates Removed Port A — Number of PRP duplicate frames received from port A and discarded, for example port 1a.

Duplicates Removed Port B — Number of PRP duplicate frames received from port B and discarded, for example port 1b.

6.6.5 HSR

Actual values for High-Availability Seamless Redundancy (HSR) display in a web browser. Enter the IP address of the relay and access the **Process Card Menu > Process Card HSR Statistics**, which displays only when HSR is used.

HSR1 Status — Status of the first ring, either enabled or disabled. Enabled when redundancy is set to HSR or Dual-HSR.

HSR2 Status — Status of the second ring, either enabled or disabled. Enabled when redundancy is set to HSR or Dual-HSR.

Total Rx Port A — Counter indicating the number of frames received on port A, for example port 1a.

Total Rx Port B — Counter indicating the number of frames received on port B for example port 1b.

Total Tx Port A — Counter indicating the number of frames sent on port A, for example port 1a.

Total Tx Port B — Counter indicating the number of frames sent on port B, for example port 1b.

Duplicates Removed Port A — Number of HSR duplicate frames received from port A and discarded, for example port 1a.

Duplicates Removed Port B — Number of HSR duplicate frames received from port B and discarded, for example port 1b.

6.7 Records

6.7.1 User programmable fault reports

ACTUAL VALUES ⇨⇩ RECORDS ⇨⇩ USER PROGRAMMABLE FAULT REPORTS

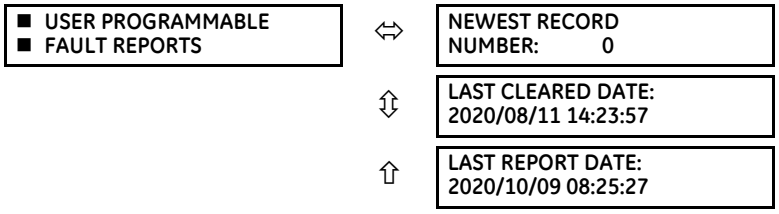

This menu displays the user-programmable fault report actual values. See the User Programmable Fault Report section in chapter 5 for information on this feature.

6.7.2 Event records

6.7.2.1 Enhanced and basic front panels

ACTUAL VALUES ⇨⇩ RECORDS ⇨ EVENT RECORDS

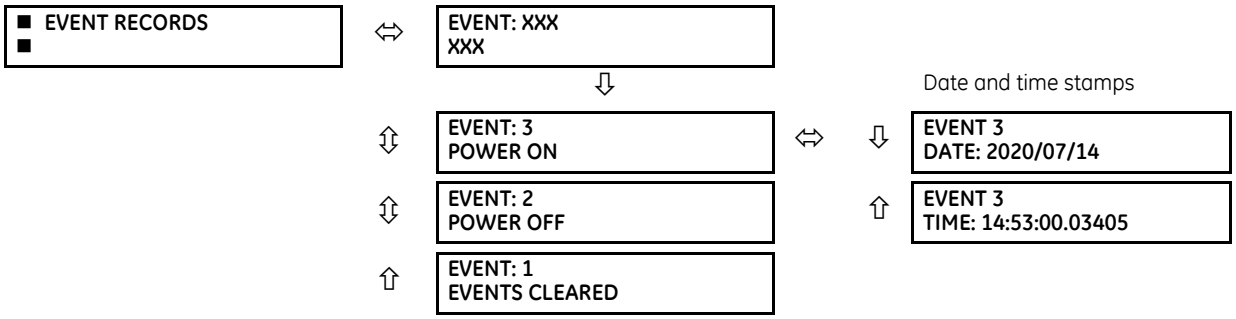

The event records menu shows the contextual data associated with up to the last 1024 events, listed in chronological order from most recent to oldest. When all 1024 event records have been filled, the oldest record is removed as a new record is added. Each event record shows the event identifier/sequence number, cause, and date/time stamp associated with the event trigger. See the **COMMANDS ⇨⇩ CLEAR RECORDS** menu for clearing event records.

Only major output operands generate events, not every operand. Elements that assert output per phase, for example, log operating phase output only without asserting the common three-phase operand event.

See also the system log (syslog) information in the previous chapter.

The event records are viewable in the software and in a web browser. The figure shows the event records in the software.

Figure 6-6: Event records viewed in EnerVista software

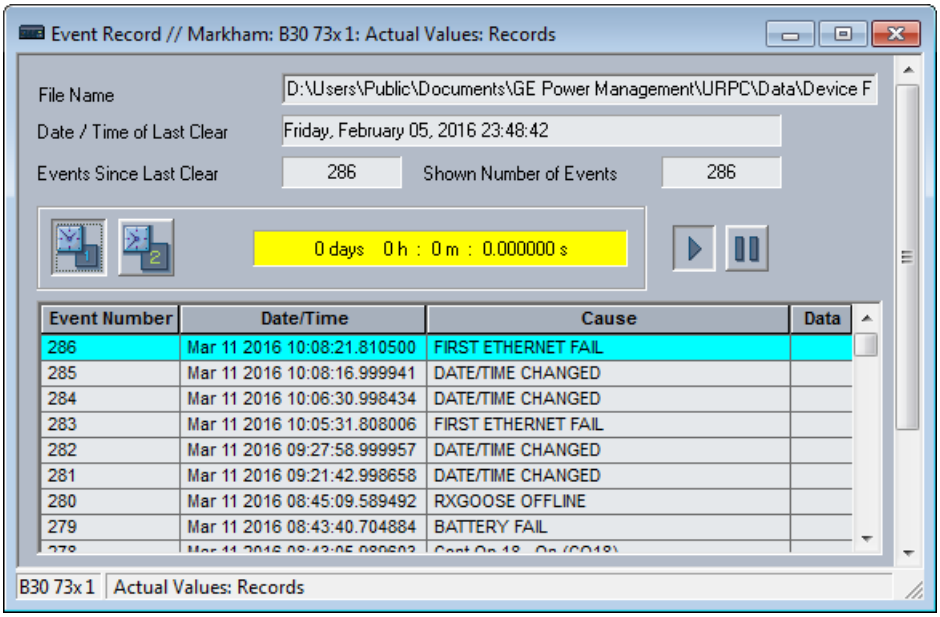

6

To view events in a web browser:

1. Enter the IP address of the device.

To download an oscillography waveform:

1. Click the **Oscillography** icon in the **Data** column (not shown in the figure).

6.7.2.2 Graphical front panel

To display the event records page, press the **Home** pushbutton then the **Event Record** Tab pushbutton.

The newest event is always at the top.

Up and Down pushbuttons move the event selector up and down. When the selector is at the bottom of the display, the Down pushbutton also scrolls the page, and similarly when the active selector is at the top of the display the Up pushbutton scroll the page.

A selected event is highlighted in yellow and becomes active by pressing the Up or Down pushbutton.

There are two event markers, one green, the other cyan. To mark some an event, use the Up and Down pushbuttons to select it (highlight in yellow), then press the green or cyan Mark Event Tab pushbutton. The mark color hides the selector until the selector is moved. A field at the top of the page shows the interval between the two marks.

Figure 6-7: Event record

\\Event Record 29-Jun-17 11:56:33 AM

Most recent event number	38	Time between marks	0d 0h : 0m : 35.012364s

Event ID	Date/Time	Cause
38	29-Jun-17 10:17:56.117582	WRONG TRANSCEIVER
37	29-Jun-17 10:17:56.117582	POWER ON
36	29-Jun-17 10:17:21.105218	POWER OFF
35	29-Jun-17 10:17:21.105218	REBOOT COMMAND
34	29-Jun-17 10:01:41.074062	FLASH PROGRAMMING
33	29-Jun-17 09:49:33.711569	RESET ANCTR OP(MNUL)
32	29-Jun-17 09:49:12.946980	RESET ANCTR OP(MNUL)
31	29-Jun-17 09:47:51.344902	RESET ANCTR OP(MNUL)
30	29-Jun-17 09:41:34.117044	WRONG TRANSCEIVER
29	29-Jun-17 09:41:34.117044	POWER ON

Mark Event | Mark Event | Page Up | Page Down

6.7.3 Oscillography

6.7.3.1 Enhanced and basic front panels

ACTUAL VALUES ⇨⇩ RECORDS ⇨⇩ OSCILLOGRAPHY

■ OSCILLOGRAPHY ■	⇔	FORCE TRIGGER? No	Range: No, Yes
	⇕	NUMBER OF TRIGGERS: 0	
	⇕	AVAILABLE RECORDS: 0	
	⇕	CYCLES PER RECORD: 0	
	⇧	LAST CLEARED DATE: 2019/07/14 15:40:16	

This menu allows the user to view the number of triggers involved and number of oscillography traces available. The cycles per record value is calculated to account for the fixed amount of data storage for oscillography. See the Oscillography section of chapter 5 for details.

A trigger can be forced here at any time by setting "Yes" to the FORCE TRIGGER? command. See the **COMMANDS ⇨⇩ CLEAR RECORDS** menu for information on clearing the oscillography records.

To view a waveform:

2. Access **Actual Values > Records > Oscillography** in the EnerVista software.
3. In the window that opens, select the record number. The highest number is the most recent record (Newest Record Number).
4. Click the **Read** button to get the waveform. When available, waveforms are displayed graphically, and otherwise error messages display.
5. In the waveform window that opens, you can save the file, for example with the CFG extension.

6.7.4 Data logger

ACTUAL VALUES ⇨⇩ RECORDS ⇨⇩ DATA LOGGER

■ DATA LOGGER ■	⇔	OLDEST SAMPLE TIME: 2020/01/14 13:45:51

⇧ NEWEST SAMPLE TIME:
2020/01/14 15:21:19

The **OLDEST SAMPLE TIME** represents the time at which the oldest available samples were taken. It is static until the log gets full, at which time it starts counting at the defined sampling rate.

The **NEWEST SAMPLE TIME** represents the time the most recent samples were taken. It counts up at the defined sampling rate. If the data logger channels are defined, then both values are static.

See the **COMMANDS ⇨⇩ CLEAR RECORDS** menu for clearing data logger records.

6.7.5 Phasor Measurement Unit records

ACTUAL VALUES ⇨ RECORDS ⇨⇩ PMU RECORDS

■ PMU
■ RECORDS

⇔ NUMBER OF TRIGGERS:
0 — Range: 0 to 65535 in steps of 1

⇩ ■ PMU 1
■ RECORDING — See below

⇩

⇧ ■ PMU 6
■ RECORDING

The number of triggers applicable to all the phasor measurement unit recorders is indicated by the **NUMBER OF TRIGGERS** value. The status for each of the six phasor measurement unit recorders is indicated as follows.

ACTUAL VALUES ⇨ RECORDS ⇨⇩ PMU RECORDS ⇨⇩ PMU 1(6) RECORDING

■ PMU 1
■ RECORDING

⇔ PMU 1 FORCE TRIGGER:
Yes — Range: No, Yes

⇩ PMU 1 AVAILABLE
RECORDS: 0 — Range: 0 to 65535 in steps of 1

⇩ PMU 1 SECONDS PER
RECORD: 0.0 — Range: 0 to 6553.5 in steps of 0.1

⇧ PMU 1 LAST CLEARED:
2020/07/14 15:40:16 — Range: date and time in format shown

6.8 Product information

6.8.1 Model information

ACTUAL VALUES ⇨⇩ PRODUCT INFO ⇨ MODEL INFORMATION

■ MODEL INFORMATION
■

⇔ ORDER CODE LINE 1:
N60-A00-AAA-A0A-A0A- — Range: standard GE order code format

⇩ ORDER CODE LINE 2:
A0A-A0A-A0A — Range: up to 20 alphanumeric characters

⇩ ORDER CODE LINE 3: — Range: up to 20 alphanumeric characters

⇩ ORDER CODE LINE 4: — Range: up to 20 alphanumeric characters

⇩ SERIAL NUMBER: — Range: standard GE serial number format

⇕	ETHERNET MAC ADDRESS 000000000000	Range: standard Ethernet MAC address format
⇕	MANUFACTURING DATE:	Range: YYYY/MM/DD HH:MM:SS
⇕	OPERATING TIME: 0:00:00	Range: HH:MM:SS
⇕	PMU FEATURE ACTIVE: No	Range: Yes, No
⇕	CT/ VT ADVANCED DIAG ACTIVE: No	Range: Yes, No
⇕	LAST SETTING CHANGE: 2019/01/01 23:11:19	Range: YYYY/MM/DD HH:MM:SS
⇧	PBM MAC ADDRESS: 664422113344	Range: YYYY/MM/DD HH:MM:SS

The order code, serial number, Ethernet MAC address, date and time of manufacture, and operating time are shown here. The rear panel on the device contains similar information. The information is read-only in the software and modifiable on the front panel. For example, the order code can be corrected using the front panel.

ETHERNET MAC ADDRESS — UR devices with firmware 7.0x and above have three Ethernet ports that can be used on three networks. The MAC address displays for port 1. The MAC address for port 2 is one higher. The MAC address for port 3 is one higher than port 2. In redundant mode, the MAC addresses for ports 2 and 3 are the same as port 2.

PBM MAC ADDRESS — The MAC address for the Process Bus Module.

6.8.2 Firmware revisions

6.8.2.1 Enhanced and basic front panels

ACTUAL VALUES ⇨⇩ PRODUCT INFO ⇨ FIRMWARE REVISIONS

■ FIRMWARE REVISIONS ■	⇔	N60 REVISION: 7.9x	Range: 0.00 to 655.35 Revision number of the application firmware.
	⇕	MODIFICATION FILE NUMBER: 0	Range: 0 to 65535 (ID of the MOD FILE) Value is 0 for each standard firmware release.
	⇕	BOOT PROGRAM REVISION: 7.06	Range: 0.00 to 655.35 Revision number of the boot program firmware.
	⇕	FRONT PANEL PROGRAM REVISION: 2.01	Range: 0.00 to 655.35 Revision number of front panel program firmware.
	⇕	COMPILE DATE: 2021/04/09 04:55:16	Range: YYYY/MM/DD HH:MM:SS Date and time when product firmware was built.
	⇕	BOOT DATE: 2021/02/23 16:41:32	Range: YYYY/MM/DD HH:MM:SS Date and time when the boot program was built.
	⇕	PROCESS BUS BOOT REVISION: 0.00	Range: 0.00 to 655.35
	⇕	PB BOOT DATE: 2018/09/15 04:55:16	Range: YYYY/MM/DD HH:MM:SS
	⇕	PROCESS BUS REVISION: 7.9x	Range: 0.00 to 655.35
	⇕	PROCESS BUS DATE: 2018/09/15 04:55:16	Range: YYYY/MM/DD HH:MM:SS

⇕	**PB CVSOC FPGA REVISION: 0.00**	Range: 0.00 to 655.35
⇕	**PB CVFPGA FPGA REVISION: 0.00**	Range: 0.00 to 655.35
⇕	**PB CVFPGA SIGN: 33272**	Range:
⇕	**FPGA PROGRAM REVISION: 02.02**	Range: 0.00 to 655.35 Revision number for FPGA.
⇧	**FPGA DATE: 2016/09/15 16:41:32**	Range: YYYY/MM/DD HH:MM:SS Date and time when the FPGA was built.

The shown data is illustrative only. A modification file number of 0 indicates that, currently, no modifications have been installed. PB and process bus refer to the Process Bus Module.

6.8.2.2 Graphical front panel

With a graphical front panel (GFP), the following additional items display in the software.

⇕	**GFP PROGRAM REVISION: 7.80**	Range: 0.00 to 655.35
⇕	**GFP COMPILE DATE: 2018/09/15 04:55:16**	Range: YYYY/MM/DD HH:MM:SS
⇕	**GFP BOOT PROGRAM REVISION: 655.35**	Range: 0.00 to 655.35
⇧	**GFP BOOT COMP. DATE: 2016/09/15 04:55:16**	Range: YYYY/MM/DD HH:MM:SS

N60 Network Stability and Synchrophasor Measurement System

Chapter 7: Commands and targets

This chapter outlines the Commands and Targets menus and self-tests/error messages. Commands related to the IEC 61850 protocol are outlined in the IEC 61850 section of the Settings chapter. Log/error messages for IEC 61850 are outlined in the UR Family Communications Guide.

7.1 Commands menu

```
COMMANDS
   ⇩
⇩  ■■ COMMANDS
   ■■ VIRTUAL INPUTS
⇕  ■■ COMMANDS
   ■■ CLEAR RECORDS
⇕  ■■ COMMANDS
   ■■ SET DATE AND TIME
⇕  ■■ COMMANDS
   ■■ RELAY MAINTENANCE
⇕  ■■ COMMANDS
   ■■ PMU ONE-SHOT
⇧  ■■ COMMANDS
   ■■ SECURITY
```

The commands menu contains relay directives intended for operations personnel. All commands can be protected from unauthorized access via the command password; see the Security section of chapter 5 for details. The following flash message appears after successfully command entry.

```
COMMAND
EXECUTED
```

7.1.1 Virtual inputs

COMMANDS ⇨ VIRTUAL INPUTS

■■ COMMANDS ■■ VIRTUAL INPUTS	⇔	Virt Ip 1 Off	Range: Off, On
	⇕	Virt Ip 2 Off	Range: Off, On
	⇕	Virt Ip 128 Off	Range: Off, On

The states of up to 128 virtual inputs are changed here. The first line of the display indicates the ID of the virtual input. The second line indicates the current or selected status of the virtual input. This status is a state off (logic 0) or on (logic 1).

7.1.2 Clear records

COMMANDS ⇨ CLEAR RECORDS

■■ COMMANDS ■■ CLEAR RECORDS	⇔	CLEAR USER FAULT REPORTS? No	Range: No, Yes
	⇕	CLEAR EVENT RECORDS? No	Range: No, Yes
	⇕	CLEAR OSCILLOGRAPHY? No	Range: No, Yes
	⇕	CLEAR DATA LOGGER? No	Range: No, Yes
	⇕	CLEAR DEMAND RECORDS? No	Range: No, Yes
	⇕	CLEAR ENERGY? No	Range: No, Yes
	⇕	CLEAR UNAUTHORIZED ACCESS? No	Range: No, Yes
	⇕	CLEAR DIRECT I/O COUNTERS? No	Range: No, Yes. Valid only for units with Direct Input/Output module.
	⇕	CLEAR PMU 1 RECORDS? No	Range: No, Yes
	⇕	CLEAR PMU 2 RECORDS? No	Range: No, Yes
	⇕	CLEAR PMU 3 RECORDS? No	Range: No, Yes
	⇕	CLEAR PMU 4 RECORDS? No	Range: No, Yes
	⇕	CLEAR PMU 5 RECORDS? No	Range: No, Yes
	⇕	CLEAR PMU 6 RECORDS? No	Range: No, Yes
	⇕	CLEAR PMU 1 CONFIG CHANGE COUNTER? No	Range: No, Yes
	⇕	CLEAR PMU 2 CONFIG CHANGE COUNTER? No	Range: No, Yes

⇳	CLEAR PMU 3 CONFIG CHANGE COUNTER? No	Range: No, Yes
⇳	CLEAR PMU 4 CONFIG CHANGE COUNTER? No	Range: No, Yes
⇳	CLEAR PMU 5 CONFIG CHANGE COUNTER? No	Range: No, Yes
⇳	CLEAR PMU 6 CONFIG CHANGE COUNTER? No	Range: No, Yes
⇳	CLEAR TELEPROTECT COUNTERS? No	Range: No, Yes
⇳	■ CLEAR IEC61850 ■ XWSI OPCNT	See below
⇳	■ CLEAR IEC61850 ■ XCBR OPCNT	See below
⇳	CLEAR SV DIAGNOSTICS? No	Range: No, Yes
⇧	CLEAR ALL RELAY RECORDS? No	Range: No, Yes

This menu contains commands for clearing historical data such as the event records. Data is cleared by changing a command setting to "Yes" and pressing the **ENTER** key. After clearing data, the command setting automatically reverts to "No."

CLEAR SV DIAGNOSTICS — Clears the sampled value diagnostics information for a non-HardFiber Process Bus Module. All other Process Bus Module diagnostics information is reset up relay power cycling, such as HSR and PTP.

COMMANDS ⇨ CLEAR RECORDS ⇨⇩ CLEAR IEC61850 XWSI OPCNT

■ CLEAR IEC61850 ■ XWSI OPCNT	⇔	CLEAR XSWI 1 OpCnt? No	Range: No, Yes
		⇩	
	⇧	CLEAR XSWI 24 OpCnt? No	Range: No, Yes

COMMANDS ⇨ CLEAR RECORDS ⇨⇩ CLEAR IEC61850 XCBR OPCNT

■ CLEAR IEC61850 ■ XCBR OPCNT	⇔	CLEAR XCBR 1 OpCnt? No	Range: No, Yes
		⇩	
	⇧	CLEAR XCBR 8 OpCnt? No	Range: No, Yes

The Clear XSWI commands clear the disconnect operation counters for each phase and the three-phase counter. Similarly, the Clear XCBR commands clear the circuit breaker operation counters for each phase and the three-phase counter.

7.1.3 Set date and time

COMMANDS ⇨⇩ SET DATE AND TIME

■■ COMMANDS ■■ SET DATE AND TIME	⇔	SET DATE AND TIME: 2020/01/14 13:47:03	Range: YYYY/MM/DD HH:MM:SS

The date and time can be entered on the front panel keypad. The time setting is based on the 24-hour clock. The complete date, as a minimum, must be entered to allow execution of this command. The new time and date take effect when the **ENTER** key is pressed.

The clock also can be synchronized to the local computer time among several UR devices. Use the **Synchronize Devices** entry in the Online Window area of the EnerVista software. (Click the button at the top of the window that opens.)

When the relay is synchronizing to an external time source such as PTP, IRIG-B, or SNTP, the manually entered time or the manually synchronized time is over-written.

The timescale of the entered time is local time, including daylight savings time where and when applicable.

7.1.4 Relay maintenance

COMMANDS ⇨⇩ RELAY MAINTENANCE

■■ COMMANDS ■■ RELAY MAINTENANCE	⇔	PERFORM LAMP TEST? No	Range: No, Yes
	⇩	PERFORM LCD TEST? Off	Range: Off, Red, Green, Blue, White & Text Pattern, Black & Text Pattern, TV Test Pattern
	⇩	PERFORM PUSHBUTTON TEST? No	Range: No, Yes
	⇩	UPDATE ORDER CODE? No	Range: No, Yes
	⇩	REBOOT RELAY? No	Range: No, Yes
	⇩	SERVICE COMMAND 0	Range: 0, 101, 20511
	⇧	SAVE VOLATILE DATA? No	Range: No, Yes

This menu contains commands for relay maintenance purposes. Commands for the lamp test and order code are activated by changing a command setting to "Yes" and pressing the **ENTER** key. The command setting then automatically reverts to "No." The service command is activated by entering a numerical code and pressing the **ENTER** key.

Not all commands display in the software; use the front panel when required.

PERFORM LAMP TEST — Turns on all front panel LEDs and display pixels for a short duration.

PERFORM LCD TEST — This command detects either stuck-ON or stuck-OFF pixels (dead pixels) in the display screen on the graphical front panel. RED/GREEN/BLUE is to display the solid background color in the whole screen. WHITE & TEXT PATTERN shows the white background and black texts. BLACK & TEXT PATTERN shows the black background and white texts. TV TEST PATTERN displays a standard television test pattern (SMPTE color bars). The test screen can be canceled by pressing any pushbutton or after 30 seconds of inactivity.

PERFORM PUSHBUTTON TEST — This command tests the pushbuttons on the graphical front panel. During testing, press the corresponding pushbutton according to the prompt text. A failure message is given if the expected action is not detected in one minute. Holding the **ESCAPE** button for five seconds to interrupt the test sequence. The designated function of a specific pushbutton is bypassed in the test.

UPDATE ORDER CODE — Use this command to read and update the order code, for example when hardware modules have been changed inside the relay. It causes the relay to scan the backplane for the modules and update the order code to match. All settings are defaulted with an update. When an update occurs, the following message displays and the relay restarts.

There is no impact if there have been no changes to the hardware modules. When an update does not occur, the ORDER CODE NOT UPDATED message displays.

REBOOT RELAY — Restarts the relay so that changes to configuration settings can take effect. In most cases, if changes are made to the configuration settings these changes do not take effect unless the relay is rebooted.

With the CyberSentry option, the Administrator and Operator roles can initiate the Reboot Relay command.

SERVICE COMMAND — Performs specific N60 service actions. Presently, there are two service actions available. Code "20511" returns all settings to their factory default value and restarts the relay (then you re-enter IP address, restart, set unit to "Programmed"). Code "101" is used to clear factory diagnostic information stored in the non-volatile memory. If a code other than these two is entered, the command is ignored and no action is taken. Various self-checking diagnostics are performed in the background while the N60 is running, and diagnostic information is stored on the non-volatile memory from time to time based on the self-checking result. Although the diagnostic information is cleared before the N60 is shipped from the factory, the user may want to clear the diagnostic information for themselves under certain circumstances. For example, you clear diagnostic information after replacement of hardware. Once the diagnostic information is cleared, all self-checking variables are reset to their initial state and diagnostics restart from scratch.

SAVE VOLATILE DATA — Saves this data to compact flash memory prior to shutdown. This allows the saved data to be as recent as possible instead of relying on the periodic timer to save the data.

7.1.5 Phasor Measurement Unit one-shot

COMMANDS ⇨⇩ PMU ONE-SHOT

■■ COMMANDS ■■ PMU ONE-SHOT	⇔	PMU ONE-SHOT FUNCTION: Disabled	Range: Enabled, Disabled
	⇩	PMU ONE-SHOT FRACTIONAL SEC: 0	Range: 0 to 99 in steps of 1
	⇧	PMU ONE-SHOT TIME: 2020/06/14 7:58:35	Range: YYYY/MM/DD HH:MM:SS

This feature allows pre-scheduling of a PMU measurement at a specific point in time. It can be used to test for accuracy of the PMU and for manual collection of synchronized measurements through the system, as explained here.

When enabled, the function continuously compares the present time with the pre-set **PMU ONE-SHOT TIME**. When the two times match, the function compares the present sequence number of the measured synchrophasors with the pre-set **PMU ONE-SHOT FRACTIONAL SEC**. When the two numbers match, the function freezes the synchrophasor actual values and the corresponding protocol data items for 30 seconds. This allows manual read-out of the synchrophasor values for the pre-set time and pre-set sequence number (via the faceplate display, supported communication protocols such as Modbus or DNP, and the EnerVista UR Setup software).

When freezing the actual values, the function also asserts a PMU ONE-SHOT OP FlexLogic operand. This operand can be configured to drive an output contact and trigger an external measuring device such as a digital scope with the intent to verify the accuracy of the PMU under test.

With reference to the following figure, the PMU one-shot function (when enabled) controls three FlexLogic operands:

- The PMU ONE-SHOT EXPIRED operand indicates that the one-shot operation has been executed, and the present time is at least 30 seconds past the scheduled one-shot time
- The PMU ONE-SHOT PENDING operand indicates that the one-shot operation is pending; that is, the present time is before the scheduled one-shot time
- The PMU ONE-SHOT OP operand indicates the one-shot operation and remains asserted for 30 seconds afterwards

When the function is disabled, all three operands are de-asserted.

The one-shot function applies to all logical PMUs of a given N60 relay.

Figure 7-1: PMU one-shot FlexLogic operands

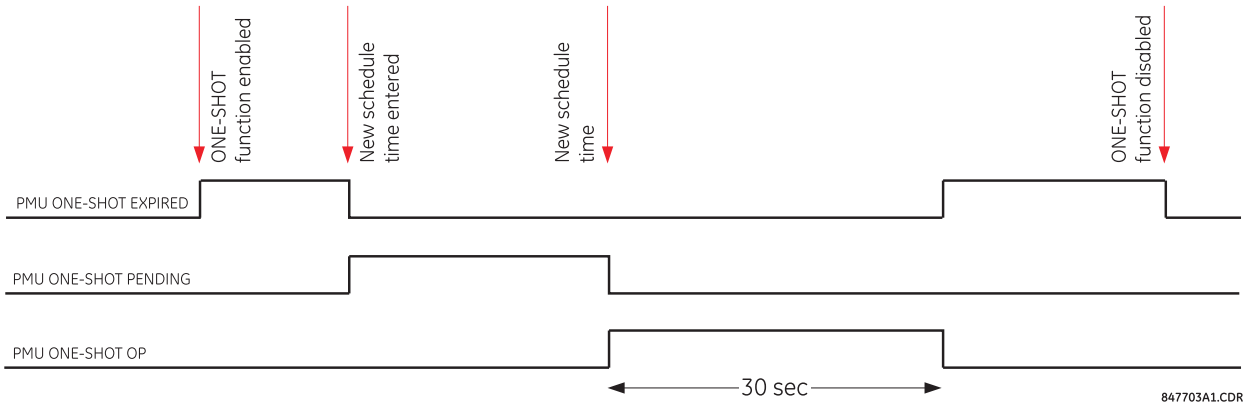

7.1.5.1 Testing accuracy of the PMU

The one-shot feature is used to test accuracy of the synchrophasor measurement. GPS-synchronized tests sets perform a similar function to PMUs; instead of measuring the phasor from physical signals with respect to the externally provided time reference, they produce the physical signals with respect to the externally provided time reference, given the desired phasor values. Therefore the GPS-synchronized test sets cannot be automatically assumed more accurate than the PMUs under test. This calls for a method to verify both the measuring device (PMU) and the source of signal (test set).

With reference to the following figure, the one-shot feature can be configured to trigger a high-accuracy scope to capture both the time reference signal (rising edge of the 1 pps signal of the IRIG-B time reference) and the measured waveform. The high-accuracy high-sampling rate record of the two signals captured by the scope can be processed using digital tools to verify the magnitude and phase angle with respect to the time reference signal. As both the time reference and the measured signals are raw inputs to the PMU under test, their independently captured record, processed using third-party software, is a good reference point for accuracy calculations. Such a record proves useful when discussing the test results, and can be retained as a part of the testing documentation.

Figure 7-2: Using the PMU one-shot feature to test synchrophasor measurement accuracy

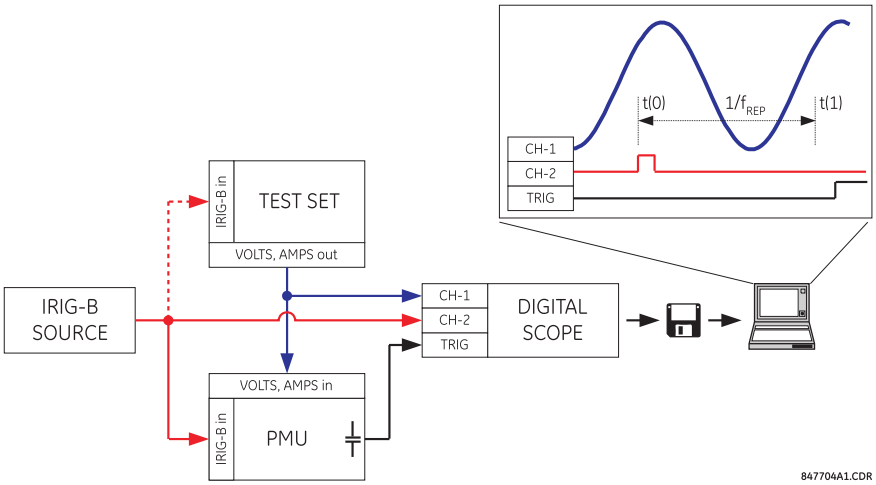

7.1.5.2 Collecting synchronized measurements ad hoc

The one-shot feature can be used for ad hoc collection of synchronized measurements in the network. Two or more PMUs can be pre-scheduled to freeze their measurements at the same time. When frozen, the measurements can be collected using the EnerVista software or a protocol client.

7.1.6 Security

COMMANDS ⇨⇩ SECURITY

■■ SECURITY ■■	⇔	ADMINISTRATOR LOGOFF: No	Range: Yes, No
	⇩	ENGINEER LOGOFF: No	Range: Yes, No
	⇩	OPERATOR LOGOFF: No	Range: Yes, No
	⇧	CLEAR SECURITY DATA: No	Range: Yes, No

With the CyberSentry option, this setting is available to enable or disable the following commands.

ADMINISTRATOR LOGOFF — Selecting 'Yes' allows the Supervisor to forcefully logoff an administrator session.

ENGINEER LOGOFF — Selecting 'Yes' allows the Supervisor to forcefully logoff an engineer session.

OPERATOR LOGOFF — Selecting 'Yes' allows the Supervisor to forcefully logoff an operator session.

CLEAR SECURITY DATA — Selecting 'Yes' allows the Supervisor to forcefully clear all the security logs and clears all the operands associated with the self-tests.

7.2 Targets menu

	TARGETS	
	⇩	
⇩	PHASE TOC4 OP: A B -	Displayed only if targets for this element are active. Example shown.
⇩	DIGITAL ELEMENT 48: LATCHED	Displayed only if targets for this element are active. Example shown.
	⇩	
⇧		

A target enables the EnerVista UR Setup software to monitor automatically and display the status of any active target messages of all the devices inserted into that site.

Each N60 element with a TARGET setting has a target message that when activated by its element is displayed in sequence with any other currently active target messages in the **TARGETS** menu. In the example shown, the Phase TOC4 and Digital Element 48 target settings are active and so have their targets displayed. The down arrow below the two elements indicates that there can be other active elements beyond these two.

For more information, see the description of target messages in the next section, and the Introduction to Elements section in the Settings chapter for instructions on TARGET setting.

When no targets are active, the display reads **NO ACTIVE TARGETS**.

7.2.1 Target messages

When there are no active targets, the first target to become active causes the display to immediately default to that message. If there are active targets and the user is navigating through other messages, and when the default message timer times out (i.e. the keypad has not been used for a determined period of time), the display again defaults back to the target message.

The range of variables for the target messages is described below. Phase information is included if applicable. If a target message status changes, the status with the highest priority displays.

Table 7-1: Target message priority status

Priority	Active status	Description
1	OP	element operated and still picked up
2	PKP	element picked up and timed out
3	LATCHED	element had operated but has dropped out

If a self test error is detected, a message appears indicating the cause of the error. For example UNIT NOT PROGRAMMED indicates that the minimal relay settings have not been programmed.

7.2.2 Relay self-tests

7.2.2.1 Description

The relay performs a number of self-test diagnostic checks to ensure device integrity. The two types of self-tests (major and minor) are listed in the following tables. When either type of error occurs, the Trouble LED Indicator turns on and a target message displays. All errors record an event in the event recorder. Latched errors can be cleared by pressing the **RESET** key, providing the condition is no longer present.

Major self-test errors also result in the following:

- The critical fail relay on the power supply module de-energizes
- All other output relays de-energize and are prevented from further operation
- The front panel In Service LED indicator turns off
- A RELAY OUT OF SERVICE event is recorded

To view error messages in EnerVista software:

1. Access **Actual Values > Records > Event Records**.

Messages display on the front panel with one or two lines of text. An example is as follows. In the tables that follow, messages are grouped using the first line of text. For example, MAINTENANCE ALERT, then a row for 4L Discrepancy, then a row for Bad IRIG-B Signal.

7

MAINTENANCE ALERT:
4L Discrepancy

MAINTENANCE ALERT:
Bad IRIG-B Signal

7.2.2.2 Major self-test error messages

The major self-test errors are outlined in this section.

Table 7-2: Major self-test errors

Error	Latched?	Description	Test frequency	Action
DIAGNOSTIC FAILURE ___: Self Test Error	No	Internal recovery failure detected	Upon recovery	Extract a Service Report through UR Setup software. Contact technical support and supply details of the failure code on the display.

Error	Latched?	Description	Test frequency	Action
EQUIPMENT MISMATCH: *2nd line detail*	No	The number or type of installed hardware modules does not match the order code stored in the N60. An example is when a basic front panel is installed and the order code on the N60 expects a graphical front panel. As another example, "Card F8L Missing" means that hardware module 8L is missing from slot F inside the UR device.	On power up. Afterwards, the backplane is checked for missing cards every five seconds	Check all modules against the order code, ensure they are inserted properly, and cycle control power. If a module has intentionally been added or removed, refresh the order code under **Device Setup**. If the problem persists, contact the factory.
FLEXLOGIC ERROR: *2nd line detail*	No	A FlexLogic equation is incorrect	Event driven, performed whenever FlexLogic equations are modified	Finish all equation editing and use self tests to debug any errors.
RAM FILESYSTEM FAIL: Self-Test Error	Yes	The relay failed to create the RAM file system	On relay startup	Contact factory service
SYSTEM FAILURE ___: *2nd line detail*	Yes	Relay system failure detected	Continuous	Extract a Service Report through UR Setup software. Contact technical support and supply details of the failure code on the display.
SYSTEM FAILURE: Card F8L	Yes	This is an indication that the DSP module has failed. The slot and DSP type are indicated in the message.		The recommendation is to replace this DSP. Extract a Service Report through UR Setup software and provide it to GE customer service.
TO INSTALL SETTINGS: CHECK LOG AND REBOOT	Yes	Certain settings require a reboot to be applied, for example DNP settings, IEC 104 settings. After a CID file was send to the relay, a manual reboot of the relay is required to apply those settings that require a reboot	A new CID is sent and it includes changes in settings that require a reboot to be applied	Restart relay
UNIT NOT PROGRAMMED: Check Settings	No	The **PRODUCT SETUP ⇨⇩ INSTALLATION ⇨ RELAY SETTINGS** setting indicates the N60 is not programmed	On power up and whenever the **PRODUCT SETUP ⇨⇩ INSTALLATION ⇨ RELAY SETTINGS** setting is altered	Program all settings and then set **PRODUCT SETUP ⇨⇩ INSTALLATION ⇨ RELAY SETTINGS** to "Programmed"

7.2.2.3 Minor self-test error messages

Most of the minor self-test errors can be disabled. See the settings in the User-programmable Self-tests section in chapter 5.

Table 7-3: Minor self-test errors

Error	Latched?	Description	Test frequency	Action
AGGREGATOR ERROR:	No	The second line of this self-test error indicates the problem with the PMU Aggregator	Each time a PMU's related settings is changed	Correct the problem indicated in the second line or contact the factory
DIAGNOSTIC ALARM COP: Self-test Error	Yes	This is a preliminary warning that transient errors were detected in the coprocessor. The relay remains operational but some elements can operate slightly delayed.	Module or feature dependent	Extract a Service Report through UR Setup software and provide it to GE customer service
DIAGNOSTIC ALARM DSP: Card F8L	Yes	This is a preliminary warning that there is something wrong with a DSP. The slot and DSP type is indicated in the message.	Every protection pass	Extract a Service Report through UR Setup software and provide it to GE customer service
DIAGNOSTICS FAILURE	Yes	This is a warning that there is something wrong with the DSP/coprocessor subsystem. The source of the problem is unknown as there are multiple contributors.	Every protection pass	Extract a Service Report through UR Setup software and provide it to GE customer service
DIRECT DEVICE OFF: COMM Path Incomplete	No	A direct device is configured but not connected	Every second	Check direct input and output configuration and wiring
DOS PARTITION ALARM: SELF-TEST ERROR		There is a problem with the Compact Flash memory in the CPU module	On relay power-up and afterwards once every 24 hours	Contact the factory
FACTORY MODE ACTIVE	No	Factory Mode is active		This is a reminder for the Supervisor (if enabled) or Administrator to disable **Settings > Product Setup > Security > Supervisory > Factory Service Mode** as soon as it is not needed
LOW ON MEMORY: *with 2nd line detail*	Yes	The relay periodically checks the amount of free RAM memory available and the amount of free stack available for each task against pre-defined thresholds. The second line of the self-test indicates which of the tests failed. It asserts this self-test if those tests fail.	Every five seconds	Contact the factory
MAINTENANCE ALERT: 4L Discrepancy	No	A discrepancy has been detected between the actual and desired state of a latching contact output of an installed type "4L" module	Upon initiation of a contact output state change	Verify the state of the output contact and contact the factory if the problem persists

Error	Latched?	Description	Test frequency	Action
Bad IRIG-B Signal	No	A bad IRIG-B input signal has been detected	Monitored whenever an IRIG-B signal is received	Ensure the following: - The IRIG-B cable is properly connected. - Proper cable functionality (that is, check for physical damage or perform a continuity test). - The IRIG-B receiver is functioning. - Check the input signal level (it can be less than specification). If none of these apply, then contact the factory.
Bad PB PTP Signal Bad PTP Signal	No	No PTP enabled port has good PTP signal input	Activated when no acceptable signal is being received	Ensure the following: - The Ethernet cable(s) are properly connected. - At least one PTP grandmaster-capable clock is functioning. - If a strict power profile (PP) is enabled, that entire network is PP compliant. - The network is delivering PTP messages to the relay.
Direct Ring Break	No	Direct input and output settings are configured for a ring, but the connection is not in a ring	Every second	Check direct input and output configuration and wiring
FIRST ETHERNET FAIL SECOND ETHERNET FAIL THIRD ETHERNET FAIL	Yes	A link loss detection on an Ethernet port. The link loss is due to unplugging the cable or the switch port being down.		Check the connection
Front Panel Trouble	No	The graphical front panel is not responsive for more than five seconds. The relay is still protecting, and the main CPU is not affected by this self-test.	Every second	Contact the factory
GFP Version Mismatch	No	The graphical front panel firmware revision is not synchronized with that of the CPU module in the relay	Whenever connection is established between the graphical front panel and the CPU module in the relay	Perform a UR firmware upgrade with the graphical front panel connected to the CPU module in the relay. It can be done using any communication interface (Ethernet or USB). This synchronizes the graphical firmware revision with that of the relay. If trouble persists, contact the factory.
Oscillatory GOOSE	No	A data item in a configurable GOOSE data set is oscillating	Upon scanning of each configurable GOOSE data set	Evaluate all logic pertaining to this item
Replace Battery	Yes	The battery is weak or not functioning. It powers the real time clock. This message displays as Battery Fail in the event records. When the battery weakness reaches a critical level, the message displays persistently on the front panel and no front panel key navigation is possible.	Every five seconds. The error message displays after 60 seconds if the problem persists.	Replace the battery as outlined in the Maintenance chapter. To minimize the disruption until battery replacement, temporarily disable the battery fail function under **Settings > Product Setup > User-Programmable Self Tests**.

Error	Latched?	Description	Test frequency	Action
SFP MODULE # FAIL	No	A faulty small form-factor pluggable port (SFP) or unplugging of the SFP generates this self test message		The web page "SFP Transceiver Information" described in the previous row applies for this self test as well. The "SFP Module Fail" has higher priority and it suppresses the "Ethernet Fail" target message. The "SFP MODULE FAIL FUNCTION" setting enables/disables this self test. The target for this self test is priority-based, with the third one being the highest priority. For example, if all three SFP modules fail, then the third SFP target is activated. If the third SFP module failure resolves, then the second SFP target is activated.
SNTP Failure	No	The SNTP server is not responding	Every 10 to 60 seconds	Check that Ethernet cable(s) are properly connected. Check that configuration for the SNTP server corresponds to the actual server settings. Check connectivity to the server (ping the server IP address). Check that UR settings for both SNTP servers are configured with different IP addresses and port numbers.
PBEthPort-# Offline		Process Bus Module Ethernet port failure. Error registers when an enabled port fails.	Every five seconds	Check connection to network switch/ Merging Unit and network switch
PB SFP Module # Fail		Small form-factor pluggable port (SFP) at back of Process Bus Module is faulty or unplugged	Every five seconds	Connect or replace with same SFP type
PROTOTYPE FIRMWARE: Self Test Error		Seen until the build is tagged as being 'release candidate' or 'gold' build	Seen on startup and then continuous	Update firmware to either of these builds
RRTD COMM FAIL: Self Test Error	No	Communications with remote RTD unit (RRTD) or GPM-F failed for longer than 10 seconds	Runs only if "Com2 Usage" is set to RRTD or RRTD&GPM-F. Checked every five seconds.	Check COM2 port settings, check RS485 cables
RxGOOSE FAIL: Missing messages	No	One or more RxGOOSE messages are not being received	The self-test is activated when no message is received within the expected time interval, which is the time-to-live time in the previous message. This time can be from milliseconds to minutes.	Check GOOSE setup
RxGOOSE OFFLINE: COMM Path Incomplete	No	One or more RxGOOSE messages are not responding	Event driven. The test is performed when a device programmed to receive GOOSE messages stops receiving. This can be from 1 to 60 seconds, depending on GOOSE packets.	Check GOOSE setup

Error	Latched?	Description	Test frequency	Action
OSC FIXED GOOSE: Self Test Error	No	A FlexOperand configured in DNA and UserSt bit pair is oscillating	Upon scanning each DNA or UserSt bit pair	Check Fixed GOOSE oscillation history on UR web page and evaluate all logic pertaining to this item
Self-Test Error AGGR CONFIG MISMATCH	Yes	There is a limitation when using six PMUs. The self-test trips when any of the following acceptable conditions are violated. - Two aggregators are allowed when using six PMUs, IEEE C37.118, and a 120/100 reporting rate - One ASDU is allowed when using six PMUs, IEC 90-5, and a 60/50 reporting rate - One ASDU and one aggregator are allowed when using six PMUs, IEC 90-5, and a 120/100 reporting rate	Event driven	Reconfigure aggregators according to the rules, as follows: - For C37.118 with six PMU software option, the following is acceptable: a. 20/100 reporting rate: 2 aggregators are allowed - For 90-5 with six PMU software option, the following are acceptable a. 60/50 reporting rate: six PMUs can be supported with one ASDU only b. 120/100 reporting rate: six PMUs can be supported with one ASDU and one aggregator combination only
SETTINGS SAVE ERROR: Contact Factory	Yes	The relay failed to store the settings to the flash memory	When a setting is changed	Contact the factory
STORAGE MEDIA ALARM: Self Test Error	No	The CPU module fails to read from or write to the Compact Flash (CF) card inside the module. The CF card stores certain non-volatile data, such as event records, oscillography and datalogger records, fault report values, and non-volatile actual values. Settings are not stored in CF and hence are unaffected by this self-test.	On power up. Afterwards, every time the CPU accesses the CF card for reading or writing	Contact the factory

Error	Latched?	Description	Test frequency	Action
SV# STREAM TROUBLE ON	Yes	Asserted when 1. "3 out of 5 lost" errors are detected 2. No sampled values have been received for ~2 power cycles 3. Mismatch of test mode or simulation bit between UR and subscribed SV streams 4. Merging units subscribed by UR are not synchronized to the same grandmaster and the drift is ~2 power cycles 5. Sampled values subscribed by the relay are not synchronized according to the **SMPSYNCH CHECK** setting defined in the relay 6. Quality of the received sampled values is not acceptable (either the quality is invalid, or questionable with Quality Check = Reject Questionable)	Every protection pass	Check: 1. Connection between Merging Unit (MU) and relay 2. SV stream configuration in the relay is matching the SV stream, for example check svID and confRev fields 3. Check the **Actual Values > PB Module > RXSV status> rxsv1(16)** page in the EnerVista software to verify the Sync Status, Quality, and delays of the received sampled values and troubleshoot accordingly 4. Check that all merging units subscribed by the UR are synchronized according to the **SMPSYNCH CHECK** setting
SYSTEM EXCEPTION: Press RESET key	Yes	Abnormal restart from modules being removed or inserted while the N60 is powered-up, when there is an abnormal DC supply, or as a result of internal relay failure.	Event driven	Contact the factory
TEMP MONITOR: OVER TEMPERATURE	Yes	The ambient temperature is greater than the maximum operating temperature (+80°C)	Every hour	Remove the N60 from service and install in a location that meets operating temperature standards
UNIT NOT CALIBRATED: *with 2nd line DSP slot number detail*	Yes	DSP module is not calibrated or calibration data is out of range	On relay startup	The respective DSP module has to be replaced, contact factory service
VOLTAGE MONITOR: *with 2nd line detail* Power Supply 12V Low Power Supply 12V High Power Supply 5V Low Power Supply 5V High	Yes	The relay detected a problem with the internal voltage rails for longer than 25 seconds	Every five seconds	Contact GE customer service

Error	Latched?	Description	Test frequency	Action
WRONG TRANSCEIVER: Self Test Error	Yes	The type of SFP does not match the CPU type. The SFP is a silver device that plugs into the rear of the CPU module. T-type CPU = All ports support fiber SFPs only U-type CPU = Maintenance port needs RJ45 SFP and the other two ports fiber SFPs V-type CPU = All ports support RJ45 SFPs only The consequence of an incorrect SFP can range from damage to the N60 to no power information for the N60 on its web page (enter IP address in a web browser, then click the **SFP Transceiver Information** — only the type of SFP displays and not power data).		A web page "SFP Transceiver Information" is provided. This page displays the type of the SFP in it. This data is to be used with the CPU type to know the cause of the problem.

7.2.2.4 Instantaneous protection elements trip security

Some self-tests are not fast enough to detect erroneous data and block protection elements, requiring additional measures. A bit-flip in program memory is typically detected during a memory scan, which may be too late to inhibit instantaneous protection element. To secure instantaneous elements, in addition to the self-tests described, there are supervising elements that validate “fault” conditions and release IOC and differential elements operation.

These trip security elements use currents samples and phasors from the same sources as supervised protection elements to detect independently true “fault” conditions from IOC or differential. Trip security elements do not have any user settings and are enabled as soon as corresponding instantaneous elements are enabled. During laboratory testing, these elements can be disabled by activating any IED test mode via the **SETTINGS ⇨⇩ TESTING ⇨ IED MODE CONFIG** menu by setting **IED MODE** to anything except “On.”

Trip security elements do not affect protection performance in any way.

Instantaneous Overcurrent

All enabled Phase IOC, Negative-Sequence, and Neutral IOCs in the active setting group are supervised by the trip security element. The goals of the IOC trip security are as follows:

- Detect erroneous operate current due to wiring or data acquisition problem resulting in one phase current dropping to zero, resulting in erroneous negative-sequence and neutral currents
- Justify current phasor magnitude increase with simultaneous current changes from samples

This is achieved by comparing current values of the current phasors and samples change with the values taken two cycles before. Additionally, trip security elements monitor "pre-fault" current to detect if operate condition is happening as a result of current decrease instead of increase.

The element is armed when there are no disturbances in currents for five cycles.

Differential elements (bus, transformer, stator, if applicable to the product)

Differential trip security runs for each differential zone. It monitors if differential current increase above the pickup setting is confirmed by the disturbance detectors 50DD for each differential zone input. When a differential zone fault occurs and at least two zone inputs carry some load, at least two disturbance detectors have to be activated. Or when there is no load at any zone inputs (zone is energized but does not carry any load), at least one disturbance detector has to be activated.

Consequently:

- If there is not any disturbance detector activation in at least one zone input — Differential trip is inhibited
- If there is just one zone input disturbance detector activation but load is present in at least two zone inputs prior to the "fault" — Differential trip is inhibited
- If there is more than one disturbance detector zone input activation — Differential trip is allowed (normal scenario)
- If differential trip is inhibited by the trip security element —active setting group change is not allowed

Activation of the 50DDs is essential especially when there is load in at least two zone inputs prior to the zone fault. Sensitivity of the 50DD is defined by the **SETTINGS ⇨⇩ PRODUCT SETUP ⇨⇩ DISPLAY PROPERTIES ⇨ CURRENT CUT-OFF LEVEL** setting with a range of 0.002pu to 0.02pu of the zone input CT. In case of the high-resistive zone fault there may be enough current change in the source zone input causing sufficient differential current, but small change in the load zone input-this situation can be addressed by reducing **CURRENT CUTOFF LEVEL** setting to the sufficient sensitivity level. 50DD operates if there is a change at least 2 x CUTOFF in either positive-sequence, or negative sequence or zero-sequence currents.

7.2.2.5 HardFiber major self-test error messages

In addition to those provided by the standard UR-series devices, the UR devices implement HardFiber self-tests. These are listed here. Any abnormal diagnostic condition indicated by the LEDs or the critical failure relay also results in a self-test message, so troubleshooting is described here. For other relays, such at the B95^{Plus}, see that product's instruction manual.

Table 7-4: HardFiber major self-test errors

Error	Description	Severity	Action
EQUIPMENT MISMATCH	The number or type of installed hardware modules does not match the order code stored in the CPU. The standard UR-series Equipment Mismatch self-test is extended to cover the possible presence of a Process Card.	Protection is not available and all contact outputs and shared outputs are de-asserted	Check all modules against the order code. Ensure they are inserted properly, and cycle the control power. If a module has intentionally been added or removed use the Update Order Code command to notify the relay that the current module configuration is correct.
MODULE FAILURE	UR-series device module hardware failure detected	Protection is not available and all contact outputs and shared outputs are de-asserted	Contact the factory and supply the failure code noted in the display. Text in the message identifies the failed module (for example, H81). If operated on a Process Card failure, the Module Fail self-test seals-in (latches) till the UR-series device is restarted.
PROCESS BUS FAILURE	Mission critical data is not available via the process bus. An AC quantity is considered critical if both AC bank origins and the crosschecking settings are other than None. This self-test is also initiated by an AC input discrepancy being detected. See the description in the **Crosschecking** setting in the HardFiber manual for further information. In addition, this self-test can be initiated by user logic responding to loss of critical contact input/output or other data using the **Process Bus Failure Operand** user-programmable self-test setting. This setting is located in the **Settings > Product Setup > User-Programmable Self Test** menu.	Protection is not available and all contact outputs and shared outputs are de-asserted	First rectify any Process Bus Trouble and Brick Trouble self-test errors. Check the actual value of the operand referenced by the Process Bus Failure Operand setting, and if "On," determine the cause and rectify. If the problem persists with the foregoing all clear, the cause must be an AC input discrepancy, which is typically the result of problems in the input signals to the Bricks, or faults in the Brick input conditioning hardware. If the error was annunciated the first time significant signal was encountered, suspect the former cause and check the copper connections external to the Brick. Where multiple UR-series devices have self-test errors, look for common causes. To further isolate AC input discrepancy errors, put the relay in test-isolated mode, then one by one, temporally change an AC bank Crosschecking setting to None, until the Process Bus Failure clears. Once the problem AC bank has been identified, the values from each of the two Bricks can be examined individually by temporarily mapping each to an AC bank with a single origin.

7.2.2.6 HardFiber minor self-test error messages

Table 7-5: HardFiber minor self-test errors

Error	Description	Severity	Action
BRICK TROUBLE	Brick internal self-testing has detected trouble internal to the Brick	This self-test error does not directly inhibit protection. However, some or all of the affected Brick inputs/ outputs may not be available to the UR device.	Check the Brick environment for over/under temperatures and the voltage of its power source. If the ambient temperature and supply voltage are within Brick specifications, consult the factory. Troubles resulting from a Brick output failing to respond to an output command can only be detected while the command is active, and so in this case the target is latched. A latched target can be unlatched by pressing the front panel reset key if the command has ended, however the output can still be non-functional.
PROCESS BUS TROUBLE	Communications problems with one or more Bricks. The text of the message identifies the affected field units. This self-test is initiated by low received signal levels at either the Brick or Process Card end, and by the sustained failure to receive poll responses from the proper Brick.	This self-test error does not directly inhibit protection. However, the affected Brick inputs/outputs may not be available to the UR device.	Check the field unit actual values. An indication of equipment mismatch means that messages are being received from a Brick, but there is a discrepancy between the settings and the actual Brick serial number, order code, and/or core number. Check that the correct core on the correct Brick is patched through to the correct Process Card port, and that the field unit settings are correct. An indication of communications loss means that no messages are being received. Check that the patching is correct, and that the Brick has power. If that is not the problem, use a professional optical fiber connector cleaning kit to clean both sides of all optical fiber connections from the Process Card through to the affected Brick. If the problem continues after cleaning, consult the factory.
RTD TROUBLE: Self Test Error	The Brick is reporting that the sensed RTD field connection does not match that of an RTD or the reported DC input value is outside of the RTD temperature range, greater than 250°C (likely open sensor circuit fault) or less than -50°C (likely shorted sensor fault).	Not latched	Check field RTD settings and connections
TDR TROUBLE: Self Test Error	The Brick is reporting that the sensed transducer field connection does not match that of a transducer, or the reported DC input value is outside of the set transducer input range, or the minimum value setting is equal to the maximum value setting.	Not latched	Check field transducer settings and connections

N60 Network Stability and Synchrophasor Measurement System

Chapter 8: Commissioning

This chapter outlines how to test frequency timing.

8.1 Testing

8.1.1 Testing underfrequency and overfrequency elements

Underfrequency and overfrequency protection requires techniques with subtle testing implications. Whereas most protection is designed to detect changes from normal to fault conditions that occur virtually instantaneously, power system inertia requires frequency protection to pick up while the frequency is changing slowly. Frequency measurement is inherently sensitive to noise, making high precision in combination with high speed challenging for both relays and test equipment.

Injection to a particular N60 frequency element must be to its configured source and to the channels that the source uses for frequency measurement. For frequency measurement, a source uses the first quantity configured in the following order:

1. Phase voltages
2. Auxiliary voltage
3. Phase currents
4. Ground current

For example, if auxiliary voltage and phase currents are configured, the source uses the auxiliary voltage, not the phase voltages or any of the currents.

When phase voltages or phase currents are used, the source applies a filter that rejects the zero-sequence component. As such, the same signal must not be injected to all three phases, or the injected signal is completely filtered out. For an underfrequency element using phase quantities, the phase A signal must be above the **MIN VOLT/AMP** setting value. Therefore, either inject into phase A only, or inject a balanced three-phase signal.

Figure 8-1: Typical underfrequency element test timing

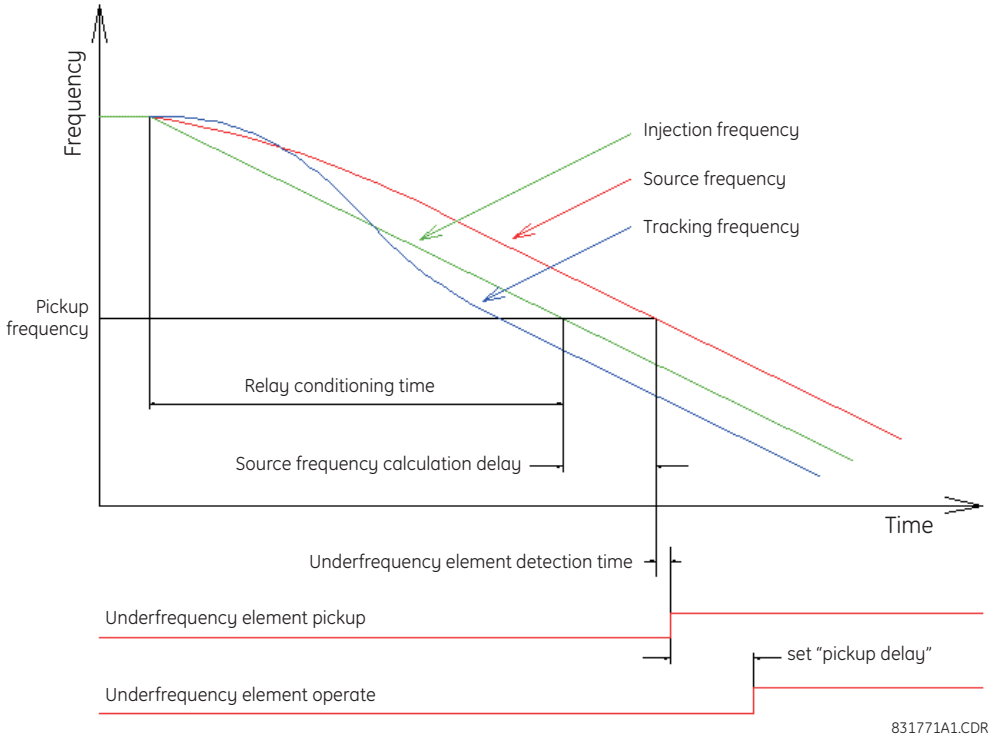

The static accuracy of the frequency threshold is determined by slowly adjusting the frequency of the injected signal about the set pickup. If the N60 frequency metering feature is used to determine the injected frequency, verify the metering accuracy by checking it against a known standard (for example, the power system).

To accurately measure the time delay of a frequency element, a test emulating realistic power system dynamics is required. Let the injected frequency ramp smoothly through the set threshold, with the ramp starting frequency sufficiently outside the threshold so that the relay becomes conditioned to the trend before operation. For typical interconnected power systems, the recommended testing ramp rate is 0.20 Hz/s.

The required delay time is the interval from the point the frequency crosses the set threshold to the point that the element operates. Some test sets can measure only the time from the ramp start to element operation, necessitating the subtraction of the pre-threshold ramp time from the reading. For example, with a ramp rate of 0.20 Hz/s, start the ramp 0.20 Hz before the threshold and subtract 1 second from the test set time reading of ramp start to relay operation.

Note that the N60 event records only show the "pickup delay" component, a definite time timer. This is exclusive of the time taken by the frequency responding component to pickup.

N60 oscillography can be used to measure the time between the calculated source frequency crossing the threshold and element operation; however, this method omits the delay in the calculated source frequency. The security features of the source frequency measurement algorithm result in the calculated frequency being delayed by two to four cycles (or longer with noise on the input). In addition, oscillography resolution is 0.004 Hz, which at 0.20 Hz/s corresponds to a delay of 20 ms. Do not use the tracking frequency in timing measurements, as its algorithm involves phase locking, which purposely sets its frequency high or low to allow the N60 sample clock to catch-up or wait as necessary to reach synchronism with the power system.

N60 Network Stability and Synchrophasor Measurement System

Chapter 9: Maintenance

This chapter outlines monitoring, maintenance, repair, storage, and disposal of the hardware and software.

9.1 Monitoring

Devices and data can be monitored.

9.1.1 Devices with Site Targets

To view an overview of devices:

1. Access the **Site Targets** item in the Online Window area, below the list of devices. It can take a few minutes for all devices to be read.
2. Acknowledge any messages for unaccessible devices. The Site Targets window opens when done.

Figure 9-1: Site Targets window

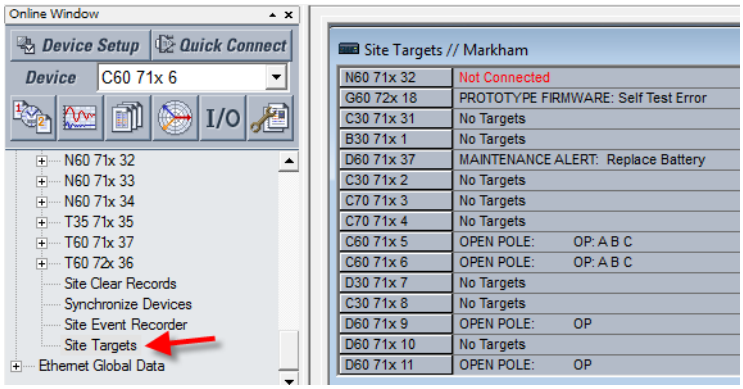

9.1.2 Data with Modbus Analyzer

Use the Modbus Analyzer under **Maintenance > Modbus Analyzer** to monitor the values of the UR device. Use the Modbus memory map addresses outlined in the UR Family Communications Guide for the entries.

The upper part of the window displays values. The lower part of the window is for factory service use.

The first row in the figure shows that Contact Output 1 operation is being monitored. Its Modbus address is CAFA. The actual value read from the device is 0, which means that it is off.

The second row in the figure shows the Contact Output 1 Name. It has a Modbus address of CAF0 and a default value of "Cont Op 1." None of **Selection** column settings render this value because they present the information based on numbering systems.

Figure 9-2: Modbus Analyzer used to monitor actual values on a UR

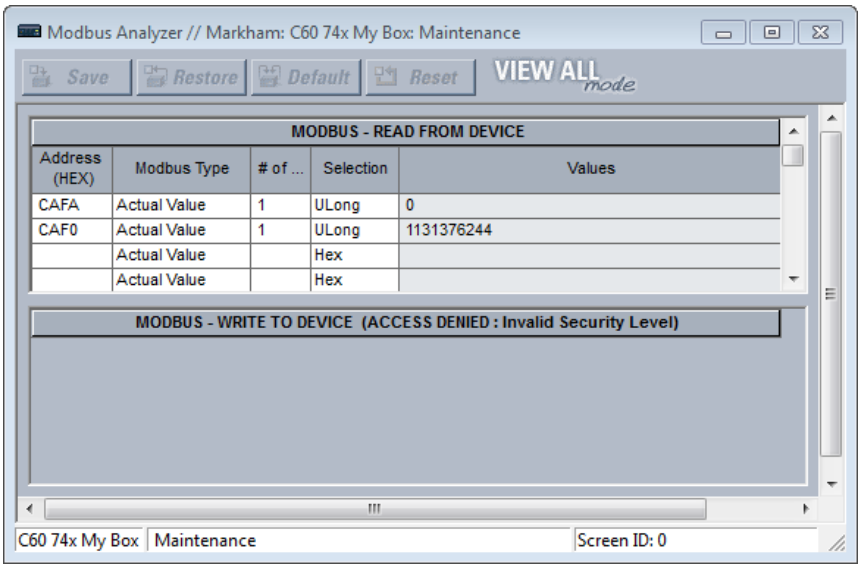

Address (HEX) — Modbus address in hexadecimal. See the Modbus memory map in the UR Family Communications Guide or in the web interface (enter IP address of UR device in a web browser). Convert the decimal address in the Modbus memory map to hexadecimal.

Modbus Type
Actual Value — To read the data in the UR device
Setting — To read a setting in the UR device
Coil — To read a command in the UR device

 # of — Element, input, or output to read. An example is 1 for Contact Output 1.

Selection (examples demonstrate various ways to represent 0)
Hex — A decimal numbering system based on 16 possible values, from 0 to 9 and A to F. An example is 0x0000.
Char — A single unicode character, such as C. An example is 0.
Int — A 32-bit number, either positive or negative. An example is 0.
UInt — Unsigned 32-bit integer, which means that it cannot be negative but can be twice as large as a signed integer. An example is 0.
Long — A 64-bit number, either positive or negative. An example is 0.
ULong — Unsigned 64-bit number, which means that it cannot be negative but can be twice as large as a signed 64-bit number. An example is 0.
Float — A numbering system with no fixed number of digits before or after the decimal point. An example is 0.000000.
Binary — A numbering system using 0 and 1. An example is 0000-0000-0000-0000.

9

Entries are not saved when closing the window.

9.2 General maintenance

The N60 requires minimal maintenance. As a microprocessor-based relay, its characteristics do not change over time. Expected service life is 20 years for UR devices manufactured June 2014 or later when applied in a controlled indoor environment and electrical conditions within specification.

While the N60 performs continual self-tests, it is recommended that maintenance be scheduled with other system maintenance. This maintenance can involve in-service, out-of-service, or unscheduled maintenance.

9.2.1 In-service maintenance

1. Visual verification of the analog values integrity, such as voltage and current (in comparison to other devices on the corresponding system).
2. Visual verification of active alarms, relay display messages, and LED indications.
3. LED test.
4. Visual inspection for any damage, corrosion, dust, or loose wires.
5. Event recorder file download with further events analysis.

9.2.2 Out-of-service maintenance

1. Check wiring connections for firmness.
2. Analog values (currents, voltages, RTDs, analog inputs) injection test and metering accuracy verification. Calibrated test equipment is required.
3. Protection elements setting verification (analog values injection or visual verification of setting file entries against relay settings schedule).
4. Contact inputs and outputs verification. This test can be conducted by direct change of state forcing or as part of the system functional testing.
5. Visual inspection for any damage, corrosion, or dust.
6. Event recorder file download with further events analysis.
7. LED Test and pushbutton continuity check.

NOTICE To avoid deterioration of electrolytic capacitors, power up units that are stored in a de-energized state once per year, for one hour continuously.

9.2.3 Unscheduled maintenance (system interruption)

View the event recorder and oscillography or fault report for correct operation of inputs, outputs, and elements.

9.3 Retrieve files

Data, oscillography, log, events, routing, ARP, and other files can be transferred using the EnerVista software when using the graphical front panel. These files can be requested by technical support staff.

To retrieve a file using EnerVista software:

1. If the CyberSentry option is enabled, log in to the EnerVista software using the Administrator role.
2. In the Online Window area of EnerVista, access **Maintenance > Retrieve File**. The window opens.
3. Note the destination folder to which the file is to be saved at the top and change it if required. You can copy the path or open the folder for convenience at this time.
4. Select the file to download from the UR device.

5. Click the **Read File** button. The file is saved to the destination folder. The EnerVista window remains open to download additional files.

9.3.1 CyberSentry security event files

CyberSentry security events are available in the following two files: SECURITY_EVENTS.CSV and SETTING_CHANGES.LOG.

9.3.1.1 Security events file

The figure shows the content for the SECURITY_EVENTS.CSV file.

Figure 9-3: Security events file

	A	B	C	D	E	F	G	H	I	J
1	FORMAT	EVENT_INFO_1	Event Number	Data/Time	Username	IP Address	Role	Activity Value	Change Method	
2		EVENT_INFO_1	71	Feb 08 2016 10:07:20.893820	Observer	10.14.127.1	0	14	5	
3		EVENT_INFO_1	72	Feb 08 2016 10:07:20.931321	Observer	10.14.127.1	0	15	5	
4		EVENT_INFO_1	73	Feb 08 2016 10:07:41.314660	Administrator	10.14.127.1	1	14	5	
5		EVENT_INFO_1	74	Feb 08 2016 10:07:54.383404	Administrator	10.14.127.1	1	10	5	
6		EVENT_INFO_1	75	Feb 08 2016 10:07:58.187574	Administrator	10.14.127.1	1	9	5	
7		EVENT_INFO_1	76	Feb 08 2016 10:08:01.991740	Administrator	10.14.127.1	1	6	5	
8		EVENT_INFO_1	77	Feb 08 2016 10:08:42.908413	Administrator	10.14.127.1	1	6	5	
9		EVENT_INFO_1	78	Feb 08 2016 10:08:43.493822	Administrator	10.14.127.1	1	6	5	
10		EVENT_INFO_1	79	Feb 08 2016 10:09:46.908404	Administrator	10.14.127.1	1	6	5	
11		EVENT_INFO_1	80	Feb 08 2016 10:14:44.958406	Keypad	0.0.0.0	3	14	1	

Time — Local time.

Activity — The actual security event.

1 = Authentication Failed
2 = User Lockout
3 = FW Upgrade
4 = FW Lock
5 = Settings Lock
6 = Settings Change, this can fill the entire event log. Hence it is supported by the already existing SETTINGS_CHANGE.LOG file. This event is not required.
7 = Clear Oscillography command
8 = Clear Data Logger command
9 = Clear Demand Records command
10 = Clear Energy command
11 = Reset Unauthorized Access
12 = Clear Teleprotection Counters
13 = Clear All Records
14 = Role Log out
15 = Role Log in
16 = Factory Mode enabled
17 = Factory Mode disabled

Change Method — Format code F229 for the settings control change method.

0 = None
1 = Keypad
2 = Front port
3 = COM1 (not used)
4 = COM2 (RS485)
5 = Ethernet

9.3.1.2 Setting changes file

The SETTING_CHANGES.LOG file stores all the setting changes. A total of 1024 events are stored in a circular buffer in volatile memory.

Figure 9-4: Setting changes file

```
SETTING_CHANGES.LOG - Notepad
File  Edit  Format  View  Help
FORMAT,CHANGE_INFO,Data/Time,Old Value,New Value,Data Item,Modbus Address
CHANGE_INFO,Feb 05 2016 11:06:41.550070,No,No,Clear All Relay Records Command,0xC434
CHANGE_INFO,Feb 05 2016 11:08:30.535489, 1.0s, 1.1s,Flash Message Time,0x4050
CHANGE_INFO,Feb 05 2016 11:09:01.877154,No,No,Event Recorder Clear Command,0x3406
CHANGE_INFO,Feb 05 2016 11:09:10.243824,No,No,Oscillography Clear Data,0x3011
CHANGE_INFO,Feb 05 2016 11:10:05.820902,Virt Op 1,VirtOp1 IOPT,Virtual Output x Name,0xC130
CHANGE_INFO,Feb 05 2016 11:18:28.745903,No,No,Energy Clear Command,0x1D60
CHANGE_INFO,Feb 05 2016 11:18:32.960484,No,No,Reset Unauthorized Access,0x2230
CHANGE_INFO,Feb 05 2016 11:21:31.975071, 1.1s, 1.2s,Flash Message Time,0x4050
CHANGE_INFO,Feb 05 2016 11:22:09.393817,Disabled,Enabled,Virtual Output x Events,0xC136
CHANGE_INFO,Feb 05 2016 11:22:09.995902,Virt Op 2,VirtOp RST1,Virtual Output x Name,0xC138
CHANGE_INFO,Feb 05 2016 11:22:09.997997,Disabled,Enabled,Virtual Output x Events,0xC138
CHANGE_INFO,Feb 05 2016 11:25:59.914652,Relay-1,Markham Site,Relay Name,0x43E1
```

9.4 Convert device settings

Settings files can be upgraded or downgraded to other firmware versions. For example, version 7.4 settings can be upgraded to version 7.6.

Settings are reset to factory default upon conversion. For a graphical front panel, for example when upgrading from version 7.6 to 7.7, single-line diagrams and cells configured for the Metering Editor are defaulted, while other graphical front panel settings are retained.

When converting a settings file from version 7.20 or earlier to 7.70 or later, any IEC 61850 settings are defaulted, and Edition 2 is used.

When converting a settings file from version since 7.30 inclusive to 7.70 or later, any IEC 61850 settings are converted and Edition 2 is used.

When converting a settings file with IEC 61850 Edition 1 to version 7.80 or later with a non-HardFiber Process Bus Module (order code 85, 86, or 87), conversion does not take place and an error message displays. The Process Bus Module does not support Edition 1.

Conversions between PBM and non-PBM order codes are not permitted.

With version 8.00 and later, when a file is converted between order codes, the logical node prefix names and instance numbers are defaulted and the respective dataset member references are removed.

To convert settings:

1. If not already in the Offline Window area, right-click the online device in the EnerVista software and select the **Add Device to Offline Window** option. This copies the settings to the Offline Window area. Any message about file repair usually means that settings were missing in the original file and have been added with default values to the new file.
2. Make a copy of the settings file in the Offline Window area by right-clicking the file and selecting **Duplicate Device**. A copy of the file is made and the file name start with “Copy of”. Optionally rename the file by right-clicking it and selecting the **Rename Device** option.
3. Convert the settings by right-clicking one of the files in the Offline Window and selecting the **Convert Device Settings** option.

   If the option does not display, click the **Admin > User Management** menu item and enable the **Update Info** check box for the user. Save.

   Or if the option does not display, click the **Admin > User Management** menu item and enable the **Enable Security** check box. Save. Select the **Admin > User Login** menu item. Enter "Administrator" for the user and enter the password. (Contact GE Grid Solutions if you do not know the default password.)

GE recommends converting settings in firmware steps, for example when converting from 6.0 to 7.4x, convert first to 7.0 then 7.4 in order to follow embedded conversion rules and keep settings.

The settings convert and a report generates.

Figure 9-5: Upgrade settings

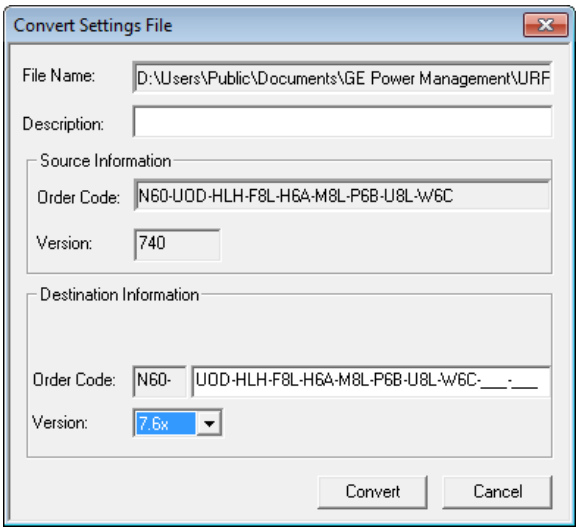

4. Review the conversion report. The values of all settings that have been defaulted during conversion are not listed in the conversion report; to find the value of a setting before conversion, inspect the device backup file made before conversion.

   In the example shown here, settings have been reset to factory defaults and several settings are new in firmware version 7.6 under **Settings > System Setup > Switches** and **Breakers**.

Figure 9-6: Conversion report

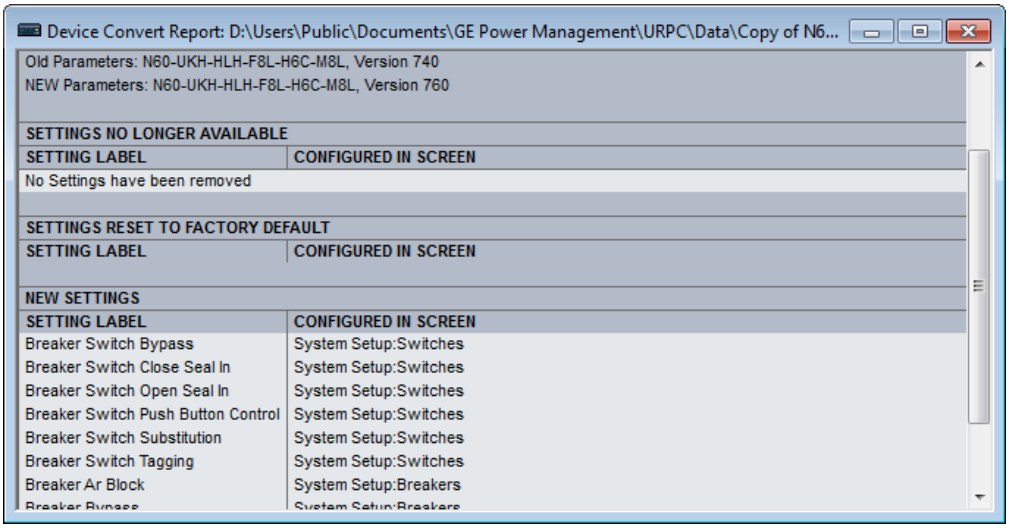

5. Change settings in the new file, for example by looking at the original file.
6. Write the converted file to the device, for example by dragging and dropping from the Offline Window to the Online Window.
7. Check settings and operation.

9.5 Copy settings to other device

Settings from one N60 device can be copied to another N60 device for rapid deployment. The order codes and IEC 61850 edition must match. See the Settings File section at the beginning of the Interfaces chapter for a list of settings not deployed.

1. Right-click the device in the Online window and select the **Add Device to Offline Window** option. A window opens.
2. Check the file path and name the file, then click the **Receive** button. An example is to save the files in D:\Users\Public\Public Documents\GE Power Management\URPC\Data\ and to name the source device N60_Deployment. At the prompt, confirm the action. The settings are saved in .cid, .icd, and .urs files, and the entry displays in the Offline window area.
3. Right-click the device in the Offline window area and select the **Duplicate Device** option. The device is copied with a prefix of "Copy of." Multiple duplicates results in files being named "Copy of Copy of" for example, which can be avoided by deleting the folder copies from the path shown on mouse-over.
4. Right-click the copied device and rename it.
5. Right-click the copied device and select the **Edit Device Properties** option. Make the changes for the new device.
6. Send the file to new device by dragging and dropping it into the Online Window area. Or right-click and select the **Write Settings to Device** option.
7. Update the remaining settings, such as IP address.

9.6 Export settings

All or specific groups of settings are exportable.

1. Right-click a device in the Offline Window area and select the **Export Settings** option. A window opens. When the **Export All Settings** option is enabled, the individual settings groups are inactive.

Figure 9-7: Export settings

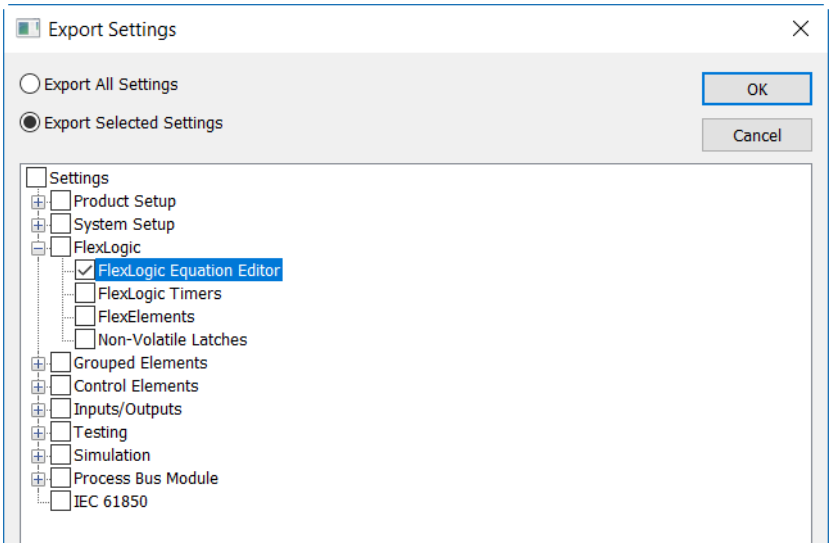

2. For groups of settings, enable the **Export Selected Settings** option, then enable the check boxes of the options to export. The example shows that FlexLogic equations are to be exported.
3. Click the **OK** button, and specify a file name in the window that opens. The format is XML. Click the button to start the export, which takes a minute or two.

If prompted about a file being repaired, review the report. The path to the file displays, and otherwise it sits with the URS, CID, and ICD files of the device with a file name of _Repair_Report.txt, such as B30 81x_Repair_Report.txt. The example shows that some settings were added at default values. The explanation is that the EnerVista software was updated, but the offline file predates the update.

Figure 9-8: Settings report

```
This device contains a list of settings that were missing in the original file.
The following settings have been added to this setting file and were set to their default values.

INITIATE TEST MODE ON SIM,L=2039,G=1,M=1,I=1
SIM MODE CTRL VIA IEC 61850,L=3869,G=1,M=1,I=1
SIM MODE INPUT,L=3870,G=1,M=1,I=1
```

9.7 Compare settings

Settings are comparable against default values and between two UR devices.

Some of the IEC 61850 settings use floating point data, which guarantees accurate representation of real numbers up to seven digits. Numbers with more than seven digits are approximated within a certain precision. This can result in differences between what is entered and what is saved, and for example results in differences shown on a settings comparison report.

When comparing two settings files with the graphical front panel, all graphical front panel features are compared except for the single-line diagrams.

9.7.1 Compare against defaults

1. Right-click the device in the Offline Window area and select **Compare Settings With Defaults**. The file generates and the number of differences displays.
2. To save the report, click **File > Save As**, select the TXT, PDF, or CSV format from the drop-down list, and enter a name for the file.

In the figure, the first entry is from the device, while the second is the default value.

Figure 9-9: Device settings compared with default values

```
137,  File1 , Trip Bus Input, 1__1__3, 1 (ON)
138,  File2 , Trip Bus Input, 1__1__3, 0 (OFF)
139,  File1 , Virtual Output Events, 1__64__1, 0 (Disabled)
140,  File2 , Virtual Output Events, 1__64__1, 1 (Enabled)
141,  File1 , Virtual Output Name, 1__64__1, Virt Op 64
142,  File2 , Virtual Output Name, 1__64__1, Osc Trigger
```

9.7.2 Compare two devices

Preferences are set under **File > Preferences** as follows:

- **Comparison Report: Sequential File 1, File 2 Layout** — When disabled (default), the report shows only what differs, as shown in the previous figure. When enabled, the report indicates differences by device.

Figure 9-10: Device settings compared between two devices, displayed sequentially

```
1,  File2 , Existing 7.40 IEC61850 settings removed., ____, New IEC61850 settings added with default values.
2,  File2 , Bkr Phase A Open, 1__1__1, 0 (OFF)
3,  File2 , Bkr Phase B Open, 1__1__1, 0 (OFF)
4,  File2 , Bkr Phase C Open, 1__1__1, 0 (OFF)
5,  File2 , Breaker Restrike Block, 1__1__1, 0 (OFF)
6,  File2 , Breaker Restrike Block, 1__2__1, 0 (OFF)
7,  File2 , Breaker Restrike Brk Open, 1__1__1, 0 (OFF)
8,  File2 , Breaker Restrike Brk Open, 1__2__1, 0 (OFF)
9,  File2 , Breaker Restrike Cls Cmd, 1__1__1, 0 (OFF)
10  File2 , Breaker Restrike Cls Cmd, 1__2__1, 0 (OFF)
```

There are two ways to compare devices: devices in the Offline area or between Online and Offline devices.

To compare settings of two devices in the Offline Window area:

1. Right-click a first device in the Offline Window area and select **Compare Two Devices**.
2. In the window that opens, select a second device and click the **OK** button. The file generates and the number of differences displays.
   Alternatively, in the window that opens, enter a path/file name at the bottom of the window; users can select either a URS or a CID file. When selecting URS files users should be aware that for IEC 61850 order codes the information in a URS data file is incomplete and therefore a comparison with an IEC 61850-enabled device will show many differences.
3. To save the report, click **File > Save As**, select the TXT, PDF, or CSV format from the drop-down list, and enter a name for the file.

To compare settings between Online and Offline devices:

1. Right-click a device in the Online Window area and select **Compare with Device**.
2. In the window that opens, select an offline device and click the **OK** button. The file generates and the number of differences displays.
   Alternatively, in the window that opens, enter a path/file name at the bottom of the window; users can select either a URS or a CID file. When selecting URS files users should be aware that for IEC 61850 order codes the information in a URS data file is incomplete and therefore a comparison with an IEC 61850-enabled device will show many differences.
3. Click the **OK** button. The file generates, and the differences are highlighted in red, which is for the first device.

9.8 Back up and restore settings

Back up a copy of the in-service settings for each commissioned UR device, so as to revert to the commissioned settings after inadvertent, unauthorized, or temporary setting changes are made, after the settings defaulted due to firmware upgrade, or when the device has to be replaced. This section describes how to backup settings to a file and how to use that file to restore the settings to the original relay or to a replacement relay.

For reference, settings can saved with **Online > Print Device Information** and **Online > Export Device Information**. They cannot be restored using these options.

9.8.1 Back up settings

The following file types can be saved:

- URS — UR settings file — When the IEC 61850 option is not present
- IID — Instantiated IED capability description file — Actual settings on UR
- ICD — IED Capability Description file — Default settings on UR
- CID — Configured IED description file — Settings sent to the UR (may or may not contain the present settings)

UR device settings can be saved in a backup URS file using the EnerVista UR Setup software. The URS file is the standard UR settings file. For an introduction to settings files in the URS format, see the beginning of the Interfaces chapter.

When the IEC 61850 option is present, the settings can be saved alternatively in a backup IID file either using the EnerVista UR Setup software in online mode or by using any of the supported file transfer protocols. The IID file is one of several IEC 61850 Substation Configuration Language (SCL) file types; see the IEC 61850 chapter in the UR Series Communications Guide for an introduction to SCL.

"TBD" displays when a setting in a modeled element is configured with a non-modeled operand. For example, Phase IOC is modeled in a firmware release, while the LED operands are not modeled. If the block setting of the Phase IOC is configured with LED operands, its displays as TBD in IID and CID files, the web interface, or in an MMS client.

The options that display in the EnerVista software when right-clicking depend on device options.

Preferences are set in the **File > Preferences > IEC 61850** menu. There are two options as follows:

- **Preserve custom attributes when importing SCD/CID files** — Applies to the **Add Device to Offline Window** option. When enabled, the IID file also is to be copied to the computer. The IID file that is retrieved from the relay is therefore assumed to be in synchronization with the resulting .urs file, and in fact in this situation the IID file on the computer is a copy of the IID file that was read from the online device. When disabled, the IID file on the computer is to be left unchanged. The location of the IID file is C:\ProgramData\GE Power Management\urpc\Offline, for example.
- **Do not update IID file when updating SCL files** — When enabled (default), an IID file is not to be created on the computer and if one is already present there, it is neither removed nor updated. Have this option enabled when you want to keep the IID file from the UR device instead of from another tool. The location of the file is C:\ProgramData\GE Power Management\urpc\Offline, for example.

An Environment backup stores a list of sites and devices in the Online and Offline Window areas. Settings files are not contained within the environment file. If a settings file is moved, renamed, or deleted after the backup, it is removed from the Offline Window during the restore.

To save a settings file in the URS format in EnerVista Online Window:

1. In EnerVista, connect to the device in the Online Window area.
2. Right-click the device name in the Online Window area and select **Add Device to Offline Window**. A window opens.
3. Select or enter a file name and location, and click the **Receive** button. A .urs file is created in the Offline Window area.

To create a new settings file in the URS format in EnerVista Offline Window:

1. In EnerVista, right-click in the Offline Window area and select **New Device**. A window opens.
2. Change the file name at the end of the **Path** field, keeping the .urs extension.
3. From the **Associate File with Device** drop-down list, select the UR device. Other fields complete automatically. Otherwise, when you do not select a device from the drop-down list, all fields need to be completed manually and only devices that match the entered order code and version display in the list.
4. The **Serial # Lock** field is the serial number of the intended device. It ensures that the settings file is sent only to the specific relay that matches the serial number.
5. Click the **OK** button to create the .urs file in the Offline Window area.

To save settings in the IID format in EnerVista Online Window:

1. In EnerVista, connect to the device in the Online Window area.
2. Right-click the device name in the Online Window area and select **Read IID File**. The option is not present when the device does not have the IEC 61850 option. A window opens when successful.
3. Select or enter a file name and location, and click the **Receive** button. A .iid file is created.

To save settings in the IID format in EnerVista Offline Window:

1. In EnerVista, right-click the device in the Offline Window area.
2. Select the **Create IID File** option for firmware below 7.3. The option is not always available. Select the **Save As** option for firmware 7.3 and later, and select the IID option from drop-down list.

No file is generated. The IID file on the computer is copied to the location specified.

3. If the **Do not update IID file when updating SCL files** preference is enabled under **File > Preferences > IEC 61850**, then a message displays to that effect. This means that there is no IID file available on the computer to be copied, so a new one is generated.

To save settings in the IID format using TFTP:

1. On a computer on the same subnetwork as the UR device, open a command window.
2. Enter

```
TFTP <IP address> GET ur.iid <destination>
```

where

<IP address> is the IP address of the UR device
ur.iid is the internal name of the IID file in the UR device
<destination> is the path and file name of the IID file. If omitted, the file is saved as ur.iid in the command window default directory.

An example is

```
TFTP 192.168.1.101 GET ur.iid Feeder1.iid
```

To save settings in the ICD format in EnerVista Online Window:

1. In EnerVista, right-click the device in the Online Window area.
2. Select the **Read ICD File** option. A window opens.
3. Enter a path/name for the file, and click the **Save** button.

To save settings in the ICD format in EnerVista Offline Window:

1. In EnerVista, right-click the device in the Offline Window area.
2. Select the **Create ICD File** option. Or select the **Save As** option, and select the ICD option from drop-down list.

   You can be prompted to specify if the file is for firmware version 7.12 or later.

   The file is saved to the location specified.

To save settings in the CID format in EnerVista Online Window:

1. In EnerVista, right-click the device in the Online Window area.
2. Select the **Read ICD File** option. A window opens.
3. Enter a path/name for the file, and click the **Save** button.

To save settings in the CID format in EnerVista Offline Window:

1. In EnerVista, right-click the device in the Offline Window area.
2. Select the **Save As** option, which displays for firmware 7.3 and later, and select the CID option from the drop-down list.

   The file is copied from the computer to the location specified.

To save list of sites and devices with an Environment backup:

1. In EnerVista, click **File > Environment > Backup**. A window opens.
2. Name and save the .ENV file.

9.8.2 Restore settings

UR device settings can be restored to the values they were at when a URS backup file was created using the EnerVista UR Setup software. When the IEC 61850 option is present, the settings can alternatively be to the values they were at when an IID type backup was created either using the EnerVista UR Setup software in online mode or by using any of the supported file transfer protocols. Note that TFTP cannot be used here, as TFTP "put" mode is disabled for security reasons.

To restore completely, a few settings need to be entered manually either via EnerVista UR Setup or via the UR device front panel. If the restore operation is to be via Ethernet, first the UR device must have its IP address settings entered via the front panel. These are located at **SETTINGS ⇨ PRODUCT SETUP ⇨⇩ COMMUNICATIONS ⇨⇩ NETWORK 1(3)** and **SETTINGS ⇨ PRODUCT SETUP ⇨⇩ COMMUNICATIONS ⇨⇩ IPv4 ROUTE TABLE 1(6) ⇨ DEFAULT IPv4 ROUTE ⇨ GATEWAY ADDRESS**.

When importing a file, it cannot have a blank numeric value. All numeric values must be non-blank, otherwise the file is rejected.

URS and IID procedures are outlined here.

To restore settings from a URS file:

1. In EnerVista, connect to the device in the Online Window area.
2. Right-click the .urs file in the Offline Window area and select **Add Device from File** to locate a file, and/or drag-and-drop the file from the Offline Window area to the device in the Online Window area.

Figure 9-11: Restoring a URS settings file

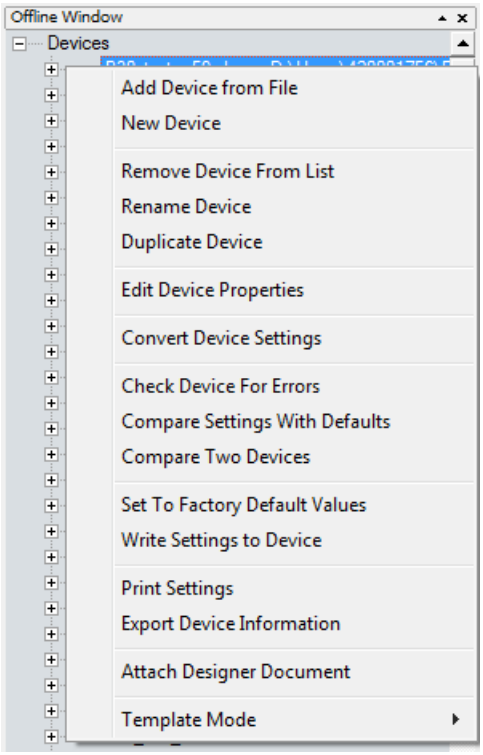

3. Two prompts are possible, first that the URS file does not include the complete IEC 61850 configuration and that it needs to be recreated if you continue. This means that the URS file is from UR version 7.30 or higher, has the IEC 61850 software option in the order code, but any IEC 61850 content will be compromised and will need to be configured.

   Second, a message can display that the URS file is part of a device folder and to use the device's CID file. This means that the URS file is from UR version 7.3 or higher, has the IEC 61850 software option in the order code, and is part of the device folder. The user is trying to add a URS file from inside a device's folder. Instead, the user needs to use the CID file from the device folder.

   These messages display because the roles of the protection engineer and network engineer can be separate. The former can require a URS file, while the latter can require stored Modbus settings and protection schemes.

4. Manually copy the remaining settings, outlined as follows.

To restore settings from an IID file using EnerVista software:

1. In Windows, make a copy of the .iid backup file, and change the extension to .cid on the new copy.
2. In the Online Window area of the UR EnerVista Setup software, connect to the device to establish communication.
3. In the Offline Window area, right-click **Devices** and select **Import Devices from SCD**.

Figure 9-12: Importing an SCD or CID file

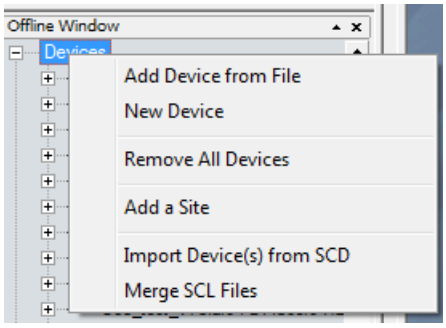

4. Navigate to and select the file with .cid extension. When prompted, enter a file name to give to an intermediate URS file. The URS file is added to the Offline Window area.
5. Drag the imported file in the Offline Window to the device in the Online Window. Note that the **RELAY SETTINGS** value also is written to a device, and the accepting relay is put into "Programmed" or "Not Programmed" mode as configured in the offline file.
6. Manually copy the remaining settings, outlined as follows.

To restore settings from an IID using SFTP:

1. Verify that transfer by SFTP is enabled under **SETTINGS ⇨ PRODUCT SETUP ⇨⇩ COMMUNICATIONS ⇨⇩ PROTOCOL⇨⇩ SFTP PROTOCOL**.
2. Close EnerVista UR Setup software.
3. In Windows, make a copy of the .iid backup file, and change the extension to .cid on the new copy.
4. On a computer on the same subnetwork as the UR device, open an SFTP client application, such as WinSCP. Note that TFTP cannot be used here.
5. Use the device's IP address as the host name.
6. If the device has the CyberSentry option, use the User Name of "Administrator" or "Engineer," and the password programmed for the selected role. The default password is "ChangeMe1#" (without quotation marks). Log in to the device.
7. If the device does not have the CyberSentry option, use the User Name of "Setting," and the password programmed for the Setting role. The default password is "ChangeMe1#" (without quotation marks). Log in to the device.
8. Upload the backup file copy with the .cid extension. WinSCP uses drag-and-drop or copy-and-paste for this file transfer.
9. Manually copy the remaining settings, outlined as follows.

To manually copy remaining settings:

1. Settings listed in section 4.1.2 Settings Files are not transferred to the UR device with settings files. Enter them manually either via the front panel or via EnerVista UR Setup software. The values that these settings had at the time the backup was created are contained within the backup file, accessed through EnerVista UR Setup software.

To restore the list of sites and devices from an Environment backup:

1. In EnerVista, click **File > Environment > Restore**. A window opens.
2. Select the .ENV file to restore.

9.9 Upgrade software

In general, the latest releases of the EnerVista software can be used with all firmware versions. For example, EnerVista software released for UR 8.2 can be used to access multiple UR devices that have version 8.2x, 7.4x, and 6.0x firmware installed.

Existing installations do not need to be uninstalled before upgrade.

You can also downgrade the software; use the same procedure.

Silent installation also is possible.

When upgrading on a computer with Windows Server 2012, its Release 2 needs the KB2919355 update first. Follow the instructions described in the link, which works in Internet Explorer, not Chrome.

https://www.microsoft.com/en-US/download/details.aspx?id=42334

To upgrade the EnerVista software:

1. If a beta version of the EnerVista UR Setup software is installed, uninstall it, for example using the Windows Control Panel.
2. For Windows 10, disconnect any USB cable to the N60, else the UR USB drivers do no install correctly.
3. Download the latest EnerVista software and/or firmware from http://www.gegridsolutions.com/app/ViewFiles.aspx?prod=urfamily&type=7
4. Double-click the file and complete the wizard. The software installs.
5. Access the software.

   The prompt "Do you want to create device folders for all your pre-existing off line devices" determines the folder structure on the computer. Clicking **Yes** means that CID, ICD, and URS files are to be grouped together in a folder, and the URS file is also one level above. Clicking **No** leaves folder structure unchanged.
6. Check the version number under **Help > About**. If the new version does not display, try uninstalling the software and reinstalling the new version.
7. For Windows 10, to finish installing the UR USB driver, open **Device Manager > Ports**, then plug in the USB cable (to connect the relay and computer). A new port starting with "GE Virtual Serial Port" is available. If available, click the **OK** button to complete the installation.

   If not available, uninstall the existing GE USB driver in the **Device Manager > Ports**. (Right-click and "Uninstall.")

   When complete, unplug and re-plug the USB cable connecting the UR device. The "GE Virtual Serial Port" driver is now available.

A message can display about a version not being supported. An example is when upgrading from version 7.12K to 7.4x. The 7.12K entry is removed from the Offline Window area.

A message can display in the EnerVista software upon launch that "a device from the environment was not recognized." This means that a device is online and its firmware version conflicts with the software version. In the example shown, a C60 with firmware version 7.5x is online, but the software version is 7.3x. Updating removed incompatible files and changed the device to version 7.3x, after which you need to make the order codes consistent as outlined next.

Figure 9-13: Mismatch in order code between software and device

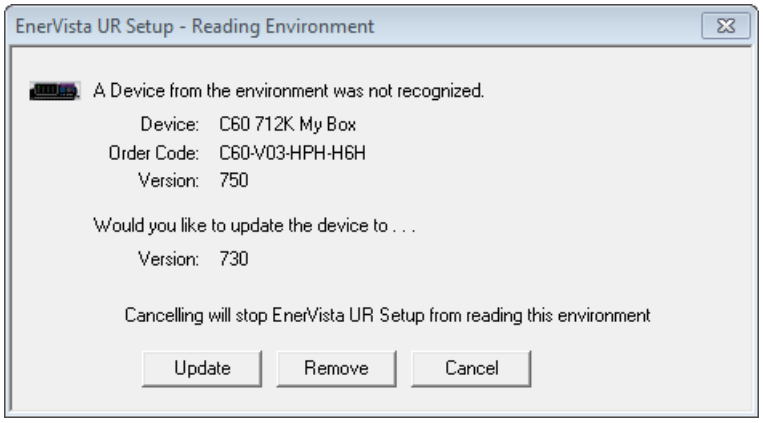

To make the order codes consistent:

1. In EnerVista, click the **Device Setup** button. The window opens.
2. Expand the entry for the UR device.
3. Click the **Read Order Code** button. The order code and version of the device are populated to the software.
4. Click the **OK** button to save the change.

The silent installation is not truly silent because it invokes the user interface. The installation is silent at step 5. Double-clicking on the .exe file for installation is faster.

To install the software silently:

1. Uninstall any existing EnerVista UR Setup software.
2. In a command line window, run the executable file, such as entering URPC810.exe -r
3. Follow the prompts to install the software using the wizard. The action creates a setup.iss file in the C:\WINNT, C:\Windows\Setup, or other folder that records user inputs.
4. Copy the .exe and .iss files to the same folder.
5. In a command line window, enter URPC810.exe /s, where URPC810.exe is the executable file name. The software installs and generates a setup.log file in the same folder. A result code of "0" at the end the log file means that the installation succeeded.

9.10 Upgrade firmware

If upgrading both firmware and EnerVista software, upgrade the software first.

The firmware of the N60 device can be upgraded locally or remotely, using the EnerVista software.

Upgrades are possible for the same release (such as 8.01 to 8.02) and from one firmware version to another (such as 7.2 to 7.3). When upgrading to another firmware version, check the release notes on the GE Multilin website for compatibility.

If you are upgrading from version 7.0 or 7.1 to 7.2 or later, some CPU modules require a new boot version. Update this first.

Address any equipment mismatch error before upgrade. For example, if you have a basic front panel attached and the order code in the device is for a graphical front panel, the upgrade only works with a graphical front panel.

You can also downgrade firmware; use the same procedure.

Upgrading the firmware takes the relay out of service. At the end of the upgrade, the relay restores the “In Service” state that existed before the upgrade.

Any DSP manufactured between 1 January 2013 and 1 December 2015 with versions 7.27, 7.28, or 7.60 and up must be sent back to the factory for updates before updating the firmware.

To upgrade the firmware using EnerVista software:

1. If required, download the bootcode file and/or firmware from http://www.gegridsolutions.com/app/ViewFiles.aspx?prod=urfamily&type=7
   The firmware is a .SFD file. The boot file is a .000 file. Bootcode files 7.03 and later are for CPUs T, U, V, or W, which have 9T, 9U, 9V, or 9W on the label.
2. For a relay without the CyberSentry software option, navigate to **Settings > Product Setup > Security** and ensure that the **Remote Setting Authorized** and **Local Setting Authorized** settings are "ON". On the front panel of the device, the path is **SETTINGS ⇨ PRODUCT SETUP ⇨ SECURITY ⇨⇩ DUAL PERMISSION SECURITY ACCESS**.
3. For a relay with CyberSentry Lvl 1 software option, navigate to **Settings > Product Setup > Security > Access Supervision** or **Settings > Product Setup > Security > Supervisory** and disable the **Lock Firmware** setting. To change this setting, the Supervisor role is required, or the Administrator role if the Supervisor role is not used.
4. In EnerVista, back up the device settings by right-clicking the device and selecting **Add Device to Offline Window**. In the window that displays, select an existing file to overwrite, or enter a name for a new settings file and optionally a location for the new file. Click the **Receive** button to start the backup.

   If an "Incompatible device order codes or versions" message displays, it means that you are trying to overwrite a file for another product. You access the **Convert Device Settings** option by right-clicking the file in the **Offline Window** area at the lower left. GE recommends converting settings in firmware steps, for example when converting from 6.0 to 7.4x, convert first to 7.0 then 7.4 in order to follow embedded conversion rules and keep settings. Note that the values of all settings that have been defaulted during conversion are not listed in the conversion report; to find the value of a setting before conversion, inspect the device backups made before conversion.
5. In EnerVista, navigate to **Maintenance > Update Firmware**.

   First select the boot file, if applicable, locating the .000 file, and proceed with the update. Note that settings are not lost during this update. When done, the relay restarts automatically; continue with the next step.

NOTICE When updating the boot file, ensure that power is not lost, else the relay must be returned to the factory for repair.

   To update the firmware, select the firmware update by locating the .SFD file, and proceed with the update.

   EnerVista software only enables users to upgrade the firmware in the relay after validating the source of the SFD file and its authenticity, by verifying the digital signature included in the file before sending it to the relay. If the digital signature validation fails, the firmware upgrade process is aborted. If the digital signature validation succeeds, EnerVista proceeds with the firmware upgrade. The relay records the outcome of the signature validation in the security events.

   When asked if upgrading over the Internet, the difference is the flash memory buffer size each time the software sends data to the relay. Yes means that the flash memory buffer size is 256 bytes. No means that it is 1024 bytes, which is faster.

   If a warning message displays about the firmware not being supported by the EnerVista software, it means that the firmware is a later version than the software. Upgrade the software to the same or later version as the firmware, then try again.

   If an "Unable to put relay in flash mode" message displays, set the **Settings > Product Setup > Security > Dual Permission Security Access > Remote Setting Authorized** and **Local Setting Authorized** settings to "ON" and try again.

   When the update is finished, the relay restarts automatically. The upgrade process takes about 20 minutes when using a graphical front panel because of writing to the front panel.
6. Restart the EnerVista software, and refresh the order code in EnerVista under the **Device Setup** button.
7. Verify the boot and firmware version while the device is starting up or in EnerVista under **Actual Values > Product Info > Firmware Revisions**. The **Revision** is the firmware version, for example, revision 8.20 is UR firmware release 8.20. The **Boot Program Revision** is the bootloader release.

Figure 9-14: Check upgrades

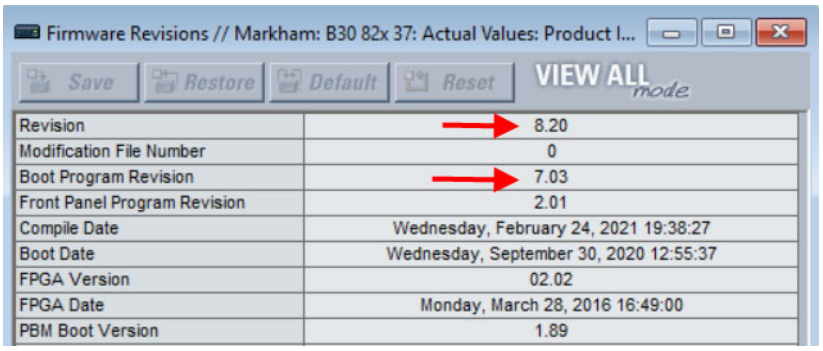

8. Set the device to "programmed" under **Settings > Product Setup > Installation**. A self-test error displays on the device until this is done.
9. If you changed the **Remote Setting Authorized**, the **Local Setting Authorized** settings, or relay lock settings, return them to their previous settings.
10. If you changed the **Lock Firmware** setting, enable it again.
11. To apply any previously saved settings, right-click the saved settings file in the **Offline Window** area and select **Write to Device**. Optionally convert the saved settings to the new firmware version before writing to the device by right-clicking and selecting **Convert Device Settings**.

NOTE

The field-programmable gate array (FPGA) can be upgraded under **Maintenance > Update FPGA** when the device is connected via serial cable and the firmware revision is 7.0 or higher.

Modbus addresses assigned to firmware modules, features, settings, and corresponding data items (that is, default values, minimum/maximum values, data type, and item size) can change slightly from version to version of firmware. The addresses are rearranged when new features are added or existing features are enhanced or modified. The EEPROM DATA ERROR message displayed after upgrading/downgrading the firmware is a resettable, self-test message intended to inform users that the Modbus addresses have changed with the upgraded firmware. This message does not signal any problems when appearing after firmware upgrades.

9.11 Replace module

This section outlines how to replace a module.

WARNING **Withdraw or insert a module only when control power has been removed from the unit, and be sure to insert only the correct module type into a slot, else personal injury, damage to the unit or connected equipment, or undesired operation can result.**

NOTICE To avoid damage to the equipment, use proper electrostatic discharge protection (for example, a static strap) when coming in contact with modules while the relay is energized.

The relay, being modular in design, allows for the withdrawal and insertion of modules. Replace modules only with like modules in their original factory configured slots.

Two procedures follow: replace a module with the same module, and upgrade a module.

To replace a module with the same module:

1. Open the enhanced front panel to the left once the thumb screw has been removed. This allows for easy access of the modules for withdrawal. The new wide-angle hinge assembly in the enhanced front panel opens completely and allows easy access to all modules in the N60.

Figure 9-15: Modules inside relay with front cover open (enhanced front panel)

842812A1.CDR

The basic front panel can be opened to the left once the black plastic sliding latch on the right side has been pushed up, as shown below.

Figure 9-16: Removing module (basic front panel)

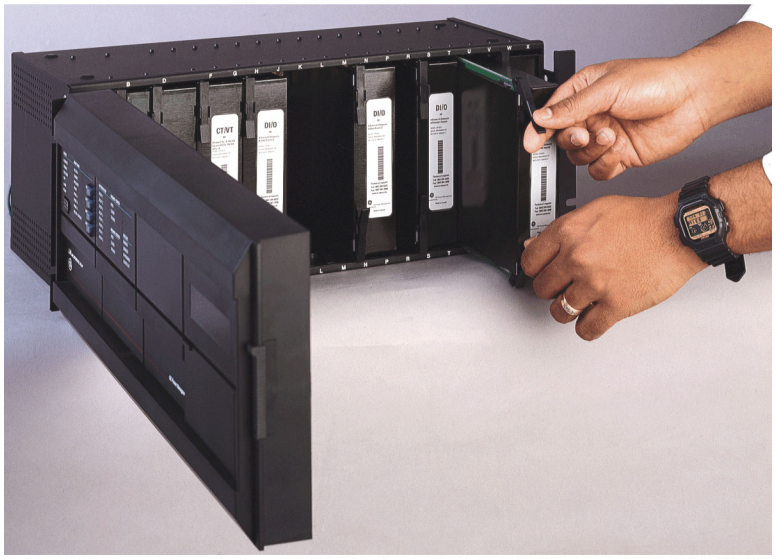

842760A1.CDR

2. With power to the unit off, disconnect individually the connections at the front and back of the module before removing the module from the chassis.

   For any Process Bus Module in slot H for use with a HardFiber Brick, also remove the two screws at the back that attach the module to the chassis.

3. To properly remove a module, pull simultaneously the ejector/inserter clips, located at the top and bottom of the module. Record the original location of the module to ensure that the same or replacement module is inserted into the correct slot. While modules with current input provide automatic shorting of external CT circuits, for CT/VT modules it is recommended to short/isolate external circuits accordingly for maximum safety.

4. To properly insert a module, ensure that the correct module type is inserted into the correct slot position. The ejector/inserter clips located at the top and at the bottom of each module must be in the disengaged position as the module is smoothly inserted into the slot. Once the clips have cleared the raised edge of the chassis, engage the clips simultaneously. When the clips have locked into position, the module is fully inserted.

NOTE

When adding a module (versus replacing a module), check that settings have not changed. Depending on the module, settings can reset to default values.

NOTE The new CT/VT modules can only be used with new CPUs; similarly, old CT/VT modules can only be used with old CPUs. In the event that there is a mismatch between the CPU and CT/VT module, the relay does not function and a DSP ERROR or HARDWARE MISMATCH error displays.

An upgrade example is replacing the CPU module with a more recent one, such as swapping 9G/9H/9N with 9T/9U/9V/9W. A power supply module upgrade does not affect an order code.

To upgrade a module:

1. Back up settings by sending the device to the Offline Window area. Convert the settings to the new order code by right-clicking in the Offline Window area. Replace the module as outlined in the previous procedure. In the Online Window area, reset all settings to factory defaults and read the new order code from the device using **Commands > Relay Maintenance > Update Order Code**. Send the saved settings from the Offline Window area to the online device. Refresh the order code in the **Device Setup** window and set the device to "Programmed" under **Settings > Product Setup > Installation**.

9.12 Battery

For the SH and SL models and earlier, a battery provides backup power for the real-time clock. The TH model does not contain a battery, it uses a supercapacitor to provide backup power for the relay's real time clock.

For the SH and SL models, the battery can be replaced when required. The battery type is 3 V cylindrical. For the TH model, no maintenance is required.

Note: The power supply modules were upgraded in 2014 from RH/RL to SH/SL. However, the order code when purchasing a UR with redundant power supply remained as RH/RL so that customers can continue to use the same order codes. The order code can read RH or RL, while the module inside the unit reads SH, SL or TH. The order code remains RH for power supplies RH/SH/TH and RL for power supplies RL/SL.

This does not apply to replacement modules. The order code for replacement redundant power supply modules is SH, SL or TH

9.12.1 Replace battery

When required, the battery can be replaced. The power supply module contains the battery.

⚠CAUTION **To avoid injury, ensure that the unit has been powered off for a minimum of three minutes before replacing the battery.**

Risk of fire if battery is replaced with incorrect type or polarity.

1. Turn off the power to the unit.
2. Wait a minimum of three minutes to ensure that there is no power to the battery.
3. As outlined in the previous section, open the unit by sliding up the plastic latch on the right side of the front panel (basic front panel) or unscrewing the panel (enhanced front panel).
4. For the basic front panel, it needs to be removed in order to access the power supply module, which is typically in the first slot on the left side and blocked by the hinge of the front panel. To remove the front panel, unscrew the bracket on the left side of the unit.
5. Remove the power supply module by simultaneously pulling the ejector clips at the top and bottom of the module and sliding it out.
6. Unscrew all four screws (not three) that attach the metal cover to the module. The fourth screw is at the back end of the module, on the opposite side from the clips, beside the white electronics part (see figure).
7. Slide the metal cover away from the clips about 0.5 cm (1/8 inch) and remove the cover.
8. Unclip the black plastic holder that keeps the battery in place. The plastic clips into the socket at the bottom on both sides—pull the plastic away from the battery. Use a flat-head screwdriver if you cannot unclip the plastic with your fingers.

9. Replace the battery with the identical make and model. For example, do not use a rechargeable battery. Observe the + and - polarity of the battery and replace it with the same polarity as marked on the battery holder.

Figure 9-17: Battery location on power supply module

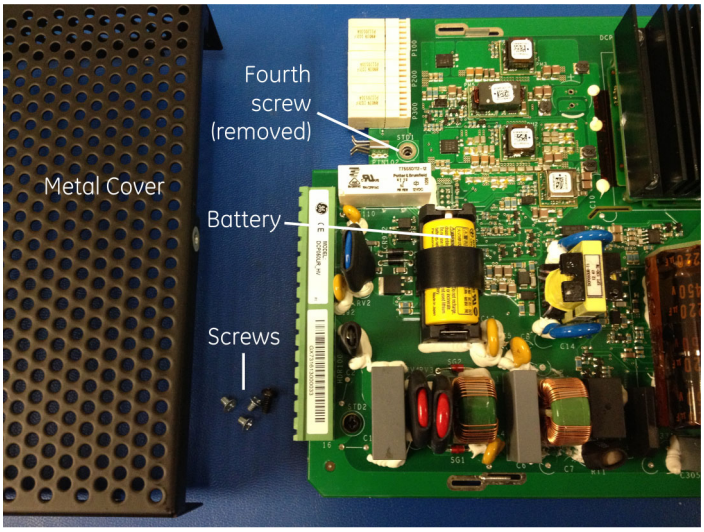

859717A1.cdr

10. Reinstall the battery holder and the metal cover, and reinsert the power supply module into the unit.
11. Power on the unit.
12. Dispose of the old battery as outlined in the next section.

9.12.2 Dispose of battery

9.12.2.1 EN Battery disposal

This product contains a battery that cannot be disposed of as unsorted municipal waste in the European Union. See the product documentation for specific battery information. The battery is marked with this symbol, which may include lettering to indicate cadmium (Cd), lead (Pb), or mercury (Hg). For proper recycling return the battery to your supplier or to a designated collection point. For more information see: www.recyclethis.info.

9.12.2.2 CS Nakládání s bateriemi

Tento produkt obsahuje baterie, které nemohou být zneškodněny v Evropské unii jako netříděný komunální odpadu. Viz dokumentace k produktu pro informace pro konkrétní baterie. Baterie je označena tímto symbolem, který může zahrnovat i uvedena písmena, kadmium (Cd), olovo (Pb), nebo rtuť (Hg). Pro správnou recyklaci baterií vraťte svémudodavateli nebo na určeném sběrném místě. Pro více informací viz: www.recyclethis.info.

9.12.2.3 DA Batteri affald

Dette produkt indeholder et batteri som ikke kan bortskaffes sammen med almindeligt husholdningsaffald i Europa. Se produktinformation for specifikke informationer om batteriet. Batteriet er forsynet med indgraveret symboler for hvad batteriet indeholder: kadmium (Cd), bly (Pb) og kviksølv (Hg). Europæiske brugere af elektrisk udstyr skal aflevere kasserede produkter til genbrug eller til leverandøren. Yderligere oplysninger findes på webstedet www.recyclethis.info.

9.12.2.4 DE Entsorgung von Batterien

Dieses Produkt beinhaltet eine Batterie, die nicht als unsortierter städtischer Abfall in der europäischen Union entsorgt werden darf. Beachten Sie die spezifischen Batterie-informationen in der Produktdokumentation. Die Batterie ist mit diesem Symbol gekennzeichnet, welches auch Hinweise auf möglicherweise enthaltene Stoffe wie Kadmium (Cd), Blei (Pb) oder Quecksilber (Hektogramm) darstellt. Für die korrekte Wiederverwertung bringen Sie diese Batterie zu Ihrem lokalen Lieferanten zurück oder entsorgen Sie das Produkt an den gekennzeichneten Sammelstellen. Weitere Informationen hierzu finden Sie auf der folgenden Website: www.recyclethis.info.

9.12.2.5 EL Απόρριψη μπαταριών

Αυτό το προϊόν περιέχει μια μπαταρία που δεν πρέπει να απορρίπτεται σε δημόσια συστήματα απόρριψης στην Ευρωπαϊκή Κοινότητα. Δείτε την τεκμηρίωση του προϊόντος για συγκεκριμένες πληροφορίες που αφορούν τη μπαταρία. Η μπαταρία είναι φέρει σήμανση με αυτό το σύμβολο, το οποίο μπορεί να περιλαμβάνει γράμματα για να δηλώσουν το κάδμιο (Cd), τον μόλυβδο (Pb), ή τον υδράργυρο (Hg). Για την κατάλληλη ανακύκλωση επιστρέψτε την μπαταρία στον προμηθευτή σας ή σε καθορισμένο σημείο συλλογής. Για περισσότερες πληροφορίες δείτε: www.recyclethis.info.

9.12.2.6 ES Eliminacion de baterias

Este producto contiene una batería que no se pueda eliminar como basura normal sin clasificar en la Unión Europea. Examine la documentación del producto para la información específica de la batería. La batería se marca con este símbolo, que puede incluir siglas para indicar el cadmio (Cd), el plomo (Pb), o el mercurio (Hg). Para el reciclaje apropiado, devuelva este producto a su distribuidor ó deshágase de él en los puntos de reciclaje designados. Para mas información : wwwrecyclethis.info.

9.12.2.7 ET Patareide kõrvaldamine

Käesolev toode sisaldab patareisid, mida Euroopa Liidus ei tohi kõrvaldada sorteerimata olmejäätmetena. Andmeid patareide kohta vaadake toote dokumentatsioonist. Patareid on märgistatud käesoleva sümboliga, millel võib olla kaadmiumi (Cd), pliid (Pb) või elavhõbedat (Hg) tähistavad tähed. Nõuetekohaseks ringlusse võtmiseks tagastage patarei tarnijale või kindlaksmääratud vastuvõtupunkti. Lisainformatsiooni saab Internetist aadressil: www.recyclethis.info.

9.12.2.8 FI Paristoje ja akkujen hävittäminen

Tuote sisältää pariston, jota ei saa hävittää Euroopan Unionin alueella talousjätteen mukana. Tarkista tuoteselosteesta tuotteen tiedot. Paristo on merkitty tällä symbolilla ja saattaa sisältää cadmiumia (Cd), lyijyä (Pb) tai elohopeaa (Hg). Oikean kierrätystavan varmistamiseksi palauta tuote paikalliselle jälleenmyyjälle tai palauta se paristojen keräyspisteeseen. Lisätietoja sivuilla www.recyclethis.info.

9.12.2.9 FR Élimination des piles

Ce produit contient une batterie qui ne peuvent être éliminés comme déchets municipaux non triés dans l'Union européenne. Voir la documentation du produit au niveau des renseignements sur la pile. La batterie est marqué de ce symbole, qui comprennent les indications cadmium (Cd), plomb (Pb), ou mercure (Hg). Pour le recyclage, retourner la batterie à votre fournisseur ou à un point de collecte. Pour plus d'informations, voir: www.recyclethis.info.

9.12.2.10 HU Akkumulátor hulladék kezelése

Ezen termék akkumulátort tartalmaz, amely az Európai Unión belül csak a kijelölt módon és helyen dobható ki. A terméken illetve a mellékelt ismertetőn olvasható a kadmium (Cd), ólom (Pb) vagy higany (Hg) tartalomra utaló betűjelzés. A hulladék akkumulátor leadható a termék forgalmazójánál új akkumulátor vásárlásakor, vagy a kijelölt elektronikai hulladékudvarokban. További információ a www.recyclethis.info oldalon.

9.12.2.11 IT Smaltimento batterie

Questo prodotto contiene una batteria che non può essere smaltita nei comuni contenitori per lo smaltimento rifiuti, nell' Unione Europea. Controllate la documentazione del prodotto per le informazioni specifiche sulla batteria. La batteria è contrassegnata con questo simbolo e può includere alcuni caratteri ad indicare la presenza di cadmio (Cd), piombo (Pb) oppure mercurio (Hg). Per il corretto smaltimento, potete restituirli al vostro fornitore locale, oppure rivolgervi e consegnarli presso i centri di raccolta preposti. Per maggiori informazioni vedere: ww.recyclethis.info.

9.12.2.12 LT Baterijų šalinimas

Šios įrangos sudėtyje yra baterijų, kurias draudžiama šalinti Europos Sąjungos viešose nerūšiuotų atliekų šalinimo sistemose. Informaciją apie baterijas galite rasti įrangos techninėje dokumentacijoje. Baterijos žymimos šiuo simboliu, papildomai gali būti nurodoma kad baterijų sudėtyje yra kadmio (Cd), švino (Pb) ar gyvsidabrio (Hg). Eksploatavimui nebetinkamas baterijas pristatykite į tam skirtas surinkimo vietas arba grąžinkite jas tiesioginiam tiekėjui, kad jos būtų tinkamai utilizuotos. Daugiau informacijos rasite šioje interneto svetainėje: www.recyclethis.info.

9.12.2.13 LV Bateriju likvidēšana

Šis produkts satur bateriju vai akumulatoru, kuru nedrīkst izmest Eiropas Savienībā esošajās sadzīves atkritumu sistēmās. Sk. produkta dokumentācijā, kur ir norādīta konkrēta informācija par bateriju vai akumulatoru. Baterijas vai akumulatora marķējumā ir šis simbols, kas var ietvert burtus, kuri norāda kadmiju (Cd), svinu (Pb) vai dzīvsudrabu (Hg). Pēc ekspluatācijas laika beigām baterijas vai akumulatori jānodod piegādātājam vai specializētā bateriju savākšanas vietā. Sīkāku informāciju var iegūt vietnē: www.recyclethis.info.

9.12.2.14 NL Verwijderen van baterijen

Dit product bevat een batterij welke niet kan verwijdert worden via de gemeentelijke huisvuilscheiding in de Europese Gemeenschap. Gelieve de product documentatie te controleren voor specifieke batterij informatie. De batterijen met deze label kunnen volgende indictaies bevatten cadium (Cd), lood (Pb) of kwik (Hg). Voor correcte vorm van kringloop, geef je de producten terug aan jou locale leverancier of geef het af aan een gespecialiseerde verzamelpunt. Meer informatie vindt u op de volgende website: www.recyclethis.info.

9.12.2.15 NO Retur av batteri

Dette produkt inneholder et batteri som ikke kan kastes med usortert kommunalt søppel i den Europeiske Unionen. Se produktdokumentasjonen for spesifikk batteriinformasjon. Batteriet er merket med dette symbolet som kan inkludere symboler for å indikere at kadmium (Cd), bly (Pb), eller kvikksølv (Hg) forekommer. Returner batteriet til leverandøren din eller til et dedikert oppsamlingspunkt for korrekt gjenvinning. For mer informasjon se: www.recyclethis.info.

9.12.2.16 PL Pozbywanie się zużytych baterii

Ten produkt zawiera baterie, które w Unii Europejskiej mogą być usuwane tylko jako posegregowane odpady komunalne. Dokładne informacje dotyczące użytych baterii znajdują się w dokumentacji produktu. Baterie oznaczone tym symbolem mogą zawierać dodatkowe oznaczenia literowe wskazujące na zawartość kadmu (Cd), ołowiu (Pb) lub rtęci (Hg). Dla zapewnienia właściwej utylizacji, należy zwrócić baterie do dostawcy albo do wyznaczonego punktu zbiórki. Więcej informacji można znaleźć na stronie internetowej www.recyclethis.info.

9.12.2.17 PT Eliminação de Baterias

Este produto contêm uma bateria que não pode ser considerado lixo municipal na União Europeia. Consulte a documentação do produto para obter informação específica da bateria. A bateria é identificada por meio de este símbolo, que pode incluir a rotulação para indicar o cádmio (Cd), chumbo (Pb), ou o mercúrio (hg). Para uma reciclagem apropriada envie a bateria para o seu fornecedor ou para um ponto de recolha designado. Para mais informação veja: www.recyclethis.info.

9.12.2.18 RU Утилизация батарей

Согласно европейской директиве об отходах электрического и электронного оборудования, продукты, содержащие батареи, нельзя утилизировать как обычные отходы на территории ЕС. Более подробную информацию вы найдете в документации к продукту. На этом символе могут присутствовать буквы, которые означают, что батарея содержит кадмий (Cd), свинец (Pb) или ртуть (Hg). Для надлежащей утилизации по окончании срока эксплуатации пользователь должен возвратить батареи локальному поставщику или сдать в специальный пункт приема. Подробности можно найти на веб-сайте: www.recyclethis.info.

9.12.2.19 SK Zaobchádzanie s batériami

Tento produkt obsahuje batériu, s ktorou sa v Európskej únii nesmie nakladať ako s netriedeným komunálnym odpadom. Dokumentácia k produktu obsahuje špecifické informácie o batérii. Batéria je označená týmto symbolom, ktorý môže obsahovať písmená na označenie kadmia (Cd), olova (Pb), alebo ortuti (Hg). Na správnu recykláciu vráťte batériu vášmu lokálnemu dodávateľovi alebo na určené zberné miesto. Pre viac informácii pozrite: www.recyclethis.info.

9.12.2.20 SL Odlaganje baterij

Ta izdelek vsebuje baterijo, ki je v Evropski uniji ni dovoljeno odstranjevati kot nesortiran komunalni odpadek. Za posebne informacije o bateriji glejte dokumentacijo izdelka. Baterija je označena s tem simbolom, ki lahko vključuje napise, ki označujejo kadmij (Cd), svinec (Pb) ali živo srebro (Hg). Za ustrezno recikliranje baterijo vrnite dobavitelju ali jo odstranite na določenem zbirališču. Za več informacij obiščite spletno stran: www.recyclethis.info.

9.12.2.21 SV Kassering av batteri

Denna produkt innehåller ett batteri som inte får kastas i allmänna sophanteringssytem inom den europeiska unionen. Se produktdokumentationen för specifik batteriinformation. Batteriet är märkt med denna symbol, vilket kan innebära att det innehåller kadmium (Cd), bly (Pb) eller kvicksilver (Hg). För korrekt återvinning skall batteriet returneras till leverantören eller till en därför avsedd deponering. För mer information, se: www.recyclethis.info.

9.12.2.22 TR Pil Geri Dönüşümü

Bu ürün Avrupa Birliği genel atık sistemlerine atılmaması gereken pil içermektedir. Daha detaylı pil bilgisi için ürünün kataloğunu inceleyiniz. Bu sembolle işaretlenmiş piller Kadmiyum(Cd), Kurşun(Pb) ya da Civa(Hg) içerebilir. Doğru geri dönüşüm için ürünü yerel tedarikçinize geri veriniz ya da özel işaretlenmiş toplama noktlarına atınız. Daha fazla bilgi için: www.recyclethis.info.

9.12.2.23 Global contacts

North America	905-294-6222
Latin America	+55 11 3614 1700
Europe, Middle East, Africa	+(34) 94 485 88 00
Asia	+86-21-2401-3208
India	+91 80 41314617

From GE Part Number 1604-0021-A1, GE Publication Number GEK-113574.

9.13 Clear files and data after uninstall

The unit can be decommissioned by turning off power to the unit and disconnecting the wires to it.

To clear files and settings in the UR:

1. On the UR front panel, navigate to **COMMANDS ⇨⇩ RELAY MAINTENANCE ⇨⇩ SERVICE COMMAND**, enter the value 20511, and press the **ENTER** key. The relay restarts and clears the UR.
2. Clear the flash memory using the **SETTINGS ⇨ PRODUCT SETUP ⇨⇩ CLEAR RELAY RECORDS** command.

To clear files and settings on the computer:

1. Uninstall the EnerVista UR Setup software.
2. Find and delete the following UR files:
   - .URS, .CID, and .ICD settings
   - .EVT event records
   - .CFG and .DAT COMTRADE

9.14 Repairs

The battery and modules inside the case can be replaced without return of the device to the factory. The firmware and software can be upgraded without return of the device to the factory.

Fuses in the power supply module are not field-replaceable.

Files can be requested for use by technical support staff, for example the Service Report or under **Maintenance > Retrieve File**, as outlined elsewhere in this document.

For issues not solved by troubleshooting, the process to return the device to the factory for repair is as follows:

- Contact a GE Grid Solutions Technical Support Center. Contact information is found in the first chapter.
- Obtain a Return Materials Authorization (RMA) number from the Technical Support Center.
- Verify that the RMA and Commercial Invoice received have the correct information.
- Tightly pack the unit in a box with bubble wrap, foam material, or styrofoam inserts or packaging peanuts to cushion the item(s). You may also use double boxing whereby you place the box in a larger box that contains at least 5 cm of cushioning material.
- Ship the unit by courier or freight forwarder, along with the Commercial Invoice and RMA, to the factory.

  GE GRID SOLUTIONS
  650 MARKLAND STREET
  MARKHAM, ONTARIO
  CANADA L6C 0M1
  ATTN: SERVICE DEPT.
  RMA# : _____

  Customers are responsible for shipping costs to the factory, regardless of whether the unit is under warranty.
- Fax a copy of the shipping information to the GE Grid Solutions service department in Canada at +1 905 927 5098.

Use the detailed return procedure outlined at

https://www.gegridsolutions.com/multilin/support/ret_proc.htm

The current warranty and return information are outlined at

https://www.gegridsolutions.com/multilin/warranty.htm

9

9.15 Storage

Store the unit indoors in a cool, dry place. If possible, store in the original packaging. Follow the storage temperature range outlined in the Specifications.

NOTICE To avoid deterioration of electrolytic capacitors, power up units that are stored in a de-energized state once per year, for one hour continuously.

9.16 Disposal

Other than the battery, there are no special requirements for disposal of the unit at the end its service life. For customers located in the European Union, dispose of the battery as outlined earlier. To prevent non-intended use of the unit, remove the modules as outlined earlier, dismantle the unit, and recycle the metal when possible. See the UR Family Recycling and Disposal Instructions (GET-20096).

N60 Network Stability and Synchrophasor Measurement System

Appendix A: FlexAnalog operands

This appendix outlines FlexAnalog parameters.

A.1 FlexAnalog items

A FlexAnalog parameter is an analog parameter.

FlexAnalog items specific to your device are viewable in a web browser. Enter the IP address of the UR, access the **Device Information Menu** option, then the **FlexAnalog Parameter Listing** option. Entries displayed online depend on order code.

Each FlexAnalog address is the Modbus memory map address prefixed with 0004. For example, with Modbus address of 1638, the FlexAnalog address is 00041638.

A.1.1 N60 FlexAnalog data items

Please note that this manual must be opened with Adobe Acrobat Reader to allow access to the attached spreadsheet. This program is freely available on the Adobe website. The spreadsheets may be opened using free web-based software such as Google Sheets.

An *Open File* dialogue box may open with a warning message about potential harm from programs, macros or viruses. The files supplied do not contain any harmful content, and may be safely opened.

Click on the button below to open the N60 FlexAnalog data items spreadsheet for version 8.5x.

FlexAnalog N60 850

N60 Network Stability and Synchrophasor Measurement System

Appendix B: RADIUS server configuration

This appendix outlines how to set up a RADIUS server for user authentication.

B.1 RADIUS server configuration

The following procedure is an example of how to set up a simple RADIUS server. You install the RADIUS server software on a separate computer. In this example, we use FreeRADIUS third-party software.

1. Download and install FreeRADIUS from www.freeradius.org as the RADIUS server. This is a Windows 32-bit installation that is known to work. If you try another third-party tool and it does not work, use the FreeRADIUS software.
2. Open the radiusd.conf file in the <Path_to_Radius>\etc\raddb folder, locate the "bind_address" field, and enter your RADIUS server IP address. An example is

   ```
   bind_address = 10.14.61.122
   ```

   Text editor software that supports direct editing and saving of UNIX text encodings and line breaks, such as EditPad Lite, is needed for this editing.
3. In the users.conf file in the <Path_to_Radius>\etc\raddb folder, add the following text to configure a user "Tester" with an Administrator role.

   ```
   Tester              User-Password == "TesterPw1#"
                       GE-UR-Role = Administrator
   ```
4. In the clients.conf file in the <Path_to_Radius>\etc\raddb folder, add the following text to define the UR as a RADIUS client, where in this example the client IP address is 10.14.61.132, the shared secret specified here is also configured on the UR device for successful authentication, and the shortname is a short, optional alias that can be used in place of the IP address.

   ```
   client 10.14.61.132 {
   secret = Testing!123
   shortname = ur1-test
   }
   ```

   Alternatively, you may specify one secret for a network of clients, where in the example below the clients are all within the 10.14.61.0/24 subnet and the shared secret specified here is also configured on all the UR devices in the subnet for successful authentication.

   ```
   client 10.14.61.0/24 {
   secret = Testing!123
   shortname = net1-test
   }
   ```
5. In the <Path_to_Radius>\etc\raddb folder, create a file called dictionary.ge and add the following content.

B

```
# ##########################################################
#  GE VSAs
##########################################################

VENDOR                          GE              2910

# Management authorization
BEGIN-VENDOR                    GE

# Role ID
ATTRIBUTE                       GE-UR-Role      1           integer

# GE-UR-ROLE values
VALUE GE-UR-Role                Administrator   1
VALUE GE-UR-Role                Supervisor      2
VALUE GE-UR-Role                Engineer        3
VALUE GE-UR-Role                Operator        4
VALUE GE-UR-Role                Observer        5

END-VENDOR                      GE
##############################################################
```

6. In the dictionary file in the <Path_to_Radius>\etc\raddb folder, add the following line.

   ```
   $INCLUDE dictionary.ge
   ```

   For example, the file can look like the following:

   ```
   $INCLUDE ../share/freeradius/dictionary
   $INCLUDE dictionary.ge
   ```

7. For the first start, run the RADIUS server in debug mode to ensure that there are no compiling errors.

   ```
   <Path_to_Radius>/start_radiusd_debug.bat
   ```

8. Set up the RADIUS parameters on the UR as follows.
   8.1. If logging in, select **Device** for the **Authentication Type**, and use Administrator for the **User Name**. The default password is "ChangeMe1#".
   8.2. Access **Settings > Product Setup > Security**. Configure the IP address (10.14.61.122 in this example) and ports (default values in this example) for the RADIUS server. Leave the GE vendor ID field at the default of 2910. Update the RADIUS shared secret (Testing!123 in this example) as specified in the clients.conf file. Restart the relay for the IP address and port changes to take effect.
9. Verify operation. Log in to the UR software as follows. In the login window, select **Server** as the **Authentication Type**, enter the user name entered (for example user name Tester and password "TesterPw1#"). Check that the RADIUS server log file shows the access with an "Access-Accept" entry.

N60 Network Stability and Synchrophasor Measurement System

Appendix C: Command line interface

This appendix outlines command line access to the software.

C.1 Command line interface

SetupCLI is a command line interface to communicate with the EnerVista UR Setup software. Commands can be sent from a DOS prompt or a Windows batch file.

The interface is installed with the EnerVista software. Its default location is similar to C:\Program Files\EnerVista\Tools\SetupCLI

The EnerVista software needs to be installed on a computer to run the command line interface. The command line interface does not provide a remote connection to a computer running the EnerVista software.

Items to note are as follows:

- Works with EnerVista UR Setup version 6.10 and later
- Available in English only
- The graphical user interface of the software is not available concurrently with the command line interface
- It does not support concurrent commands
- It has limited functionality with CyberSentry
- It does not interface with UR Engineer
- It does not work when EnerVista UR Setup security is enabled, meaning when login is required

Command syntax is as follows:

- Options enclosed in [ ] are optional
- Values enclosed in < > are replaced with your own values
- <Application> is replaced with the EnerVista software to receive the command. Use "URPC" for EnerVista UR Setup.
- <device> is the UR device name, as displayed in the **Device Name** field of the Device Setup window and listed in the Online Window. Use quotes with spaces, such as "B30 Belfort".
- "-s" can be used with any command to suppress error messages
- All commands, their return codes, and error description are logged in the file C:\ProgramData\EnerVista\Tools\SetupCLI\SetupCLI.log
- When the Supervisor account is enabled, the **LOCK SETTINGS** setting must be disabled (default) before the putsettings, inservice, or reboot command can be used. This setting cannot be changed using the command line interface.
- Use quotes ("") to enclose any parameter containing a space

- Commands, options, and parameters are case sensitive
- All commands have a return code of 0-255. 0 indicates success and 1-255 indicate different errors
- If SetupCLI is automated (in a batch file), make sure that only a single batch is running at a time. SetupCLI does not support concurrent operations.

To run the command line interface:

1. In Windows, click the **Start** button, enter **cmd**, and press the **Enter** key. After prompting for permission, the Windows command window opens.
2. Enter `SetupCLI` followed by the action to execute. An example of use is to enter "SetupCLI -h" to display help, specifically the commands and explanations outlined here.

C

Figure C-1: Command line interface run in the command window

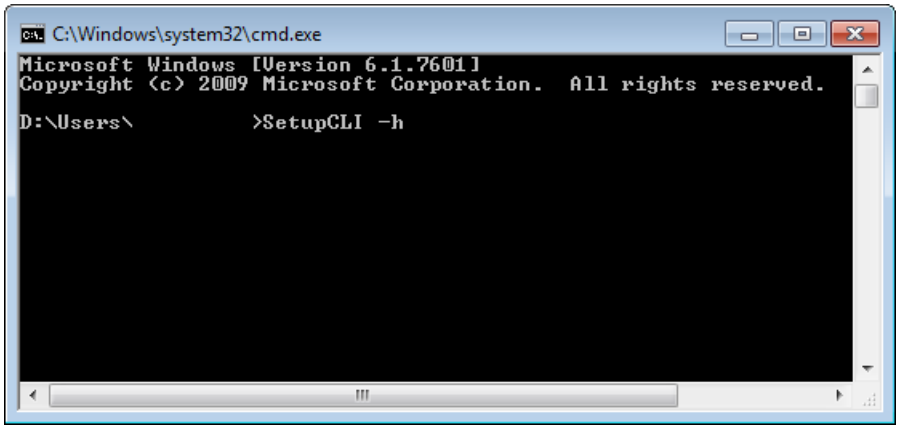

SetupCLI -h

Display help.

It displays the content outline here.

SetupCLI <Application> start [-c] [-s]

Launch application with name <Application>.

To start in client mode, which is the graphical user interface, include option '-c'. Before use, the software must be idle without any windows open. Any activity or open windows can cause unexpected behavior. When in client mode, do not use Launchpad's Site Management feature.

To suppress errors, include option -s.

Example: SetupCLI URPC start -c

SetupCLI <Application> exit [-s]

Exit application with name <Application>.

Example: SetupCLI URPC exit

SetupCLI <Application> login -d <device> [-A <authentication type>] [-a <account>] -w <password> [-s]

Authenticate with device <device> using password <password>.

For non-CyberSentry devices — Set <authentication type> to "traditional". Note that <authentication type> defaults to "traditional" if not specified. Set <account> to "COMMANDS" or "SETTINGS". If not specified, the SETTINGS account is used.

Example: SetupCLI URPC login -d "C30 Melbourne" -A traditional -a SETTINGS -w 1password1

Example of a batch file that checks for an error (this batch file uses standard batch file operations to check the return code (ERRORLEVEL) and jump to an error handler):

```
SetupCLI URPC start
SetupCLI URPC login -d demoDevice -a SETTINGS -w WrongPassword -A traditional
IF NOT ERRORLEVEL 0 GOTO FAILED
SetupCLI URPC putsettings -d demoDevice  -f "example file.urs"
SetupCLI URPC inservice -d demoDevice
SetupCLI URPC reboot -d demoDevice
SetupCLI URPC exit
exit

:FAILED
echo Please try again
exit
```

For CyberSentry devices with local authentication — Set <authentication type> to "local". Set <account> to "Supervisor", "Administrator", "Engineer", "Operator", or "Observer".

For CyberSentry devices with RADIUS authentication — Set <authentication type> to "radius". Set <account> to the user's account on the RADIUS server.

SetupCLI <Application> logout -d <device> [-s]

Log out of device <device>.

Example: SetupCLI URPC logout -d C30

SetupCLI <Application> getsettings -d <device> -f <File> [-s]

Read settings from device <device> and save them to the .urs file <File>. The <File> must not already exist. The default path to the output file is C:\Users\Public\Public Documents\GE Power Management\URPC\Data

Example: SetupCLI URPC getsettings -d C30 -f "C30 Markham.urs"

Example of a batch file to retrieve a settings file:

```
SetupCLI URPC start
SetupCLI URPC getsettings -d demoDevice -f C:\example.urs
SetupCLI URPC exit
```

Example of a batch file to retrieve a settings file from a relay that requires RADIUS authentication:

```
SetupCLI URPC start
SetupCLI URPC login -d demoDevice -a %1 -w %2 -A radius
SetupCLI URPC getsettings -d demoDevice -f "example file.urs"
SetupCLI URPC logout -d demoDevice
SetupCLI URPC exit
```

Although a user name and password could have been entered in this batch file, it would have created a security risk. Batch files allow you to pass in runtime parameters and refer to them in your script as %1, %2, and so on. For example, if this file is called example.bat, one calls it as follows: "example.bat MyUserName MyPassword"

SetupCLI <Application> putsettings -d <device> -f <File> [-s]

Write the settings file <File> to the device <device>.

For CyberSentry devices, putsettings is only supported for users with the "Administrator" role.

Example: SetupCLI URPC putsettings -d C30 -f "C30 Markham.urs"

C

SetupCLI <Application> compare -f <File1> -r <File2> -o <OutputFile> [-s]

Compare settings files <File1> and <File2>, and save output to <OutputFile>.

Example: SetupCLI URPC compare -f may.urs -r september.urs -o compared.txt

Batch file example that retrieves a settings file, compares it with an existing settings file, and opens the resulting comparison file:

```
SetupCLI URPC start
SetupCLI URPC getsettings -d demoDevice  -f devicefile.urs
SetupCLI URPC compare -f existingfile.urs -r devicefile.urs -o output.txt
```

The output is similar to the following:

```
Comparing settings file aaa.urs : C:\Users\Public\Public Documents\GE Power Management\URPC\Data\ with bbb.urs
: C:\Users\Public\Public Documents\GE Power Management\URPC\Data\

 #    Setting Name                (Group,Module,Item)   Value

 1 + Default Message Timeout          (1,1,1) = 299 s
 2 - Default Message Timeout          (1,1,1) = 300 s
 3 + Flash Message Time               (1,1,1) = 0.9 s
 4 - Flash Message Time               (1,1,1) = 1.0 s
```

SetupCLI <Application> inservice -d <device> [-n] [-s]

Put the device in service. Include option -n to take the device out of service.

Example: SetupCLI URPC inservice -d C30

SetupCLI <Application> reboot -d <device> [-s]

Reboot the relay <device>. This is necessary after changing IEC 61850 settings and aggregator source settings.

Example: SetupCLI URPC reboot -d "C30_Instanbul"

SetupCLI <Application> adddevice -I <IP Address> -S <Slave Address> -P <Modbus Port>

Connect to a device using its IP address, slave address, and Modbus port. Show the device in the EnerVista interface under the SetupCLI Site as DEV@SETUP_CLI.

EnerVista UR Setup 7.30 or higher supports this command.

Figure C-2: Device added using IP address

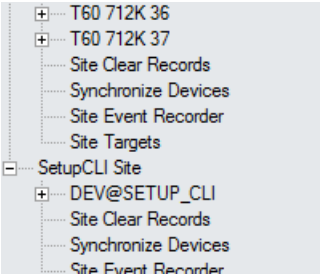

The device is named as DEV@SETUP_CLI, which is used as the device name required by the <device> parameter of other SetupCLI commands.

The device name DEV@SETUP_CLI is always assigned to the device that is connected most recently by performing 'adddevice' command. It means that the Application only keeps up to one device named as DEV@SETUP_CLI, the 'adddevice' command disconnects/deletes the device DEV@SETUP _CLI that was connected previously by performing 'adddevice' command.

The device name DEV@SETUP_CLI is never used to configure/connect to a device through the graphical user interface.

Example of a batch file using a device IP address to retrieve its settings file:

```
SetupCLI URPC start
SetupCLI URPC adddevice -I 192.168.140.113 -S 113 -P 502
SetupCLI URPC getsettings -d DEV@SETUP_CLI -f C:\example.urs
SetupCLI URPC exit
```

After connecting the device using IP address, the device name DEV@SETUP_CLI is used to identify this device in 'getsettings' command.

Example of a batch file using a device IP address to retrieve a settings file when RADIUS authentication is required:

```
SetupCLI URPC start
SetupCLI URPC adddevice -I 192.168.140.113 -S 113 -P 502
SetupCLI URPC login -d DEV@SETUP_CLI -a %1 -w %2 -A radius
SetupCLI URPC getsettings -d DEV@SETUP_CLI -f "example file.urs"
SetupCLI URPC logout -d DEV@SETUP_CLI
SetupCLI URPC exit
```

DEV@SETUP_CLI has to be used as the device name in the commands followed by the 'adddevice' command.

C

N60 Network Stability and Synchrophasor Measurement System

Appendix D: Miscellaneous

This chapter provides the warranty, revision history, and open source information.

D.1 Warranty

For products shipped as of 1 October 2013, GE Grid Solutions warrants most of its GE manufactured products for 10 years. For warranty details including any limitations and disclaimers, see the Terms and Conditions at

http://www.gegridsolutions.com/multilin/warranty.htm

For products shipped before 1 October 2013, the standard 24-month warranty applies.

D.2 Revision history

The tables outline the releases and revision history of this document.

Table D-1: Revision history (English)

Manual P/N	N60 revision	Release date	ECO
1601-0125-F1	3.4x	10 December 2003	URX-111
1601-0125-F2	3.4x	09 February 2004	URX-115
1601-0125-G1	4.0x	23 March 2004	URX-123
1601-0125-G2	4.0x	17 May 2004	URX-136
1601-0125-H1	4.2x	30 June 2004	URX-145
1601-0125-H2	4.2x	23 July 2004	URX-151
1601-0125-J1	4.4x	15 September 2004	URX-156
1601-0125-K1	4.6x	15 February 2005	URX-176
1601-0125-L1	4.8x	05 August 2005	URX-202
1601-0125-M1	4.9x	15 December 2005	URX-208
1601-0125-M2	4.9x	27 February 2006	URX-214
1601-0125-N1	5.0x	31 March 2006	URX-217
1601-0125-N2	5.0x	26 May 2006	URX-220
1601-0125-P1	5.2x	23 October 2006	URX-230
1601-0125-P2	5.2x	24 January 2007	URX-232

Manual P/N	N60 revision	Release date	ECO
1601-0125-R1	5.4x	26 June 2007	URX-242
1601-0125-R2	5.4x	31 August 2007	URX-246
1601-0125-R3	5.4x	17 October 2007	URX-251
1601-0125-S1	5.5x	07 December 2007	URX-253
1601-0125-S2	5.5x	08 February 2008	URX-258
1601-0125-S3	5.5x	12 March 2008	URX-260
1601-0125-T1	5.6x	27 June 2008	08-0390
1601-0125-U1	5.7x	30 April 2009	09-0938
1601-0125-U2	5.7x	30 September 2009	09-1165
1601-0125-V1	5.8x	29 May 2010	09-1457
1601-0125-V2	5.8x	04 January 2011	11-2237
1601-0125-W1	5.9x	12 January 2011	11-2227
1601-0125-X1	6.0x	21 December 2011	11-2840
1601-0125-X2	6.0x	5 April 2012	12-3254
1601-0125-Y1	7.0x	30 September 2012	12-3529
1601-0125-Y2	7.0x	11 November 2012	12-3601
1601-0125-Z1	7.1x	30 March 2013	13-0126
1601-0125-AA1	7.2x	1 August 2013	13-0401
1601-0125-AB1	7.3x	7 November 2014	14-1408
1601-0125-AB2	7.3x	1 September 2015	15-2215
1601-0125-AC1	7.40x	8 December 2016	16-3319
1601-0125-AE1	7.41x	31 January 2017	17-3427
1601-0125-AE3	7.4x	28 April 2017	17-3561
1601-0125-AF1	7.6x	30 June 2017	17-3779
1601-0125-AF2	7.6x	31 October 2017	17-3935
1601-0125-AG1	7.7x	31 March 2018	18-4430
1601-0125-AG2	7.7x	4 May 2018	18-4517
1601-0125-AH1	7.8x	17 December 2018	18-4703
1601-0125-AI1	7.9x	24 October 2019	19-5181
1601-0125-AJ1	8.0x	30 October 2019	19-5182
1601-0125-AJ2	8.0x	12 June 2020	20-5580
1601-0125-AK1	8.1x	20 November 2020	20-6096
1601-0125-AL1	8.2x	16 February 2021	21-6228
1601-0125-AL2	8.2x	23 July 2021	21-6482
1601-0125-AM1	8.3x	6 May 2022	22-6815
1601-0125-AM2	8.3x	14 October 2022	22-7224
1601-0125-AN1	8.4x	14 December 2022	22-7333
1601-0125-AN2	8.4x	28 June 2023	23-7692
1601-0125-AP1	8.5x	30 November 2023	23-7922

D.2.1 Major changes

For information on the updates included in this release of the N60 Network Stability and Synchrophasor Measurement System manual, please refer to the latest release notes for the UR N60 8.5x version online.

D.3 Open source licenses

The optional IEC 61850-9-2LE/IEC 61869 Process Bus Modules include open source code. See the UR-OpenSourceLicense folder installed at the root level with the software, such as at C:\Program Files (x86)\GE Power Management\URPC\

D

N60 Network Stability and Synchrophasor Measurement System

Abbreviations

A	Ampere
AC	Alternating Current
A/D	Analog to Digital
AE	Accidental Energization, Application Entity
AMP	Ampere
ANG	Angle
ANSI	American National Standards Institute
APDU	Application Protocol Data Unit
AR	Automatic Reclosure
ARP	Address Resolution Protocol
ASDU	Application-layer Service Data Unit
ASYM	Asymmetry
AUTO	Automatic
AUX	Auxiliary
AVG	Average
AWG	American Wire Gauge
BCD	Binary-Coded Decimal
BCS	Best Clock Selector
BER	Bit Error Rate
BF	Breaker Fail
BFI	Breaker Failure Initiate
BKR	Breaker
BLK	Block
BLKG	Blocking
BNC	Bayonet Neill-Concelman
BPNT	Breakpoint of a characteristic
BRKR	Breaker
CA	Certificate Authority
CAP	Capacitor
CC	Coupling Capacitor
CCVT	Coupling Capacitor Voltage Transformer
CFG	Configure / Configurable
.CFG	Filename extension for oscillography files
CHK	Check
CHNL	Channel
CID	Configured IED Description
CLS	Close
CLSD	Closed
CMND	Command
CMPRSN	Comparison
CO	Contact Output
COM	Communication
COMM	Communications
COMP	Compensated, Comparison
ConfRev	Configuration Revision
CONN	Connection
CONT	Continuous, Contact
CO-ORD	Coordination
CPU	Central Processing Unit
CRC	Cyclic Redundancy Code/Check
CRL	Certificate Revocation List
CRT, CRNT	Current
CSA	Canadian Standards Association
CT	Current Transformer
CVT	Capacitive Voltage Transformer
D/A	Digital to Analog
DA	Data Attribute
DANH	Doubly Attached Node with HSR
DANP	Doubly Attached Node with DANP
DC (dc)	Direct Current
DCE	Data Communications Equipment
DCS	Distributed Control System
DD	Disturbance Detector
DFLT	Default
DGNST	Diagnostics
DIFF	Differential
DIR	Directional
DISCREP	Discrepancy
DIST	Distance
DMD	Demand
DNP	Distributed Network Protocol
DPO	Dropout
DPS	Double-Point Status
DSP	Digital Signal Processor
DST	Daylight Savings Time
dt	Rate of Change
DTT	Direct Transfer Trip
DUTT	Direct Under-reaching Transfer Trip
EAD	Expert Arc Detector
EGD	Ethernet Global Data
ENCRMNT	Encroachment
EPRI	Electric Power Research Institute
.EVT	Filename extension for event recorder files
EXT	Extension, External
F	Field
FAIL	Failure
FCDA	Functional Constraint Data Attributes
FD	Fault Detector
FDH	Fault Detector high-set
FDL	Fault Detector low-set

FIR	Finite Impulse Response
FLA	Full Load Current
FO	Fiber Optic
FPGA	Field-programmable Gate Array
FREQ	Frequency
FSK	Frequency-Shift Keying
FTP	File Transfer Protocol
FxE	FlexElement™
FWD	Forward
G	Generator
GCM	Galois Counter Mode
GDOI	Group Domain of Interpretation
GE	General Electric
GFP	Graphical Front Panel
GIS	Gas Insulated Switchgear
GND	Ground
GNTR	Generator
GoCB	GOOSE Control Block
GOOSE	General Object Oriented Substation Event
GPS	Global Positioning System
GSU	Generator Step-Up
HARM	Harmonic / Harmonics
HCT	High Current Time
HGF	High-Impedance Ground Fault (CT)
HIZ	High-Impedance and Arcing Ground
HMI	Human-Machine Interface
HSR	High-availability Seamless Redundancy
HTTP	Hyper Text Transfer Protocol
HV	High Voltage
HYB	Hybrid
Hz	Hertz
I	Instantaneous
I_0	Zero Sequence current
I_1	Positive Sequence current
I_2	Negative Sequence current
IA	Phase A current
IAB	Phase A minus B current
IB	Phase B current
IBC	Phase B minus C current
IC	Phase C current
ICA	Phase C minus A current
ICD	IED Capability Description
ID	Identification
IED	Intelligent Electronic Device
IEC	International Electrotechnical Commission
IEEE	Institute of Electrical and Electronic Engineers
IG	Ground (not residual) current
Igd	Differential Ground current
IGMP	Internet Group Management Protocol
IID	Instantiated IED Capability Description
IN	CT Residual Current (3I0) or Input
INC SEQ	Incomplete Sequence
INIT	Initiate
INST	Instantaneous
INV	Inverse
I/O	Input/Output
IOC	Instantaneous Overcurrent
IOV	Instantaneous Overvoltage
IRC	Inter-Relay Communication
IRIG	Inter-Range Instrumentation Group
ISO	International Standards Organization
IUV	Instantaneous Undervoltage
K0	Zero Sequence Current Compensation
kA	kiloAmpere
KDC	Key Distribution Center
kV	kiloVolt
LCD	Liquid Crystal Display
LDBN	Bias Neutral Level Detector
LED	Light Emitting Diode
LEO	Line End Open
LFT BLD	Left Blinder
LOOP	Loopback
LPU	Line Pickup
LRA	Locked-Rotor Current
LTC	Load Tap-Changer
LV	Low Voltage
M	Machine
M2M	Machine to Machine
mA	MilliAmpere
MAG	Magnitude
MAN	Manual / Manually
MAX	Maximum
Mb	Megabit
MIC	Model Implementation Conformance
MIN	Minimum, Minutes
MMI	Man Machine Interface
MMS	Manufacturing Message Specification
MRT	Minimum Response Time
MSG	Message
MTA	Maximum Torque Angle
MTR	Motor
MU	Merging Unit
MVA	MegaVolt-Ampere (total 3-phase)
MVA_A	MegaVolt-Ampere (phase A)
MVA_B	MegaVolt-Ampere (phase B)
MVA_C	MegaVolt-Ampere (phase C)
MVAR	MegaVar (total 3-phase)
MVAR_A	MegaVar (phase A)
MVAR_B	MegaVar (phase B)
MVAR_C	MegaVar (phase C)
MVARH	MegaVar-Hour
MW	MegaWatt (total 3-phase)
MW_A	MegaWatt (phase A)
MW_B	MegaWatt (phase B)
MW_C	MegaWatt (phase C)
MWH	MegaWatt-Hour
N	Neutral
N/A, n/a	Not Applicable
NCIT	Non-conventional instrument transformer
NEG	Negative
NMPLT	Nameplate
NOM	Nominal
NTR	Neutral
O	Over
OC, O/C	Overcurrent
OCSP	Online Certificate Status Protocol
OF	Overload Factor
O/P, Op	Output
OP	Operate
OPER	Operate
OPERATG	Operating
O/S	Operating System
OSI	Open Systems Interconnect
OSB	Out-of-Step Blocking
OUT	Output
OV	Overvoltage
OVERFREQ	Overfrequency
OVLD	Overload
P	Phase
PB	Process Bus
PBM	Process Bus Module
PC	Phase Comparison, Personal Computer
PCNT	Percent
PF	Power Factor (total 3-phase)
PF_A	Power Factor (phase A)

PF_B	Power Factor (phase B)
PF_C	Power Factor (phase C)
PFLL	Phase and Frequency Lock Loop
PHS	Phase
PICS	Protocol Implementation & Conformance Statement
PKI	Public Key Infrastructure
PKP	Pickup
PLC	Power Line Carrier
POS	Positive
POTT	Permissive Over-reaching Transfer Trip
PP	Power Profile
PPP	Point-to-Point
PPS	Pulse per Second
PRESS	Pressure
PRI	Primary
PROT	Protection
PRP	Parallel Redundancy Protocol
PSEL	Presentation Selector
PTP	Precision Time Protocol
pu	Per Unit
PUIB	Pickup Current Block
PUIT	Pickup Current Trip
PUSHBTN	Pushbutton
PUTT	Permissive Under-reaching Transfer Trip
PWM	Pulse Width Modulated
PWR	Power
QUAD	Quadrilateral
R	Rate, Reverse
RA	Registration Authority
RCA	Reach Characteristic Angle
RedBox	Redundancy Box
REF	Reference
REM	Remote
REV	Reverse
R-GOOSE	Routable GOOSE
RI	Reclose Initiate
RIP	Reclose In Progress
RGT BLD	Right Blinder
RMA	Return Materials Authorization
RMS	Root Mean Square
ROCOF	Rate of Change of Frequency
ROD	Remote Open Detector
RRTD	Remote Resistance Temperature Detector
RST	Reset
RSTR	Restrained
RTD	Resistance Temperature Detector
RTU	Remote Terminal Unit
RX (Rx)	Receive, Receiver
s	second
S	Sensitive
SAN	Singly Attached Node
SAT	CT Saturation
SBO	Select Before Operate
SCADA	Supervisory Control and Data Acquisition
SCC	Serial Communication Controller
SCD	System Configuration Description
SCL	Substation Configuration Language
SCEP	Simple Certificate Enrollment Protocol
SEC	Secondary
SEL	Select / Selector / Selection
SENS	Sensitive
SEQ	Sequence
SFTP	Secure Shell (SSH) File Transfer Protocol, Secure File Transfer Protocol
SIR	Source Impedance Ratio
SmpSynch	Samples Synchronized
SNTP	Simple Network Time Protocol
SRC	Source
SSB	Single Side Band
SSEL	Session Selector
STATS	Statistics
SUPN	Supervision
SUPV	Supervise / Supervision
SV	Supervision, Service, Sampled Value
SYNC	Synchrocheck
SYNCHCHK	Synchrocheck
T	Time, transformer
TC	Thermal Capacity
TCP	Transmission Control Protocol
TCU	Thermal Capacity Used
TD MULT	Time Dial Multiplier
TEMP	Temperature
TFTP	Trivial File Transfer Protocol
TGFD	Transient Ground Fault Detection
THD	Total Harmonic Distortion
TMR	Timer
TOC	Time Overcurrent
TOV	Time Overvoltage
TRANS	Transient
TRANSF	Transfer
TSEL	Transport Selector
TUC	Time Undercurrent
TUV	Time Undervoltage
TX (Tx)	Transmit, Transmitter
U	Under
UC	Undercurrent
UCA	Utility Communications Architecture
UDP	User Datagram Protocol
UL	Underwriters Laboratories
UNBAL	Unbalance
UR	Universal Relay
URC	Universal Recloser Control
.URS	Filename extension for settings files
UV	Undervoltage
V/Hz	Volts per hertz
V_0	Zero Sequence voltage
V_1	Positive Sequence voltage
V_2	Negative Sequence voltage
VA	Phase A voltage
VAB	Phase A to B voltage
VAG	Phase A to Ground voltage
VARH	Var-hour voltage
VB	Phase B voltage
VBA	Phase B to A voltage
VBG	Phase B to Ground voltage
VC	Phase C voltage
VCA	Phase C to A voltage
VCG	Phase C to Ground voltage
VF	Variable Frequency
VIBR	Vibration
VT	Voltage Transformer
VTFF	Voltage Transformer Fuse Failure
VTLOS	Voltage Transformer Loss Of Signal
WDG	Winding
WH	Watt-hour
w/ opt	With Option
WGS	World Geodetic System
WRT	With Respect To
X	Reactance
XDUCER	Transducer
XFMR	Transformer
Z	Impedance, Zone

N60 Network Stability and Synchrophasor Measurement System

Index

Symbols

.....5-72

Numerics

10BASE-F settings 5-45
4L Discrepancy message 7-10
7R module 3-38
7S module 3-37
8-bit comparator
  actual values 6-26
  application example 5-358
  FlexLogic operands 5-245
  logic diagram 5-358
  settings 5-355
  specifications 2-22
8-bit switch
  FlexLogic operands 5-245
  settings 5-361
  specifications 2-23

A

AC Bank assigned is not configured 5-241
AC current inputs
  explained 3-12
  settings 5-163
  specifications 2-25
AC voltage input specifications 2-25
Accents 4-56
Access Violation message 3-62
Acknowledge alarm 6-5
Activate relay 3-47
Active setting group 5-271
Actual values 6-1
  alarms for graphical front panel 6-4
  display on graphical front panel 4-35, 4-36
  monitor with Modbus Analyzer 9-1
  not activated graphical front panel 4-53
Add Device from File option
  restore settings to online device 9-12
  save to Offline Window 3-70
Add Device to Offline Window preferences 9-10
Add module, check settings not defaulted 9-18
Add relay 3-51
Administrator
  command to force logoff 7-7
  no automatic logout from front panel 5-18
  role for CyberSentry 2-5
AGGR Config Mismatch message 7-13
Aggregator
  actual values 6-29
  error message 7-10
  settings 5-213
Alarm LEDs 5-141
Alarms
  acknowledge 4-34, 6-4, 6-5
  add 4-35, 5-36
  messages 7-8
  overview 4-32
  reset 4-34, 6-5
AND gate explained 4-84
Annunciator editor 4-35
ANSI device numbers 2-2
Apparent power
  actual values 6-21
  specifications 2-24

Application examples
breaker trip circuit integrity 5-337
contact inputs 5-368
direct inputs and outputs 5-376
latching outputs 5-372
sensitive directional power 5-313
Apply settings to other device 9-7
Approvals 2-35
Architecture, relay 5-242
Audit list of port numbers 5-45
Authentication by device or server 5-14
Automatic discovery of UR devices 3-61
Auxiliary voltage channel 3-12
Auxiliary voltage metering 6-21
AWG wire size
CT/VT 3-12
F485 converter 3-49
G.703 interface 3-37
module 7S 3-37
modules 6X, 6W 3-16
modules 7L, 7M, 7N, 7P, 74 3-44
modules 7T, 7W, 7V 3-41
RS422 and fiber interface 3-44

B

Back up settings 5-61, 9-9
Bad IRIG-B Signal message 7-11
Bad PTP Signal message 7-11
Banks 5-163, 5-164
Basic front panel
dimensions 3-2
FlexLogic 5-245
interface 4-16
IP rating 2-33
keypad 4-38
labels 4-48
LEDs 4-40, 5-141
navigation 4-50
order code over two lines 4-38
order codes 2-8
pushbuttons 5-145
specifications 2-21
use, change setting 4-52
Battery
disposal 9-20
monitor with annunciator alarm 4-35
monitor with Engineer 4-76
monitor with FlexLogic 5-255
monitor with metering window 4-36
monitor with self-test alarm 5-143
replace 9-19
Baud rate 5-42
Blinking alarm 4-34
Block setting 5-5
Bootloader upgrade 9-15
Breaker control
control of two breakers 4-59
dual breaker logic 5-177
FlexLogic operands 5-246
settings 5-171
with IEC 61850 5-98
Brick
interface module described 3-13
remote resources actual values 6-30
remote resources settings 5-162
self-test errors 7-16
Trouble message 7-17
Brightness 5-26

C

C37.94 communications 3-46
Cannot log in 2-5
Caution symbol in Offline Window 4-70
CE certification 2-35
Certification 2-35
Changes D-1
Channel
banks 5-163, 5-164
tests 6-13
Check Settings message 7-9
Chinese limited to 10 character input 5-26
CID file, SCD file 5-79
CID files
create 5-61
explained 3-70
import 3-70, 9-13
import preferences 9-10
view 5-61
Circuit monitoring applications 5-336
Cleaning 2-35
Clear
files and records 9-23
LEDs 5-374
relay records using IEC 61850 5-103
relay records using settings 5-41
security logs 7-7
Clock
graphical front panel format 5-30
IRIG-B 3-32
PTP 5-125
set 7-3
settings 5-123, 5-130, 6-32
settings with Process Bus Module 5-129, 5-220, 6-32
synchronize several devices 5-125
Close
HTTP port 5-115
IEC 60870-5-104 port 5-117
Modbus port 5-51
TFTP port 5-116
Web access port 5-115
COMM Path Incomplete message 7-10, 7-12

Comm status remaining connections 6-13
Command line interface to software C-1
Command password 4-60, 5-10
Commands
  menu 7-1
  with IEC 61850 5-103
Commissioning 8-1
Communications
  10BASE-F 5-45
  connecting to the UR 3-59, 3-62
  DNP 5-54
  HTTP 5-115
  IEC 60870-5-10 5-117
  IEC 60870-5-104 5-116
  inter-relay specifications 2-31
  Modbus registers 5-122
  Modbus settings 5-51
  modem 3-60
  Protocol selection 5-52, 9-13
  RS232 ..... 3-28, 5-42
  RS485 ..... 3-31, 5-42
  settings 5-45, 5-54
  specifications 2-29, 2-31
  web server 5-115
Comparator, 8-bit
  actual values 6-26
  FlexLogic operands 5-245
  settings 5-355
  specifications 2-22
Compare settings 9-8
Comparison Report button 3-69
Compliance 2-35
COMTRADE files, view 4-81
Conducted RFI specifications 2-34
Connect, unable to 3-62, 5-46
Connectors, LC and ST 3-8
Contact inputs
  actual values 6-5
  FlexLogic operands 5-252
  settings 5-367
  specifications 2-25
  thresholds 5-367
  wet and dry connections 3-21
Contact outputs
  actual values 6-7, 6-33
  explained 5-370
  FlexLogic operands 5-252
  settings 5-370
Control elements 5-315
Control power
  description 3-10
  specifications 2-29
Control pushbuttons
  FlexLogic operands 5-245
  logic diagram 5-145
  settings 5-144
  specifications 2-22
Convert device settings 9-5
Copper SFP cable length 3-6
Copy of Copy of 9-7
Copy settings for upgrading 9-5
Copy settings to other device 9-7
Counters
  actual values 6-9
  settings 5-338
CPU module diagram 3-7
CPU wiring 3-29
CRC alarm 5-159
Create device folders prompt 9-14
Critical failure relay specifications 2-28
CSA certification 2-35
CT bank settings 5-163
CT failure
  FlexLogic operands 5-246
  logic diagram 5-344
  settings 5-342
CT inputs 3-11, 5-163
CT wiring 3-12
Current bank 5-163
Current demand 5-137
Current harmonics specifications 2-24
Current metering actual values 6-19
Curves
  definite time 5-287
  FlexCurves 5-188, 5-287
  IAC 5-285
  IEC 5-283
  IEEE 5-282
  types 5-282
Cutout, panel 3-2
CyberSentry
  FlexLogic operands 5-245
  installation 3-65, 5-22
  RS485 port limitation 5-15
  security commands 7-7
  security overview 2-4
  software options 2-32
  specifications 2-32
  system logs 5-23

D

D400 connection 3-71
Dark graphical front panel 5-32
Data logger
  actual values 6-37
  clearing 5-41, 7-2
  settings 5-136
  specifications 2-23
Data set
  defined 5-69
Data, reading values 6-1
Dataset member is empty message 5-70

Date
firmware 6-39
last cleared fault report date 6-35
last cleared oscillography date 6-37
last fault report date 6-35
last settings change 6-38
manufacturing date 6-38
set 5-28, 5-123, 5-130, 6-32, 7-3
DCmA inputs 6-29
actual values 6-29
settings 5-384
specifications 2-26
DCmA outputs
description 3-26
settings 5-386
specifications 2-29
Decommission 9-23
Default settings 9-8, 9-9
Default settings to factory default 7-4
Definite time curve 5-287
Delete files and records 5-41, 9-23
Demand metering
actual values 6-22
specifications 2-25
Demand records, clearing 5-41, 7-2
Demand, current 5-137
Deploy relay 8-1
Deploy settings 9-7
Device authentication 5-14
Device Connectivity Report in Engineer 4-77
Device information files 1-2, 4-77
Device overview 9-1
Device setup 3-61
Diagnostic Alarm COP message 7-10
Diagnostic Alarm DSP message 7-10
Diagnostic Failure message 7-8
Diagnostics Failure message 7-10
Dielectric strength 3-10
Digital counters
actual values 6-9
FlexLogic operands 5-246
logic diagram 5-340
settings 5-338
Digital elements
application example 5-337
FlexLogic operands 5-247
logic diagram 5-336
settings 5-335
Digital outputs
see Contact outputs
Digitizer
actual values 6-26
FlexLogic operands 5-247
logic diagram 5-354
settings 5-352
specifications 2-22
Dimensions 3-2
Direct analog inputs
FlexLogic operands 5-252
settings 5-379
Direct analog outputs
settings 5-379
Direct analogs
actual values 6-27
Direct Device Off message 7-10
Direct devices
settings 5-375
status 6-12
Direct I/O
application example 5-376
configuration examples 5-155
settings 5-375
Direct inputs
actual values 6-12
application example 5-376
clearing counters 7-2
FlexLogic operands 5-252
settings 5-375
specifications 2-26
Direct integer inputs
actual values 6-13
settings 5-382
Direct integer outputs
settings 5-382
Direct outputs
application example 5-376
clearing counters 7-2
settings 5-375
specifications 2-29
Direct Ring Break message 7-11
Directional overcurrent
see Phase, Ground, and Neutral directional
Directional polarization 5-290
Directional power, sensitive actual values 6-27
Directional power, sensitive specifications 2-18
Disconnect switch
FlexLogic operands 5-251
logic 5-185
settings 5-180
Discover button 3-61
Disk space required 3-49
Display settings 5-26
Disposal 9-25
Dispose of battery 9-20
Disturbance detector
FlexLogic operands 5-250
DNP
connections remaining 6-13
select protocol 5-52, 9-13
settings 5-54
view Points List in web browser 5-57
Do not default Remote Input ID check box 5-79
Do you want to create device folders 9-14
DOS Partition Alarm message 7-10

Downgrade
firmware 9-15
software 9-14
Download
files from relay 9-3
settings to relay 9-7
Drag and drop files 4-3
Duplicate
device settings 9-7
settings for upgrading 9-5
Dynamic switch
see 8-bit switch

E

Edit data model 5-63
Eight-bit comparator
actual values 6-26
application example 5-358
FlexLogic operands 5-245
logic diagram 5-358
settings 5-355
specifications 2-22
Eight-bit switch
FlexLogic operands 5-245
settings 5-361
specifications 2-23
Electrostatic discharge specifications 2-34
Elements 5-5
Enable Controls from GFP 5-30
End of life 9-25
Energy metering
actual values 6-22
clearing 5-41, 7-2
specifications 2-24
EnerVista UR setup
command line interface C-1
drag and drop files 4-3
event recorder 4-2
firmware upgrade or downgrade 9-15
installation 3-50
oscillography 4-2
requirements 3-49
restart relay 5-1
Engineer
command to force user logoff 7-7
create logic diagram 4-63
Error messages 4-71
toolbar 4-81
Warning messages 4-72
Enhanced front panel
FlexLogic 5-245
interface 4-16
IP rating 2-33
keypad 4-38
labels 4-44
LEDs 4-39, 5-141
navigation 4-50
order codes 2-8
pushbuttons 5-145
Rev. 1 and 2 explained 3-2
specifications 2-21
use, change setting 4-52
Environment backup 9-10
Equations
definite time curve 5-287
FlexCurves 5-287
FlexLogic 5-262
FlexLogic, protect 4-10
IAC curves 5-285
IEC curves 5-283
IEEE curves 5-282
Equipment Mismatch message 7-9, 7-16
Error messages 7-8
device not recognized 9-14
in Engineer 4-71
Ethernet
actual values 6-10
configuration 3-59
port failure monitoring 5-38
port settings 5-45
port, turn on or off 5-45
ports on rear panel 3-7
Quick Connect 3-64
Event cause indicators 4-39
Event Cause LEDs 4-41
Event recorder
actual values 6-35
clearing 5-41, 7-2
records explained 4-2
specifications 2-23
system logs 5-23
via EnerVista software 4-2
view event records 6-35
Events setting 5-6
Export settings 9-9

F

F485 3-49
Factory default reset 5-8, 5-20, 7-4
Far-End Fault Indication 5-47
Fast form-C relay specifications 2-28
Fast transient testing specifications 2-34
Features 2-1
Feeder
single-line diagram 4-21

Fiber signal loss detection 5-47
File transfer by IEC 61850 ..... 5-108, 5-109
File transfer by TFTP 5-115
File transfer SFTP disable 5-53
Files
  delete 9-23
  download from relay 9-3
  drag and drop 4-3
  protect FlexLogic with password 4-10
  protect with password 4-8
  repaired 9-7
  transfer from relay 4-17
  transfer to relay 4-1, 4-17
Filter software fields using double-click 5-264
Firmware
  lock 3-65, 5-11, 5-20, 5-22
Firmware not supported by EnerVista 9-16
Firmware revision 6-39
Firmware upgrade or downgrade 9-15
Firmware version does not match EnerVista 9-14
First Ethernet Fail
  error message 7-11
  set alarm 5-38
Flash memory 9-23
Flash memory data storage 3-11
Flash messages 5-26
Flex State parameters
  actual values 6-10
  settings 5-151
  specifications 2-21
FlexAnalog parameters A-1
FlexCurves
  equation 5-287
  settings 5-188
  specifications 2-21
  table 5-188
FlexElements
  actual values 6-26
  direction 5-264
  FlexLogic operands 5-247
  hysteresis 5-264
  logic diagram 5-264
  pickup 5-264
  settings 5-263
  specifications 2-21
FlexLogic
  create logic diagram with Engineer 4-63
  edit with equation editor 5-262
  equation editor 5-262
  equation example 5-320
  error message 7-9
  evaluation 5-257
  example 5-257
  export 9-7
  gate characteristics 5-255
  import operands 3-66
  lock equations 4-10
  lock equations to serial number 4-12
  operands 5-244
  operators 5-255
  rules 5-256
  security 4-10
  specifications 2-21
  status in single-line diagram of graphical front panel 4-32
  timer settings 5-262
  worksheet 5-259
FlexMath
  logic diagram 5-271
  settings 5-268
Force contact inputs 5-393
Force contact outputs 5-394, 5-398
Foreign language
  keyboard 4-56
  setting 5-26
Form-A relay
  actual values 6-7, 6-33
  high-impedance circuits 3-15
  outputs 3-14
  specifications 2-28
Form-C
  actual values 6-7, 6-33
  order codes 2-8
  outputs 3-14
  replacement modules 2-13
  specifications 2-28
FPGA
  revision 6-39
  upgrade 9-17
Frequency metering
  actual values 6-23
  specifications 2-25
Frequency rate of change
  actual values 6-28
  FlexLogic operands 5-247
  logic diagram 5-352
  settings 5-350
  specifications 2-19
Frequency specifications 2-25
Frequency testing 8-1
Frequency tracking 6-25
Frequency, nominal 5-165

Front panel 3-2
clear 5-374
custom labels 4-44
dimensions 3-2
interface 4-16
keypad 4-38
labels 4-44
language 5-26
LEDs 4-39
number of characters 4-18
order code with two lines on basic panel 4-38
password change 4-59
pushbuttons 5-145
specifications 2-32
switch between enhanced and basic 3-50
trouble message 7-11
types 4-16
use 4-16
use in EnerVista 4-18, 6-4
Function setting 5-5
Fuse failure 5-340
Fuse specifications 2-27
Fuses not field-replaceable 9-24

G

G.703 3-37
wire size 3-37
Gates, logic explained 4-84
Gateway address 3-53, 5-48
GE type IAC curves 5-285
Getting help 1-2
GFP Version Mismatch message 7-11
GOOSE
actual values 6-27
Process Bus Module limitations 5-68
settings 5-68
simulation operands 5-255
simulation settings 5-396
GOOSE & SV simulation settings 5-396
Graphical front panel
actual value menu not activated 4-53
actual values, phasors 4-57
alarm acknowledge, reset 4-34, 6-4, 6-5
alarm setup 5-36
annunciator editor 4-35
date and time 5-30
explained 4-18
FlexLogic 5-245
Home page configuration 5-28
interface 4-17
IP rating 2-33
labels 4-49
LEDs 4-42, 5-141
Metering Editor 4-36
navigation 4-51
navigation keys 4-38
no display 5-32
order codes 2-8
phasor diagram 4-57, 5-32
pushbutton testing 7-4
pushbuttons 5-30, 5-145
pushbuttons 9 to 16 4-30
settings 5-28
settings, breaker 5-174
settings, switch 5-183
single-line diagrams 4-20
specifications 2-29, 2-32
time 5-30
USB port 5-122
use, change setting 4-53
view LEDs and pushbuttons in software 6-5
Ground current metering 6-20
Ground IOC
FlexLogic operands 5-247
logic diagram 5-304
settings 5-303
specifications 2-17
Ground TOC
FlexLogic operands 5-247
logic diagram 5-303
settings 5-302
specifications 2-17
Group 1 switch after powerup 5-272
Grouped elements 5-271
Guarantee D-1

H

HardFiber
Brick Trouble message 7-17
interface module described 3-13
order codes for compatible URs 2-8
remote resources actual values 6-30
remote resources settings 5-162
self-test errors 7-16
Harmonic content 6-24

Harmonic detection
actual values 6-29
FlexLogic operands 5-247
settings 5-348
specifications 2-20
Harmonics
actual values 6-24
specifications 2-24, 2-25
Heartbeat messages 5-69, 5-73
Help, getting 1-2
Hexadecimal convert to decimal 5-123
Home page configuration 5-28
HSR
actual values 6-35
explained 5-218
support 2-2
HTTP 5-115
port, close 5-115
Humidity specifications 2-33
Hysteresis 5-264

I

IAC curves 5-285
ICD file 5-79
IEC 60870-5-103 protocol
explained 5-117
select protocol 5-52, 9-13
settings 5-117
IEC 60870-5-104 protocol
connections remaining 6-13
port, close 5-117
select protocol 5-52, 9-13
settings 5-116
IEC 61850 protocol
DstMAC addresses message 5-72
explained 5-58
file transfer 5-108, 5-109
heartbeat messages 5-69, 5-73
IID file 9-9
settings in EnerVista 5-58
specifications 2-29
IEC 61850-90-5 protocol
actual values 6-29
explained 5-196
settings 5-201
IEC CID files 5-61
IED setup 3-50
IEEE C37.94 communications 3-46
IEEE curves 5-282
IID file 3-70, 5-61, 9-9
import preferences 9-10
Import SCL file when using Process Bus Module 5-69
Import settings file 3-66
Import settings from SCD or CID file 9-13
In service indicator 7-8
In Service LED 3-47
Incompatible device order codes or versions 9-16
Inputs
AC current specifications 2-25
AC currents 5-163
AC voltage 5-164
AC voltage specifications 2-25
contact input specifications 2-25
contact inputs 5-367, 5-393
DCmA input specifications 2-26
DCmA inputs 3-26
direct input specifications 2-26
IRIG-B 3-32
IRIG-B specifications 2-26
RTD input specifications 2-26
RTD inputs 3-26
virtual 5-369
Installation 3-2
activate relay 3-47
add UR devices with auto discovery 3-61
communications 3-29
CT inputs 3-12
RS485 3-31
set relay to Programmed 3-47
settings 5-161
silent 9-15
Instantaneous overcurrent
see Phase, Ground, and Neutral IOCs
Interface
front panel 4-16
software 4-1
Internet access 5-115
Inter-relay communication specifications 2-31
IOC
see Phase, Ground, and Neutral IOCs
IP address
enter in software 5-45
enter on front panel 3-52, 4-38
gateway 5-48
rules 3-52
view 5-45
IP address migration 3-70
IP rating 2-33
IP54 for enhanced front panel 3-2
IRIG-B
connection on rear panel 3-7
CPU wiring 3-29
explained 3-32
port on rear panel 3-7
specifications 2-26
ISO standards 2-35

J

Japanese limited to 10 character input 5-26

K

Keyboard 4-56
Keypad 4-38

L

Labels, front panel 4-44, 4-77
Lamp test 7-4
Language setting 5-26
Laser module 3-36
Latching outputs
  application examples 5-372
  settings 5-371
  specifications 2-28
LC fiber 2-8, 3-7
LC fiber connector 3-8
LED test
  commands 7-4
  FlexLogic operand 5-253
  settings 5-139
  specifications 2-22
LEDs
  clear 5-374
  custom labels 4-44
  explained 4-39
  In Service 3-47
  power supply module 3-11
  settings 5-141
  Trouble 3-47
  view in software for graphical front panel 6-5
License
  open source D-3
  single user 3-50
Link power budget 2-31
Load shedding 5-327, 5-351
Local access denied message 4-61, 5-19
Local access, explained 5-9
Local Setting Authorization 9-16
Lock
  firmware 3-65, 5-11, 5-20, 5-22
  settings 3-65, 5-20, 5-22
Log in with password 3-65, 5-10
Log in, multiple users cannot 2-5
Log out
  Administrator manually from front panel 5-18
  users forcefully 7-4
Logic diagram
  create 4-63
  explained 4-62
Logic gates, FlexLogic 4-84, 5-256
Logical node or device 5-63
Logs, system 5-23
Lost password 5-8
Low on Memory message 7-10

M

MAC address
  actual values 6-38
  examples 5-44
  RxGOOSE 5-76
  settings for redundancy 5-46
  TxGOOSE 5-71
Maintenance
  alert error message 7-10
  battery replacement 9-19
  cleaning 2-35
  commands 7-4
  module replacement 9-17
  upgrade or downgrade 9-15
Manufacturing date 6-38
Maximum 6X, 6X wire size 3-16
Maximum CT/VT wire size 3-12
Measurements of UR and panel cutout 3-2
Media storage alarm message 7-13
Memory low message 7-10
Memory requirements 3-49
Menu navigation 4-50
Message about upgrade over Internet 9-16
Messages
  clear front panel 5-374
  error 7-8
  errors and warnings in Engineer 4-70
Metering
  conventions 6-15, 6-16
  demand specifications 2-25
  editor in graphical front panel 4-36
  frequency specifications 2-25
  power specifications 2-24
  THD specifications 2-24, 2-25
  voltage specifications 2-24
Microsoft Windows requirement 3-49
Mimic diagrams 4-20
Missing messages, RxGOOSE fail 7-12, 7-13
MMS connections remaining 6-13
Modbus
  connections remaining 6-13
  enter values in Modbus Analyzer 9-1
  Flex State parameters 5-151
  Modbus Analyzer window 9-1
  port, close 5-51
  register entry 5-122
  settings 5-51
  user map 5-122
Model information, view 6-38
Model number 3-1
Modem connection 3-60
Modification file number 6-39
Module 7R 3-38
Module 7S 3-37
Module Failure message 7-16

Modules
add and check settings not defaulted 9-18
communications 3-29
CT/VT 3-11
order codes 2-13
power supply 3-10
replace 9-17
transducer I/O 3-27
Monitor
actual values 9-1
actual values with Metering Editor 5-32
devices 9-1
use alarms 5-36
Monitoring elements settings 5-340
Mounting 3-2
MSOD
actual values 6-29
FlexLogic operands 5-250
settings 5-362
specifications 2-20
Multi-range signal oscillation detector
actual values 6-29
FlexLogic operands 5-250
settings 5-362
specifications 2-20

N

Nameplate, rear 3-1
NAND gate explained 4-84
Navigation keys 4-38
Network settings migration 3-66
Neutral directional overcurrent
FlexLogic operands 5-248
logic diagram 5-301
polarization 5-299
settings 5-297
specifications 2-18
Neutral IOC
FlexLogic operands 5-248
logic diagram 5-296
settings 5-295
specifications 2-17
Neutral TOC
FlexLogic operands 5-248
logic diagram 5-295
settings 5-294
specifications 2-17
No connection 5-46
Non-volatile data storage 3-11
Non-volatile latches
FlexLogic operands 5-247
settings 5-267
specifications 2-21
NOR gate explained 4-84
NOT gate explained 4-84
Number of channels exceeds total allowable, SV Stream
Config 5-236

O

Obtain list of port numbers 5-45
One-shot
commands menu, PMU 7-5
error compiling in Engineer 4-71
FlexLogic operators 5-256
Open pole detector
FlexLogic operands 5-248
logic diagram 5-311
settings 5-310
specifications 2-20
Open source licenses D-3
Operating system
language 3-50
requirements 3-49
Operating temperature 2-33
Operating times 2-17
Operator command to force logoff 7-7
OR gate explained 4-84
Order codes 2-8
two lines on basic front panel 4-38
update 3-60, 7-4
view as actual values 6-38
Oscillatory GOOSE maintenance message 7-11
Oscillatory transient testing specifications 2-34
Oscillography
actual values 6-37
clearing 5-41, 7-2
how to 5-134
settings 5-133
specifications 2-23
via EnerVista software 4-2
view waveform in actual values window 6-37
view waveform in event record 6-35
Out of service 5-1
Out-of-step tripping 2-19, 5-274
Outputs
contact outputs 5-370
control power specifications 2-29
critical failure relay specifications 2-28
Fast form-C relay specifications 2-28
Form-A relay 2-27, 3-14
Form-C relay 3-14
Form-C relay specifications 2-28
latching output specifications 2-28
latching outputs 5-371
virtual outputs 5-373
Over Temperature message 7-14
Overcurrent curves
FlexCurves 5-287
IAC 5-285
IEC 5-283
types 5-282

Overfrequency
FlexLogic operands 5-248
logic diagram 5-329
settings 5-328
specifications 2-19
testing 8-1
Overvoltage
phase 2-18, 5-248, 5-308

P

Panel cutout 3-2
Parallel Redundancy Protocol
actual values 6-14
explained 5-47
settings 5-45
settings with Process Bus Module 5-217
specifications 2-30
Parity 5-42
Part numbering 2-8
Passwords
authentication by device or server 5-14
bypass authentication 5-21
change 4-59
change after installation 3-65
change does not take relay out of service 5-1
command 4-60, 5-10
explained 2-4
FlexLogic operands 5-254
lockout 4-61
lost password 5-8
requirements 5-8
reset to factory defaults 5-8
rules 5-8
settings 4-60, 5-10
settings templates 4-8
wrong entry 4-61
PBM PTP settings 5-129, 5-220
Permissive functions 5-304
Per-unit quantity 5-5
Phase angle metering 6-16
Phase current metering 6-19
Phase directional overcurrent
FlexLogic operands 5-248
logic diagram 5-293
phase A polarization 5-291
settings 5-290
specifications 2-17
Phase IOC
FlexLogic operands 5-248
logic diagram 5-290
settings 5-289
specifications 2-17
Phase overvoltage
FlexLogic operands 5-248
logic diagram 5-309
settings 5-308
specifications 2-18
Phase rotation 5-165
Phase TOC
FlexLogic operands 5-249
logic diagram 5-289
settings 5-287
specifications 2-17
Phase undervoltage
FlexLogic operands 5-249
logic diagram 5-308
settings 5-306
specifications 2-18
Phasor display graphical front panel 4-57, 5-32
Phasor explained 5-195
Ping test times out 5-46
PMU
actual values 6-28, 6-29, 6-38
clear records 7-2
connections remaining 6-14
explained 5-195
number in UR device 5-196
see Synchrophasor
settings, aggregator 5-213
settings, recording 5-212
settings, tests 5-394
specifications 2-23
status of activation 6-39
Points List, view DNP 5-57
Port
Ethernet, turn on or off 5-45
failure monitoring 5-38
HTTP, close 5-115
IEC 60870-5-104, close 5-117
Modbus, close 5-51
on rear panel 3-7
settings for Process Bus Module 5-132
TFTP, close 5-116
USB 4-17
Port number
combinations with protocols 5-52
connectivity report of those used 4-77
DNP 5-54
HTTP 5-115
IEC 60870-5-104 5-116
list of 5-45
Modbus 5-51
Modbus during installation 3-60
RADIUS 5-16
SNTP 5-127
speed for Process Bus Module 3-8
system log 5-16, 5-18
TFTP 5-115

Power metering
specifications 2-24
values 6-21
Power off, save data first 3-11
Power supply
description 3-10
diagram 3-7
LED on module 3-11
removal to replace battery 9-19
specifications 2-27
wire size 3-11
Power swing blocking 2-19, 5-273
Power swing detect
FlexLogic operands 5-249
logic diagram 5-279
settings 5-272
specifications 2-19
Power system settings 5-165
Precision Time Protocol
clock settings 5-123, 5-130, 6-32
port behavior 5-46
settings 5-125
settings with Process Bus Module 5-129, 5-220, 6-32
specifications 2-30
Preferences
comparing settings 9-8
Engineer 4-78
IEC 61850 5-63
import file 9-10
Preserve custom attributes importing SCD/CID files 9-10
Press Reset Key message 7-14
Print front panel labels 4-44, 4-77
Process bus
error messages 7-16
order codes for compatible URs 2-8
overview 3-13
Process Bus Failure message 7-16
Process Bus Module
actual values 6-30
FlexLogic operands 5-254
GOOSE limitations 5-68
PBM PTP settings 5-129, 5-220
port speeds 3-8
ports 5-132
PRP 5-217
remote resources actual values 6-30
SV Stream Config settings 5-226
Time Sync settings 6-32
time with PTP 5-129, 5-220, 6-32
Process Bus Trouble message 7-17
Product information
actual values 6-38
Device Connectivity Report in Engineer 4-77
firmware revision 6-39
Programmed mode 3-47
Protection elements 5-5
Protection Summary interface 3-63, 4-5, 5-316
Protocol selection 5-52, 9-13
Prototype Firmware message 7-12
PRP
actual values 6-14
explained 5-47
Process Bus Module 5-217
settings 5-45
settings with Process Bus Module 5-217
specifications 2-30
PTP
clock settings 5-123, 5-130, 6-32
port behavior 5-46
settings 5-125
settings with Process Bus Module 5-129, 5-220, 6-32
specifications 2-30
pu quantity 5-5
Pushbuttons
control FlexLogic 5-245
control logic diagram 5-145
control settings 5-144
control specifications 2-22
enable for graphical front panel 5-30
testing 7-4
user-programmable FlexLogic 5-255
user-programmable logic diagrams 5-150
user-programmable settings 5-145
user-programmable specifications 2-22
view in software for graphical front panel 6-5

Q

Quick Connect 3-63, 3-64

R

RADIUS server
authentication 5-14
explained 2-4, 2-7
setup B-1
RAM Filesystem Fail message 7-9
RAM required 3-49
Reactive power
actual values 6-21
specifications 2-24
Real power 6-21
Real power specifications 2-24
Real-time clock
settings 5-123, 5-130, 6-32
settings with Process Bus Module 5-129, 5-220, 6-32
Reboot relay
using EnerVista 5-1
using relay 7-4
Recloser curves 5-190, 5-287
Recycling 9-25

Redundancy
HSR support 2-2
PRP actual values 6-14
PRP explained 5-47
settings 5-45
SNTP 5-127
specifications 2-30
Relay architecture 5-242
Relay maintenance 7-4
Relay name 5-161
Release Notes 9-15
Remote access of front panel in EnerVista 4-18, 6-4
Remote access, explained 5-9
Remote devices
actual values 6-30
Remote Input ID check box 5-79
Remote resources
settings 5-162
Remote Setting Authorization 9-16
Rename logical node or device 5-64
Repair 1-2, 9-24, D-1
Repaired file message 9-7
Replace battery 9-19
Replace Battery message 7-11
Replacement modules 2-13, 9-17
Requirements for installation 3-49
Reserved settings 4-4
Reset alarm 6-5
Reset to factory defaults 5-8, 5-20
Resetting
FlexLogic operands 5-254
setting to clear LEDs and messages 5-374
to factory defaults 5-8, 7-4
Restart relay
using EnerVista 5-1
using relay 7-4
Restore settings 9-9
Revision history D-1
RF immunity specifications 2-34
RFI, conducted specifications 2-34
RJ-45 ..... 2-8, 3-7
RMS voltage specifications 2-24
Roles for login 2-5
Rolling demand 5-138
RRTD Comm Fail message 7-12
RS232
baud rate 5-42
configuration 3-63
specifications 2-29
wiring 3-28
RS422
configuration 3-41
timing 3-43
two-channel application 3-42
with fiber interface 3-44
RS485
description 3-31
limitation with CyberSentry 5-15
port on rear panel 3-7
settings 5-42
specifications 2-29
RTD inputs
actual values 6-29
settings 5-385
specifications 2-26
RTD Trouble message 7-17
Rules for passwords 5-8
RxGOOSE
actual values 6-27
settings 5-74
RxGOOSE Fail message 7-12, 7-13
RxGOOSE Offline message 7-12

S

Sampled value explained 5-217
Save settings 4-1
Saving setting does not take relay out of service 5-1
SCADA protocol selection 5-52, 9-13
SCD file
import 9-13
import preferences 9-10
SCL compatible 5-58
SCL file import 5-79
preferences 9-10
Process Bus Module and GOOSE error 5-69
Second Ethernet Fail
error message 7-11
set alarm 5-38
Security
commands 7-7
delete files and records 9-23
EnerVista and UR secure with SSH 2-4
failed authentication lockout 5-19
forceful user logout 7-4
lock FlexLogic equations 4-10
lock settings 4-6
password for settings template 4-8
passwords for settings and commands 4-60, 5-10
RADIUS server for user authentication B-1
role-based user access 2-5
settings 5-18
software options 2-32
specifications 2-32
system and event logs 5-23
Security audit list of port numbers 5-45

Selector switch
- actual values 6-10
- application example 5-325
- FlexLogic operands 5-250
- logic diagram 5-327
- settings 5-320
- specifications 2-22
- timing 5-324

Self-tests
- description 7-8
- error messages 7-8
- FlexLogic operands 5-255
- user-programmable 5-143

Sensitive directional power
- actual values 6-27
- characteristic 5-313
- FlexLogic operands 5-247
- logic diagram 5-315
- settings 5-312
- specifications 2-18

Serial number 3-1, 4-12, 6-38

Serial ports
- device setup with 3-58
- location 4-16
- settings 5-42
- specifications 2-29
- wiring 3-44

Server authentication 5-14

Service life expected 9-3

Service Report 1-2

Setting groups 5-271, 5-272, 5-318
- active setting group 5-271
- FlexLogic operands 5-250
- troubleshooting 5-272

Settings 5-1
- back up 5-61, 9-9
- change 4-52
- change does not take relay out of service 5-1
- compare 9-8
- convert 9-5
- default to factory defaults 7-4
- edit 4-52
- export 9-7, 9-9
- import 3-66
- lock 3-65, 4-6, 5-20, 5-22
- not updated automatically among computers 3-62
- read from device with Modbus Analyzer 9-1
- restore 9-9
- upgrade 9-5
- write to device with Modbus Analyzer 9-1

Settings file 5-61
- description 4-1
- import 3-66
- takes relay out of service when loaded 4-2
- traceability 4-13
- transfer with USB stick 4-17

Settings password 4-60, 5-10

Settings Save Error message 7-13

Settings templates
- description 4-6
- edit 4-7
- enable 4-6
- password protection 4-8
- remove 4-10
- view 4-8

SFP
- explained 3-6
- maximum cable length 3-6
- module fail message 7-12

SFTP
- enable or disable 5-53
- transfer settings 9-13

Show Custom Layout button 5-227

Show Enabled button 5-227

Signal loss detection for fiber 5-47

Signal sources
- metering 6-19
- settings 5-166

Silent software installation 9-15

Simulation
- operands 5-255
- settings 5-396

Simulation bit 5-390

Single-line diagram 2-3
- create, explained 4-20
- save as separate file 4-25
- T means tagged breaker 4-24

Site Targets 9-1

Size of UR and panel cutout 3-2

SNTP Failure message 7-12

SNTP protocol
- accuracy specifications 2-30
- redundant source 5-127
- settings 5-127

Software
- installation 3-50
- interface explained 4-1
- language 5-26
- license 3-50
- silent installation 9-15
- system requirements 3-49
- update or downgrade 9-14

Source frequency 6-23

Source transfer schemes 5-304

Sources
- example of use 5-168
- metering 6-19
- settings 5-166

Special characters 4-56

Specifications 2-16

ST fiber 2-8, 3-7

ST fiber connector 3-8

Standards, certification 2-35

Status LEDs 4-41, 4-42

Stop blinking alarm 4-34

Storage Media Alarm message 7-13
Storage, UR 9-24
Substation D400 3-71
Summator
actual values 6-27
FlexLogic operands 5-250
logic diagram 5-271
settings 5-268
Support, technical 1-2
Surge immunity specifications 2-34
SV simulation settings 5-396
SV Stream Config message troubleshooting 5-232
SV Stream Config settings 5-226
stream filtering criteria 5-231
SV Stream Trouble On message 7-14
Switch
actual values 6-10
control with IEC 61850 5-100
settings 5-180, 5-320
Synchrocheck
actual values 6-25
FlexLogic operands 5-251
logic diagram 5-334
settings 5-329
specifications 2-19
Synchronize
clock using time source 5-123, 5-130, 6-32
clocks of UR devices to local computer 5-125
files between offline and online 4-70
Synchronize Devices setting for clocks 5-125
Synchrophasors
actual values 6-28
clearing PMU records 7-2
commands 7-5
explained 5-195
FlexLogic operands 5-248, 5-249
phasor measurement configuration 5-201, 5-213, 5-215
phasor measurement unit calibration 5-204
phasor measurement unit recording 5-212
test values 5-394
Syslog 5-23
System and device information 4-77
System Exception message 7-14
System Failure message 7-9
System frequency 5-165
System logs 5-23
System requirements 3-49
System setup 5-163

T

T in single-line diagram 4-24
Tagged breaker in single-line diagram 4-24
Target Device Report button 3-69
Targets
defined 4-20
menu 7-7
messages 7-7
overview by device 9-1
settings 5-5
TBD 9-10
TCP port number for web access 5-115
TDR Trouble message 7-17
Technical support 1-2
files 1-2, 9-3
Teleprotection
actual values 6-6
clearing counters 7-3
FlexLogic operands 5-251
logic diagram 5-384
overview 5-382
settings 5-160, 5-383
specifications 2-27
Temp Monitor message 7-14
Temperature
FlexLogic monitor operand 5-255
operating 2-33
Test voltages 3-10
Testing
force contact inputs 5-393
force contact outputs 5-394, 5-398
lamp test 7-4
LEDs 7-4
over/underfrequency 8-1
pushbuttons 7-4
self-test error messages 7-8
settings 5-390
synchrophasors 5-394
TFTP
port, close 5-116
put cannot be done 5-115
settings 5-115
THD metering 6-24
specifications 2-24
The URS file is part of a device folder 9-12
Thermal demand characteristic 5-138
Thermal overload protection
logic diagram 5-347
settings 5-344
specifications 2-20
Third Ethernet Fail
error message 7-11
set alarm 5-38
Tilda on front panel 4-18
Time
actual values 6-37
FlexLogic timer settings 5-262
graphical front panel format 5-30
operating 6-38
overwritten by external source 7-3
set 5-28, 5-123, 5-130, 6-32, 7-3
synchronize 5-123, 5-130, 6-32

Time overcurrent
see Phase, Neutral, and Ground TOCs
Time Sync settings 6-32
To Install Settings message 7-9
TOC
ground 5-302
neutral 5-294
phase 5-287
specifications 2-17
Toolbar 4-81
Torque for screws 2-35, 3-7, 3-16
Traceability
data 4-14
overview 4-13
rules 4-15
view data 4-15
Tracking frequency 6-25
Transducer I/O
actual values 6-29
settings 5-384
specifications 2-26
wiring 3-27
Transfer files to relay 9-7
Transfer files with USB drive 4-17
Triangle in Offline Window 4-70
Trip bus
FlexLogic operands 5-252
logic diagram 5-318
settings 5-316
Trip LEDs 5-141
Trouble indicator 7-8
Trouble LED 3-47
Troubleshooting
access to device 3-62
breaker not working 5-335
connection 5-46
dark graphical front panel 5-32
Engineer 4-71, 4-72
error messages 7-8
setting not working 5-335
SV Stream Config window 5-232
unit not programmed error 5-161
Turn off alarm 4-34
TxGOOSE
actual values 6-15
settings 5-69
TxGOOSEa & TxGOOSEb assigned to PBM message 5-72

U

UDP for TFTP 5-115
UL certification 2-35
Unable to connect to relay 3-62, 5-46
Unable to put relay in flash mode 9-16
Unauthorized access
commands 5-41
resetting 7-2, 7-3
Underfrequency
FlexLogic operands 5-252
logic diagram 5-328
settings 5-327
specifications 2-19
testing 8-1
Undervoltage
characteristics 5-304
phase 2-18, 5-306
settings 5-306
Uninstall 9-23
Unit Not Calibrated message 7-14
Unit not programmed 5-161, 7-9
Unpacking the relay 3-1
Unreturned messages alarm 5-160
Update SCL files prompt 4-70
Update settings with Convert Device Settings 9-5
Updates
bootloader 9-15
device not recognized 9-14
firmware 9-15
firmware lock 3-65, 5-11, 5-20, 5-22
FPGA 9-17
instruction manual 3-1
order code 7-4
single-line diagrams not retained 4-25
software 9-14
Upgrade device settings 9-5
Upgrade over Internet message 9-16
Upload settings to relay 9-7
URS file does not include IEC 61850 configuration 9-12
URS file is part of a device folder 9-12
URS settings file 3-70, 5-61, 9-9
USB port
graphical front panel 4-17, 5-122
Quick Connect 3-64
specifications 2-29
USB to serial converter 3-58
User accounts
authentication by device or server 5-14
multiple login limitation CyberSentry 2-5
passwords for settings and commands 4-60, 5-10
permissions by role 2-5
User-definable displays
example 5-153
invoking and scrolling 5-152
settings 5-152
specifications 2-22
User-programmable fault report
actual values 6-35
clearing 5-41, 7-2
settings 5-132
User-programmable LEDs
custom labels 4-44
defaults 4-42
settings 5-141
specifications 2-21

User-programmable pushbuttons
FlexLogic operands 5-255
graphical front panel buttons 9 to 16 4-30
logic diagrams 5-150
settings 5-145
specifications 2-22
testing 7-4
User-programmable self-test settings 5-143

V

VAR hour
actual values 6-22
specifications 2-24
Vibration testing specifications 2-34
Virtual inputs
actual values 6-6
commands 7-2
explained 5-369
FlexLogic operands 5-252
logic diagram 5-369
settings 5-369
Virtual outputs
actual values 6-7
explained 5-374
FlexLogic operands 5-253
settings 5-373
Voltage banks 5-164
Voltage deviation specifications 2-34
Voltage elements 5-304
FlexElement is phase to ground 5-266
Voltage metering
actual values 6-20
specifications 2-24
Voltage Monitor message 7-14
Voltage restraint characteristic 5-288
VT fuse failure
FlexLogic operands 5-250
logic diagram 5-342
settings 5-340
VT inputs 3-11, 3-12, 5-164
VT wiring 3-12
VTFF 5-340

W

Warning messages in Engineer 4-72
Warning symbol in Offline Window 4-70
Warning, firmware upload not supported 9-16
Warranty D-1
Watt-hour
actual values 6-22
specifications 2-24
Waveform
view in actual values window 6-37
view in event record 6-35
Waveform files, view 4-81
Web access port 5-115
Web server protocol 5-115
Windows 10
disconnect USB cable when upgrading 9-14
driver for USB to serial cable 3-58
Windows requirement 3-49
Wire size
CT/VT 3-12
F485 converter 3-49
G.703 interface 3-37
module 7S 3-37
modules 6X, 6W 3-16
modules 7L, 7M, 7N, 7P, 74 3-44
modules 7T, 7W, 7V 3-41
power supply module 3-11
RS422 and fiber interface 3-44
RS422 interface 3-41
Wiring diagram 3-9
Withdraw UR from operation 9-23
Wrong Transceiver message 7-15

X

XOR gate explained 4-84

Y

Yellow caution icon in Offline Window 4-70

Z

Zero-sequence core balance 3-12

GE Vernova
650 Markland Street
Markham, Ontario
Canada L6C 0M1
Worldwide telephone: +1 905 927 7070
Europe/Middle East/Africa telephone: +34 94 485 88 54
North America toll-free: 1 800 547 8629
Fax: +1 905 927 5098
Worldwide e-mail: GA.support@gevernova.com
Website: https://www.gevernova.com/grid-solutions/multilin/