MIG II
DIGITAL FEEDER PROTECTION



Three-phase and Ground Protection solution for Machines

imagination at work

Contents:

INTRODUCTION: What is MIG II?

APPLICATIONS

FEATURES & BENEFITS

PROTECTION & CONTROL: Block Diagram

PRODUCT ARCHITECTURE: Hardware, Software

SOFTWARE: EnerVista MII Setup

COMMUNICATIONS

SUMMARY AND ORDERING CODE

Introduction:

What is the MIG II?



Protection, control, metering, monitoring, and analysis system

- Supports ModBus communication protocol for integration with other IEDs
- Applicable to Electrical Utilities and industrial systems
- Best value for price
- Building block for systems

Applications:



The MIG II can be used for:

- Small generators and motors
- Component for bigger generator packages
- Standby/critical power protection main unit
- Transformer protection

Features and Benefits:

The MIG II features advantage such as:

- Configurable logic
- Configurable curves, digital I/Os, and LEDs
- Flash memory for field upgrades
- Two setting tables
- AC/DC power supply
- HMI with 5 keys and a 2x16 character alphanumeric display
- Isolated front RS232 serial port
- ModBus RTU communications
- Password protection for local operation
- Automatic display of last fault information

Block Diagram:

MIG II Protection and Control characteristics:

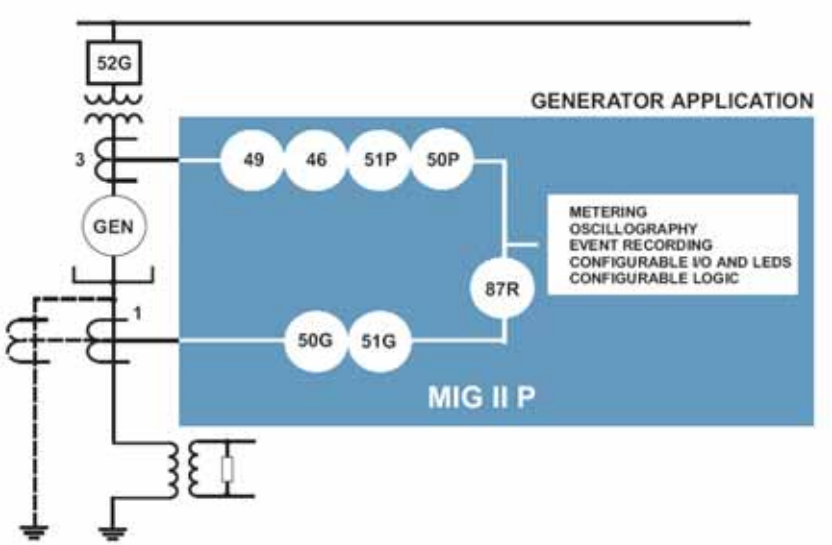

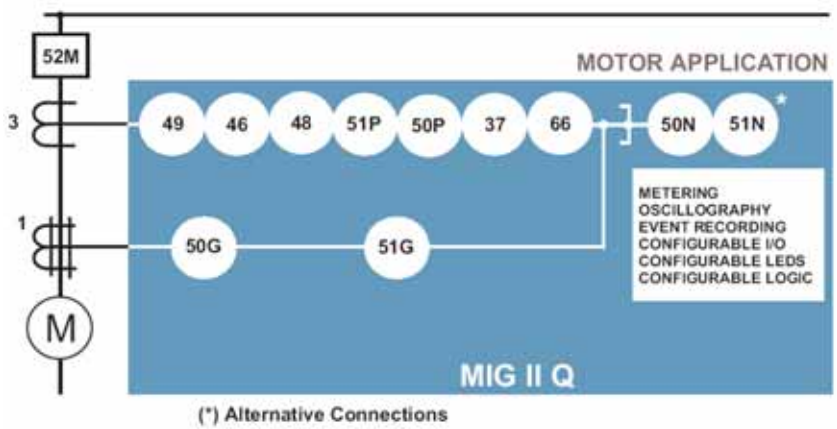

Protection and Control:

MIG II Protection functions include:

- Phase/Ground TOC
- Phase/Ground IOC
- Thermal image protection
- Circuit breaker control
- Unbalance or power reversal
- Undercurrent
- Maximum number of starts
- Locked rotor
- Configurable I/O
- 6 outputs: trip, service required, auxiliary
- 4 pre-configured overcurrent curves (ANSI, IEC)

Monitoring and Metering:

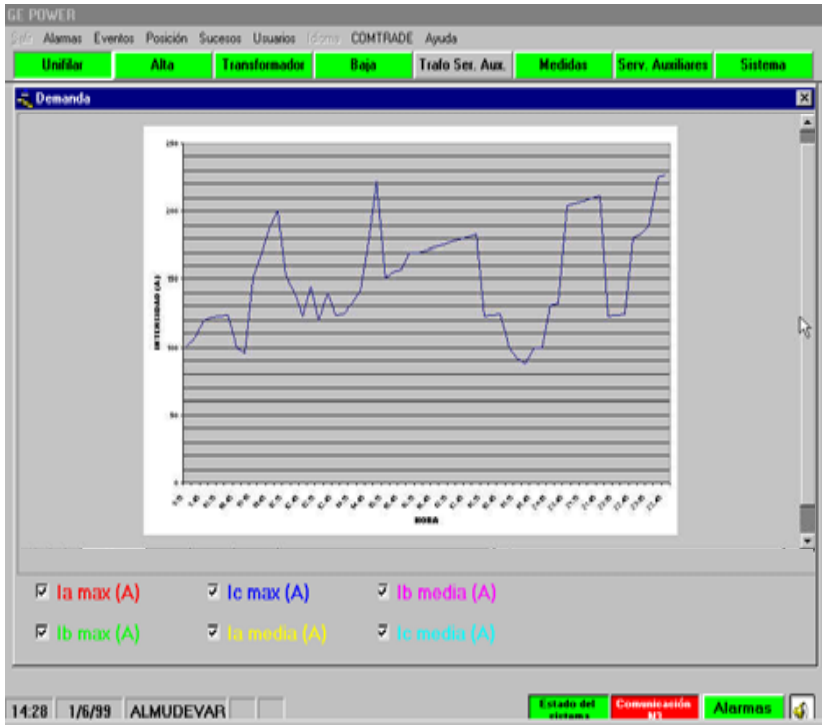

The MIG II provides:

- 24 Event record
- Analog/Digital oscillography
- Monitoring of the last 5 trips information from the display
- Per phase current metering

Typical Wiring:

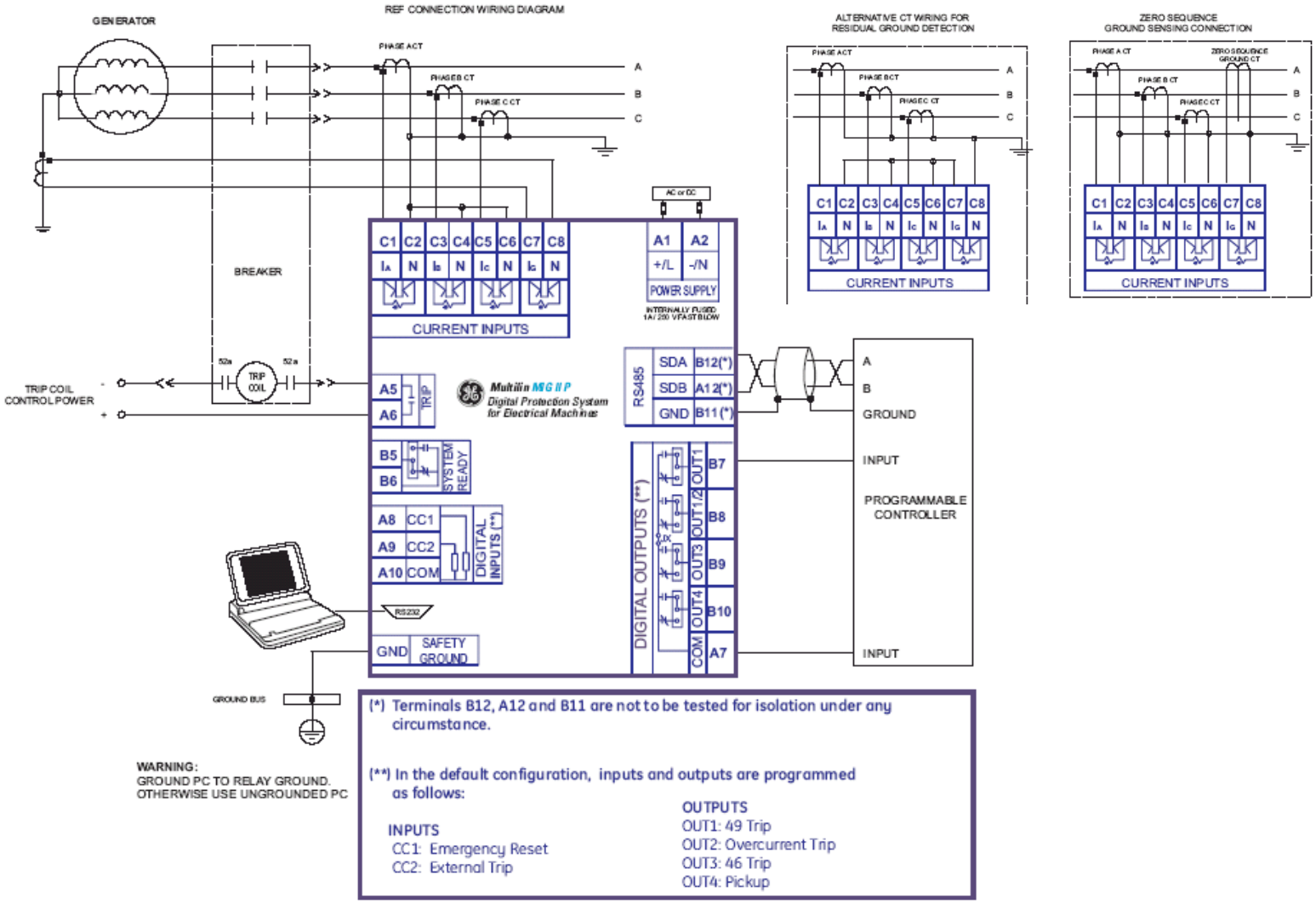

WARNING:
GROUND PC TO RELAY GROUND.
OTHERWISE USE UNGROUNDED PC

(*) Terminals B12, A12 and B11 are not to be tested for isolation under any circumstance.

(**) In the default configuration, inputs and outputs are programmed as follows:

INPUTS
CC1: Emergency Reset
CC2: External Trip

OUTPUTS
OUT1: 49 Trip
OUT2: Overcurrent Trip
OUT3: 46 Trip
OUT4: Pickup

Hardware:

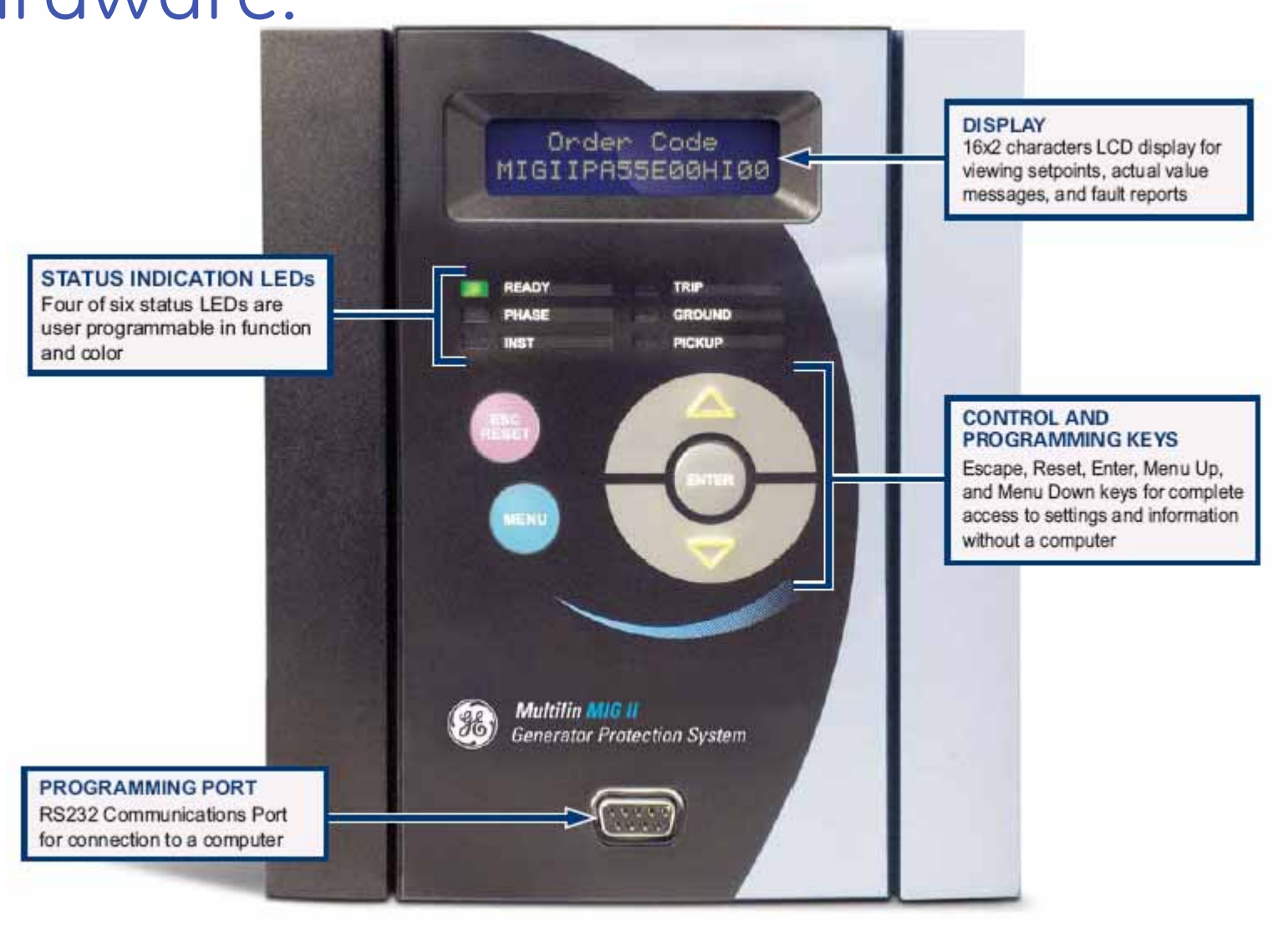
DISPLAY
16x2 characters LCD display for viewing setpoints, actual value messages, and fault reports
Order Code
MIGIIPA55E00HI00
STATUS INDICATION LEDs
Four of six status LEDs are user programmable in function and color
READY
PHASE
INST
TRIP
GROUND
PICKUP
CONTROL AND PROGRAMMING KEYS
Escape, Reset, Enter, Menu Up, and Menu Down keys for complete access to settings and information without a computer
ESC RESET
MENU
ENTER
Multilin MIG II
Generator Protection System
PROGRAMMING PORT
RS232 Communications Port for connection to a computer

Dimensions:

NOTE: Dimensions shown in inches (mm)

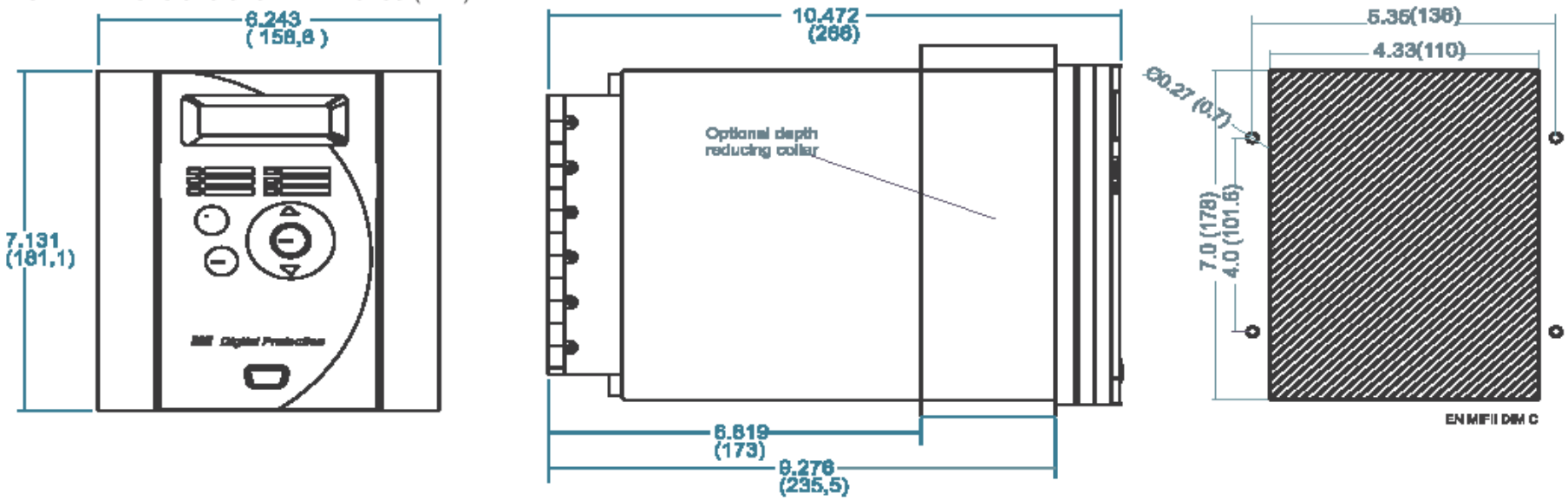

FRONT **SIDE** **CUTOUT**

EnerVista MII Setup Software:

EnerVista MII Setup Software provides the following functions:



Settings

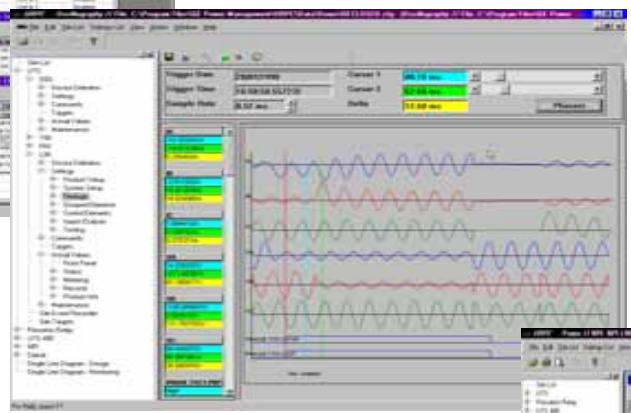

Oscillography



Metering

Communications:

- A front mounted RS232 and a rear RS485 port allow easy user interface via a PC.
- ModBus ® RTU protocol is used for all ports.
- The relay supports baud rates from 300 to 19,200 bps.
- Up to 32 MIG II relays can be addressed on a single communications channel. A unique address must be assigned to each relay via a setting when multiple relays are connected.

MIG II Summary:



- Reliable protection and control for generators, motors and transformers
- User-friendly visual software for setting, monitoring, and metering. EnerVista compatible.
- Password protected HMI for local operation
- Component based architecture for easy switching of internal boards
- Communications via front RS232, and rear RS485 ports

GE Multlilin

Av. Pinoa, 10

48170 Zamudio

SPAIN

Web: www.GEindustrial.com/multilin

Tel: +34 94 485 88 00

Fax: +34 94 485 88 45

Email: gemultilin.euro@ge.com

MIG II Ordering Code:

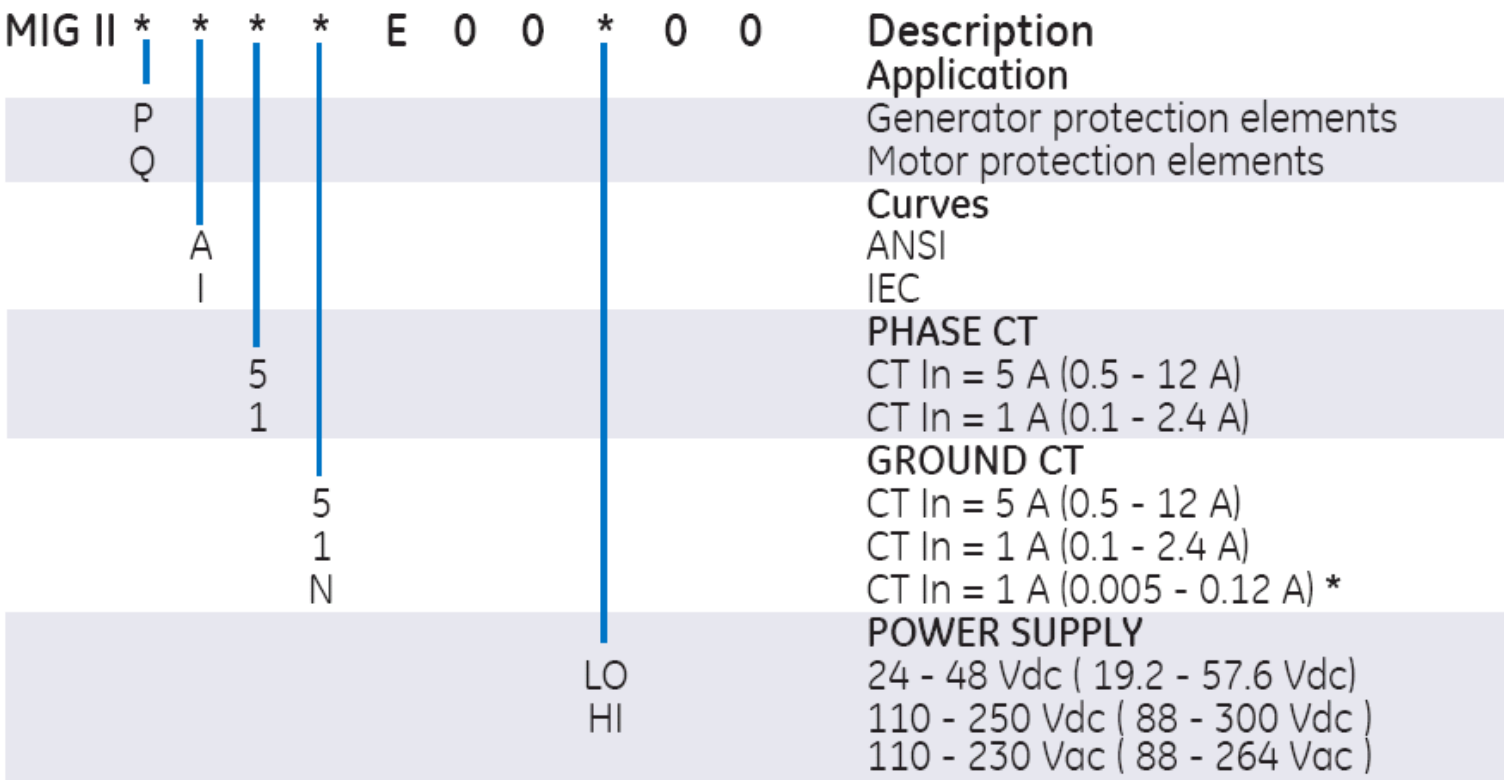

* 87R Does not apply for sensitive ground model