GE VERNOVA

MiCOM P40 Agile

P741, P742, P743

Technical Manual
Busbar Differential Protection Relay

Hardware Version: P (P742) and M (P741, P743)
Firmware Version: 91
Publication Reference: P74x-TM-EN-Pd8.2

Copyright statement

Copyright © 2025 GE Vernova. All rights reserved.

GridBeats, Universal Relay, Multilin, MiCOM, S1 Agile, P40 Agile, DS Agile, EnerVista, CyberSentry, HardFiber, FlexLogic, FlexElement, FlexCurve, FlexAnalog, FlexInteger and FlexState are trademarks or registered trademarks of GE Vernova.

The contents of this manual are the property of GE Vernova. This documentation is furnished on license and may not be reproduced in whole or in part without the permission of GE Vernova. The content of this manual is for informational use only and is subject to change without notice.

Disclaimer

It is the responsibility of the user to verify and validate the suitability of all GE Vernova Grid Automation products. This equipment must be used within its design limits. The proper application including the configuration and setting of this product to suit the power system assets is the responsibility of the user, who is also required to ensure that all local or regional safety guidelines are adhered to. Incorrect application of this product could risk damage to property/the environment, personal injuries or fatalities and shall be the sole responsibility of the person/entity applying and qualifying the product for use.

The content of this document has been developed to provide guidance to properly install, configure and maintain this product for its intended applications. This guidance is not intended to cover every possible contingency that may arise during commissioning, operation, service, or maintenance activities. Should you encounter any circumstances not clearly addressed in this document, contact your local GE Vernova service site.

The information contained in this document is subject to change without notice.

IT IS THE SOLE RESPONSIBILITY OF THE USER TO SECURE THEIR NETWORK AND ASSOCIATED DEVICES AGAINST CYBER SECURITY INTRUSIONS OR ATTACKS. GE VERNOVA AND ITS AFFILIATES ARE NOT LIABLE FOR ANY DAMAGES AND/OR LOSSES ARISING FROM OR RELATED TO SUCH SECURITY INTRUSION OR ATTACKS.

CONTENTS

	Safety Section	P74x-SS-EN-Pd8.2
Section 1	Introduction	P74x-IT-EN-Pd8.2
Section 2	Technical Data	P74x-TD-EN-Pd8.2
Section 3	Getting Started	P74x-GS-EN-Pd8.2
Section 4	Settings	P74x-ST-EN-Pd8.2
Section 5	Operation	P74x-OP-EN-Pd8.2
Section 6	Application Notes	P74x-AP-EN-Pd8.2
Section 7	Programmable Logic	P74x-PL-EN-Pd8.2
Section 8	Measurements and Recording	P74x-MR-EN-Pd8.2
Section 9	Firmware Design	P74x-FD-EN-Pd8.2
Section 10	Commissioning	P74x-CM-EN-Pd8.2
Section 11	Maintenance	P74x-MT-EN-Pd8.2
Section 12	Troubleshooting	P74x-TS-EN-Pd8.2
Section 13	SCADA Communications	P74x-SC-EN-Pd8.2
Section 14	Symbols and Glossary	P74x-SG-EN-Pd8.2
Section 15	Installation	P74x-IN-EN-Pd8.2
Section 16	Cyber Security	P74x-CS-EN-Pd8.2
Appendix A	Ordering Options	
Appendix B	Settings and Signals	
Appendix C	Wiring Diagrams	

SAFETY SECTION

CONTENTS

1.	**OVERVIEW**	**3**
2.	**HEALTH AND SAFETY**	**4**
3.	**SYMBOLS**	**5**
4.	**INSTALLING, COMMISSIONING AND SERVICING**	**6**
4.1	**Lifting Hazards**	**6**
4.2	**Electrical Hazards**	**6**
5.	**DECOMMISSIONING AND DISPOSAL**	**12**
6.	**REGULATORY COMPLIANCE**	**13**
6.1	**EMC Compliance: 2014/30/EU**	**13**
6.2	**LVD Compliance: 2014/35/EU**	**13**
6.3	**R&TTE Compliance: 2014/53/EU**	**13**
6.4	**UL/CUL Compliance**	**13**

1. OVERVIEW

This chapter provides information about the safe handling of the equipment. The equipment must be properly installed and handled to maintain it in a safe condition and to keep personnel safe at all times. You must be familiar with information contained in this chapter before unpacking, installing, commissioning, or servicing the equipment.

2. HEALTH AND SAFETY

Personnel associated with the equipment must be familiar with the contents of this Safety Information.

When electrical equipment is in operation, dangerous voltages are present in certain parts of the equipment. Improper use of the equipment and failure to observe warning notices will endanger personnel.

Only qualified personnel may work on or operate the equipment. Qualified personnel are individuals who are:

- familiar with the installation, commissioning, and operation of the equipment and the system to which it is being connected.
- familiar with accepted safety engineering practises and are authorised to energise and de-energise equipment in the correct manner.
- trained in the care and use of safety apparatus in accordance with safety engineering practises
- trained in emergency procedures (first aid).

The documentation provides instructions for installing, commissioning and operating the equipment. It cannot, however, cover all conceivable circumstances. In the event of questions or problems, do not take any action without proper authorization. Please contact your local sales office and request the necessary information.

3. SYMBOLS

Throughout this manual you will come across the following symbols. You will also see these symbols on parts of the equipment.

Refer to equipment documentation. Failure to do so could result in damage to the equipment

Risk of electric shock

Risk of damage to eyesight

Earth terminal. Note: This symbol may also be used for a protective conductor (earth) terminal if that terminal is part of a terminal block or sub-assembly.

Protective conductor (earth) terminal

Instructions on disposal requirements

The term 'Earth' used in this manual is the direct equivalent of the North American term 'Ground'.

4. INSTALLING, COMMISSIONING AND SERVICING

4.1 Lifting Hazards

Many injuries are caused by:

- Lifting heavy objects
- Lifting things incorrectly
- Pushing or pulling heavy objects
- Using the same muscles repetitively

Plan carefully, identify any possible hazards and determine how best to move the product. Look at other ways of moving the load to avoid manual handling. Use the correct lifting techniques and Personal Protective Equipment (PPE) to reduce the risk of injury.

4.2 Electrical Hazards

All personnel involved in installing, commissioning, or servicing this equipment must be familiar with the correct working procedures.

Consult the equipment documentation before installing, commissioning, or servicing the equipment.

Always use the equipment as specified. Failure to do so will jeopardize the protection provided by the equipment.

Removal of equipment panels or covers may expose hazardous live parts. Do not touch until the electrical power is removed. Take care when there is unlocked access to the rear of the equipment.

Isolate the equipment before working on the terminal strips.

Use a suitable protective barrier for areas with restricted space, where there is a risk of electric shock due to exposed terminals.

Disconnect power before disassembling. Disassembly of the equipment may expose sensitive electronic circuitry. Take suitable precautions against electrostatic voltage discharge (ESD) to avoid damage to the equipment.

NEVER look into optical fibres or optical output connections. Always use optical power meters to determine operation or signal level.

Testing may leave capacitors charged to dangerous voltage levels. Discharge capacitors by reducing test voltages to zero before disconnecting test leads.

Operate the equipment within the specified electrical and environmental limits.

Before cleaning the equipment, ensure that no connections are energized. Use a lint free cloth dampened with clean water.

Contact fingers of test plugs are normally protected by petroleum jelly, which should not be removed.

4.3 UL/CSA/CUL Requirements

The information in this section is applicable only to equipment carrying UL/CSA/CUL markings.

Equipment intended for rack or panel mounting is for use on a flat surface of a Type 1 enclosure, as defined by Underwriters Laboratories (UL).

To maintain compliance with UL and CSA/CUL, install the equipment using UL/CSA-recognized parts for: cables, protective fuses, fuse holders and circuit breakers, insulation crimp terminals, and replacement internal batteries.

4.4 Fusing Requirements

Where UL/CSA listing of the equipment is required for external fuse protection, a UL or CSA Listed fuse must be used for the auxiliary supply. The listed protective fuse type is Class J time delay fuse, with a maximum current rating of 15 A and a minimum DC rating of 250 V dc (for example type AJT15).

Where UL/CSA listing of the equipment is not required, a high rupture capacity (HRC) fuse type with a maximum current rating of 16 Amps and a minimum dc rating of 250 V dc may be used for the auxiliary supply (for example Red Spot type NIT or TIA).
For P50 models, use a 1A maximum T-type fuse.
For P60 models, use a 4A maximum T-type fuse.

Digital input circuits should be protected by a high rupture capacity NIT or TIA fuse with maximum rating of 16 A. for safety reasons, current transformer circuits must never be fused. Other circuits should be appropriately fused to protect the wire used.

CTs must NOT be fused since open circuiting them may produce lethal hazardous voltages

4.5 Equipment Connections

Terminals exposed during installation, commissioning and maintenance may present a hazardous voltage unless the equipment is electrically isolated.

Tighten M4 clamping screws of heavy-duty terminal block connectors to a nominal torque of 1.3 Nm.
Tighten captive screws of terminal blocks to 0.5 Nm minimum and 0.6 Nm maximum.

Always use insulated crimp terminations for voltage and current connections.

Always use the correct crimp terminal and tool according to the wire size.

Watchdog (self-monitoring) contacts are provided to indicate the health of the device on some products. We strongly recommend that you hard wire these contacts into the substation's automation system, for alarm purposes.

4.6 Protection Class 1 Equipment Requirements

Earth the equipment with the supplied PCT (Protective Conductor Terminal).

Do not remove the PCT.

The PCT is sometimes used to terminate cable screens. Always check the PCT's integrity after adding or removing such earth connections.

Use a locknut or similar mechanism to ensure the integrity of stud-connected PCTs.

The recommended minimum PCT wire size is 2.5 mm² for countries whose mains supply is 230 V (e.g. Europe) and 3.3 mm² for countries whose mains supply is 110 V (e.g. North America). This may be superseded by local or country wiring regulations.
For P60 products, the recommended minimum PCT wire size is 6 mm². See product documentation for details.

The PCT connection must have low-inductance and be as short as possible.

All connections to the equipment must have a defined potential. Connections that are pre-wired, but not used, should be earthed, or connected to a common grouped potential.

4.7 Pre-energisation Checklist

Check voltage rating/polarity (rating label/equipment documentation).

Check CT circuit rating (rating label) and integrity of connections.

Check protective fuse or miniature circuit breaker (MCB) rating.

Check integrity of the PCT connection.

Check voltage and current rating of external wiring, ensuring it is appropriate for the application.

4.8 Peripheral Circuitry

Do not open the secondary circuit of a live CT since the high voltage produced may be lethal to personnel and could damage insulation. Short the secondary of the line CT before opening any connections to it.

For most GE Vernova equipment with ring-terminal connections, the threaded terminal block for current transformer termination is automatically shorted if the module is removed. Therefore, external shorting of the CTs may not be required. Check the equipment documentation and wiring diagrams first to see if this applies.

Where external components such as resistors or voltage dependent resistors (VDRs) are used, these may present a risk of electric shock or burns if touched.

Take extreme care when using external test blocks and test plugs such as the MMLG, MMLB and P990, as hazardous voltages may be exposed. Ensure that CT shorting links are in place before removing test plugs, to avoid potentially lethal voltages.

Data communication cables with accessible screens and/or screen conductors, (including optical fibre cables with metallic elements), may create an electric shock hazard in a sub-station environment if both ends of the cable screen are not connected to the same equipotential bonded earthing system.

To reduce the risk of electric shock due to transferred potential hazards:

i. The installation shall include all necessary protection measures to ensure that no fault currents can flow in the connected cable screen conductor.

ii. The connected cable shall have its screen conductor connected to the protective conductor terminal (PCT) of the connected equipment at both ends. This connection may be inherent in the connectors provided on the equipment but, if there is any doubt, this must be confirmed by a continuity test.

iii. The protective conductor terminal (PCT) of each piece of connected equipment shall be connected directly to the same equipotential bonded earthing system.

iv. If, for any reason, both ends of the cable screen are not connected to the same equipotential bonded earth system, precautions must be taken to ensure that such screen connections are made safe before work is done to, or in proximity to, any such cables.

v. No equipment shall be connected to any download or maintenance circuits or connectors of this product except temporarily and for maintenance purposes only.

vi. Equipment temporarily connected to this product for maintenance purposes shall be protectively earthed (if the temporary equipment is required to be protectively earthed), directly to the same equipotential bonded earthing system as the product.

Small Form-factor Pluggable (SFP) modules which provide copper Ethernet connections typically do not provide any additional safety isolation. Copper Ethernet SFP modules must only be used in connector positions intended for this type of connection.

4.9 Upgrading/Servicing

Do not insert or withdraw modules, PCBs or expansion boards from the equipment while energized, as this may result in damage to the equipment. Hazardous live voltages would also be exposed, endangering personnel.

Internal modules and assemblies can be heavy and may have sharp edges. Take care when inserting or removing modules into or out of the IED.

5. DECOMMISSIONING AND DISPOSAL

Before decommissioning, completely isolate the equipment power supplies (both poles of any dc supply). The auxiliary supply input may have capacitors in parallel, which may still be charged. To avoid electric shock, discharge the capacitors using the external terminals before decommissioning.

Avoid incineration or disposal to water courses. Dispose of the equipment in a safe, responsible and environmentally friendly manner, and if applicable, in accordance with country-specific regulations.

6. REGULATORY COMPLIANCE

Compliance with the European Commission Directive on EMC and LVD is demonstrated using a technical file.

6.1 EMC Compliance: 2014/30/EU

The product specific Declaration of Conformity (DoC) lists the relevant harmonised standard(s) or conformity assessment used to demonstrate compliance with the EMC directive.

6.2 LVD Compliance: 2014/35/EU

The product specific Declaration of Conformity (DoC) lists the relevant harmonized standard(s) or conformity assessment used to demonstrate compliance with the LVD directive.

Safety related information, such as the installation I overvoltage category, pollution degree and operating temperature ranges are specified in the Technical Data section of the relevant product documentation and/or on the product labelling.

Unless otherwise stated in the Technical Data section of the relevant product documentation, the equipment is intended for indoor use only. Where the equipment is required for use in an outdoor location, it must be mounted in a specific cabinet or housing to provide the equipment with the appropriate level of protection from the expected outdoor environment.

6.3 R&TTE Compliance: 2014/53/EU

Radio and Telecommunications Terminal Equipment (R&TTE) directive 2014/53/EU.

Conformity is demonstrated by compliance to both the EMC directive and the Low Voltage directive, to zero volts.

6.4 UL/CUL Compliance

If marked with this logo, the product is compliant with the requirements of the Canadian and USA Underwriters Laboratories.

The relevant UL file number and ID are shown on the equipment.

'II' Equipment Group: Industrial.

'(2)G' High protection equipment category, for control of equipment in gas atmospheres in Zone 1 and 2. This equipment (with parentheses marking around the zone number) is not suitable for operation within a potentially explosive atmosphere.

INTRODUCTION

CONTENTS

1.	**FOREWORD**	**3**
1.1	**Target Audience**	**3**
1.2	**Manual Structure**	**3**
1.3	**Compliance**	**4**
2.	**PRODUCT SCOPE**	**5**
2.1	**Ordering Options**	**5**
3.	**FEATURES AND FUNCTIONS**	**6**
3.1	**Protection Functions**	**6**
3.2	**Control Functions**	**6**
3.3	**Measurement Functions**	**6**
3.4	**Communication Functions**	**7**
4.	**FUNCTIONAL OVERVIEW**	**8**

FIGURES

Figure 1: Functional Overview 8

1. FOREWORD

This technical manual provides a functional and technical description of GE's P74x, as well as a comprehensive set of instructions for using the device. The level at which this manual is written assumes that you are already familiar with protection engineering and have experience in this discipline.

The description of principles and theory is limited to that which is necessary to understand the product. For further details on general protection engineering theory, we refer you to GE Vernova's publication NPAG, which is available online or from our contact centre at GAsupport@gevernova.com

We have attempted to make this manual as accurate, comprehensive and user-friendly as possible. However, we cannot guarantee that it is free from errors. Nor can we state that it cannot be improved. We would therefore be very pleased to hear from you if you discover any errors or have any suggestions for improvement. Our policy is to provide the information necessary to help you safely specify, engineer, install, commission, maintain, and eventually dispose of this product. We consider that this manual provides the necessary information, but if you consider that more details are needed, please contact us.

All feedback should be sent to our contact centre at GAsupport@gevernova.com.

1.1 Target Audience

This manual is aimed at all professionals charged with installing, commissioning, maintaining, troubleshooting, or operating any of the products within the specified product range. This includes installation and commissioning personnel as well as engineers who will be responsible for operating the product.

The level at which this manual is written assumes that installation and commissioning engineers have knowledge of handling electronic equipment. Also, system and protection engineers have a thorough knowledge of protection systems and associated equipment.

1.2 Manual Structure

The manual consists of the following chapters:

- Chapter 1: Introduction
- Chapter 2: Technical Data
- Chapter 3: Getting Started
- Chapter 4: Settings
- Chapter 5: Operation
- Chapter 6: Application Notes
- Chapter 7: Programmable Logic
- Chapter 8: Measurements and Recording
- Chapter 9: Firmware Design
- Chapter 10: Commissioning
- Chapter 11: Maintenance
- Chapter 12: Troubleshooting
- Chapter 13: SCADA Communications
- Chapter 14: Symbols and Glossary
- Chapter 15: Installation
- Chapter 16: Cyber Security
- Chapter 17: Version History

- Appendix A: Ordering Options
- Appendix B: Wiring Diagrams

1.3 Compliance

The device has undergone a range of extensive testing and certification processes to ensure and prove compatibility with all target markets. A detailed description of these criteria can be found in the Technical Data chapter.

2. PRODUCT SCOPE

The P74x differential busbar protection relays have been designed for the protection of a wide range of substation busbars from distribution to transmission voltage levels. The relays include a comprehensive range of non-protection features to aid system diagnosis and fault analysis. The device offers integral biased differential busbar, breaker failure, dead zone, overcurrent and earth-fault protection and is suitable for application on solidly grounded, impedance grounded, Petersen coil grounded and isolated systems. The relays are especially suitable where a complete scheme solution is required.

The P74x is available in three models:

- P741 (Central Unit)
- P742 (Peripheral Unit)
- P743 (Peripheral Unit)

This together with the topology configuration software and the dynamic synoptic monitoring tool, allows full flexibility for all configurations.

The difference in model variants is summarized below:

Feature/Variant	P741	P742	P743
Case	80TE	40TE	60TE
Digital inputs	8	8/16	16/24
Output relays	8	8/12	12/16/20
Virtual Digital inputs (via fibre communication)	16	16	16
Virtual Output relays (via fibre communication)	16	16	16
High speed high break output contacts		4	4/8
Programmable LEDs	18		18
Function keys	10		10

2.1 Ordering Options

All current models and variants for this product are defined in an interactive spreadsheet called the CORTEC. This is available on the company website.

Alternatively, you can obtain it via the contact centre at GAsupport@gevernova.com.

A copy of the CORTEC is also supplied as a static table in the Appendices of this document. However, it should only be used for guidance as it provides a snapshot of the interactive data taken at the time of publication.

3. FEATURES AND FUNCTIONS

3.1 Protection Functions

ANSI	IEC 61850	Function	P741	P742	P743
87BB/P	PhsPDIF	Phase segregated biased current differential high speed and delayed busbar protection	•	-	-
87CZ/P	CzPPDIF	Check Zone segregated biased phase current differential high speed and delayed busbar protection	•	-	-
87BB/N	NeuPDIF	Sensitive earth fault bias current controlled busbar protection	•	-	-
87 CZ/ N	CzNPDIF	Check Zone segregated biased earth current controlled busbar protection	•	-	-
50/51/P	OcpPTOC	Phase overcurrent protection (2 stages)	-	•	•
50/51/N	EfmPTOC	Earth overcurrent protection (2 stages)	-	•	•
50ST/P	DzpPhsPTOC	Dead zone phase protection (short zone between CTs and open CBs)	-	•	•
50ST/N	DzpEfmPTOC	Dead zone earth protection (short zone between CTs and open CBs)	-	•	•
50BF	RBRF	Breaker failure protection (LBB)	•	•	•
ISL		Isolator discrepancy alarm	-	•	•
		Fibre optic signalling channel	•	•	•

3.2 Control Functions

Feature	IEC 61850	ANSI
Watchdog contacts		
Read-only mode		
Function keys	FnkGGIO	
Programmable LEDs	LedGGIO	
Programmable hotkeys		
Programmable allocation of digital inputs and outputs		
Fully customizable menu texts		
Circuit breaker control, status & condition monitoring	XCBR	52
CT supervision		
VT supervision		
Trip circuit and coil supervision		
Control inputs	PloGGIO1	
Power-up diagnostics and continuous self-monitoring		
Dual rated 1A and 5A CT inputs		
Alternative setting groups (4)		
Graphical programmable scheme logic (PSL)		
Fault locator	RFLO	

3.3 Measurement Functions

Measurement Function	IEC 61850	ANSI
Measurement of all instantaneous & integrated values (Exact range of measurements depend on the device model)		MET
Disturbance recorder for waveform capture - specified in samples per cycle	RDRE	DFR
Fault Records		
Maintenance Records		
Event Records/Event logging		Event records
Time Stamping of Opto-inputs	Yes	Yes

3.4 Communication Functions

Feature	ANSI
NERC compliant cyber-security	
USB port for configuration	16S
Rear serial RS485 communication port for SCADA control	16S
2nd Additional rear serial communication ports for SCADA control and teleprotection (fibre and copper) (optional)	16S
Ethernet communication (optional)	16E
Redundant Ethernet communication (optional)	16E
Courier protocol	16S
IEC 61850 protocol (optional)	16E
IEC 60870-5-103 protocol (optional)	16S
SNMP	16E
IRIG-B time synchronisation (optional)	CLK
IEEE 1588 PTP (Edition 2 devices only)	

4. FUNCTIONAL OVERVIEW

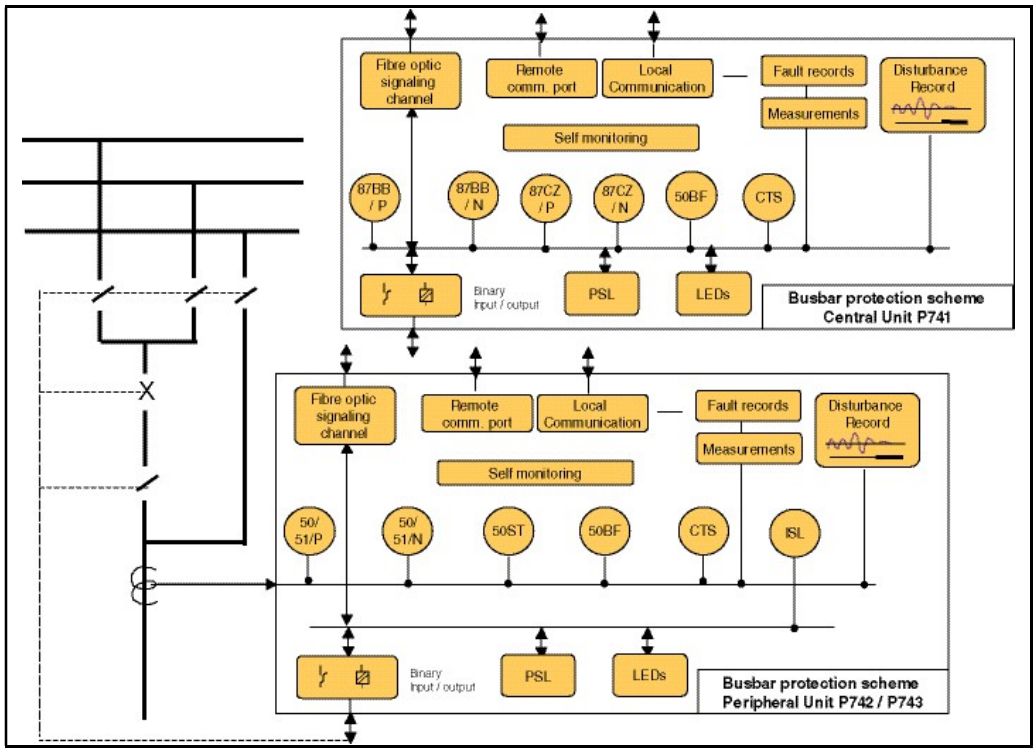

Figure 1: Functional overview

TECHNICAL DATA

Technical Data

Mechanical Specification

Design

Modular Px40 platform relay:
P741: Size 16“ case (80TE)
P742: Size 8“ case (40TE)
P743: Size 12“ case (60TE)
Mounting is front of panel flush mounting.

Enclosure Protection

P741

Protection against dust and dripping water (front face)
IP52 as per IEC 60529:1989/A2:2013
Protection (whole case)
IP20 as per IEC 60529:1989/A2:2013
Protection against dust (sides and rear of case)
IP50 as per IEC 60529:1989/A2:2013
Protection for sides of the case (safety)
IP30 as per IEC 60529:1989/A2:2013
Protection for rear of the case (safety)
IP10 as per IEC 60529:1989/A2:2013

P742/3

Protection against dust and dripping water (front face)
IP52 as per IEC 60529:1989/A2:2013
Protection against dust (whole case)
IP50 as per IEC 60529:1989/A2:2013
Protection for sides of the case (safety)
IP30 as per IEC 60529:1989/A2:2013
Protection for rear of the case (safety)
IP10 as per IEC 60529:1989/A2:2013

Weight

P741	with 7 comm. boards	7.4 kg
	with 1 comm. board	6.2 kg
P742		7.5 kg
P743		9.2 kg

Terminals

AC Current and Voltage Measuring Inputs

P742 and P743 only
Located on heavy duty (black) terminal block:
Threaded M4 terminals, for ring lug connection.
CT inputs have integral safety shorting, upon removal of the terminal block.

General Input/Output Terminals

For power supply, opto inputs, output contacts and COM1 rear communications.
Located on general purpose (grey) blocks:
Threaded M4 terminals, for ring lug connection.

Case Protective Earth Connection

Two rear stud connections (2 P741, 1 P742/3), threaded M4.
Must be earthed (grounded) using the protective (earth) conductor for safety, minimum wire size 2.5mm2.

Front USB Port
EIA(RS)232 DCE, USB type B
Courier protocol for interface to MiCOM S1 Agile software.
Isolation to ELV (extra low voltage) level.
Maximum cable length 15 m.

Rear Communications Port
K-Bus/EIA (RS)485 signal levels, two wire
Connections located on general purpose block, M4 screw.
For screened twisted pair cable, multidrop, 1000 m max.
Courier protocol
SELV* rated circuit

Optional Second Rear Communication Port
EIA(RS)232, 9 pin D-type female connector, socket SK4.
Courier protocol: K-Bus, EIA(RS)232, or EIA(RS)485 connection.
Maximum cable run length: 15m.

Optional Rear EIA(RS)232 InterMiCOM Port
For “MODEM” InterMiCOM teleprotection schemes.
EIA(RS)232, 9 pin D-type female connector, socket SK5.
Isolation to SELV* level.
Maximum cable run length to MODEM 15m.

Optional Rear IRIG-B Interface Modulated or Un-modulated

P741 only
(P742 & P743 synchronized by the P741)
BNC socket
SELV* rated circuit
50 ohm coaxial cable.

*: PEB = Protective equipotential bonded
*: SELV = Safety/Separated extra low voltage
Both PEB and SELV circuits are safe to touch after a single fault condition.

Optical Fiber Connection

BFOC 2.5 (ST®) interface for multi-mode glass fibre type 62.5/125 μm, as per IEC 874-10, 850 nm short-haul fibres, one Tx and one Rx.
Optical budget: 5.6 dB
Data rate:2.5 Mbits
Max Length: 1000 m

Optional Rear Ethernet Connection for IEC 61850 100BaseTX Communications

Interface in accordance with IEEE802.3 and IEC 61850
Isolation: 1.5kV
Connector type: RJ45
Cable type: Screened Twisted Pair (STP)
Max. cable length: 100m

100 Base FX Interface

Interface in accordance with IEEE802.3 and IEC 61850
Wavelength: 1300nm
Fiber: multi-mode 50/125µm or 62.5/125µm
Connector style: BFOC 2.5 -(ST®)

Optional Rear Redundant Ethernet Connection for IEC 61850

100 Base FX Interface

Interface in accordance with IEEE802.3 and IEC 61850
Wavelength: 1300nm
Fiber: multi-mode 50/125µm or 62.5/125µm
Connector style: BFOC 2.5 -(ST®)
Transmitter optical characteristics 100 base FX interface

Rear Ethernet Port Fibre

(Hardware option R/S/T)

Rear Ethernet Port using Fibre-optic Cabling	
Main Use	Substation Ethernet Communications
Connector	IEC 874-10 BFOC 2.5 –(ST®) (1 each for Tx and Rx)
Standard	IEEE 802.3 100 BaseFX
Fibre Type	Multimode 50/125 µm or 62.5/125 µm
Supported Protocols	IEC 61850
Optional Redundancy Protocols Supported	PRP (Parallel Redundancy Protocol) HSR (High-availability Seamless Redundancy) RSTP (Rapid Spanning Tree Protocol) Failover
Wavelength	1300 nm

Receiver Optical Characteristics

100 base FX Interface
(TA = 0°C to 70°C)

Parameter	Sym	Min.	Typ.	Max.	Unit
Input Optical Power Minimum at Window Edge	PIN Min. (W)		–33.5	–31	dBm avg.
Input Optical Power Minimum at Eye Center	PIN Min. (C)		–34.5	–31.8	dBm avg.
Input Optical Power Maximum	PIN Max.	–14	–11.8		dBm avg.

Transmitter Optical Characteristics

100 Base FX Interface
(TA = 0°C to 70°C)

Parameter	Sym	Min.	Typ.	Max	Unit
Output Optical Power BOL: 62.5/125 µm, NA = 0.275 Fiber EOL	PO	–19 –20	–16.8	–14	dBm avg.
Output Optical Power BOL: 50/125 µm, NA = 0.20 Fiber EOL	PO	–22.5 –23.5	–20.3	–14	dBm avg.
Optical Extinction Ratio				10 –10	% dB
Output Optical Power at Logic “0” State	PO			–45	dBm avg.

BOL - Beginning of life
EOL - End of life

Rear Ethernet Port Fibre

(Hardware option U/W/Y)

Rear Ethernet Port using Fibre-optic Cabling	
Main Use	Substation Ethernet Communications
Connector	IEC 874-10 BFOC 2.5 - (LC®) (1 each for Tx and Rx)
Standard	IEEE 802.3 100 BaseFX
Fibre Type	Multimode 50/125 µm (OM2 or OM3) or 62.5/125 µm (OM1)
Supported Protocols	Courier (tunnelled), IEC 61850, PTP, SNTP, SNMP, RADIUS, syslog
Redundancy Protocols Supported	PRP (Parallel Redundancy Protocol) HSR (High-availability Seamless Redundancy) RSTP (Rapid Spanning Tree Protocol) Failover
Wavelength	1310 nm

Receiver Optical Characteristics

100 base FX Interface
(TA = 0°C to 70°C)

Parameter	Sym	Min.	Typ.	Max.	Unit
Input Optical Power Minimum at Window Edge	PIN Min. (W)	-31.0		-12.0	dBm avg.
Input Optical Power Minimum at Eye Center	PIN Min. (C)		–34.5	–31.8	dBm avg.
Input Optical Power Maximum	PIN Max.	–14	–11.8		dBm avg.

Transmitter Optical Characteristics

100 Base FX Interface
(TA = 0°C to 70°C)

Parameter	Sym	Min.	Typ.	Max	Unit
Output Optical Power BOL: 62.5/125 µm, NA = 0.275 Fiber EOL	PO	–20	–17.0	–14.0	dBm avg.
Output Optical Power BOL: 50/125 µm, NA = 0.20 Fiber EOL	PO	–24.0	–21.0	–17.0	dBm avg.
Optical Extinction Ratio	ER	10			dB
Output Optical Power at Logic “0” State	$P_{O(off)}$			–45	dBm avg.

Fiber Defect Connector (Watchdog Relay) - Redundant Ethernet Board

Connector (3 terminals): 2NC contacts
Rated voltage: 250 V
Continuous current: 5 A
Short duration current: 30 A for 3 s

Breaking Capacity

DC: 50 W resistive
DC: 25 W resistive
AC: 1500 VA resistive (cos ϕ = unity)
AC: 1500 VA inductive (cos ϕ = unity)
Subject to maxima of 5 A and 250 V

Ratings

AC Measuring Inputs

Nominal frequency: 50 and 60 Hz (settable)
Operating range: 45 to 65 Hz
Phase rotation: ABC or ACB

AC Current

Nominal current (In): 1 and 5 A dual rated.
(1A and 5A inputs use different transformer tap connections, check correct terminals are wired).
Nominal burden per phase
1 A: <0.04VA at rated current
Impedance per phase
1 A: <40mΩ over 0 - 30In
Nominal burden per phase
5 A: <0.15VA at rated current
Impedance per phase
5 A: <8mΩ over 0 - 30In
Thermal withstand:
continuous 4 In
for 10 s: 30 In
for 1 s; 100 In
Linear to 64 In (non-offset AC current).

AC Voltage

Version: 100 V to 120 V (ph-ph)
Nominal burden per VT input *1:
< 0.003 VA @ Vn (ph-n); Vn < 120/Ö3 V (ph-n)
< 0.01 VA @ Vn (ph-n); Vn < 240/Ö3 V (ph-n)
Linearity for each VT input:
Linear up to 200 Vac rms
Continuous rating for each VT input:
240 Vac rms
10 seconds rating for each VT input:
312 Vac rms

Version: 380 V to 480 V (ph-ph)
Nominal burden per VT input *1:
< 0.02 VA @ Vn (ph-n); Vn < 440/3Ö V (ph-n)
< 0.07 VA @ Vn (ph-n); Vn < 880/3Ö V (ph-n)
Linearity for each VT input:
Linear up to 800 Vac rms
Continuous rating for each VT input:
880 Vac rms
10 seconds rating for each VT input:
1144 Vac rms

Note: Reference conditions:
*1 = Overfrequency operating range 50/60 Hz and over temperature range 20° +/- 5° C.

Power Supply

Auxiliary Voltage (Vx)

Three ordering options:
(i) Vx: 24 to 48 Vdc
(ii) Vx: 48 to 110 Vdc, and 40 to 100 Vac (rms.)
(iii) Vx: 110 to 250 Vdc, and 100 to 240 Vac (rms.).

Operating Range

(i) 19 to 65 V (dc only for this variant)
(ii) 37 to 150 V(dc), 32 to 110 V (ac)
(iii) 87 to 300 V(dc), 80 to 265 V (ac).
With a tolerable ac ripple of up to 15% for a dc supply, per IEC 60255-26:2013.

Nominal Burden

Quiescent burden:
P741: 37 to 41 W or 74 to 82 VA
P742: 16 to 23 W or 32 to 46 VA
P743: 22 to 32 W or 44 to 64 VA
Additions for energised binary inputs/outputs:
Per opto input:
0.09 W or 0.18 VA max …(24 to 54 V),
0.12 W or 0.24 VA max…(110/125 V),
0.19 W or 0.38 max…(220/250 V).
Per energised output relay: 0.13 W or 0.26 VA
Per energised high break output relay: * 0.73W or 1.46 VA

Power-up Time

Time to power up < 30 s.

Power Supply Interruption

IEC 60255-26: 2013
The relay will withstand a 20 ms interruption in the DC auxiliary supply, without de-energising.
Per IEC 61000-4-11: 2004
The relay will withstand a 20 ms interruption in an AC auxiliary supply, without de-energising.

Note: The use of a E124 extends these limits.

Supercapacitor

Discharge time >14 days

Field Voltage Output

Regulated 48 Vdc
Current limited at 112 mA maximum output

Digital ("Opto") Inputs

Universal opto inputs with programmable voltage thresholds. May be energised from the 48 V field voltage, or the external battery supply.
Rated nominal voltage: 24 to 250 Vdc
Operating range: 19 to 265 Vdc
Withstand: 300 Vdc.
Nominal pick-up and reset thresholds:
Pick-up: approx. 70 % of battery nominal set,
Reset: approx. 66 % of battery nominal set.
Recognition time: 7 ms

Output Contacts

Standard Contacts

General purpose relay outputs for signalling, tripping and alarming:

Rated voltage:	300V
Continuous current:	10A
Short-duration current:	30A for 3s
Making capacity:	250A for 30 ms

Breaking capacity:
DC: 50W resistive
DC: 62.5W inductive (L/R = 50 ms)
AC: 2500VA resistive (cos ϕ = unity)
AC: 2500VA inductive (cos ϕ = 0.7)
Response to command: < 5 ms
Durability:
Loaded contact: 10 000 operations minimum,
Unloaded contact: 100 000 operations minimum.

Fast Operation and High Break Contacts

Dedicated purpose relay outputs for tripping:
Uses IGBT technology

Make and Carry:	30 Amps for 3 sec, 30A @ 250V resistive
Carry:	250 Amps dc for 30 ms
Continuous Carry:	10 Amps dc

Break Capacity:
– 10A @ 250V resistive (10,000 operations)
– 10A @ 250V L/R=40 ms

Operating time:

<200µs
& Reset time: 7.5 ms

Watchdog Contacts

Non-programmable contacts for relay healthy/relay fail indication:
Breaking capacity:
DC: 30 W resistive
DC: 15 W inductive (L/R = 40 ms)
AC: 375 VA inductive (cos ϕ = 0.7)

IRIG-B 12X Interface (Modulated)

External clock synchronization per IRIG standard 200-98, format B12X.
Input impedance 6kΩ at 1000Hz
Modulation ratio: 3:1 to 6:1
Input signal, peak-peak: 200mV to 20V

IRIG-B 00X Interface (Un-modulated)

External clock synchronization per IRIG standard 200-98, format B00X.
Input signal TTL level
Input impedance at dc 10kΩ

Environmental Conditions

Ambient Temperature Range

Ambient temperature range
Operating temperature range:
–25°C to +55°C
(or –13°F to +131°F)
Storage and transit:
–25°C to +70°C
(or –13°F to +158°F)

Tested as per
IEC 60068-2-1: 2007:

storage (96 hours)	–25°C (–13°F)
operation (96 hours)	–40°C (–40°F)

IEC 60068-2-2: 2007:

storage (96 hours)	+85°C (+185°F)
operation (96 hours)	+70°C (+158°F)

Ambient Humidity Range

Per IEC 60068-2-78: 2013:
56 days at 93 % relative humidity and +40 °C
Per IEC 60068-2-30: 2005:
Damp heat cyclic, six (12 + 12) hour cycles, 93 % RH, +25 to +55 °C

Corrosive Environments

Compliance, Industrial corrosive environment/poor environmental control
IEC 60068-2-42: 2003
IEC 60068-2-43: 2003
IEC 60068-2-52: 1996
IEC 60068-2-52: 1996
Sulphur Dioxide - IEC 60068-2-42: 2003
21 days exposure to elevated concentrations (25ppm) of SO_2 at 75% relative humidity and +25°C
Hydrogen Sulphide - IEC 60068-2-43: 2003
21 days exposure to elevated concentrations (10ppm) of H_2S at 75% relative humidity and +25°C
Salt mist - IEC 60068-2-52: 1996
7 days, KB severity 3

Type Tests

Insulation

Per IEC 60255-27: 2013

Insulation resistance > 100 MΩ at 500 Vdc (Using only electronic/brushless insulation tester).

Creepage Distances and Clearances

Per IEC 60255-27: 2013

Pollution degree 3,
Overvoltage category III,
Impulse test voltage 5 kV.

High Voltage (Dielectric) Withstand

(EIA RS232 ports excepted).

(i) Per IEC 60255-27:2013, 2 kV rms. AC, 1 min.
Between all case terminals connected together, and the case earth.
Also, between all terminals of independent circuits.
1 kV rms. AC for 1 minute, across open watchdog contacts.
1 kV rms. AC for 1 minute, across open contacts of changeover output relays.

(ii) Per ANSI/IEEE C37.90-2005 (reaffirmed 1994):
1.5 kV rms. AC for 1 minute, across open contacts of changeover output relays.

Impulse Voltage Withstand Test

Per IEC 60255-27: 2013

Front time: 1.2 µs,
Time to half-value: 50 µs,
Peak value: 5 kV, 0.5 J

Between all terminals, and all terminals and case earth.

Electromagnetic Compatibility (EMC)

1 MHz Burst High Frequency Disturbance Test

Per IEC 60255-22-1: 2008, Class III, IEC 60255-26:2013

Common-mode test voltage: 2.5 kV,
Differential test voltage: 1.0 kV,

Test duration: 2 s, Source impedance: 200 Ω (EIA RS232 ports excepted).

Immunity to Electrostatic Discharge

Per IEC 60255-26:2013, Class 4,

15 kV discharge in air to user interface, display, and exposed metalwork.

Per IEC 61000-4-2:2009, Class 3,

8 kV discharge in air to all communication ports.
6 kV point contact discharge to any part of the front of the product.

Electrical Fast Transient or Burst Requirements

Per IEC 60255-26:2013, IEC 61000-4-4:2012.
Test severity Class III and IV:

Amplitude: 2 kV, burst frequency 5 kHz (Class III),
Amplitude: 4 kV, burst frequency 2.5 kHz (Class IV).

Applied directly to auxiliary supply and applied to all other inputs. (EIA RS232 ports excepted).

Surge Immunity Test

(EIA RS232 ports excepted).
Per IEC 60255-26:2013, IEC 61000-4-5:2014+AMD1:2017,

Time to half-value: 1.2/50 µs,
Amplitude: 2 kV between all groups and case earth,
Amplitude: 1 kV between terminals of each group.

Immunity to Radiated Electromagnetic Energy

Per IEC 60255-26:2013, IEC 61000-4-3:2006 + A2:2010
Test field strength, frequency band 80 to 1000 MHz: 10 V/m,
Test using AM: 1kHz/80%,
Spot tests at 80, 160, 450, 900 MHz
Per IEEE/ANSI C37.90.2: 2004:

25 MHz to 1000 MHz, zero and 100% square wave modulated.

Field strength of 35 V/m.

Radiated Immunity from Digital Communications

Per IEC 61000-4-3:2006 + A2:2010:

Test field strength, frequency band 800 to 960 MHz, and 1.4 to 2.0 GHz:
30 V/m,
Test using AM: 1 kHz/80%.

Radiated Immunity from Digital Radio Telephones

Per IEC 60255-26:2013, IEC 61000-4-3:2006 + A2:2010

10 V/m, 900 MHz and 1.89 GHz.

Immunity to Conducted Disturbances Induced by Radio Frequency Fields

IEC 60255-26:2013, IEC 61000-4-6:2013
Level 3

Disturbing test voltage: 10 V

Magnetic Field Immunity

Per IEC 61000-4-8:2009, Level 5,
100 A/m applied continuously,
1000 A/m applied for 3 s.
Per IEC 61000-4-9:2016, Level 5,
1000 A/m applied in all planes.
Per IEC 61000-4-10:2016, Level 5,
100 A/m applied in all planes at 100 kHz/1 MHz with a burst duration of 2 s.

Conducted Emissions

Per IEC 60255-26:2013, EN55022: 2010
0.15 – 0.5 MHz, 79 dBμV (quasi peak) 66 dBμV (average)
0.5 – 30 MHz, 73 dBμV (quasi peak) 60 dBμV (average).

Radiated Emissions

Per IEC 60255-26:2013
30 - 230 MHz, 40 dBμV/m at 10 m measurement distance
230 MHz - 1 GHz, 47 dBμV/m at 10 m measurement distance.

EU Directives

EMC Compliance

Per 2014/30/EU:
Compliance to the European Commission Directive on EMC is claimed via the Technical Construction File route. Product Specific Standards were used to establish conformity:
IEC 60255-26:2013

Product Safety

Per 2014/35/EU:
Compliance with European Commission Low Voltage Directive. Compliance is demonstrated by reference to generic safety standards:
IEC 60255-27:2005

Mechanical Robustness

Vibration Test

Per EN 60255-21-1:1998
Response Class 2
Endurance Class 2

Shock and Bump

Per EN 60255-21-2:1988
Shock response Class 2
Shock withstand Class 1
Bump Class 1

Seismic Test

Per EN 60255-21-3: 1993 Class 2

Timings and Accuracy

All quoted operating times include the closure of the trip output contact.

Performance Data

Busbar Protection

Busbar Fault Accuracy

Pick-up: Setting ± 5% or 20 A up to 8 Pus, or 50 A from 8 Pus, Whichever Is Greater (WIG)
Drop-off: >0.95 x Setting or 20 A up to 8 Pus, or 50 A from 8 Pus, WIG
Busbar trip:11 ms (min) & 13 ms (typical) at 1.4 x tripping threshold at 50Hz and at 1.7 x tripping threshold at 60Hz

Circuitry Fault Accuracy

Pick-up: Setting ± 5% or 20 A up to 8 Pus, or 50 A from 8 Pus, Whichever Is Greater (WIG)
Drop-off: >0.95 x Setting or 20 A up to 8 Pus, or 50 A from 8 Pus, WIG
DT operation: ±5 % or 40 ms WIG

Dead Zone Protection

Accuracy

Pick-up: Setting ± 5% or 10 mA Whichever Is Greater (WIG)
Drop-off: >0.95 x Setting or 10 mA WIG
Min. trip level: 1.05 x Setting ± 5% or 10 mA WIG
DT operation: ±5 % or 20 ms WIG

Three Phase Overcurrent Protection

Accuracy

Pick-up: Setting ±5 % or 10 mA Whichever Is Greater (WIG)
Drop-off: 0.95 x Setting ±5 % or 10 mA WIG
Min. trip level of IDMT elements:
1.05 x Setting ±5 % or 10 mA WIG
IDMT shape: ±5 % or 40 ms WIG (under reference conditions)*
IEEE reset: ±5 % or 40 ms WIG
DT operation: ±5 % or 50 ms WIG
DT reset: Setting ±5 % or 20 ms WIG
Characteristic
UK curves: IEC 60255-3 …1998
US curves: IEEE C37.112 …1996

Earth Fault Protection

Accuracy

Pick-up: Setting ± 5% or 10 mA Whichever Is Greater (WIG)
Drop-off: >0.95 x Setting or 10 mA WIG
Min. trip level of IDMT elements: 1.05 x Setting ± 5% or 10 mA WIG
IDMT characteristic shape: ± 5 % or 40 ms WIG (under reference conditions)*
IEEE reset: ±10 % or 40 ms WIG
DT operation: ±5 % or 50 ms WIG
DT reset: ± 5% or 50 ms WIG

Transient Overreach and Overshoot

Accuracy

Additional tolerance due to increasing X/R ratios: ± 5% over the X/R ratio of 1 to 90
Overshoot of overcurrent elements: < 40 ms

Programmable Scheme Logic

Accuracy

Output conditioner timer:
Setting ±2 % or 50 ms whichever is greater
Dwell conditioner timer:
Setting ±2 % or 50 ms whichever is greater
Pulse conditioner timer:
Setting ±2 % or 50 ms whichever is greater

IRIG-B and Real Time Clock

Modulated IRIG-B:

Modulation ratio: 1/3 or 1/6
Input signal peak-peak amplitude:
200 mV to 20 V
Input impedance at 1000Hz: 6000 Ω
External clock synchronization:
Conforms to IRIG standard 200-98, format B

Un-modulated IRIG-B:

Input signal TTL level
Input impedance at dc 10kΩ
External clock synchronization per IRIG standard 200-98, format B00X.

Performance Accuracy (for Modulated and Un-modulated Versions)

Real time clock accuracy: < ±2 seconds/day

Measurements

Accuracy

Phase current: ±1.0 % of Reading or ±1.0% CT Ratio (RorCTR)
Phase local current: ±1.0 % of RorCTR or ±(f-fn)/fn %
Phase remote current: ±1.0 % of RorCTR or ±(f-fn)/fn %
Phase differential current: ±5.0 %
Bias current: ±5.0 %
Frequency: ±1 %

Disturbance Records

Accuracy

Waveshape : Comparable with applied quantities
Magnitude and relative phases: ±5 % of applied quantities
Duration: ±2 %
Trigger position: ±2 % (minimum trigger 100 ms)

IEC 61850 Ethernet Data

100 Base TX Communications

Interface in accordance with IEEE802.3 and IEC61850
Isolation 1.5kV
Cable type: Screened twisted pair STP
Max length: 100m

100 Base FX Interface

Interface in accordance with IEEE802.3 and IEC61850
Wavelength: 1300nm
Fibre: multi-mode 50/125µm or 62.5/125µm
Connector style: ST

Transmitter Optical Characteristics

(TA = 0°C to 70°C, VCC = 4.75 V to 5.25 V)

Parameter	Sym	Min.	Typ.	Max	Unit
Output Optical Power BOL: 62.5/125 µm, NA = 0.275 Fiber EOL	P_{OUT}	–19 –20	–16.8	–14	dBm avg.
Output Optical Power BOL: 50/125 µm, NA = 0.20 Fiber EOL	P_{OUT}	–22.5 –23.5	–20.3	–14	dBm avg.
Optical Extinction Ratio				10 –10	% dB
Output Optical Power at Logic "0" State	P_{OUT} ("0")			–45	dBm avg.

BOL - Beginning of life
EOL - End of life

Receiver Optical Characteristics

(T_A = 0°C to 70°C, V_{CC} = 4.75 V to 5.25 V)

Parameter	Sym	Min.	Typ.	Max.	Unit
Input Optical Power Minimum at Window Edge	P_{IN} Min. (W)		–33.5	–31	dBm avg.
Input Optical Power Minimum at Eye Center	P_{IN} Min. (C)		–34.5	–31.8	dBm avg.
Input Optical Power Maximum	P_{IN} Max.	–14	–11.8		dBm avg.

Note: The 10BaseFL connection will no longer be supported as IEC 61850 does not specify this interface

Reference Conditions

Ambient temperature: 20 °C

Frequency Tracking Range

45 to 65 Hz

Breaker Failure

Accuracy
Reset time
= 25 ms from:
start to [(TBF2 or TBF4) - 30 ms]
= 15 ms from:
[(TBF2 or TBF4) - 30 ms] to [TBF2 or TBF4]
±2 % or 10 ms whichever is greater
Thresholds: settings ±5 % or 10 mA Whichever Is Greater

Protection Functions

Global Settings (System Data)

Language: English/French/German/Spanish
Frequency: 50/60 Hz

Common Conventional Ratios (CU)

Primary basis current (virtual)
Ibp: 1000A

Current Transformers (PU)

Phase CT Primary: 1…30.000A (step 1A)
Phase CT Secondary In: 1A or 5A

Phase Fault Elements (CU)

Phase current slope adjustment
k2: 0.20…0.90 (step 0.1)
Phase differential current threshold
ID>2: 50A…30kA (step 10A)
Check Zone slope adjustment
kCZ:0.00…0.90 (step 0.01)
Check Zone differential current threshold
IDCZ >2: 50A…30kA (step 10A)
Circuitry fault slope adjustment
ID>1: 10…500A (step 10A)
Circuitry fault threshold
k1: 0.00…0.50 (step 0.01)
Circuitry fault alarm timer
ID>1 tCF: 0.1…600.0s (step 0.1s)

Sensitive Earth Fault

Option for high neutral impedance:
Disabled/Enabled
Threshold for sensitive Earth fault with flowing current control:
IbiasPh>Cur.: 50A…30kA (step 10A)
Residual current slope adjustment
kN2: 0.00…0.90 (step 0.01)
Residual differential current threshold:
IDN>2: 10A…30kA (step 10A)
Residual Check Zone current slope adjustment
kNCZ: 0.00…0.90 (step 0.01)
Residual Check Zone differential current threshold:
IDNCZ>2: 10A…30kA (step 10A)
Circuitry fault slope adjustment
kN1: 0.00…0.50 (step 0.01)
Circuitry fault threshold:
IDN>1: 10…500A (step 10A)
Circuitry fault alarm timer
IDN>1 tCF: 0.1…600.0s (step 0.1s)

Current Transformer and Feeder Characteristics

Class: 5P (IEC185)
X (BS3958)
TPX (IEC 44-6)
TPY (IEC 44-6)
TPZ (IEC 44-6)
Min. Knee point voltage (BS 3958):
Vk: 100/I_n V…5k/I_n V (step 10/I_n V)
Rated Burden (IEC 44-6):
S: 5VA…100VA (step 1VA)
Rated Resistive Burden (IEC 44-6):
5…100/I_n^2 Ω (step 1/I_n^2 Ω)
rRB: data calculated from rated burden
Rated short-circuit current factor:
Kscc: 10…50 (step 5)
Secondary resistance (Ω)
R_{CT}: 0.1…50.0 Ω (step 0.1Ω)
External loop resistance Eff. Burden (Ω):
RB: 0.1…200.0/ I_n^2 Ω (step 1/ I_n^2 Ω)
External loop resistance Eff. Burden VA
(Data calculated from Eff. Burden Ohm)
Blocking of 87BB on phase-phase feeder fault for external ph-ph fault detection - (>1.5 max ph-ph fault current infeed) with Ultra high speed detection <1 ms:
I>BB: 0.05…4×I_n (step 0.01×I_n)
Blocking of 87BB on earth/feeder fault (external earth fault detection) - (>1.5 max earth fault current infeed. Ultra high speed detection required <1 ms):
IN>BB: 0.05…4×I_n (step 0.01×I_n)
Supervision of I0 calculation
Kce: 0.01…1.00 (step 0.01)
I0 error alarm time delay
Tce: 0.0…10.0s (step 0.1s)
I0 supervision blocking: 87BB (P&N)/None
CTS Timer alarm: 0.1s…10.0s (step 0.1s)

Note: I_n is the CT nominal current.

Dead Zone Protection (PU)

Phase threshold
I>DZ: 0.05…4.00×I_n (step 0.01×I_n)
Time delay: 0.00…100.00s (step 10 ms)
Dead Zone Earth: Disabled/Enabled
Neutral threshold:
IN>DZ: 0.05…4.00×I_n (step 0.01×I_n)
Time delay: 0.00…100.00 s (step 10 ms)

Note: In is the CT nominal current.

Breaker Failure Protection (PU)

Caution: the following current set values are expressed in multiple of the local CT's nominal rated current Inp (primary) or Ins (secondary).

Breaker Failure

1st phase O/C threshold
(dead pole detection for 50BF):
I<: 0.05…4.00×I_n (step 0.01×I_n)
Confirmation I>: Disabled/Enabled
2nd phase O/C threshold:
I>: 0.05…4.00×I_n (step 0.01×I_n)
Confirmation IN>: Disabled/Enabled
2nd residual O/C threshold:
IN>: 0.05…4.00×I_n (step 0.01×I_n)

Timers for 50BF Internal Tripping

CB fail 1 timer:
tBF1: 0.00…10.00s (step 10 ms)
CB fail 2 timer:
tBF2: 0.00…10.00s (step 10 ms)

Timers for 50BF External Tripping (Orders from 21 or 87T Etc.)

CB fail 3 timer:
TBF3: 0.00…10.00 s (step 10 ms)
CB fail 4 timer:
TBF4: 0.00…10.00 s (step 10 ms)

Overcurrent Protection (PU) Phase Fault Protection (50/51)

3 phase Overcurrent Function Status I>1:

0. Disabled
1. DT
2. IEC S Inverse
3. IEC V Inverse
4. IEC E Inverse
5. UK LT Inverse
6. IEEE M Inverse
7. IEEE V Inverse
8. IEEE E Inverse
9. US Inverse
10. US ST Inverse

If "function status" ≠0
I>1 Current Set: 0.10…32.00×In
(step 0.01×In)

If "function status" =1
I>1 Time delay: 0.00…100.00s (step 10 ms)

If "function status" ≤5
I>1: 0.025…1.200 (step 0.025)

If "function status" ≥6
I>1 time Dial: 0.5…15.0 (step 0.1)
I>1 Reset Char: DT or inverse

If "function status" ≤5
or
"I>1 Reset Char."=DT and "function status" ≥6
I>1: 0.0…100.0 (step 0.1)

I>2 function:
Disabled, 87BBP&N blocking, High Set I>2, I>2 & 87BBP&N, 87BB/P blocking, 87BB/N blocking, I>2 & 87BB/P or I>2 & 87BB/N

I>2 Current Set (if "I>2 function" enabled)
0.10…32.00×In (step 0.01×In)

If "I>2 function" = high set, I>2
I>2 Time Delay: 0.00…100.00s (step 10 ms)

If "I>2 function" = 87BB (P and/or N)
I>2 Time Delay: 0.2…6.00s (step 0.1s)

Earth Fault Protection (50N/51N)

Residual Overcurrent Function Status IN>1:

0. Disabled
1. DT
2. IEC S Inverse
3. IEC V Inverse
4. IEC E Inverse
5. UK LT Inverse
6. IEEE M Inverse
7. IEEE V Inverse
8. IEEE E Inverse
9. US Inverse
10. US ST Inverse

If "function status" ≠0
"IN >1 current set": 0.10…32.00×In
(step 0.01×In)

If "function status" =1
"IN >1 Time delay": 0.00…100.00s
(step 10 ms)

If "function status" ≤5
"IN >1 TMS": 0.025…1.200 (step 0.025)

If "function status" ≥6
"IN >1 Time Dial": 0.5…15.0 (step 0.1)
"IN >1 Reset Char": DT or Inverse

If "function status" ≤5
or
"IN>1 Reset Char." = DT & "function status" ≥6
IN >1 tReset: 0.0…100.0 (step 0.1)

IN >2 Function:
Disabled, 87BBP&N blocking, High Set I>2, I>2 & 87BBP&N, 87BB/P blocking, 87BB/N blocking, I>2 & 87BB/P or I>2 & 87BB/N

IN>2 Current Set (if "IN>2 function" enabled):
0.10…32.00 xIn (step 0.01×In)

If "IN>2 function" = high set, I>2
IN>2 Time Delay:
0.00…100.00s (step 10 ms)

If “IN>2 function” = 87BB (P and/or N)
IN>2 Time Delay: 0.2…6.00 s (step 0.1s)

CB Control (PU)
Prot Trip Pulse: 0.05…2.00s (step 10 ms)
Trip Latched: Disabled/Enabled
Rest Trip Latch: Yes/No
CB Control by: Disabled, Local and/or Remote and/or Opto
Man Close Pulse: 0.1…10.0s (step 10 ms)
Man Trip Pulse: 0.1…5.0s (step 10 ms)
Man Close Delay: 0…600s (step 10 ms)
87BB Trip Delay: 0…400 ms (step 5 ms)
CB Superv Timer: 10…600 ms (step 5 ms)

Date and Time
IRIG-B Sync: Disabled/Enabled
Battery Alarm: Disabled/Enabled
LocalTime: Enable: Disabled/Fixed/Flexible
DST Enable: Disabled/Enabled

Configuration
Setting Group:
Select via Menu or Select via Opto
Active Settings: Group 1/2/3/4
Setting Group 1: Disabled/Enabled
Setting Group 2: Disabled/Enabled
Setting Group 3: Disabled/Enabled
Setting Group 4: Disabled/Enabled

CU Only
Diff Busbar Prot: Disabled/Enabled
– Differential phase fault
– Sensitive earth fault

PU Only
Dead Zone Prot: Disabled/Enabled
CB Fail & I>: Disabled/Enabled
BB Trip Confirm: Disabled/Enabled
Overcurrent Prot: Disabled/Enabled
Earth Fault Prot: Disabled/Enabled

CU & PU
Setting Values: Primary/Secondary
LCD Contrast: (Factory pre-set)

Measurements and Records List

Fault Recorder
Records for the last 5 faults.

Central Unit:
- Active Setting group
- Faulty phase
- Protection started/operated (87BB, 50BF, Dead Zone…)
- Fault occurrence time and duration
- Check Zone values (Diff. & Bias for A, B, C, N)
- Faulty zone(s)
- Topology prior the fault occurrence

Peripheral Unit:
- Active setting group
- Indication of the tripped phases
- Protection started/operated (87BB, 50BF, Dead Zone…)
- Relay Trip Time and duration
- Relay Trip Time
- Faulty phase currents (A, B, C, N)

Event Recorder
Records for the last 512 events

Oscillography (Disturbance Recorder)

Central Unit:
Duration: Fixed value 1.2 s
Trigger Position: 0…50% (step 16.67%)
Analogue Channel 1: *(up to 8)*
Digital Input 1: *(up to 32)*

Peripheral Unit:
Duration: Settable from 1.2 to 10.5s
Trigger Position: 0…100% (step 0.1%)
Trigger Mode: Single/Extended
Analogue Channel 1: *(up to 4):*
Digital Input 1: *(up to 32):*
Selected binary channel assignment from any DDB status point within the relay (opto input, output contact, alarms, starts, trips, controls, logic…).
Sampling frequency: 600Hz

Communications
RP1 Protocol: Courier
RP1 Address (courier): 6…34
Inactivity Timer: 1…30 minutes
RP1 Port Config *(Courier):*
K Bus/EIA485 (RS485)
RP1 Comms Mode (EIA485 (RS485)):
IEC60870 FT1.2 Frame
10-Bit NoParity
RP1 Baud Rate (EIA485 (RS485)):
9600/19200/38400 bits/s
RP1 Read Only: Disabled/Enabled

Optional Second Rear Communication
RP2 Protocol: Courier (fixed)
RP2 Port Config:
Courier over EIA(RS)232
Courier over EIA(RS)485
K-Bus
RP2 Comms. Mode:
IEC60870 FT1.2 Frame
10-Bit NoParity
RP2 Address: 0…255
RP2 InactivTimer: 1…30mins
RP2 Baud Rate:
9600/19200/38400 bits/s
RP2 Read Only: Disabled/Enabled

Optional Ethernet Port

NIC Tunl Timeout: 1…30mins
NIC Link Report: Alarm/Event/None
NIC Link Timeout: 0.1…60s
NIC Read Only: Disabled/Enabled

Commission Tests

Monitor Bit 1*(up to 8):*
Binary function link strings, selecting which DDB signals have their status visible in the Commissioning menu, for test purposes

Test Mode: (CU)

Test Mode: Enabled or Out of Service

- 87BB trip blocked but 50BF (back trip) enable per zone
- 87BB and 50BF trip blocked per zone
- All the protections (87BB, Dead Zone, General 50BF, Local 50BF, O/C) disabled
- 87BB disable but 50BF (back trip) enable for all zones

Test Mode: (PU)

Test mode: Disabled/50BF Disabled/Overhaul
Test Pattern:
Configuration of which output contacts are to be energised when the contact test is applied.
Static Test Mode: Disabled/Enabled
Opto input voltage range:
24-27 V
30-34 V
48-54 V
110-125 V
220-250 V
Custom Opto Input 1
(up to # = max. opto no. fitted)
Custom options allow independent thresholds to be set per opto, from the same range as above
Filter Control

Opto Input Labels

Opto Input 1 up to:
8 for P741
16 for P742
24 for P743
User defined text string to describe the function of the particular opto input.

Outputs Labels

Relay 1 up to:
8 for P741 & P742
16 for P743
User defined text string to describe the function of the particular relay output contact.

IED Configurator

Switch Conf.Bank:
No Action/Switch Banks

IEC61850 GOOSE

GoEna: Disabled/Enabled
Test Mode: Disabled/Enabled
VOP Test Pattern: 0x00000000/0xFFFFFFFF
Ignore Test Flag: No/Yes

GETTING STARTED

CONTENTS

1.	**GETTING STARTED**	**3**
1.1	**Front Panel**	**3**
1.1.1	Front Panel Compartments	3
1.1.2	HMI Panel	4
1.1.3	USB Port	4
1.1.4	Fixed Function LEDs	5
1.1.5	Programmable LEDs	5
2.	**REAR PANEL**	**9**
2.1	**Terminal block ingress protection**	**10**
3.	**SETTINGS APPLICATION SOFTWARE**	**11**
4.	**USING THE HMI PANEL**	**12**
4.1	**Navigating the HMI Panel**	**12**
4.2	**Getting Started**	**13**
4.3	**Default Display**	**14**
4.4	**Default Display Navigation**	**15**
4.5	**Password Entry**	**15**
4.6	**Processing Alarms and Records**	**16**
4.7	**Menu Structure**	**17**
4.8	**Changing the Settings**	**18**
4.9	**Direct Access (the Hotkey Menu)**	**18**
4.9.1	Setting Group Selection using Hotkeys	19
4.9.2	Control Inputs	19
4.9.3	Circuit Breaker Control	19
4.10	**Function Keys**	**20**
5.	**DATE AND TIME CONFIGURATION**	**22**
5.1	**Using an SNTP Signal**	**22**
5.2	**Using an IRIG-B Signal**	**22**
5.3	**Using an IEEE 1588 PTP Signal**	**22**
5.4	**Without a Timing Source Signal**	**23**
5.5	**Time Zone Compensation**	**23**
5.6	**Daylight Saving Time Compensation**	**24**
6.	**SETTINGS GROUP SELECTION**	**25**

FIGURES

Figure 1: Front Panel (60TE) 3
Figure 2: HMI Panel (60TE) 4
Figure 3: P742 Relay Rear View 40TE 9
Figure 4: P743 Relay Rear View 60TE 9
Figure 5: P741 Relay Rear View 80TE 10
Figure 6: Navigating the HMI panel 13
Figure 7: Default display navigation 15

1. GETTING STARTED

BEFORE CARRYING OUT ANY WORK ON THE EQUIPMENT, THE USER SHOULD BE FAMILIAR WITH THE CONTENTS OF THE SAFETY SECTION/SAFETY GUIDE PXXX-SG-4LM-3 OR LATER ISSUE, THE TECHNICAL DATA SECTION AND THE RATINGS ON THE EQUIPMENT RATING LABEL.

1.1 Front Panel

Depending on the exact model and chosen options, the product will be housed in either a 40TE, 60TE or 80TE case.
By way of example, the following diagram shows the front panel of a typical 60TE unit. The front panels of the products based on 40TE and 80TE cases have a lot of commonalities and differ only in the number of hotkeys and user-programmable LEDs.

R00298

Figure 1: Front panel (60TE)

The front panel consists of:

- Top and bottom compartments with hinged cover
- LCD display
- Keypad
- USB Type B port inside the bottom compartment
- Fixed function LEDs
- Function keys and LEDs (60TE and 80TE models)
- Programmable LEDs

1.1.1 Front Panel Compartments

The top compartment contains labels for the:

- Serial number
- Current and voltage ratings.

The bottom compartment contains:

- USB Type B port

1.1.2 HMI Panel

The keypad provides full access to the device functionality using a range of menu options. The information is displayed on the LCD. The LCD is a high resolution monochrome display with 16 characters by 3 lines and controllable back light.

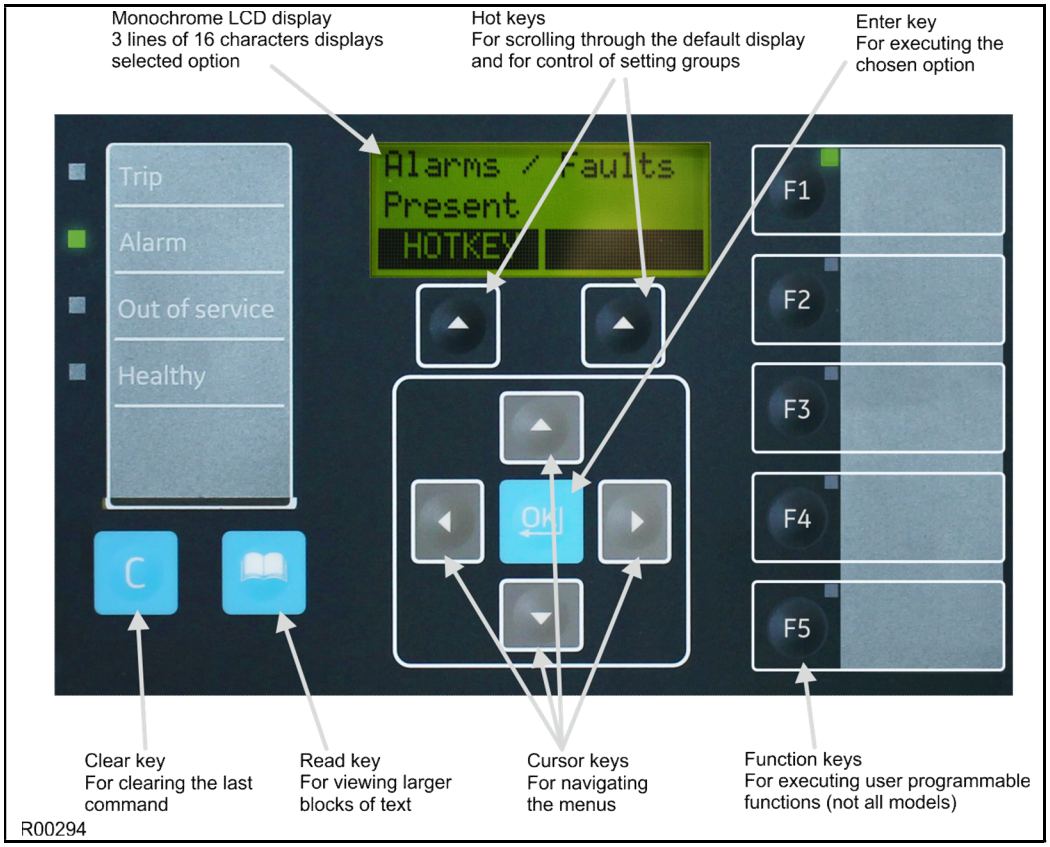

Figure 2: HMI panel (60TE)

Note: As the LCD display has a resolution of 16 characters by 3 lines, some of the information is in a condensed mnemonic form.

1.1.3 USB Port

The USB port is situated inside the bottom compartment and is used to communicate with a locally connected PC.

It has two main purposes:

- To transfer settings information to/from the PC from/to the device
- For downloading firmware updates and menu text editing

The port is intended for temporary connection during testing, installation and commissioning. It is not intended to be used for permanent SCADA communications. This port supports the Courier communication protocol only. Courier is a proprietary communication protocol to allow communication with a range of protection equipment, and between the device and the Windows-based support software package.

You can connect the unit to a PC with a USB cable up to 5 m in length.

The inactivity timer for the front port is set to 15 minutes. This controls how long the unit maintains its level of password access on the front port. If no messages are received on the front port for 15 minutes, any password access level that has been enabled is cancelled.

Note: The front USB port does not support automatic extraction of event and disturbance records, although this data can be accessed manually.

WHEN NOT IN USE, ALWAYS CLOSE THE COVER OF THE USB PORT TO PREVENT CONTAMINATION.

1.1.4 Fixed Function LEDs

The fixed-function LEDs on the left-hand side of the front panel indicate the following conditions.

- Trip (Red) switches ON when the IED issues a trip signal. It is reset when the associated fault record is cleared from the front display. Also, the trip LED can be configured as self-resetting.
- Alarm (Yellow) flashes when the IED registers an alarm. This may be triggered by a fault, event or maintenance record. The LED flashes until the alarms have been accepted (read), then changes to constantly ON. When the alarms are cleared, the LED switches OFF.
- Out of service (Yellow) is ON when the IED's protection is unavailable.
- Healthy (Green) is ON when the IED is in correct working order and should be ON at all times. It goes OFF if the unit's self-tests show there is an error in the hardware or software. The state of the healthy LED is reflected by the watchdog contacts at the back of the unit.

To improve the visibility of the settings via the front panel, the LCD contrast can be adjusted using the **LCD Contrast** setting in the **CONFIGURATION** column. This should only be necessary in very hot or cold ambient temperatures.

1.1.5 Programmable LEDs

The device has several programmable LEDs, which can be associated with PSL-generated signals. The programmable LEDs for most models are tri-colour and can be set to RED, YELLOW or GREEN. However, the programmable LEDs for some models are single-colour (red) only. The single-colour LEDs can be recognised by virtue of the fact they are large and slightly oval, whereas the tri-colour LEDs are small and round.

Central Unit P741:

LED Number	LED Input Connection/Text	Latched	P74x LED Function Indication
1	LED1 Red LED1 Yellow LED1 Green	Yes	87BB fault on phase A Not used Not used
2	LED2 Red LED2 Yellow LED2 Green	Yes	87BB fault on phase B Not used Not used
3	LED3 Red LED3 Yellow LED3 Green	Yes	87BB fault on phase C Not used Not used
4	LED4 Red LED4 Yellow LED4 Green	Yes	50BF Trip Zone 1 87BB & 50BF Trip Zone 1 87BB Trip Zone 1
5	LED5 Red LED5 Yellow LED5 Green	Yes	50BF Trip Zone 2 87BB & 50BF Trip Zone 2 87BB Trip Zone 2
6	LED6 Red LED6 Yellow LED6 Green	No	Zone 1 blocked by itself Zone 1 blocked by Check Zone Zone 1 protected

LED Number	LED Input Connection/Text	Latched	P74x LED Function Indication
7	LED7 Red LED7 Yellow LED7 Green	No	Zone 2 blocked by itself Zone 2 blocked by Check Zone Zone 2 protected
8	LED8 Red LED8 Yellow LED8 Green	No	Fiber communication Error Fiber communication to change Fiber communication healthy
9	FnKey LED1 Red FnKey LED1 Yellow FnKey LED1 Green	No	Zone or CZ circuitry fault block Zone or CZ circuitry fault alarm No Zone or CZ circuitry fault
10	FnKey LED2 Red FnKey LED2 Yellow FnKey LED2 Green	No	Zone or CZ PU error fault block Zone or CZ PU error fault alarm No Zone or CZ PU error fault
11	FnKey LED3 Red FnKey LED3 Yellow FnKey LED3 Green	No	All protections Disabled Not used All protections Not Disabled
12	FnKey LED4 Red FnKey LED4 Yellow FnKey LED4 Green	No	Zone 1: 87BB & 50BF blocked Zone 1: 50BF blocked Zone 1: protected
13	FnKey LED5 Red FnKey LED5 Yellow FnKey LED5 Green	No	Zone 2: 87BB & 50BF blocked Zone 2: 50BF blocked Zone 2: protected
14	FnKey LED6 Red FnKey LED6 Yellow FnKey LED6 Green	No	Not used Not used Reset CU Indications
15	FnKey LED7 Red FnKey LED7 Yellow FnKey LED7 Green	No	Not used Not used Reset CU & PU Indications
16	FnKey LED8 Red FnKey LED8 Yellow FnKey LED8 Green	No	Not used Not used Reset PU Trip Latch
17	FnKey LED9 Red FnKey LED9 Yellow FnKey LED9 Green	No	Not used Not used Manual DR trigger
18	FnKey LED10 Red FnKey LED10 Yellow FnKey LED10 Green	No	Not used Dead Zone fault Not used

Peripheral Unit P742:

LED Number	LED Input Connection/Text	Latched	P74x LED Function Indication
1	LED 1 Red	No	Isolator 1 Closed
2	LED 2 Red	No	Isolator 2 Closed
3	LED 3 Red	No	Isolator 3 Closed
4	LED 4 Red	Yes	Trip on CU 50BF backtrip order
5	LED 5 Red	Yes	Trip on CU 87BB trip order
6	LED 6 Red	Yes	Dead Zone fault
7	LED 7 Red	No	Circuit Breaker out of service
8	LED 8 Red	No	Fiber communication Error

Peripheral Unit P743:

LED Number	LED Input Connection/Text	Latched	P74x LED Function Indication
1	LED1 Red LED1 Yellow LED1 Green	No	Isolator 1 Closed Isolator 1 Status Alarm Isolator 1 Open
2	LED2 Red LED2 Yellow LED2 Green	No	Isolator 2 Closed Isolator 2 Status Alarm Isolator 2 Open
3	LED3 Red LED3 Yellow LED3 Green	No	Isolator 3 Closed Isolator 3 Status Alarm Isolator 3 Open
4	LED4 Red LED4 Yellow LED4 Green	Yes	Trip on CU 50BF backtrip order Not used Not used
5	LED5 Red LED5 Yellow LED5 Green	Yes	Trip on CU 87BB trip order Not used Not used
6	LED6 Red LED6 Yellow LED6 Green	Yes	Dead Zone fault Not used Not used
7	LED7 Red LED7 Yellow LED7 Green	No	Circuit Breaker out of service Not used Circuit Breaker healthy
8	LED8 Red LED8 Yellow LED8 Green	No	Fiber communication Error Fiber communication to change Fiber communication healthy
9	FnKey LED1 Red FnKey LED1 Yellow FnKey LED1 Green	No	Not used Not used Reset PU Indications
10	FnKey LED2 Red FnKey LED2 Yellow FnKey LED2 Green	No	Not used Not used Reset PU Trip Latch
11	FnKey LED3 Red FnKey LED3 Yellow FnKey LED3 Green	No	Not used
12	FnKey LED4 Red FnKey LED4 Yellow FnKey LED4 Green	No	Not used Mode 50BF disabled Mode normal
13	FnKey LED5 Red FnKey LED5 Yellow FnKey LED5 Green	No	Mode overhaul Not used Mode normal
14	FnKey LED6 Red FnKey LED6 Yellow FnKey LED6 Green	No	Not used
15	FnKey LED7 Red FnKey LED7 Yellow FnKey LED7 Green	No	Not used
16	FnKey LED8 Red FnKey LED8 Yellow FnKey LED8 Green	No	Not used

LED Number	LED Input Connection/Text	Latched	P74x LED Function Indication
17	FnKey LED9 Red FnKey LED9 Yellow FnKey LED9 Green	No	Not used
18	FnKey LED10 Red FnKey LED10 Yellow FnKey LED10 Green	No	Not used

2. REAR PANEL

All current and voltage signals, digital logic input signals and output contacts are connected at the rear of the relay. Also connected at the rear is the twisted pair wiring for the rear EIA(RS)485 communication port, the IRIG-B time synchronizing input and the optical fiber rear communication port which are both optional.

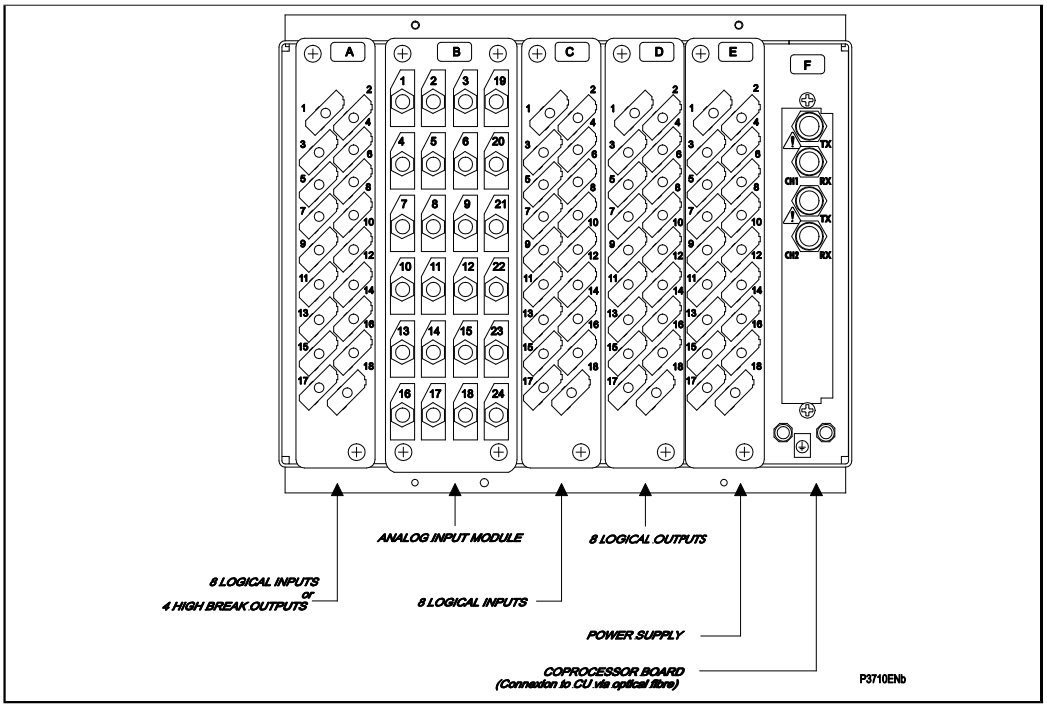

Figure 3: P742 relay rear view 40TE

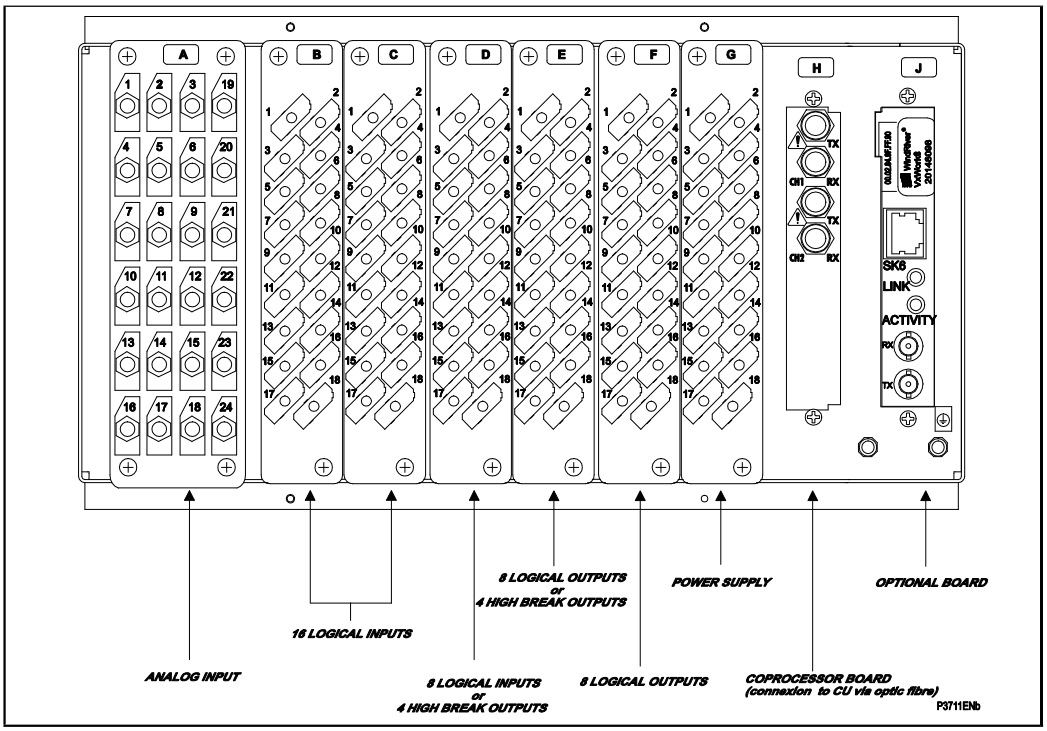

Figure 4: P743 relay rear view 60TE

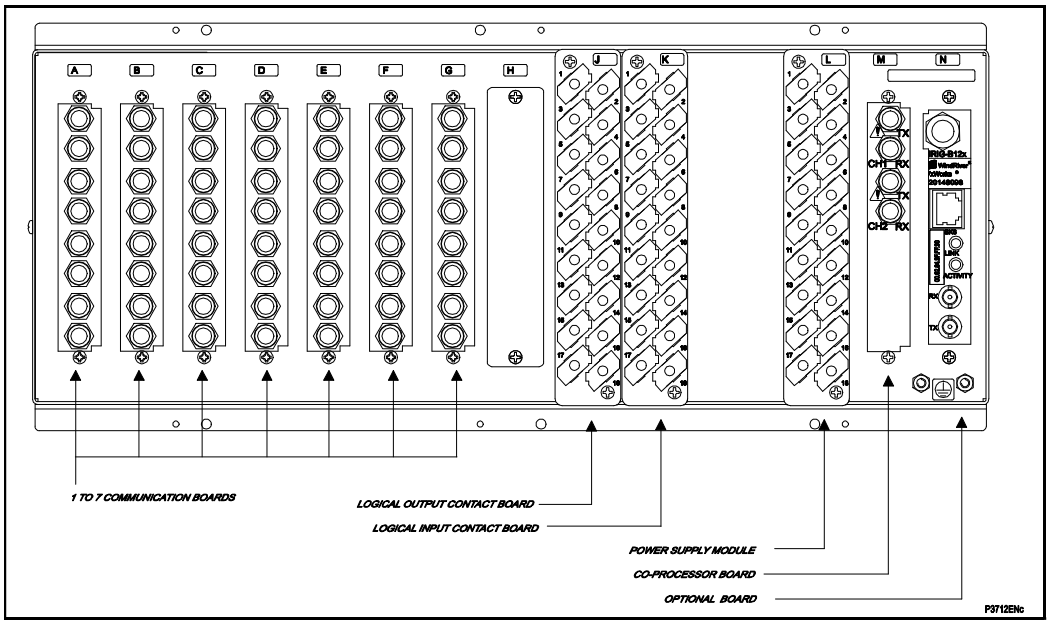

Figure 5: P741 relay rear view 80TE

Refer to Appendix B to see the full wiring diagrams list.

2.1 Terminal block ingress protection

IP2x shields and side cover panels are designed to provide IP20 ingress protection for MiCOM terminal blocks. The shields and covers may be attached during installation or retrofitted to upgrade existing installations - see the figure below. More information is available at your local sales office or through our contact centre at GAsupport@gevernova.com.

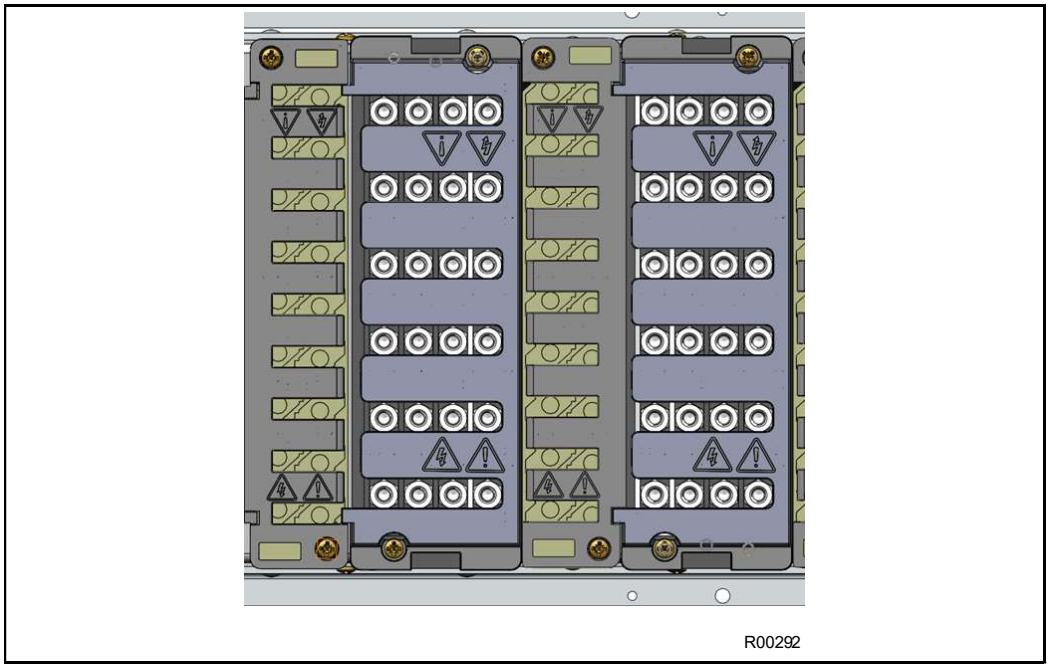

Figure 6: Example - fitted IP2x shields (cabling omitted for clarity)

3. SETTINGS APPLICATION SOFTWARE

To configure this device, you will need to use the Settings Application Software. The settings application software used in this range of IEDs is called MiCOM S1 Agile. It is a collection of software tools, which is used for setting up and managing the IEDs.

Although you can change many settings using the front panel HMI, some of the features cannot be configured without the Settings Application Software; for example, the programmable scheme logic, or IEC61850 communications.

If you do not already have a copy of the Settings Application Software, you can obtain it from the GE Vernova contact centre at GAsupport@gevernova.com

To configure your product, you will need a data model that matches your product. When you launch the Settings Application Software, you will be presented with a panel that allows you to invoke the “Data Model Manager”. This will close the other aspects of the software to allow an efficient import of the chosen data model. If you don’t have, or can’t find, the data model relating to your product, please contact the GE Vernova contact centre at GAsupport@gevernova.com

When you have loaded all the data models you need, you should restart the Settings Application Software and start to create a model of your system using the “System Explorer” panel.

The software is designed to be intuitive, but help is available in an online help system and the Settings Application Software user guide P40-M&CR-SAS-UG-EN-n, where 'Language' is a 2-letter code designating the language version of the user guide and 'n' is the latest version of the settings application software.

4. USING THE HMI PANEL

Using the HMI, you can:

- Display and modify settings
- View the digital I/O signal status
- Display measurements
- Display fault records
- Reset fault and alarm indications

The keypad provides full access to the device functionality by means of a range of menu options. The information is displayed on the LCD.

Keys	Description	Function
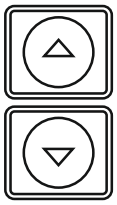	Up and down cursor keys	To change the menu level or change between settings in a particular column, or changing values within a cell
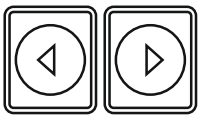	Left and right cursor keys	To change default display, change between column headings, or changing values within a cell
	ENTER key	For changing and executing settings
	Hotkeys	For executing commands and settings for which shortcuts have been defined
	Cancel key	To return to column header from any menu cell
	Read key	To read alarm messages
	Function keys (not all models)	For executing user programmable functions

Note: As the LCD display has a resolution of 16 characters by 3 lines, some of the information is in a condensed mnemonic form.

4.1 Navigating the HMI Panel

The cursor keys are used to navigate the menus. These keys have an auto-repeat function if held down continuously. This can be used to speed up both setting value changes and menu navigation. The longer the key is held pressed, the faster the rate of change or movement.

The figure below shows how to navigate the menu items in the form of a menu navigation map.

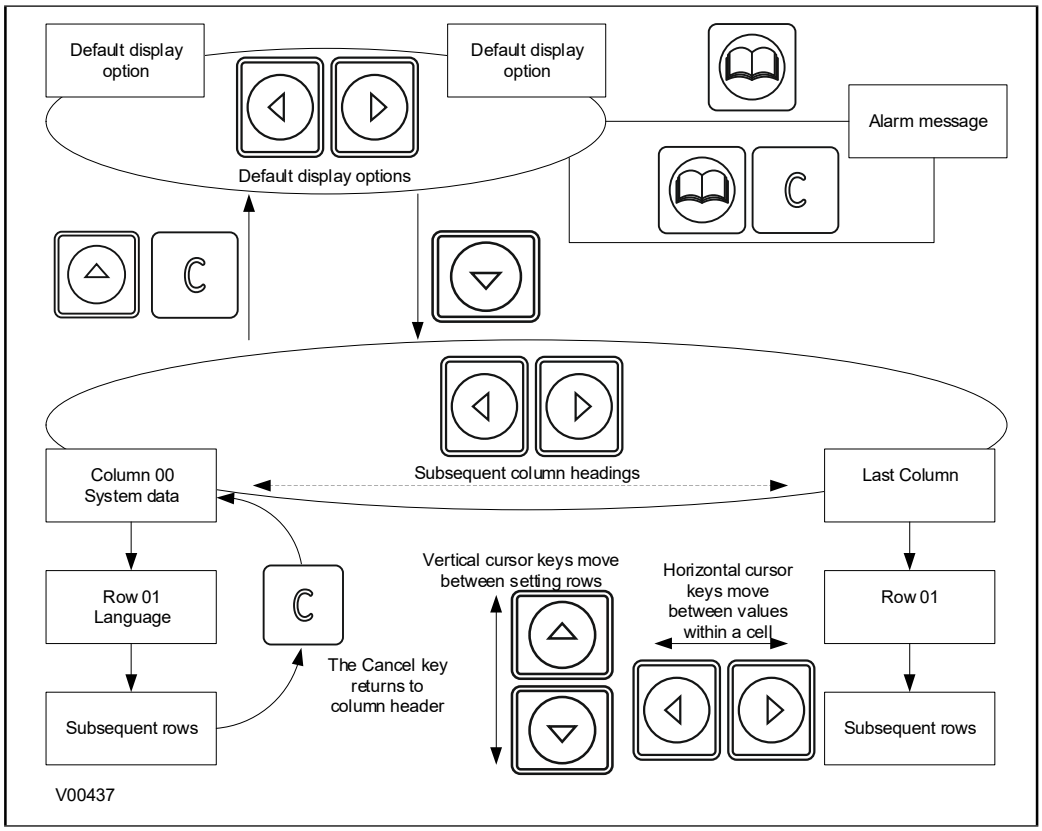

Figure 7: Navigating the HMI panel

4.2 Getting Started

When you first start the IED, it will go through its power up procedure. After a few seconds it will settle down into one of the top-level menus. There are two menus at this level:

- The Alarms menu for when there are alarms present
- The default display menu for when there are no alarms present.

If there are alarms present, the yellow Alarms LED will be flashing, and the menu display will read as follows:

Alarms/Faults Present

Even though the device itself should be in full working order when you first start it, an alarm could still be present, for example, if there is no network connection for a device fitted with a network card. If this is the case, you can read the alarm by pressing the 'Read' key.

Alarms NIC Link Fail

If the device is fitted with an Ethernet card, you will first need to connect the device to an active Ethernet network to clear the alarm and get the default display.

If there are other alarms present, these must also be cleared before you can get into the default display menu options.

4.3 Default Display

The HMI contains a range of possible options that you can choose to be the default display. The options available are:

NERC Compliant banner

If the device is a cyber-security model, it will provide a NERC-compliant default display. If the device does not contain the cyber-security option, this display option is not available.

```
ACCESS ONLY FOR
AUTHORISED USERS
```

Date and time
For example:

```
11 : 09 : 15 :
23 Nov 2011
```

Description (user-defined)
For example:

```
Description
MiCOM P14NB
```

Plant reference (user-defined)
For example:

```
Plant Reference
MiCOM
```

Access Level
For example:

```
Access Level
3
```

In addition to the above, there are also displays for the system voltages, currents, power and frequency etc., depending on the device model.

4.4 Default Display Navigation

The following diagram is an example of the default display navigation. In this example, we have used a cybersecure model. This is an example only and may not apply in its entirety to all models. The actual display options available depend on the exact model.

Use the horizontal cursor keys to step through from one display to the next.

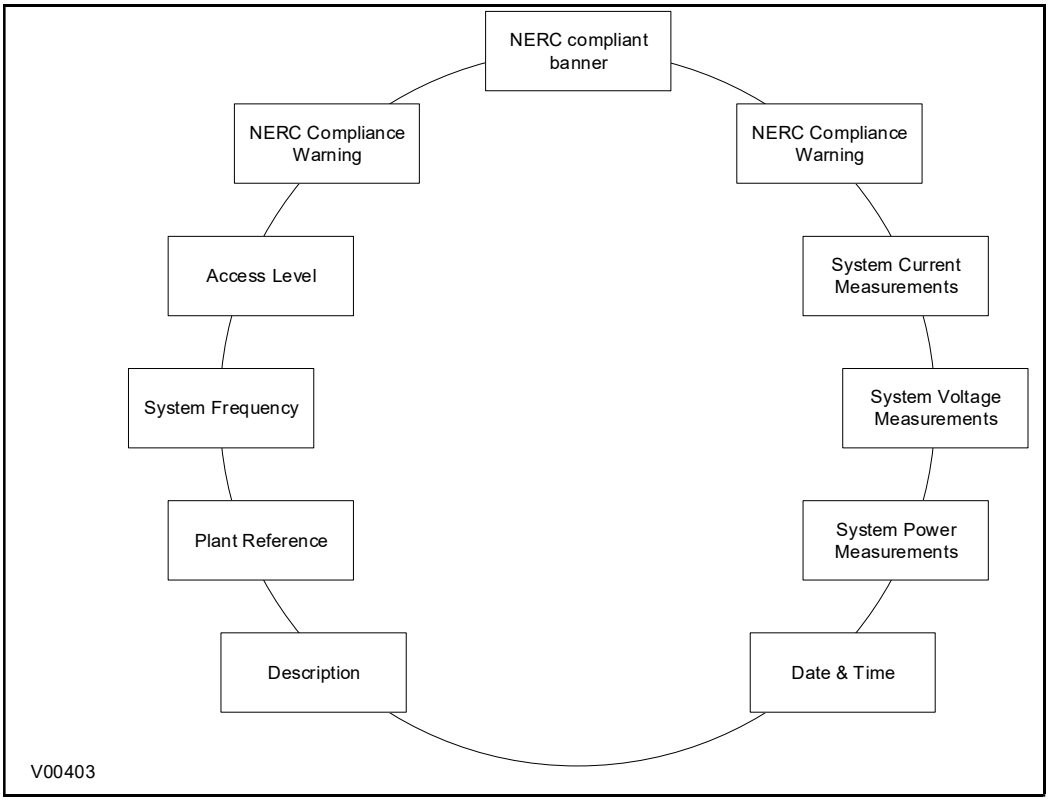

Figure 8: Default display navigation

If the device is cyber-secure but is not yet configured for NERC compliance (see Cyber-security chapter), a warning will appear when moving from the "NERC compliant" banner. The warning message is as follows:

DISPLAY NOT NERC
COMPLIANT. OK?

You will have to confirm with the **Enter** button before you can go any further.

Note: Whenever the IED has an uncleared alarm the default display is replaced by the text Alarms/Faults present. You cannot override this default display. However, you can enter the menu structure from the default display, even if the display shows the Alarms/Faults present message.

4.5 Password Entry

Configuring the default display (in addition to modification of other settings) requires level 3 access. You will be prompted for a password before you can make any changes, as follows. The default level 3 password is ChangeMe1#.

Enter password
**** Level 1

1. A flashing cursor shows which character field of the password can be changed. Press the **up** or **down** cursor keys to change each character (tip: pressing the up arrow once will return an upper case "A" as required by the default level 3 password).
2. Use the **left** and **right** cursor keys to move between the character fields of the password.
3. Press the **Enter key** to confirm the password. If you enter an incorrect password, an invalid password message is displayed then the display reverts to **Enter password**. On entering a valid password, a message appears indicating that the password is correct and if so what level of access has been unlocked. If this level is sufficient to edit the selected setting, the display returns to the setting page to allow the edit to continue. If the correct level of password has not been entered, the password prompt page appears again.
4. To escape from this prompt, press the **Clear** key. Alternatively, enter the password using **System Data** > **Password**. If the keypad is inactive for 15 minutes, the password protection of the front panel user interface reverts to the default access level.
5. To manually reset the password protection to the default level, select **System Data** > **Password**, then press the clear key instead of entering a password.

Note: In the **SECURITY CONFIG** column, you can set the maximum number of attempts, the time window in which the failed attempts are counted and the time duration for which the user is blocked.

Adding a username in the HMI panel is optional. Go to **Front Panel Login** in the Cyber Security chapter for more information.

4.6 Processing Alarms and Records

If there are any alarm messages, they will appear on the default display and the yellow alarm LED flashes. The alarm messages can either be self-resetting or latched. If they are latched, they must be cleared manually.

1. To view the alarm messages, press the Read key. When all alarms have been viewed but not cleared, the alarm LED changes from flashing to constantly on, and the latest fault record appears (if there is one).
2. Scroll through the pages of the latest fault record, using the cursor keys. When all pages of the fault record have been viewed, the following prompt appears.

Press clear to reset alarms

3. To clear all alarm messages, press the **Clear** key. To return to the display showing alarms or faults present, and leave the alarms uncleared, press the **Read** key.
4. Depending on the password configuration settings, you may need to enter a password before the alarm messages can be cleared.
5. When all alarms are cleared, the yellow alarm LED switches off. If the red LED was on, this will also be switched off.

To speed up the procedure, you can enter the alarm viewer using the **Read** key and subsequently pressing the **Clear** key. This goes straight to the fault record display. Press the **Clear** key again to move straight to the alarm reset prompt, then press the **Clear** key again to clear all alarms.

Note: If you press the read key when viewing the fault information for P741 only information for PU's 7 to 22 is available.

4.7 Menu Structure

Settings, commands, records and measurements are stored inside the unit in non-volatile memory in a local database. When using the Human Machine Interface (HMI) it is convenient to visualize the menu navigation system as a table. Each item in the menu is known as a cell, which is accessed by reference to a column and row address. Each column and row is assigned a 2-digit hexadecimal number, resulting in a unique 4-digit cell address for every cell in the database. The main menu groups are allocated columns and the items within the groups are allocated rows, meaning a particular item within a particular group is a cell.

Each column contains all related items, for example all the disturbance recorder settings and records are in the same column.

There are three types of cell:

- Settings: This is for parameters that can be set to different values
- Commands: This is for commands to be executed
- Data: this is for measurements and records to be viewed, which are not settable

Note: Sometimes the term "Setting" is used generically to describe all the three types.

The table below provides an example of the menu structure.

SYSTEM DATA (Col 00)	VIEW RECORDS (Col 01)	MEASUREMENTS 1 (Col 02)	…
Language (Row 01)	"Select Event [0...n]" (Row 01)	IA Magnitude (Row 01)	…
Password (Row 02)	Menu Cell Ref (Row 02)	IA Phase Angle (Row 02)	…
Sys Fn Links Row 03)	Time & Date (Row 03)	IB Magnitude (Row 03)	…
…	…	…	…

It is more convenient to specify all the settings in a single column, detailing the complete Courier address for each setting. The above table may therefore be represented as follows:

Setting	Column	Row	Description
SYSTEM DATA	**00**	**00**	**First Column definition**
Language (Row 01)	00	01	First setting within first column
Password (Row 02)	00	02	Second setting within first column
Sys Fn Links Row 03)	00	03	Third setting within first column
…	…	…	
VIEW RECORDS	**01**	**00**	**Second Column definition**
Select Event [0...n]	01	01	First setting within second column
Menu Cell Ref	01	02	Second setting within second column
Time & Date	01	03	Third setting within second column
…	…	…	
MEASUREMENTS 1	**02**	**00**	**Third Column definition**
IA Magnitude	02	01	First setting within third column
IA Phase Angle	02	02	Second setting within third column
IB Magnitude	02	03	Third setting within third column
…	…	…	

The first three column headers are common throughout the entire Px40 series. However, the rows within each of these column headers may differ according to the product type. Many of the column headers are the same for all products within the Px40 series. However, there is no guarantee that the addresses will be the same for a particular column header. Therefore, you should always refer to the product documentation and not make any assumptions

4.8 Changing the Settings

1. Starting at the default display, press the **down** cursor key to show the first column heading.
2. Use the horizontal cursor keys to select the required column heading.
3. Use the vertical cursor keys to view the setting data in the column.
4. To return to the column header, either press the **up** cursor key for a second or so or press the **Cancel** key once. It is only possible to move across columns at the column heading level.
5. To return to the default display, press the **up** cursor key or the **Cancel** key from any of the column headings. If you use the auto-repeat function of the **up** cursor key, you cannot go straight to the default display from one of the column cells because the auto-repeat stops at the column heading.
6. To change the value of a setting, go to the relevant cell in the menu, then press the **Enter** key to change the cell value. A flashing cursor on the LCD shows that the value can be changed. You may be prompted for a password first.
7. To change the setting value, press the **up** and **down** cursor keys. If the setting to be changed is a binary value or a text string, select the required bit or character to be changed using the left and right cursor keys.
8. Press the **Enter** key to confirm the new setting value or the **Clear** key to discard it. The new setting is automatically discarded if it is not confirmed within 15 seconds.
9. For protection group settings and disturbance recorder settings, the changes must be confirmed before they are used. When all required changes have been entered, return to the column heading level and press the **down** cursor key. Before returning to the default display, the following prompt appears.

```
Update settings?
Enter or clear
```

10. Press the **Enter** key to accept the new settings or press the **Clear** key to discard the new settings.

Notes: For the protection group and disturbance recorder settings, if the menu time-out occurs before the setting changes have been confirmed, the setting values are discarded. Control and support settings, however, are updated immediately after they are entered, without the **Update settings?** prompt

4.9 Direct Access (the Hotkey Menu)

For settings and commands that need to be executed quickly or on a regular basis, the IED provides a pair of keys directly below the LCD display. These so called Hotkeys can be used to execute specified settings and commands directly.

The functions available for direct access using these keys are:

- Setting group selection
- Control inputs
- Circuit Breaker (CB) control functions

The availability of these functions is controlled by the **Direct Access** cell in the **CONFIGURATION** column. There are four options: **Disabled**, **Enabled**, **CB Ctrl only** and **Hotkey only**.

For the Setting Group selection and Control inputs, this cell must be set to either **Enabled** or **Hotkey only**. For CB Control functions, the cell must be set to **Enabled** or **CB Ctrl only.**

4.9.1 Setting Group Selection using Hotkeys

In some models you can use the hotkey menu to select the settings group. By default, only Setting group 1 is enabled. Other setting groups will only be available if they are first enabled. To be able to select a different setting group, you must first enable them in the **CONFIGURATION** column.

To access the hotkey menu from the default display, press the key directly below the HOTKEY text on the LCD.

Use the right cursor keys to enter the **SETTING GROUP** menu.

Select the setting group with **Nxt Grp** and confirm by pressing **Select**. If neither of the cursor keys are pressed within 20 seconds of entering a hotkey sub menu, the device reverts to the default display.

4.9.2 Control Inputs

The control inputs are user-assignable functions. You can use the **CTRL I/P CONFIG** column to configure the control inputs for the hotkey menu. To do this, use the first setting **Hotkey Enabled** cell to enable or disable any of the 32 control inputs. You can then set each control input to latched or pulsed and set its command to **On/Off**, **Set/Reset**, **In/Out**, or **Enabled/Disabled**.

By default, the hotkey is enabled for all 32 control inputs, and they are set to **Set/Reset** and are **Latched**.

To access the hotkey menu from the default display, you press the key directly below the HOTKEY text on the LCD. The following screen will appear.

```
User32 STG GP
HOTKEY MENU
```

Press the **right** cursor key twice to get to the first control input, or the **left** cursor key to get to the last control input.

```
STP GP User02
Control Input 1
```

Now you can execute the chosen function (Set/Reset in this case).

If neither of the cursor keys are pressed within 20 seconds of entering a hotkey sub menu, the device reverts to the default display.

Note: With the exception of pulsed operation, the status of the control inputs is stored in the battery/supercapacitor backed memory.

For firmware 42 the Function Keys and Controls Inputs are stored in FLASH, so the battery is not required (except for events and DR), the last status will be restored each time.

4.9.3 Circuit Breaker Control

You can open and close the controlled circuit breaker with the hotkey to the right, if enabled as described above.

By default, hotkey access to the circuit breakers is disabled.

If hotkey access to the circuit breakers has been enabled, the bottom right-hand part of the display will read "Open or Close" depending on whether the circuit breaker is closed or open respectively:

For example:

Plant Reference MiCOM

To close the circuit breaker (in this case), press the key directly below CLOSE. You will be given an option to cancel or confirm.

Execute CB Close

More detailed information on this can be found in the Operation chapter

4.10 Function Keys

Most products have several function keys for programming control functionality using the programmable scheme logic (PSL).

Each function key has an associated programmable tri-colour LED that can be programmed to give the desired indication on function key activation.

These function keys can be used to trigger any function that they are connected to as part of the PSL. The function key commands are in the **FUNCTION KEYS** column.

The first cell down in the **FUNCTION KEYS** column is the **Fn Key Status** cell. This contains a binary string, which represents the function key commands. Their status can be read from this binary string.

FUNCTION KEYS Fn Key Status

The next cell down (**Fn Key 1**) allows you to activate or disable the first function key (1). The **Lock** setting allows a function key to be locked. This allows function keys that are set to Toggled mode and their DDB signal active ‘high’, to be locked in their active state, preventing any further key presses from deactivating the associated function. Locking a function key that is set to Normal mode causes the associated DDB signals to be permanently off. This safety feature prevents any inadvertent function key presses from activating or deactivating critical functions.

FUNCTION KEYS Fn Key 1

The next cell down (**Fn Key 1 Mode**) allows you to set the function key to **Normal** or **Toggled**. In the Toggle mode the function key DDB signal output stays in the set state until a reset command is given, by activating the function key on the next key press. In Normal mode, the function key DDB signal stays energized for as long as the function key is pressed then reset automatically. If required, a minimum pulse width can be programmed by adding a minimum pulse timer to the function key DDB output signal.

FUNCTION KEYS Fn Key 1 Mode

The next cell down (**Fn Key 1 Label**) allows you to change the label assigned to the function. The default label is **Function key 1** in this case. To change the label, you need to press the enter key and then change the text on the bottom line, character by character. This text is displayed when a function key is accessed in the function key menu, or it can be displayed in the PSL.

FUNCTION KEYS Fn Key 1 Label

Subsequent cells allow you to carry out the same procedure as above for the other function keys.

The status of the function keys is stored in non-volatile memory. If the auxiliary supply is interrupted, the status of all the function keys is restored. The IED only recognizes a single function key press at a time and a minimum key press duration of approximately 200 ms is required before the key press is recognized. This feature avoids accidental double presses.

5. DATE AND TIME CONFIGURATION

The date and time setting will normally be updated automatically by the chosen UTC (Universal Time Co-ordination) time synchronization mechanism when the device is in service. You can also set the date and time manually using the **Date/Time** cell in the **DATE AND TIME** column.

5.1 Using an SNTP Signal

When using SNTP to maintain the clock, the IED must first be connected to the SNTP server, which should be energized and functioning.

1. In the **DATE AND TIME** column, check that either the **Primary Source** or **Secondary Source** setting is set to **SNTP**.
2. Ensure that the IED receives valid time synchronization messages by checking that the **SNTP Status** cell reads **Server 1 OK** or **Server 2 OK**.
3. Check that the **Act. Time Source** cell reads **SNTP**. This indicates that the IED is using PTP as the source for its time. Note that If IRIG-B or PTP have been selected as the Primary Source, these must first be disconnected before the device can switch to SNTP as the active source.
4. Once the IED is using SNTP as the active time source, adjust the time offset of the universal coordinated time on the SNTP Server equipment, so that local time is displayed.
5. Check that the time, date and month are correct in the **Date/Time** cell.

5.2 Using an IRIG-B Signal

When using IRIG-B to maintain the clock, the IED must first be connected to the timing source equipment (usually a P594/RT430), which should be energized and functioning.

1. In the **DATE AND TIME** column, check that either the **Primary Source** or **Secondary Source** setting is set to **IRIG-B**.
2. Ensure the IED is receiving the IRIG-B signal by checking that **IRIG-B Status** cell reads **Active**
3. Check that the **Act. Time Source cell** reads **IRIG-B**. This indicates that the IED is using IRIG-B as the source for its time. Note that If SNTP or PTP have been selected as the Primary Source, these must first be disconnected before the device can switch to IRIG-B as the active source.
4. Once the IED is using IRIG-B as the active time source, adjust the time offset of the universal coordinated time (satellite clock time) on the satellite clock equipment, so that local time is displayed.
5. Check that the time, date and month are correct in the **Date/Time** cell. The IRIG-B signal does not contain the current year, so this also needs to be set manually in this cell.
6. If the auxiliary supply fails, the time and date are maintained by the supercapacitor. Therefore, when the auxiliary supply is restored, you should not have to set the time and date again. To test this, remove the IRIG-B signal, and then remove the auxiliary supply. Leave the device de-energized for approximately 30 seconds. On re-energization, the time should be correct.
7. Reconnect the IRIG-B signal.

5.3 Using an IEEE 1588 PTP Signal

When using IEEE 1588 PTP to maintain the clock, the IED must first be connected to the PTP Grandmaster, which should be energized and functioning.

1. In the **DATE AND TIME** column, check that either the **Primary Source** or **Secondary Source** setting is set to **PTP**.
2. Set the **Domain Number** setting. The domain defines which clocks the IED will use for synchronization. Therefore, this number must match the domain used by the other clocks on the network.
3. Ensure that the IED is receiving valid time synchronization messages by checking that the **PTP Status** cell reads **Valid Master**.

4. Check that **Act. Time Source** cell reads **PTP**. This indicates that the IED is using PTP as the source for its time. Note that If IRIG-B or SNTP have been selected as the Primary Source, these must first be disconnected before the device can switch to PTP as the active source.
5. Once the IED is using PTP as the active time source, adjust the time offset of the universal coordinated time on the Master Clock equipment, so that local time is displayed.
6. Check that the time, date and month are correct in the **Date/Time** cell.

5.4 Without a Timing Source Signal

If the time and date is not maintained by an IRIG-B, PTP or SNTP signal, in the **DATE AND TIME** column, ensure that both the **Primary Source** and **Secondary Source** are set to **NONE**.

1. Check that **Act. Time Source** cell reads **Free Running**.
2. Set the date and time to the correct local time and date using the Date/Time cell or the serial protocol.
3. If the auxiliary supply fails, the time and date are maintained by the supercapacitor. Therefore, when the auxiliary supply is restored, you should not have to set the time and date again. To test this, remove the auxiliary supply. Leave the device de-energized for approximately 30 seconds. On re-energization, the time should be correct.

5.5 Time Zone Compensation

The UTC time standard uses Greenwich Mean Time as its standard. Without compensation, the date and time would be displayed on the device irrespective of its location.

You may wish to display the local time corresponding to its geographical location. You can do this with the settings **LocalTime Enable** and **LocalTime Offset**.

The **LocalTime Enable** has three setting options; **Disabled**, **Fixed**, and **Flexible**.

With **Disabled**, no local time zone is maintained. Time synchronization from any interface will be used to directly set the master clock. All times displayed on all interfaces will be based on the master clock with no adjustment.

With **Fixed**, a local time zone adjustment is defined using the **LocalTime Offset** setting and all non-IEC 61850 interfaces, which use the Simple Network Time Protocol (SNTP), are compensated to display the local time.

With **Flexible**, a local time zone adjustment is defined using the **LocalTime Offset** setting. The non-local and non-IEC 61850 interfaces can be set to either the UTC zone or the local time zone. The local interfaces are always set to the local time zone, and the Ethernet interface is always set to the UTC zone.

The interfaces where you can select between UTC and Local Time are the serial interfaces RP1, RP2, DNP over Ethernet (if applicable) and Tunnelled Courier (if applicable). This is achieved by means of the following settings, each of which can be set to UTC or Local.:

- RP1 Time Zone
- RP2 Time Zone
- DNPOE Time Zone
- Tunnel Time Zone

The **LocalTime Offset** setting allows you to enter the local time zone compensation from -12 to + 12 hours at 15-minute intervals.

5.6 Daylight Saving Time Compensation

It is possible to compensate for Daylight Saving time using the following settings

- DST Enable
- DST Offset
- DST Start
- DST Start Day
- DST Start Month
- DST Start Mins
- DST End
- DST End Day
- DST End Month
- DST End Mins

6. SETTINGS GROUP SELECTION

You can select the setting group using opto inputs, a menu selection, and for some models the hotkey menu or function keys. You can choose which method by using the Setting Group setting in the **CONFIGURATION** column. There are two possibilities; Select via Menu or Select via PSL. If you choose Select via Menu, you set the settings group using the Active Settings setting or with the hotkeys. If you choose Select via PSL, you can set the settings group with DDB signals according to the following table:

SG Select 1X	SG Select X1	Selected Setting Group
0	0	1
0	1	2
1	0	3
1	1	4

Each setting group has its own PSL. Once a PSL configuration has been designed it can be allocated to any one of the 4 setting groups. When downloading or extracting a PSL configuration, you will be prompted to enter the required setting group to which it will be allocated.

SETTINGS

CONTENTS

1.	**SETTINGS**	**3**
1.1	**Relay Settings Configuration**	**3**
1.1.1	System Data	3
1.1.2	Configuration	8
1.1.3	PU Conf & Status	12
1.1.4	Default Settings Restore	13
1.1.5	Date and Time	13
1.2	**Protection Settings**	**15**
1.2.1	Differential Protection Configuration (Diff Busbar Prot - P741)	16
1.2.2	Differential Protection Configuration	17
1.2.3	Busbar Trip (87BB) or Central Breaker Fail BackTrip Confirmation (50BF) (BB Trip Confirm menu)	20
1.2.4	Dead Zone Configuration	21
1.2.5	Non-directional Phase Overcurrent Protection	21
1.2.6	Non-Directional Earth Fault Overcurrent Protection and External Fault Detection by High-Set Overcurrent	22
1.2.7	Circuit Breaker Fail and Undercurrent Function	23
1.2.8	CT Supervision (Supervision)	24
1.3	**Control and Support Settings**	**25**
1.3.1	Circuit breaker Control	25
1.3.2	CT and VT Ratios	26
1.3.3	Record Control	27
1.3.4	Measurements (Measure’t Setup)	28
1.3.5	View Records	28
1.3.6	Communications	31
1.3.7	Commissioning Tests	36
1.3.8	Opto Configuration	40
1.3.9	Control Input Setting (Control Input)	41
1.3.10	Control Input Configuration	41
1.3.11	InterMiCOM Comm and Conf (P741/P743)	42
1.3.12	Function Keys Menu	44
1.3.13	IEC 61850 CONFIG	45
1.3.14	Control I/P (input) Labels	49
1.4	**Disturbance Recorder Settings**	**49**

1. SETTINGS

The P74x must be configured to the system and application using appropriate settings. In this chapter the settings are described in the following sequence:

- Protection setting
- Control and configuration settings
- Disturbance recorder settings

The relay is supplied with a factory-set configuration of default settings.

1.1 Relay Settings Configuration

The relay is a multi-function device that supports numerous different protection, control and communication features. To simplify the setting of the relay there is a **Configuration** settings column, which can be used to enable or disable many of the functions. The settings associated with any disabled functions do not appear in the menu. To disable a function, change the relevant cell in the **Configuration** column from **Enabled** to **Disabled**.

The **Configuration** column controls which of the four protection settings groups are selected as active through the **Active settings** cell. A protection setting group can also be disabled in the configuration column, provided it is not the present active group. Similarly, a disabled setting group cannot be set as the active group.

It is possible to copy the contents of one of the setting groups to that of another group. To do this, set the **Copy from** cell to the protection setting group to be copied, then set the **Copy** to cell to the protection group where the copy is to be placed. The copied settings are initially placed in a temporary scratchpad and are only used after they have been confirmed.

1.1.1 System Data

This menu provides information for the device and general status of the P741 relay.

Menu Text	Default Setting	Setting Range		Step Size
		Min.	Max.	
SYSTEM DATA				
Language	English			
The default language used by the device. Selectable as English, French, German, Spanish.				
Password	****			
Device default password.				
Description	MiCOM P741			
16 character relay description. Can be edited.				
Plant Reference	MiCOM			
Associated plant description and can be edited.				
Model Number	P741??????????K			
Relay model number. This display cannot be altered.				
Serial Number	6 digits + 1 letter			
Relay model number. This display cannot be altered.				
Frequency	50Hz	50Hz	60Hz	10Hz
Relay set frequency. Settable between 50 and 60Hz				
Comms. Level	2			
Displays the conformance of the relay to the Courier Level 2 comms.				

Menu Text	Default Setting	Setting Range		Step Size
		Min.	Max.	
SYSTEM DATA				
Relay Address	255	6	6	1
Fixed front and first rear port relay address.				
Plant Status	0000000000000000			
Displays the circuit breaker plant status for up to 8 circuit breakers. The P741 relay does not support any circuit breaker. Not used				
Control Status	0000000000000000			
Not used.				
Active Group	1			
Displays the active settings group.				
Software Ref. 1				
Displays the relay software version including protocol and relay model.				
Software Ref. 2				
Software Ref. 2 is displayed for a relay with IEC 61850 protocol only and displays the software version of the Ethernet card.				
Opto I/P Status	00000000			
Duplicate. Displays the status of opto inputs.				
Relay O/P Status	00000000			
Duplicate. Displays the status of output relays.				
Alarm Status 1	00000000000000000000000000000000			
32 bits field give status of first 32 alarms (refer to P74x/EN MR for alarm list).				
Alarm Status 2	00000000000000000000000000000000			
Next 32 alarm status defined.				
Alarm Status 3	00000000000000000000000000000000			
Next 32 alarm status defined. Assigned specifically for platform alarms.				
Access Level	2			
Displays the current access level. Level 0 - No password required - Read access to all settings, alarms, event records and fault records Level 1 - Password 1 or 2 required - As level 0 plus: Control commands, e.g. circuit breaker open/close Reset of fault and alarm conditions, Reset LEDs Clearing of event and fault records Level 2 - Password 2 required - As level 1 plus: All other settings				
Password Control	2			
Sets the menu access level for the relay. This setting can only be changed when level 2 access is enabled.				
Password Level 1	****			
Allows user to change password level 1.				
Password Level 2	****			
Allows user to change password level 2.				

Menu Text	Default Setting	Setting Range		Step Size
		Min.	Max.	
SYSTEM DATA				
Password Level 3	****			
Allows user to change password level 3.				
Security Feature	1			
This setting displays the level of cyber security implemented, 1 = phase 1.				
Username				
There are three Authentication methods supported by P40 Authentication framework. • Legacy Device Authentication • Device Authentication (RBAC) • Server Authentication (RBAC) Respectively, acceptable username is: • Empty • Enumeration including ADMINISTRATOR, ENGINEER, OPERATOR and VIEWER • Usernames are restricted to a maximum of 16 characters. Only uppercase A to Z and numbers 0 to 9 are permissible username characters.				
Password				
Encrypted password entry cell. Not visible via UI.				
Password Level 1				
Allows user to change Encrypted password level 1. (8 characters). Not visible via UI				
Password Level 2				
Allows user to change Encrypted password level 2. (8 characters). Not visible via UI				
Password Level 3				
Allows user to change Encrypted password level 3. (8 characters). Not visible via UI				

P742/P743

Menu Text	Default Setting	Setting Range		Step Size
		Min.	Max.	
SYSTEM DATA				
Language	English			
The default language used by the device. Selectable as English, French, German, Spanish.				
Password	****			
Device default password.				
Description	“MiCOM P742” or “MiCOM P743”			
16 character relay description. Can be edited.				
Plant Reference	MiCOM			
Associated plant description and can be edited.				

Menu Text	Default Setting	Setting Range		Step Size
		Min.	Max.	
SYSTEM DATA				
Model Number	P74???????????K			
Relay model number. This display cannot be altered.				
Serial Number	6 digits + 1 letter			
Relay model number. This display cannot be altered.				
Frequency	50Hz	50Hz	60Hz	10Hz
Relay set frequency. Settable between 50 and 60Hz.				
Comms. Level	2			
Displays the conformance of the relay to the Courier Level 2 comms.				
Relay Address	255	7	34	1
Sets the front and first rear port relay address from 7.				
Plant Status	0000000000000000			
Displays the circuit breaker plant status for up to 8 circuit breakers. The P742 and P743 relays support only a single circuit breaker configuration.				
Control Status	0000000000000000			
Not used.				
Active Group	1			
Displays the active settings group.				
CB Trip/Close	No Operation			No Operation/ Trip/Close
Supports trip and close commands if enabled in the Circuit Breaker Control menu.				
Software Ref. 1				
Displays the relay software version including protocol and relay model.				
Software Ref. 2				
Software Ref. 2 is displayed for a relay with IEC 61850 protocol only and displays the software version of the Ethernet card.				
Opto I/P Status	000000000000000000000000			
Duplicate. Displays the status of opto inputs.				
Relay O/P Status	0000000000000000			
Duplicate. Displays the status of output relays.				
Alarm Status 1	00000000000000000000000000000000			
32 bits field give status of first 32 alarms (refer to P74x/EN MR for alarm list).				
Alarm Status 2	00000000000000000000000000000000			
Next 32 alarm status defined.				
Alarm Status 3	00000000000000000000000000000000			
Next 32 alarm status defined. Assigned specifically for platform alarms.				

Menu Text	Default Setting	Setting Range		Step Size
		Min.	Max.	
SYSTEM DATA				
Access Level	2			
Displays the current access level. Level 0 - No password required - Read access to all settings, alarms, event records and fault records Level 1 - Password 1 or 2 required - As level 0 plus: Control commands, e.g. circuit breaker open/close Reset of fault and alarm conditions, Reset LEDs Clearing of event and fault records Level 2 - Password 2 required - As level 1 plus: All other settings				
Password Control	2	0	2	1
Sets the menu access level for the relay. This setting can only be changed when level 2 access is enabled.				
Password Level 1	****			
Allows user to change password level 1.				
Password Level 2	****			
Allows user to change password level 3.				
Password Level 3	****			
Allows user to change password level 3.				
Security Feature				
This setting displays the level of cyber security implemented, 1 = phase 1.				
Username				
There are three Authentication methods supported by P40 Authentication framework. • Legacy Device Authentication • Device Authentication (RBAC) • Server Authentication (RBAC) Respectively, acceptable username is: • Empty • Enumeration including ADMINISTRATOR, ENGINEER, OPERATOR and VIEWER • Usernames are restricted to a maximum of 16 characters. Only uppercase A to Z and numbers 0 to 9 are permissible username characters.				
Password				
Encrypted password entry cell. Not visible via UI				
Password Level 1				
Allows user to change password level 1. Not visible via UI				
Password Level 2				
Allows user to change password level 3. Not visible via UI				

Menu Text	Default Setting	Setting Range		Step Size
		Min.	Max.	
SYSTEM DATA				
Password Level 3				
Allows user to change password level 3. Not visible via UI				

1.1.2 Configuration

(P741)

Menu Text	Default Setting	Available Settings
CONFIGURATION		
Restore Defaults	No Operation	No Operation All Settings Setting Group 1 Setting Group 2 Setting Group 3 Setting Group 4
Setting to restore a setting group to factory default settings (see also § 1.1.3).		
Setting Group	Select via Menu	Select via Menu Select via Optos
Allows setting group changes to be initiated via Opto Input or via Menu.		
Active Settings	Group 1	Group 1, Group 2, Group 3, Group 4
Selects the active setting group.		
Save Changes	No Operation	No Operation, Save, Abort
Saves all relay settings.		
Copy from	Group 1	Group 1, 2, 3 or 4
Allows displayed settings to be copied from a selected setting group.		
Copy to	No Operation	No Operation Group 1, 2, 3 or 4
Allows displayed settings to be copied to a selected setting group (ready to paste).		
Setting Group 1	Enabled	Enabled or Disabled
If the setting group is disabled from the configuration, then all associated settings and signals are hidden, except for this setting (paste).		
Setting Group 2 (as above)	Disabled	Enabled or Disabled
Setting Group 3 (as above)	Disabled	Enabled or Disabled
Setting Group 4 (as above)	Disabled	Enabled or Disabled
Busbar Option	Invisible	Visible/Invisible
Sets the Busbar Option menu visible further on in the relay settings menu.		
Diff Busbar Prot	Enabled	Enabled or Disabled
To enable (activate) or disable (turn off) the Differential Busbar Protection function (ANSI 87BB).		
Input Labels	Visible	Invisible or Visible
Sets the Input Labels menu visible further on in the relay settings menu.		

Menu Text	Default Setting	Available Settings
Output Labels	Visible	Invisible or Visible
Sets the Output Labels menu visible further on in the relay settings menu.		
Recorder Control	Visible	Invisible or Visible
Sets the Record Control menu visible further on in the relay settings menu.		
Disturb. Recorder	Visible	Invisible or Visible
Sets the Disturbance Recorder menu visible further on in the relay settings menu.		
Measure't. Set-up	Visible	Invisible or Visible
Sets the Measurement Setup menu visible further on in the relay settings menu.		
Comms. Settings	Invisible	Invisible or Visible
Sets the Communications Settings menu visible further on in the relay settings menu. These are the settings associated with the 1st and 2nd rear communications ports.		
Commission Tests	Visible	Invisible or Visible
Sets the Commissioning Tests menu visible further on in the relay settings menu.		
Setting Values	Primary	Primary or Secondary
This affects all protection settings that are dependent upon CT and VT ratios.		
Control Inputs	Visible	Invisible or Visible
Activates the Control Input status and operation menu further on in the relay setting menu.		
Ctrl I/P Config.	Visible	Invisible or Visible
Sets the Control Input Configuration menu visible further on in the relay setting menu.		
Ctrl I/P Labels	Visible	Invisible or Visible
Sets the Control Input Labels menu visible further on in the relay setting menu.		
Direct Access	Enabled	Enabled/Disabled/Hotkey only/ CB Cntrl. only
Defines what CB control direct access is allowed. Enabled implies control via menu, hotkeys etc.		
Function Key	Visible	Invisible or Visible
Sets the Function Key menu visible further on in the relay setting menu.		
InterMiCOM	Disabled	Enabled or Disabled
To enable (activate) or disable (turn off) EIA (RS) 232 InterMiCOM (integrated teleprotection) (when option available).		
RP1 Read Only	Disabled	Enabled or Disabled
If this Read Only mode is enabled, then all setting changes and most command/control actions are blocked (not accepted by the relay) for Rear Port 1.		
RP2 Read Only	Disabled	Enabled or Disabled
If this Read Only mode is enabled, then all setting changes and most command/control actions are blocked (not accepted by the relay) for Rear Port 2 (when option available).		
NIC Read Only	Disabled	Enabled or Disabled
If this Read Only mode is enabled, then all setting changes and most command/control actions are blocked (not accepted by the relay) for the Ethernet port (when option available).		
LCD Contrast	11	0…31
Sets the LCD contrast.		

P742/P743

MENU TEXT	Default Setting	Available Settings
CONFIGURATION		
Restore Defaults	No Operation	No Operation/All Settings/Setting Group 1/ Setting Group 2/Setting Group 3/Setting Group 4
Setting to restore a setting group to factory default settings (see also § 1.1.3).		
Setting Group	Select via Menu	Select via Menu/Select via Optos
Allows setting group changes to be initiated via Opto Input or via Menu.		
Active Settings	Group 1	Group 1/Group 2/Group 3/Group 4
Selects the active setting group.		
Save Changes	No Operation	No Operation/Save/Abort
Saves all relay settings.		
Copy From	Group 1	Group 1/Group 2/Group 3/Group 4
Allows displayed settings to be copied from a selected setting group.		
Copy to	No Operation	No Operation/Group 1/Group 2 Group 3/Group 4
Allows displayed settings to be copied to a selected setting group (ready to paste).		
Setting Group 1	Enabled	Enabled/Disabled
If the setting group is disabled from the configuration, then all associated settings and signals are hidden, except for this setting (paste).		
Setting Group 2	Disabled	Enabled/Disabled
Setting Group 3	Disabled	Enabled/Disabled
Setting Group 4	Disabled	Enabled/Disabled
Dead Zone Prot	Enabled	Enabled/Disabled
To enable (activate) or disable (turn off) the Dead Zone Protection function.		
BB Trip Confirm	Disabled	Enabled/Disabled
To enable (activate) or disable (turn off) the Busbar Trip order confirmation on an overcurrent function to allow to trip the breaker.		
Overcurrent Prot	Disabled	Enabled/Disabled
To enable (activate) or disable (turn off) the Phase Overcurrent Protection function. ANSI 50P/51.		
Earth Fault Prot	Disabled	Enabled/Disabled
To enable (activate) or disable (turn off) the Earth Overcurrent Protection function. ANSI 50N/51N.		
CB Fail & I<	Disabled	Enabled/Disabled
To enable (activate) or disable (turn off) the Circuit Breaker Fail Protection functions. ANSI 50BF.		
Input Labels	Visible	Visible/Invisible
Sets the Input Labels menu visible further on in the relay settings menu.		
Output Labels	Visible	Visible/Invisible
Sets the Output Labels menu visible further on in the relay settings menu.		
CT & VT Ratios	Visible	Visible/Invisible
Sets the Current & Voltage Transformer Ratios menu visible further on in the relay settings menu.		

MENU TEXT	Default Setting	Available Settings
CONFIGURATION		
Recorder Control	Visible	Visible/Invisible
Sets the Record Control menu visible further on in the relay settings menu.		
Disturb Recorder	Visible	Visible/Invisible
Sets the Disturbance Recorder menu visible further on in the relay settings menu.		
Measure't Setup	Visible	Visible/Invisible
Sets the Measurement Setup menu visible further on in the relay settings menu.		
Comms Settings	Invisible	Visible/Invisible
Sets the Communications Settings menu visible further on in the relay settings menu.		
Commission Tests	Visible	Visible/Invisible
Sets the Commissioning Tests menu visible further on in the relay settings menu.		
Setting Values	Secondary	Primary/Secondary
This affects all protection settings that are dependent upon CT and VT ratios.		
Control Inputs	Visible	Visible/Invisible
Activates the Control Input status and operation menu further on in the relay setting menu.		
Ctrl I/P Config	Visible	Visible/Invisible
Sets the Control Input Configuration menu visible further on in the relay setting menu.		
Ctrl I/P Labels	Visible	Visible/Invisible
Sets the Control Input Labels menu visible further on in the relay setting menu.		
Direct Access	Enabled	Enabled/Disabled
Defines what CB control direct access is allowed. Enabled implies control via menu, hotkeys etc.		
InterMiCOM	Disabled	Enabled or Disabled
P741/P743 only: To enable (activate) or disable (turn off) EIA (RS) 232 InterMiCOM (integrated teleprotection) (when option available).		
Function Key	Visible	Invisible or Visible
P741/P743 only: Sets the Function Key menu visible further on in the relay setting menu.		
RP1 Read Only	Disabled	Enabled or Disabled
If this Read Only mode is enabled, then all setting changes and most command/control actions are blocked (not accepted by the relay) for Rear Port 1.		
RP2 Read Only	Disabled	Enabled or Disabled
If this Read Only mode is enabled, then all setting changes and most command/control actions are blocked (not accepted by the relay) for Rear Port 2 (when option available).		
NIC Read Only	Disabled	Enabled or Disabled
If this Read Only mode is enabled, then all setting changes and most command/control actions are blocked (not accepted by the relay) for the Ethernet port (when option available).		
LCD Contrast	11	0…31
Sets the LCD contrast.		

The aim of the configuration column is to allow general configuration from a single point in the menu. Items that are disabled or made invisible do not appear in the main relay menu.

1.1.3 PU Conf & Status

In the central unit, an additional configuration column **PU Conf & Status** is present to configure the hardware to the software topology.

P741

MENU TEXT	Default Setting	Available Settings
PU CONF & STATUS		
PU in service	0000000000000000 00000000000	0 or 1
List of the PUs in service. For example, a topology scheme may define 12 PU: 5 PU for current phase and 7 PU for future. This would be set to: 111110000000000000000000000		
PU connected	0000000000000000 00000000000	Live values
List of the PUs connected and synchronized with the CU. After reboot the CU waits for the list of connected PUs to equal the PUs in service before enabling the busbar protection. If there is a discrepancy the CU will not start, and the scheme will be locked.		
PU topo valid	0000000000000000 00000000000	Live values
List of PUs with valid topology data. After rebooting the CU checks the topology configuration on all PUs and reports the result in this cell. If there is a discrepancy the central unit will not start, and the scheme will be locked.		
Reset Circt Flt	No	Yes or No
After a circuitry fault has been detected, the user can accept and clear the error, using the command from this cell. The command will be rejected if the fault is still present.		
Circuitry Fault	00000000	Live values
List of the zones blocked by a circuitry fault		
Circ Fault Phase		Phase A or B or C or N
Faulty phase that blocks by a circuitry fault the zone		
Reset PU Error	No	Yes or No
After a PU communication error has been detected, the user can accept and clear the error, using the command from this cell. The command will NOT be rejected if the fault is still present.		
PU Error Block	00000000	Live values
List of the zones blocked for PU communication error		
87BB monitoring	00000000	Live values
List of the zones on which the differential busbar protection (87BB) is blocked		
87BB&50BF disable	00000000	Live values
List of the zones on which the differential busbar protection (87BB) AND 50BF protection are blocked		

1.1.4 Default Settings Restore

To restore the default values to the settings in any protection settings group, set the 'restore defaults' cell to the relevant group number. Alternatively, it is possible to set the 'restore defaults' cell to 'all settings' to restore the default values to all the relay's settings, not just the protection groups' settings. The default settings will initially be placed in the scratchpad and will only be used by the relay after they have been confirmed. Note that restoring defaults to all settings includes the rear communication port settings, which may result in communication via the rear port being disrupted if the new (default) settings do not match those of the master station.

1.1.5 Date and Time

Displays the date and time as well as the battery/supercapacitor* condition.

Menu Text	Default Setting	Setting Range		Step Size
		Min.	Max.	
DATE AND TIME				
Date/Time	Data			
Displays the relay's current date and time.				
IRIG-B Sync	Disabled	Disabled or Enabled		
Enable IRIG-B time synchronization (P741 only and with Irig-B option).				
IRIG-B Status	Data	Card not fitted/Card failed/ Signal healthy/No signal		
Displays the status of IRIG-B (P741 only and with IRIG-B option).				
Battery Status	Data			
Displays whether the battery is healthy or not.				
Battery Alarm	Enabled	Disabled or Enabled		
Setting that determines whether an unhealthy relay battery condition is alarmed or not.				
Primary Time Source		IRIG-B/None/PTP/SNTP, [Indexed String]		
Sets the primary time synchronization source				
Secondary Time Source	None	IRIG-B/None/PTP/SNTP, [Indexed String]		
Sets the secondary time synchronisation source				
PTP Domain Number	0	From 0 to 127 in steps of 1 [Integers]		
Assigns the PTP domain number. A domain is a grouping of PTP clocks that synchronize to each other on a network. This provides a way of implementing independent synchronization of PTP clocks on a shared network				
Act. Time Source	Data	IRIG-B/None/PTP/SNTP, [Indexed String]		
Displays the active time synchronization source being used. 'Free Running' means the IED is not synchronized with any normal time-server, including IRIG-B, PTP or SNTP. The IED relies solely on its internal clock.				
IRIG-B Status	Data	Card not fitted/Card failed/Signal Healthy/No Signal/[Indexed String]		
Displays the status of IRIG-B				

Menu Text	Default Setting	Setting Range		Step Size
		Min.	Max.	
DATE AND TIME				
PTP Status	Data	Not Master Found/Illegal Master/Valid master/[Indexed String]		
IEC61850 or DNP3.0 over Ethernet versions only. Displays the status of PTP time synchronization No Master Found = No PTP master can be found, the IED has not received a valid 'Announce' message. Illegal Master = Master clock is not valid, typically this will occur when the clock is not using the correct epoch Valid Master = At least one valid master clock is available				
SNTP Status	Data	Disabled, Trying Server 1, Trying Server 2, Server 1 OK, Server 2 OK, No response, No valid clock		
For P741 and P743 with Ethernet option only: Displays information about the SNTP time synchronization status				
LocalTime Enable	Disabled	Disabled/Fixed/Flexible		
Setting to turn on/off local time adjustments. Disabled - No local time zone will be maintained. Time synchronization from any interface will be used to directly set the master clock and all displayed (or read) times on all interfaces will be based on the master clock with no adjustment. Fixed - A local time zone adjustment can be defined using the LocalTime offset setting, and all interfaces will use local time except SNTP time synchronization and IEC61850 timestamps. Flexible - A local time zone adjustment can be defined using the LocalTime offset setting, and each interface can be assigned to the UTC zone or local time zone except for the local interfaces which will always be in the local time zone and IEC61850/SNTP which will always be in the UTC zone.				
LocalTime Offset	0	-720	720	15
Setting to specify an offset of -12 to +12 hrs in 15-minute intervals for local time zone. This adjustment is applied to the time based on the master clock which is UTC/GMT				
DST Enable	Disabled	Disabled or Enabled		
Setting to turn on/off Daylight Saving Time (DST) adjustment to local time.				
DST Offset	60mins	30	60	30min
Setting to specify daylight saving offset which will be used for the time adjustment to local time.				
DST Start	Last	First, Second, Third, Fourth, Last		
Setting to specify the week of the month in which daylight saving time adjustment starts				
DST Start Day	Sunday	Monday, Tuesday, Wednesday, Thursday, Friday, Saturday		
Setting to specify the day of the week in which daylight saving time adjustment starts				
DST Start Month	March	January, February, March, April, May, June, July, August, September, October, November, December		
Setting to specify the month in which daylight saving time adjustment starts				
DST Start Mins	60min	0	1425	15min
Setting to specify the time of day in which daylight saving time adjustment starts. This is set relative to 00:00 hrs on the selected day when the time adjustment is to start.				
DST End	Last	First, Second, Third, Fourth, Last		
Setting to specify the week of the month in which daylight saving time adjustment ends.				

Menu Text	Default Setting	Setting Range		Step Size
		Min.	Max.	
DATE AND TIME				
DST End Day	Sunday	Monday, Tuesday, Wednesday, Thursday, Friday, Saturday		
Setting to specify the day of the week in which daylight saving time adjustment ends				
DST End Month	October	January, February, March, April, May, June, July, August, September, October, November, December		
Setting to specify the month in which daylight saving time adjustment ends				
DST End Mins	60	0	1425	15min
Setting to specify the time of day in which daylight saving time adjustment ends. This is set relative to 00:00 hrs on the selected day when time adjustment is to end.				
RP1 Time Zone	Local	UTC or Local		
Setting for the rear port 1 interface to specify if the time synchronization received will be local or universal time coordinated				
RP2 Time Zone	Local	UTC or Local		
Setting for the rear port 2 interface to specify if time synchronization received will be local or universal time coordinated. This menu is available with the 2nd rear port.				
DNPOE Time Zone	Local	UTC or Local		
DNP3.0 over Ethernet versions only. Setting to specify if time synchronization received will be local or universal time coordinated.				
Tunnel Time Zone	Local	UTC or Local		
For P741 and P743 with Ethernet option only: Setting to specify if time synchronization received will be local or universal time co-ordinate when 'tunnelling' courier protocol over Ethernet.				

Note: * Battery fitted to white front panel versions, supercapacitor fitted to black and silver front panel versions. For details, refer to the Ordering Options Appendix.

1.2 Protection Settings

The protection settings include all the following items that become active when once enabled in the configuration column of the relay menu database:

P741 protection element settings:

- Differential Phase and Earth fault Protection (**Diff Busbar Prot** menu),
- Differential protection configuration (**Busbar option** menu).

P742 and P743 protection element settings:

- Busbar Trip (87BB) or Central Breaker Fail BackTrip Confirmation (50BF) (**BB Trip Confirm** menu),
- Dead Zone configuration (**Dead Zone Prot** menu),
- Non-directional Phase overcurrrent protection (**Overcurrent** menu),
- Non-Directional Earth Fault Overcurrent Protection and External Fault Detection by High-Set Overcurrent (**Earth Fault** menu),
- Circuit breaker fail and undercurrent function (**CB Fail** column),
- Supervision CTS (**Supervision** menu).

Programmable scheme logic (PSL) that also includes InterMiCOM signals mapping.

There are four groups of protection settings with each group containing the same setting cells. One group of protection settings is selected as the active group and is used by the protection elements. The settings for group 1 only are shown. The settings are in the same order in which they are displayed in the menu.

1.2.1 Differential Protection Configuration (Diff Busbar Prot - P741)

Differential Elements 87BB

The differential element has independent settings for phase and earth (sensitive) faults, which are used for all zones and the check zone independently.

1.2.1.1 Differential Phase Fault Configuration

Menu Text	Default Setting	Setting Range		Step Size
		Min.	Max.	
DIFF BUSBAR PROT				
Diff Phase Fault (Diff busbar protection menu first part).				
CZ Parameters				
Phase slope kCZ	30%	0%	90%	1%
Slope angle setting for the check zone biased differential element.				
I_DCZ>2 Current	1200 A	50 A	30.000 A	10 A
Setting that determines the minimum differential operating current for the check zone biased differential element.				
Zone Parameters				
Phase slope k2	60%	20%	90%	1%
Slope angle setting for all discriminating zone biased differential elements.				
I_D>2 Current	1000 A	50 A	30.000 A	10 A
Setting that determines the minimum differential operating current for all the discriminating zone biased differential elements.				
Common				
I_D>1 Current	100 A	10 A	500 A	10 A
Setting for the phase circuitry fault monitoring characteristic for the minimum pickup.				
Phase slope k1	10%	0%	50%	1%
Slope angle setting for the phase circuitry fault monitoring characteristic.				
I_D>1 Alarm Timer	5.0s	0.0s	600.0s	0.1s
Setting for the operating time delay of the phase circuitry fault monitoring.				

1.2.1.2 Sensitive Earth Fault Element

The sensitive earth fault element is included for high impedance earthed systems and has bias current control to guarantee stability under external faults or when there are significant errors in the measurement CTs. The element is usually disabled for effectively earthed systems with low impedance or solid earthing.

Menu Text	Default Setting	Setting Range		Step Size
		Min.	Max.	
DIFF BUSBAR PROT				
Diff Earth Fault (Diff busbar protection menu second part).				
Diff Earth Fault	Disabled	Enabled/Disabled		
To enable (activate) or disable (turn off) the differential earth fault protection function. When activated, the following functions are accessible.				
IBiasPh>Cur.	2000 A	50 A	30.000 A	10 A
Setting that determines the Earth fault element blocking characteristic.				
CZ Parameters				
Earth Slope k_NCZ	10%	0%	90%	1%
Slope angle setting for the check zone biased differential Earth element.				
I_{DN}CZ>2 Current	1200 A	10 A	30.000 A	10 A
Setting that determines the minimum differential operating current for the check zone biased differential Earth element.				
Zone Parameters				
Earth Slope k_N2	10%	0%	90%	1%
Slope angle setting for all discriminating zone biased differential Earth elements.				
I_{DN}>2 Current	1000 A	10 A	30.000 A	10 A
Setting that determines the minimum differential operating current for all the discriminating zone biased differential Earth elements.				
Common				
I_{DN}>1 Current	100 A	10 A	500 A	10 A
Setting for the Neutral circuitry fault monitoring characteristic for the minimum pickup.				
Earth slope k_N1	10%	0%	50%	1%
Slope angle setting for the Neutral circuitry fault monitoring characteristic.				
I_{DN}>1 Alarm Timer	5.0s	0.0s	600.0s	0.1s
Setting for the Neutral circuitry fault monitoring minimum pickup timer.				

1.2.2 Differential Protection Configuration

The differential element blockings and alarms can be configured to fit optimum operability; they are used for all zones and the check zone independently.

This column is visible when the **Busbar Option** setting (**Configuration** column) = “visible”.

P741

Menu Text	Default Setting	Setting Range		Step Size
		Min.	Max.	
BUSBAR OPTION				
CZ Circ Flt Mode	Alarm & No Block	AlarmSR&No Block/Alarm & No Block Self-Reset/Alarm Latched/ Blocking Latched		
Check Zone Circuitry Fault: Options for the Check Zone differential element faulty calculation due to wrong position of CB or isolator or CT failure are as follow: AlarmSR&No Block (Alarm Self Reset and No blocking): The CZ does not block any zone trip, and the alarm disappears as soon as the CZ calculation is right. Alarm & No Block (Alarm and No blocking): The CZ does not block any zone trip, and the alarm disappears only after manual reset. Self-Reset: The CZ blocks any zone trip and both the blocking, and the alarm disappear as soon as the CZ calculation is right. Alarm Latched: The CZ blocks any zone trip, the blocking disappears as soon as the CZ calculation is right, but the alarm disappears only after manual reset. Blocking Latched: The CZ blocks any zone trip and both the blocking, and the alarm disappear only after manual reset.				
Zx Circ Flt Mode	Blocking Latched	Self-Reset/Alarm Latched/ Blocking Latched/Alarm&NoBlock !!!/AlmSR&NoBlck !!!		
Zone x Circuitry Fault: Options for all the Zones differential element faulty calculation due to wrong position of CB or isolator or CT failure are as follow: Self-Reset: The Zone is blocked, and both the blocking and the alarm disappear as soon as the Zone calculation is right. Alarm Latched: The Zone is blocked, the blocking disappears as soon as the Zone calculation is right, but the alarm disappears only after manual reset. Blocking Latched: The Zone is blocked, and both the blocking and the alarm disappear only after manual reset. AlarmSR&No Blck !!! (Alarm Self Reset and No blocking): The Zone is not blocked, and alarm disappears as soon as the zone calculation is right. Alarm & No Block !!!: The Zone is not blocked, and alarm disappears only after manual reset. **The selection of "AlarmSR&No Blck !!!" or "Alarm & No Block !!!" modes is effective only if no blocking zone is selected for Check zone circuitry fault (CZ).** **When "AlarmSR&No Blck !!!" or "Alarm & No Block !!!" setting is selected, the protection will trip the related zone in case of an external trip.**				
Circuitry tReset	5.0s	0.0s	600.0s	0.1s
Setting for the reset time delay of the circuitry fault reset options				

Menu Text	Default Setting	Setting Range		Step Size
		Min.	Max.	
BUSBAR OPTION				
Circ. Block Mode	3phase Blocking	3phase Blocking/Blocking/phase		
Options for all the Zones and Check Zone differential element faulty calculation due to wrong position of CB or isolator or CT failure are as follow: 3phase Blocking: If the faulty calculation occurs on one phase only, the Zone and/or Check Zone is blocked for the 3 phases. Blocking/phase: If the faulty calculation occurs on one phase only, the Zone and/or Check Zone is blocked for this phase only.				
CZ PU Err.Mode	Alarm & No Block	AlarmSR&No Block/Alarm & No Block/ Self-Reset/Alarm Latched/Blocking Latched		
Check Zone Peripheral Unit error mode: options for the Check Zone differential element faulty calculation due to a loss of a Peripheral Unit (PU) information are as follow: AlarmSR&No Block (Alarm Self Reset and No blocking): The CZ does not block any zone trip, and the alarm disappears as soon as the CZ calculation is right. Alarm & No Block (Alarm and No blocking): The CZ does not block any zone trip, and the alarm disappears only after manual reset. Self-Reset: The CZ blocks any zone trip and both the blocking, and the alarm disappear as soon as the CZ calculation is right. Alarm Latched: The CZ blocks any zone trip, the blocking disappears as soon as the CZ calculation is right, but the alarm disappears only after manual reset. Blocking Latched: The CZ blocks any zone trip and both the blocking, and the alarm disappear only after manual reset.				
Zx PU Err.Mode	Blocking Latched	Self-Reset/Alarm Latched/Blocking Latched		
Options for all the Zones differential element faulty calculation due to a loss of a Peripheral Unit (PU) information are as follow: Self-Reset: The Zone is blocked, and both the blocking and the alarm disappear as soon as the Zone calculation is right. Alarm Latched: The Zone is blocked, the blocking disappears as soon as the Zone calculation is right, but the alarm disappears only after manual reset. Blocking Latched: The Zone is blocked, and both the blocking and the alarm disappear only after manual reset.				
PU Error Timer	5.0s	0.0s	600.0s	0.1s
Setting for the operating time delay of the PU error options.				
PU Error tReset	5.0s	0.0s	600.0s	0.1s
Setting for the reset time delay of the PU information error.				
SEF Block Alarm	Enabled	Enabled/Disabled		
Options for Sensitive Differential Earth Fault (SEF) Protection (87BB/N) **only** are as follow: Enabled: If the Sensitive Differential Earth Fault Protection (87BB/N) is blocked, the associated alarm is raised and is flashing on the front panel of the P741. Disabled: If the Sensitive Differential Earth Fault Protection (87BB/N) is blocked, the associated alarm is not raised and is not present on the front panel of the P741.				

Menu Text	Default Setting	Setting Range		Step Size
		Min.	Max.	
BUSBAR OPTION				
Confirm Reset PU	Enabled	Enabled/Disabled		
Enables or disables the PU error auto- reset.				
3ph Block-Alarm	Enabled	Enabled/Disabled		
When enabled, an alarm is displayed when one zone is blocked by a Differential Busbar Protection function (87BB).				
Delay Trip Status	Disabled	Enabled/Disabled		
Activate or deactivate a time delay before 87BB (phase differential busbar protection) trip. When activated, the settable delay time (using 'Delay Trip Timer' menu) is used to confirm the fault or to clear the fault before zone trip.				
Delay Trip Timer	0.1s	50ms	5s	10ms
'Delay Trip Timer' sets the delay time to confirm a phase differential busbar protection (87BB) trip when 'Delay Trip Status' is enabled. This delay time must be shorter than the time delay of phase circuitry fault monitoring (DIFF BUSBAR PROT/ID>1 Alarm timer' menu).				
Diff Display Min	0A	0A	500A	10A
Sets a minimum threshold to display a differential current (Measurement' column). When the differential current is less than this threshold on the 3 phases, the displayed current is forced to 0.				

1.2.3 Busbar Trip (87BB) or Central Breaker Fail BackTrip Confirmation (50BF) (BB Trip Confirm menu)

The peripheral units can be enabled to control the trip command issue by the central unit (87BB or 50BF) if a local fault threshold, either phase or earth (i.e. I>BB or I_N>BB), is exceeded.

This criterion provides additional scheme stability. Should the command proceed, and a trip be issued to the circuit breaker this element can confirm the evolution of a circuit breaker failure condition. If the element is still operated after a set time delay a breaker failure condition must exist.

P742/P743

Menu Text	Default Setting	Setting Range		Step Size
		Min.	Max.	
BB Trip Confirm				
I>BB Current Set	1.20*I_n	0.05*I_n	4.00*I_n	0.01*I_n
Setting for the minimum pickup phase fault element trip authorization.				
I_N>BB Current	0.20*I_n	0.05*I_n	4.00*I_n	0.01*I_n
Setting for the minimum pickup Earth fault element trip authorization.				

Note: I_n is the CT nominal current.

1.2.4 Dead Zone Configuration

P742/P743

Menu Text	Default Setting	Setting Range		Step Size
		Min.	Max.	
Dead Zone Prot				
I>DZ Current Set	1.20*I_n	0.05*I_n	4.00*I_n	0.01*I_n
Setting for the tripping characteristic for the minimum pickup phase dead zone element.				
I>DZ Time Delay	1.00 s	0.00 s	100.00 s	0.01 s
Setting for the minimum pickup phase dead zone element timer.				
Dead Earth Fault	Disabled	Enabled/Disabled		
Activates or deactivates the neutral dead zone protection. When activated, the following menus are displayed.				
IN>DZ Cur Set	1.20*I_n	0.05*I_n	4.00*I_n	0.01*I_n
Setting for the tripping characteristic for the minimum pickup neutral dead zone element.				
IN>DZ Time Delay	1.00 s	0.00 s	100.00 s	0.01 s
Setting for the minimum pickup neutral dead zone element timer.				

Note: I_n is the CT nominal current.

1.2.5 Non-directional Phase Overcurrent Protection

The overcurrent protection included in the P742 or P743 relay provides two stages non-directional three-phase overcurrent protection with independent time delay characteristics. All overcurrent settings apply to all three phases but are independent for each of the four stages.

The first stage of overcurrent protection has time-delayed characteristics which are selectable between inverse definite minimum time (IDMT), or definite time (DT). The second stage has definite time characteristics only.

P742/P743

Menu Text	Default Setting	Setting Range		Step Size
		Min.	Max.	
Overcurrent				
I>1 Function	Disabled	Disabled, DT, IEC S Inverse, IEC V Inverse, IEC E Inverse, UK LT Inverse, IEEE M Inverse, IEEE V Inverse, IEEE E Inverse, US Inverse, US ST Inverse		
Setting for the tripping characteristic for the first stage overcurrent element. Setting choice: Disabled, definite time (DT), IEC S(tandar) Inverse, IEC V(ery) Inverse, IEC E(xtremely) Inverse, UK L(ong) T(ime) Inverse, EUUU Moderately) inverse, IEEE V(ery) Inverse, IEEE E(xtremely) Inverse, US Inverse or US S(hort) T(ime) Inverse. The next menus are displayed according to the function choice (refer to P74x/EN GS section). When Disabled the next menu is 'I>2 Function'.				
I>1 Current Set	3.00*I_n	0.10* I_n	32.00* I_n	0.01* I_n
Pick-up setting for first stage overcurrent element.				
I>1 Time Delay	1.00s	0.00s	100.00s	0.01s
Setting for the time-delay for the definite time setting if selected for first stage element.				

Menu Text	Default Setting	Setting Range		Step Size
		Min.	Max.	
I>1 TMS	1.000	0.025	1.200	0.025
Setting for the time multiplier setting to adjust the operating time of the IEC IDMT characteristic.				
I>1 Time Dial	7.0	0.5	15.0	0.1
Setting for the time multiplier setting to adjust the operating time of the IEEE/US IDMT curves.				
I>1 Reset Char	DT	DT/Inverse		
Setting to determine the type of reset/release characteristic of the IEEE/US curves.				
I>1tReset	0.0	0.0	100.0	0.1
Setting that determines the reset/release time for definite time reset characteristic.				
I>2 Function	Disabled	Disabled/87BBP&N blocking/High Set I>2/ I>2 & 87BBP&N/87BB/P blocking/87BB/N blocking/ I>2 & 87BB/P/I>2 & 87BB/N		
Setting to enable or disable the second stage overcurrent element. The overcurrent can be used as high set overcurrent, to block the 87BB protection for phase and earth fault element (87BBP&N blocking), only the 87BB phase element (87BB/P blocking), only the 87BB Sensitive Earth Fault (SEF) element (87BB/N blocking), or a combination of the different functions.				
I>2 Current Set	20.00* I_n	0.10* I_n	32.00* I_n	0.01* I_n
Pick-up setting for second stage overcurrent element.				
I>2 Time Delay	1.00s	0.00s	100.0s	0.01s
Setting for the operating time-delay for second stage overcurrent element.				
Block Drop-Off	0.3s	0.2s	6s	0.1s
Adjusts the differential busbar protection (87BB) blocking function during drop-off time from 200ms to 6s.				

1.2.6 Non-Directional Earth Fault Overcurrent Protection and External Fault Detection by High-Set Overcurrent

The P742 and P743 relays include extra or backup non-directional earth fault protection. The earth fault element has two stages of protection. The earth fault element needs to be co-ordinated with any other protection elements on the system, to provide discriminative fault clearance. The inverse time characteristics available for earth fault protection are the same as those for the Overcurrent element.

Note: I_n is the CT nominal current.

P742/P743

Menu Text	Default Setting	Setting Range		Step Size
		Min.	Max.	
Earth Fault				
I_N>1 Function	Disabled	Disabled, DT, IEC S Inverse, IEC V Inverse, IEC E Inverse, UK LT Inverse, IEEE M Inverse, IEEE V Inverse, IEEE E Inverse, US Inverse, US ST Inverse		
Setting for the tripping characteristic for the first stage earth fault element. Setting choice: Disabled, definite time (DT), IEC S(tandar) Inverse, IEC V(ery) Inverse, IEC E(xtremely) Inverse, UK L(ong) T(ime) Inverse, EUUU Moderately) inverse, IEEE V(ery) Inverse, IEEE E(xtremely) Inverse, US Inverse or US S(hort) T(ime) Inverse. The next menus are displayed according to the function choice (refer to P74x/EN GS section). When Disabled the next menu is 'I_N>2 Function'.				

Menu Text	Default Setting	Setting Range		Step Size
		Min.	Max.	
I_N>1 Current Set	0.30*I_n	0.10*I_n	32.00*I_n	0.01*I_n
Pick-up setting for the first stage earth fault element.				
I_N>1 Time Delay	1.00s	0.00s	100.00s	0.01s
Time-delay setting for the first stage definite time element.				
I_N>1 TMS	1.000	0.025	1.200	0.025
Setting for the time multiplier setting to adjust the operating time of the IEC IDMT characteristic.				
I_N>1 Time Dial	7.0	0.5	15.0	0.1
Setting for the time multiplier setting to adjust the operating time of the IEEE/US IDMT curves.				
I_N>1 Reset Char	DT	DT/Inverse		
Setting to determine the type of reset/release characteristic of the IEEE/US curves.				
I_N>1tReset	0.0	0.0	100.0	0.1
Setting to determine the reset/release time for definite time reset characteristic.				
I_N>2 Function	Disabled	Disabled/87BBP&N blocking/High Set I>2/I>2 & 87BBP&N/87BB/P blocking/87BB/N blocking/I>2 & 87BB/P/I>2 & 87BB/N		
Setting to enable or disable the second stage definite time element. If the function is disabled, then all associated settings except for this setting, are hidden. The overcurrent can be used as high set overcurrent, to block the 87BB protection for phase and earth fault element (87BBO&N blocking), only the 87BB phase element (87BB/P blocking), only the 87BB SEF element (87BB/N blocking), or a combination of the different functions				
I_N>2 Current Set	20.00* I_n	0.10*I_n	32.00* I_n	0.01* I_n
Pick-up setting for the second stage earth fault element.				
I_N>2 Time Delay	1.00s	0.00s	10.00s	0.01s
Setting for the operating time delay for the second stage earth fault element.				
Block Drop-Off	0.3s	0.2s	6s	0.1s
Adjust the differential busbar protection (87BB) blocking function during drop-off time from 200ms to 6s.				

1.2.7 Circuit Breaker Fail and Undercurrent Function

This function consists of two-stage circuit breaker fail functions that can be initiated by:

- Internal protection element initiation
- External protection element initiation

For current-based protection, the reset condition is based on undercurrent operation to determine that the CB has opened. For the non-current based protection, the reset criteria may be selected by means of a setting for determining a CB Failure condition.

It is common practice to use low set undercurrent elements in protection relays to indicate that circuit breaker poles have interrupted the fault or load current, as required.

P742/P743

Menu Text	Default Setting	Setting Range		Step Size
		Min.	Max.	
CB FAIL				
Control by	I<	I</52a/both		
Setting which determines the elements that will reset the circuit breaker fail time protection function. Both means that 52a and current criteria must indicate open to reset the CB fail.				
I< Current Set	0.05*I_n	0.05*I_n	4.00*I_n	0.01*I_n
Setting that determines the circuit breaker fail timer reset current for overcurrent based protection circuit breaker fail initiation.				
I> Status	Disabled	Enabled/Disabled		
I> Current Set	1.2*In	0.05*I_n	4.00*I_n	0.01*I_n
IN> Current Set	0.2*In	0.05*I_n	4.00*I_n	0.01*I_n
Internal trip	Initiated by a Central Unit trip order.			
CB Fail Timer 1	0.05 s	0.00 s	10.00 s	0.01 s
Setting for the circuit breaker fail timer stage 1 for which the initiating condition must be valid.				
CB Fail Timer 2	0.20 s	0.00 s	10.00 s	0.01 s
Setting to enable or disable the second stage of the circuit breaker function.				
External trip	Initiated by an external trip order or integrated overcurrent.			
CB Fail Timer 3	0.05 s	0.00 s	10.00 s	0.01 s
Setting to enable or disable the first stage of the circuit breaker function initiated externally.				
CB Fail Timer 4	0.20 s	0.00 s	10.00 s	0.01 s
Setting to enable or disable the second stage of the circuit breaker function initiated externally.				

1.2.8 CT Supervision (Supervision)

The CT Supervision (CTS) feature operates on detection of derived zero sequence current.

Menu Text	Default Setting	Setting Range		Step Size
		Min.	Max.	
SUPERVISION				
I_0 Supervision	Sub-heading			
Error Factor K_{CE}	0.40	0.01	1	0.01
Setting for the supervision characteristic for the slope (error coefficient).				
Alarm Delay T_{CE}	5.0 s	0.0 s	10.0 s	0.1 s
Setting that determines the operating time-delay of the element upon detection of a current transformer supervision condition.				
I0 sup. blocking	87BBP&87BBN	87BBP&87BBN/None		
When IN is measured (application with a dedicated measurement CT to measure neutral current), and when discrepancies between measured and derived values are identified, the I_0 supervision can block the differential busbar protection (87BB - phase and neutral) protection or does not block any protection.				

Menu Text	Default Setting	Setting Range		Step Size
		Min.	Max.	
CT Supervision	Sub-heading			
CTS Timer alarm	5.0 s	0.1 s	10.0 s	0.1 s
Setting that determines the alarm time-delay of the element upon detection of a current transformer supervision condition (current >10% IN present in the CT and difference between the magnitude of the current measured by two phases > 50%).				

IMPORTANT NOTE: The Error Factor K_{CE} setting must not be changed.

1.3 Control and Support Settings

The control and support settings are part of the main menu and are used to configure the relays global configuration. It includes submenu settings as below and is discussed in more detail below:

- Circuit breaker control
- CT & VT ratio settings
- Record control settings
- Measurement settings
- Communications settings
- Commissioning settings
- Opto inputs and control inputs settings
- When present, InterMiCOM communication and configuration settings
- User interface (function keys, control input labels) settings

1.3.1 Circuit breaker Control

The relay includes the following options for control of a single circuit breaker:

- Local tripping and closing, via the relay menu (or hotkeys)
- Local tripping and closing, via opto-isolated inputs or hotkeys (or function keys)
- Remote tripping and closing, using the relay communications

P742/P743

Menu Text	Default Setting	Setting Range		Step Size
		Min.	Max.	
CB CONTROL				
Prot Trip Pulse	0.20s	0.05s	2.00s	0.01s
Defines the duration of the trip pulse.				
Trip Latched	Disabled	Enabled, Disabled		
Reset Trip Latch	No	Yes, No		
Latch of the trip pulse.				
CB control by	Disabled	Disabled, Local, Remote, Local + Remote, Opto, Opto + local, Opto + Remote, Opto + Remote + local		
This Setting selects the type of circuit breaker control that be used in the logic.				
Man Close Pulse	0.50s	0.10s	10.00s	0.01s
Defines the duration of the close pulse.				

Menu Text	Default Setting	Setting Range		Step Size
		Min.	Max.	
Man Trip Pulse	0.50s	0.10s	5.00s	0.01s
Defines the duration of the trip pulse.				
Man Close Delay	10.00s	0.01s	600.00s	0.01s
This defines the delay time before the close pulse is executed.				
87BB Trip Delay	0s	0s	0.400s	5ms
Sets the differential busbar protection (87BB) tripping delay time (to allow a sequential tripping of all feeders connected to the faulty zone). The trip relays outputs will be closed even if the CU trip signal is released before the end of the timer.				
CB Superv Timer	150ms	10ms	60s	5ms
Setting for the operating time delay of the phase Circuit Breaker Supervision: The CB alarm status will be displayed If both 52A and 52B are detected more than "CB Superv. Timer".				
CT in Zone Func	Isolator	Isolator, Isolator + CB		
Setting to choose if Circuit Breaker + Isolators status are taken into account for zone topology calculation or only Isolator status (default value). **Man. CB Close Cmd** DDB#120 should be mapped to the external CB Close Pulse if Circuit Breaker status is also required.				

1.3.2 CT and VT Ratios

This column is visible when the **CT & VT ratios** setting (**Configuration** column) = "visible".

P742/P743

Menu Text	Default Setting	Setting Range		Step Size
		Min.	Max.	
CT AND VT RATIOS				
Phase CT Primary	1.000A	1A	30kA	1
Sets the phase Current Transformer input primary current rating.				
Phase CT Sec'y	1.000A	1	5	4
Sets the phase Current Transformer input secondary current rating.				
RBPh/RBN	1	0.5	10	0.1
Sets the ratio between the phase lead burden and the neutral lead burden.				
Power Parameters				
Standard input	British Standard	British Standard/IEC		
Sets the Current Transformer knee point voltage when the British standard has been chosen.				
BRITISH STANDARD Knee voltage V_k	250/I_n V	100/I_n V	5000/I_n V	10/I_n V
Sets the Current Transformer knee point voltage when the British standard has been chosen.				
IEC Rated Burden VA	25 VA	5 VA	100 VA	1 VA
Sets the Current Transformer power when the IEC standard has been chosen.				
IEC Rated Burden Ohm (calculated value)	25/I_n^2 Ω	5/I_n^2 Ω	100/I_n^2 Ω	1/I_n^2 Ω
Calculated value from the Rated Burden set in VA.				

Menu Text	Default Setting	Setting Range		Step Size
		Min.	Max.	
CT AND VT RATIOS				
IEC Rated short-circuit factor K_{scc}	10	10	50	5
Sets the Current Transformer accuracy limit factor when the IEC standard has been chosen.				
Secondary R_{CT}	0.5 Ω	0.1 Ω	50.0 Ω	0.1 Ω
Sets the Current Transformer secondary resistance.				
Eff Burden Ohm	$25/I_n^2$ Ω	$1/I_n^2$ Ω	$200/I_n^2$ Ω	$1/I_n^2$ Ω
Sets the lead burden when the British standard has been chosen.				
Eff Burden VA (calculated value)	25.00 VA	0.10 VA	200.00 VA	0.01 VA
Calculated value from the Rated Burden set in Ohm.				

1.3.3 Record Control

It is possible to disable the reporting of events from all interfaces that supports setting changes. The settings that control the various types of events are in the **RECORD CONTROL** column. The effect of setting each to disabled is as follows:

This column is visible when the **Record Control** setting **CONFIGURATION** column = **visible**.

Menu Text	Default Setting	Available Settings
RECORD CONTROL		
Clear Event	No	No or Yes
Selecting "Yes" will cause the existing event log to be cleared and an event will be generated indicating that the events have been erased.		
Clear Faults	No	No or Yes
Selecting "Yes" will cause the existing fault records to be erased from the relay.		
Clear Maint.	No	No or Yes
Selecting "Yes" will cause the existing maintenance records to be erased from the relay.		
Alarm Event	Enabled	Enabled or Disabled
Disabling this setting means that all the occurrences that produce an alarm will result in no event being generated.		
Relay O/P Event	Enabled	Enabled or Disabled
Disabling this setting means that no event will be generated for any change in logic input state.		
Opto Input Event	Enabled	Enabled or Disabled
Disabling this setting means that no event will be generated for any change in logic input state.		
General Event	Enabled	Enabled or Disabled
Disabling this setting means that no General Events will be generated.		
Fault Rec. Event	Enabled	Enabled or Disabled
Disabling this setting means that no event will be generated for any fault that produces a fault record.		
Maint. Rec. Event	Enabled	Enabled or Disabled

Menu Text	Default Setting	Available Settings
RECORD CONTROL		
Disabling this setting means that no event will be generated for any occurrence that produces a maintenance record.		
Protection Event	Enabled	Enabled or Disabled
Disabling this setting means that any operation of protection elements will not be logged as an event.		
Clear Dist Recs	No	No or Yes
Selecting "Yes" will cause the existing disturbance records to be cleared and an event will be generated indicating that the disturbance records have been erased.		
DDB 31 - 0	11111111111111111111111111111111	
Displays the status of DDB signals 0 - 31.		
DDB 2047 - 2016	11111111111111111111111111111111	
Displays the status of DDB signals 2016 - 2047.		

1.3.4 Measurements (Measure't Setup)

This column is visible when the **Measure't Setup** setting in the **Configuration** column is **visible**.

Menu Text	Default Setting	Available Settings
MEASUREMENT SETUP		
Default Display	Description	Description/Plant Reference/Idiff CZ/Ibias CZ/ Date and Time
This setting can be used to select the default display from a range of options, note that it is also possible to view the other default displays whilst at the default level using the **left** and **right** keys. However, once the 15 minute timeout elapses the default display will revert to that selected by this setting.		
Local Values	Primary	Primary/Secondary
This setting controls whether measured values via the front panel user interface and the front courier port are displayed as primary or secondary quantities.		
Remote Values	Primary	Primary/Secondary
This setting controls whether measured values via the rear communication port are displayed as primary or secondary quantities.		
Remote2 Values	Primary	Primary/Secondary
As above for the 2nd rear port (when available)		

1.3.5 View Records

This menu provides information on fault and maintenance records. The relay will record the last 5 fault records and the last 10 maintenance records.

P741

VIEW RECORDS LCD Reference	Description
Select Event	Setting range from 0 to 511. This selects the required event record from the possible 512 that may be stored. A value of 0 corresponds to the latest event and so on.
Menu Cell Ref	This cell indicates the type of event.
Time & Date	Time & Date Stamp for the event given by the internal Real Time Clock.

VIEW RECORDS LCD Reference	Description
Event Text	Up to 16 Character description of the Event refer to following sections).
Event Value	Up to 32 Bit Binary Flag or integer representative of the Event (refer to following sections).
Select Fault	Setting range from 0 to 4. This selects the required fault record from the possible 5 that may be stored. A value of 0 corresponds to the latest fault and so on.
	The following cells show all the fault flags, protection starts, protection trips, fault location, measurements etc. associated with the fault, i.e. the complete fault record.
Active Group	Active group when fault recorder starts.
Faulted Phase	Phase initiating fault recorder starts.
Start Elements	Note relevant for CU.
Trip Elements	Trip 87BB zone x, Trip 87BB block zone x, Trip 50BF zone x, Trip 50BF block zone, Dead Zone signal, Manual trip zone.
Time Stamp	Time and date of fault recorder start
Fault Alarms	Yes, No
System Frequency	50.00 Hz, 60.00 Hz,
Fault duration	- if fault detected by differential protection => delay between first detection of differential current and disappearance of differential current. - if breaker failure order received from PU => delay between reception of order and disappearance of the current.
IA diff	Differential current of the check zone.
IB diff	Differential current of the check zone.
IC diff	Differential current of the check zone.
IN diff	Differential current of the check zone.
IA bias	Differential current of the check zone.
IB bias	Bias current of the check zone.
IC bias	Bias current of the check zone.
IN bias	Bias current of the check zone.
Trip Zone	Zone where fault is detected.
Scheme Topology	Zone linked to current nodes (for the 8 nodes).
Scheme Topology	CT linked to current nodes (for the 8 nodes).
Select Maint.	Setting range from 0 to 9. This selects the required maintenance report from the possible 10 that may be stored. A value of 0 corresponds to the latest report and so on.
Maint. Text	Up to 16 Character description of the occurrence (refer to following sections).
Maint. Type/Main Data	These cells are numbers representative of the occurrence. They form a specific error code which should be quoted in any related correspondence to Report Data.
Evt Iface Source	Interface on which the event was logged.
Evt Acess Level	Any security event that indicates that it came from an interface action, such as disabling a port, will also record the access level of the interface that initiated the event. This will be recorded in the 'Event State' field of the event.
Evt Extra Info	This cell provides supporting information for the event and can vary between the different event types.

VIEW RECORDS LCD Reference	Description
Evt Unique Id	Each event will have a unique event id. The event id is a 32 bit unsigned integer that is incremented for each new event record and is stored in the record in supercapacitor backed memory (BBRAM). The current event id must be non-volatile to preserve it during power cycles; thus, it too will be stored in BBRAM. The event id will wrap back to zero when it reaches its maximum (4,294,967,295). The event id will be used by PC based utilities when organising extracted logs from IED's.
Reset Indication	Either Yes or No. This serves to reset the trip LED indications provided that the relevant protection element has reset, to reset all LED and relays latched in the PSL, and to reset the latched alarms.

P742/P743

VIEW RECORDS LCD Reference	Description
Select Event	Setting range from 0 to 511. This selects the required event record from the possible 512 that may be stored. A value of 0 corresponds to the latest event and so on.
Menu Cell Ref	This cell indicates the type of event.
Time & Date	Time & Date Stamp for the event given by the internal Real Time Clock.
Event Text	Up to 16 Character description of the Event refer to following sections).
Event Value	Up to 32 Bit Binary Flag or integer representative of the Event (refer to following sections).
Select Fault	Setting range from 0 to 4. This selects the required fault record from the possible 5 that may be stored. A value of 0 corresponds to the latest fault and so on.
	The following cells show all the fault flags, protection starts, protection trips, fault location, measurements etc. associated with the fault, i.e. the complete fault record.
Active Group	Active group when fault recorder starts
Faulted Phase	Phase initiating fault recorder starts
Tripped Phase	Phase tripped
Start Elements	Start I>1, Start I>2, Start I>2BB, Start I>BB, Start IN>1, Start IN>2, Start IN>2BB, Start IN>BB
Trip Elements	Trip I>1, Trip I>2, Trip IN>1, Trip IN>2, Trip 87BB, Trip CBFail tBF1, Trip CBFail tBF2, Trip CBFail tBF3, Trip CBFail tBF4, Trip 50BF (CU), Manual Trip zone, Trip 87BB block, Dead Zone Trip
Time Stamp	Time and date of fault recorder start
Fault Alarms	Yes, No
System Frequency	50.00 Hz, 60.00 Hz,
Relay Trip Time	Delay between reception of signal and end of trip on PU
IA	Feeder phase A current
IB	Feeder phase B current
IC	Feeder phase C current
IN	Feeder phase N current

VIEW RECORDS LCD Reference	Description
Select Maint.	Setting range from 0 to 9. This selects the required maintenance report from the possible 10 that may be stored. A value of 0 corresponds to the latest report and so on.
Maint. Text	Up to 16 Character description of the occurrence (refer to following sections).
Maint. Type/Main Data	These cells are numbers representative of the occurrence. They form a specific error code which should be quoted in any related correspondence to Report Data.
Evt Iface Source	Interface on which the event was logged.
Evt Acess Level	Any security event that indicates that it came from an interface action, such as disabling a port, will also record the access level of the interface that initiated the event. This will be recorded in the 'Event State' field of the event.
Evt Extra Info	This cell provides supporting information for the event and can vary between the different event types.
Evt Unique Id	Each event will have a unique event id. The event id is a 32 bit unsigned integer that is incremented for each new event record and is stored in the record in supercapacitor backed memory (BBRAM). The current event id must be non-volatile to preserve it during power cycles; thus, it too will be stored in BBRAM. The event id will wrap back to zero when it reaches its maximum (4,294,967,295). The event id will be used by PC based utilities when organising extracted logs from IED's.
Reset Indication	Either Yes or No. This serves to reset the trip LED indications provided that the relevant protection element has reset, to reset all LED and relays latched in the PSL, and to reset the latched alarms.

For extraction from a remote source via communications, refer to the SCADA Communications section, where the procedure is fully explained.

1.3.6 Communications

The communications settings apply to the rear communications port. Further details are given in the SCADA communications section (P74x/EN SC).

These settings are available in the **Communications** column and are displayed when the **Comms Settings** setting in the **Configuration** column is **visible**.

Menu Text	Default Setting	Setting Range		Step Size
		Min.	Max.	
COMMUNICATIONS				
RP1 Protocol	Courier			
Indicates the communications protocol that will be used on the rear communications port.				
RP1 Address (P741)	6	6	6	0
RP1 Address (P742/3)	255	7	34	1
This cell sets the unique address for the relay such that only one relay is accessed by master station software.				
RP1 InactivTimer	15 mins.	1 min.	30 mins.	1 min.
This cell controls how long the relay will wait without receiving any messages on the rear port before it reverts to its default state, including resetting any password access that was enabled.				
Baud Rate	19200 bits/s	0	2	1
Defines the period of inactivity before IED reverts to its default state.				

Menu Text	Default Setting	Setting Range		Step Size
		Min.	Max.	
Baud Rate	19200 bits/s	0	1	1
Baud Rate	19200 bits/s	0	1	1
Parity	None	0	2	1
Parity	None	0	2	1
Measure't Period	10	1	60	1
IEC 60870-5-103 versions only. This cell controls the time interval that the IED will use between sending measurement data to the master station.				
Physical Link	RS485			
This cell defines whether an electrical EIA(RS) 485 or fibre optic connection is being used for communication between the master station and IED. This cell is only visible if a fibre optic board is fitted.				
Time Sync	Disabled			
DNP3.0 versions only. If set to Enabled the master station can be used to synchronize the time on the IED. If set to Disabled either the internal free running clock or IRIG-B input are used.				
CS103 Blocking	Disabled	Disabled/Monitor Blocking/Command Blocking		
IEC 60870-5-103 versions only. There are three settings associated with this cell: Disabled - No blocking selected. Monitor Blocking - When the monitor blocking DDB Signal is active high, either by energizing an opto input or control input, reading of the status information and disturbance records is not permitted. When in this mode the IED returns a “termination of general interrogation” message to the master station. Command Blocking - When the command blocking DDB signal is active high, either by energizing an opto input or control input, all remote commands will be ignored (i.e. CB Trip/Close, change setting group etc.). When in this mode the IED returns a “negative acknowledgement of command” message to the master station.				
RP1 Card Status		KBus OK or EIA(RS)485 OK		
Displays the status of the card in RP1.				
RP1 Port Config.	KBus	KBus or EIA(RS)485		
This cell defines whether an electrical KBus or EIA(RS)485 is being used for communication between the master station and relay.				
RP1 Comms. Mode	IEC60870 FT1.2 Frame	IEC60870 FT1.2 Frame or 10-Bit No Parity		
If RP1 Port Config. = EIA(RS)485: The choice is either IEC60870 FT1.2 for normal operation with 11-bit modems, or 10-bit no parity.				
RP1 Baud Rate	19200 bits/s	9600 bits/s, 19200 bits/s or 38400 bits/s		
If RP1 Port Config. = EIA(RS)485: This cell controls the communication speed between relay and master station. It is important that both relay and master station are set at the same speed setting.				
Meas Scaling	Primary			
DNP 3.0 versions only. Setting to report analogue values in terms of primary, secondary or normalized (with respect to the CT/VT ratio setting) values.				

Menu Text	Default Setting	Setting Range		Step Size
		Min.	Max.	
Message Gap (ms)	0	Message Gap (ms) [Courier Number (time-milliseconds)]		
DNP 3.0 versions only. This setting allows the master station to have an interframe gap.				
NIC Protocol	IEC 61850			
The NIC (Network Interface Cards) protocol cell Indicates that IEC 61850 will be used on the rear Ethernet port.				
NIC MAC Address	*Ethernet MAC Address*			
Indicates the MAC (Media Access Control) address of the rear Ethernet port. This address is formatted as a six-byte hexadecimal number and is unique.				
NIC Tunl Timeout	5 mins	1 min	30 mins	1 min
Duration of time waited before an inactive tunnel to S1 Agile is reset.				
NIC Link Report	Alarm	Alarm, Event, None		
Configures how a failed/unfitted network link (copper or fiber) is reported: Alarm - an alarm is raised for a failed link Event - an event is logged for a failed link None - nothing reported for a failed link				
NIC Protocol	IEC 61850			
The NIC (Network Interface Cards) protocol cell Indicates that IEC 61850 will be used on the rear Ethernet port.				
IP Address				
IEC 61850 versions only. When IP From HMI is enabled, this is used to set the unique network IP address that identifies the unit.				
Subnet Mask				
IEC 61850 versions only. When IP From HMI is enabled, this is used to set the subnetwork mask.				
NIC MAC Address	Ethernet MAC Address			
IEC 61850 versions only. Indicates the MAC address of the rear Ethernet port.				
Gateway	0.0.0.0			
Displays the IP address of the gateway (proxy) that the relay is connected to.				
DNP Time Sync	Disabled	Disabled/Enabled		
DNP 3.0 over Ethernet versions only. If set to 'Enabled' the DNP3.0 master station can be used to synchronize the time on the IED. If set to 'Disabled' either the internal free running clock, or IRIG-B input are used.				
Meas Scaling	Primary	Normalised/Primary/Secondary		
DNP 3.0 over Ethernet versions only. Setting to report analogue values in terms of primary, secondary or normalized (with respect to the CT/VT ratio setting) values.				
NIC Tunl Timeout	5	1	30	1
DNP 3.0 over Ethernet versions only. Duration of time waited before an inactive tunnel to MiCOM S1 Agile is reset.				

Menu Text	Default Setting	Setting Range		Step Size
		Min.	Max.	
NIC Link Report	Alarm	Alarm/Event/None		
DNP 3.0 over Ethernet versions only. Configures how a failed/unfitted network link (copper or fibre) is reported: Alarm - an alarm is raised for a failed link. Event - an event is logged for a failed link. None - nothing reported for a failed link.				
NIC Link Timeout	60	0.1	60	0.1
SNMP PARAMETERS				
SNTP Server 1	0.0.0.0			
Displays the IP address of the primary SNTP server.				
SNTP Server 2	0.0.0.0			
Displays the IP address of the primary SNTP server.				
SNTP Poll Rate	64			
DNP 3.0 over Ethernet versions only. Duration of SNTP poll rate in seconds.				
SYSLOG				
SysLog Pri IP	0.0.0.0			
External Security Log Server 1 configured to monitor security logging message on the network. Setting this cell to 0.0.0.0 disables sending security logging message to Security Log Server 1.				
SysLog Sec IP	0.0.0.0			
External Security Log Server 2 configured to monitor security logging message on the network. Setting this cell to 0.0.0.0 disables sending security logging message to Security Log Server 2.				
SysLog Port	514			
The destination UDP/IP port sent to both Primary and Secondary Syslog servers.				
SysLog Status	Disabled	Disabled/Enabled		
SNMP PARAMETERS				
SNMP Version	V2C and V3	None/V2C/V3/V2C and V3		
Selection for the main processor SNMP version interface. Selecting 'None' disables this SNMP interface.				
Trap Dest. IP 1	0.0.0.0	From 0.0.0.0 to 223.255.255.255 in steps of 1		
Trap destination 1 IP for the main processor SNMP version interface. This is set to the SNMP manager IP address. Setting this cell to 0.0.0.0 disables this Trap interface.				
Trap Dest. IP 2	0.0.0.0	From 0.0.0.0 to 223.255.255.255 in steps of 1		
Trap destination 2 IP for the main processor SNMP version interface. This is set to the SNMP manager IP address. Setting this cell to 0.0.0.0 disables this Trap interface.				

Menu Text	Default Setting	Setting Range		Step Size
		Min.	Max.	
SNMPv3 Security				
SNMP v3 specific parameters heading.				
User Name	ReadOnlyUserName	From 32 to 234 in steps of 1		
SNMP v3 username. Can be edited to a custom value of up to 16 characters.				
Security Level	AuthNoPriv	NoAuthNoPriv/AuthNoPriv/AuthPriv		
Sets the SNMP v3 security level. The levels of security are defined by the SNMP standard: 0 - Without authentication and without privacy (noAuthNoPriv) 1 - With authentication but without privacy (AuthNoPriv) 2 - With authentication and with privacy (AuthPriv) Authentication is used to check the identity of users; privacy allows for encryption of SNMP messages.				
Auth Protocol	HMAC-MD5-96	HMAC-MD5-96/HMAC-SHA-96		
SNMP v3 Authentication Protocol. Sets the hash-based message authentication code function used for the authentication of messages. MD5 - Is a Message Digest implementation SHA - Is a Secure Hash Algorithm implementation SHA is considered cryptographically stronger than MD5 but takes a longer time to compute. Both implementations are considered secure. The SNMP Manager and the IED must use the same Authentication Protocol.				
Auth Password	AAAAAAAA	4 registers for writing 8-character password Each register contains a pair of characters Each register is formatted as follows: - First character of a pair - Second character of a pair Each character is in the Courier range 33 - 122		
SNMP v3 authentication password. Can be edited to a custom value with a fixed length of 8 characters.				
Encrypt Protocol	CBC-DES	CBC-DES		
SNMP v3 encryption protocol. Cannot be changed.				
Encrypt Password	BBBBBBBB	4 registers for writing 8-character password Each register contains a pair of characters Each register is formatted as follows: - First character of a pair - Second character of a pair Each character is in the Courier range 33 - 122		
SNMP v3 encryption password used for privacy. Can be edited to a custom value with a fixed length of 8 characters.				
SNMPv2c Security				
SNMP v2c specific parameters heading.				

Menu Text	Default Setting	Setting Range		Step Size
		Min.	Max.	
Community Name	CCCCCCCC	4 registers for writing 8-character password Each register contains a pair of characters Each register is formatted as follows: - First character of a pair - Second character of a pair Each character is in the Courier range 33 - 122		
SNMP v2c community name, used for authentication between the SNMP manager and the IED. Can be edited to a custom value of 1-8 characters. The community name setting must be the same in both the SNMP Manager and the IED.				
REAR PORT2 (RP2)				
RP2 Protocol	Courier			
Indicates the communications protocol that will be used on the rear communications port.				
RP2 Card Status	data	Unsupported, Card Absent, IEC60870 on RS232 OK, IEC60870 on RS485 OK or KBus OK		
This cell indicates the status of the rear communication board.				
RP2 Port Config	RS232	EIA(RS)232, EIA(RS)485 or KBus		
This cell defines whether an electrical EIA(RS)232, EIA(RS)485 or KBus is being used for communication.				
RP2 Comms Mode	IEC60870 FT1.2 Frame	IEC60870 FT1.2 Frame or 10-Bit No Parity		
The choice is either IEC60870 FT1.2 for normal operation with 11-bit modems, or 10-bit no parity.				
RP2 Address	255	0	255	1
This cell sets the unique address for the relay such that only one relay is accessed by master station software.				
RP2 InactivTimer	15 mins.	1 min.	30 mins.	1 min.
This cell controls how long the relay will wait without receiving any messages on the rear port before it reverts to its default state, including resetting any password access that was enabled.				
RP2 Baud Rate	19200 bits/s	9600 bits/s, 19200 bits/s or 38400 bits/s		
This cell controls the communication speed between relay and master station. It is important that both relay and master station are set at the same speed setting.				

1.3.7 Commissioning Tests

To help minimise the time required to test relays the relay provides several test facilities under the **COMMISSION TESTS** menu heading.

There are menu cells which allow the status of the opto-isolated inputs, output relay contacts, internal digital data bus (DDB) signals and user-programmable LEDs to be monitored. Additionally, there are cells to test the operation of the output contacts, user-programmable LEDs.

This column is visible when the **Commission Tests** setting in the **Configuration** column is set to **visible**.

P741

Menu Text	Default Setting	Available Settings
COMMISSION TESTS		
Opto I/P Status	00000000	
This menu cell displays the status of the relay's opto-isolated inputs as a binary string, a '1' indicating an energized opto-isolated input and a '0' a de-energized one.		
Relay O/P Status	00000000	
This menu cell displays the status of the digital data bus (DDB) signals that result in energisation of the output relays as a binary string, a '1' indicating an operated state and '0' a non-operated state. When the 'Test Mode' cell is set to 'Enabled', the 'Relay O/P Status' cell does not show the current status of the output relays and hence can not be used to confirm operation of the output relays. Therefore, it will be necessary to monitor the state of each contact in turn.		
Test Port Status	00000000	
This menu cell displays the status of the eight digital data bus (DDB) signals that have been allocated in the 'Monitor Bit' cells.		
LED Status	00000000	
This menu cell displays the status of the LEDs. that have been allocated in the 'Monitor Bit' cells, a '1' indicating a particular LED is lit and a '0' not lit.		
Monitor Bit 1	Relay Label 01	0 to 2047 See PSL section for details of digital data bus signals
The eight 'Monitor Bit' cells allow the user to select the status of which digital data bus signals can be observed in the 'Test Port Status' cell or via the monitor/download port.		
Monitor Bit 8	Relay Label 08	0 to 2047
The eight 'Monitor Bit' cells allow the user to select the status of which digital data bus signals can be observed in the 'Test Port Status' cell or via the monitor/download port.		
IED Test Mode	Disabled	Disabled /Out of Service
The IED Test Mode menu cell is used to allow secondary injection testing to be performed on a Peripheral Unit relay without operation of the connected zone. It also enables a facility to directly test the output contacts by applying menu controlled test signals. To select test mode the Test Mode menu cell should be set to 'Out of Service', which takes the relay out of service. It also causes an alarm condition to be recorded and the yellow 'Out of Service' LED to illuminate and an alarm message 'Out of Service' is given. The differential busbar protection (87BB) and 50BF protection are in service if the cells '87BB Monitoring' and '87BB&50BF disabl' are equal to 0. Once testing is complete the cell must be set back to 'Disabled' to restore the relay back to service.		
Test Pattern	00000000	0 = Not Operated 1 = Operated
Visible when "Test Mode" is disabled. This cell is used to select the output relay (or high break relay) contacts that will be tested when the 'Contact Test' cell is set to 'Apply Test'.		

Menu Text	Default Setting	Available Settings
COMMISSION TESTS		
Contact Test	No Operation	No Operation, Apply Test, Remove Test
Visible when "Test Mode" is disabled. When the 'Apply Test' command in this cell is issued the contacts set for operation (set to '1') in the 'Test Pattern' cell change state. After the test has been applied the command text on the LCD will change to 'No Operation' and the contacts will remain in the Test State until reset issuing the 'Remove Test' command. The command text on the LCD will again revert to 'No Operation' after the 'Remove Test' command has been issued. **Note:** When the 'Test Mode' cell is set to 'Enabled' the 'Relay O/P Status' cell does not show the current status of the output relays and hence can not be used to confirm operation of the output relays. Therefore it will be necessary to monitor the state of each contact in turn.		
Test LEDs	No Operation	No Operation Apply Test
When the 'Apply Test' command in this cell is issued the eighteen user-programmable LEDs will illuminate for approximately 2 seconds before they extinguish and the command text on the LCD reverts to 'No Operation'.		
87BB Monitoring	All bits set to 0 Each bit represents 1 zone	0 = In Service 1 = 87BB blocked
This cell is used to select the zone on which the differential busbar protection (87BB) will be disabled.		
87BB&50BF disabl	All bits set to 0 Each bit represents 1 zone	0 = In Service 1 = 87BB and 50BF blocked
Visible when "Test Mode" is disabled. This cell is used to select the zone on which the differential busbar (87BB) AND 50BF protections will be disabled.		
87BB Trip Pattern	00000000	0 = In Service 1 = Out of Service
Visible when "Test Mode" is disabled. This cell is used to select the zone that will be tested when the 'BB Trip Command' cell is set to 'Apply Test'.		
87BB Trip Order	No Operation	No Operation/Apply Test/Remove Test
Visible when "Test Mode" is disabled. When the 'Apply Test' command in this cell is issued the Central Unit sends the trip orders for the zone(s) set for operation (set to '1') in the 'BB Trip Pattern' cell change state. After the test has been applied the command text on the LCD will change to 'No Operation' and the trip command will remain in the Test State until reset issuing the 'Remove Test' command. The command text on the LCD will again revert to 'No Operation' after the 'Remove Test' command has been issued.		
Red LED Status	000000000000000000	
This cell is an eighteen bit binary string that indicates which of the user-programmable LEDs on the relay are illuminated with the Red LED input active when accessing the relay from a remote location, a '1' indicating a particular LED is lit and a '0' not lit.		
Green LED Status	000000000000000000	
This cell is an eighteen bit binary string that indicates which of the user-programmable LEDs on the relay are illuminated with the Green LED input active when accessing the relay from a remote location, a '1' indicating a particular LED is lit and a '0' not lit.		
IED Mod/Beh	ON/ON-blocked/Test/Test-blocked/Off	
Indicates the current Mod/Beh status of whole IED.		
Subscriber Sim	Disabled	Disabled, Enabled
Used to enable/disable the 'subscriber simulation' feature, for Sampled Values and GOOSE subscriptions.		

Menu Text	Default Setting	Available Settings
COMMISSION TESTS		
DDB 31 - 0	11111111111111111111111111111111	
Displays the status of DDB signals 0 - 31.		
DDB 2047 - 2016	11111111111111111111111111111111	
Displays the status of DDB signals 2016 - 2047.		

P742/P743

Menu Text	Default Setting	Available Settings
COMMISSION TESTS		
Opto I/P Status	000000000000000000000000	
This menu cell displays the status of the relay's opto-isolated inputs as a binary string, a '1' indicating an energized opto-isolated input and a '0' a de-energized one.		
Relay O/P Status	0000000000000000	
This menu cell displays the status of the digital data bus (DDB) signals that result in energisation of the output relays as a binary string, a '1' indicating an operated state and '0' a non-operated state. When the **Test Mode** cell is set to **Enabled**, the **Relay O/P Status** cell does not show the current status of the output relays and hence can not be used to confirm operation of the output relays. Therefore, it will be necessary to monitor the state of each contact in turn.		
Test Port Status	00000000	
This menu cell displays the status of the eight digital data bus (DDB) signals that have been allocated in the 'Monitor Bit' cells.		
LED Status (P742 only)	00000000	
This menu cell displays the status of the LEDs. that have been allocated in the 'Monitor Bit' cells, a '1' indicating a particular LED is lit and a '0' not lit.		
Monitor Bit 1	Relay Label 01	0 to 2047 See PSL section for details of digital data bus signals
The eight 'Monitor Bit' cells allow the user to select the status of which digital data bus signals can be observed in the 'Test Port Status' cell or via the monitor/download port.		
Monitor Bit 8	Relay Label 08	0 to 2047
The eight 'Monitor Bit' cells allow the user to select the status of which digital data bus signals can be observed in the 'Test Port Status' cell or via the monitor/download port.		
IED Test Mode	Disabled	Disabled/IO Disable/Out of Service
The IED Test Mode menu cell is used to ease the maintenance of another feeder relay or to allow secondary injection testing to be performed on the relay without operation of the connected zone. It also enables a facility to directly test the output contacts by applying menu controlled test signals. To select a test mode the IED Test Mode menu cell should be set to 'IO Disable', which blocks the breaker failure function or to 'Out of Service' which allows the complete test of the relay. It also causes an alarm condition to be recorded and the yellow 'Out of Service' LED to illuminate and an alarm message 'IO Disable' or 'Out of Service' is given. Once testing is complete the cell must be set back to 'Disabled' to restore the relay back to service.		
Test Pattern	00000000000000000000	0 = Not Operated 1 = Operated
Visible when "IED Test Mode" is disabled. This cell is used to select the output relay (or high break relay) contacts that will be tested when the 'Contact Test' cell is set to 'Apply Test'.		

Menu Text	Default Setting	Available Settings
COMMISSION TESTS		
Contact Test	No Operation	No Operation, Apply Test, Remove Test
Visible when "IED Test Mode" is disabled. When the 'Apply Test' command in this cell is issued the contacts set for operation (set to '1') in the 'Test Pattern' cell change state. After the test has been applied the command text on the LCD will change to 'No Operation' and the contacts will remain in the Test State until reset issuing the 'Remove Test' command. The command text on the LCD will again revert to 'No Operation' after the 'Remove Test' command has been issued. **Note:** When the **IED Test Mode** cell is set to **Enabled** the **Relay O/P Status** cell does not show the current status of the output relays and hence can not be used to confirm operation of the output relays. Therefore it will be necessary to monitor the state of each contact in turn.		
Test LEDs	No Operation	No Operation Apply Test
When the 'Apply Test' command in this cell is issued the eighteen user-programmable LEDs will illuminate for approximately 2 seconds before they extinguish and the command text on the LCD reverts to 'No Operation'.		
Position Pattern	0000000	0 = To Force Opened 1 = To Force Closed
This cell is used to select the forced position of the isolators and the circuit breaker when the 'IED Test Mode' is 'Out of Service'. The advised position is Opened for all the isolators and the circuit breaker, the position closed should be used only for the isolators connected to a transfer bus.		
Red LED Status (P743 only)	000000000000000000	
This cell is an eighteen bit binary string that indicates which of the user-programmable LEDs on the relay are illuminated with the Red LED input active when accessing the relay from a remote location, a '1' indicating a particular LED is lit and a '0' not lit.		
Green LED Status (P743 only)	000000000000000000	
This cell is an eighteen bit binary string that indicates which of the user-programmable LEDs on the relay are illuminated with the Green LED input active when accessing the relay from a remote location, a '1' indicating a particular LED is lit and a '0' not lit.		
DDB 31 - 0	11111111111111111111111111111111	
Displays the status of DDB signals 0 - 31.		
DDB 2047 - 2016	11111111111111111111111111111111	
Displays the status of DDB signals 2016 - 2047.		

1.3.8 Opto Configuration

Menu Text	Default Setting	Available Setting
OPTO CONFIG.		
Global Nominal V	48/54V	24/27V, 30/34V, 48/54V, 110/125V, 220/250V, Custom
Sets the nominal battery voltage for all opto inputs by selecting one of the five standard ratings in the Global Nominal V settings. If Custom is selected, then each opto input can individually be set to a nominal voltage value.		
Opto Input 1	48/54V	24/27V, 30/34V, 48/54V, 110/125V, 220/250V
Each opto input can individually be set to a nominal voltage value if custom is selected for the global setting.		

Menu Text	Default Setting	Available Setting
Opto Input 2 - 8 (P741) Opto Input 2 - 16 (P742) Opto Input 2 - 24 (P743)	48/54V	24/27V, 30/34V, 48/54V, 110/125V, 220/250V
Each opto input can individually be set to a nominal voltage value if custom is selected for the global setting.		

1.3.9 Control Input Setting (Control Input)

The P74x offers 32 control inputs which can be set or reset locally or remotely.

This column is visible when the **Control Inputs** setting in the **CONFIGURATION** column is set to **visible**.

Menu Text	Default Setting	Available Setting
CTRL INPUTS		
Ctrl I/P Status	00000000000000000000000000000000	
Displays the status of the opto inputs: “0” = Reset and “1” = Set. The control inputs can also be set and reset by setting a “1” to set or “0” to reset a control input.		
Control Input 1	No Operation	Set/Reset/No Operation
Sets or resets control input 1.		
Control Input 2 to 32	No Operation	Set/Reset/No Operation
Sets or resets control inputs 2 to 32 individually.		

1.3.10 Control Input Configuration

The control inputs function as software switches that can be set or reset either locally or remotely. These inputs can be used to trigger any function that they are connected to as part of the PSL.

This column is visible when the **Control I/P Config** setting in the **CONFIGURATION** column is set to **visible**.

Menu Text	Default Setting	Available Setting
CTRL I/P CONFIG.		
Hotkey Enabled	11111111111111111111111111111111	
Setting to allow the control inputs to be individually assigned to the “Hotkey” menu by setting ‘1’ in the appropriate bit in the “Hotkey Enabled” cell. The hotkey menu allows the control inputs to be set, reset or pulsed without the need to enter the **CONTROL INPUTS** column.		
Control Input 1	Latched	Latched, Pulsed
Configures the control inputs as either ‘latched’ or ‘pulsed’. A latched control input will remain in the set state until a reset command is given, either by the menu or the serial communications. A pulsed control input, however, will remain energized for 10ms after the set command is given and will then reset automatically (i.e. no reset command required).		
Ctrl Command 1	Set/Reset	Set/Reset, In/Out, Enabled/Disabled, On/Off
Allows the SET/RESET text, displayed in the hotkey menu, to be changed to something more suitable for the application of an individual control input, such as “ON/OFF”, “IN/OUT” etc.		
Control Input 2 to 32	Latched	Latched, Pulsed
Configures the control inputs as either ‘latched’ or ‘pulsed’.		

Menu Text	Default Setting	Available Setting
CTRL I/P CONFIG.		
Ctrl Command 2 to 32	Set/Reset	Set/Reset, In/Out, Enabled/Disabled, On/Off
Allows the SET/RESET text to be changed to “ON/OFF”, “IN/OUT” etc.		

1.3.11 InterMiCOM Comm and Conf (P741/P743)

The settings necessary for the implementation of InterMiCOM are contained within two columns of the relay menu structure: **InterMiCOM comms** and **InterMiCOM conf**. The two columns are visible when the **InterMiCOM** setting in the **CONFIGURATION** column is **enabled**, with the InterMiCOM option present.

1.3.11.1 InterMiCOM Communications

This column contains all the information to configure the communication channel and also contains the channel statistics and diagnostic facilities.

Menu Text	Default Setting	Setting Range		Step Size
		Min.	Max.	
INTERMICOM COMMS				
IM Input Status	00000000			
IM Output Status	00000000			
The two cells display the InterMiCOM input and Output status (see P74x/EN OP section for pin allocation).				
Source Address	1	0	10	1
Receive Address	2	0	10	1
The “source” and “receive” addresses are used to synchronize remote and local relays. Both relays must be programmed with a unique pair of addresses that correspond with each other in the “Source Address” and “Receive Address” cells.				
Baud rate	9600	600/1200/2400/4800/9600/19200		
This cell controls the communication speed between relay and master station. It is important that both relay and master station are set at the same speed setting.				
Ch Statistics	Invisible	Invisible/Visible		
Activates or hides the channel statistics. When visible is selected, the following menus are displayed. Otherwise, next menu is “Ch Diagnostics”.				
Rx Direct Count	Data			
Number of Direct Tripping messages received with the correct message structure and valid CRC check.				
Rx Perm Count	Data			
Number of Permissive Tripping messages received with the correct message structure.				
Rx Block Count	Data			
Number of Blocking messages received with the correct message structure.				
Rx NewDataCount	Data			
Number of different messages received.				
Rx ErroredCount	Data			
Number of incomplete or incorrectly formatted messages received.				

Menu Text	Default Setting	Setting Range		Step Size
		Min.	Max.	
INTERMICOM COMMS				
Lost messages	Data			
Number of messages lost within the previous time period set in “Alarm Window” cell.				
Elapsed Time	Data			
Time in seconds since the InterMiCOM channel statistics were reset.				
Reset Statistics	No	Yes/No		
Reset channel statistics command.				
Ch Diagnostics	Invisible	Invisible/Visible		
Activates or hides the channel diagnostics. When visible is selected, the following menus are displayed. Otherwise, next menu is “loopback mode”.				
Data CD Status	OK/Fail/Absent/Unavailable			
Indicates when the “Data Carrier Detect” (DCD) line (pin 1) is energised. OK = DCD is energized, FAIL = DCD is de-energized, Absent = InterMiCOM board is not fitted, Unavailable = hardware error present.				
FrameSync Status	OK/Fail/Absent/Unavailable			
Indicates when the message structure and synchronisation is valid. OK = valid message structure and synchronisation, FAIL = synchronisation has been lost, Absent = InterMiCOM board is not fitted, Unavailable = hardware error present.				
Message Status	OK/Fail/Absent/Unavailable			
Indicates when the percentage of received valid messages has fallen below the **IM Msg Alarm Lvl** setting within the alarm time period. OK = acceptable ratio of lost messages, FAIL = unacceptable ratio of lost messages, Absent = InterMiCOM board is not fitted, Unavailable = hardware error present.				
Channel Status	OK/Fail/Absent/Unavailable			
Indicates the state of the InterMiCOM communication channel. OK = channel healthy, FAIL = channel failure, Absent = InterMiCOM board is not fitted, Unavailable = hardware error present.				
IM H/W Status	OK/Fail/Absent/Unavailable			
Indicates the state of the InterMiCOM hardware. OK = InterMiCOM hardware healthy, Read Error = InterMiCOM hardware failure, Write Error = InterMiCOM hardware failure, Absent = InterMiCOM board is either not fitted or failed to initialise.				
Loopback mode	Disabled	Disabled/Internal/External		
By selecting “Loopback Mode” to “Internal”, only the internal software of the relay is checked whereas “External” will check both the software and hardware used by InterMiCOM (In the latter case, it is necessary to connect the transmit and receive pins together and ensure that the DCD signal is held high).				
Test pattern	11111111	00000000/11111111		
A test pattern can be entered which is then transmitted through the software and/or hardware.				
Loopback Status				
Providing all connections are correct and the software is working correctly, the “Loopback Status” cell will display “OK”. An unsuccessful test would be indicated by “FAIL”, whereas a hardware error will be indicated by “UNAVAILABLE”.				

1.3.11.2 InterMiCOM Configuration

This column selects the format of each signal and its fallback operation mode.

InterMiCOM provides 8 commands over a single communications link, with the mode of operation of each command being individually selectable within the **IM# Cmd Type** cell (# = 1 to 8).

Menu Text	Default Setting	Setting Range		Step Size
		Min.	Max.	
INTERMICOM CONF				
IM Msg Alarm Lvl	25%	0%	100%	1%
The **IM Msg Alam Lvl** sets the level of invalid messages received compared to the total number of messages that should have been received. If this value exceeds the selected level, an alarm will be raised.				
IM1 Cmd type	Blocking	Disabled/Blocking/Direct/Permissive		
"Blocking" mode provides the fastest signalling speed (available on commands 1 - 4), "Direct Intertrip" mode provides the most secure signalling (available on commands 1 - 8) and "Permissive" mode provides the most dependable signalling (available on commands 5 - 8). Each command can be disabled so that it has no effect in the logic of the relay.				
IM1 Fallback Mode	Default	Default/ Latched		
Visible if **IM1 Cmd type** ≠ "Disabled". When "Latched", during periods of extreme where the synchronization of a message structure is lost or is cannot be decoded, the last good command can be maintained until a new valid message is received. When "Default": if the synchronisation is lost, after a time period, a known fallback state can be assigned to the command. In this latter case, the time period will need to be set in the **IM# FrameSynTim** cell, and the default value will need to be set in **IM# DefaultValue** cell. As soon as a full valid message is seen by the relay all the timer periods are reset, and the new valid command states are used. An alarm is provided if the noise on the channel becomes excessive.				
IM1 DefaultValue	1	0	1	1
Visible if **IM1 Fallback Mode** = **Default** Sets the default value to assign to the command after a time period.				
IM1 FrameSyncTim	20ms	10ms	1500ms	10ms
Visible if **IM1 Fallback Mode** = **Default** Sets the time period to assign the known default value to the relay.				
IM2 to IM8 Cmd type				
As IM1 Cmd Type. **Note:** Setting choices are different from IM2 to IM8 (see IM1 Cmd type). When Cmd Type is enabled, Fallback Mode is enabled. Default values and frameSync type are settable when fallback mode selection is "latched".				

1.3.12 Function Keys Menu

Available in Central Unit P741 and Peripheral Unit P743

Menu Text	Default Setting	Available Setting
FUNCTION KEYS		
Fn. Key Status	0000000000	
Displays the status of each function key.		

Menu Text	Default Setting	Available Setting
FUNCTION KEYS		
Fn. Key 1 Status	Unlocked	Disabled, Locked, Unlock
Setting to activate function key. The 'Lock' setting allows a function key output that is set to toggle mode to be locked in its current active state.		
Fn. Key 1 Mode	Toggled	Toggled, Normal
Sets the function key in toggle or normal mode. In 'Toggle' mode, a single key press will set/latch the function key output as 'high' or 'low' in programmable scheme logic. This feature can be used to enable/disable relay functions. In the 'Normal' mode the function key output will remain 'high' if the key is pressed.		
Fn. Key 1 Label	Function Key 1	
Allows the text of the function key to be changed to something more suitable for the application.		
Fn. Key 2 to 10 Status	Unlocked	Disabled, Locked, Unlock
Setting to activate function key (see "Fn. Key 1 Status").		
Fn. Key 2 to 10 Mode	Toggled	Toggled, Normal
Sets the function key in toggle or normal mode (see "Fn. Key 1 mode").		
Fn. Key 2 to 10 Label	Function Key 2 to 10	
Allows the text of the function key to be changed.		

1.3.13 IEC 61850 CONFIG

The contents of the **IED CONFIGURATOR** column (for IEC 61850 configuration) are mostly data cells, displayed for information but not editable. To edit the configuration, it is necessary to use the IED (Intelligent Electronic Device) configurator tool within S1 Agile.

P741/P743 only

Menu Text	Default Setting	Setting Range		Step Size
		Min.	Max.	
IEC 61850 CONFIG				
Switch Conf.Bank	No Action	No Action, Switch Banks		
Setting which allows the user to switch between the current configuration, held in the Active Memory Bank (and partly displayed below), to the configuration sent to and held in the Inactive Memory Bank.				
Restore MCL	No action	No action/Restore MCL		
Used to restore data from MCL binary file. MCL (MiCOM Configuration Language) files contain single device IEC61850 configuration information and are used for transferring data to/from the IED.				
Active Conf.Name	Data			
The name of the configuration in the Active Memory Bank, usually taken from the SCL file.				
Active Conf.Rev	Data			
Configuration Revision number of the Active Memory Bank, used for version management.				
Active Conf.Edition	Data			
IEC61850 Active Configuration Edition				
Inact.Conf.Name	Data			
The name of the configuration in the Inactive Memory Bank, usually taken from the SCL file.				
Inact.Conf.Rev	Data			
Configuration Revision number of the Inactive Memory Bank, used for version management.				

Menu Text	Default Setting	Setting Range		Step Size
		Min.	Max.	
Inact Conf.Edition	Data			
IEC61850 Inactive Configuration Edition.				
IP from HMI				
When set to Enabled the IP Address, Subnet Mask & Gateway may be configured via the HMI. When set to Disabled these parameters may only be set using the .MCL file. This setting allows for an Ethernet connection to be established with the relay without needing to first send a .MCL file via the serial port. Once a connection has been established the correct .MCL can be sent via Ethernet and this setting can be changed back to "Disabled". Note: You can enable this feature when you use the IED for the first time. However, the IED will at this point not have an active MCL file and any data model extracted from IEC 61850 may not be correct. Therefore, to prevent any issues you should send a correct MCL file to the IED after a connection is first established.				
IP PARAMETERS				
IP Address	Data			
Displays the unique network IP address that identifies the relay.				
Subnet Mask	Data			
Displays the sub-network that the relay is connected to.				
Gateway	Data			
Displays the IP address of the gateway (proxy) that the relay is connected to.				
Media				
IEC 61850 versions only. Displays the communication media of the Ethernet port that is currently in use.				
IP address				
IEC 61850 versions only. When IP From HMI is enabled, this is used to set the unique network IP address that identifies the unit.				
Subnet mask				
IEC 61850 versions only. When IP From HMI is enabled, this is used to set the sub-network mask.				
Gateway				
IEC 61850 versions only. Set the IP address of the gateway (proxy) the relay is connected to via HMI if any.				
Media				
IEC 61850 versions only. Sets the communication media of the Ethernet port. For products with dual redundant fibre select the 1xCopper/2xFibre setting.				
SNTP PARAMETERS				
SNTP Server 1	Data			
Displays the IP address of the primary SNTP server.				
SNTP Server 2	Data			
Displays the IP address of the secondary SNTP server.				
IEC 61850 SCL				
IED Name	Data			
8-character IED name, which is the unique name on the IEC 61850 network for the IED, usually taken from the SCL (Substation Configuration Language for XML) file.				

Menu Text	Default Setting	Setting Range		Step Size
		Min.	Max.	
IEC 61850 GOOSE				
GoEna	00000000	00000000	11111111	1
GoEna (GOose ENAble) is a setting to enable GOOSE (Generic Object Orientated Substation Event, for high-speed inter-device messaging) publisher settings. This setting enables ("1") or disables ("0") GOOSE control blocks from 08 (1st digit) to 01 (last digit).				
Publisher Sim	00000000	Enabled/Disabled		
IEC 61850 versions only. The Publisher Sim cell allows the simulation bit to be sent in the GOOSE message, for example for testing or commissioning. When 'Disabled' is selected, the simulation bit for the goose control block is not set. When 'Enabled' is selected, the simulation bit for the goose control block is set. Once testing is complete the cell must be set back to 'Disabled' to restore the GOOSE scheme back to normal service. **Note:** The cell 'Test Mode' under IED Configurator used in software prior to IEC 61850 Edition 2 has been renamed as 'Publisher Sim'.				

1.3.13.1 Security Config

Menu Text	Default Setting	Setting Range
SECURITY CONFIG		
User Banner	ANCII Text	From 32 to 234 in steps of 1
NERC compliant user IED description.		
Attempts Limit	Unsigned Integer (16 Bits)	From 0 to 2 in steps of 1
Defines the maximum number of failed password attempts.		
Attempts Timer	Unsigned Integer (16 Bits)	From 0 to 3 in steps of 1
Lockout Period	Unsigned Integer (16 Bits)	From 0 to 5940 in steps of 1
Defines the time duration for which the user is blocked after exceeding the maximum attempts limit in Seconds.		
Front Port	Enabled	Enabled, Disabled
Enable/disable of Physical Front Port.		
Rear Port 1	Enabled	Enabled, Disabled
Enable/disable of Physical Rear Port 1.		
Rear Port 2	Enabled	Enabled, Disabled
Enable/disable of Physical Rear Port 2.		
Ethernet Port	Enabled	Enabled, Disabled
Enable/disable of Physical Ethernet Port.		
Courier Tunnel	Enabled	Enabled, Disabled
Enable/disable of the Ethernet connection made from MiCOM S1 Agile software or any other client.		

Menu Text	Default Setting	Setting Range
IEC 61850	Enabled	Enabled, Disabled
Enable/disable of Logical IEC61850 Port.		
DNP3 OE	Enabled	Enabled, Disabled
Enable/disable of Logical DNP3 Over Ethernet Port.		
Force Logout	No Operation	No Operation/All Sessions/Front Port/HMI/Rear Port1/ Rear Port2/Tunnel Courier
The user in the role of ADMINISTRATOR can force logout all the active sessions or on dedicated interface.		
Attempts Remain	Unsigned Integer (16 Bits)	Attempts Remain
Number of password attempts remaining.		
Blk Time Remain	Unsigned Integer (16 Bits)	Blk Time Remain
Blocking time remaining.		
Fallbck PW Level	Unsigned Integer (16 Bits)	Fallbck PW Level
Local Session		
FP InactivTimer		
A configurable period of time when a user is automatically logged out on Front Port if they remain inactive for. Once log out, resetting of the entered access-level back to 0. Setting the inactivity timer settings to 0 disables session management and the automatic-logout feature is disabled (i.e. a logged in user remains logged in forever; or until the user manually logs out).		
UI InactivTimer		
A configurable period of time when a user is automatically logged out on UI if they remain inactive for. Once log out, resetting of the entered access-level back to 0. Setting the inactivity timer settings to 0 disables session management and the automatic-logout feature is disabled (i.e. a logged in user remains logged in forever; or until the user manually logs out).		
RBAC		
Auth. Method	Server + Device	Server + Device/Server only/Device only
Configure the active Authentication method.		
RADIUS Pri IP	0.0.0.0	From 0.0.0.0 to 223.255.255.255 in steps of 1
RADIUS Server 1 configured to provide Server Authentication service. Setting this cell to 0.0.0.0 disables RADUIS Server 1.		
RADIUS Sec IP	0.0.0.0	From 0.0.0.0 to 223.255.255.255 in steps of 1
RADIUS Server 2 configured to provide Server Authentication service. Setting this cell to 0.0.0.0 disables RADIUS Server 2.		
RADIUS Auth Port	1812	From 1 to 65535 in steps of 1
The destination TCP/IP port sent to both Primary and Secondary RADIUS servers.		

Menu Text	Default Setting	Setting Range
RADIUS Security	PAP EAP-TTLS-PAP	EAP-TTLS-MSCHAP2/PAP/EAP-PEAP-MSCHAP2/ PAP EAP-TTLS-PAP
Option for choosing an authentication scheme used by RADIUS server. EAP-TTLS-MSCHAP2 - EAP Transport Layer Security (EAP-TLS) is an IETF open standard that uses the TLS protocol. Using TLS, a secure channel is then established between Relay and Radius server. The Microsoft version of Challenge-Handshake Authentication Protocol Version 2 (MS-CHAPv2) is a password-based authentication method that utilizes the user account credentials (username and password) stored in Active Directory Domain Services to authenticate. EAP-TTLS-MSCHAP2 represents the MSCHAPv2 method transferred over EAP-TTLS channel. PAP - Password Authentication Protocol (PAP) is a password-based authentication protocol. PAP is considered a weak authentication scheme. Protected Extensible Authentication Protocol (PEAP) is a protocol that encapsulates the Extensible Authentication Protocol (EAP) within an encrypted and authenticated TLS tunnel. EAP-PEAP-MSCHAP2 - represents the EAP-MSCHAPv2 method encapsulated by PEAP. PAP EAP-TTLS-PAP - represents the PAP protocol transferred over EAP-TTLS channel.		
RADIUS Timeout	2	From 1 to 900 in steps of 1
Define the timeout in seconds to obtain RADIUS answer.		
RADIUS Retries	10	From 1 to 99 in steps of 1
Define the times Relay will retry to request authentication from Radius server if there is no response.		
RADIUS Secret	ChangeMe1#	From 33 to 122 in steps of 1
The shared secret is used by Radius server to verify the identity of IED.		
Bypass Auth.	Disabled	Disabled/HMI-Only/Local/Remote/Local & Remote
Allow a user, when logged in as an administrator, to bypass the authentication requirements for specific interfaces.		
RADIUS Status	Disabled	RADIUS Status
Reporting the status of Radius server.		

1.3.14 Control I/P (input) Labels

This column is visible when the **Control I/P Labels** setting in the **CONFIGURATION** column is set to **visible**.

P741/P743 only

Menu Text	Default Setting	Setting Range
CTRL I/P LABELS		
Control Input 1	Control Input 1	16 Character Text
Setting to change the text associated with each individual control input. This text will be displayed when a control input is accessed by the hotkey menu, or it can be displayed in the programmable scheme logic.		
Control Input 2 to 32	Control Input 2 to 32	16 Character Text
As “Control input 1” for control inputs 2 to 32.		

1.4 Disturbance Recorder Settings

The disturbance recorder settings include the record duration and trigger position, selection of analogue and digital signals to record, and the signal sources that trigger the recording.

The **DISTURBANCE RECORDER** menu columns are different for the Central Unit and the Peripheral Units as shown in the following configuration columns.

P741

Menu Text	Default Setting	Setting Range		Step Size
		Min.	Max.	
DISTURB. RECORDER				
Duration	1.2 s	1.2 s	1.2 s	0.0 s
This sets the overall recording time. The relay can typically store a minimum of 50 records, each of 1.2 seconds duration in the CU (until the available memory is exhausted).				
Trigger Position	16.67%	0.0%	50.0%	16.67%
This sets the trigger point as a percentage of the duration. For example, the default settings show that the overall recording time is set to 1.2s with the trigger point being at 33.3% of this, giving 0.4 s pre-fault and 0.8 s post fault recording times.				
Trigger Mode	Single	Single/extended		
If set to single mode, if a further trigger occurs whilst a recording is taking place, the recorder will ignore the trigger. However, if this has been set to "Extended", the post trigger timer will be reset to zero, thereby extending the recording time.				
Analog. Channel 1	I_A diff	Non settable		
The Phase A differential calculated current is assigned to this channel.				

The following lines give the default settings for analogue channels 2 to 8.

Menu Text	Default Setting	Explanation
Analog. Channel 2	I_B diff	Phase B differential calculated current.
Analog. Channel 3	I_C diff	Phase C differential calculated current.
Analog. Channel 4	I_N diff	Neutral differential calculated current.
Analog. Channel 5	I_A bias	Phase A bias calculated current.
Analog. Channel 6	I_B bias	Phase B bias calculated current.
Analog. Channel 7	I_C bias	Phase C bias calculated current.
Analog. Channel 8	I_N bias	Neutral bias calculated current.

Menu Text	Default Setting	Setting Range
DISTURB. RECORDER		
Digital Input 1	Circt Flt Lck z1	Any O/P Contacts or Any Opto Inputs or Internal Digital Signals
The Circuitry fault blocks zone 1 digital channel is assigned to this channel.		

The following lines give the default settings for digital inputs 2 to 32

Menu Text	Default Setting	Explanation
Digital Input 2	Circt Flt Lck z2	Circuitry fault blocks zone 2 digital channel
Digital Input 3	87BB Blocked	digital 87BB Blocked channel
Digital Input 4	Ext Start DR	External start of the disturbance recorder digital channel
Digital input 5	Earth Fault	Earth fault digital channel
Digital input 6	Fault Check zone	Fault Check zone digital channel
Digital input 7	Fault phase A	Fault phase A digital channel

Menu Text	Default Setting	Explanation
Digital input 8	Fault phase B	Fault phase B digital channel
Digital input 9	Fault phase C	Fault phase C digital channel
Digital input 10	Flt 87BB zone 1	Fault 87BB zone 1 digital channel
Digital input 11	Flt 87BB zone 2	Fault 87BB zone 2 digital channel
Digital input 12	Manual Start DR	Manual start of the disturbance recorder digital channel
Digital input 13	Topo/Set Changed	Topology or setting changed digital channel
Digital input 14	Trip Manual zone	Manual trip of the zone digital channel
Digital input 15	Trip 50BF zone 1	Trip 50BF zone 1 digital channel
Digital input 16	Trip 50BF zone 2	Trip 50BF zone 2 digital channel
Digital input 17	Trip 87BB zone 1	Trip 87BB zone 1 digital channel
Digital input 18	Trip 87BB zone 2	Trip 87BB zone 2 digital channel
Digital input 19	PU Error Lck z1	PU error blocks zone 1 digital channel
Digital Input 20	PU Error Lck z2	PU error blocks zone 2 digital channel
Digital Input 21 to 32	Unused	
The digital channels may be mapped to any of the opto isolated inputs or output contacts, in addition to a number of internal relay digital signals, such as protection starts, LEDs etc.		

Menu Text	Default Setting	Setting Range
DISTURB. RECORDER		
Manual Trigger	No	Yes or No
Command to trigger the disturbance recorder. The differential and bias currents recorded depend on the following settings Zone to record.		
Zone to record	Zone 1	Zone 1 to zone 8
Any one of the 8 zones can be recorded upon a manual triggering. If 2 or more zones are selected, the check zone will be recorded.		

P742/P743

Menu Text	Default Setting	Setting Range		Step Size
		Min.	Max.	
DISTURB. RECORDER				
Duration	1.2 s	1.2 s	10.5 s	0.01 s
This sets the overall recording time. The relay can typically store up to 10.5 seconds until the available memory is exhausted.				
Trigger Position	33.3%	0.0%	100.0%	0.1%
This sets the trigger point as a percentage of the duration. For example, the default settings show that the overall recording time is set to 1.2s with the trigger point being at 33.3% of this, giving 0.4 s pre-fault and 0.8 s post fault recording times.				
Trigger Mode	Extended	Single or Extended		
If set to single mode, if a further trigger occurs whilst a recording is taking place, the recorder will ignore the trigger. However, if this has been set to "Extended", the post trigger timer will be reset to zero, thereby extending the recording time.				

Menu Text	Default Setting	Setting Range		Step Size
		Min.	Max.	
Analog. Channel 1	I_A	Non settable		
The Phase A analogue current input is assigned to this channel.				

The following lines give the default settings for analogue channels 2 to 4.

Menu Text	Default Setting	Explanation
Analog. Channel 2	I_B	Phase B analogue current input
Analog. Channel 3	I_C	Phase C analogue current input
Analog. Channel 4	I_N	Neutral analogue current input

Menu Text	Default Setting	Setting Range
DISTURB. RECORDER		
Digital Input 1	Field Volt Fail	Any O/P Contacts or Any Opto Inputs or Internal Digital Signals
The Mains field voltage has failed digital channel is assigned to this channel.		
Input 1 trigger	No Trigger	No Trigger, Trigger L/H, Trigger H/L
No trigger: The digital channel will not trigger the Digital input 1. Trigger L/H: The digital channel will trigger the disturbance recorder when changing from '0' to '1'. Trigger H/L: The digital channel will trigger the disturbance recorder when changing from '1' to '0'.		

The following lines give the default settings for "Digital inputs" 2 to 32 and "Input 2 to 32 triggers". Setting choices for Input triggers are No Trigger, Trigger L/H and Trigger **H/L**.

Menu Text	Default Setting	Explanation
Digital input 2	Any Trip	Any Trip digital channel
Input 2 trigger	Trigger L/H	
Digital input 3	CB Closed	CB Closed digital channel
Input 3 trigger	No Trigger	
Digital input 4	CB Fail Alarm	CB Fail Alarm digital channel
Input 4 trigger	No Trigger	
Digital input 5	CB not available	CB not available digital channel
Input 5 trigger	No Trigger	
Digital input 6	CBF Int Backtrip	CB Failure Internal Backtrip order digital channel
Input 6 trigger	Trigger L/H	
Digital input 7	CBF Ext Backtrip	CB Failure External Backtrip order digital channel
Input 7 trigger	Trigger L/H	
Digital input 8	Dead Zone Fault	Dead Zone Fault digital channel
Input 8 trigger	Trigger L/H	
Digital input 9	Ext. CB Fail	External CB Fail digital channel
Input 9 trigger	Trigger L/H	

Menu Text	Default Setting	Explanation
Digital input 10	Ext. 3 ph Trip	External 3 phase trip digital channel
Input 10 trigger	Trigger L/H	
Digital input 11	Internal Trip	Internal Trip digital channel
Input 11 trigger	Trigger L/H	
Digital input 12	Q1 Closed	Isolator 1 closed digital channel
Input 12 trigger	No Trigger	
Digital input 13	Q2 Closed	Isolator 2 closed digital channel
Input 13 trigger	No Trigger	
Digital input 14	Q3 Closed	Isolator 3 closed digital channel
Input 14 trigger	No Trigger	
Digital input 15	Man. Trip zone	Manual Trip of the zone digital channel
Input 15 trigger	Trigger L/H	
Digital input 16	Relay Label 01	Relay Label 01 digital channel
Input 16 trigger	No Trigger	
Digital input 17	Relay Label 02	Relay Label 02 digital channel
Input 17 trigger	No Trigger	
Digital input 18	Relay Label 03	Relay Label 03 digital channel
Input 18 trigger	No Trigger	
Digital input 19	Saturation ph A	Saturation phase A digital channel
Input 19 trigger	No Trigger	
Digital input 20	Saturation ph B	Saturation phase B digital channel
Input 20 trigger	No Trigger	
Digital input 21	Saturation ph C	Saturation phase C digital channel
Input 21 trigger	No Trigger	
Digital input 22	Trip 50BF (CU)	Trip 50BF from the CU digital channel
Input 22 trigger	Trigger L/H	
Digital input 23	Trip 87BB	Trip 87BB digital channel
Input 23 trigger	Trigger L/H	
Digital input 24 to 32	Unused	
The digital channels may be mapped to any of the opto isolated inputs or output contacts, in addition to a number of internal relay digital signals, such as protection starts, LEDs etc.		

Menu Text	Default Setting	Explanation
Digital input 4	CB Fail Alarm	CB Fail Alarm digital channel
Input 4 trigger	No Trigger	
Digital input 5	CB not available	CB not available digital channel
Input 5 trigger	No Trigger	
Digital input 6	CBF Int Backtrip	CB Failure Internal Backtrip order digital channel
Input 6 trigger	Trigger L/H	
Digital input 7	CBF Ext Backtrip	CB Failure External Backtrip order digital channel
Input 7 trigger	Trigger L/H	
Digital input 8	Dead Zone Fault	Dead Zone Fault digital channel
Input 8 trigger	Trigger L/H	
Digital input 9	Ext. CB Fail	External CB Fail digital channel
Input 9 trigger	Trigger L/H	
Digital input 10	Ext. 3 ph Trip	External 3 phase trip digital channel
Input 10 trigger	Trigger L/H	
Digital input 11	Internal Trip	Internal Trip digital channel
Input 11 trigger	Trigger L/H	
Digital input 12	Q1 Closed	Isolator 1 closed digital channel
Input 12 trigger	No Trigger	
Digital input 13	Q2 Closed	Isolator 2 closed digital channel
Input 13 trigger	No Trigger	
Digital input 14	Q3 Closed	Isolator 3 closed digital channel
Input 14 trigger	No Trigger	
Digital input 15	Man. Trip zone	Manual Trip of the zone digital channel
Input 15 trigger	Trigger L/H	
Digital input 16	Relay Label 01	Relay Label 01 digital channel
Input 16 trigger	No Trigger	
Digital input 17	Relay Label 02	Relay Label 02 digital channel
Input 17 trigger	No Trigger	
Digital input 18	Relay Label 03	Relay Label 03 digital channel
Input 18 trigger	No Trigger	
Digital input 19	Saturation ph A	Saturation phase A digital channel
Input 19 trigger	No Trigger	
Digital input 20	Saturation ph B	Saturation phase B digital channel
Input 20 trigger	No Trigger	
Digital input 21	Saturation ph C	Saturation phase C digital channel
Input 21 trigger	No Trigger	
Digital input 22	Trip 50BF (CU)	Trip 50BF from the CU digital channel
Input 22 trigger	Trigger L/H	
Digital input 23	Trip 87BB	Trip 87BB digital channel
Input 23 trigger	Trigger L/H	

OPERATION

CONTENTS

1.	**OPERATION OF INDIVIDUAL PROTECTION FUNCTIONS**	**5**
1.1	**Busbar Biased Current Differential Protection**	**5**
1.1.1	Operating Principle	5
1.1.2	Application of Kirchoffs Law	5
1.2	**Bias Characteristic and Differential Current**	**6**
1.3	**Scheme Supervision by "check zone" Element**	**6**
2.	**BUSBAR PROTECTION**	**7**
2.1	**Bias Characteristic and Differential Current Setting**	**7**
2.2	**Scheme Supervision by "check zone" Element**	**7**
2.3	**Scheme Earth Characteristic Element**	**8**
2.4	**Threshold Coherency**	**9**
2.5	**Signal Quality**	**10**
2.6	**Tripping Criterion**	**10**
2.7	**Trip Duration**	**11**
2.8	**Current Circuit Supervision**	**11**
2.8.1	Protection Options for the Zones	11
2.8.2	Protection Options for the Check Zone	12
2.8.3	Voltage Criterion for Busbar Protection	13
2.8.4	Busbar Protection Tripping Time Delays	14
2.8.5	Busbar Protection Tripping Order PU Logic	15
3.	**ADDITIONAL PROTECTION FUNCTIONS**	**16**
3.1	**Dead Zone Protection (DZ)**	**16**
3.2	**Stub Protection**	**16**
3.3	**Circuit Breaker Fail (CBF)**	**16**
3.3.1	Distributed Tripping, Control and Indication Elements (Peripheral Units)	16
3.4	**Circuit Breaker Fail Reset Criterion**	**16**
3.4.1	Overcurrent Criterion	16
3.4.2	Undercurrent Reset Criterion	16
3.4.3	Undercurrent Function Principles	19
3.4.4	Logic Reset Criterion	20
3.4.5	Logic AND Current Reset Criterion	20
3.4.6	Processing a Circuit Breaker Failure Condition	20
4.	**THREE PHASE OVERCURRENT PROTECTION**	**27**
4.1	**Inverse Time (IDMT) Characteristic**	**27**
4.1.1	Reset Characteristics	27
5.	**EARTH FAULT PROTECTION**	**29**
5.1	**EF Time Delay Characteristics**	**29**

5.2 External Fault Detection by High-Set Overcurrent or Earth Fault Element 29
5.3 Zero Sequence Current (I_O) Supervision 29
5.4 CT Supervision 30
5.5 Protection Signaling Introduction 30
5.5.1 Unit Protection Schemes: 30
5.5.2 Teleprotection Commands 30
5.6 EIA(RS)232 InterMiCOM ("MODEM InterMiCOM") 32
5.6.1 Communications Media 32
5.6.2 InterMiCOM Statistics & Diagnostics 32
5.7 InterMiCOM Teleprotection Introduction 32
5.7.1 Implementation 32
5.7.2 Configuration 33
5.8 Connecting to Electrical InterMiCOM 34
5.8.1 Short Distance 34
5.8.2 Long Distance 35

6. CURRENT TRANSFORMERS 36
6.1 CT Saturation Detection 36

7. ISOLATOR STATE MONITORING FEATURES 40

8. CIRCUIT BREAKER STATE MONITORING FEATURES 41

9. CIRCUIT BREAKER CONTROL 43
9.1 CB Control using the IED Menu 43
9.2 CB Control using the Hotkeys 43
9.3 CB Control using the Function Keys 44
9.4 CB Control using the Opto-Inputs 45
9.5 Remote CB Control 45

10. OPERATION OF NON PROTECTION FUNCTIONS 46
10.1 Programmable Scheme Logic 46
10.1.1 Level settings 46
10.1.2 Accuracy 46
10.2 Differential Current Display 46

11. COMMUNICATIONS BETWEEN PU AND CU 47
11.1 Communications Link 47
11.2 Direct Optical Fibre Link, 850nm Multi-mode Fibre 47
11.3 Optical Budgets 47
11.4 Trip LED Logic 48
11.5 Function Keys 48

FIGURES

Figure 1: Differential Busbar Protection Principle 5
Figure 2: P74x Scheme Characteristic 7
Figure 3: Sensitive Earth Fault Characteristic 8
Figure 4: Sensitive Earth Fault Blocking Characteristic 9
Figure 5: VT(s) Connected to the Bar(s) and the Central Unit 14
Figure 6: CB Fail Element Logic – Principle of Reset Time Control 18
Figure 7: CB Element Logic 19
Figure 8: CB Fail Logic 21
Figure 9: CB Fail Logic (DDB Inputs & Outputs) 22
Figure 10: CB Fail Element Logic – Internally Initiated 23
Figure 11: Circuit Breaker Failure Logic 24
Figure 12: Examples 24
Figure 13: CB Fail Element Logic – Externally Initiated 25
Figure 14: CT Supervision 30
Figure 15: Pictorial Comparison of Operating Modes 31
Figure 18: Example Assignment of InterMiCOM Signals within the PSL 34
Figure 16: Direct Connection 35
Figure 17: InterMiCOM Teleprotection using Modems 35
Figure 19: Current Variation 36
Figure 20: Current Variation Criterion 36
Figure 21: Determination of Signal Quality in Peripheral Unit 37
Figure 22: Determination of Signal Quality in the Peripheral Unit 37
Figure 23: CT Saturation Reset 38
Figure 24: CT Saturation 38
Figure 25: Determination of Signal Quality in the Peripheral Unit 39
Figure 26: CT Location 39
Figure 27: CB State Monitoring Features 42
Figure 31: HOTKEY Menu Navigation 44
Figure 32: CB Control via Function Keys Default PSL 44
Figure 28: Remote Control of Circuit Breaker 45
Figure 29: Module Interconnection 47
Figure 30:TRIP LED Logic Diagram 48

1. OPERATION OF INDIVIDUAL PROTECTION FUNCTIONS

The following sections detail the individual protection functions. However, not all the protection functions listed below are applicable to every relay.

1.1 Busbar Biased Current Differential Protection

The primary protection element of the P74x scheme is phase segregated biased current differential protection. The technique used is purely numerical and uses nodal analysis throughout the scheme, on a per zone and per scheme basis. The analysis is carried out in the central unit therefore communication between the central unit and all peripheral units is essential. This is achieved via a direct optical connection utilising a 2.5 Mbits/sec data rate.

1.1.1 Operating Principle

The basic operating principle of differential protection is based on the application of Kirchhoff's law. This compares the amount of current entering and leaving the protected zone and the check zone. Under normal operation, the amount of current flowing into the area and the check zone concerned is equal to the amount of the current flowing out of the area. Therefore, the currents cancel out. In contrast, when a fault occurs the differential current that arises is equal to the derived fault current.

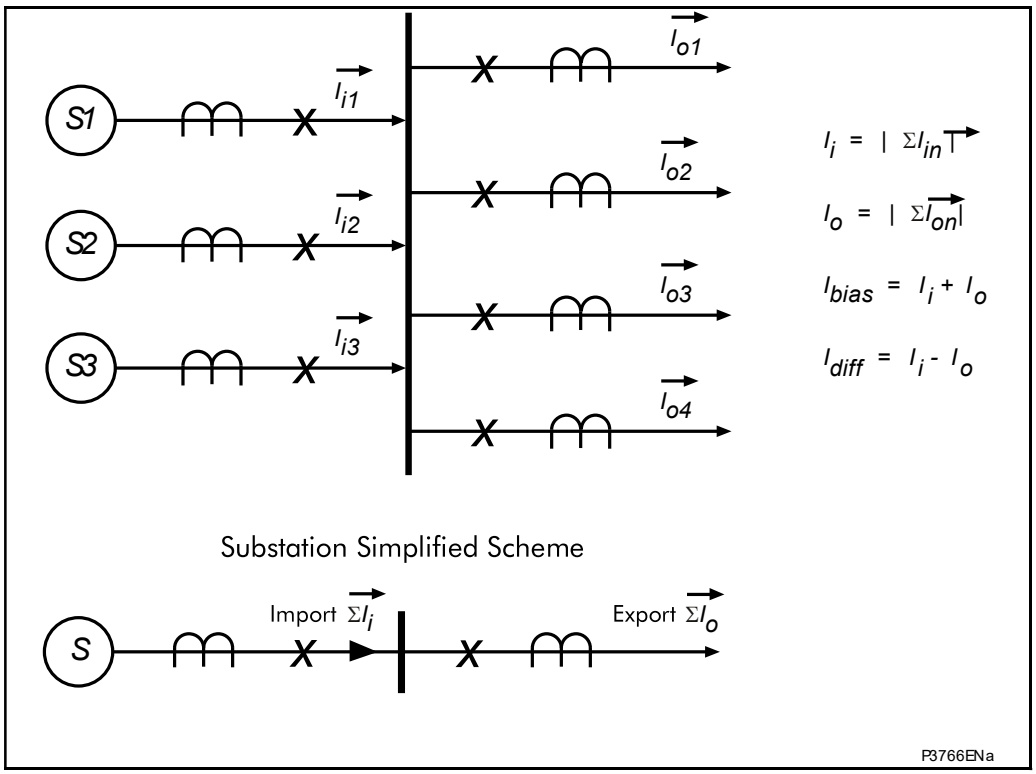

Figure 1: Differential Busbar Protection Principle

1.1.2 Application of Kirchoffs Law

Several methods of summation can be used for a differential protection scheme:

- Vector sum
- Instantaneous sum

The algorithms applied in P74x use the instantaneous sum method (on samples). This method has the advantage of cancelling the harmonic and DC components of external origin in the calculation and under transformer inrush conditions.

The other advantage of using an instantaneous sum lies in the speed of decision, which in turn is dictated by the sampling frequency.

Differential currents may also be generated under external fault conditions due to CT error. To provide stability for through fault conditions the relay adopts a biasing technique, which effectively raises the setting of the relay in proportion to the through fault current thereby preventing relay maloperation.

The bias current is the scalar sum of the currents in the protected zone and for the check zone. Each of these calculations is done on a per phase basis for each node and then summated.

1.2 Bias Characteristic and Differential Current

The operation of the busbar differential protection is based on the application of an algorithm having a biased characteristic, (Figure 2) in which a comparison is made between the differential current and a bias or restraining current. A trip is only permitted if this differential current exceeds the set slope of the bias characteristic. This characteristic is intended to guarantee the stability of protection during external faults where the scheme has current transformers with differing characteristics, likely to provide differing performance.

The algorithm operands are as follows:

Differential Current

$$i_{diff}(t) = |\Sigma\, i|$$

Bias or Restraining current

$$i_{bias}(t) = \Sigma\, |i|$$

Slope of the bias characteristic

kx

Tripping permitted by bias element for:

$$i_{diff}x(t) > kx \times i_{bias}(t)$$

The main differential current element of P74x will only be able to operate if the differential current reaches a threshold I_Dx>2. In general, this setting will be adjusted above the normal full load current.

1.3 Scheme Supervision by "check zone" Element

The use of a "check zone" element is based on the principle that in the event of a fault on one of the substation busbars, the differential current measured in the faulty zone will be equal to that measured in the entire scheme.

One of the most frequent causes of maloperation of differential busbar protection schemes is an error in the actual position of an isolator or CB in the substation to that replicated in the scheme (auxiliary contacts discrepancy). This would produce a differential current in one or more current nodes. However, if an element monitors only the currents "entering" and "leaving" the substation, the resultant will remain negligible in the absence of a fault, and the error will lie with the zone's assumption of the plant position at this point in time.

2. BUSBAR PROTECTION

2.1 Bias Characteristic and Differential Current Setting

Figure 2 shows the characteristics of the P74x scheme phase differential element.

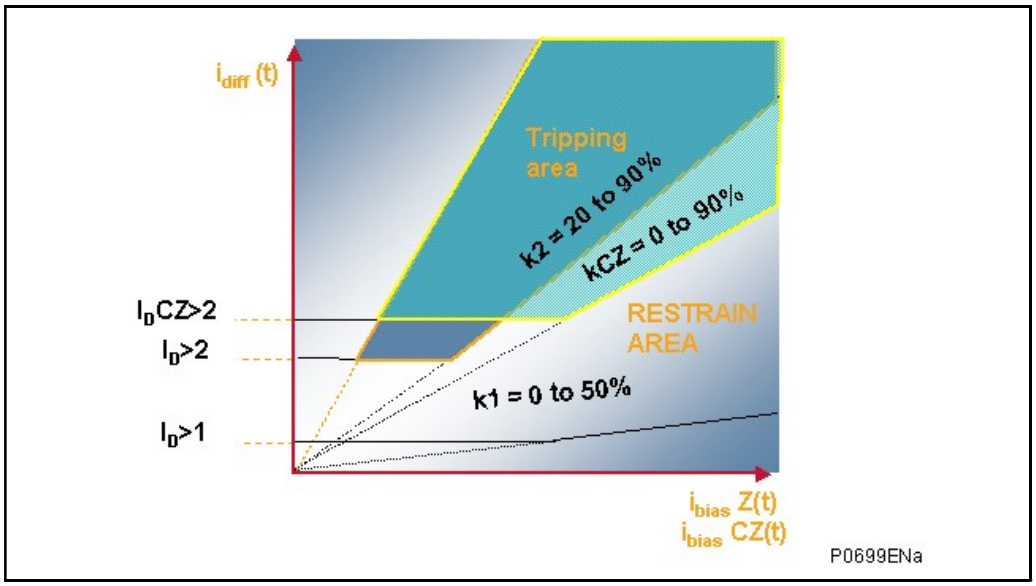

Figure 2: P74x Scheme Characteristic

The Phase characteristic is determined from the following protection settings:

- Area above the I_D>2 High-set zone differential current threshold setting and the set slope of the bias characteristic (k2 × I_{bias}) (k2 is the percentage bias setting ("slope") for the zone)

  Note: The origin of the bias characteristic slope is 0.

When an external fault condition causes CT saturation, a differential current is apparent and is equal to the current of the saturated CT. The measured differential current may be determined as an internal fault and initiate an unwanted trip of the bus bar. To avoid a risk of tripping under these circumstances, P74x uses an ultra fast innovative algorithm based on the prediction of the next samples and the calculation of the image of the flux of the HV CT core. This signal-processing algorithm makes it possible to block a trip sample within a window of 1,7 ms. A timer 'Block Duration' of 150 ms is used to block the differential element in case of CT saturation detection.

2.2 Scheme Supervision by "check zone" Element

For security, the P74x scheme will only trip a particular busbar zone if that zone differential element AND the check zone element agree to trip.

The principal advantage of this element is total insensitivity to topological discrepancies. Under such circumstances the "check zone" element will see two currents with equal amplitude but of opposite sign in adjacent zones.

The Check Zone characteristic is determined from the following protection settings:

- Area above the I_DCZ>2 High-set check zone differential current threshold setting and the set slope of the bias characteristic (kCZ × I_{bias}) (kCZ is the percentage bias setting ("slope") for the Check Zone)

  Note: The origin of the bias characteristic slope is 0.

The check zone is the sum of all the current nodes entering and leaving the substation (feeders).

Scheme differential current = sum of all differential current feeder nodes:

$i_{diff}(t)$ **CZ =** $|\Sigma\, i_{diff}|$

The Check Zone will operate as the Zone element.

2.3 Scheme Earth Characteristic Element

The Earth characteristic is determined from the following protection settings:

I_DN>2 High-set zone differential current threshold setting which crosses the set slope of the bias characteristic ($k \times I_{bias}$)

I_DNCZ>2 High-set check zone differential current threshold setting which crosses the set slope of the bias characteristic ($kCZ \times I_{bias}$)

KN2 Percentage bias setting (“slope”) for the zone

kNCZ Percentage bias setting (“slope”) for the check zone

The current control and blocking matrix is shown in figure 3

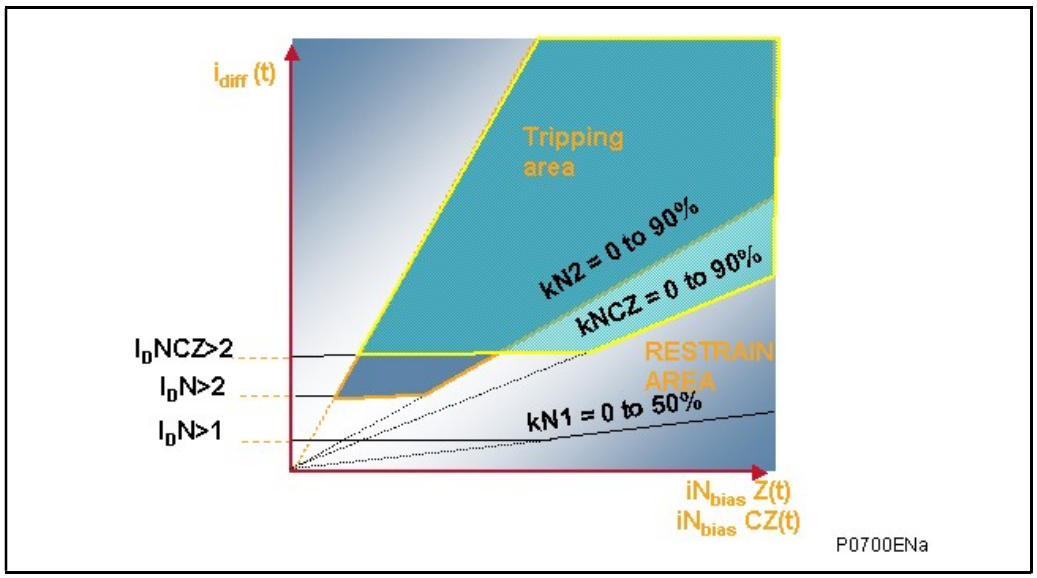

Figure 3: Sensitive Earth Fault Characteristic

This element is automatically enabled/disabled via the load (flowing) current. The point at which the sensitive earth fault protection is enabled/disabled (IbiasPh>Cur.) is settable in the range. This threshold is usually set to be equal to the minimum phase to phase short circuit current.

Under earth fault conditions the risk of CT saturation is minimal and therefore the slope of the characteristic can be set low, however, should the fault evolve to a phase fault, it is important that the normal characteristic be restored.

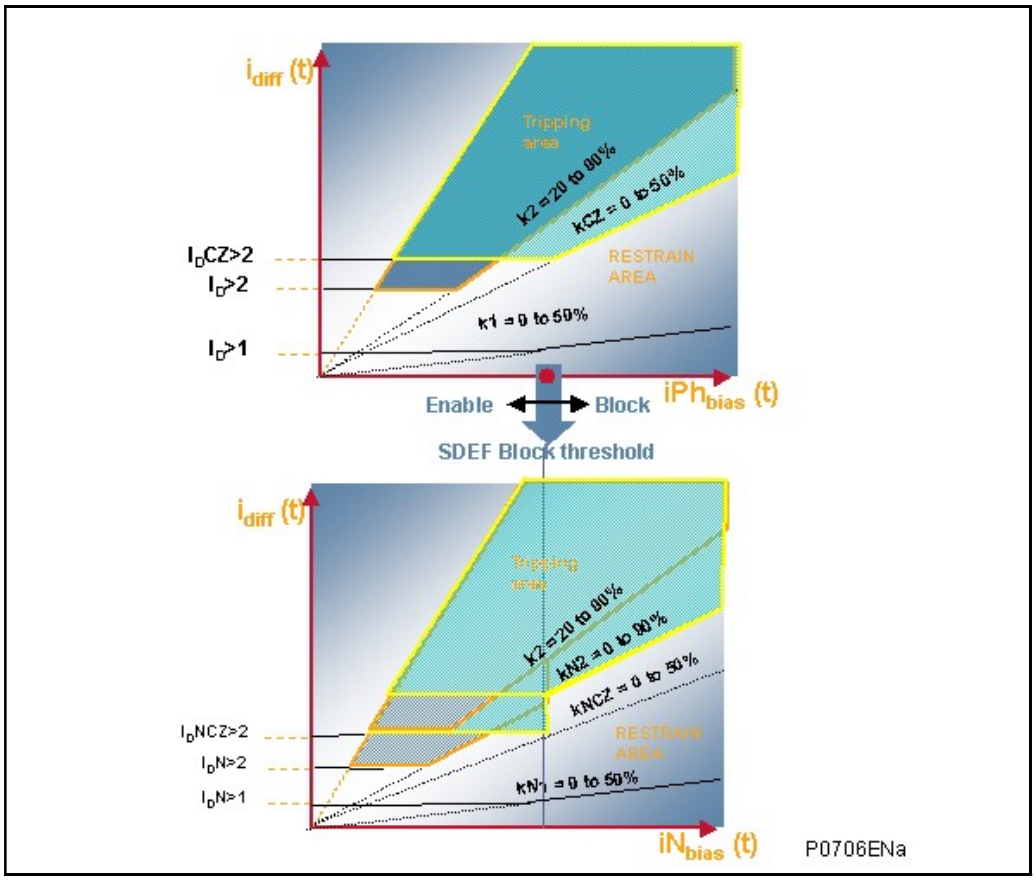

Figure 4: Sensitive Earth Fault Blocking Characteristic

For an external phase fault the SDEF protection will be disabled by the blocking command as long as the 'IbiasPh>Cur.' threshold remains exceeded.

For an internal phase to phase fault the bias current will be sufficient to enable the SDEF blocking order. The SDEF protection is blocked, and no trip is issued from this element irrespective of the SDEF setting thresholds being exceeded. As the main phase differential protection is always active, it can react to the fault and issue a trip command accordingly.

For an external phase to phase fault the SDEF will be disabled via the blocking order.

The sensitive differential earth fault protection is delayed by 20ms to prevent any maloperation during CT saturation condition.

Important note: SDEF should only be used when all the CTs are of the same standard

2.4 Threshold Coherency

The measuring elements have several level detectors for differential current. Upon starting, the protection reacts to any setting inconsistency in the detection of these levels' specific order.

The differential protection is blocked until the thresholds [I_D>1and I_D>2] and [I_DN>1and I_DN>2] are set in the correct sequence.

The thresholds must be set so that:

(I_D>1) ⩽ (I_D>2) , (I_D>1) ⩽ (I_{DCZ}>2) and (I_{DN}>1) ⩽ (I_{DN}>2), (I_{DN}>1) ⩽ (I_{DNCZ}>2)

The table below shows operation depending on the thresholds' status.

ID>1	k1.Ibias	ID>2	Status	Operation
0	0	0	Normal	No operation
1	0	0	Normal	No operation
0	1	0	Normal	No operation
1	0	1	External fault or circuitry fault	External fault with CT saturation or block circuitry fault alarm after tCF
1	1	0	Circuitry fault	Block and circuitry fault alarm after tCF
1	1	1	Internal fault	Trip

2.5 Signal Quality

An additional check is carried out to confirm that the signals used to determine the previous criterion are satisfactory.

This includes checking for CT saturation conditions (information from peripheral unit, refer to Section 6.1), that no plant discrepancies exist (via check zone as discussed earlier), and that a change (increase or loss) in current flow has been detected by at least two peripheral units (ΔI detection). The latter condition is used, as internal or external faults will cause a change in levels in at least two circuits whereas, a CT fail only affects a single circuit's level (faulty CT).

Note: This condition is used only when there is no dead bus condition.

When a trip is issued for a bus zone by the central unit a signal is sent to all peripheral units associated (or not) with the faulted bus zone. The peripheral units associated with the faulted zone can carry out a further local confirmation via local Overcurrent protection, I>BB or I_N>BB, before allowing a trip to take place.

2.6 Tripping Criterion

Before a trip signal is issued 4 trip criteria at the top level, i.e. the Central Unit, and 1 (optional) at the local level, i.e. the Peripheral Units, must be met.

These criteria are:

Top level (Central Unit)

Instantaneous criterion:

- Bias characteristic (Idiff > (I_D>2)) and Differential current setting are exceeded (I_{diff}> k2 I_{bias}) for the zone for 2 consecutive samples
- Bias characteristic (Idiff > (I_DCZ>2)) and Differential current setting are exceeded (I_{diff}> kCZ I_{bias}) for the check zone for 2 consecutive samples
- No CT saturation
- Signal quality (CT supervision, AD converter, etc…)

Delayed criterion:

- Bias characteristic (Idiff > (ID>2)) and Differential current setting are exceeded (Idiff> k2 Ibias) for the zone for at least 1 sample
- Bias characteristic (Idiff > (IDCZ>2)) and Differential current setting are exceeded (Idiff> kCZ Ibias) for the check zone for at least 1 sample
- Bias characteristic (Idiff > (ID>2)) and Differential current setting are not exceeded (Idiff> k2 Ibias) for the zone for at least 1 sample in the 4 following samples
- Bias characteristic (Idiff > (IDCZ>2)) and Differential current setting are not exceeded (Idiff> kCZ Ibias) for the check zone for at least 1 sample in the 4 following samples
- Bias characteristic (Idiff > (ID>2)) and Differential current setting are exceeded (Idiff> k2 Ibias) for the zone for all the 7 following samples
- Bias characteristic (Idiff > (IDCZ>2)) and Differential current setting are exceeded (Idiff> kCZ Ibias) for the check zone for all the 7 following samples
- Signal quality (CT supervision, AD converter, etc…)

Local Level (Peripheral Unit)

- Local confirmation by an instantaneous Overcurrent element (enabled/disabled) (I>BB or IN>BB)

2.7 Trip Duration

The 87BB and 50BF trip orders are held 200ms by the Central Unit with a drop-off timer of 200ms.

The 50BF trip orders are held 250ms integrated in the 50BF logic with a drop-off timer of 250ms.

In case of operation of the 50BF logic of the PU, this CU 200ms drop-off timer is added to the PU 250ms, thus the trip duration will exceed 450ms.

From software E1.0, model 50, the 200ms drop-off timer in the Central Unit has been replaced by a 200ms dwell timer.

The fault recorder has been modified to start from the following tripping time and the fault duration is determined from the:

- 87BB fault for the 87BB protection
- Backtrip signals coming from the PU or opto inputs in the CU for the 50BF protection

2.8 Current Circuit Supervision

During normal operation the differential current in the scheme should be zero or negligible. Any anomaly is detected via a given threshold I_D>1.

A biased differential element is used to supervise the current circuit. A differential current will result if the secondary circuit of a CT becomes open circuited, short circuited; the amplitude of this current is proportional to the load current flowing in the circuit monitored by the faulty current circuit.

The setting is chosen to be as low as possible (minimum suggested setting is 2% of the biggest CT primary winding) but also allow for standing differential current for example due to CT mismatch and varying magnetising current losses. 5 to 20% is a typical application range.

The element is typically time delayed for 5 seconds (set greater than the maximum clearance time of an external fault). Instead, the time delay allows the relevant protection element (which should be substantially faster) to clear the fault instead i.e. I_D>2 in the case of an internal phase fault.

2.8.1 Protection Options for the Zones

2.8.1.1 Options for a Circuitry Fault

When something happens on the primary equipment that creates a small differential current in a Zone such as CT short-circuited or a closed isolator “seen” open etc…, it is detected by the Central Unit. To deal with this:

There are three options:

1. Blocking Latched
   An alarm is provided, and this alarm can only be reset manually,
   The zone is blocked, and this blocking can only be reset manually.

2. Alarm Latched
   An alarm is provided, and this alarm can only be reset manually,
   The zone is blocked, and this blocking will be automatically reset once the differential current will disappear and after the set reset timer.

3. Self-Reset
   An alarm is provided, and this alarm can only be reset manually,
   The zone is blocked, and this blocking will be automatically reset once the differential current will disappear and after the set reset timer.

These options avoid maloperation in case of through fault during a circuitry fault.

From software E1.0, model 50, there are two more options:

1. Alarm and No blocking!!!
   An alarm is provided, and this alarm can only be reset manually,
   The zone is not blocked!!!

2. Alarm Self-Reset and No blocking!!!
   An alarm is provided.
   The zone is not blocked!!!

THESE 2 OPTIONS WILL TRIP ONE OR MORE ZONE IN CASE OF THROUGH FAULT DURING A CIRCUITRY FAULT:

The selection of "AlarmSR&No Blck !!!" or "Alarm & No Block !!!" modes is effective only if no blocking zone is selected for Check zone circuitry fault (CZ).

When "AlarmSR&No Blck !!!" or "Alarm & No Block !!!" setting is selected, the protection will trip the related zone in case of an external trip.

2.8.1.2 Options for a PU Error Mode

When something happens on the Peripheral Units that creates a loss of communication for a Zone such as loss of power supply or fibre optic cut etc…, it is detected by the Central Unit.

To deal with this there are three options:

1. Blocking Latched
   An alarm is provided, and this alarm can only be reset manually,
   The zone is blocked, and this blocking can only be reset manually.

2. Alarm Latched
   An alarm is provided, and this alarm can only be reset manually,
   The zone is blocked, and this blocking will be automatically reset once the communication will be reinstated and after the set reset timer.

3. Self-Reset
   An alarm is provided, and the zone is blocked.
   The alarm and the blocking will be automatically reset once the communication will be reinstated and after the set reset timer.

These options avoid maloperation in case of switch on to a through fault during maintenance for example.

2.8.2 Protection Options for the Check Zone

2.8.2.1 Options for a Circuitry Fault

There are five options:

1. Blocking Latched
   An alarm is provided, and this alarm can only be reset manually,
   The Check Zone is blocked, and this blocking can only be reset manually.

2. Alarm Latched
   An alarm is provided, and this alarm can only be reset manually,
   The Check Zone is blocked, and this blocking will be automatically reset once the differential current will disappear and after the set reset timer.

3. Self-Reset
   An alarm is provided, and this alarm can only be reset manually,

The Check Zone is blocked, and this blocking will be automatically reset once the differential current will disappear and after the set reset timer.

These options avoid operation of the other zones in case of internal fault during a circuitry fault in the Check Zone.

4. Alarm and No blocking
   An alarm is provided, and this alarm can only be reset manually,
   The Check Zone is not blocked

5. Alarm Self-Reset and No blocking
   An alarm is provided.
   The Check Zone is not blocked

These options allow operation of the other zones in case of internal fault during a circuitry fault in the Check Zone.

2.8.2.2 Options for a PU Error Mode

There are five options:

1. Blocking Latched
   An alarm is provided, and this alarm can only be reset manually,
   The zone is blocked, and this blocking can only be reset manually.

2. Alarm Latched
   An alarm is provided, and this alarm can only be reset manually,
   The Check Zone is blocked, and this blocking will be automatically reset once the communication will be reinstated and after the set reset timer.

3. Self-Reset
   An alarm is provided, and the Check Zone is blocked.
   The alarm and the blocking will be automatically reset once the communication will be reinstated and after the set reset timer.

These options block the operation of the other zones in case of loss of the Check Zone.

4. Alarm and No blocking
   An alarm is provided, and this alarm can only be reset manually,
   The Check Zone is not blocked

5. Alarm Self-Reset and No blocking
   An alarm is provided.
   The Check Zone is not blocked

These options allow the operation of the other zones in case of loss of the Check Zone.

2.8.3 Voltage Criterion for Busbar Protection

Where there is a need to use voltage criteria such as undervoltage, zero sequence overvoltage, direct overvoltage or inverse undervoltage, an external device such as a P923 must be connected to the VT(s).

2.8.3.1 VT(s) Connected to the Bar(s) and the Central Unit,

This device calculates the required voltage information and sends the release information to the Central Unit via an output contact to opto input communication link. The required logic is made in the P741 PSL.

The 87BB trip order can be blocked in the CU using 2 logic input sets, one to block the phase element, the second to block the SEF element and that per zone:

- INP Block 3Ph Z1 to Z8
- INP Block SEF Z1 to Z8

If 2 bus sections are included in the same zone (isolator bus section or during double switching), an OR gate between the 2 voltage criteria from the different bus sections is used to confirm the fault detection.

Example:

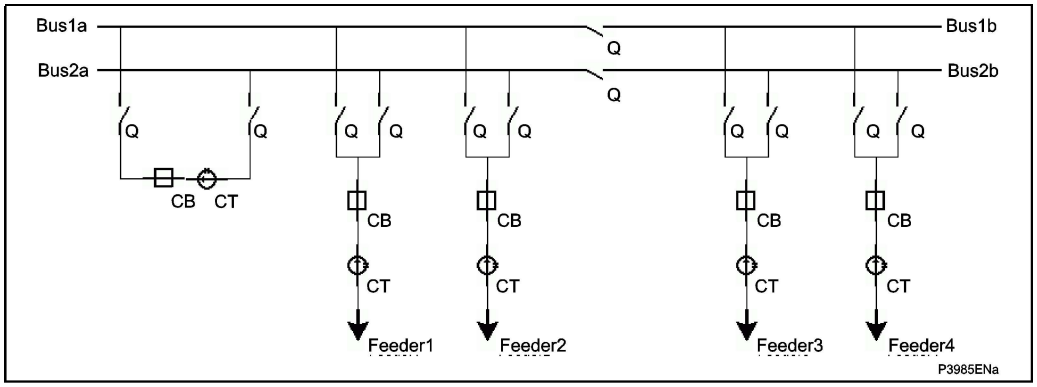

Figure 5: VT(s) Connected to the Bar(s) and the Central Unit

- When the isolator bus sections are open:
  - The faults in zone 1a are confirmed by the VT connected to the bus section 1a
  - The faults in zone 1b are confirmed by the VT connected to the bus section 1b
- When the isolator bus sections are closed:
  - The section 1a and 1b are in the same zone, the faults are confirmed by the VT connected to the bus section 1a OR the VT connected to the bus section 1b
- When the isolator bus sections are open and during double switching, when both isolators of a feeder are closed:
  - The faults in zone 1a / 2a are confirmed by the OR between VT connected to bus 1a and 2a

2.8.3.2 VT(s) Connected to the Line(s) and a Peripheral Unit,

This device calculates the required voltage information and sends the release information to a Peripheral Unit via an output contact to opto input communication link. The required logic is made in the P742 or P743 PSL.

The 87BB trip order can be blocked in the PU using 2 logic inputs, one to block the phase element, the second to block the SEF element:

- INP Block 87BB/P
- INP Block 87BB/N

If some PUs are connected to Voltage device and not the other ones, some PU can trip whereas the other ones are blocked by the voltage criteria coming from the Voltage device.

2.8.4 Busbar Protection Tripping Time Delays

CU:

The 87BB tripping time can be delayed by a settable time. The fault must be detected by the phase element only. This allows, for example, the clearance of the fault by a fuse on the fault feeder before tripping the whole zone.

PU:

The 87BB tripping time can be delayed by a settable time. This allows for example in Generation, a sequential tripping of all feeders connected to the faulty zone.

2.8.5 Busbar Protection Tripping Order PU Logic

In all the PUs, there are options to block the 87BB protection trip order coming from the CU.

The logic is based either on the I>2 high set phase overcurrent function or on the IN>2 high set neutral overcurrent function, each with the following options:

- Phase and earth fault element (87BBP&N blocking)
- Only the 87BB phase element (87BB/P blocking)
- Only the 87BB SEF element (87BB/N blocking)
- A combination of the different functions (I>2 & 87BBP&N, I>2 & 87BB/P, I>2 & 87BB/N)

The 87BB blocking function has a settable drop-off timer from 200ms to 6s by step of 100ms.

3. ADDITIONAL PROTECTION FUNCTIONS

3.1 Dead Zone Protection (DZ)

On a feeder, if the isolators or the breaker is open, a dead zone (or end zone) is said to exist between the open element and the CT. The P74x peripheral units can protect this zone with the Dead Zone protection. This is a simple time delayed overcurrent and earth fault element which is only active when a dead zone is identified in the local topology.

3.2 Stub Protection

When a one and half breaker scheme is protected by a P74x, the stub protection can be done using a simple time delayed overcurrent element in each PU.
The activation of this protection must be set in the PSL and activated when all the associated isolators are open.

In the main setting group (usually 1), there is no overcurrent protection, in the next setting group (usually 2) this overcurrent is enabled (on top of the same setting as in the main setting group).

The setting group will be changed from “main” to “next” in the PSL.

3.3 Circuit Breaker Fail (CBF)

The detailed logic of the circuit breaker failure element follows.

3.3.1 Distributed Tripping, Control and Indication Elements (Peripheral Units)

As the P74x scheme has been designed for use as either a centralised or distributed scheme, the hardware corresponds to one circuit breaker and can accommodate 1 or 2 trip coils:

- 1 main trip coil
- 1 back-up trip coil

Furthermore, there can be either 3 single-phase trip coils or 1 three-phase trip coil. These can be combined, for example 3 single-phase trip coils on the main system and 1 three-phase trip coil for the back-up system.

Note: The backtrip order (coming from the Central Unit) is always given to the relay 1, 2 and 3 even if the CBF is disabled in the Peripheral Units. The retrip must be done using the PSL.

3.4 Circuit Breaker Fail Reset Criterion

3.4.1 Overcurrent Criterion

One of the most common causes of busbar mal tripping is an error introduced in the back tripping of adjacent sections. To prevent such an error, it is possible to condition the operation of 50BF protection only when there is a significant current i.e. a short circuit on the feeder concerned. This confirmation is provided by the I> threshold which is set by default at 1.2 times the nominal rated current of the CT and/or by the threshold setting of residual current I_N> set by default to 0.2 times the rated current.

3.4.2 Undercurrent Reset Criterion

The criterion normally used for the detection of a circuit breaker pole opening is the disappearance of the current i.e. undercurrent element. This function is generally preferred above other elements due to its very fast response time. In P74x this method of detection is utilised and has the threshold I<.

See the logic diagram extract for phase A, below:

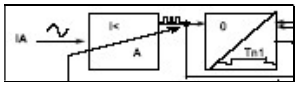

Note: The same algorithm is used for the other phases.

This Undercurrent elements have an I< threshold, which is used to supervise that each circuit breaker has opened correctly, when commanded to do so. By use of the I< threshold, it is possible to ensure that all load and fault current has been ruptured, ensuring that no arcing remains across the circuit breaker primary contacts. Optionally, the user can decide to include 52a supervision in the breaker fail logic (see sections Logic Reset Criterion and Logic and Current Reset Criterion).

The first function is to compare the current sample to the I< threshold and check for the following sequence:

- positive value of the current
- no current (below the threshold)
- negative value of the current
- no current (below the threshold)
- positive value of the current
- …

The output signal is pl(t), it changes between 0 and 1.

Internal overcurrent signals are available per phase and neutral to confirm that the CB failure algorithm has started to count down.

Internal undercurrent signals are available per phase to confirm that each pole has opened.

To maintain the current criterion active while the signal crosses zero, there is a drop-off timer associated with the pl(t) signal. The latching duration is variable to take all cases into account:

- Just after the initiation of the CB fail signal, the waveform can include a DC component, and the time between two successive zero crossings can thus reach one period. Therefore, the resetting time is equal to the period plus a margin of 3ms (23ms at 50Hz, 20ms at 60Hz).
- For the last 30ms before the end of the stage 2 timer, the DC component should have disappeared so that the time between two successive zero crossings should be close to one half-period. Moreover, it is important to detect the opening of the circuit breaker quickly because the end of the back trip timer is near. The drop-off duration is therefore equal to one half period + 3ms (13ms at 50Hz, 11.3ms at 60Hz).

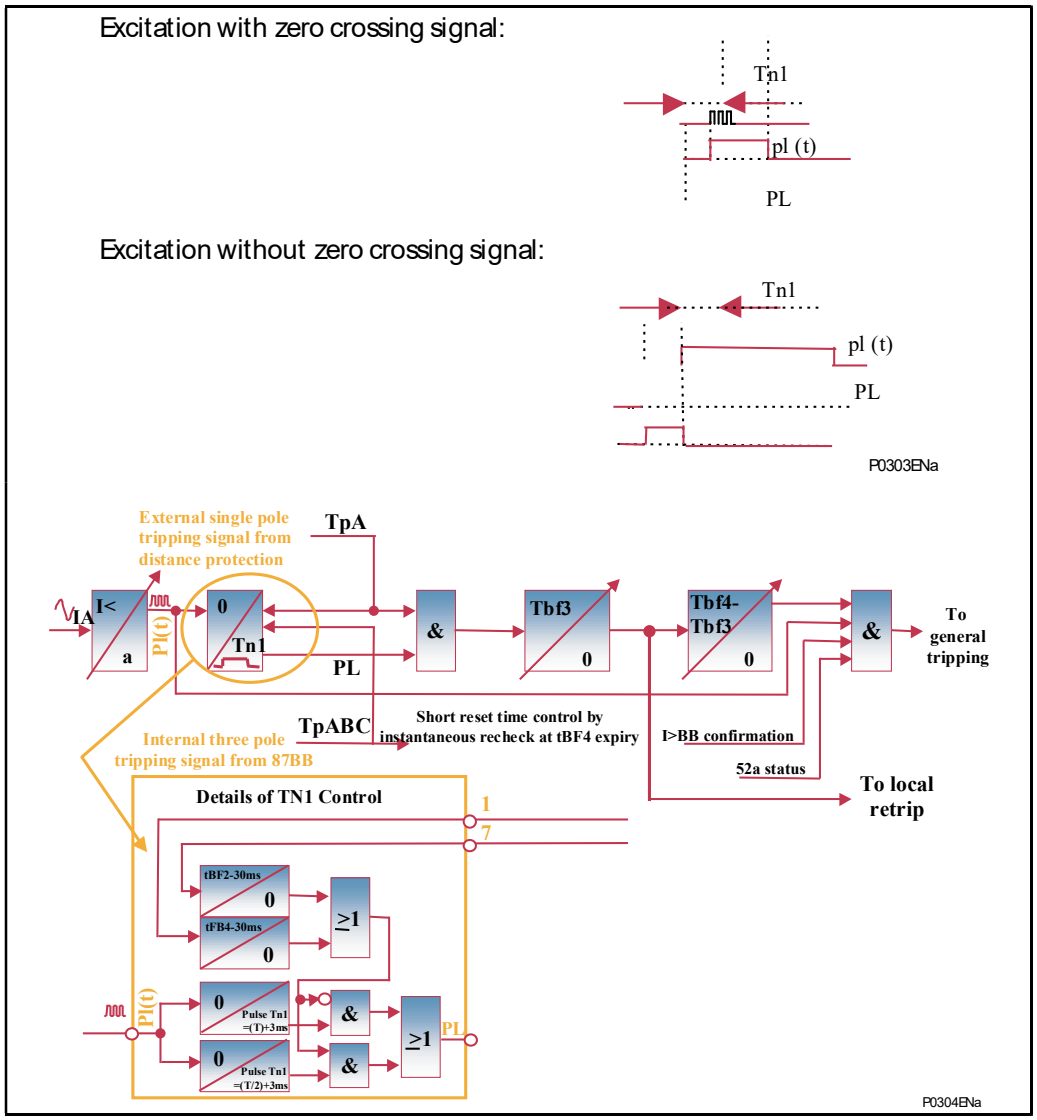

Figure 6: CB Fail Element Logic - Principle of Reset Time Control

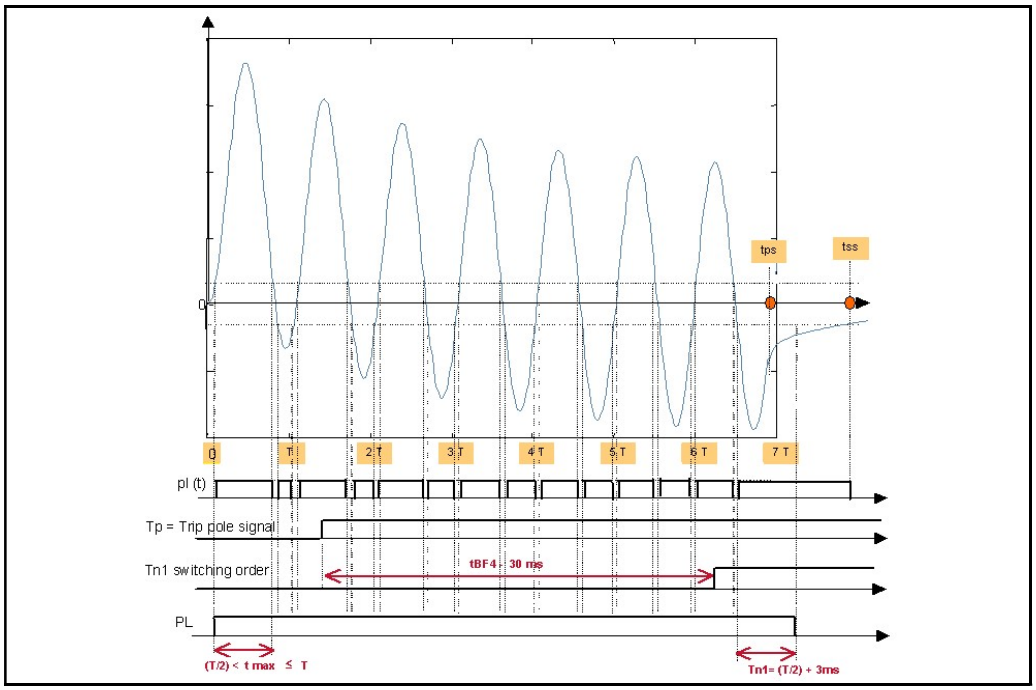

Figure 7: CB Element Logic

3.4.3 Undercurrent Function Principles

Instantaneous current measurements are taken for both the positive and negative half cycles, ensuring immunity to DC offset waveforms, and CT current ring-down.

The two horizontal dotted lines are instantaneous thresholds, fixed in proportion to the user's I< setting. The instantaneous threshold is at 70 percent of the I< fundamental RMS setting. As any current rises above the dotted line instantaneous threshold, this rising measurement triggers a pulse timer to declare that current is flowing. The duration of the pulse is one full cycle plus 3ms (T+3ms). It does not matter whether the magnitude of the current stays above the dotted line further, as the detector is effectively edge-triggered. Current flow has been declared based on this half cycle, and not until the current falls below the detector setting is the edge-trigger ready to declare an output again. Whilst current is flowing, on the rise of current in each half-cycle the pulse timer is retriggered. This sequential retriggering ensures that current is detected.

The detection of breaker opening is made on one of two scenarios:

(1) The current falls below the instantaneous detection threshold, and does not rise again before the pulse timer expires; or
(2) A CT current ringdown does not change sign and remains in one polarity sense up until the timer expires.

Note: The pulse timer length is variable and adapts according to the anticipated proportion of DC current offset that may be present in the measured waveform. The pulse timer initially is fixed at one cycle plus 3ms, as described previously, as upon fault inception the DC offset could be appreciable. Near the end of the breaker fail time, the pulse length is shortened to half a power cycle plus 3ms (T/2 + 3ms). The presumption is that the DC offset in real fault current has decayed, and that the shorter time is all that is required. The pulse length is commuted 30ms before expiry of the tBF2 timer (for internally initiated CBF) and 30ms before expiry of the tBF4 timer (for externally initiated CBF). The reduced pulse length means faster resetting of the current detector.

3.4.4 Logic Reset Criterion

For instances where circuits may carry a very low level of load or even may operate unloaded from time to time. Where 52a contact (CB closed) supervision is set, the relay looks only for 52a resetting to stop the breaker fail timers.

This criteria is based on checking the state of the circuit breaker auxiliary contacts. i.e. to see if the 52a contact is open for open circuit breaker conditions. In the P74x protection system, this detection method is used with the '52a' threshold.

3.4.5 Logic AND Current Reset Criteria

This is for instances where circuits may carry a very low level of load or even may operate unloaded from time to time. Where 52a contact (CB closed) supervision is set, the relay looks for I< undercurrent, and 52a resetting to stop the breaker fail timers.

This criteria relies on verifying the disappearance of the current AND of the state of the CB auxiliary contacts. In the P74x protection system, this detection method is used with the 'I< AND 52a' threshold.

3.4.6 Processing a Circuit Breaker Failure Condition

Due to the nature of the busbar protection, the substation topology can manage the system under circuit breaker failure conditions (50BF).

There are several options for circuit breaker failure protection installations. Generally, these depend on the substation construction and wiring:

- Internally initiated CBF i.e. Initiation from the differential element, 87BB trip issued by the Central Unit
- Externally initiated, for example by the feeder protection, but using the busbar protection’s integral 50BF protection to execute tripping procedure
- Separate 50BF protection to the busbar protection (such as a P821)

The breaker failure logic uses fast acting undercurrent elements to provide the required current check. These elements reset within 15ms, thereby allowing the use of the P74x relay at all voltage levels.

Since the Overcurrent element within the peripheral units may also be used in blocking schemes to provide back-up protection, it is possible to reset the Overcurrent start signals after the breaker fail time delay has elapsed. This ensures that the upstream back-up protection can be maintained by removal of the blocking signal. This would also ensure that the possible risk of re-trip on re-closure of the circuit breaker is minimised.

CB Trip 3 ph:

- Triphase Circuit Breaker Trip from CU (Init 50BF TBF1/TBF2), Logical OR of 87BB, 50BF, Manual Trip Zone X

CB Trip phase A:

- Phase A Circuit Breaker Trip (Init 50BF TBF3/TBF4), Logical OR of O/C Protection, External Trip A, External Trip 3ph

CB Trip phase B:

- Phase B Circuit Breaker Trip (Init 50BF TBF3/TBF4), Logical OR of O/C Protection, External Trip A, External Trip 3ph

CB Trip phase C:

- Phase C Circuit Breaker Trip (Init 50BF TBF3/TBF4), Logical OR of O/C Protection, External Trip A, External Trip 3ph

Note: The CB fail alarm is raised as soon as tBF1 or tBF2 or tBF3 or tBF4 has been reached (Logical OR of the signals 8, 9, 10, 11, 12, 13 in the following figure).

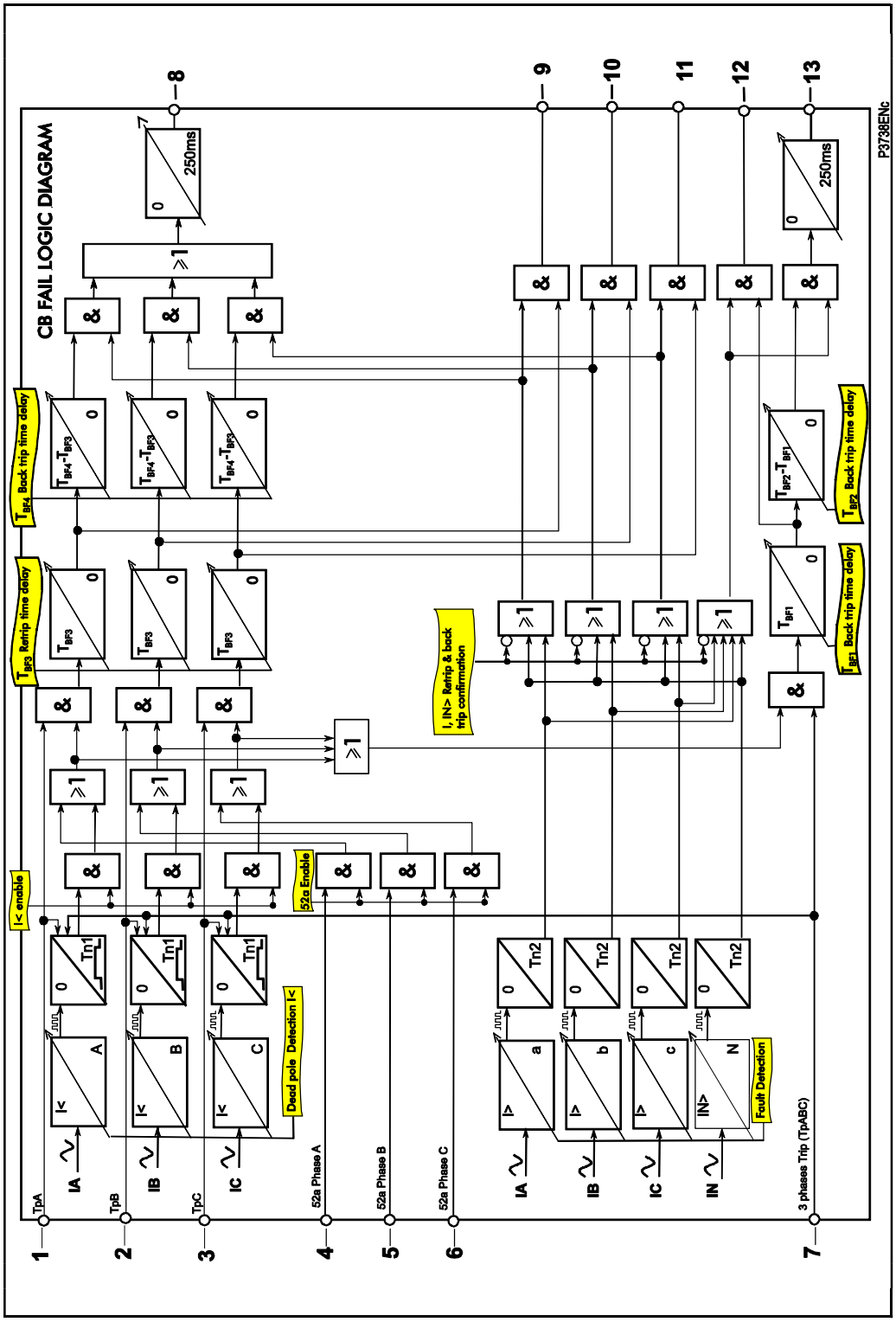

Figure 8: CB Fail Logic

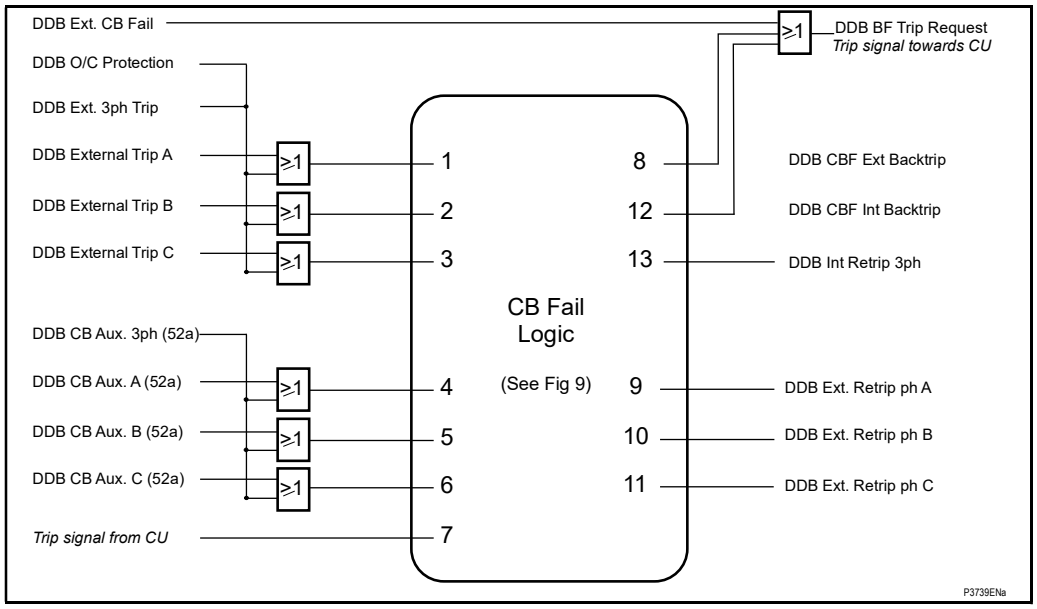

Figure 9: CB Fail Logic (DDB Inputs & Outputs)

3.4.6.1 Internally Initiated CBF

Tripping from the Differential Element 87BB issued by the Central Unit

When a tripping order is generated by the busbar protection (87BB or 50BF) but not executed due to a circuit breaker failure condition, the following circuit breakers are required to be tripped instead:

All the circuit breakers in the adjacent busbar zone if the faulty circuit breaker is that of a bus coupler or bus section.

Optional: The remote end circuit breaker if the faulty circuit breaker is that of a feeder (line or transformer). This intertripping is done via PSL and may not be required on feeders, which may be serviced automatically via the distance or other line protection.

The tripping order from the busbar protection is referenced as Tp_{ABC}, it is always three-phase and initiates timers tBF1 and tBF2. The first timer is associated with the local re-trip function while the second timer is associated with the conveyance of the signal to the central unit for tripping of the adjacent zone in the cases of bus coupler/bus section circuit breaker failure.

3.4.6.1.1 Description of the Logic for Internally Initiated CBF

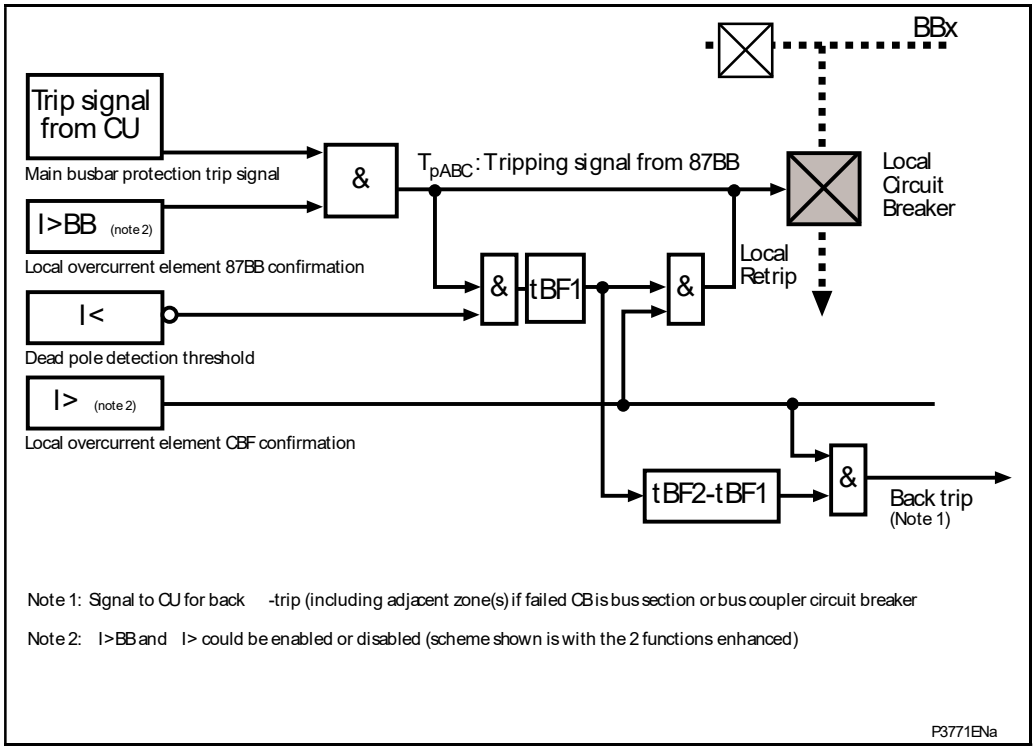

Figure 10: CB Fail Element Logic - Internally Initiated

3.4.6.1.2 Initial Trip

A trip signal is issued by the central unit and then confirmed by the local peripheral unit. If the (optional) threshold for the local Overcurrent protection setting for busbar protection (I>BB) is exceeded, then the local circuit breaker trip coil is energised and subsequently the local circuit breaker is tripped.

3.4.6.1.3 Re-Trip After Time tBF1

The peripheral unit's dead pole detection threshold (I<) and external protection initiation (I>) trigger the first breaker failure timer (tBF1). This signal in turn is passed through an AND gate with the signal from the local Overcurrent protection for busbar protection (I>BB) (if a circuit breaker failure condition has evolved this will still be present) and a re-trip command is issued. Re-trip output contacts should be assigned using the PSL editor (including in default PSL settings).

3.4.6.1.4 Back-Trip After Time tBF2

A signal from the first circuit breaker timer triggers the second breaker failure timer (tBF2). This in turn is passed through an AND gate with the signal from the local overcurrent protection for busbar protection (I>BB), if a circuit breaker failure condition has persisted this will still be present, and a general bus-zone back-trip signal issued via the central unit.

In summary tBF1 is used for re-trip and tBF2 for general bus zone back-trip

Because the busbar protection scheme uses the substation topology, during circuit breaker failure conditions, circuit breaker operations are executed according to the current state of the system. It is therefore of paramount importance that should an internally initiated scheme be implemented, the circuit breaker tripping order must be thoroughly defined within the scheme topology to guarantee correct scheme operation.

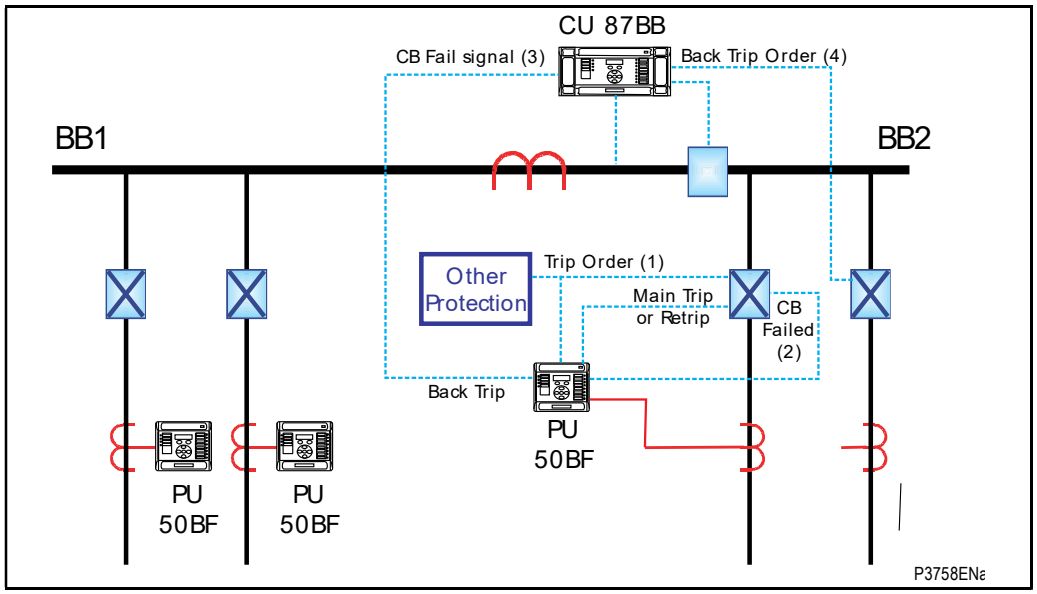

Figure 11: Circuit Breaker Failure Logic

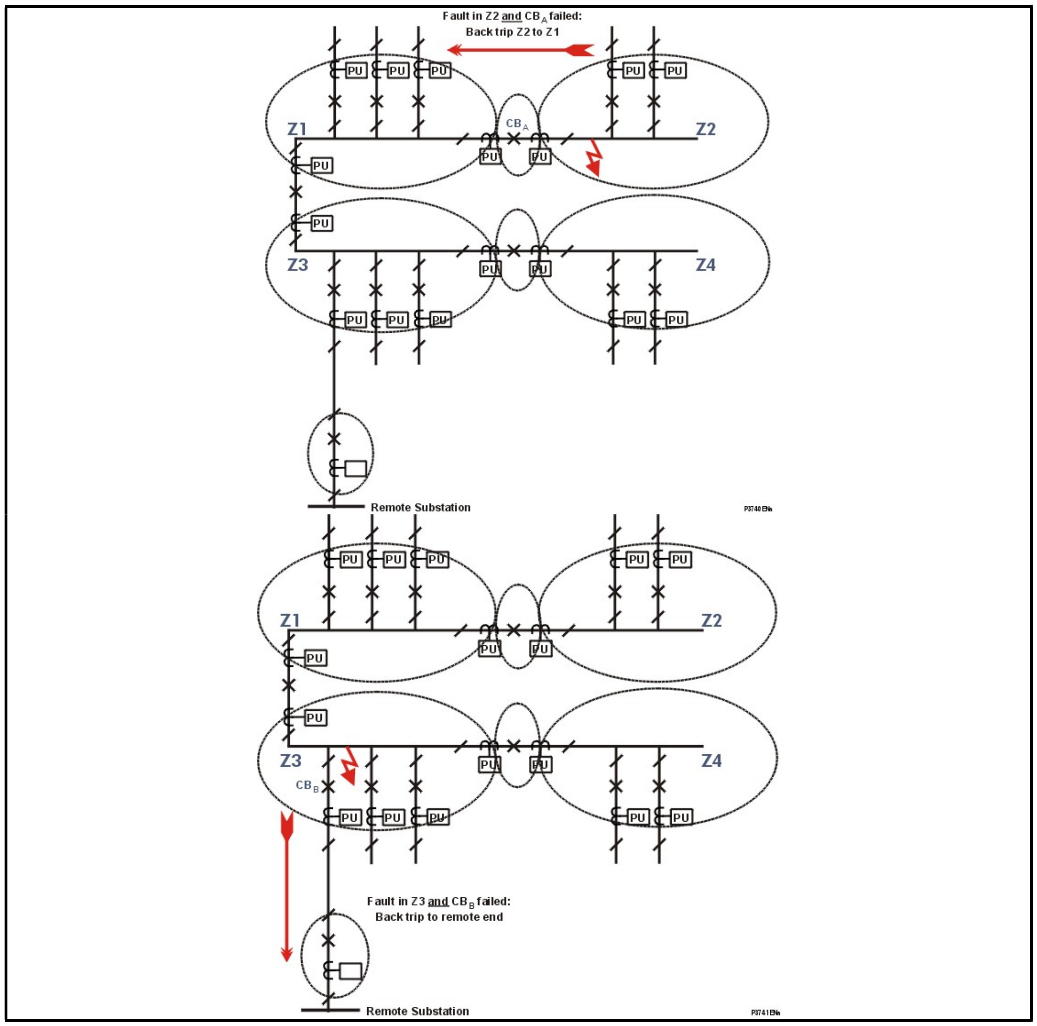

Figure 12: Examples

3.4.6.2 Externally Initiated 50BF

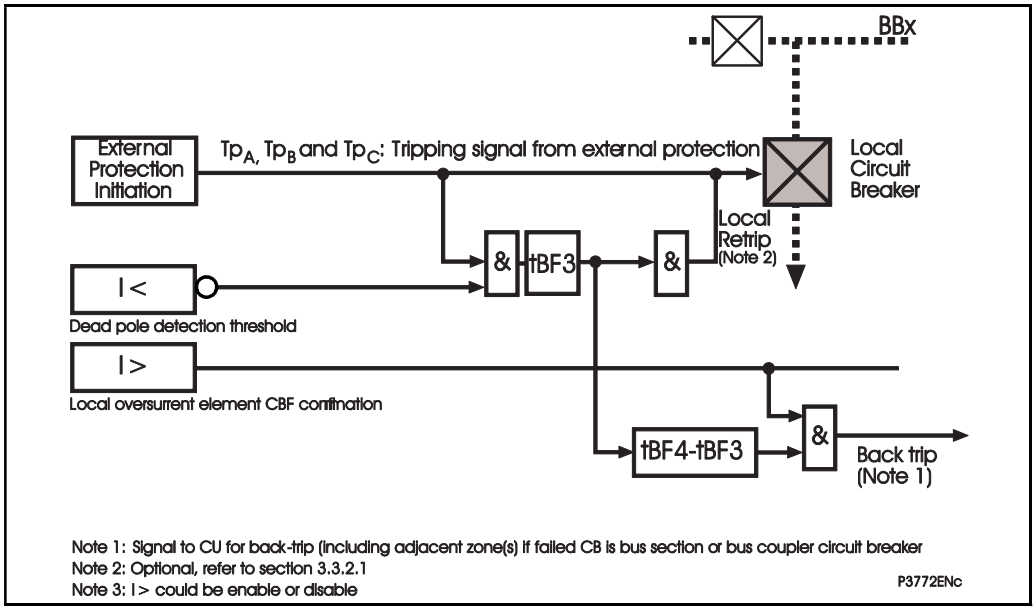

Figure 13: CB Fail Element Logic - Externally Initiated

Considering the relationship between the busbar protection and the circuit breaker failure protection, certain operators prefer an integrated solution where the breaker failure may be initiated by external protection but executed in the busbar scheme. Tripping is then worked out in the section or zone.

On an overhead line for example the external commands may be generated by the distance protection (21). Generally, these commands are on a per phase basis and therefore the tripping commands must be too. In the diagrams these signals are labelled Tp_A, Tp_B, Tp_C (Tripping pole A, B or C).

The logic is similar to that for internally initiated CB fail protection but utilises tBf3 for re-trip and tBF4 for back-trip functions.

3.4.6.3 Local Re-trip After Time tBf3

This re-trip command can be applied via the main or back up trip coil. It is possible to choose between the 3 following modes:

- Local re-trip activated/deactivated via PSL. The relay used for this function can use the same fixed logic for the busbar protection or other independent relays.
- A re-trip can be applied after a time tBF3. This is typically set at 50ms when a single-phase trip and re-trip is used. This prevents loss of phase selectivity by allowing the main protection trip to execute via the main CB trip coil before re-trip command is executed by the back-up CB trip coil.
- Single or three phase re-trip is possible. If the feeder protection executes single-phase tripping, the three-phase re-trip must be carried out in time tBF3 and this must be adjusted to have a value higher than the normal operation time of the circuit breaker. Typical setting under this condition is 150ms.

3.4.6.3.1 General Zone Trip After Time tBF4

When both the local trip and re-trip have failed, the countdown continues with a second timer adjusted to have a value of tBF4 - tBF3. The end of this time thus corresponds to total time tBF4, beyond which a persistent circuit breaker failure condition is declared.

Information is then relayed to the Central unit for routing to the other peripheral units, and the associated circuit breakers, in the adjacent zone(s) for a general three-phase back-trip.

3.4.6.4 CB Fail Alarm

The CB Fail alarm is raised on any timer reached (tBF2 or tBF4)

3.4.6.5 Separate External 50BF Protection to the Busbar Protection

This is the most common solution utilising conventional wiring. The 50BF relay is completely independent of all others. When a circuit breaker failure condition occurs, the external protection trips all adjacent circuit breakers as defined in the separate scheme (DDB Ext. CB fail).

In view of the connection between the functions of the busbar protection and the circuit breaker failure protection some operators prefer one of the more integrated system solutions previously mentioned.

4. THREE PHASE OVERCURRENT PROTECTION

4.1 Inverse Time (IDMT) Characteristic

IDMT characteristics are selectable from a choice of four IEC/UK and five IEEE/US curves as shown in the table below.

The IEC/UK IDMT curves conform to the following formula:

$$t = T \times \left(\frac{K}{(I/Is)^{\alpha} - 1} + L \right)$$

The IEEE/US IDMT curves conform to the following formula:

$$t = \frac{TD}{7} \times \left(\frac{K}{(I/Is)^{\alpha} - 1} + L \right)$$

Where: t = Operation time
K = Constant
I = Measured current
Is = Current threshold setting
α = Constant
L = ANSI/IEEE constant (zero for IEC/UK curves)
T = Time Multiplier Setting for IEC/UK curves
TD = Time Dial Setting for IEEE/US curves

IDMT Curve Description	Standard	K Constant	α Constant	L Constant
Standard Inverse	IEC	0.14	0.02	0
Very Inverse	IEC	13.5	1	0
Extremely Inverse	IEC	80	2	0
Long Time Inverse	UK	120	1	0
Moderately Inverse	IEEE	0.0515	0.02	0.114
Very Inverse	IEEE	19.61	2	0.491
Extremely Inverse	IEEE	28.2	2	0.1217
Inverse	US-C08	5.95	2	0.18
Short Time Inverse	US-C02	0.02394	0.02	0.01694

4.1.1 Reset Characteristics

For all IEC/UK curves, the reset characteristic is definite time only.

For all IEEE/US curves, the reset characteristic can be selected as either inverse curve or definite time.

The definite time can be set (as defined in IEC) to zero. Range 0 to 100 seconds in steps of 0.01 seconds.

The Inverse Reset characteristics are dependent upon the selected IEEE/US IDMT curve as shown in the table below.

All inverse reset curves conform to the following formula:

$$t_{Reset} = \left(\frac{TD}{7} \right) \times \left(\frac{tr}{1 - (I/Is)^{\alpha}} \right)$$

Where: α = Constant
t_{Reset} = Reset time
tr = Constant
I = Measured current
I_S = Current threshold setting
α = Constant
TD = Time Dial Setting (Same setting as that employed by IDMT curve)

IEEE/US IDMT Curve Description	Standard	tr Constant	α Constant
Moderately Inverse	IEEE	4.85	2
Very Inverse	IEEE	21.6	2
Extremely Inverse	IEEE	29.1	2
Inverse	US-C08	5.95	2
Short Time Inverse	US-C02	2.261	2

5. EARTH FAULT PROTECTION

5.1 EF Time Delay Characteristics

The earth-fault measuring elements for EF and SEF are followed by an independently selectable time delay. These time delays are identical to those of the Phase Overcurrent time delay. The reset time delay is the same as the Phase overcurrent reset time.

5.2 External Fault Detection by High-Set Overcurrent or Earth Fault Element

An ultra high-speed detection is carried out by each of the peripheral units (P742 and P743) and can generate a blocking signal from the moment of the first sample at 0.42 ms.

In this scenario de-saturation may not occur until after the scheme has eliminated the saturation condition for the external fault.

This function can be activated independently for phase faults (I>2) and for Earth Faults (I_N>2).

5.3 Zero Sequence Current (I_O) Supervision

The four current inputs (A, B, C, N) of the Peripheral Units are used to verify that the calculated zero sequence current is within the correct range for CT supervision purposes. This then provides continuous supervision of the relay's measuring chain (internal CTs, ADC, etc…).

The residual current $3I_o$ is derived from the three phases $I_a + I_b + I_c$ and compared to the measured value of I_N from the neutral CT input.

$$|3I_O - I_N|$$

During an earth fault the two values should be the same and the sum should therefore be equal to zero or below the threshold (CTS I_N> Set) and the CT supervision alarm will not be issued.

If an internal CT becomes short-circuited, a difference between the derived and measured value will appear, i.e. a CT problem has been detected and after a user settable time delay (CTS Time delay) the alarm will be issued.

This calculation is then compared to a further criteria to verify and monitor CT connections and associated current circuits.

$$|3I_O - I_N| > 0.05\ I_n + K_{CE} \times (|I_a| + |I_b| + |I_c| + |I_N|)$$

(Where KCE is a calculation error coefficient and In is the nominal current)

The calculation error coefficient in the above formula is set between 0.01 and 1 thereby allowing for small discrepancies and preventing false blocking of the differential elements whilst the constant value of 0.05 I_n provides stability under no load or low load conditions.

The main causes for alarms from zero sequence current calculations are:

- Commissioning with load current - detection of connection errors (input inverted/rated current incorrect)
- Maintenance with load current - Bypass of analogue input, when a separate neutral CT is made available.
- Failure of an analogue channel - e.g. A/D converter failure

Once detected, the alarm will be issued after a user settable time delay (Alarm Delay T_{CE}).

Because the Peripheral Units sample at 2400Hz, discrepancies between the measured and derived values are identified and responded to very quickly. If any anomaly arises for either of the above calculations, the differential elements associated with the faulty Peripheral Unit can be instantaneously blocked (when 'I_0 superv. blocking" is set to 87BBP&87BBN). The blocking signal remains in place for 10ms with an alarm signal sent after the T_{CE} time delay. The time delay is usually set above the time required to trip under fault conditions.

5.4 CT Supervision

In addition to the zero sequence (I_0) supervision, the CT Supervision detects a CT Failure.

If a current is present in the CT (>10% IN), the difference between the magnitude of the current measured by two phases should not exceed 50%. The Peripheral Unit displays an alarm when the “CTS timer alarm” time delay is elapsed.

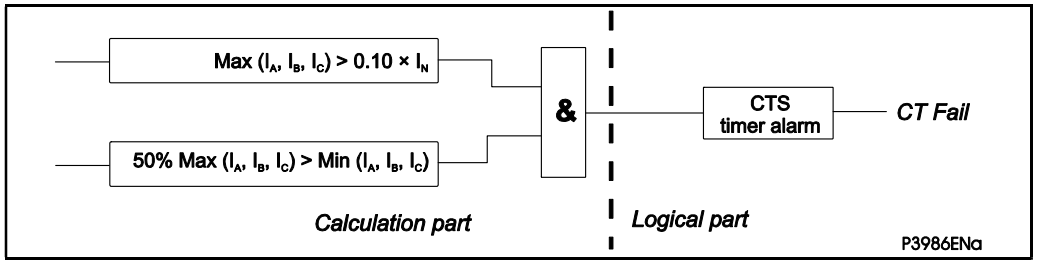

Figure 14: CT Supervision

5.5 Protection Signaling Introduction

Unit protection schemes can be formed by several IEDs located remotely from each other and some distance protection schemes. Such unit protection schemes need communication between each location to achieve a unit protection function. This communication is known as protection signalling or teleprotection. Communications facilities are also needed when remote circuit breakers need to be operated due to a local event. This communication is known as intertripping.

The communication messages involved may be quite simple, involving instructions for the receiving device to take some defined action (trip, block, etc.), or it may be the passing of measured data in some form from one device to another (as in a unit protection scheme).

Various types of communication links are available for protection signalling, for example:

- Private pilot wires installed by the utility
- Pilot wires or channels rented from a communications company
- Carrier channels at high frequencies over the power lines
- Radio channels at very high or ultra high frequencies
- Optical fibres

Whether or not a particular link is used depends on factors such as the availability of an appropriate communication network, the distance between protection relaying points, the terrain over which the power network is constructed, as well as cost.

Protection signalling is used to implement unit protection schemes, provide teleprotection commands, or implement intertripping between circuit breakers.

5.5.1 Unit Protection Schemes:

Phase comparison and current differential schemes use signalling to convey information concerning the relaying quantity - phase angle of current and phase and magnitude of current respectively - between local and remote relaying points. Comparison of local and remote signals provides the basis for both fault detection and discrimination of the schemes.

5.5.2 Teleprotection Commands

Some Protection schemes use signalling to convey commands between local and remote relaying points. Receipt of the information is used to aid or speed up clearance of faults within a protected zone or to prevent tripping from faults outside a protected zone.

Teleprotection systems are often referred to by their mode of operation, or the role of the teleprotection command in the system.

Three types of teleprotection command are commonly encountered, direct tripping, permissive tripping and blocking schemes.

Direct Tripping

In direct tripping applications (often described by the generic term: “intertripping”), teleprotection signals are sent directly to a master trip device. Receipt of a command causes circuit breaker operation without any further qualification. Communication must be reliable and secure because any signal detected at the receiving end causes a trip of the circuit at that end. The communications system must be designed so that interference on the communication circuit does not cause spurious trips. If a spurious trip occurs, the primary system might be unnecessarily isolated.

Permissive Tripping

Permissive trip commands are monitored by a protection device. The circuit breaker is tripped when receipt of the command coincides with a ‘start’ condition being detected by the protection at the receiving. Requirements for the communications channel are less onerous than for direct tripping schemes, since receipt of an incorrect signal must coincide with a ‘start’ of the receiving end protection for a trip operation to take place. Permissive tripping is used to speed up tripping for faults occurring within a protected zone.

Blocking Scheme

Blocking commands are initiated by a protection element that detects faults external to the protected zone. Detection of an external fault at the local end of a protected circuit results in a blocking signal being transmitted to the remote end. At the remote end, receipt of the blocking signal prevents the remote end protection operating if it had detected the external fault. Loss of the communications channel is less serious for this scheme than in others as loss of the channel does not result in a failure to trip when required. However, the risk of a spurious trip is higher.

The following figure shows the requirements for the three channel types:

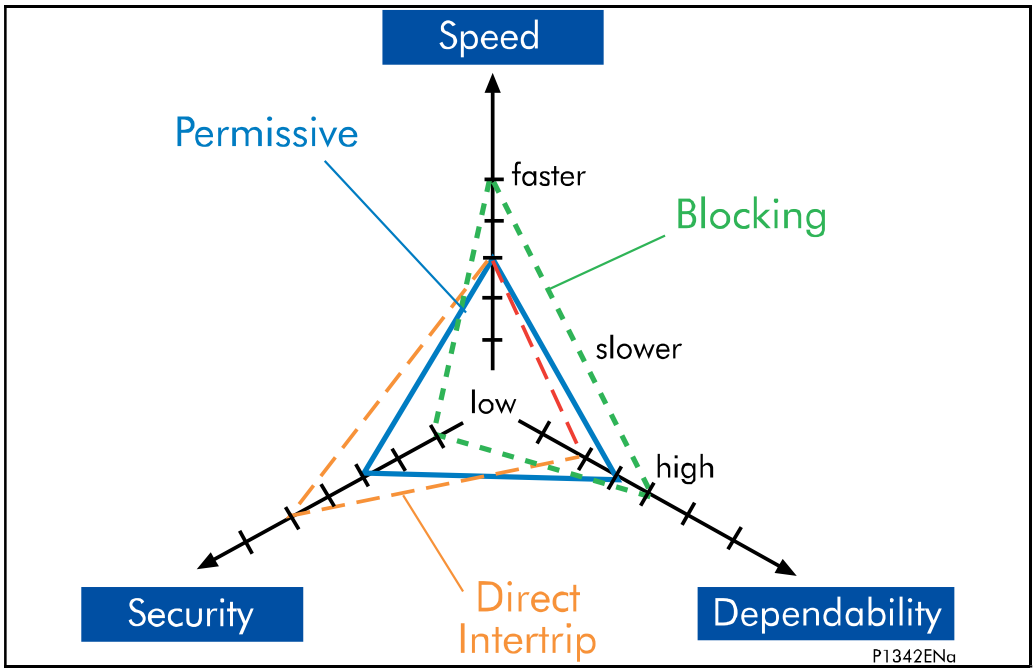

Figure 15: Pictorial Comparison of Operating Modes

This diagram shows that a blocking signal should be fast and dependable; a direct intertrip signal should be very secure and a permissive signal is an intermediate compromise of speed, security and dependability.

In MODEM applications, all three modes can be applied to selected signaling bits within each message.

In InterMiCOM64 applications, the framing and error checking of a single command message is sufficient to meet the security of a permissive application, while the speed is sufficiently fast to meet the needs of a blocking scheme. Accordingly, in InterMiCOM64 applications, there is no differentiation between blocking commands or permissive commands, so that only signals being used for direct intertripping with higher security requirements need to be differentiated from those in permissive (or blocking) schemes.

5.6 EIA(RS)232 InterMiCOM ("MODEM InterMiCOM")

5.6.1 Communications Media

MODEM InterMiCOM can transfer up to eight commands over one communication channel. Due to recent expansions in communication networks, most signaling channels are now digital schemes utilizing multiplexed communications links and for this reason, MODEM InterMiCOM provides a standard EIA(RS)232 output using digital signaling techniques. This digital signal can then be converted using suitable devices to a range of different communications media as required. The EIA(RS)232 output may alternatively be connected to MODEMs for use over analogue links.

Electrical Teleprotection is compliant with IEC 60834-1:1999. For your application, you can customise individual command signals to the differing requirements of security, speed, and dependability as defined in this standard.

5.6.2 InterMiCOM Statistics & Diagnostics

It is possible to hide the channel diagnostics and statistics from view by setting the **Ch Statistics** and/or **Ch Diagnostics** cells to **Invisible**. All channel statistics are reset when the relay is powered up, or by user selection using the **Reset Statistics** cell.

5.7 InterMiCOM Teleprotection Introduction

Electrical Teleprotection is an optional feature that uses communications links to create protection schemes. It can be used to replace hard wiring between dedicated relay output contacts and digital input circuits. Two products equipped with electrical teleprotection can connect and exchange commands using a communication link. It is typically used to implement teleprotection schemes.

Using full duplex communications, eight binary command signals can be sent in each direction between connected products. The communication connection complies with the EIA(RS)232 standard. Ports may be connected directly or using modems. Alternatively, EIA(RS)232 converters can be used for connecting to other media such as optical fibres.

Communications statistics and diagnostics enable you to monitor the integrity of the communications link, and a loopback feature is available to help with testing.

5.7.1 Implementation

Electrical InterMiCOM is configured using a combination of settings in the **INTERMICOM COMMS** column, settings in the **INTERMICOM CONF** column, and the programmable scheme logic (PSL).

The eight command signals are mapped to DDB signals within the product using the PSL.

Signals being sent to a remote terminal are referenced in the PSL as **IM Output 1 - IM Output 8**. Signals received from the remote terminal are referenced as **IM Input 1 - IM Input 8**.

Note: As well as the optional Modem InterMiCOM, some products are available with a feature called InterMiCOM64 (IM64). The functionality and assignment of commands in InterMiCOM and InterMiCOM64 are similar, but they act independently and are configured independently.

5.7.2 Configuration

Electrical Teleprotection is compliant with IEC 60834-1:1999. For your application, you can customise individual command signals to the differing requirements of security, speed, and dependability as defined in this standard.

You customise the command signals using the **IM# Cmd Type** cell in the **INTERMICOM CONF** column.

Any command signal can be configured for:

- Direct intertripping by selecting 'Direct'. (this is the most secure signalling but incurs a time delay to deliver the security).
- Blocking applications by selecting 'Blocking'. (this is the fastest signalling)
- Permissive intertripping applications by selecting 'Permissive. (this is dependable signalling that balances speed and security)

You can also select to 'Disable' the command.

Note: When used in the context of a setting, '#' specifies which command signal (1-8) bit is being configured.

To ensure that command signals are processed only by their intended recipient, the command signals are packaged into a message (sometimes referred to as a telegram) which contains an address field. A sending device sets a pattern in this field. A receiving device must be set to match this pattern in the address field before the commands will be acted upon. 10 patterns have been carefully chosen for maximum security. You need to choose which ones to use and set them using the **Source Address** and **Receive Address** cells in the **INTERMICOM COMMS** column.

The value set in the **Source Address** of the transmitting device should match that set in the **Receive Address** of the receiving device. For example, set **Source Address** to *1* at a local terminal and set **Receive Address** to *1* at the remote terminal.

The Source Address and Receive Address settings in the device should be set to different values to avoid false operation under inadvertent loopback conditions.

Where more than one pair of devices is likely to share a communication link, you should set each pair to use a different pair of address values.

Electrical InterMiCOM has been designed to be resilient to noise on communications links, but during severe noise conditions, the communication may fail. If this is the case, an alarm is raised, and you can choose how the input signals are managed using the **IM# FallBackMode** cell in the **INTERMICOM CONF** column:

- If you choose **Latched**, the last valid command to be received can be maintained until a new valid message is received.
- If you choose Default, the signal will revert to a default value after the period defined in the **IM# FrameSyncTim** setting has expired. You choose the default value using the **IM# DefaultValue** setting.

Subsequent receipt of a full valid message will reset the alarm, and the new command signals will be used.

As well as the settings described above, you will need to assign input and output signals in the Programmable Scheme Logic (PSL). Use the 'Integral Tripping' buttons to create the logic you want to apply. A typical example is shown in the following figure:

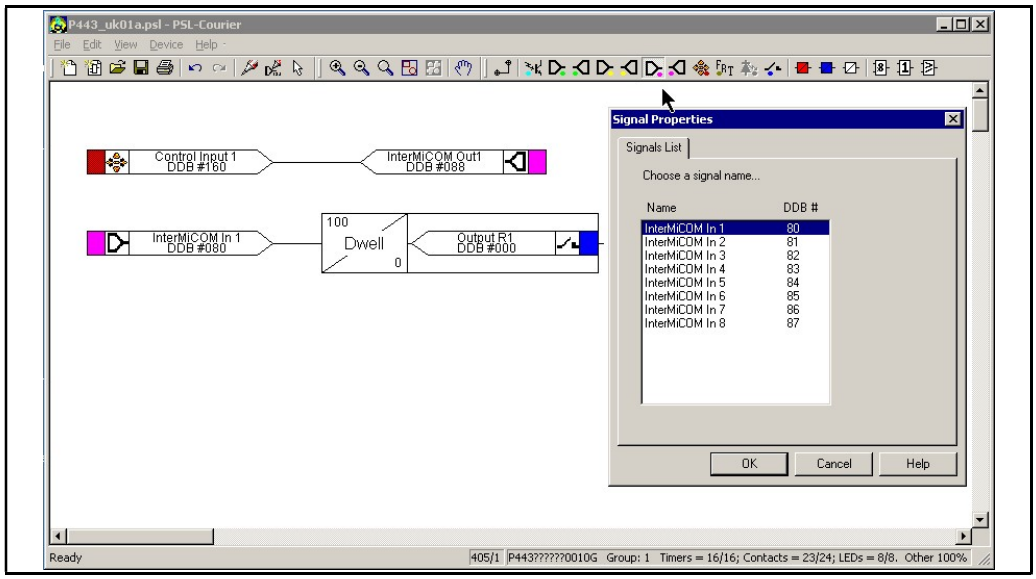

Figure 16: Example Assignment of InterMiCOM Signals within the PSL

Note: When an Electrical InterMiCOM signal is sent from a local terminal, only the remote terminal will react to the command. The local terminal will only react to commands initiated at the remote terminal.

5.8 Connecting to Electrical InterMiCOM

Electrical InterMiCOM uses EIA(RS)232 communication presented on a 9-pin 'D' type connector. The connector is labelled SK5 and is located at the bottom of the 2nd Rear communication board. The port is configured as standard DTE (Data Terminating Equipment).

Pin	Acronym	InterMiCOM Usage
1	DCD	"Data Carrier Detect" is only used when connecting to modems otherwise this should be tied high by connecting to terminal 4.
2	RxD	"Receive Data"
3	TxD	"Transmit Data"
4	DTR	"Data Terminal Ready" is permanently tied high by the hardware since InterMiCOM requires a permanently open communication channel.
5	GND	"Signal Ground"
6	Not used	-
7	RTS	"Ready To Send" is permanently tied high by the hardware since InterMiCOM requires a permanently open communication channel.
8	Not used	-
9	Not used	-

5.8.1 Short Distance

EIA(RS)232 is suitable for short distance connections only - less than 15m. Where this limitation is not a problem, direct connection between devices is possible. For this case, inter-device connections should be made as shown in the following figure:

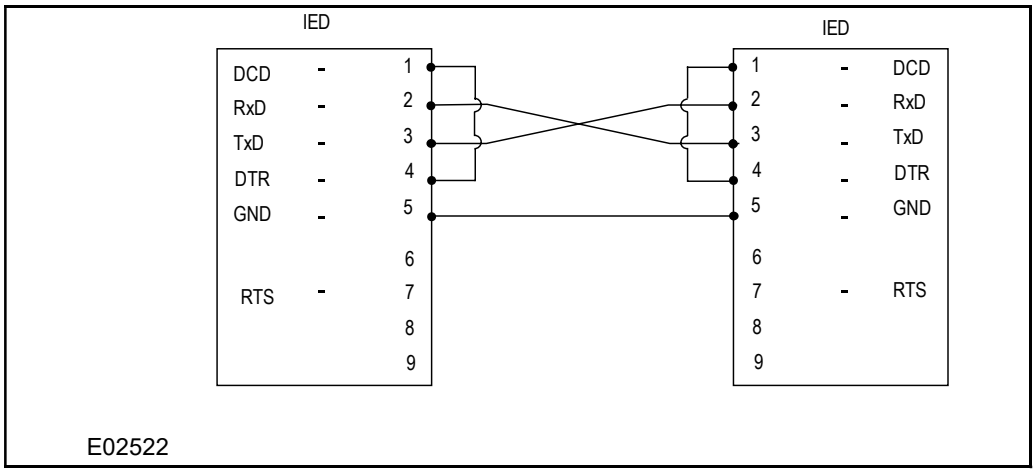

Figure 17: Direct Connection

For direct connection, the maximum baud rate can generally be used.

5.8.2 Long Distance

EIA(RS)232 is suitable for short distance connections only - less than 15m. Where this limitation is a problem, direct connection between devices is not possible. For this case, inter-device connections should be made as shown below the figure below.

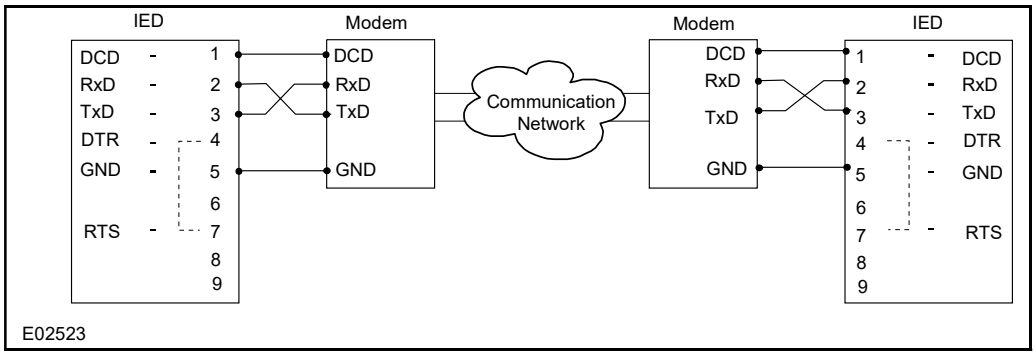

Figure 18: InterMiCOM Teleprotection using Modems

This type of connection should be used when connecting to devices that have the ability to control the DCD line. The baud rate should be chosen to be suitable for the communications network. If the Modem does not support the DCD function, the DCD terminal on the IED should be connected to the DTR terminal.

.

6. CURRENT TRANSFORMERS

6.1 CT Saturation Detection

Innovative methods are used to detect CT saturation in the P74x. The values associated with the CT saturation algorithms are entered into the Peripheral Unit's CT ratio menu column and are used to define the CT's characteristic. The algorithms for CT saturation detection are executed in the peripheral units.

The first algorithm to be examined is the detection of variation of current.

The PU calculates the derived current and compares it to the magnitude of the waveform. With 2400Hz sampling, the maximum variation between 2 successive samples of sinusoidal current cannot exceed 14% of the previous period's magnitude.

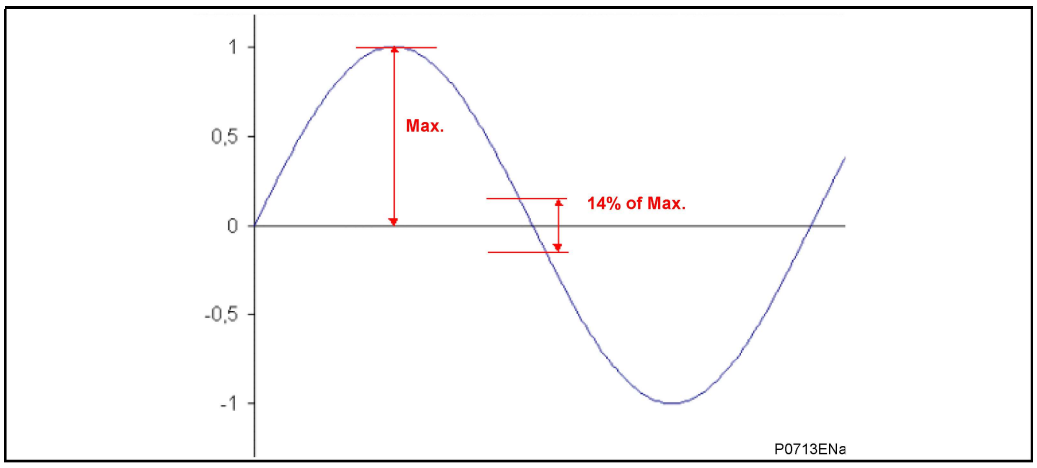

Figure 19: Current Variation

The magnitude of the current is the maximum value of the current measure during the last period with a minimum of 50% of nominal current. A variation is detected is derived current exceed 20% of this magnitude.

This instantaneous value is maintained at 150ms for the first variation then 50ms for the next ones, as shown as figure 20:

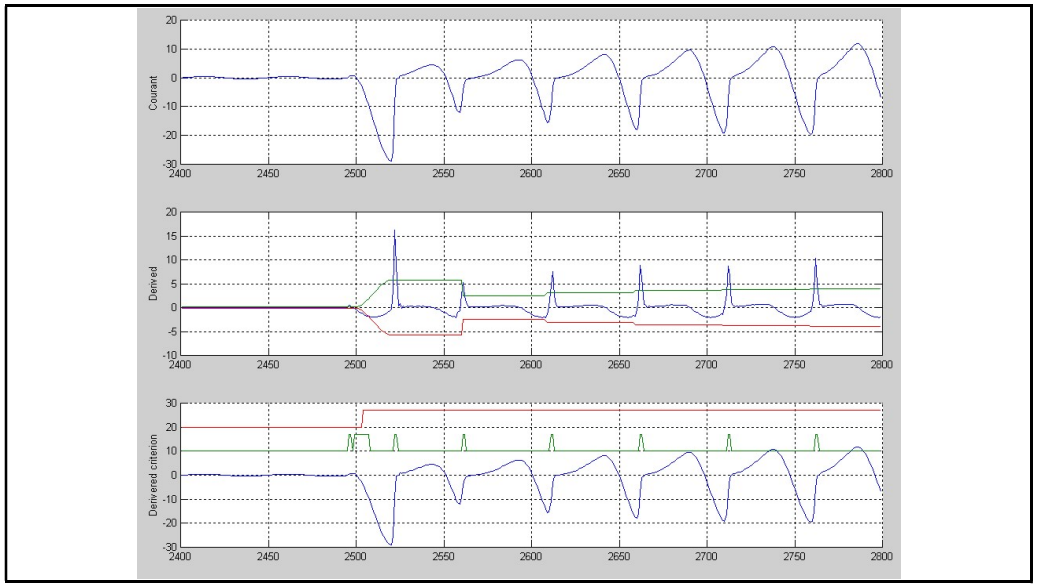

Figure 20: Current Variation Criterion

The second algorithm, by integration of the secondary current, presumes of maximum flux in the HV CT core.

The flux calculation starts when the first variation of current is detected, then if the calculated flux reached 20% of the maximum flux, a CT saturation is presumed as shown in figure 21:

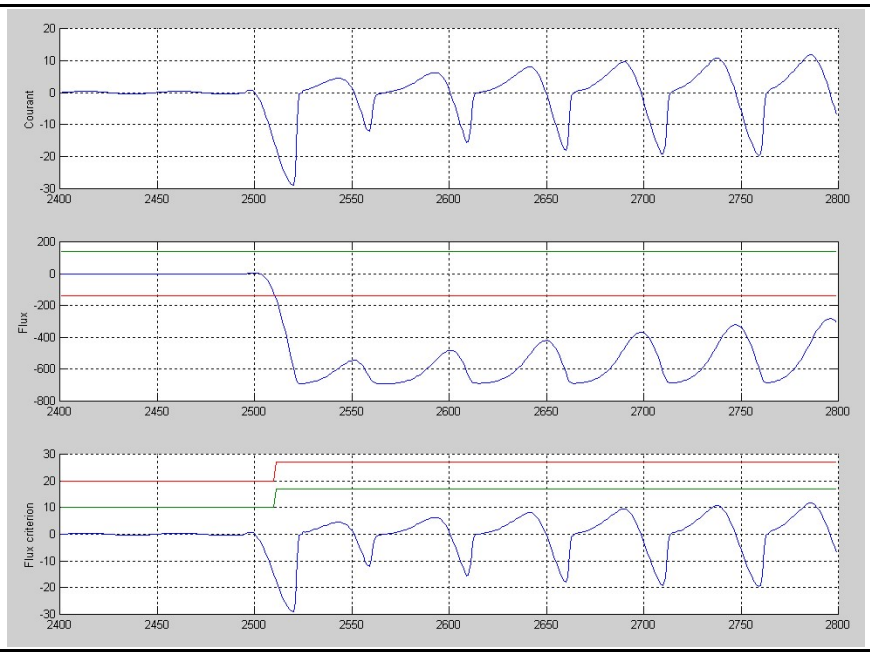

Figure 21: Determination of Signal Quality in Peripheral Unit

CT saturation detection starts at the first variation of current detected and stops if there is no variation during 100ms.

The third algorithm blocks the occurrence of saturation for as long as the current increases during the first half-cycle.

Blocking starts on detection of the first current variation. Then, as soon as the current is reversed, CT saturation is permitted as shown in the figure below.

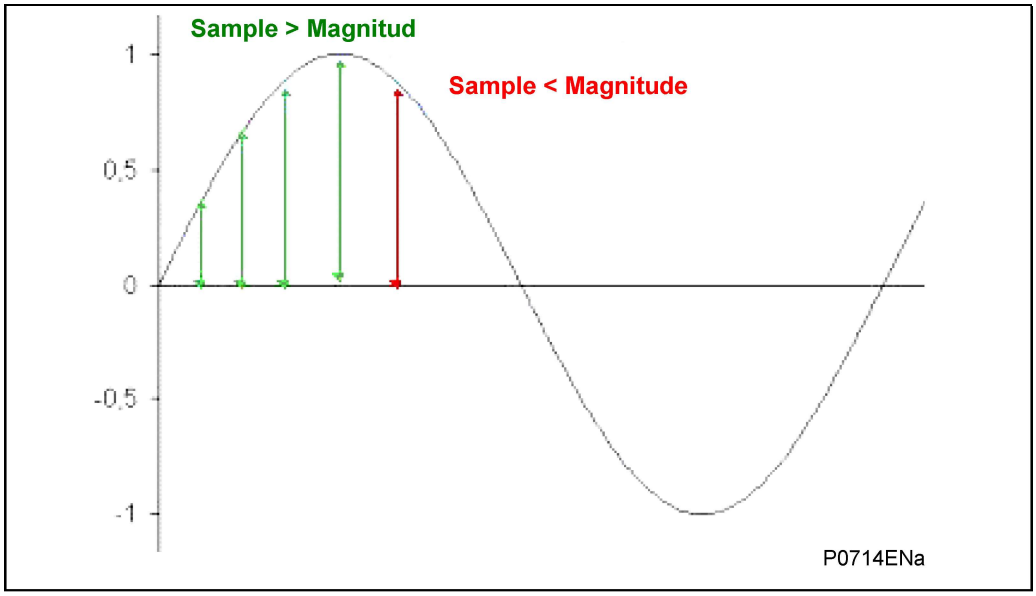

Figure 22: Determination of Signal Quality in the Peripheral Unit

CT saturation is detected after a variation of current, detection of a presumption of maximum flux and current reversal, as shown figure 23: c When CT saturation appears, a blocking order is sent to the CU to block all zones (the check zone is blocked).

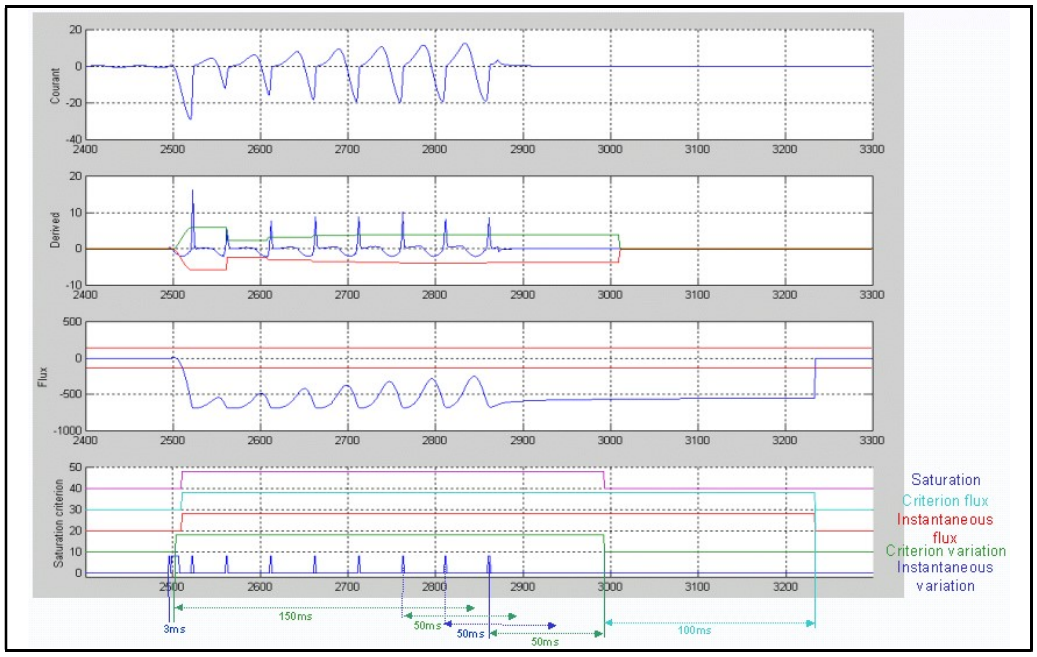

Figure 23: CT Saturation Reset

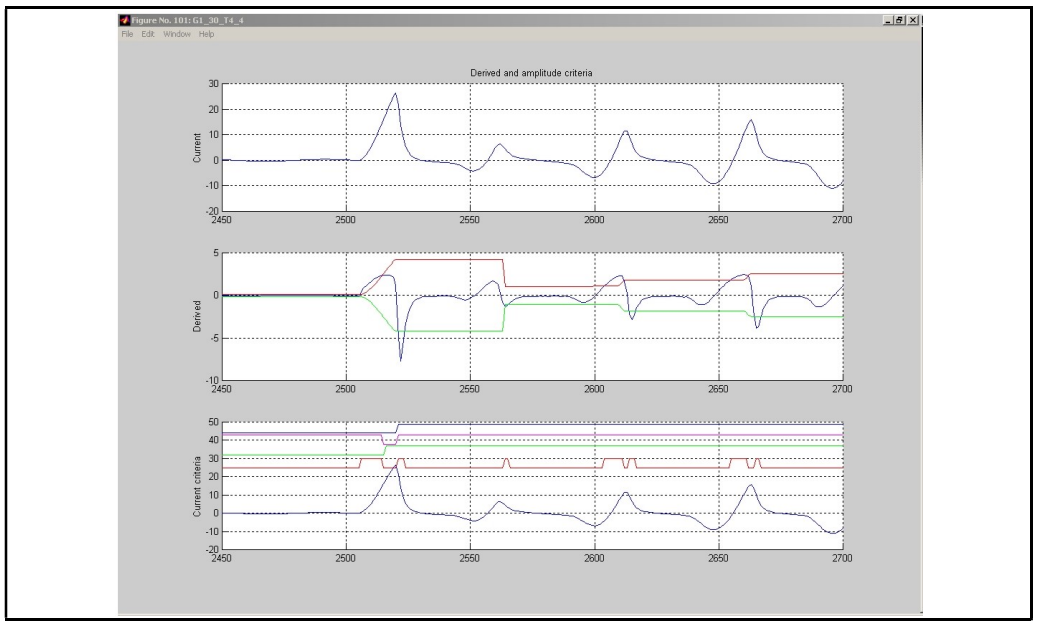

Figure 24: CT Saturation

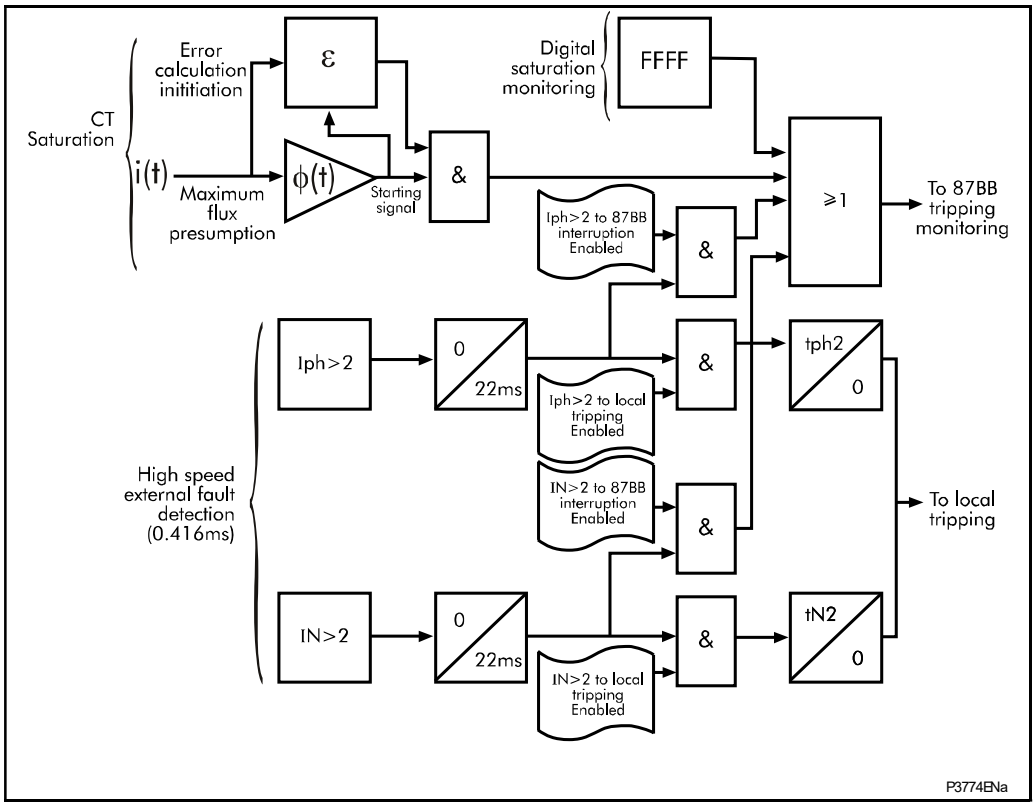

Figure 25: Determination of Signal Quality in the Peripheral Unit

CT Location

There are no restrictions imposed as to the location of current transformers within the system, however, when the topological model is created, the position and orientation of the current transformers must be defined correctly to ensure the correct operation of the protection.

A suggested current transformer location is to position the current transformer for the busbar protection, line side of the circuit breaker whilst the line protection current transformers are positioned busbar side of the circuit breaker. This then covers the largest possible busbar zone providing an overlap with the line protection therefore eliminating any possible blind spots. This is shown in Figure below.

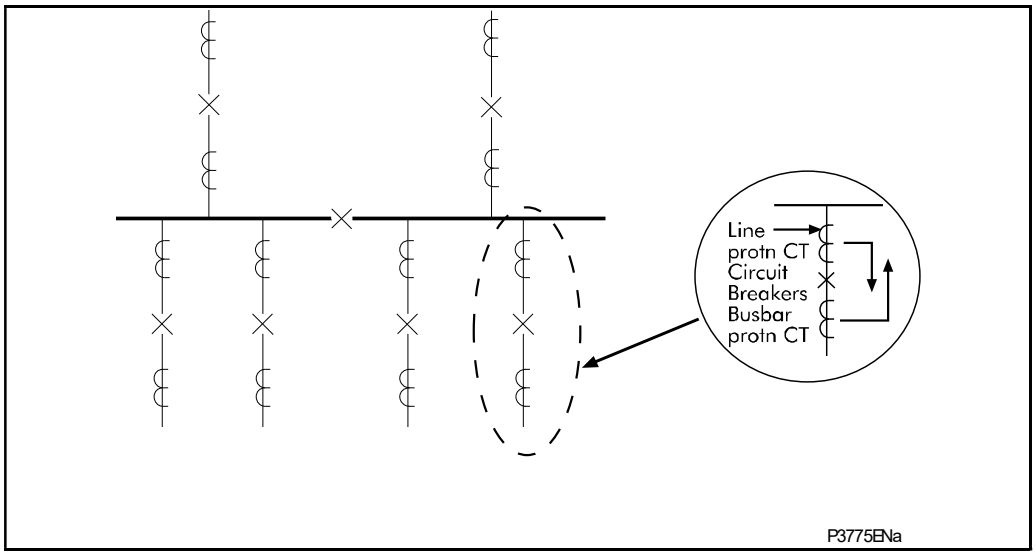

Figure 26: CT Location

7. ISOLATOR STATE MONITORING FEATURES

MiCOM relays can be set to monitor normally open (89A) and normally closed (89B) auxiliary contacts of the isolators. Under healthy conditions, these contacts will be in opposite states. Should both sets of contacts be open, this would indicate one of the following conditions:

- Auxiliary contacts/wiring defective
- Isolator is defective
- Isolator is in isolated position

Should both sets of contacts be closed, only one of the following two conditions would apply:

- Auxiliary contacts/wiring defective
- Isolator is defective

A normally open/normally closed output contact has to be assigned to this function via the programmable scheme logic (PSL). The time delay is set to avoid unwanted operation during normal switching duties. If any of the above conditions exist, an alarm will be issued after the time delay set in the PSL.

In the PSL Qx must be used following the two options:

- 89A or 89B
- Both 89A and 89B

If both 89A and 89B are used, then status information will be available and in addition a discrepancy alarm will be possible. 89A and 89B inputs are assigned to relay opto-isolated inputs via the PSL.

When only one status information can be wired to a Peripheral Unit, it is recommended to use the 89B (open) and link it inversed through a NAND gate or an NOR gate to the Isolator closed position in the PSL.

8. CIRCUIT BREAKER STATE MONITORING FEATURES

CB State monitoring is used to verify the open or closed state of a circuit breaker. Most circuit breakers have auxiliary contacts through which they transmit their status (open or closed) to control equipment such as IEDs.

These auxiliary contacts are known as:

- 52A for contacts that follow the state of the CB
- 52B for contacts that are in opposition to the state of the CB

This device can be set to monitor both types of circuit breaker state indication. If the state is unknown for some reason, an alarm can be raised.

Some CBs provide both sets of contacts. If this is the case, these contacts will normally be in opposite states. Should both sets of contacts be open, this would indicate one of the following conditions:

- Auxiliary contacts/wiring defective
- Circuit Breaker (CB) is defective
- CB is in isolated position

Should both sets of contacts be closed, only one of the following two conditions would apply:

- Auxiliary contacts/wiring defective
- Circuit Breaker (CB) is defective

If any of the above conditions exist, an alarm will be issued after a 5 s time delay. An output contact can be assigned to this function via the programmable scheme logic (PSL). The time delay is set to avoid unwanted operation during normal switching duties.

In the PSL **CB AUX** can be used to set one of the following options:

- None
- Both 52A and 52B (triphase - 2 optos)
- Both 52A and 52B (per phase - 6 optos)

No CB status available directly affects any function within the relay that requires this signal. For example, CB control, Topology for buscoupler, etc.

If both 52A and 52B are used then status information will be available and in addition a discrepancy alarm will be possible, according to the following table. 52A and 52B inputs are assigned to relay opto-isolated inputs via the PSL.

Auxiliary Contact Position		CB State Detected	Action
52A	52B		
Open	Closed	Breaker Open	Circuit breaker healthy
Closed	Open	Breaker Closed	Circuit breaker healthy
Closed	Closed	State Unknown	Alarm raised if the condition persists for longer than “CB supervision timer” delay time setting
Open	Open	State Unknown	Alarm raised if the condition persists for longer than “CB supervision timer” delay time setting

In the bus sections and bus couplers, the position used in the topology algorithm is open when the ‘CB State Detected’ is ‘Breaker Open’. In all other cases, the position closed will be used to calculate the topology. CB auxiliary contacts and Manual CB closed command are required for all bus-sections and bus-couplers. If the **CT in Zone Func** is set to **Isolator + CB** then auxiliary contacts are required for feeders as well. **Man. CB Close Cmd** (DDB#120) should be mapped to the external CB Close Pulse if Circuit Breaker status is provided to the relay.

They are not compulsory for feeders, if the **CT in Zone Func** is set to isolator. However, if they are supplied with the scheme, better operation is possible:

- Dead Zone fault, the CB position is required (send remote trip order to the other end of the line).
- CB supervision.

In that case it is best to provide the Manual CB closing order.

No specific auxiliary contacts are required but ideally one 52a and one 52b should be available.

The faster these contacts operate (following real CB operation) the better it is.

When 52a=52b=0 or 52a=52b=1 (most of the time during operation of the CB, but not only), the CB is considered as closed in the topology.

In the PSL:

If 52a is per pole, 52b should be per pole.

If 52a is 3phase, 52b should be 3phase too.

It is recommended to use early make late break contacts for the coupler breaker.

If they do not exist, the CB Close command shall be used to force closed the breaker during the closing process; this choice is made in the PSL.

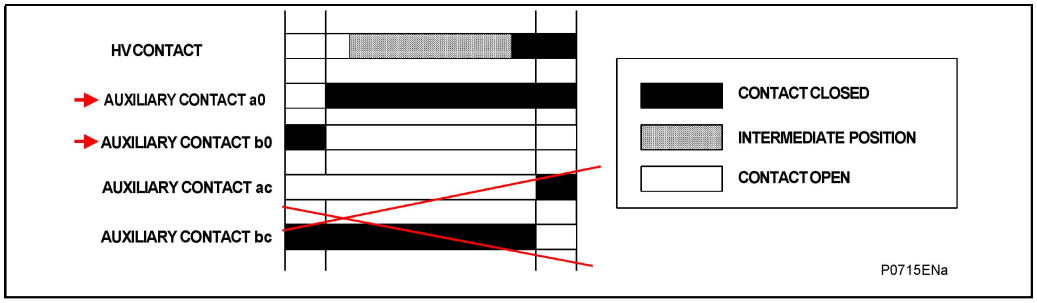

Figure 27: CB State Monitoring Features

9. CIRCUIT BREAKER CONTROL

The relay includes the following options for control of a single circuit breaker:

- Local tripping and closing, via the relay menu
- Local tripping and closing, via relay opto-isolated inputs

A manual trip will be permitted provided that the circuit breaker is initially closed. Likewise, a close command can only be issued if the CB is initially open. To confirm these states, it will be necessary to use the breaker 52A and/or 52B contacts via PSL. If no CB auxiliary contacts are available, no CB control (manual or auto) will be possible.

Once a CB Close command is initiated the output contact can be set to operate following a user defined time delay (**Man Close Dela**y). This would give personnel time to move away from the circuit breaker following the close command. This time delay will apply to all manual CB Close commands.

The length of the trip or close control pulse can be set via the **Man Trip Pulse** and **Man Close Pulse** settings respectively. These should be set long enough to ensure the breaker has completed its open or close cycle before the pulse has elapsed.

Note: The manual trip and close commands are found in the **SYSTEM DATA** column and the hotkey menu.

If an attempt to close the breaker is being made, and a protection trip signal is generated, the protection trip command overrides the close command.

If the CB fails to respond to the control command (indicated by no change in the state of CB Status inputs) a ‘CB Fail Trip Control’ or ‘CB Fail Close Control’ alarm is generated after the relevant trip or close pulses have expired. These alarms can be viewed on the LCD display remotely, or can be assigned to operate output contacts using the programmable scheme logic (PSL).

9.1 CB Control using the IED Menu

You can control manual trips and closes with the **CB Trip/Close** command in the **SYSTEM DATA** column. This can be set to **No Operation**, **Trip**, or **Close** accordingly.

For this to work you must set the **CB control by** cell to option 1 **Loca**l, option 3 **Local+Remote**, option 5 **Opto+local**, or option 7 **Opto+Rem+local** in the **CB CONTROL** column.

9.2 CB Control using the Hotkeys

The hotkeys allow you to manually trip and close the CB without the need to enter the **SYSTEM DATA** column. For this to work you have to set the **CB control by** cell to option 1 **Loca**l, option 3 **Local+Remote**, option 5 **Opto+local**, or option 7 **Opto+Rem+local** in the **CB CONTROL** column.

CB control using the hotkey is achieved by pressing the right-hand button directly below LCD screen. This button is only enabled if:

- The **CB Control by** setting is set to one of the options where local control is possible (option 1,3,5, or 7)

If the CB is currently closed, the command text on the bottom right of the LCD screen will read **Trip**. Conversely, if the CB is currently open, the command text will read **Close**.

If you execute a **Trip**, a screen with the CB status will be displayed once the command has been completed. If you execute a **Close**, a screen with a timing bar will appear while the command is being executed. This screen also gives you the option to cancel or restart the close procedure. The time delay is determined by the **Man Close Delay** setting in the **CB CONTROL** menu. When the command has been executed, a screen confirming the present status of the circuit breaker is displayed. You are then prompted to select the next appropriate command or exit.

If no keys are pressed for a period of 5 seconds while waiting for the command confirmation, the device will revert to showing the CB Status. If no key presses are made for a period of 25 seconds while displaying the CB status screen, the device will revert to the default screen.

To avoid accidental operation of the trip and close functionality, the hotkey CB control commands are disabled for 10 seconds after exiting the hotkey menu.

The hotkey functionality is summarised graphically below:

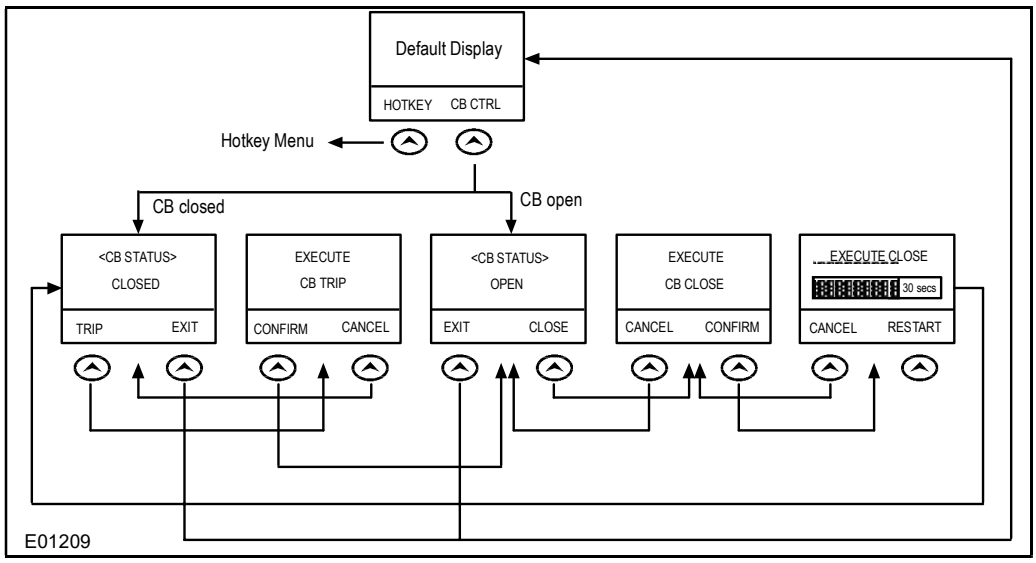

Figure 28: HOTKEY Menu Navigation

9.3 CB Control using the Function Keys

For most models, you can also use the function keys to allow direct control of the circuit breaker. This has the advantage over hotkeys, that the LEDs associated with the function keys can indicate the status of the CB. The default PSL is set up such that Function key 2 initiates a trip and Function key 3 initiates a close. For this to work you have to set the CB control by cell to option 5 **Opto+local**, or option 7 **Opto+Rem+local** in the **CB CONTROL** column.

As shown below, function keys 2 and 3 have already been assigned to CB control in the default PSL.

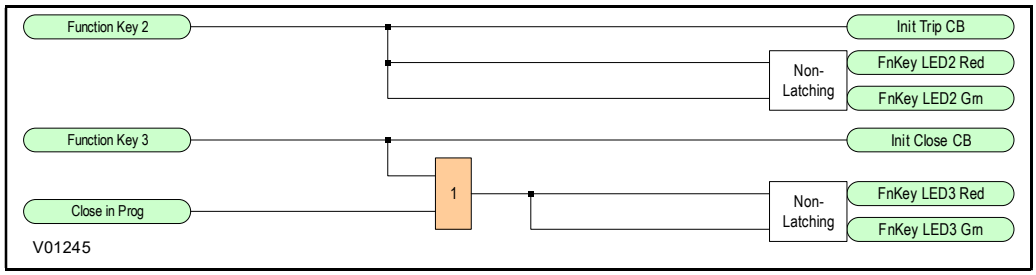

Figure 29: CB Control via Function Keys Default PSL

The programmable function key LEDs have been mapped such that they will indicate yellow whilst the keys are activated.

Note: Not all models provide function keys.

9.4 CB Control using the Opto-Inputs

Certain applications may require the use of push buttons or other external signals to control the various CB control operations. It is possible to connect such push buttons and signals to opto-inputs and map these to the relevant DDB signals.

For this to work, you have to set the CB control by cell to option 4 **Opto**, option 5 **Opto+local**, option 6 **Opto+Remote**, or option 7 **Opto+Rem+local** in the **CB CONTROL** column.

9.5 Remote CB Control

Remote CB control can be achieved by setting the **CB Trip/Close** cell in the **SYSTEM DATA** column to trip or close by using a command over a communication link.

For this to work, you have to set the **CB control by** cell to option 2 **Remote**, option 3 **Local+Remote**, option 6 **Opto+Remote**, or option 7 **Opto+Rem+local** in the **CB CONTROL** column.

We recommend that you allocate separate relay output contacts for remote CB control and protection tripping. This allows you to select the control outputs using a simple local/remote selector switch as shown below. Where this feature is not required the same output contact(s) can be used for both protection and remote tripping.

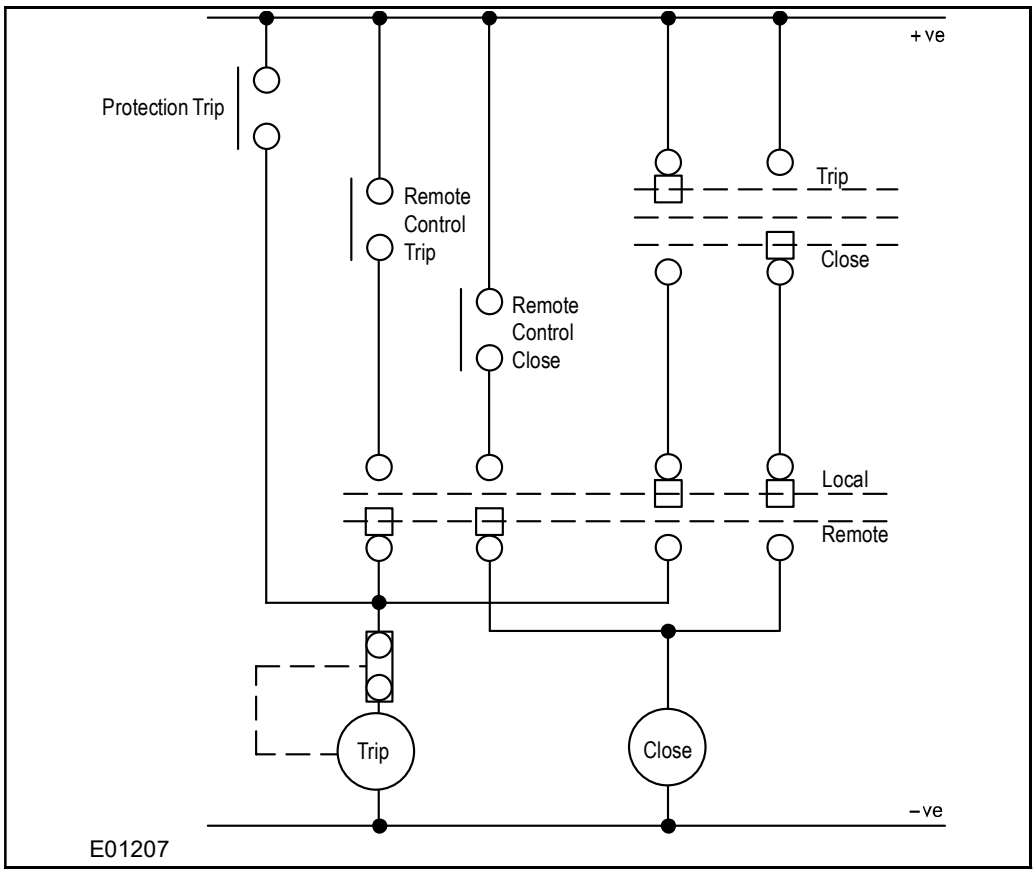

Figure 30: Remote Control of Circuit Breaker

10. OPERATION OF NON PROTECTION FUNCTIONS

10.1 Programmable Scheme Logic

10.1.1 Level settings

Name	Range	Step Size
Time delay t	0-14400000ms	1ms

10.1.2 Accuracy

Output conditioner timer	Setting ±2% or 50ms whichever is greater
Dwell conditioner timer	Setting ±2% or 50ms whichever is greater
Pulse conditioner timer	Setting ±2% or 50ms whichever is greater

10.2 Differential Current Display

When the differential currents are low, it is possible to force to 0 the value of these differential currents displayed in the column **MEASUREMENT 1** & **MEASUREMENT 2**.

When the differential currents of a zone are all lower than the threshold (on the 3 phases), the currents displayed are forced to 0.

11. COMMUNICATIONS BETWEEN PU AND CU

The P74x scheme can be either centralised in one cubicle or distributed in cubicles housing other protection depending on the availability of space. Either way the Peripheral Units still need to communicate with the central unit and vice versa. Each central unit has up to 7 communication boards each accommodating inputs from 4 peripheral units. Therefore, each central unit can accommodate up to 28 peripheral units.

Note: From software E1.0, model 50, The CU and all the Pus must have the same model number (digits 12 & 13). When a PU with an incompatible model number and software reference is connected to a Central Unit, the CU will not recognize the PU and will show the Locking Level 2 Error and alarm.

11.1 Communications Link

The following communication media is used for the communication channel within the P74x scheme. The data rate is 2.5 Mbits/sec.

11.2 Direct Optical Fibre Link, 850nm Multi-mode Fibre

The units are connected directly using two 850nm multi-mode optical fibres for each signalling channel. Multi-mode fibre type 62.5/125µm is suitable and standard BFOC/2.5 type fibre optic connectors are used. These are commonly known as “ST” connectors (“ST” is a registered trademark of AT&T).

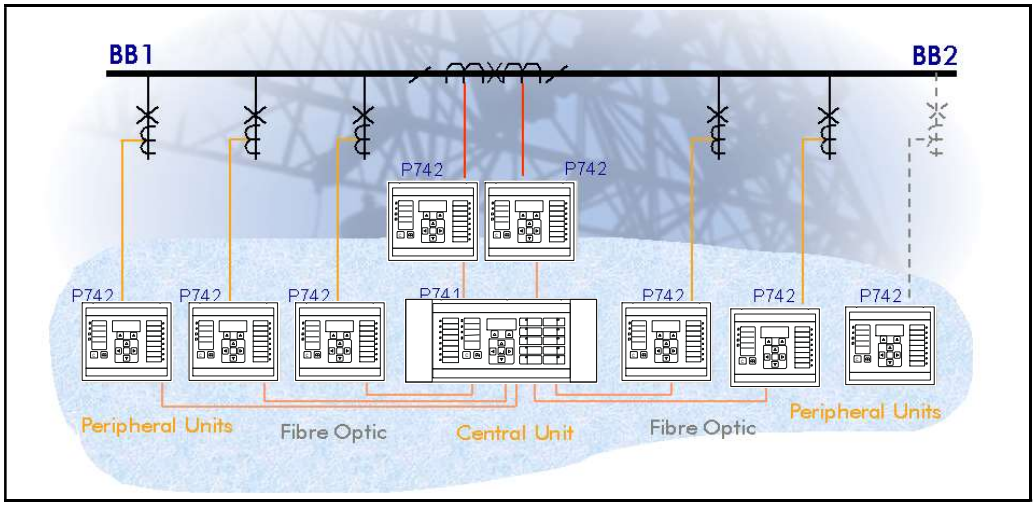

Figure 31: Module Interconnection

This is typically suitable for connection up to 1km.

11.3 Optical Budgets

When using fibre optics as a method of communication the type of fibre used and the distance between devices needs to be considered. The following table shows the optical budgets of the communications interface.

Parameter	850nm Multi Mode
Min. transmit output level (average power)	-19.8dBm
Receiver sensitivity (average power)	-25.4dBm
Optical budget	5.6dB
Less safety margin (3dB)	2.6dB 3dB
Typical cable loss	2.6dB/km
Max. transmission distance	1km

The total optical budget is given by transmitter output level minus the receiver sensitivity and will indicate the total allowable losses that can be tolerated between devices. A safety margin of 3dB is also included in the above table. This allows for degradation of the fibre as a result of ageing and any losses in cable joints. The remainder of the losses will come from the fibre itself. The figures given are typical only and should only be used as a guide.

11.4 Trip LED Logic

The trip LED can be reset when the flags for the last fault are displayed or via dedicated DDBs. The flags are displayed automatically after a trip occurs or can be selected in the fault record menu. The reset of trip LED and the fault records is performed by pressing the **clear** key once the fault record has been read.

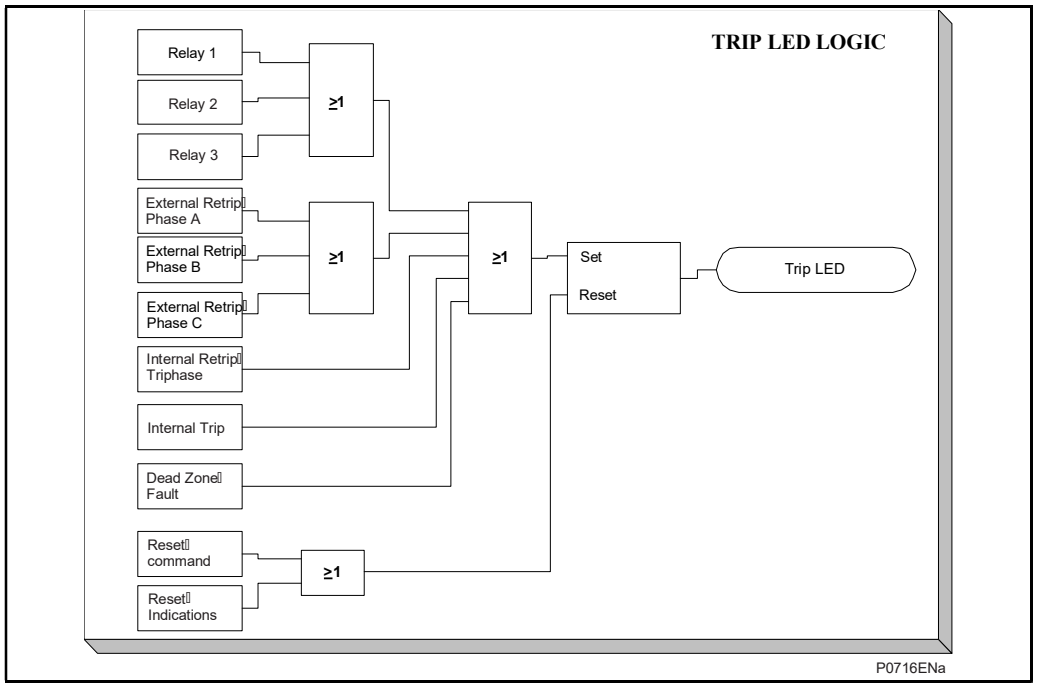

Figure 32:TRIP LED Logic Diagram

11.5 Function Keys

For most models, several programmable function keys are available. This allows you to assign function keys to control functionality via the programmable scheme logic (PSL). Each function key is associated with a programmable tri-colour LED, which you can program to give the desired indication on activation of the function key.

These function keys can be used to trigger any function that they are connected to as part of the PSL. The function key commands are found in the **FUNCTION KEYS** column.

Each function key is associated with a DDB signal. You can map these DDB signals to any function available in the PSL.

The Fn Key Status cell displays the status (energised or de-energised) of the function keys by means of a binary string, where each bit represents a function key starting with bit 0 for function key 1.

Each function key has three settings associated with it, as shown:

- **Fn Key (n)**, which enables or disables the function key
- **Fn Key (n) Mode**, which allows you to configure the key as toggled or normal
- **Fn Key (n) label**, which allows you to define the function key text that is displayed

The **Fn Key (n)** cell is used to enable (unlock) or disable (unlock) the function key signals in PSL. The Lock setting has been provided to prevent further activation on subsequent key presses. This allows function keys that are set to Toggled mode and their DDB signal active 'high', to be locked in their active state therefore preventing any further key presses from deactivating the associated function. Locking a function key that is set to the "Normal" mode causes the associated DDB signals to be permanently off. This safety feature prevents any inadvertent function key presses from activating or deactivating critical functions.

When the **Fn Key (n) Mode** cell is set to Toggle, the function key DDB signal output will remain in the set state until a reset command is given. In the Normal mode, the function key DDB signal will remain energised for as long as the function key is pressed and will then reset automatically. In this mode, a minimum pulse duration can be programmed by adding a minimum pulse timer to the function key DDB output signal.

The **Fn Key Label** cell makes it possible to change the text associated with each individual function key. This text will be displayed when a function key is accessed in the function key menu, or it can be displayed in the PSL.

The status of all function keys are recorded in non-volatile memory. In case of auxiliary supply interruption their status will be maintained.

Note: All function key DDB signals are always shown in the PSL Editor. However, the actual number of function keys depends on the device hardware. For example, if a small 20TE device has no function keys, the function key DDBs mapped in the PSL will not take effect.

11.5.1.1 Control Inputs

The control inputs are software switches, which can be set or reset locally or remotely. These inputs can be used to trigger any PSL function to which they are connected. There are three setting columns associated with the control inputs: **CONTROL INPUTS**, **CTRL I/P CONFIG** and **CTRL I/P LABELS**. These are listed in the Settings chapter.

APPLICATION NOTES

CONTENTS

1.	**INTRODUCTION**	**3**
1.1	**Protection of Substation Busbars**	**3**
2.	**APPLICATION OF INDIVIDUAL PROTECTION FUNCTIONS**	**4**
3.	**BUSBAR PROTECTION**	**5**
3.1	**87BB Phase CU Settings (Solid Earthed Network Schemes)**	**5**
3.1.1	Values Explained	6
3.2	**87BB CU Settings (Compensated Earthed Network Schemes)**	**8**
3.2.1	Values Explained	9
3.3	**87BB SDEF CU Settings (High Impedance Earthed Schemes only)**	**9**
4.	**ADDITIONAL PROTECTION**	**12**
4.1	**Dead Zone protection (DZ)**	**12**
4.2	**Overcurrent Protection (OC)**	**12**
4.3	**Earth Fault Protection (EF)**	**13**
4.4	**Stub Protection**	**13**
4.5	**CB Fail Timer**	**13**
4.5.1	External Fault Detection by High-Set Overcurrent or Earth Fault Element	14
4.6	**EIA(RS)232 InterMiCOM (“MODEM InterMiCOM”)**	**15**
5.	**CURRENT TRANSFORMERS**	**17**
5.1	**“Low voltage” Current Transformers Supervision**	**17**
5.2	**“High Voltage” Current Transformers Supervision**	**17**
6.	**CIRCUIT BREAKER FUNCTION**	**18**
6.1	**Circuit Breaker State Monitoring**	**18**
6.2	**Trip Relays**	**18**
7.	**TRIP CIRCUIT SUPERVISION**	**19**
7.1	**Trip Circuit Supervision Scheme 1**	**19**
7.1.1	Resistor Values	19
7.1.2	PSL for TCS Scheme 1	20
7.1.3	Trip Circuit Supervision Scheme 2	20
7.1.4	Resistor Values	21
7.1.5	PSL for TCS Scheme 2	21
7.1.6	Trip Circuit Supervision Scheme 3	21
7.1.7	Resistor Values	22
7.1.8	PSL for TCS Scheme 3	22
8.	**ISOLATION AND REDUCED FUNCTION MODE**	**23**
8.1	**Peripheral Units (P742 and P743)**	**23**
8.2	**Central Processing Unit (P741)**	**25**

8.3 System Operation Under Failed Communications Situation 26

8.4 Waiting Configuration 26

9. TOPOLOGY 27

9.1 CT in Zone Function 27

9.2 Topology Configuration Tool 27

9.3 Nodal Assignment 28

9.4 Topology Communication 29

9.5 Topology Data 29

9.6 Topology processing for various Bus Configurations 29

9.6.1 Single Bar or Double Bus with Bus Sectionalizer 30

9.6.2 Double Bus with One CT Bus Coupler 31

9.6.3 Double Bus with Two CT Bus Coupler 32

9.6.4 CTs on One Side of Bus Coupler, CB Closes before Status Acquisition 35

9.6.5 CTs on Both Sides of Bus Coupler, CB Closes before Status Acquisition 36

9.6.6 CTs on One Side of Bus coupler, CB Closed and Fault Evolves between CT and CB (even for switch onto fault) 37

9.6.7 CTs on Both Sides of Coupler, CB closed and Fault Evolves between CT and CB 38

10. UNDERTAKING A NUMERICAL DIFFERENTIAL BUSBAR PROTECTION PROJECT 40

10.1 Check List 40

10.2 General Substation Information 41

10.3 Short Circuit Levels 41

10.4 Switchgear 42

10.5 Cubicle Specifications 42

10.6 Substation Architecture 43

11. STANDARD CONFIGURATIONS 44

12. APPLICATION OF NON PROTECTION FUNCTIONS 55

12.1 Function Keys 55

13. CT REQUIREMENTS 56

13.1 Notation 56

13.2 87BB Phase CT Requirements 56

13.2.1 Feeders Connected to Sources of Significant Power (Lines and Generators) 56

13.2.2 Out of Service Feeders or those with Low Power Contribution (Low Infeed) 56

13.2.3 CT Specification according to IEC 185, 44-6 and BS 3938 (British Standard) 57

13.3 87BB Sensitive Differential Earth Fault CT Requirements 58

13.4 Support of IEEE C Class CTs 58

14. AUXILIARY SUPPLY FUSE RATING 60

1. INTRODUCTION

Before carrying out any work on the equipment, the user should be familiar with the contents of the safety section/safety guide Pxxx-SG-4LM-3 or later issue, the technical data section and the ratings on the equipment rating label.

1.1 Protection of Substation Busbars

The busbars in a substation are possibly one of the most critical elements in a power system. If a fault is not cleared or isolated quickly, not only could substantial damage to the busbars and primary plant result, but also a substantial loss of supply to all consumers who depend on the substation for their electricity. It is therefore essential that the protection associated with them provide reliable, fast and discriminative operation.

As with any power system, the continuity of supply is of the utmost importance, however, faults that occur on substation busbars are rarely transient but more usually of a permanent nature. Circuit breakers should, therefore, be tripped and not subject to any auto-reclosure.

The busbar protection must also remain stable for faults that occur outside of the protected zone as these faults will usually be cleared by external protection devices. In the case of a circuit breaker failure, it may be necessary to open all the adjacent circuit breakers, this can be achieved by issuing a backtrip to the busbar protection. Security and stability are key requirements of a busbar protection scheme. Should the busbar protection maloperate under such conditions substantial loss of supply could result unnecessarily.

Many different busbar configurations exist. A typical arrangement is a double busbar substation with a transfer bar. The positioning of the primary plant can also vary and needs to be considered, which in turn introduces endless variations, all of which must be able to be accommodated within the busbar protection scheme.

Backup protection is also an important feature of any protection scheme. In the event of equipment failure, such as signalling equipment or switchgear for example it is necessary to provide alternative forms of fault clearance. It is desirable to provide backup protection, which can operate with minimum time delay and yet discriminate with other protection elsewhere on the system.

2. APPLICATION OF INDIVIDUAL PROTECTION FUNCTIONS

The following sections detail individual protection functions in addition to where and how they may be applied. Each section provides some worked examples on how the settings are applied to the relay.

There are three modules that make up the P74x scheme:

- P741, which is the Central Unit (CU)
- P742 and P743 are both variants of the Peripheral Unit (PU)

The central unit co-ordinates the scheme, receiving signals from all the peripheral units associated with the protected busbar(s) and acting on these signals, initiating a bus zone protection trip when necessary.

One peripheral unit is associated with each CT location, usually one per incomer/feeder and one or two for each bus coupler/bus section depending on the number of CTs (1 or 2). The peripheral units acquire the analogue signals from the associated CT and the binary signals from the auxiliary contacts of the primary plant (CB and isolator(s)). The peripheral units also incorporate the main circuit breaker failure logic together with backup protection. The difference between the P742 and P743 is the amount of I/O, the number and type of LEDs and the function keys that each can accommodate. The P743 allows for increased I/O (useful in multiple bar applications or where single pole breakers and a transfer bar are employed), tricolour LEDs, function keys and Ethernet board slot.

The main features of the P74x scheme are summarized below:

- Current differential busbar protection - Phase segregated biased differential protection (sometimes referred to as low impedance type).
- Provides the main protection element for the scheme. This protection provides high-speed discriminative protection for all fault types.
- Sensitive differential earth fault protection - provided for high impedance earthed systems and incorporates bias current control to guarantee stability under external faults.
- Circuit breaker failure protection - two stage breaker fail logic that can be initiated internally or externally.
- Dead Zone protection - phase and neutral.
- Non-directional phase fault over current protection - provides two stage backup protection.
- Non-directional earth fault protection - provides two stage backup protection.
- Low Burden - Allows the protection to be installed in series with other equipment on a common CT secondary.
- Accommodates different CT classes, ratios and manufacturers.

3. BUSBAR PROTECTION

Busbar Biased Current Differential Protection

3.1 87BB Phase CU Settings (Solid Earthed Network Schemes)

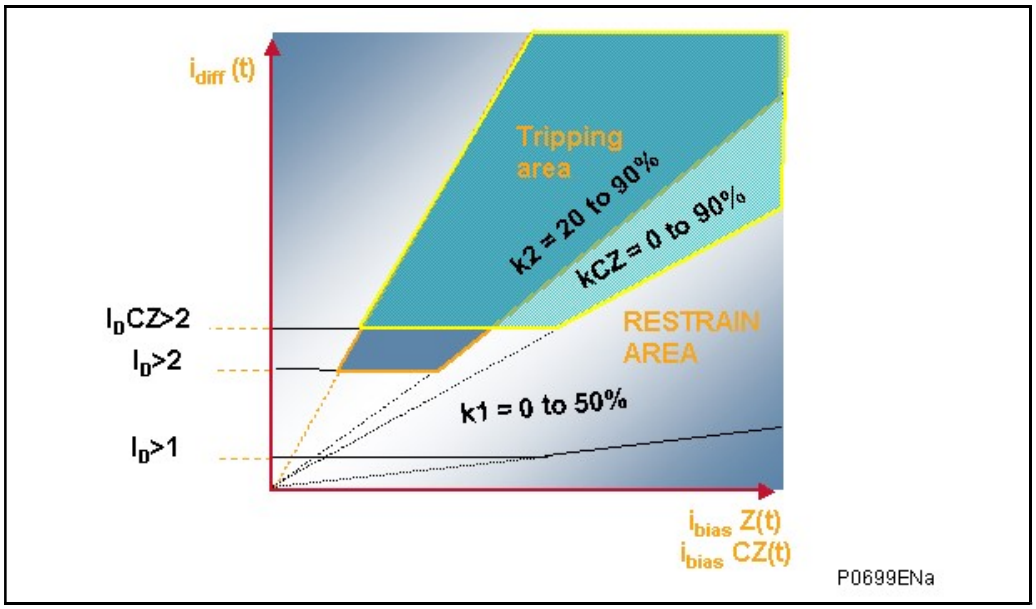

Figure 1: P74x Scheme Characteristic

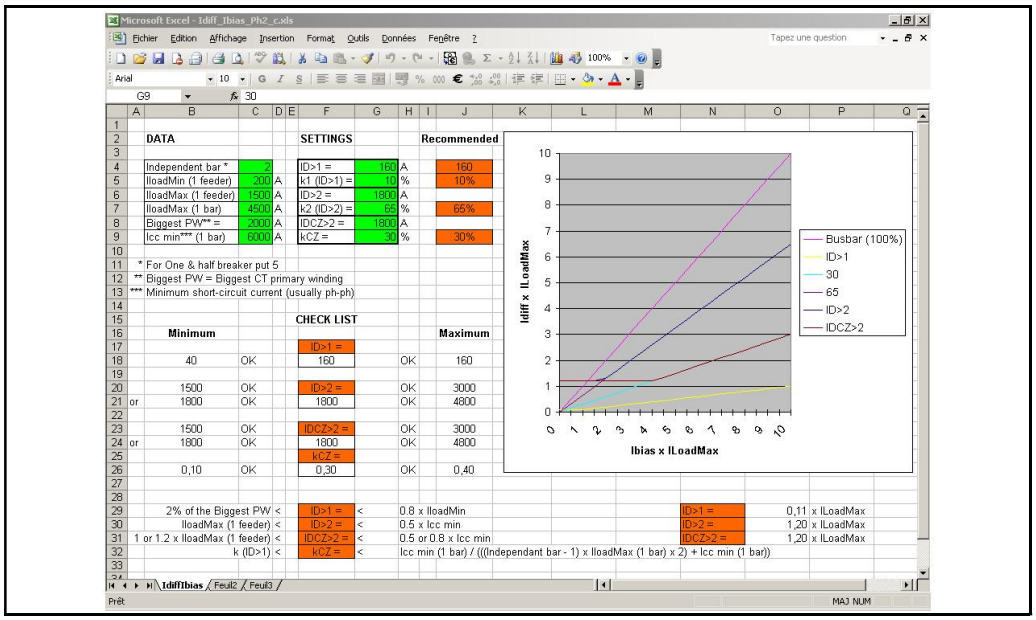

Figure 2: Idiff_Ibias Setting Calculations

An excel spreadsheet tool called “Idiff_Ibias“ is available on request to verify a reliable setting choice.

Open the spreadsheet and enter the following values:

1. Minimum load current in a feeder
2. Maximum load current in a feeder
3. Maximum load current in a bus
4. Biggest CT primary winding

5. Minimum short-circuit value (phase to phase) in a bus
6. Number of independent bars

You can now choose the following Differential Busbar Protection values:

1. ID>1 (from 5 A to 500 A (primary value)) as high as possible
2. Slope k1 (ID>1) (from 0% to 50%), recommendation is 10%
3. ID>2 (from 50 A to 50000 A (primary value)) as low as possible, whilst ensuring the single CT failure will not cause tripping under maximum load conditions
4. Slope k2 (ID>2) (from 20% to 90%), recommendation is generally 65%
5. IDCZ>2 (from 50 A to 50000 A (primary value)) as low as possible
6. Slope kCZ (IDCZ>2) (from 0% to 90%), recommendation is generally 30%
7. ID>1 Alarm Timer (from 0 to 100 s) shall be greater than the longest protection time (such as line, overcurrent, etc.)

3.1.1 Values Explained

- ID>1 should be higher than 2% of the biggest CT to not detect noise coming from it and less than 80% of the minimum load of a feeder to detect the minimum load imbalance in case of a problem in that feeder
- Slope k1 recommendation is 10% to meet 10Pxx current transformers
- ID>2 should be higher than 100% (and when possible 120% to allow 20% margin) of the biggest load to not maloperate in case of CT short-circuited or open circuit and less than 80% of the minimum fault current to operate sub-cycle for the minimum fault (and 50%, when possible, to be sure to always operate in 13ms)
- Slope k2 (ID>2)
  a) Recommendation is 65%

     To be always stable in the worth CT ratio conditions (between the biggest CT and the smallest CT). 60% is OK if the CT ratio is less than 5.

  b) Recommendation is 50% for China

     In China, the requirement is to be able to detect a resistive fault equal to 50% of the bias current.

     – IDCZ>2 same as ID>2

     – Slope kCZ (IDCZ>2)

  a) Recommendation is 30%

     The requirement is to be able to trip for a fault that is counted twice by the Check Zone (for example one and half circuit breaker substation) and depends on the number of bars:

     - n bars (Independent bars)
     - A minimum internal short-circuit value (Icc min (1 bar))
     - A maximum load for a bar (IloadMax (1 bar)).

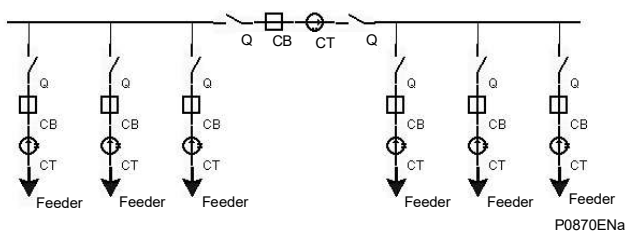

The worst case is:

- When all these buses are independent (bus sectionalizers open)
- The maximum load is on all the buses (biggest bias current)
- The internal short-circuit value is minimum.

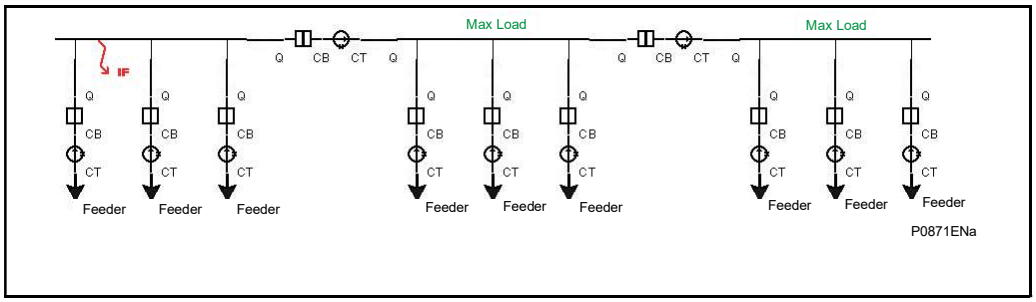

During the internal fault:

- The bias current is: Icc min (1 bar) + (n-1) x IloadMax (1 bar)
- The differential current is: Icc min (1 bar)

Therefore, the biggest slope for the Check Zone to detect the fault is:

$$\frac{\text{Icc min (1 bar)}}{\text{((Independent bars - 1) x IloadMax (1 bar)) + Icc min (1 bar)}}$$

If for example:

There are 3 buses and Icc min = IloadMax, the slope must be below 33%

For a one and half breaker scheme there are:

- 2 bars (Independent bars)
- A minimum internal short-circuit value (Icc min (1 bar))
- A maximum load for a bar (IloadMax (1 bar)).

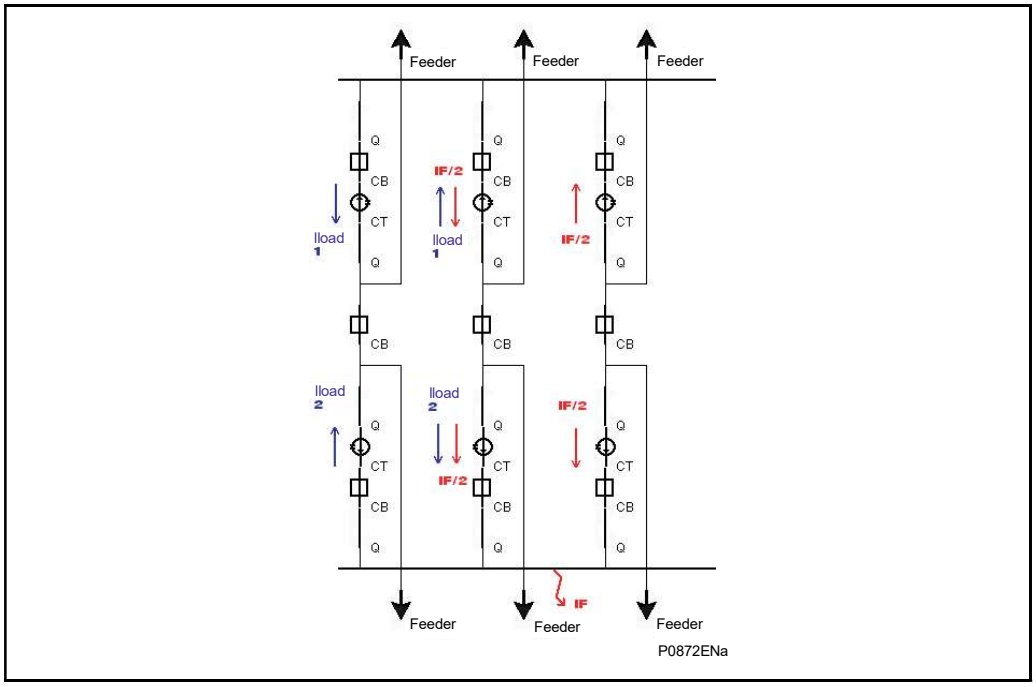

The worst case is:

- When the fault current is split in 2 and goes as well through the opposite bar
- The maximum load is on the 2 buses (biggest bias current)
- The internal short-circuit value is minimum

During the internal fault:

- The CZ bias current is: Icc min (1 bar) + 4 x IloadMax (1 bar)
- The CZ differential current is: Icc min (1 bar)

Therefore, the biggest slope for the Check Zone to detect the fault is:

$$\frac{\text{Icc min (1 bar)}}{\text{(4 x IloadMax (1 bar)) + Icc min (1 bar)}}$$

If for example:

Icc min = IloadMax, the slope must be below 20%

b) Recommendation is 25% for China

In china, the requirement is to be able to trip for a resistive fault that is counted twice by the Check Zone (for example one and half circuit breaker substation).

– ID>1 Alarm Timer to not operate for an external fault shall be greater than the longest protection time (such as line, overcurrent, etc…)

3.2 87BB CU Settings (Compensated Earthed Network Schemes)

An excel spreadsheet tool called “Idiff_Ibias“ is available on request to verify a reliable setting choice.

Enter the following values:

1. Maximum load current in a feeder
2. Minimum phase to phase fault current (Ph-Ph min.) in a bus
3. Maximum single phase steady state faulty current (Ph-N Max.) in a bus
4. Number of independent bars

You can now choose the following Differential Busbar Protection values:

1. ID>1 (from 5 A to 500 A (primary value)), recommendation equal to 1,2 x (Ph-N Max.)
2. Slope k1 (ID>1) (from 0% to 50%), recommendation is 10%.
3. ID>1 Alarm Timer (from 0 to 100 s) shall be greater than the longest Busbar protection time
4. Slope k2 (from 20% to 90%) but recommendation 65%.
5. ID>2 (from 50 A to 50000 A (primary value)), recommendation is:
6. Lower than 0,8 x (Ph-Ph min) and Higher than 1,2 x Iload Max and if possible equal to 6 x (ID>1).
7. Slope kCZ (from 0% to 90%) but recommendation 30%.
8. IDCZ>2 (from 50 A to 50000 A (primary value)), recommendation is:
9. Lower than 0,8 x (Ph-Ph min) and Higher than 1,2 x Iload Max and if possible equal to 6 x (ID>1).

3.2.1 Values Explained

1. ID>1 shall be higher than 120% of the highest phase to neutral fault to not operate in case of phase to neutral fault.
2. Slope k1 recommendation is 10% to meet 10Pxx current transformers
3. ID>1 Alarm Timer to not operate for an external fault shall be greater than the longest protection time (such as line, overcurrent, etc…)
4. Slope k2 (ID>2) recommendation is 65%

To be always stable in the worth CT ratio conditions (between the biggest CT and the smallest CT). 60% is OK if the CT ratio is less than 5.

1. ID>2 shall be lower than 80% of the minimum phase to phase fault current to operate sub-cycle for the minimum fault and higher than 120% Iload Max (120% to allow 20% margin) and if possible equal to 6 x (ID>1) to be insensitive to the worth CT saturation.
2. IDCZ>2 same as ID>2
3. Slope kCZ (IDCZ>2) recommendation is 30%

The requirement is to be able to trip for a fault that is counted twice by the Check Zone (for example one and half circuit breaker substation)

3.3 87BB SDEF CU Settings (High Impedance Earthed Schemes only)

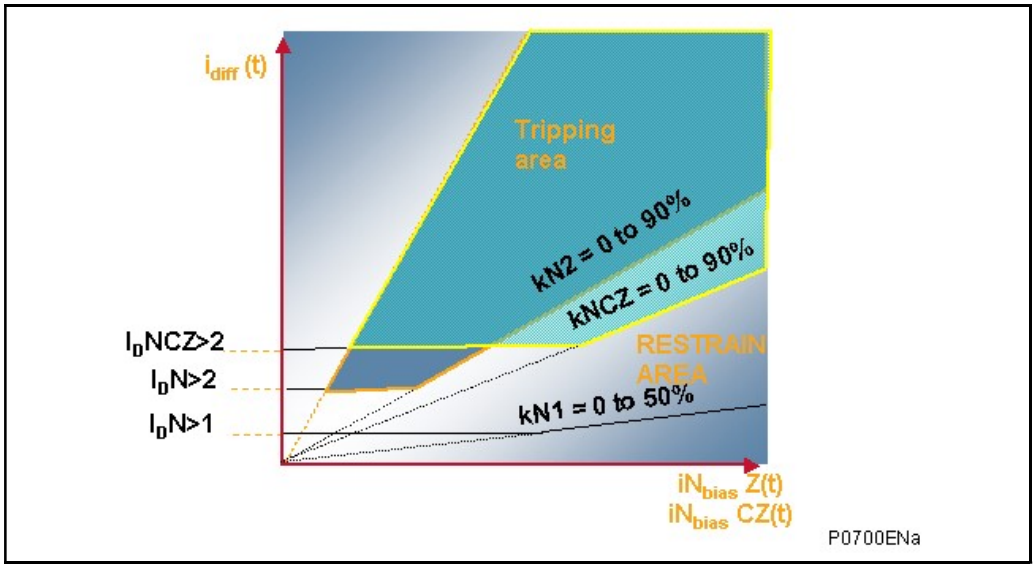

Figure 3: Sensitive Earth Fault Characteristic

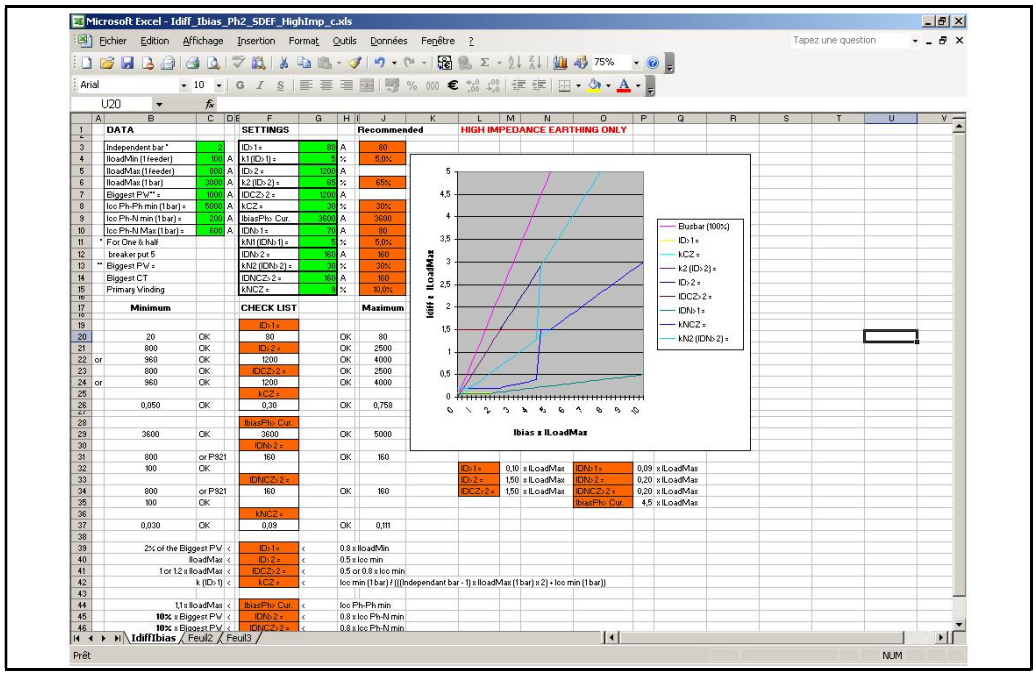

Figure 4: Idiff_Ibias_SDEF_HighImp Setting Calculations

An excel spreadsheet tool called Idiff_Ibias_SDEF_HighImp" is available on request to verify a reliable setting choice.

Open the spreadsheet and enter the following values:

1. Number of independent bus
2. Minimum load current in a feeder
3. Maximum load current in a feeder
4. Maximum load current in a bus
5. Biggest CT primary winding
6. Minimum phase to phase short-circuit value in a bus
7. Minimum phase to ground short-circuit value in a bus
8. Maximum phase to ground short-circuit value in a bus

You can now enter the following SDEF Busbar Protection values:

1. ID>1 (from 5 A to 500 A (primary value)) as high as possible
2. Slope k1 (ID>1) (from 0% to 50%), recommendation is 5%.
3. ID>2 (from 50 A to 50000 A (primary value))
4. Slope k2 (ID>2) (from 20% to 90%), recommendation is 65%.
5. IDCZ>2 (from 50 A to 50000 A (primary value)) as low as possible
6. Slope kCZ (IDCZ>2) (from 0% to 90%), recommendation is 30%.
7. ID>1 Alarm Timer (from 0 to 100 s) shall be greater than the longest protection time (such as line, overcurrent, etc…)
8. Current IbiasPh> Cur. (from 50 A to 50000 A (primary value)) as low as possible
9. IDN>1 (from 5 A to 500 A (primary value)), recommendation is equal to ID>1
10. Slope kN1 (IDN>1) (from 0% to 50%), recommendation is 5%.
11. IDN>2 (from 50 A to 50000 A (primary value)) as high as possible

12. Slope kN2 (IDN>2) (from 0% to 50%), recommendation is over 30%.
13. IDNCZ>2 (from 50 A to 50000 A (primary value)) as high as possible
14. Slope kNCZ (IDNCZ>2) (from 0% to 50%), recommendation is 10%.
15. IDN>1 Alarm Timer (from 0 to 100 s) recommendation = ID>1 Alarm Timer

4. ADDITIONAL PROTECTION

4.1 Dead Zone protection (DZ)

On a feeder, if the isolators or the breaker is open, a dead zone (or end zone) is said to exist between the open element and the CT. The P74x peripheral units can protect this zone with the Dead Zone protection. This is a simple time delayed overcurrent and earth fault element which is only active when a dead zone is identified in the local topology.

Setting Guidelines

The trip order must be mapped in the PSL to an output relay to send an intertrip to the other end of the line if the breaker is on the busbar side.

It is advised to also map it to the breaker relay trip contacts.

The busbar diff will trip if the nominal bias current is less than:

$$\text{IDZ fault} \times \frac{1 - K2\%}{K2\%}$$

i.e. K2% = 65%, IDZfault x 0.538.

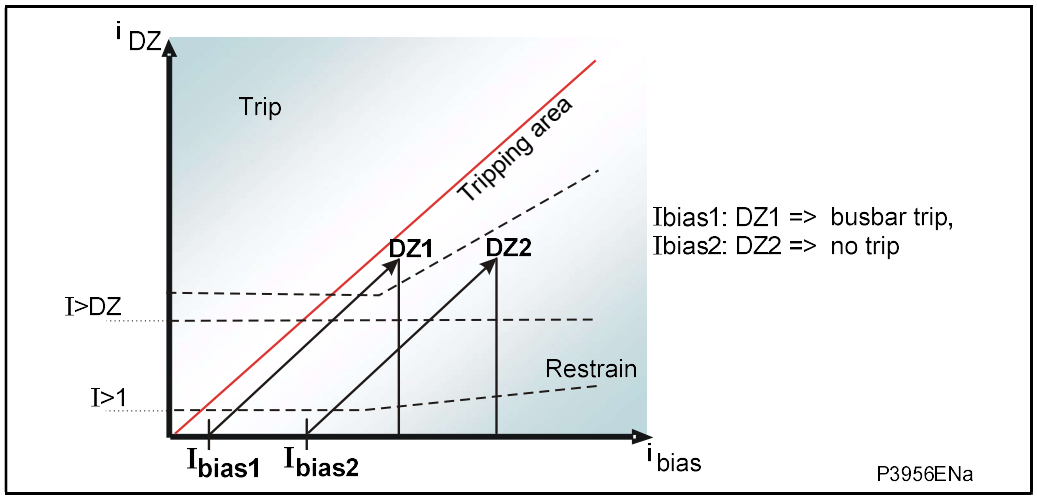

Figure 5:

For each PU connected to a Feeder Circuit Breaker (not on bus couplers or bus sections)

For the phase:

- I>DZ must be below 80% of the minimum Dead Zone fault level (and if possible bigger than the maximum load).
- I>DZ Time delay must be at least 50ms if the CB status positions are used (any value otherwise).

For the Neutral (if used):

- IN>DZ must be below 80% of the minimum Dead Zone earth fault.
- IN>DZ Time delay must be at least 50ms if the CB status positions are used (any value otherwise).

4.2 Overcurrent Protection (OC)

Two stages of overcurrent protection are available in each Peripheral Unit.

The first stage I>1 is either DT or IDMT, the second I>2 stage is DT only.

Both can be individually blocked using ddb signal in the PSL:

- Block phase overcurrent stage 1-time delay (I>1 Timer Block)
- Block phase overcurrent stage 2-time delay (I>2 Timer Block)

4.3 Earth Fault Protection (EF)

Two stages of neutral overcurrent (Earth Fault protection) are available in each Peripheral Unit.

The first stage IN>1 is either DT or IDMT, the second stage IN>2 is DT only.

Both can be individually blocked using ddb signal in the PSL:

- Block earth fault stage 1-time delay (IN>1 Timer Block)
- Block earth fault stage 2-time delay (IN>2 Timer Block)

4.4 Stub Protection

When a one and half breaker scheme is protected by a P74x, the stub protection can be done using a simple time delayed overcurrent element in each PU.

The activation of this protection must be set in the PSL and activated when all the associated isolators are open.

In the main setting group (usually 1), there is no overcurrent protection, in the next setting group (usually 2) this overcurrent is enabled (on top of the same setting as in the main setting group).

The setting group will be changed from “main” to “next” in the PSL.

Setting Guidelines

For each PU:

- I>1 must be below 80% of the minimum Stub fault level (and if possible bigger than the maximum load).
- The time delay can be of any value.

4.5 CB Fail Timer

Setting Guidelines

The following examples consider direct tripping of a 2-cycle circuit breaker. Typical timer settings to use are as follows:

CB Fail Reset Mechanism	tBF Time Delay	Typical Delay for 2 Cycle Circuit Breaker
CB open	CB auxiliary contacts opening/ closing time (max.) + error in tBF timer + safety margin	50 + 10 + 50 = 110 ms
Undercurrent elements	CB interrupting time + undercurrent element (max.) + safety margin operating time	50 + 15 + 20 = 85 ms

Note: Where auxiliary tripping relays are used, an additional 10-15ms must be added to allow for trip relay operation.

The phase undercurrent settings (I<) must be set less than load current, to ensure that I< operation indicates that the circuit breaker pole is open. A typical setting for overhead line or cable circuits is 20% In, with 5% In common for generator circuit breaker CBF.

4.5.1 External Fault Detection by High-Set Overcurrent or Earth Fault Element

There are feeders where the short-circuit power is sufficiently low in relation to that of the busbar or external faults that the CT would saturate for an external fault within 2ms. These feeders are mainly transformer feeders where the short circuit reactance poses significant limitations, or weak outfeeders. Therefore, knowing the feeder's maximum possible contribution to the busbar fault current, it is easy to infer that exceeding this value will indicate an external fault. In these cases, it is just the presence of a high current that will indicate an external fault.

In this case, CT saturation could occur very quickly. The P74x scheme may detect a fault, but a saturation condition is immediately detected and inhibits tripping.

An ultra high-speed detection is carried out by each of the peripheral units (P742 and P743) and can generate a blocking signal from the moment of the first sample at 0.42 ms.

In this scenario de-saturation may not occur until after the scheme has eliminated the saturation condition for the external fault.

This function can be activated independently for phase faults (I>2) and for earth faults (I_N>2).

4.5.1.1 Application Example

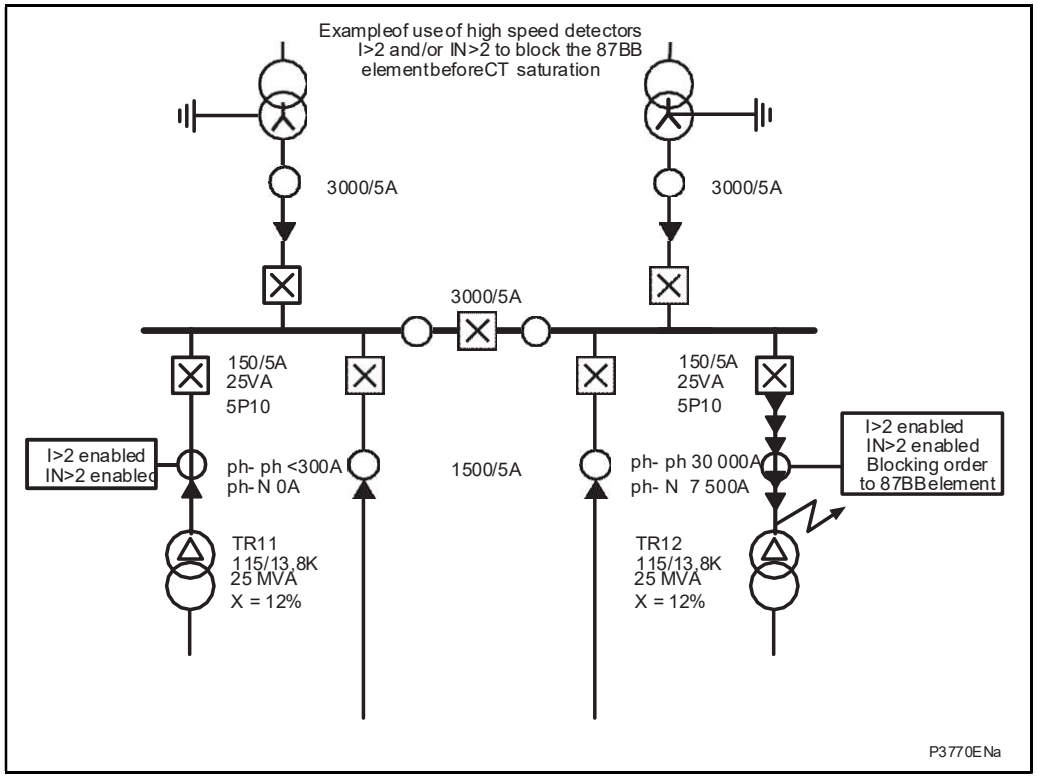

Figure 6: Transformer Feeder Example

An example of where this facility is required and where there is a high risk of CT saturation is shown in the figure above.

The problem lies in the transformer feeder circuits TR11 and TR12 both 25 MVA 115/13.8kV rated and with a reactance of 12%. Both feeders are equipped with 150/5 A CTs. (If the rating is 25 MVA I=125A @115 kV). Maximum busbar short circuit current is 30kA phase to phase and 7.5kA phase to earth.

The contribution of each transformer feeder under internal fault conditions is as follows:

1. Maximum of 1045A i.e. full load current x 1/X%, assuming infinite 13.8kV bar (which is unrealistic).

2. 0 A for phase to earth faults.

When an external fault occurs on one of these transformer feeders, the fault MVA will be the same as that for an internal fault, but the feeder will be subjected to an excessively high overcurrent condition as compared to normal load conditions at rated current.

Under the external fault condition, the short-circuit phase to phase current is 200 times the primary rated current. Taking into account the CT and initial flux estimated at 80% of that at full load, saturation will be detected at 10 times In, where In is the CT nominal current - in this case in primary values (150 A x 10 = 1500 A).

With $I_{saturation}$ = 1500 A and $I_{short\text{-}circuit}$ = 30000 A = 20 x $I_{saturation}$.

If the assumption is taken that there is no remnant flux, saturation will be detected 1.4 ms after the appearance of the fault at which time the current will have reached 0.4 times the maximum value i.e. 1200 A.

Therefore, an ultra fast Overcurrent detector in the P742 and P743 when used on HV/MV transformer feeders makes it possible to pre-empt CT saturation and establish an external fault condition. The setting used for this detection is I>2 for phase faults and IN>2 for earth faults.

In this example a setting of 1305 A can be used for both phase and earth faults.

Setting Guidelines

An excel spreadsheet tool called “FastExtThreshold” is available on request.

This feature must be used when secondary maximum current is over 50A (IN = 1A) or 250A (IN=5A) or the CT does not meet the CT requirements and if the maximum feeder contribution is far less than the maximum external fault.

For each PU connected to a Circuit Breaker

Note: I>2 is the recommended value.

Open the spreadsheet and enter the following values:

1. Maximum feeder load
2. Feeder contribution to internal fault

You can now enter the following CT values:

1. Phase CT Primary current given by the manufacturer
2. Phase CT secondary current (1 or 5 A) given by the manufacturer
3. CT secondary resistance given by the manufacturer
4. Secondary burdens to be measured
5. Knee point Voltage (or Rated Burden and KSCC) given by the manufacturer

4.6 EIA(RS)232 InterMiCOM (“MODEM InterMiCOM”)

Application Notes

Electrical InterMiCOM settings are contained within two columns: **INTERMICOM COMMS** and **INTERMICOM CONF**. The INTERMICOM COMMS column contains all the settings needed to configure the communications, as well as the channel statistics and diagnostic facilities. The **INTERMICOM CONF** column sets the mode of each command signal and defines how they operate in case of signalling failure.

Short metallic direct connections and connections using fire-optic converters will generally be set to have the highest signalling speed of 19200b/s. Due to this high signalling rate, the difference in operating time between the direct, permissive, and blocking type signals is small. This means you can select the most secure signaling command type (Direct’ intertrip) for all commands. You do this with the **IM# Cmd Type** settings. For these applications you should set the **IM# Fallback Mode** to **Default**. You should also set a minimal intentional delay by setting **IM# FrameSyncTim** to 10 msecs. This ensures that whenever two

consecutive corrupt messages are received, the command will immediately revert to the default value until a new valid message is received.

For applications that use Modem and/or multiplexed connections, the trade-off between speed, security, and dependability is more critical. Choosing the fastest baud rate (data rate) to achieve maximum speed may appear attractive, but this is likely to increase the cost of the telecommunications equipment. Also, telecommunication services operating at high data rates are more prone to interference and suffer from longer re-synchronization times following periods of disruption. Considering these factors, we recommend a maximum baud rate setting of 9600 bps. As baud rates decrease, communications become more robust with fewer interruptions, but overall signalling times increase.

At slower baud rates, the choice of signalling mode becomes significant. You should also consider what happens during periods of noise when message structure and content can be lost.

- In 'Blocking' mode, the likelihood of receiving a command in a noisy environment is high. In this case, we recommend you set **IM# Fallback Mode** to **Default**, with a reasonably long **IM# FrameSyncTim** setting.
  Set **IM# DefaultValue** to '1'. This provides a substitute for a received blocking signal, applying a failsafe for blocking schemes.
- In 'Direct' mode, the likelihood of receiving commands in a noisy environment is small. In this case, we recommend you set **IM# Fallback Mode** to **Default** with a short IM# **FrameSyncTim** setting. Set **IM# DefaultValue** to '0'. This means that if a corrupt message is received, InterMiCOM will use the default value.
- This provides a substitute for the intertrip signal not being received, applying a failsafe for direct intertripping schemes.
- In 'Permissive' mode, the likelihood of receiving a valid command under noisy communications conditions is somewhere between that of the 'Blocking' mode and the 'Direct' intertrip mode. In this case, we recommended you set **IM# Fallback Mode** to **Latched**.

The table below presents recommended **IM# FrameSyncTim** settings for the different signalling modes and baud rates:

Baud Rate	Minimum Recommended "IM# FrameSyncTim" Setting			
	Direct Intertrip Mode	Blocking Mode	Minimum Setting (ms)	Maximum Setting (ms)
600	100	250	100	1500
1200	50	130	50	1500
2400	30	70	30	1500
4800	20	40	20	1500
9600	10	20	10	1500
19200	10	10	10	1500

Note: As we have recommended Latched operation, the table does not contain recommendations for 'Permissive' mode. However, if you do select 'Default' mode, you should set **IM# FrameSyncTim** greater than those listed above. If you set **IM# FrameSyncTim** lower than the minimum setting listed above, the device could interpret a valid change in a message as a corrupted message.

Note: We recommend a setting of 25% for the communications failure alarm.

5. CURRENT TRANSFORMERS

It is important that the CT settings are entered in full as these are required to calculate additional parameters for use in the saturation detection algorithms that run within the peripheral units.

A P74x scheme can accommodate different CT ratios throughout the protected zone, the maximum ratio between the smallest primary CT winding and the biggest primary CT winding is 40. This mix must, therefore, be accounted for by the scheme and it is achieved by using the primary currents sent by the Peripheral Units to the Central Unit which undertakes the scheme calculations.

For P741 a common virtual current transformer of 1000/1 A is used to convert to secondary values.

5.1 “Low voltage” Current Transformers Supervision

The “Low voltage” CTs in the PU are supervised by the 3I0 supervision algorithm.

If the difference between 3I0 and the measured In is higher than set, after a set timer, the **PU CT Fail IN** alarm appears in the PU.

This supervision does impact the 87BB protection.

5.2 “High Voltage” Current Transformers Supervision

The “High voltage” CTs are supervised by the CT supervision algorithm:
If there is at least 10% of In current in the CT, the difference between the magnitude of the current measured by 2 phases should not exceed 50%.

If that happens, after a set timer, the “CT Fail” alarm appears in the PU and in the dynamic synoptic (if connected).

This supervision does not impact directly the 87BB protection, there is no blocking request sent to the CU.

6. CIRCUIT BREAKER FUNCTION

6.1 Circuit Breaker State Monitoring

An operator at a remote location requires a reliable indication of the state of the switchgear. Without an indication that each circuit breaker is either open or closed, the operator has insufficient information to decide on switching operations. The relay incorporates circuit breaker state monitoring, giving an indication of the position of the circuit breaker, or, if the state is unknown, an alarm is raised.

6.2 Trip Relays

Relays contacts 1, 2, and 3 on every PU are used for tripping signals from busbar protection, overcurrent protection and back-trip breaker failure. Even if these relay contacts 1, 2, and 3 are not used in the PSL, they are closed if there is a trip command from these functions listed above. However, these relays can be affected in the PSL for additional functions (breaker-failure retrip for example).

The dwell time of these three contacts is controlled by the [**CB CONTROL**, **Prot Trip Pulse**] setting and ensures that a minimum tripping duration is always applied.

7. TRIP CIRCUIT SUPERVISION

In most protection schemes, the trip circuit extends beyond the IED enclosure and passes through components such as links, relay contacts, auxiliary switches and other terminal boards. Such complex arrangements may require dedicated schemes for their supervision.

There are two distinctly separate parts to the trip circuit: the trip path, and the trip coil. The trip path is the path between the IED enclosure and the CB cubicle. This path contains ancillary components such as cables, fuses and connectors. A break in this path is possible, so it is desirable to supervise this trip path and to raise an alarm if a break should appear in this path.

The trip coil itself is also part of the overall trip circuit, and it is also possible for the trip coil to develop an open circuit fault.

This product supports a number of trip circuit supervision (TCS) schemes.

7.1 Trip Circuit Supervision Scheme 1

This scheme provides supervision of the trip coil with the CB open or closed, however, it does not provide supervision of the trip path whilst the breaker is open. The CB status can be monitored when a self-reset trip contact is used. However, this scheme is incompatible with latched trip contacts, as a latched contact will short out the opto-input for a time exceeding the recommended Delayed Drop-off (DDO) timer setting of 400 ms, and therefore does not support CB status monitoring. If you require CB status monitoring, further opto-inputs must be used.

Note: A 52a CB auxiliary contact follows the CB position. A 52b auxiliary contact is the opposite.

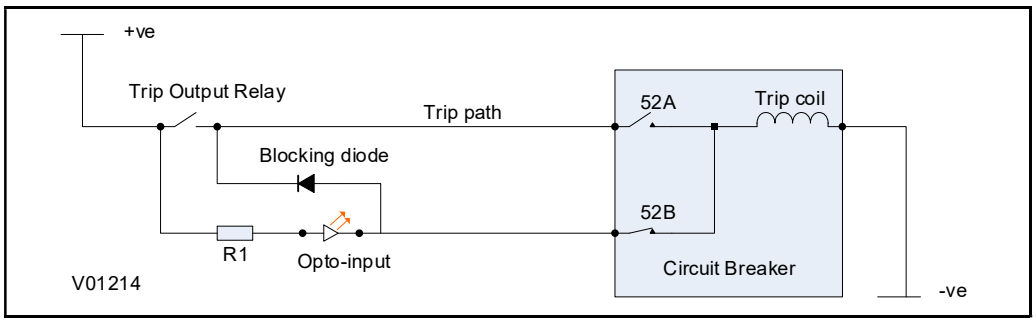

Figure 7: TCS Scheme 1

When the CB is closed, supervision current passes through the opto-input, blocking diode and trip coil. When the CB is open, supervision current flows through the opto-input and into the trip coil via the 52b auxiliary contact. This means that Trip Coil supervision is provided when the CB is either closed or open, however Trip Path supervision is only provided when the CB is closed. No supervision of the trip path is provided whilst the CB is open (pre-closing supervision). Any fault in the trip path will only be detected on CB closing, after a 400 ms delay.

7.1.1 Resistor Values

The supervision current is a lot less than the current required by the trip coil to trip a CB. The opto-input limits this supervision current to less than 10 mA. If the opto-input were to be short-circuited however, it could be possible for the supervision current to reach a level that could trip the CB. For this reason, a resistor R1 is often used to limit the current in the event of a short-circuited opto-input. This limits the current to less than 60mA. The table below shows the appropriate resistor value and voltage setting for this scheme.

Trip Circuit Voltage	Opto Voltage Setting with R1 Fitted	Resistor R1 (Ohms)
48/54	24/27	1.2k
110/250	48/54	2.5k
220/250	110/125	5.0k

This Scheme is not compatible with Trip Circuit voltages of less than 48 V.

7.1.2 PSL for TCS Scheme 1

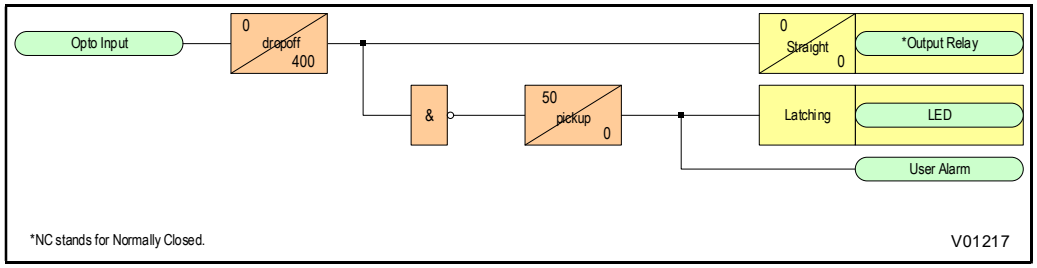

Figure 8: PSL for TCS Scheme 1

The opto-input can be used to drive a Normally Closed Output Relay, which in turn can be used to drive alarm equipment. The signal can also be inverted to drive a latching programmable LED and a user alarm DDB signal.

The DDO timer operates as soon as the opto-input is energised but will take 400 ms to drop off/reset in the event of a trip circuit failure. The 400 ms delay prevents a false alarm due to voltage dips caused by faults in other circuits or during normal tripping operation when the opto-input is shorted by a self-reset trip contact. When the timer is operated the NC (normally closed) output relay opens and the LED and user alarms are reset.

The 50 ms delay on pick-up timer prevents false LED and user alarm indications during the power up time, following a voltage supply interruption.

7.1.3 Trip Circuit Supervision Scheme 2

This scheme provides supervision of the trip coil with the breaker open or closed but does not provide pre-closing supervision of the trip path. However, using two opto-inputs allows the IED to correctly monitor the circuit breaker status since they are connected in series with the CB auxiliary contacts. This is achieved by assigning one opto input to the 52a contact and another opto-input to the 52b contact. Provided the CB Status setting in the **CB CONTROL** column is set to Both 52A and 52B, the IED will correctly monitor the status of the breaker. This scheme is also fully compatible with latched contacts as the supervision current will be maintained through the 52b contact when the trip contact is closed.

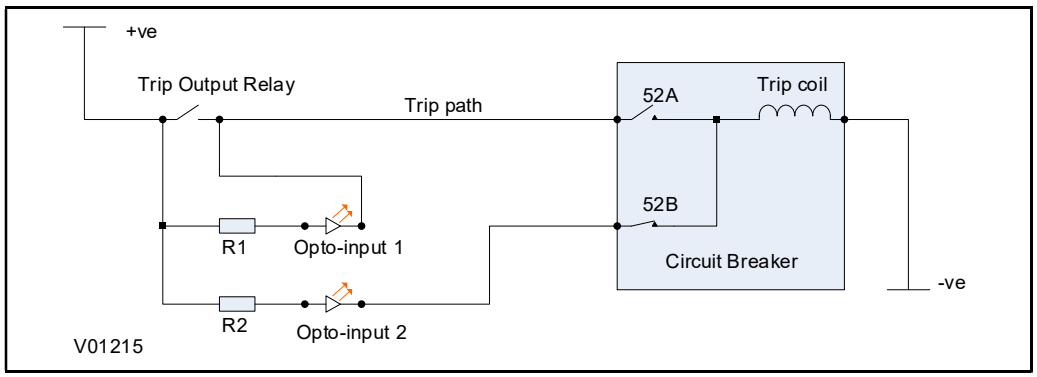

Figure 9: TCS Scheme 2

When the breaker is closed, supervision current passes through opto input 1 and the trip coil. When the breaker is open current flows through opto input 2 and the trip coil. No supervision of the trip path is provided whilst the breaker is open. Any fault in the trip path will only be detected on CB closing, after a 400 ms delay.

7.1.4 Resistor Values

Optional resistors R1 and R2 can be added to prevent tripping of the CB if either opto-input is shorted. The table below shows the appropriate resistor value and voltage setting for this scheme.

Trip Circuit Voltage	Opto Voltage Setting with R1 Fitted	Resistor R1 and R2 (Ohms)
48/54	24/27	1.2k
110/250	48/54	2.5k
220/250	110/125	5.0k

This Scheme is not compatible with Trip Circuit voltages of less than 48 V.

7.1.5 PSL for TCS Scheme 2

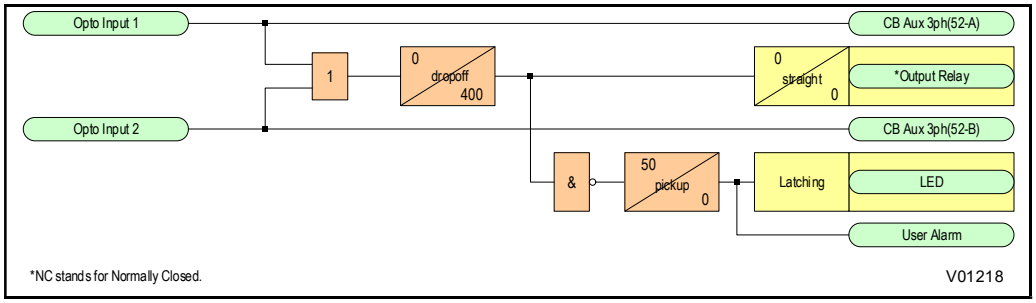

Figure 10: PSL for TCS Scheme 2

In TCS scheme 2, both opto-inputs must be low before a trip circuit fail alarm is given.

7.1.6 Trip Circuit Supervision Scheme 3

TCS Scheme 3 is designed to provide supervision of the trip coil with the breaker open or closed. It provides preclosing supervision of the trip path. Since only one opto-input is used, this scheme is not compatible with latched trip contacts. If you require CB status monitoring, further opto-inputs must be used.

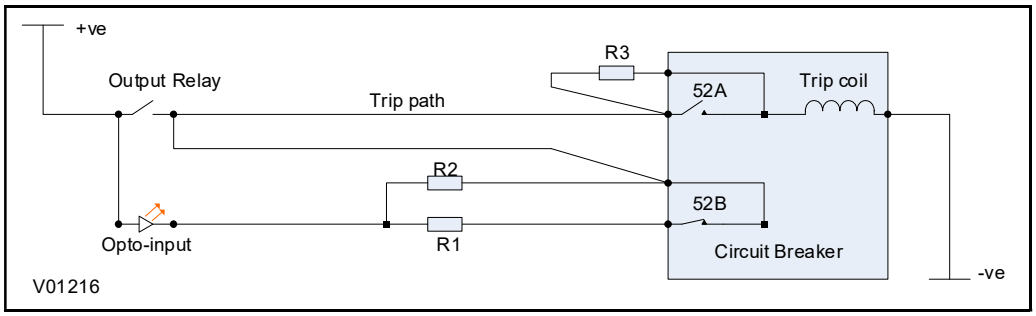

Figure 11: TCS Scheme 3

When the CB is closed, supervision current passes through the opto-input, resistor R2 and the trip coil. When the CB is open, current flows through the opto-input, resistors R1 and R2 (in parallel), resistor R3 and the trip coil. The supervision current is maintained through the trip path with the breaker in either state, therefore providing preclosing supervision.

7.1.7 Resistor Values

Resistors R1 and R2 are used to prevent false tripping, if the opto-input is accidentally shorted. However, unlike the other two schemes. This scheme is dependent upon the position and value of these resistors. Removing them would result in incomplete trip circuit monitoring. The table below shows the resistor values and voltage settings required for satisfactory operation.

Trip Circuit Voltage	Opto Voltage Setting with R1 Fitted	Resistor R1 and R2 (Ohms)	Resistor R3 (Ohms)
48/54	24/27	1.2k	600
110/250	48/54	2.5k	1.2k
220/250	110/125	5.0k	2.5k

This Scheme is not compatible with Trip Circuit voltages of less than 48 V.

7.1.8 PSL for TCS Scheme 3

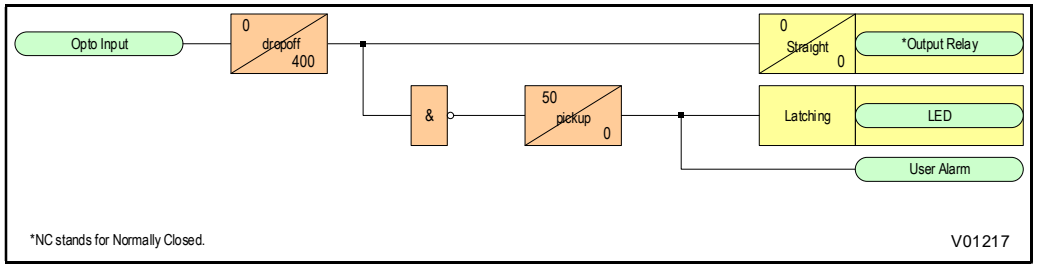

Figure 12: PSL for TCS Scheme 3

8. ISOLATION AND REDUCED FUNCTION MODE

The scheme permits maintenance on the busbar and, or busbar protection whilst maintaining some form of protection if possible. Two maintenance mode levels in the Central Unit and two maintenance mode levels in the Peripheral Units allow this to be possible. A command to one or more of the affected units will then force the scheme to a selected (reduced) operating mode. The levels are as follow.

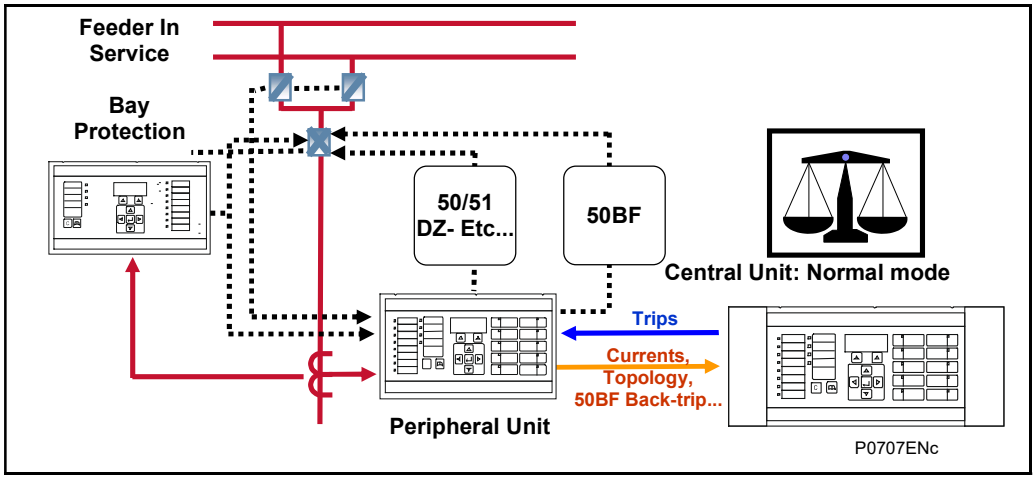

Figure 13: Normal Mode

8.1 Peripheral Units (P742 and P743)

Two levels of command can be applied selectively to each peripheral unit.

CB Failure Protection (50BF) Disabled

In this mode, all tripping information from external relay are not taken into account. The topology algorithm forwards the feeder positions to the central unit as normal. As the peripheral unit continues to monitor the analogue values the central unit will maintain a balanced condition with the remainder of the system still in normal operation. However, the CB failure backtrip information will not be sent to the Central Unit. The local protections (Dead Zone, Overcurrent, Earth Fault) are still enabled, and the PU can retrip the breaker. However, the Peripheral Unit can react to a fault condition by creating a CB fail condition and back tripping the zone(s) if the CU sends a trip order (87BB or 50BF backtrip), to clear a genuine fault).

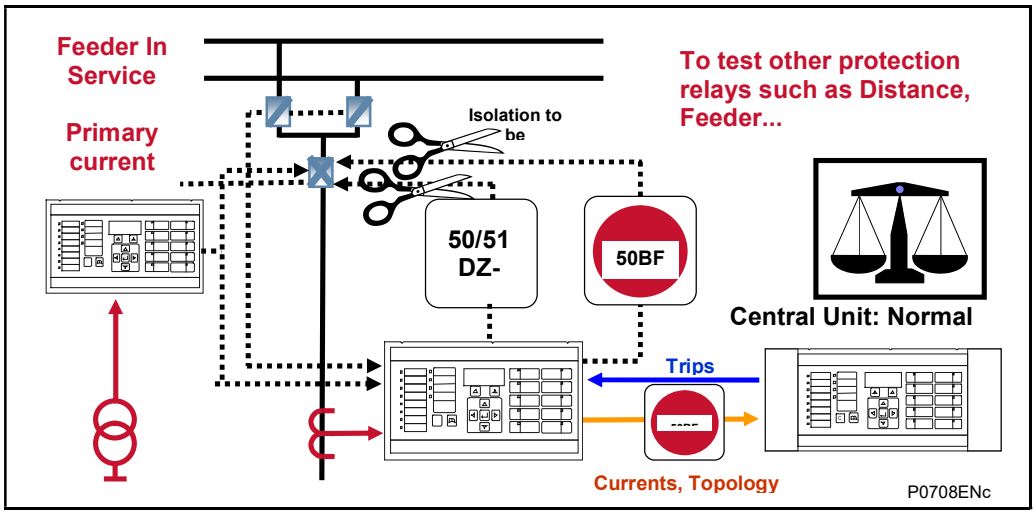

Figure 14: PU - 50BF Disabled

Overhaul

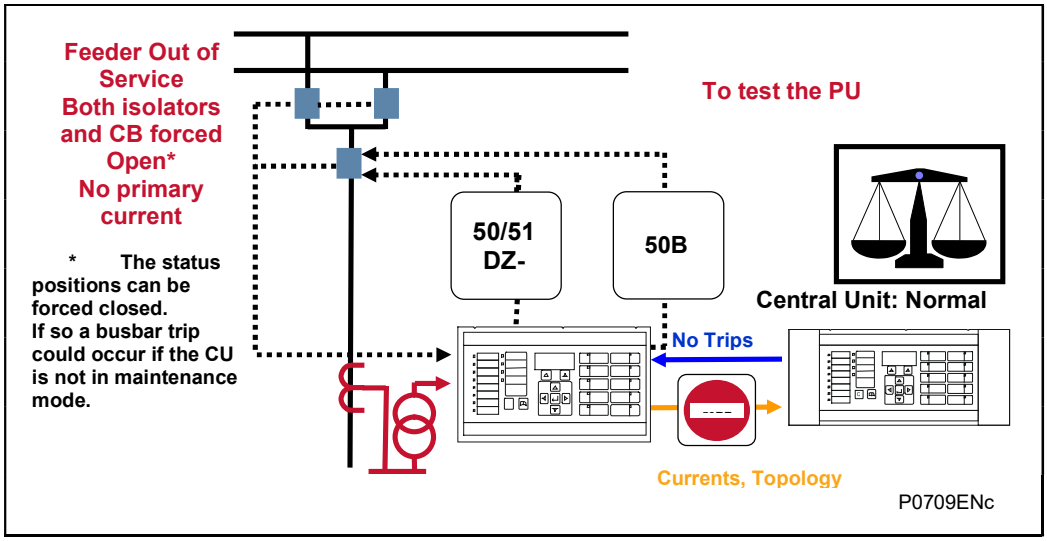

Figure 15: PU - Overhaul

In this mode the feeder is totally disconnected from the system because all the isolators/CBs are open, but all information is passed back to the central unit for inclusion in zone calculations and hence the protection scheme. Hence the central unit can keep the zone elements in service as the contribution of this feeder will be zero. (The CT is still used by the Check Zone element)

Whilst in this mode the peripheral unit can be tested locally for example secondary injections tests can be carried out.(The system is stable because during the current injection there is a differential current in the CZ but not in the Zone)

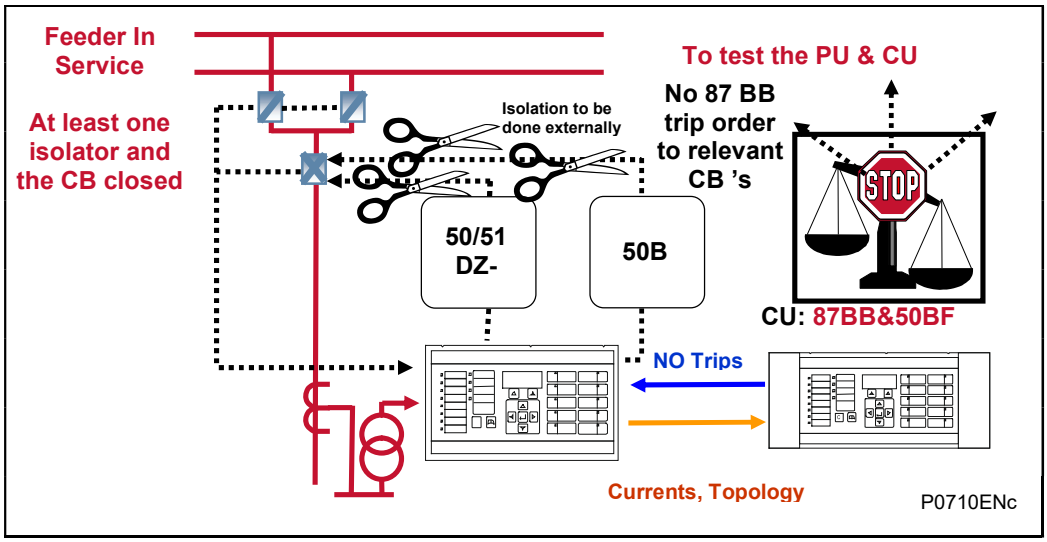

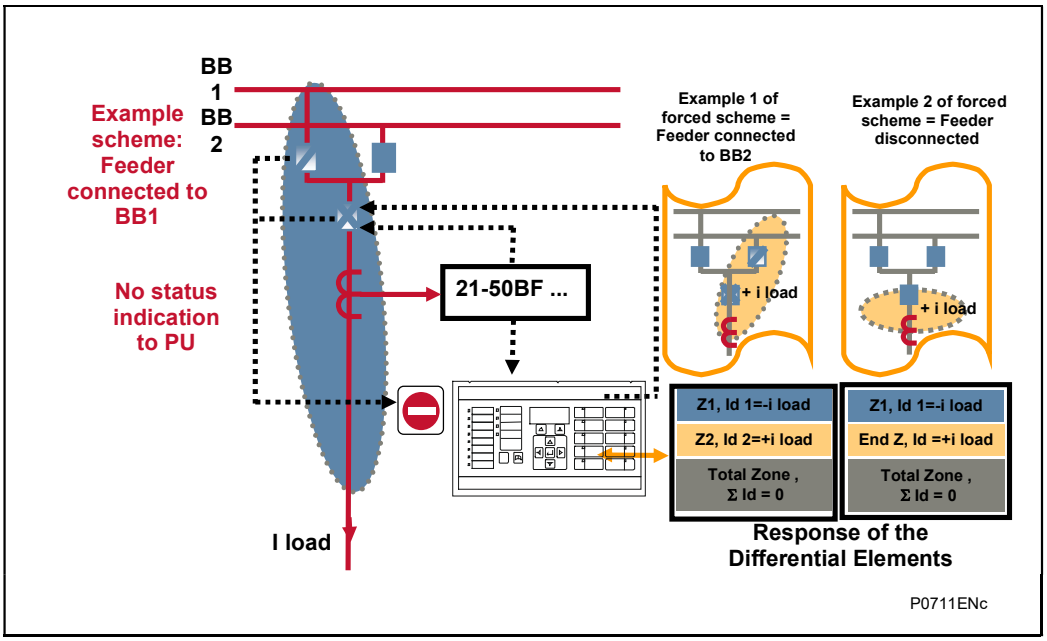

Figure 16: Forcing Plant Position State

Under certain conditions it may be desirable to force the positions of the primary plant to enable scheme testing to be carried out, for example during commissioning.

In the first example the forced scheme theoretically connects the feeder to busbar 2, whilst in practice it is connected to busbar 1. Zone 1 will see a differential current equal to $-i_{load}$ whilst zone 2 will see a differential current equal to $+i_{load}$ this will give a check zone equal to zero.

In the second example the forced scheme theoretically totally disconnects the feeder. An end zone or extra node is created by the topology to fully replicate the scheme. This lies between the feeder CT and the circuit breaker.

However, it must be remembered that in practice the feeder is still connected to busbar 1. Zone 1 will see a differential current equal to $-i_{load}$. This extra node will see a differential current equal to $+i_{load}$ and which when included in the check zone will give a result equal to zero.

If done, to avoid any maloperation, the Central Unit must be in 87BB blocking mode while performing these forcings.

8.2 Central Processing Unit (P741)

A central instruction for a reduced operation mode of the busbar protection on two levels can be applied selectively zone by zone.

- Busbar protection (87BB) Blocked

The busbar protection is monitored only (not protected by 87BB) (i.e. all BB protection trips are inhibited, and measurements are enabled). All other protection remains in service and trips can still be issued for genuine CBF conditions.

- 87BB Blocked & 50BF disabled

In this mode, both the busbar and circuit breaker fail conditions are monitored but all trips are inhibited.

Additionally, all protection functions are disabled when the system is awaiting configuration downloads (topology is missing).

8.3 System Operation Under Failed Communications Situation

With each start or reboot of the CU, all the zones are set to 87BB and 50BF disabled mode as described above. They will remain in this mode until all peripheral units are recognized as being in service and synchronized. (**PU CONF & STATUS**/**PU in service**).

If a PU that was considered to be out of service but suddenly communicates with the CU, the CU automatically places all zones to a waiting system configuration mode while waiting for an input from the user to either assign the PU in service or disconnect additional PUs.

During operation, if communication with a PU is broken during a very short time, the zone connected to the CT of the non-communicating PU is temporarily suspended. If communication is restored, the differential protection is restored for the zone. On the other hand, if the break in communications persists longer than permitted as given by the PU Error Timer, the zone protection is suspended.

If the PU error self-reset mode is disabled, for the reinstatement of the zone the user must intervene:

- If communication is restored the user must reset the alarm by the same command to reset PU Error (**PU CONF & STATUS** -> **Reset PU Error**)

If the PU error self-reset mode is enabled, the reinstatement of the zone will be automatically done after the set timer delay.

On the PU, an alarm will indicate loss of communication with the CU.

On the CU, an alarm will indicate that one or more PUs are no longer synchronized.

In the **PU CONF & STATUS** column, it is possible to view the list of synchronized PU (PU connected) after having altered the list of PU in service (PU in service).

If at the time of the initial start-up, the topology of the substation was implemented including futures (for example, 15 PU including 6 extensions) it is possible to boot the system by only activating the existing 9 PUs in the cell PU in service. When the futures 6 PUs are connected, it will be sufficient to connect them and indicate that they are now in service in the CU menu columns.

Note: 'loss of communication with the CU' alarm can be disabled by disable the event filter bit (PSL_DDB_ELEMENT_252 - bit 28 of DBM_PARAMETERS). This means when the event filter bit is disabled, the alarm will be disabled as well.

8.4 Waiting Configuration

Alarm “Config error” occurs when the configuration is incorrect:

- Topology download in relay does not correspond to this relay address (be careful to erase topology by sending a default setting file)
- For CU: check the coherency of threshold:

  [IDCZ>2] > [ID>1] and [ID>2] > [ID>1] and [IDNCZ>2] > [IDN>1] and [IDN>2] > [IDN>1]

9. TOPOLOGY

The topological analysis of the state of the substation in real time is one of the primary factors of the reliability of numerical differential busbar protection. Thus, in the case of a power system fault, this analysis determines the sections of the substation concerned with the fault and only takes those sections out of service. The algorithms available for topological analysis make this level of discrimination possible and it is these algorithms that are utilized in the P74x scheme.

9.1 CT in Zone Function

The relay can be set to consider only the isolator status to determine the boundary of a zone, or to consider both the isolator and the circuit breaker status. This is achieved by the **CT in Zone Func** setting. If both the isolator and circuit breaker status are used (**CT in Zone Func** is set to Circuit Breaker + Isolators), the CB close pulse signal input generated externally to the relay (eg. via SCADA, or manual control) should be mapped to DDB#120 **Man. CB Close Cmd**.

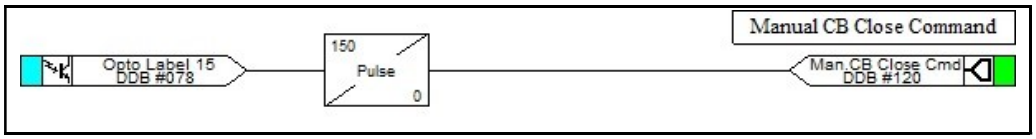

9.2 Topology Configuration Tool

For the P74x scheme the system topology is determined by replication of the circuit, i.e. the connections between the various pieces of plant on the system, via a graphical interface. This topological replication is carried out from a single line diagram of the system, which is used to recreate the system using the topology configuration software. This is carried out by GE Vernova personnel at an authorized GE Vernova competence centre or by the customer for extensions after having successfully completed the dedicated training.

In that case, we'll be very pleased to provide the installation code that is required to install the P74x configuration tools (during installation, it will be required to enter this code).

It should be considered that use of the P74x Scheme Editor and Synoptic without appropriate training and careful consideration can be extremely hazardous. To remind you of this, every time the tools are launched a warning message will be displayed:

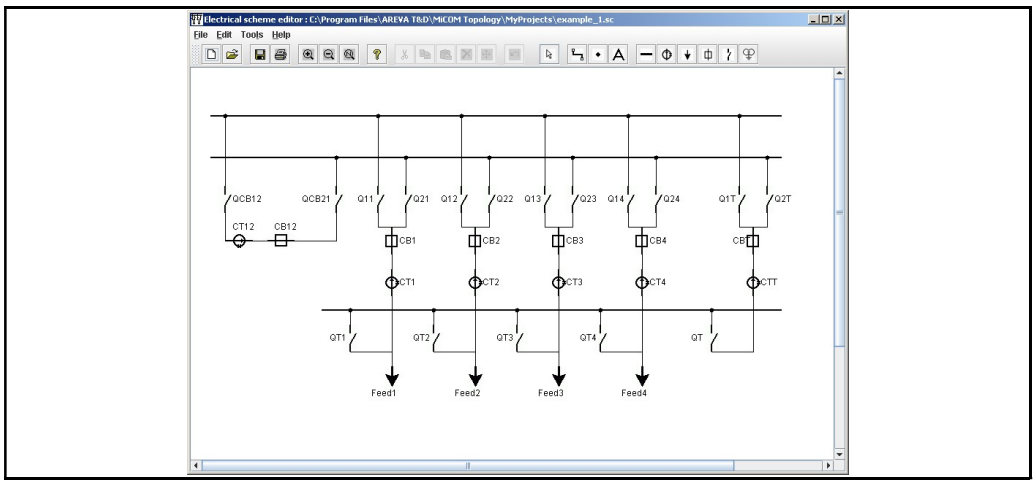

Figure 17: P74x Scheme Editor

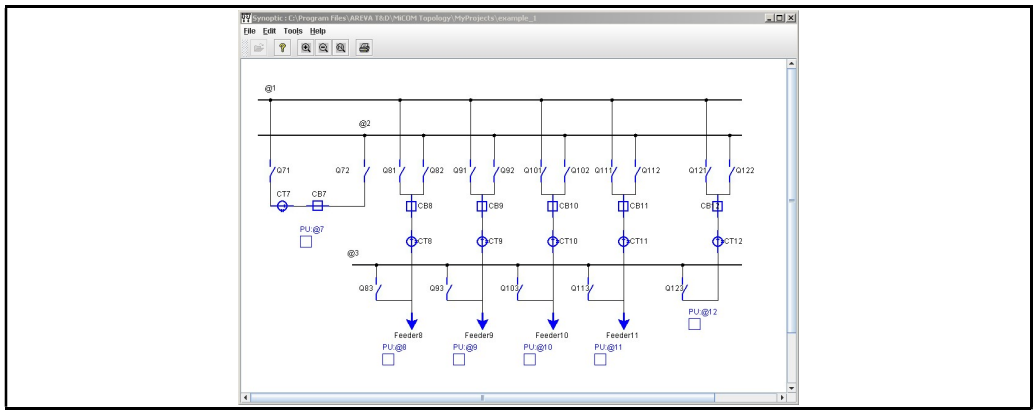

Figure 18: P74x Synoptic

The topology configuration tool uses standard symbols for creating the system model by simply dragging and dropping in the configuration screen.

	Bar		Link
	Node		
	Current Transformer		Feeder
	Circuit Breaker (CB)		Isolator

The switchgear/busbars are then labelled and assigned to relevant peripheral units.

When the topology has been fully defined it is compiled and then downloaded to each PU and the CU.

9.3 Nodal Assignment

Four files are created from the topological model. The first identifies each piece of primary plant such as circuit breakers, isolators, current transformer (CT), bus section and feeders. The second file identifies the connections between each piece of primary plant and the third calculates the topological nodal assignment thus making it possible to link to each peripheral unit with associated primary plant of the system. The fourth file will be used by the Dynamic Synoptic software to visualize the substation in real time.

Algorithms search to determine the electrical topology. These operate in real time in the P74x scheme. They start with the information obtained regarding the state of the primary plant. A state table is created and associated with each device. According to the algorithm, this state table gathers data related to the physical states of the primary plant taken by the unit.

The results of these algorithms are then subjects of a further algorithm, developed from operational research. This algorithm identifies commonality between nodes and merges nodes where appropriate. The new node includes all common nodes.

The principal characteristics of this algorithm mean that the scheme has the following benefits:

- Adaptability to various substation configurations
- Permanent identification of current nodes
- Permanent identification of physical links for each zone
- Reference to the neighbouring circuit breakers for each point of the circuit
- These algorithms offer flexibility to the operator not met in non-numeric conventional systems
- The global substation topology is updated every 16ms

The above improves the overall function and discrimination of the protection scheme and therefore reliability of the network.

9.4 Topology Communication

The peripheral units relay the information regarding their associated topological model to the central unit. The central unit gathers information from all attached peripheral units and calculates the topological scheme for these as well as carrying out the calculations for the system topology.

9.5 Topology Data

Topology results are displayed in Central Unit and locally in Peripheral Units and can be visualised in real time using the Dynamic Synoptic software.

For the Central Unit, zones included in each current node are displayed in Topology 1 column and current transformer (or Peripheral Unit) included in each current node are displayed in Topology 2 column.

2 bars with 1 CT coupling example:

Node 1 = Zone 1; Node 2 = Zone 2

If the two zones are shunt by a feeder switch:

Node 1 = Zone 1 and Zone 2; Node 2 is then removed

2 bars with 2 CT coupling example:

Node 1 = Zone 1; Node 2 = Zone 2

A Node 3 is created when the coupling breaker is closed.

For the Peripheral Unit, the link between current transformer and zones are displayed in the Topology column.

2 bars with 1 CT coupling example:

- The feeder PUs connected to Zone 1 are connected to Node 1
- The feeder PUs connected to Zone 2 are connected to Node 2 (if existing)
- The coupling PU is connected to both nodes when the breaker is closed and to none when the breaker is open

2 bars with 2 CT coupling example:

- The feeder PUs connected to Zone 1 are connected to Node 1
- The feeder PUs connected to Zone 2 are connected to Node 2 (if existing)
- The coupling PUs are connected to Node 3 and the appropriate node when the breaker is closed and to none when the breaker is open

The bias and differential currents for the connected zone are displayed.

Note: If the topology scheme is equipped with a transfer bus outside the protection zone, this link is never reported in Topology column because the current transformer is connected to the feeder.

9.6 Topology processing for various Bus Configurations

The following scenarios demonstrate how the dynamic topology processing works and accommodates anomalies and discrepancies in the scheme.

9.6.1 Single Bar or Double Bus with Bus Sectionalizer

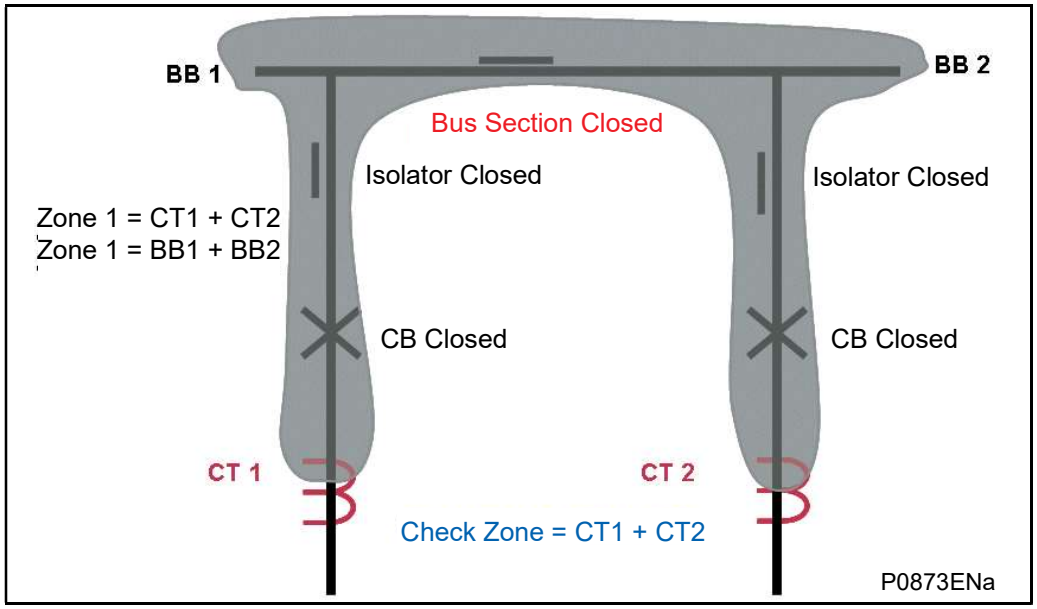

Figure 19: Bus Section Closed

A zone is defined as a CT to another CT or an open electrical element (coupler/feeder CB or isolator).

As all the breakers and isolators are closed there is only one zone including BB1 and BB2.

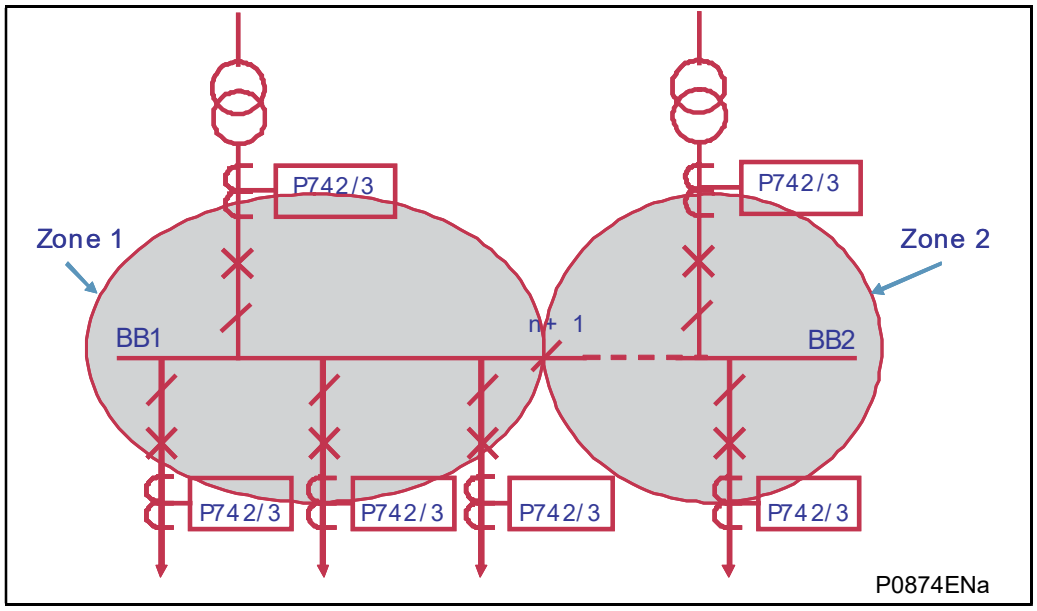

Figure 20: Bus Section Open

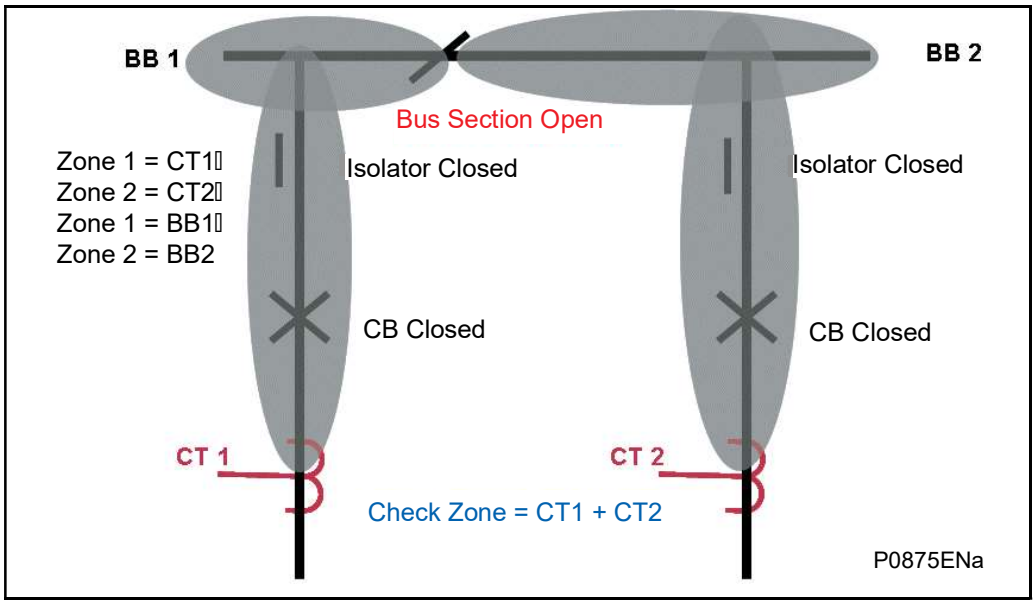

Figure 21: Bus Section Open

A zone is defined as a CT to another CT or an open electrical element (coupler/feeder CB or isolator).

When the bus section is open, a zone is created from each bar feeder CT to that open bus section.

There is one zone for BB1 and one zone for BB2.

9.6.2 Double Bus with One CT Bus Coupler

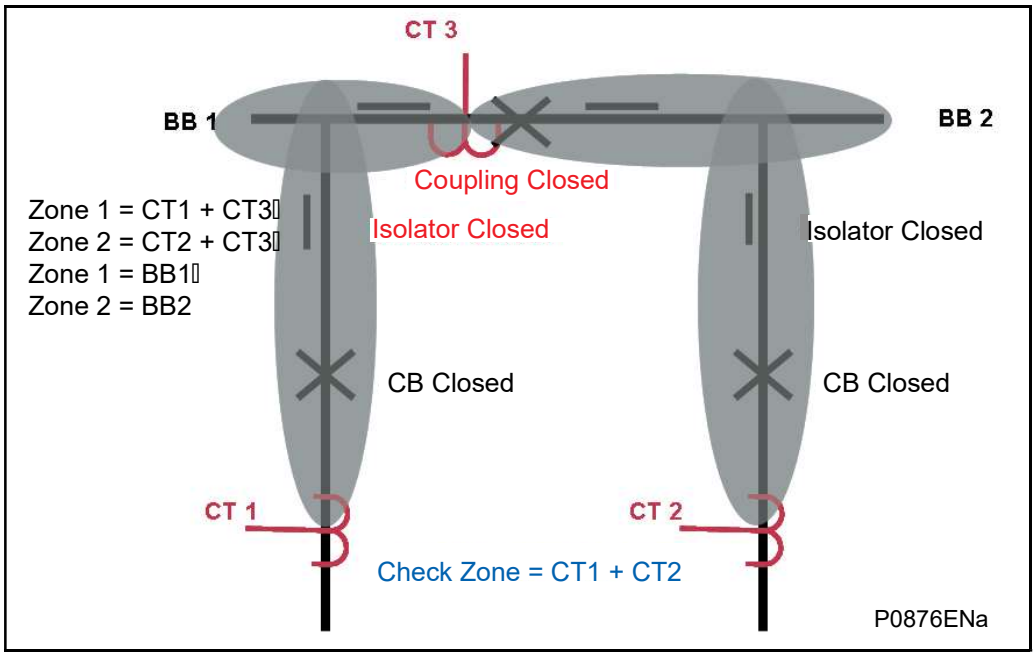

Figure 22: Bus Coupler Closed

A zone is defined as a CT to another CT or an open electrical element (coupler/feeder CB or isolator).

When one CT is used in the coupling and the coupler CB is closed, a zone is created from each bar feeder CT to that coupler CT.

There is one zone for BB1 to CT3 and one zone for BB2 to CT3.

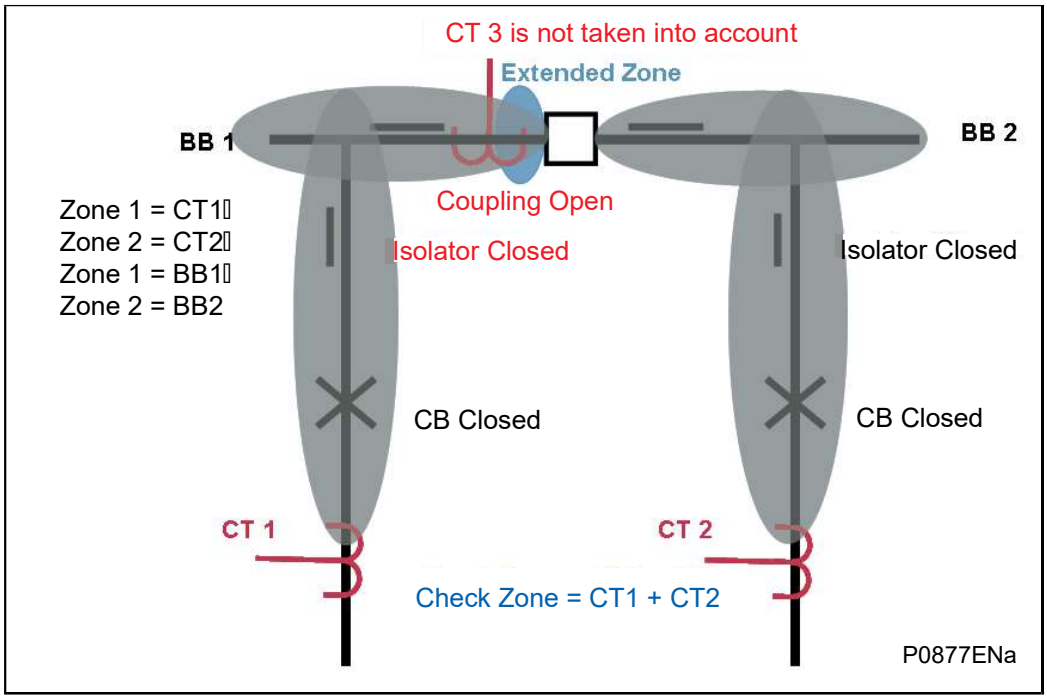

Figure 23: Bus Coupler Open

A zone is defined as a CT to another CT or an open electrical element (coupler/feeder CB or isolator).

When one CT is used in the coupling and the coupler CB is open, the coupler CT measurement is not taken into account, and a zone is created from each bar feeder CT to that open coupler CB.

There is one zone for BB1 and one zone for BB2.

9.6.3 Double Bus with Two CT Bus Coupler

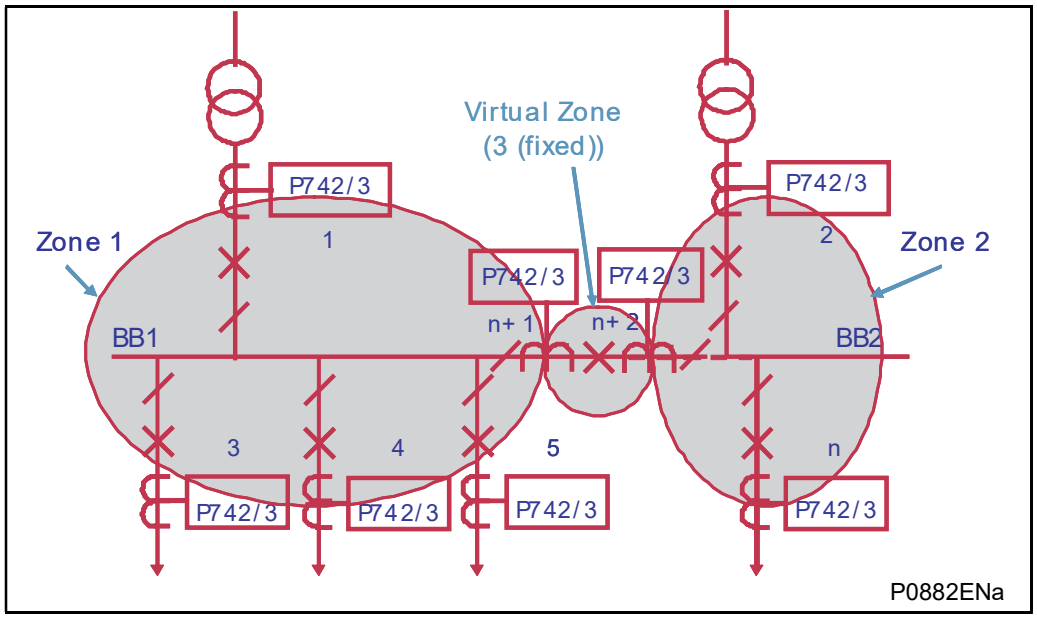

Figure 24: Bus Coupler Closed

A zone is defined as a CT to another CT or an open electrical element (coupler/feeder CB or isolator).

When 2 CTs are used in the coupling and the coupler CB is closed, a virtual zone is created from each bar feeder CT to the linked coupler CT.

The zone between the 2 coupler CTs belongs to that virtual zone which is behaving as the overlap of the 2 connected zones.

There is one zone for BB1 to CT3, one zone for BB2 to CT4 and one virtual zone from CT3 to CT4.

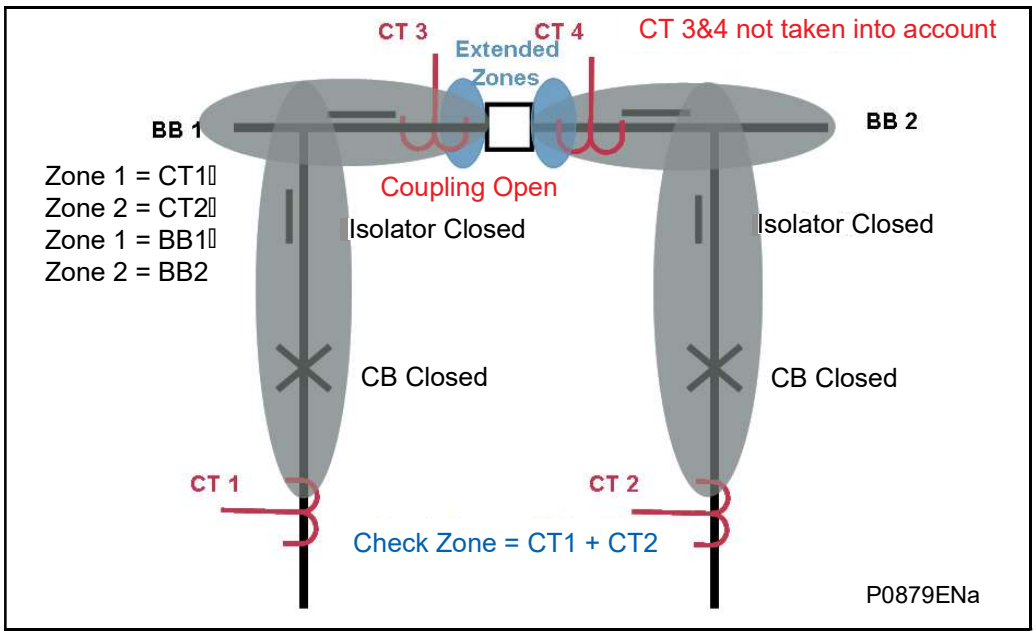

Figure 25: Bus Coupler Open

A zone is defined from a CT to another CT or an open electrical element (coupler/feeder CB or isolator).

When 2 CTs are used in the coupling and the coupler CB is open, the coupler CTs measurements are not taken into account, and the zones are extended is created from each bar feeder CT to that open coupler CB.

There is one zone for BB1 and one zone for BB2.

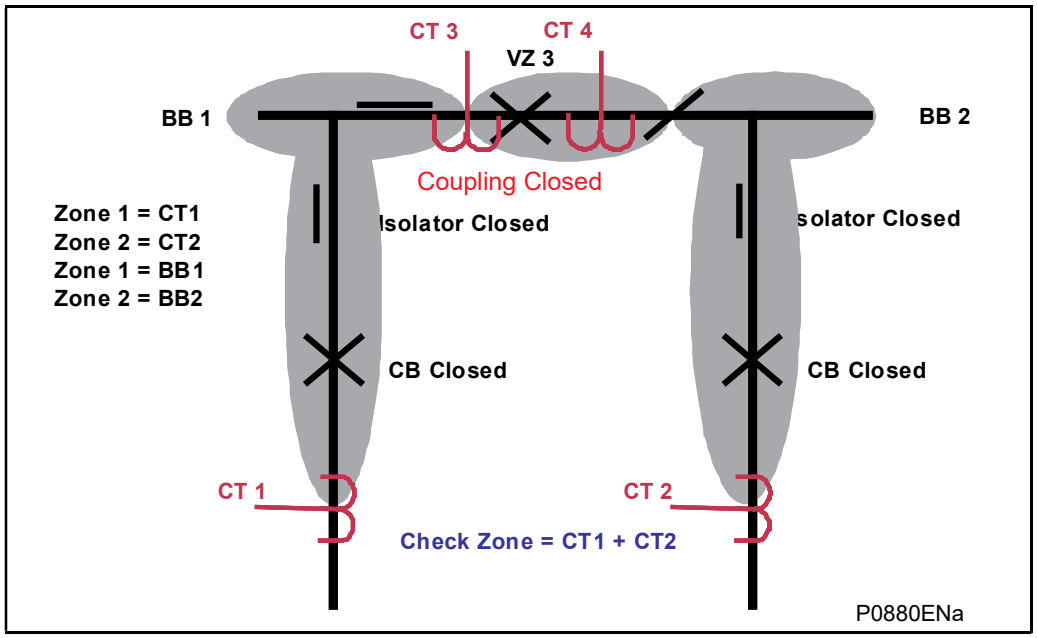

Figure 26: Bus Coupler Closed and One Isolator Open

A zone is defined as a CT to another CT or an open electrical element (coupler/feeder CB or isolator).

When 2 CTs are used in the coupling and the coupler CB is closed but a coupler isolator is open, the coupler CT (linked to that open isolator) measurement is not taken into account, and the virtual zone is extended from the coupler CT to that open coupler isolator.

There is one zone for BB1 to the coupler CT, one zone for BB2 to the open isolator and one virtual zone from the coupler CT to the open isolator.

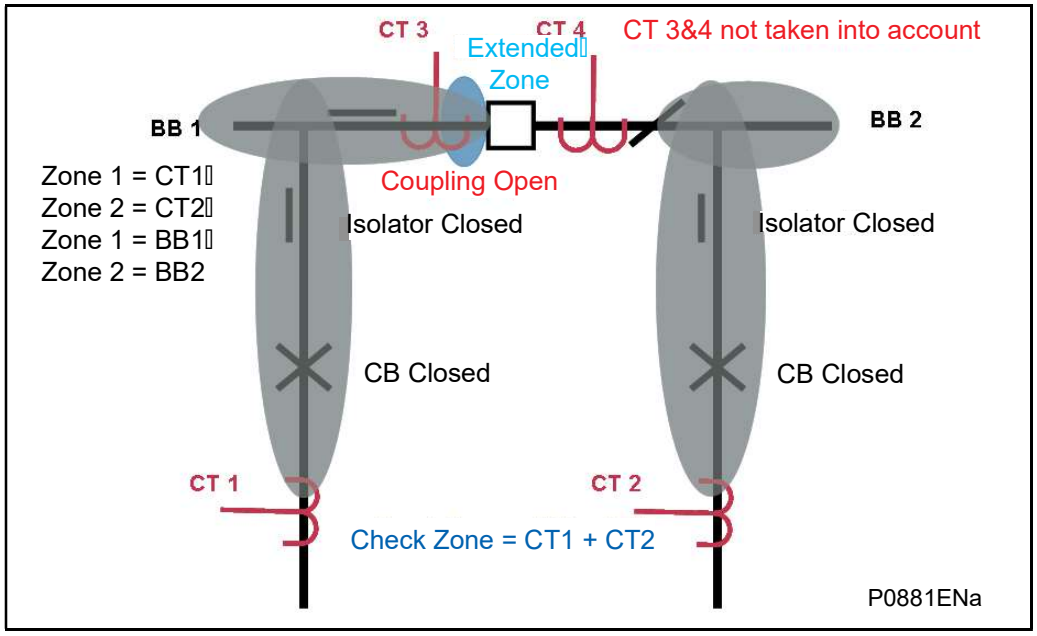

Figure 27: Bus Coupler and One Isolator Open

A zone is defined from a CT to another CT or an open electrical element (coupler/feeder CB or isolator).

When 2 CTs are used in the coupling and the coupler CB is open and a coupler isolator is open, the coupler CTs measurements are not taken into account, and the zone is extended from each bar feeder CT to the open CB coupler and to the open coupler isolator.

There is one zone for BB1 to the open breaker and one zone for BB2 to the open isolator.

9.6.4 CTs on One Side of Bus Coupler, CB Closes before Status Acquisition

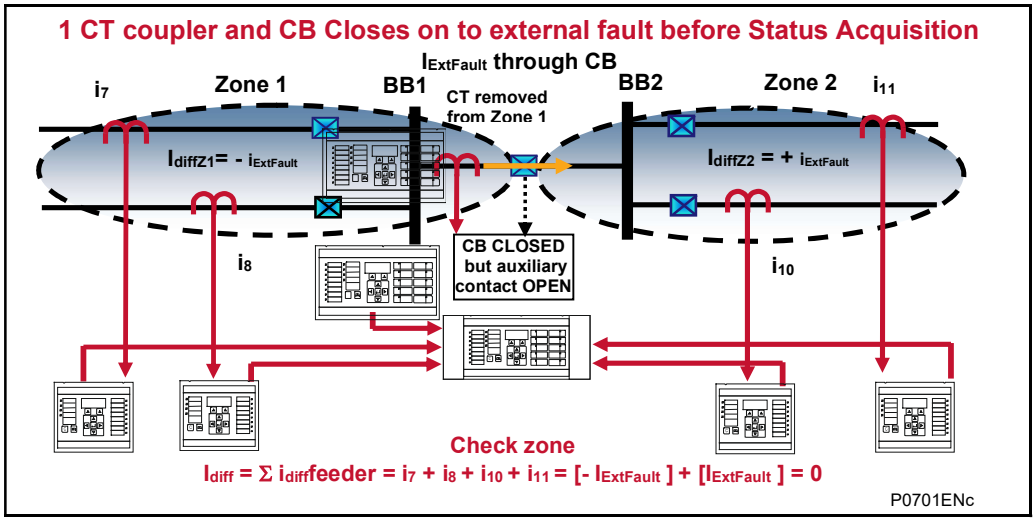

Figure 28: CTs on One Side of Bus Coupler, CB Closes before Status Acquisition

As the CB has closed but the status has not yet been refreshed the topology still believes the CB to be open.

Treating this as an open bus coupler circuit breaker the topology algorithm will have extended Zone 1(with the area located between the CT and the circuit breaker). This then fully replicates the scheme up to the open bus coupler CB on both sides.

If the circuit breaker was open, no load current would flow through the circuit breaker. The differential current in the two main zones would equal zero, as the current flowing into the zones would still equal the current flowing out.

However, if the circuit breaker is closed, the external fault current will flow through the circuit breaker. The differential current in main zone 1 and in main zone 2 will be equal in magnitude but opposite in sign ($\pm_{fault}$).

When the check zone element is calculated, the differential currents seen in zone 1 and 2, which result from the discrepancy in the plant status, can be seen to be cancelled out.

Zone 1 $I_{diff} = I_7 + I_8 = i_{diff}Z1 = -i_{fault} > (I_D>2 + k2 \times I_{Bias})$

Zone 2 $I_{diff} = I_{10} + I_{11} = i_{diff}Z2 = +i_{fault} > (I_D>2 + k2 \times I_{Bias})$

Check zone $I_{diff} = I_7 + I_8 + I_{10} + I_{11} = (-i_{fault}) + (+i_{fault}) = \varnothing$

Again, the system retains its stability for discrepancies in plant status (even for switch onto fault).

9.6.5 CTs on Both Sides of Bus Coupler, CB Closes before Status Acquisition

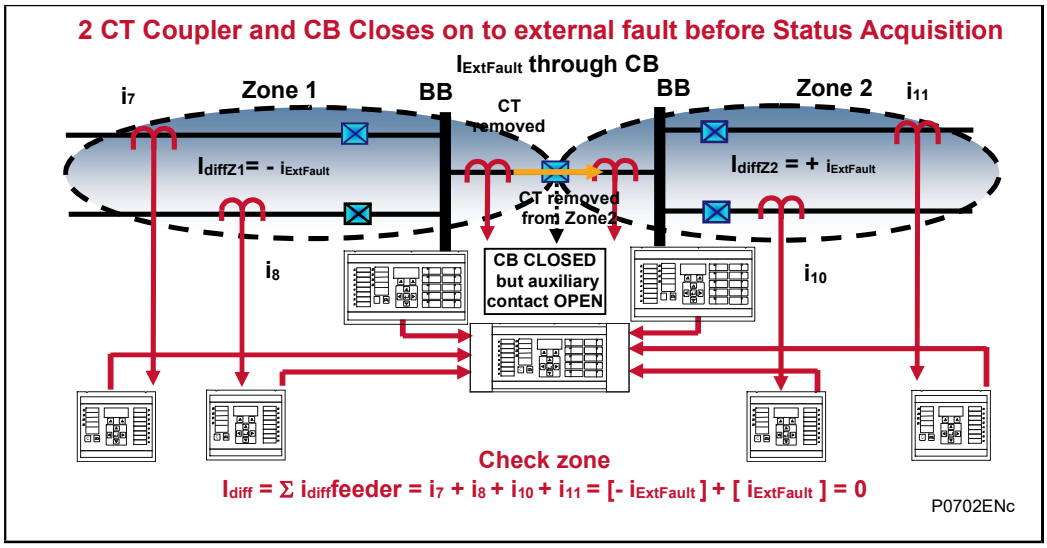

Figure 29: CTs on Both Sides of Bus Coupler, CB Closes before Status Acquisition

As the CB has closed but the status has not yet been refreshed the topology still believes the CB to be open.

Treating this as an open bus coupler the topology algorithm will have extended the two zones with the areas located between the CTs and the circuit breaker. These then fully replicate the scheme up to the open bus coupler CB on both sides.

If the circuit breaker was open, no load current would flow through the circuit breaker. The differential current in the two main zones would equal zero, as the current flowing into the zones would still equal the current flowing out.

However, if the circuit breaker is closed, the external fault current will flow through the circuit breaker. The differential current in the two main zones will be equal in magnitude but opposite in sign ($\pm i_{fault}$).

When the check zone element is calculated, the differential currents seen in the two main zones, which result from the discrepancy in the plant status and which are taken into account for the check zone calculation, can be seen to be cancelled out.

Zone 1 $I_{diff} = I_7 + I_8 = i_{diff}Z1 = -i_{fault} > (I_D>2 + k2 \times I_{Bias})$

Zone 2 $I_{diff} = I_{10} + I_{11} = i_{diff}Z2 = +i_{fault} > (I_D>2 + k2 \times I_{Bias})$

Check zone $I_{diff} = I_7 + I_8 + I_{10} + I_{11} = (-i_{fault}) + (+i_{fault}) = \varnothing$

Hence, the system retains its stability even when there are discrepancies in plant status.

9.6.6 CTs on One Side of Bus coupler, CB Closed and Fault Evolves between CT and CB (even for switch onto fault)

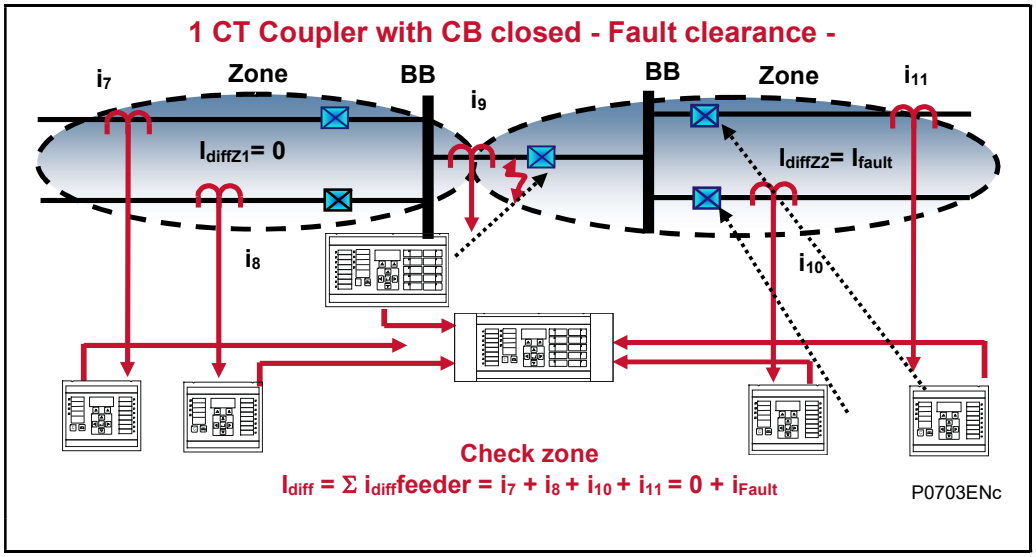

Figure 30: CTs on One Side of Bus Coupler, CB Closed and Fault Occurs between the CB and CT

Treating this as a closed bus section circuit breaker, the topology algorithm will have extended the limits of the main zones to the bus coupler CT. This then fully replicates the scheme.

Under normal operating conditions when the circuit breaker is closed, load current would flow through the circuit breaker and differential current in the two main zones would equal zero, as the current flowing into the zones would still equal the current flowing out.

However, if a fault occurs between the CT and the circuit breaker, the current will flow from zone 1 into zone 2 which feeds the fault. The differential current in main zone 1 will still equal zero, as the current flowing into zone 1 will still equal the current flowing out, but the differential current measured in zone 2 will be equal to that of the fault current.

In this case, zone 2 would operate as well as the check zone element.

Zone 1 $I_{diff} = I_7 + I_8 + I_9 = i_{diff}Z1 = 0$

Zone 2 $I_{diff} = I_9 + I_{10} + I_{11} = i_{diff}Z2 = i_{fault} > (I_D>2 + k2 \times I_{Bias})$

Check zone $I_{diff} = I_7 + I_8 + I_{10} + I_{11} = i_{diff}Z2 = i_{fault} > (I_DCZ>2 + kCZ \times I_{Bias})$

However, when zone 2 trips the fault will still be present. The topology then analyses the remainder of the system as follows.

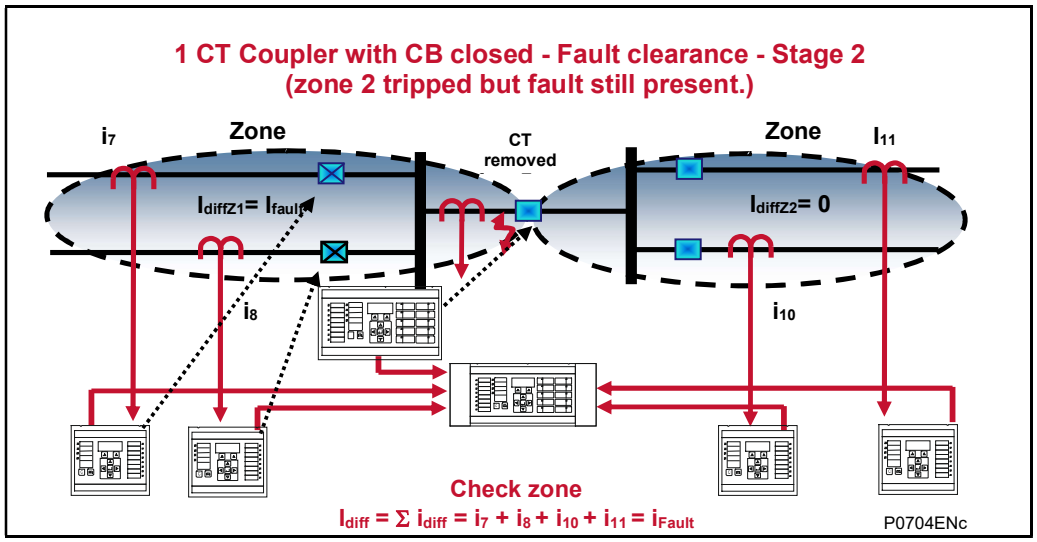

Figure 31: Zone 2 Tripped, with Fault

Treating this as an open bus coupler circuit breaker as before the topology algorithm will have extended zone 1 with the area located between the CT and the circuit breaker. This then fully replicates the scheme up to the open bus coupler CB. Remember that in this example zone 2's limit extended up to the circuit breaker, but this zone has been tripped already.

The circuit breaker is now open, and the fault current would flow to feed the fault. The differential current in the main zone 2 would equal zero, as the current is flowing into zone 1 whereas the current measured will be equal to the fault current i_{fault}.

Zone 2 $I_{diff} = I_{10} + I_{11} = i_{diff}Z2 = 0$

Zone 1 $I_{diff} = I_7 + I_8 = i_{diff}Z1 = i_{fault} > (I_D>2 + k2 \times I_{Bias})$

Check zone $I_{diff} = I_7 + I_8 + I_{10} + I_{11} = i_{diff}Z1 = i_{fault} > (I_DCZ>2 + kCZ \times I_{Bias})$

Hence, the system reacts to the continuing presence of the fault and trips the zone 1 as the check zone $I_{diff} > (I_DCZ>2 + kCZ \times I_{Bias})$ and the zone $I_{diff} > (I_D>2 + k2 \times I_{Bias})$.

In this example the opposite zone is tripped first but the dynamic topology reacts to the changed scheme and subsequently trips the adjacent main zone.

9.6.7 CTs on Both Sides of Coupler, CB closed and Fault Evolves between CT and CB

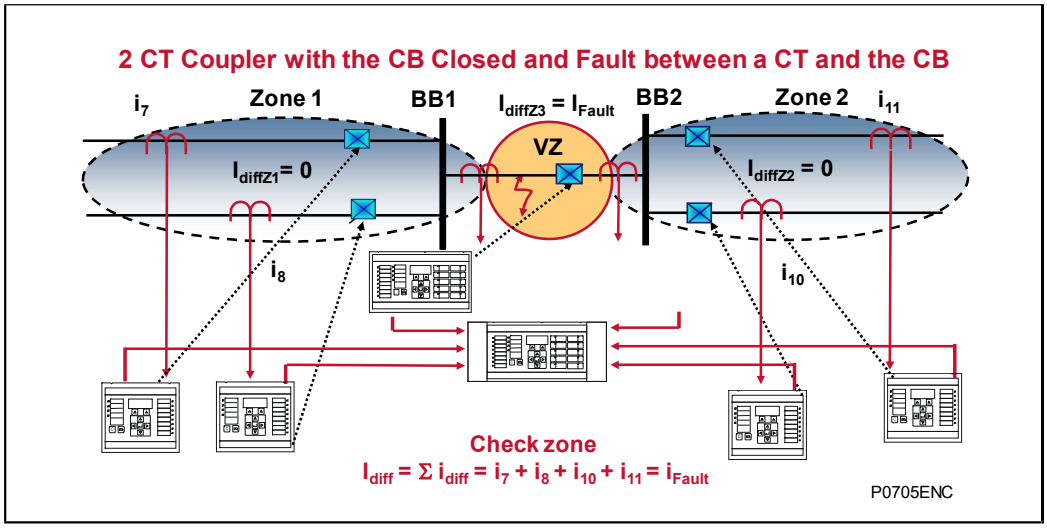

Figure 32: CTs on Both Sides of Coupler, CB closed and Fault Evolves between CT and CB

Treating this as a closed bus section circuit breaker, the topology algorithm will have created a virtual zone that surrounds the circuit breaker with the bus coupler CTs as its limits called zone 3 in the event report and measurements. This then fully replicates the scheme.

Under normal operating conditions when the circuit breaker is closed, the load current would flow through the circuit breaker and hence the virtual zone. The differential current in the two main zones would equal zero, as the current flowing into the zones would still equal the current flowing out. This is also the case for the virtual zone around the bus coupler.

However, if a fault was to occur in the virtual zone, current would flow into the virtual zone and feed the fault. The differential current in the two main zones will still equal zero, as the current flowing into the zone(s) will still equal the current flowing out, but the differential current measured in the virtual zone will be equal to that of the fault current.

The main zones would not operate but the virtual zone or zone 3, which surrounds the bus coupler and has limits at the bus coupler CTs would operate. When the check zone element is calculated, the differential current seen in the virtual zone or zone 3, which results from the presence of the fault in the coupler, will confirm the presence of a fault and initiate either (1) a simultaneous trip of both main zones or (2) a step by step trip of, first the coupler then, once the topology has been refreshed, the faulty zone 1 (longer fault clearance: around 60 ms + 2 x opening time of the breakers).

(1) Hence, the system reacts to a fault occurring between the CT and the CB simultaneously tripping both adjacent zones.

Zone 1 $I_{diff} = I_7 + I_8 + I_9 = i_{diff}Z1 = 0$

Zone 2 $I_{diff} = I_{10} + I_{11} + I_{12} = i_{diff}Z2 = 0$

3 $I_{diff} = I_9 + I_{12} = i_{diff}Z2 = i_{fault} > (I_D>2 + k2 \times I_{Bias})$

Check zone $I_{diff} = I_7 + I_8 + I_{10} + I_{11} = i_{diff}Z3 = i_{fault}$

(2) The bus coupler can operate first for a fault in the virtual zone or zone 3 and then the faulty zone 1, zone 2 will remain in service. For such operation a special topology scheme should be used.

First:

Zone 1 $I_{diff} = I_7 + I_8 + I_9 = i_{diff}Z1 = 0$

Zone 2 $I_{diff} = I_{10} + I_{11} + I_{12} = i_{diff}Z2 = 0$

Zone 3 $I_{diff} = I_9 + I_{12} = i_{diff}Z2 = i_{fault} > (I_D>2 + k2 \times I_{Bias})$

Check zone Idiff = $I_7 + I_8 + I_{10} + I_{11} = i_{diff}Z3 = i_{fault} > (I_DCZ>2 + kCZ \times I_{Bias})$

After the coupling breaker has been tripped:

Zone 1 Idiff = I7+ I8=idiffZ1 = ifault > (ID>2 + k2 x IBias)

Zone 2 Idiff = I10+ I11= idiffZ2 = 0

Check zone Idiff = I7+ I8+ I10+ I11= idiffZ1 = ifault > (IDCZ>2 + kCZ x IBias)

Note 1: As the topology algorithm scheme updates every 16 ms. The longest time to update the topology after Isolator/CB auxiliary contacts change state is 33 ms.

Note 2: For Differential Busbar protection the status positions of the breakers are not taken into account.

10. UNDERTAKING A NUMERICAL DIFFERENTIAL BUSBAR PROTECTION PROJECT

This Engineering must be done by a P74x Competency Centre.

The substation construction will influence the protection scheme installed. It is advisable that a scheme evaluation is conducted as soon as possible, preferably at the same time as the definition of the equipment specification.

10.1 Check List

The following steps must be taken:

Engineering phase:

1. Check the CT compliance
   (using VkTest.xls & Rct_Approx.xls)
2. Design the Junction schemes
   (using AUTOCAD (or equivalent))
3. Create the material definition and the wiring plans
   (distributed or centralised version)
4. Create the wiring diagram
   (distributed version)
5. Label the relay Inputs & Outputs
   (using S1 Setting (per Group))
6. Calculate the Central Unit settings
   (using Idiff_Ibias_xxx.xls & P74x setting guide)
7. Calculate the different Peripheral Units settings
   (transformer, coupler, line, etc…)
8. Draw the topology line diagram
   (using Scheme Editor and Topology Tips)
9. Create the topology files
   (using Synoptic Editor and Topology Tips)
10. Merge the parameter files with the topology files
    (using P74x File Merger)
11. Merge the testing parameter files with the topology files
    (using P74x File Merger)
12. Create the CU PSL file
    (using S1 & Tips)
13. Create the PU PSL files
    (using S1 & Tips)
14. Print out the front panel Labels (CU & PUs)
    (using P74x_Stickers.xls)
15. Write up the test specification
16. Write up the insulation test specification
    (centralised version)

After reception of the relays & KITZ(s):

Testing phase:

1. Stick the labels on the front of the CU & PUs
2. Mount the relays in the (or a) cubicle
3. Wire them to the Substation Simulation Box(es)

4. Put the right addresses into the relays (CU = 06, PU from 07)
5. Put the right addresses into the KITZs
   (using comms.xls)
6. Download the complete setting files into the relays
   (using S1)
7. Download the setting files into the KITZs
   (using comms.xls)
8. Download the PSL files into the relays
   (using S1)
9. Test the PSLs & Analogue inputs
   (using a Inputs / Outputs and current generator)
10. Put the default Substation Testing Box relay settings
    (using S1)
11. Test the Topology according to the test specification
12. Test the communication links (KITZ)
    (using Master (courier))
13. Perform the FAT with the customer
14. Put the project relay settings
    (using S1)

Commissioning phase:

1. Check the inputs/outputs
2. Check CT connections (per phase (A, then B, then C))
3. Add Rb & Rbph/Rbn CT parameters in the Pus
   (using RBurden_b.xls)
4. Check the measurements and the tripping slopes
   (see documentation)

10.2 General Substation Information

Only a few system parameters are required, and it is vital that these are included.

- Number of feeders, bus couplers, bus sections
- Positions of bus sections
- Positions of switchgear plant i.e. circuit breakers, isolators
- Positions of CTs (including the polarity (P1/P2 - S1/S2))
- Planned future extensions with circuit breaker, isolator and current transformer (CT)
- Type of electrical network earthing (Solid, High impedance or compensated)

10.3 Short Circuit Levels

Maximum external fault current (phase to phase and phase to ground faults)

- Solid:
  - Minimum two phase busbar fault current
  - Minimum load current on the smallest feeder
  - Maximum load current on the biggest feeder or coupler
  - Optional: Maximum three phase busbar fault current

- Compensated:
  - Minimum two phase busbar fault current
  - Maximum single-phase steady state busbar fault current
  - Maximum load current on the biggest feeder
  - Optional: Maximum three phase busbar fault current
- With impedance:
  - Minimum two phase busbar fault current
  - Minimum single phase to earth busbar fault current
  - Minimum load current on the smallest feeder
  - Maximum load current on the biggest feeder
  - Optional: Maximum three phase busbar fault current
  - Maximum substation short-circuits withstand time

10.4 Switchgear

- Nominal CT ratio
- Highest nominal primary current (CT In Max)
- Lowest nominal primary current (CT In Min)
- CT Knee point voltage (Vk) for each CT
- CT secondary resistance (RCT) for each CT
- Length and cross section of the conductors between each CT and the peripheral unit. (In the absence of precise information, an estimate taken from the lowest CT ratio will suffice)
- Auxiliary contacts of disconnecting switches and tripping orders for circuit breaker failure (irrespective of the how the CB fail scheme is to be implemented i.e. internally or externally initiated)

10.5 Cubicle Specifications

- Cubicle specification is contract specific.
- However, GE Vernova propose the following:
- Single cubicle: 800x800x2000
- Double cubicle: 1600x800x2000
- Model: Schroff type Proline
- Colour: RAL 70321

  1 P741 and P742:

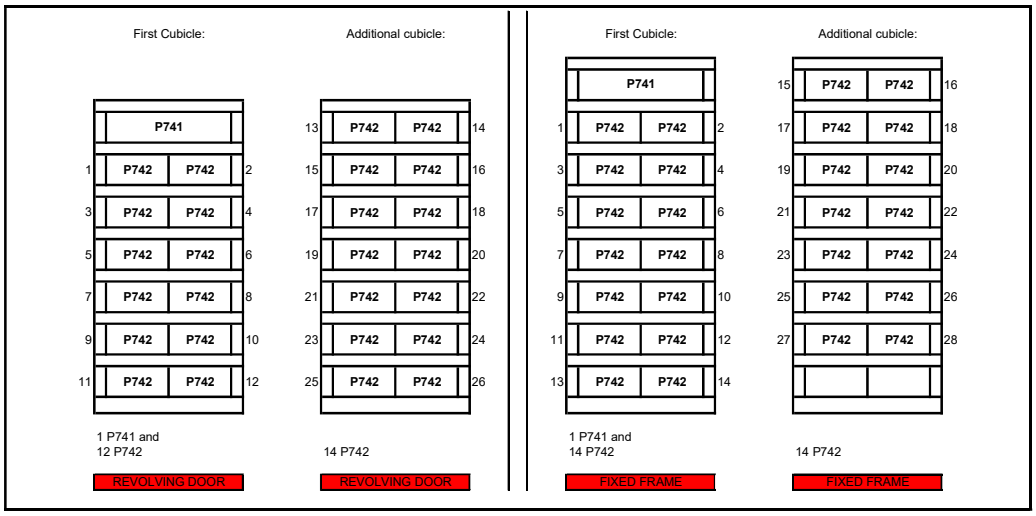

Figure 33: P741 and P742 with P99x Test Block

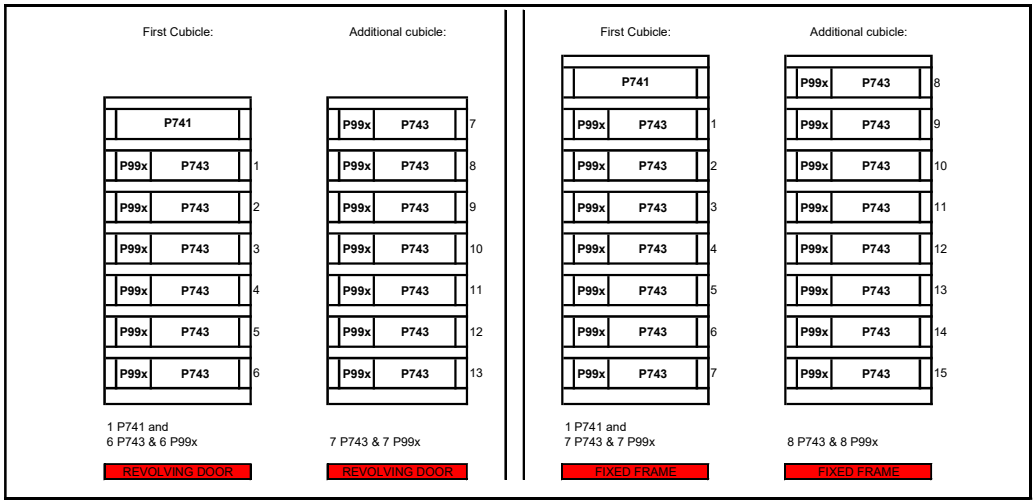

Figure 34: P741 and P743 with or without P99x Test Block

10.6 Substation Architecture

Due to the flexibility of the differential busbar protection there is an infinite number of busbar configurations that can be accommodated via the topology. Each may have very different architecture and, therefore, vary in complexity.

You will find in the following pages topology examples of layouts most frequently encountered. For each example, the number of central units and peripheral units necessary to protect the busbars is specified.

Generally, the elements of the protection architecture will be identified in a similar manner to the principal parts of the substation e.g. by the letters A and B.

Note: A cubicle needs to be considered for a centralized solution whereas if the peripheral units are distributed and the scheme is distributed there is no requirement for a dedicated cubicle.

In both cases, and before any delivery, the topology will be thoroughly tested on appropriate test platforms the scheme is engineered by a GE competency centre).

11. STANDARD CONFIGURATIONS

The following information relates only to the more common standard schemes. For further information on the accommodation of other busbar configurations consult your GE Vernova representative.

The main rule to calculate the minimum number of Peripheral Unit to use is:

1 Peripheral Unit per CT.

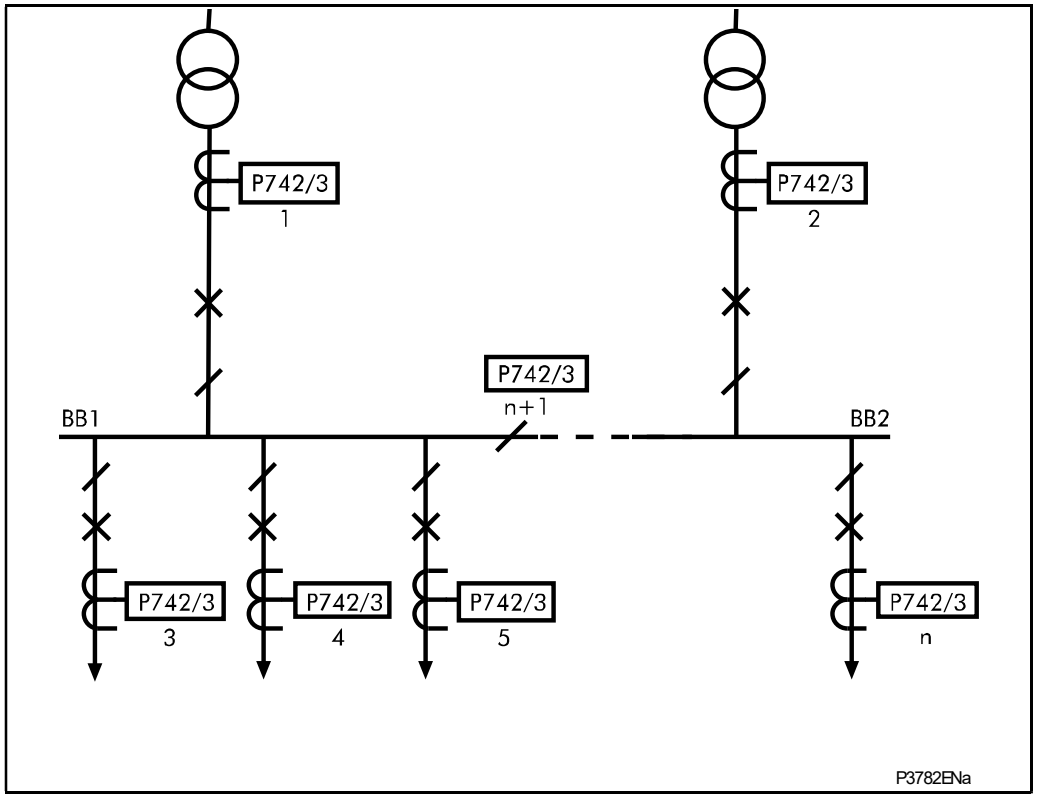

Figure 35: Single Busbar Application with Bus Section Isolator

The above example shows a single busbar with a bus section isolator. It is split into two zones. There are n feeders connected to the busbar. This configuration requires 1 central unit and n peripheral units (the additional peripheral unit being for the bus section isolator is optional). The type of peripheral unit used for each bay will depend on the i/o requirements of the bay in question.

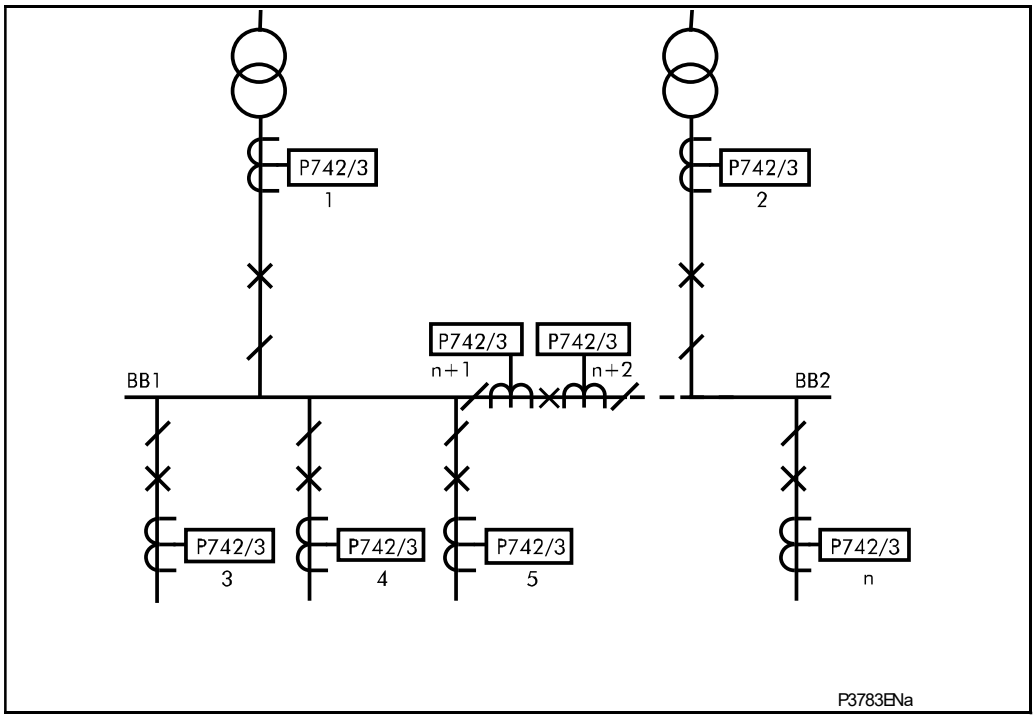

Figure 36: Single Busbar Application with Bus Section Circuit Breaker

The above example shows a single busbar with a bus section circuit breaker. It is split into two zones. There are n feeders connected to the busbar. The bus section circuit breaker has CTs on either side.

This configuration requires 1 central unit and n + 2 peripheral units (the additional peripheral units being for the bus section CTs). The type of peripheral unit used for each bay will depend on the i/o requirements of the bay in question.

It is recommended that the CTs for feeder protection are sited to overlap with the CTs defining the limits of each busbar protection zone.

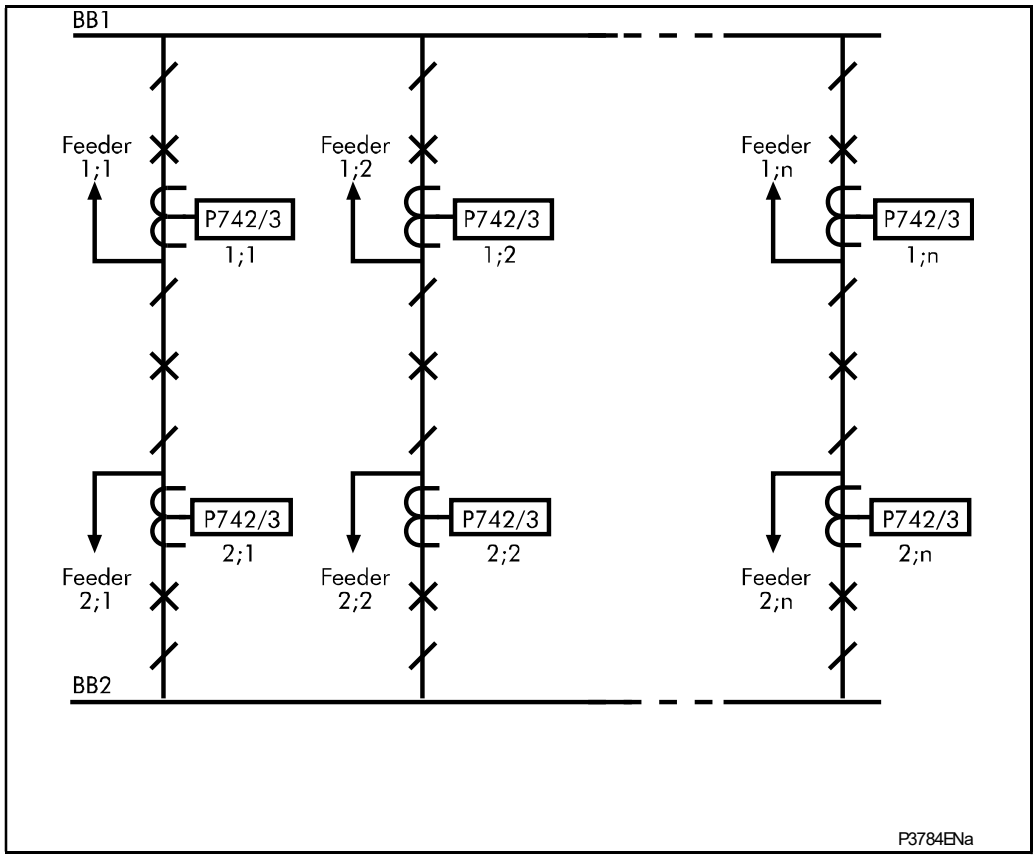

Figure 37: Breaker and a Half Scheme

The recommended solution is to have two separate schemes. There are n feeders connected to each busbar.
Each scheme will require 1 central unit and n peripheral units. Another solution is to use only one central unit and 2 x n peripheral units. The type of peripheral unit used for each bay will depend on the i/o requirements of the bay in question.

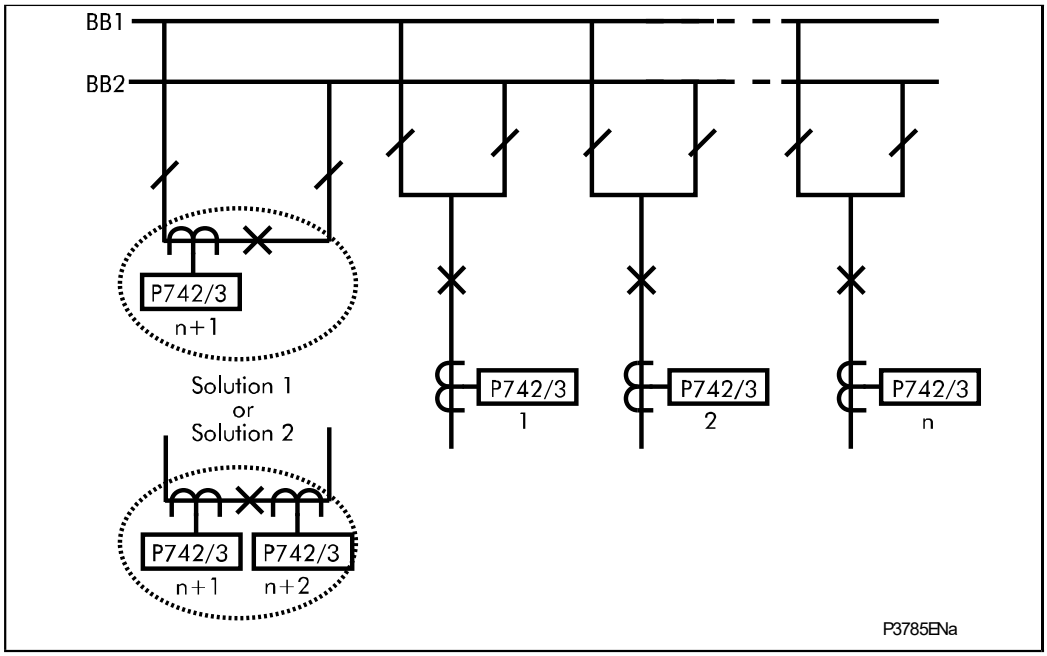

Figure 38: Double Busbar Application with Bus Coupler

The above example is split into two zones. There are n feeders connected to the busbar. The bus coupler circuit breaker can have either a single CT (solution 1) on one side or CTs on both sides (solution 2).

This configuration requires 1 central unit and n + 1 peripheral units for solution 1 or n + 2 peripheral units for solution 2. (The additional peripheral units being for the bus coupler CTs). The type of peripheral unit used for each bay will depend on the i/o requirements of the bay in question.

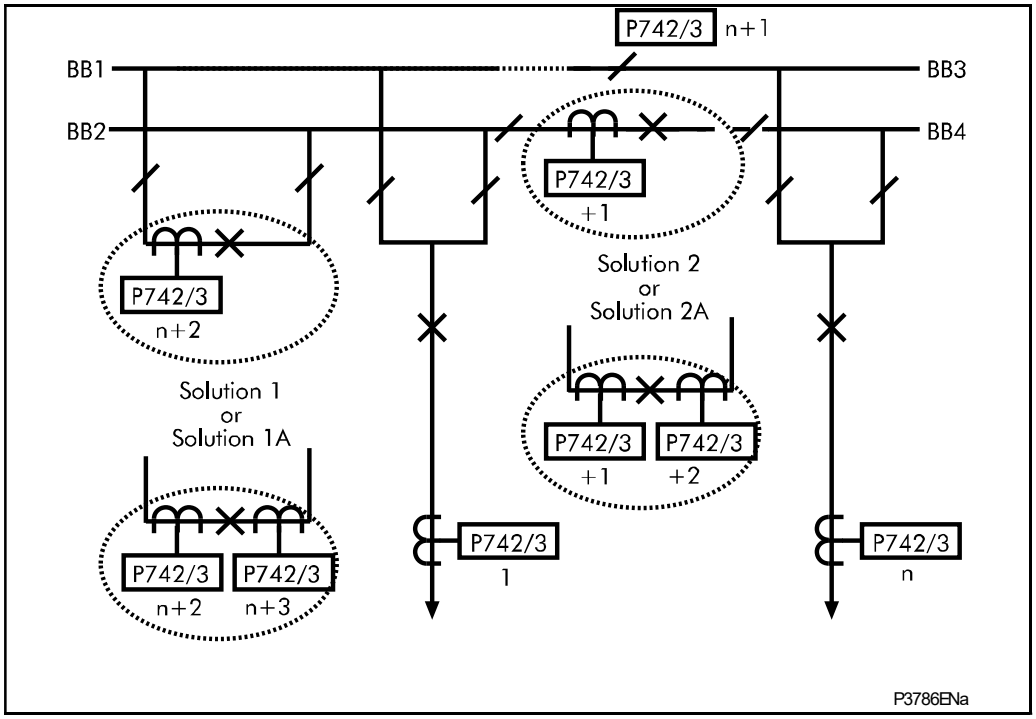

Figure 39: Traditional Double Busbar Application with Bus Coupler and Bus Section

The above example is split into four zones. There are n feeders connected to the busbar. The bus coupler and bus section circuit breakers can have either a single CT (solution 1 and 2) on one side or CTs on both sides (solution 1a or 2a). This configuration requires 1 central unit and n plus the following number of peripheral units. The total number of peripheral units required allows for a peripheral unit for the bus section isolator on the upper bar.

Number of required pu's for the figure above

Solution	Solution A 1 CT on BC & 1 CT on BS	Solution B 2 CT on BC & 2 CT on BS	Solution C 1 CT on BC & 2 CT on BS	Solution D 2 CT on BC & 1 CT on BS
Solution 1	✓	×	✓	×
Solution 1a	×	✓	×	✓
Solution 2	✓	×	×	✓
Solution 2a	×	✓	✓	×
Number of peripheral units required	n + 2	n + 4	n + 3	n + 3
If a second bus coupler is added i.e. one bus coupler either side of the bus section				
Using solution 1 for the 2nd coupler	✓	×	✓	×
Using solution 1a for the 2nd coupler	×	✓	×	✓
Number of peripheral units required	n + 3	n + 6	n + 4	n + 5

The additional peripheral unit being for the bus section isolator is optional.

The number of additional peripheral units depends on the number of bus section/bus coupler CTs. The type of peripheral unit used for each bay will depend on the i/o requirements of the bay in question.

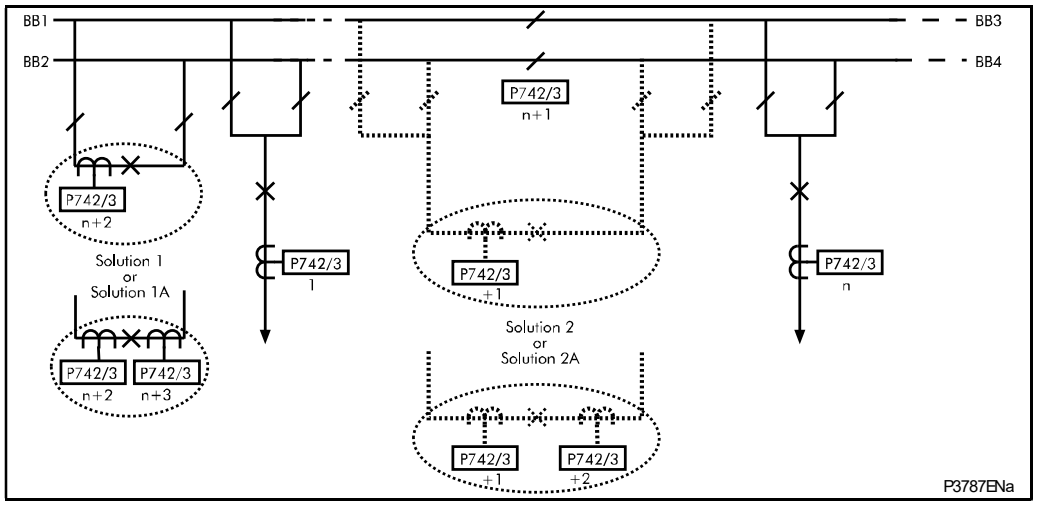

Figure 40: Double Busbar Application with Bus Coupler, Bus Section and Additional Bus Section Isolators

The above example shows a double busbar with both a bus section and a bus coupler. The bus section also has additional bus section isolators and allows for bus section bypass. The scheme is split into four zones. There are n feeders connected to the busbar. The bus coupler and bus section circuit breakers can have either a single CT (solution 1 and 2) on one side or CTs on both sides (solution 1a or 2a). This configuration requires 1 central unit and n plus the following number of peripheral units. The total number of peripheral units required allow for a peripheral unit for the bus section isolators.

Number of required pu's for the figure above

Solution	Solution A 1 CT on BC & 1 CT on BS	Solution B 2 CT on BC & 2 CT on BS	Solution C 1 CT on BC & 2 CT on BS	Solution D 2 CT on BC & 1 CT on BS
Solution 1	✓	×	✓	×
Solution 1a	×	✓	×	✓
Solution 2	✓	×	×	✓
Solution 2a	×	✓	✓	×
Number of peripheral units required	n + 2	n + 4	n + 3	n + 3
If a second bus coupler is added i.e. one bus coupler either side of the bus section				
Using solution 1 for the 2nd coupler	✓	×	✓	×
Using solution 1a for the 2nd coupler	×	✓	×	✓
Number of peripheral units required	n + 3	n + 6	n + 4	n + 5

The additional peripheral unit for the bus section isolators is optional.

The number of additional peripheral units depends on the number of bus section/bus coupler CTs. The type of peripheral unit used for each bay will depend on the i/o requirements of the bay in question.

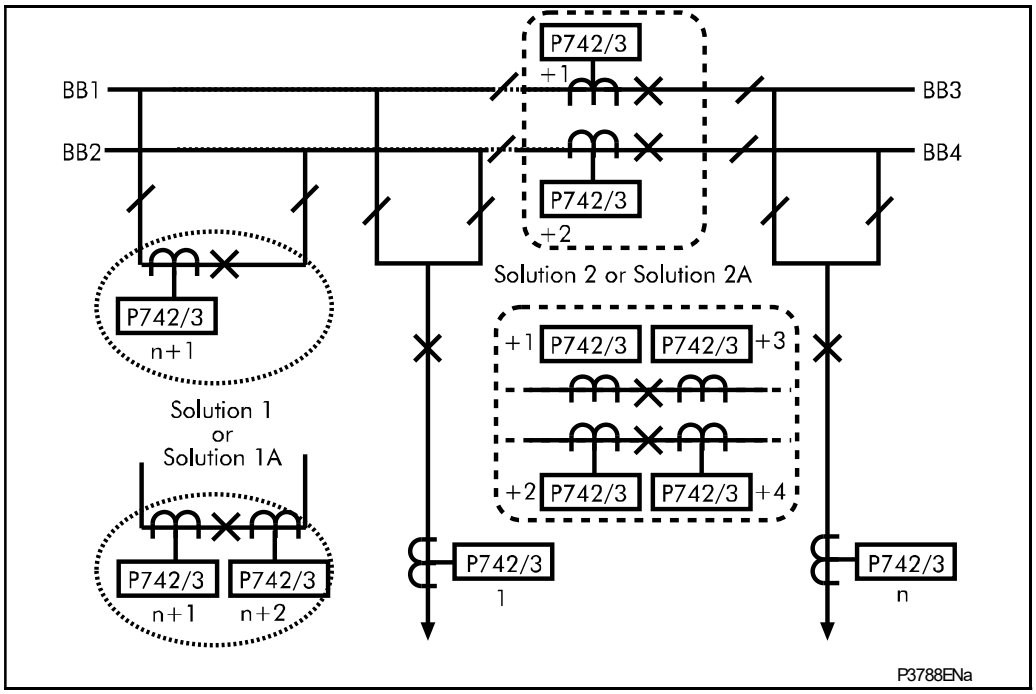

Figure 41: Double Busbar Application with Bus Coupler and Double Bus Section Circuit Breaker Arrangement

The above example shows a double busbar with both a bus section and a bus coupler. There are circuit breakers on both the upper and lower bars. The scheme is split into four zones. There are n feeders connected to the busbar. The bus coupler and bus section circuit breakers can have either a single CT (solution 1 and 2) on one side or CTs on both sides (solution 1a or 2a). This configuration requires 1 central unit and n plus the following number of peripheral units. The total number of peripheral units required allows for a peripheral unit for the bus section isolator on the upper bar.

Number of required pu's for the figure above

Solution	Solution A 1 CT on BC & 1 CT on each BS	Solution B 2 CT on BC & 2 CT on each BS	Solution C 1 CT on BC & 2 CT on each BS	Solution D 2 CT on BC & 1 CT on each BS
Solution 1	✓	×	✓	×
Solution 1a	×	✓	×	✓
Solution 2	✓	×	×	✓
Solution 2a	×	✓	✓	×
Number of peripheral units required	n + 3	n + 6	n + 5	n + 4
If a second bus coupler is added i.e. one bus coupler either side of the bus section				
Using solution 1 for the 2nd coupler	✓	×	✓	×
Using solution 1a for the 2nd coupler	×	✓	×	✓
Number of peripheral units required	n + 4	n + 8	n + 6	n + 6

The number of additional peripheral units depends on the number of bus section/bus coupler CTs. The type of peripheral unit used for each bay will depend on the i/o requirements of the bay in question.

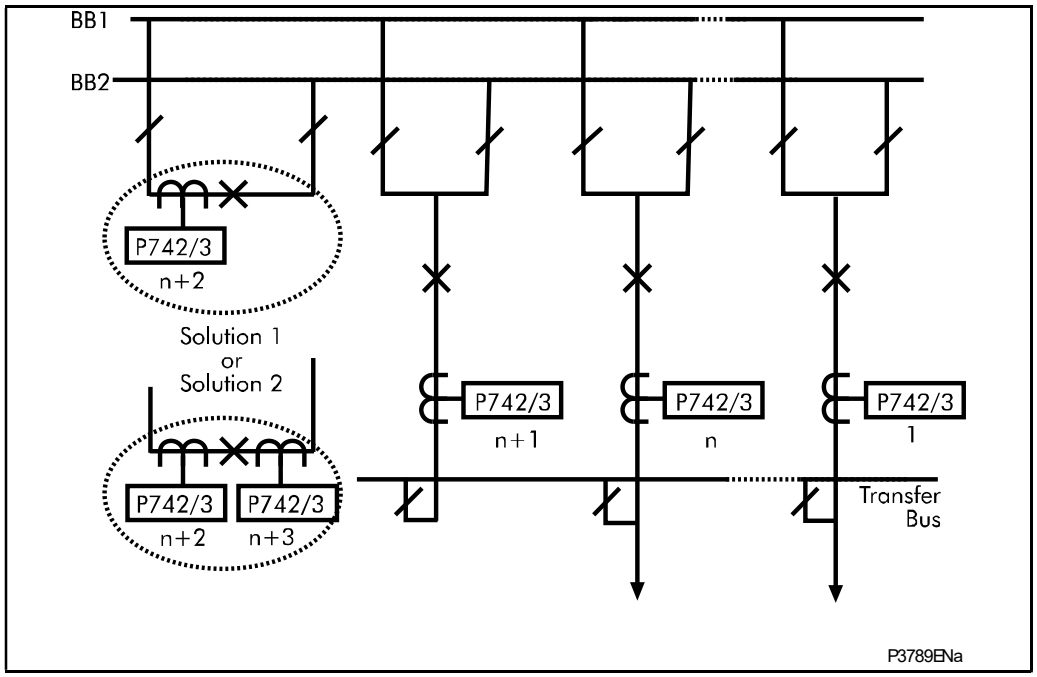

Figure 42: Double Busbar Application with Bus Coupler

The above example shows a double busbar with a bus coupler and a transfer busbar. As the transfer busbar is on the line side of all the feeder CTs, it is not included in the protected zone it can be considered similarly to figure 43: transfer busbar

, an additional peripheral unit must be included for the transfer bay.

It is split into two zones. There are n feeders connected to the busbar. The bus coupler circuit breaker can have either a single CT (solution 1) on one side or CTs on both sides (solution 2). This configuration requires 1 central unit and n + 2 peripheral units for solution 1 or n + 3 peripheral units for solution 2. (The additional peripheral units being for the bus coupler CTs and the transfer bay). The type of peripheral unit used for each bay will depend on the i/o requirements of the bay in question.

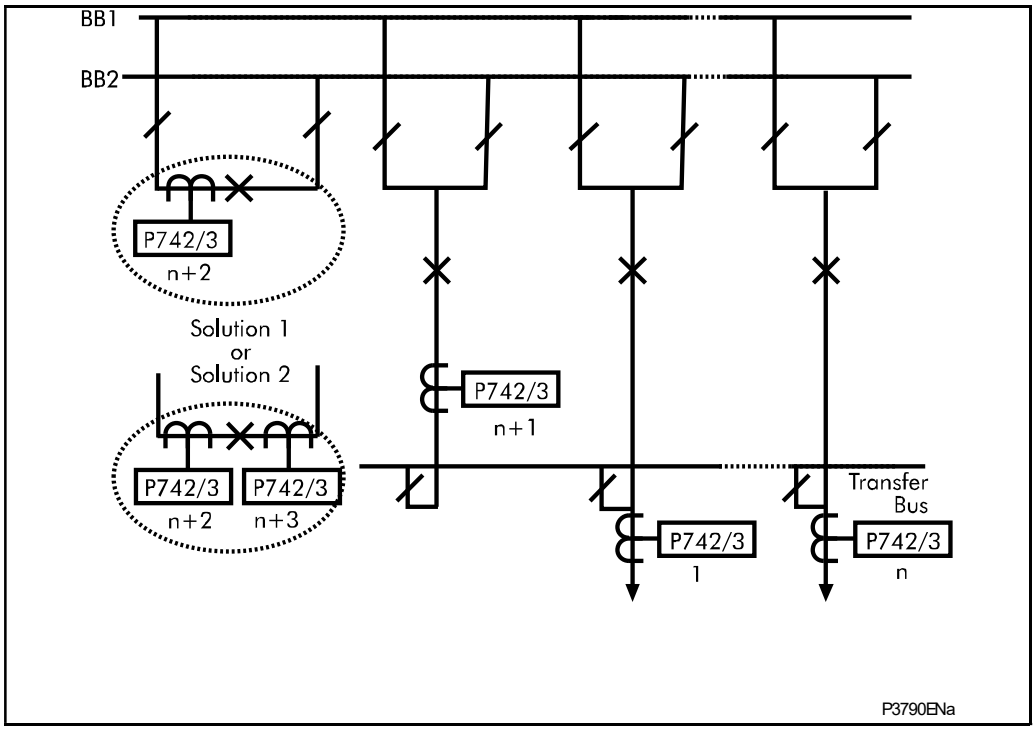

Figure 43: Transfer Busbar

The above example shows a double busbar with a bus coupler and a transfer busbar. The transfer busbar is on the bus side of all the feeder CTs, it is included in the protected zone. It can be considered similarly to the next figure, where an additional peripheral unit has been included for the transfer bay. The only difference being the positioning of the CTs and therefore the protection.

Again, it is split into two zones. With an additional zone for the transfer bay, there are n feeders connected to the busbar. The bus coupler circuit breaker can have either a single CT (solution 1) on one side or CTs on both sides (solution 2). This configuration requires 1 central unit and n + 2 peripheral units for solution 1 or n + 3 peripheral units for solution 2. (The additional peripheral units being for the bus coupler CTs and the transfer bay). The type of peripheral unit used for each bay will depend on the i/o requirements of the bay in question.

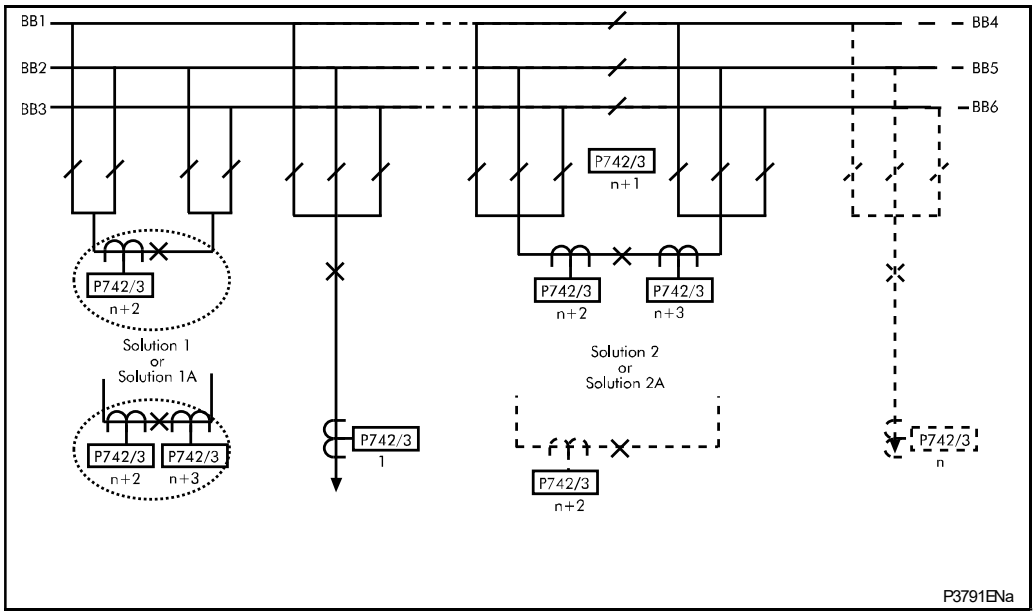

Figure 44: Triple Busbar Application with Bus Coupler and Bus Section

The above example shows a triple busbar with both a bus section and a bus coupler. The bus section also has additional bus section isolators and allows for bus section bypass. The scheme is split into six zones. There are n feeders connected to the busbar. The bus coupler and bus section circuit breakers can have either a single CT (solution 1 and 2) on one side or CTs on both sides (solution 1a or 2a). This configuration requires 1 central unit and n plus the following number of peripheral units. The total number of peripheral units required allows for a peripheral unit for the bus section isolators.

Number of required pu's for the figure above

Solution	Solution A 1 CT on BC & 1 CT on BS	Solution B 2 CT on BC & 2 CT on BS	Solution C 1 CT on BC & 2 CT on BS	Solution D 2 CT on BC & 1 CT on BS
Solution 1	✓	×	✓	×
Solution 1a	×	✓	×	✓
Solution 2	✓	×	×	✓
Solution 2a	×	✓	✓	×
Number of peripheral units required	n + 2	n + 4	n + 3	n + 3
If a second bus coupler is added i.e. one bus coupler either side of the bus section				
Using solution 1 for the 2nd coupler	✓	×	✓	×
Using solution 1a for the 2nd coupler	×	✓	×	✓
Number of peripheral units required	n + 3	n + 6	n + 4	n + 5

The additional peripheral unit for the bus section isolators is optional.

The number of additional peripheral units depends on the number of bus section/bus coupler CTs. The type of peripheral unit used for each bay will depend on the i/o requirements of the bay in question.

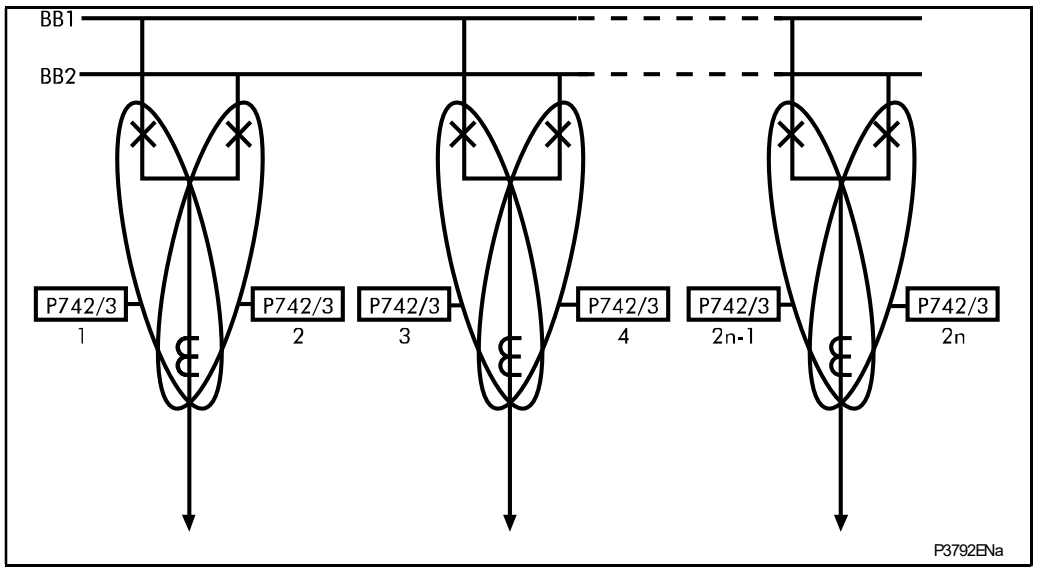

Figure 45: Double Bus Bar with Two Circuit Breakers per Feeder

The above example shows a double busbar with two circuit breakers on each feeder. The scheme is split into two zones. There are n feeders connected to the busbar. This configuration should require 1 central unit and 2 x n peripheral units but only n Peripheral Units can be used. In each bay the two peripheral units should share the CT, and each circuit breaker should be assigned to a separate peripheral unit but when one Peripheral Unit is used per feeder, the trip order is connected to the two breakers.

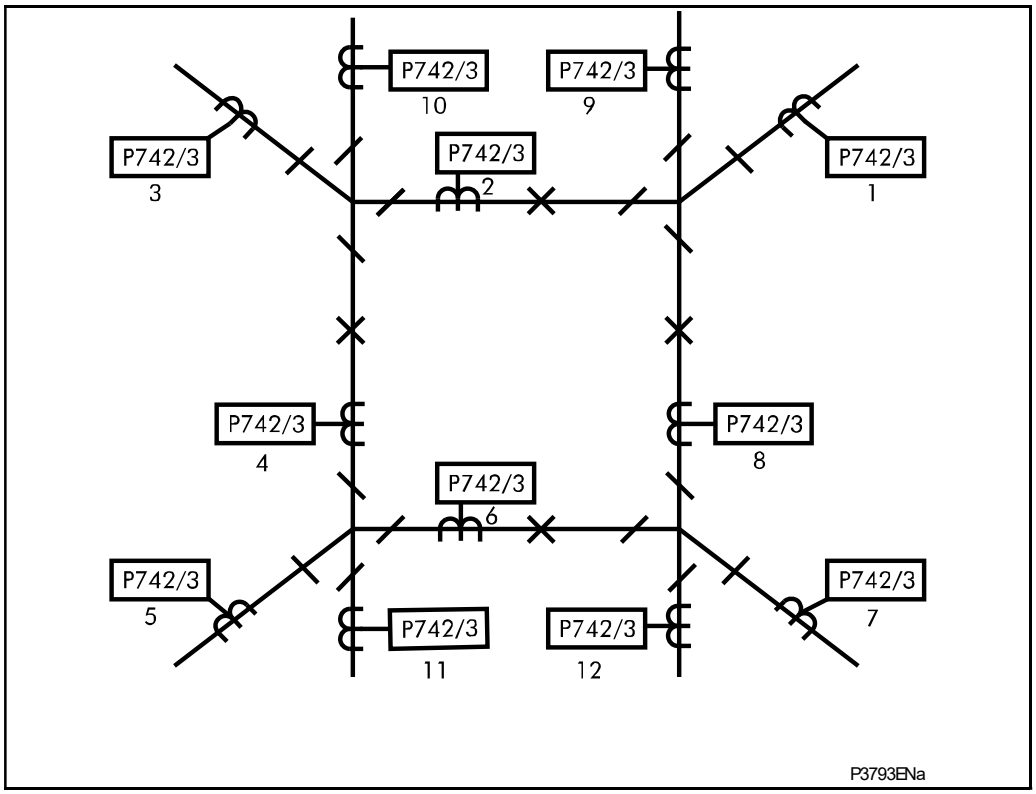

Figure 46: Mesh Corner

The above example shows a mesh corner arrangement. The scheme is split into four zones. This configuration requires 1 central unit and 12 peripheral units.

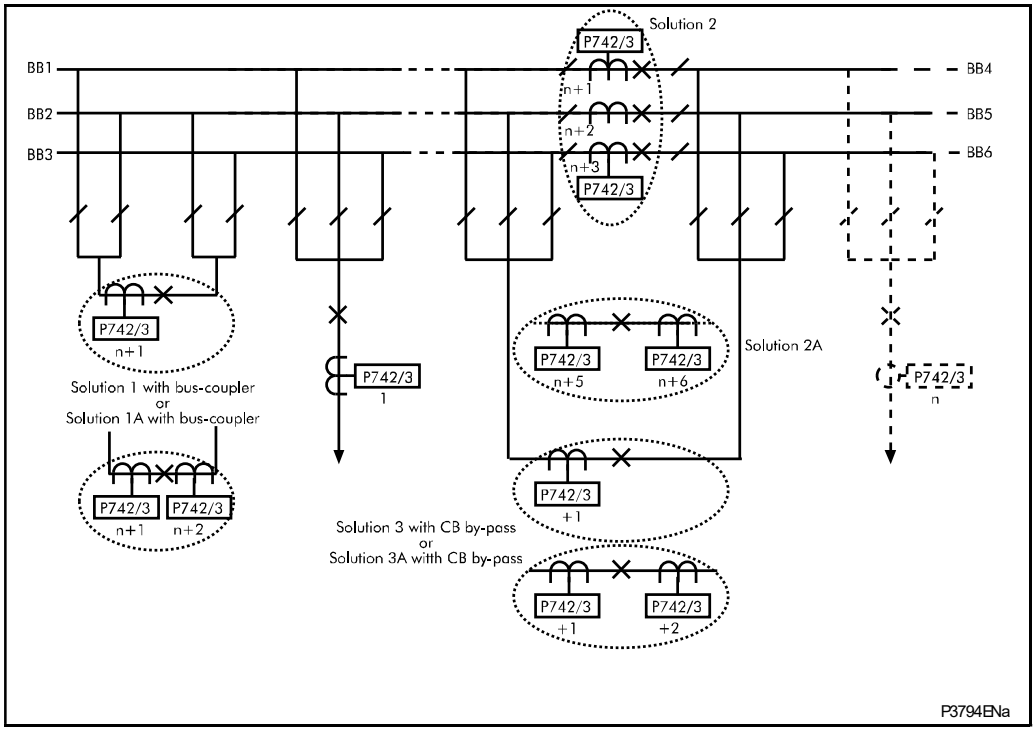

Figure 47: Six Main Bus for S/S CB Bus-sections and CB Bypass

The above example shows a six busbar arrangement with both a bus section and a bus coupler. It is also possible to include bypass facilities. The scheme is split into six zones. There are n feeders connected to the busbar. The bus coupler, bus section and bypass

circuit breakers can have either a single CT (solution 1, 2 and 3) on one side or CTs on both sides (solution 1A, 2A and 3A).

This configuration requires 1 central unit and n plus the following number of peripheral units.

Number of required pu's for the figure above

Solution	Solution A 1 CT on BC & 1 CT on each BS	Solution B 2 CT on BC & 2 CT on each BS	Solution C 1 CT on BC & 2 CT on each BS	Solution D 2 CT on BC & 1 CT on each BS
Solution 1	✓	×	✓	×
Solution 1a	×	✓	×	✓
Solution 2	✓	×	×	✓
Solution 2a	×	✓	✓	×
Number of peripheral units required	n + 4	n + 8	n + 7	n + 5
If bypass facilities are to be included				
Using solution 3	✓	×	✓	×
Using solution 3a	×	✓	×	✓
Number of peripheral units required	n + 5	n + 10	n + 8	n + 8
If a second bus coupler is added i.e. one bus coupler either side of the bus section and no bypass facilities				
Using solution 1 for the 2nd coupler	✓	×	✓	×
Using solution 1a for the 2nd coupler	×	✓	×	✓
Number of peripheral units required	n + 5	n + 10	n + 8	n + 7
If a second bus coupler is added i.e. one bus coupler either side of the bus section and bypass facilities are included				
Using solution 3	✓	×	✓	×
Using solution 3a	×	✓	×	✓
Number of peripheral units required	n + 6	n + 12	n + 9	n + 10

The number of additional peripheral units depends on the number of bus section/bus coupler CTs. The type of peripheral unit used for each bay will depend on the i/o requirements of the bay in question.

12. APPLICATION OF NON PROTECTION FUNCTIONS

The non-protection features for the scheme are summarized below:

- Scheme can be centralised/distributed - if space is not available to locate the busbar protection centrally it is possible to decentralise the scheme and locate the units within other protection cubicles
- Local, zone and scheme measurements - various measurements are available locally via the relay LCD or remotely via the serial communication link
- Event, fault and disturbance recording - Comprehensive post fault analysis available via event lists, disturbance records and fault records which can be accessed locally via the relay LCD or remotely via the serial communication link (PU -> CU)
- Real time clock/time synchronisation - Time synchronization available via IRIG-B input (option in Central Unit that synchronises the PUs)
- Four settings groups - Independent remotely selectable setting groups to allow for customer specific applications
- CB and isolator state monitoring - indication of the circuit breaker/isolator position via the auxiliary contacts, scheme acts accordingly should discrepancy conditions be detected
- CB control - available locally via the HMI
- Commissioning test facilities
- Continuous self-monitoring - extensive self-checking routines to ensure maximum reliability
- Communications supervision - detects communication failure between units and enables remedial action to be taken e.g. switch to communication independent backup protection locally and disregard feeder at a zone level
- Graphical programmable scheme logic - allowing user defined protection and control logic to be tailored to the specific application

12.1 Function Keys

The following default PSL logic illustrates the programming of function keys to enable/disable the commissioning mode functionality.

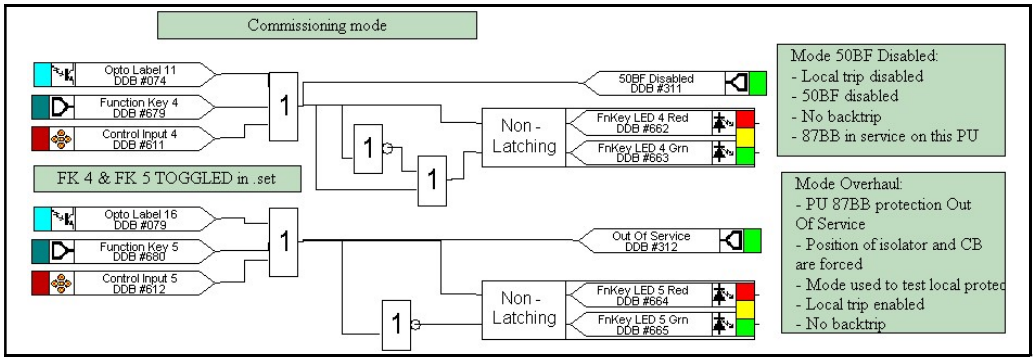

Figure 48: Commissioning Mode Default PSL

Note: Energizing two inputs to an LED conditioner creates a YELLOW illumination.

Function Keys 4 and 5 are set to 'Toggle' mode and on activation of the key, the commissioning mode will be in service if the function has been enabled in the "Configuration" menu. The associated LED will indicate the state of the protection function in service as GREEN and YELLOW for the 50BF disable mode and RED for the Overhaul mode.

13. CT REQUIREMENTS

13.1 Notation

I_F max fault	Maximum fault current (same for all feeders) in A
I_F max int cont	Maximum contribution from a feeder to an internal fault (depends on the feeder) in A
I_{np}	CT primary rated current
I_n	Nominal secondary current (1A or 5A)
R_{CT}	CT secondary winding Resistance in Ohms
R_B	Total external load resistance in Ohms
V_k	CT knee point voltage in Volts
S_{VA}	Nominal output in VA
K_{SSC}	Short-circuit current coefficient (generally 20)

General recommendations for the specification of protection CTs use common rules of engineering which are not directly related to a particular protection.

13.2 87BB Phase CT Requirements

13.2.1 Feeders Connected to Sources of Significant Power (Lines and Generators)

The primary rated current is specified above a 1/20th of the maximum contribution of the feeder to internal faults.

i.e. $I_{np} = I_F$ max int/20

E.g. A power line likely to import electricity at 20 kA gives rated primary current I_{np} as 1000 A.

This recommendation is used for most line or transformer protection applications.

The CT must be sized so as not to saturate during internal faults:

For each CT, $I_{FeederMax}$ = maximum contribution of the feeder to an internal fault (could be different for each feeder):

$$\mathbf{Vk > I_{FeederMax} * (R_{CT} + R_B)}$$

Note: This specification is valid for internal faults.

13.2.2 Out of Service Feeders or those with Low Power Contribution (Low Infeed)

Due to CT construction, thermal behaviour, and electrodynamics the CT primary rated current cannot be as low as required compared to the maximum fault current. In the case of a CT with primary bushings and not wound there is not a precise limit but a practical one. The primary rated current could not be lower than the 1/200th of the maximum short-circuit current crossing the CT at the time of an external fault

i.e. $I_{np} = I_F$ max /200

This is possible using the fast overcurrent detection I>2 to distinguish between an internal or external fault in case of CT saturation below than 2 ms

For example, for a substation whose maximum short-circuit current would be 30 kA, the CTs on the least powerful feeders are to be specified for a rated primary current I_{np} = 150 A, even if the normal consumption of the feeder is much lower than this value (Substation transformer feeder)

13.2.3 CT Specification according to IEC 185, 44-6 and BS 3938 (British Standard)

1. Class X according to British Standard: Minimum knee point voltage for saturation

   V_k min = 0.5 x secondary I_F max x (R_{CT} + R_B)

   Note: This specification is valid for external faults.

   The recommended specification makes it possible to guarantee a time to saturation greater than 1.4 ms with a remnant flux of 80 % of maximum flux (class X or TPX). This provides a sufficient margin of security for CT saturation detection, which operates in less than 2 ms.

2. Class 5P to IEC 185. Conversion of class X (BS) with the 5P equivalent (IEC)

3. Class TPX and TPY according to IEC 44-6. IEC defines a composite error as a percentage of a multiple of the rated current (I_N) on a definite load SVA.

   e.g. CT 1000/5 A - 50VA 5P 20 [CT I_{np}/I_nA - SVA Accuracy P Kscc]

This definition indicates that the composite error must be lower than 5%, for a primary current of $20I_{np}$ when the external load is equal to 2 ohms (50VA to I_n). If secondary resistance, R_{CT}, is known it is easy to calculate the magnetising EMF developed with the fault current ($20I_n$). If the error is 5% (= 5A) with this EMF, the point of operation is beyond the knee point voltage for saturation. By convention one admits that the knee point voltage, V_k, is 80% of this value. For a conversion between a class 5P (IEC) and a class X (BS) CT one uses the relation:

$$V_k=0.8 \text{ X } [(SVA \text{ x } K_{ssc})/I_n + (R_{CT} \text{ x } K_{ssc} \text{ x } I_n)]$$

$$SVA = (I_n \text{ x } V_k/0.8\ K_{ssc}) - R_{CT} \text{ x } I_n^2$$

In some cases, the calculation could reveal values too low to correspond to industrial standards. In this case the minima will be: SVA min = 10 VA 5P 20 which corresponds to a knee point voltage of approximately V_{kmin} = 70 V at 5A or 350V at 1A. Class TPY would permit lower values of power, (demagnetization air gap). Taking into account the weak requirements of class X or TPX one can keep specifications common.

For accuracy, class X or class 5P current transformers (CTs) are strongly recommended. The knee point voltage of the CTs should comply with the minimum requirements of the formulae shown below.

$V_k \geq k (R_{CT} + R_B)$

Where:

V_k = Required knee point voltage

k = Dimensioning factor

R_{CT} = CT secondary resistance

R_L = Circuit resistance from CT to relay

R_B = Burden resistance

k is a constant depending on:

If = Maximum value of through fault current for stability (multiple of In)

X/R = Primary system X/R ratio (for the P74x system, X/R up to 80)

The following CT requirement can be developed for the P74x scheme

$V_k \geq 0.5$ x (secondary If max) x (R_{CT} + R_B)

With $R_B = 2 R_L$

13.3 87BB Sensitive Differential Earth Fault CT Requirements

The Sensitive Differential Earth Fault (SDEF) is enabled only on High Impedance Earthed Networks.

To enable the SDEF the CTs must comply with the additional following requirement:

V_k min = 1.5 x X/R x I_n x (R_{CT} + R_B)

Note: If the X/R is lower than 20, chose 20 as X/R.

Where:

V_k = Required knee point voltage

X/R = Primary system X/R ratio (for the P74x system, X/R up to 80)

I_n = nominal secondary current (1A or 5A)

R_{CT} = CT secondary resistance

R_B = Burden resistance (with R_B = 2 R_L)

13.4 Support of IEEE C Class CTs

Px40 series protection is compatible with ANSI/IEEE current transformers as specified in the IEEE C57.13 standard. The applicable class for protection is class "C", which specifies a non air-gapped core. The CT design is identical to IEC class P, or British Standard class X, but the rating is specified differently. The following table allows C57.13 ratings to be translated into an IEC/BS knee point voltage.

CT Ratio	RCT (Ohm)	IEEE C57.13 – "C" Classification (Volts)				
		C50	C100	C200	C400	C800
100/5	0.04	56.5	109	214	424	844
200/5	0.8	60.5	113	218	428	848
400/5	0.16	68.5	121	226	436	856
800/5	0.32	84.5	137	242	452	872
1000/5	0.4	92.5	145	250	460	880
1500/5	0.6	112.5	165	270	480	900
2000/5	0.8	132.5	185	290	500	920
3000/5	1.2	172.5	225	330	540	960

Table 1: IEC/BS Knee Point Voltage V_K Offered by "C" Class CTS

Assumptions:

1. For 5A CTs, the typical resistance is 0.0004 ohm secondary per primary turn (for 1A CTs, the typical resistance is 0.0025 ohm secondary per primary turn)

2. IEC/BS knee is typically 5% higher than ANSI/IEEE knee

Given:

1. IEC/BS knee is specified as an internal EMF, whereas the "C" class voltage is specified at the CT output terminals. To convert from ANSI/IEEE to IEC/BS requires the voltage drop across the CTs secondary winding resistance to be added.

2. IEEE CTs are always rated at 5A secondary

3. The rated dynamic current output of a "C" class CT (Kssc) is always 20 x I_n

   V_k = (C x 1.05) + (I_n. R_{CT}. Kssc)

Where:

V_k = Equivalent IEC or BS knee point voltage

C = C Rating

I_n = 5A

R_{CT} = CT secondary winding resistance

Kssc = 20 times

14. AUXILIARY SUPPLY FUSE RATING

In the Safety Section of this manual, the maximum allowable fuse rating of 16A is quoted. To allow time grading with fuses upstream, a lower fuselink current rating is often preferable. Use of standard ratings of between 6A and 16A is recommended. Low voltage fuselinks, rated at 250V minimum and compliant with IEC60269-2 general application type gG are acceptable, with high rupturing capacity. This gives equivalent characteristics to HRC "red spot" fuses type NIT/TIA often specified historically.

The table below recommends advisory limits on relays connected per fused spur. This applies to Px40 series devices with hardware **suffix C and higher,** as these have inrush current limitation on switch-on, to conserve the fuse-link.

Maximum Number of Px40 Relays Recommended Per Fuse				
Battery Nominal Voltage	**6A**	**10A Fuse**	**15 or 16A Fuse**	**Fuse Rating > 16A**
24 to 54V	2	4	6	Not permitted
60 to 125V	4	8	12	Not permitted
138 to 250V	6	10	16	Not permitted

Alternatively, miniature circuit breakers (MCB) may be used to protect the auxiliary supply circuits.

PROGRAMMABLE LOGIC

CONTENTS

1.	**PROGRAMMABLE EDITOR**	**3**
1.1	Overview	3
1.2	Loading Schemes from Files	3
1.3	How to use Px40 PSL Editor	3
1.4	Warnings	3
2.	**PSL EDITOR TOOLBAR**	**5**
2.1	Logic Symbols	5
3.	**LOGIC SIGNALS PROPERTIES**	**7**
3.1	Link Properties	7
3.2	Opto Signal Properties	7
3.3	Input Signal Properties	7
3.4	Output Signal Properties	8
3.5	GOOSE Input Signal Properties	8
3.6	GOOSE Output Signal Properties	8
3.7	Control In Signal Properties	8
3.8	InterMiCOM In Command Properties	8
3.9	InterMiCOM Out Command Properties	9
3.10	Function Key Properties	9
3.11	Fault Recorder Trigger Properties	9
3.12	LED Signal Properties	9
3.13	Contact Signal Properties	9
3.14	LED Conditioner Properties	9
3.15	Contact Conditioner Properties	10
3.16	Timer Properties	10
3.17	Gate Properties	10
3.18	Off-Page Connector Properties	12
3.19	P742 Logic Nodes	18
3.20	P743 Logic Nodes	24
3.21	Default PSL	31
3.22	Logic Input Mapping	31
3.23	Relay Output Contact Mapping	32
3.24	Function Key Input Mapping	33
3.25	Programmable LED Output Mapping	34
3.26	Fault Recorder Start Mapping	36

3.27 PSL Scheme Version Control 36

4. VIEWING AND PRINTING PSL DIAGRAMS 38

1. PROGRAMMABLE EDITOR

1.1 Overview

The Programmable Scheme Logic (PSL) is a module of programmable logic gates and timers in the IED, which can be used to create customized internal logic. This is done by combining the IED's digital inputs with internally generated digital signals using logic gates and timers, then mapping the resultant signals to the IED's digital outputs and LEDs.

The Programmable Scheme Logic (PSL) Editor allows you to create and edit scheme logic diagrams to suit your own application.

1.2 Loading Schemes from Files

The product is shipped with default scheme files. These can be used as a starting point for changes to a scheme. To create a new blank scheme, select **File** then **New** then **'Blank scheme...** to open the default file for the appropriate IED. This deletes the diagram components from the default file to leave an empty diagram but with the correct configuration information loaded.

1.3 How to use Px40 PSL Editor

With the Px40 PSL Module you can:

- Start a new PSL diagram
- Extract a PSL file from a Px40 IED
- Open a diagram from a PSL file
- Add logic components to a PSL file
- Move components in a PSL file
- Edit link of a PSL file
- Add link to a PSL file
- Highlight path in a PSL file
- Use a conditioner output to control logic
- Download PSL file to a Px40 IED
- Print PSL files

For a detailed discussion on how to use these functions, please refer to the S1 Agile manual.

1.4 Warnings

Checks are made before a scheme is downloaded to the relay. Various warning messages may be displayed as a result of these checks.

In most cases, the model number of the unit will match that of the model number stored in the PSL software on the PC. The Editor first reads in the model number of the connected unit, then compares it with its stored model number using a "wildcard" comparison. If a model mismatch occurs, a warning is generated before sending starts. Both the stored model number and the number read from the IED are displayed with the warning.

It is up to the user to decide whether the settings to be downloaded are compatible, and to be aware that incompatible settings could lead to undesirable behavior of the unit.

If there are any potential problems of an obvious nature, then a list will be generated. The types of potential problems that the program attempts to detect are:

- One or more gates, LED signals, contact signals, and/or timers have their outputs linked directly back to their inputs. An erroneous link of this sort could lock up the relay or cause other more subtle problems to arise.
- Inputs to Trigger (ITT) exceeds the number of inputs. A programmable gate has its ITT value set to greater than the number of actual inputs; the gate can never activate. Note that there is no lower ITT value check. A 0-value does not generate a warning.
- Too many gates. There is a theoretical upper limit of 256 gates in a scheme, but the practical limit is determined by the complexity of the logic. In practice the scheme would have to be very complex, and this error is unlikely to occur.
- Too many links. There is no fixed upper limit to the number of links in a scheme. However, as with the maximum number of gates, the practical limit is determined by the complexity of the logic. In practice the scheme would have to be very complex, and this error is unlikely to occur.

2. PSL EDITOR TOOLBAR

There are several toolbars available for easy navigation and editing of PSL.

Toolbar	Description
	Standard tools: For file management and printing
	Alignment tools: To snap logic elements into horizontally or vertically aligned groupings
	Drawing tools: To add text comments and other annotations, for easier reading of PSL schemes
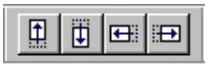	Nudge tools: To move logic elements
	Rotation tools: Tools to spin, mirror and flip
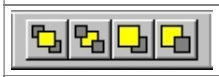	Structure tools: To change the stacking order of logic components
	Zoom and pan tools: For scaling the displayed screen size, viewing the entire PSL, or zooming to a selection

2.1 Logic Symbols

The logic symbol toolbar provides icons to place each type of logic element into the scheme diagram. Not all elements are available in all devices. Icons will only be displayed for those elements available in the selected device.

Symbol	Function	Explanation
	Link	Create a link between two logic symbols
	Opto Signal	Create an opto signal
	Input Signal	Create an input signal
	Output Signal	Create an output signal
	GOOSE In	Create an input signal to logic to receive a GOOSE message transmitted from another IED. Used in either UCA2.0 or IEC 61850 GOOSE applications only
	GOOSE Out	Create an output signal from logic to transmit a GOOSE message to another IED. Used in either UCA2.0 or IEC 61850 GOOSE applications only.
	Control In	Create an input signal to logic that can be operated from an external command.
	InterMiCOM In	Create an input signal to logic to receive an InterMiCOM command transmitted from another IED.
	InterMiCOM Out	Create an output signal from logic to transmit an InterMiCOM command to another IED.
	Off-page left	Create an output Off-page connector for the off page right connector
	Off-page right	Create an input Off-page connector to replicate elsewhere in the diagram
	Function Key	Create a function key input signal.
	Trigger Signal	Create a fault record trigger
	LED Signal	Create an LED input signal that repeats the status of tri-color LED

Symbol	Function	Explanation
	Contact Signal	Create a contact signal
	LED Conditioner	Create an LED conditioner
	Contact Conditioner	Create a contact conditioner
	Timer	Create a timer
	AND Gate	Create an AND Gate
	OR Gate	Create an OR Gate
	Programmable Gate	Create a programmable gate
	SR latch	Create an SR late gate
	Counter	Gate that can add pulses to a configurable threshold

3. LOGIC SIGNALS PROPERTIES

1. Use the logic toolbar to select logic signals. This is enabled by default but to hide or show it, select **View** then **Logic Toolbar**.
2. Zoom in or out of a logic diagram using the toolbar icon or select **View** then **Zoom Percent**.
3. Right-click any logic signal and a context-sensitive menu appears.

Certain logic elements show the **Properties** option. If you select this, a **Component Properties** window appears. The contents of this window and the signals listed will vary according to the logic symbol selected. The actual DDB numbers are dependent on the model and are provided in the DDB signals table.

3.1 Link Properties

Links form the logical link between the output of a signal, gate or condition and the input to any element. Any, which is connected to the input of a gate, can be inverted. To do this:

1. Right-click the input
2. Select **Properties….** The Link Properties window appears.
3. Check the box to invert the link. Or uncheck for a non-inverted link

An inverted link is shown with a small circle on the input to a gate. A link must be connected to the input of a gate to be inverted.

Links can only be started from the output of a signal, gate, or conditioner, and must end at an input to any element.

Signals can only be an input or an output. To follow the convention for gates and conditioners, input signals are connected from the left and output signals to the right. The Editor automatically enforces this convention.

A link is refused for the following reasons:

- There has been an attempt to connect to a signal that is already driven. The reason for the refusal may not be obvious because the signal symbol may appear elsewhere in the diagram. In this case you can right-click the link and select Highlight to find the other signal. Click anywhere on the diagram to disable the highlight.
- An attempt has been made to repeat a link between two symbols. The reason for the refusal may not be obvious because the existing link may be represented elsewhere in the diagram.

3.2 Opto Signal Properties

Each opto input can be selected and used for programming in PSL. Activation of the opto input will drive an associated DDB signal.

For example, activating opto input L1 will assert DDB 032 in the PSL.

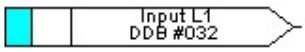

3.3 Input Signal Properties

Relay logic functions provide logic output signals that can be used for programming in PSL. Depending on the relay functionality, operation of an active relay function will drive an associated DDB signal in PSL.

For example, DDB 261 will be asserted in the PSL should the active earth fault 1, stage 1 protection operate/trip.

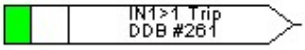

3.4 Output Signal Properties

Relay logic functions provide logic input signals that can be used for programming in PSL. Depending on the relay functionality, activation of the output signal will drive an associated DDB signal in PSL and cause an associated response to the relay function

For example, if DDB 216 is asserted in the PSL, it will block the sensitive earth function stage 1 timer.

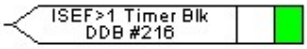

3.5 GOOSE Input Signal Properties

The Programmable Scheme Logic interfaces with the GOOSE Scheme Logic (see S1 user's manual) by means of 32 Virtual inputs. The Virtual Inputs can be used in much the same way as the Opto Input signals.

The logic that drives each of the Virtual Inputs is contained within the relay's GOOSE Scheme Logic file. It is possible to map any number of bit-pairs, from any subscribed device, using logic gates onto a Virtual Input (see S1 User's manual for more details).

For example, DDB 832 will be asserted in PSL should virtual input 1 operate.

3.6 GOOSE Output Signal Properties

The Programmable Scheme Logic interfaces with the GOOSE Scheme Logic by means of 32 Virtual outputs.

It is possible to map virtual outputs to bit-pairs for transmitting to any subscribed devices (see S1 User's manual for more details).

For example, if DDB 865 is asserted in PSL, Virtual Output 32 and its associated mappings will operate.

3.7 Control In Signal Properties

There are 32 control inputs which can be activated via the relay menu, 'hotkeys' or via rear communications. Depending on the programmed setting i.e. latched or pulsed, an associated DDB signal will be activated in PSL when a control input is operated.

For example, operate control input 1 to assert DDB 800 in the PSL.

3.8 InterMiCOM In Command Properties

There are 8 EIA(RS)232 InterMiCOM inputs that could be selected and used for teleprotection. 'InterMiCOM In' is a received signal from remote end that could be mapped to selected output relay or logic input.

For example, InterMiCOM Input 1 is mapped to output relay 1.

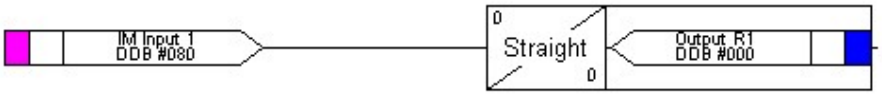

3.9 InterMiCOM Out Command Properties

There are 8 EIA(RS)232 InterMiCOM outputs that could be selected and used for teleprotection. 'InterMiCOM Out' is a send command to a remote end that could be mapped to any logic output or opto input. This signal will be transmitted to the remote end using protection communication and will appear at the remote end as corresponding 'InterMiCOM In' command.

For example, InterMiCOM Output 1 is mapped to opto input 4.

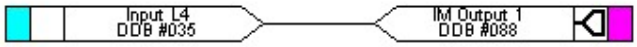

3.10 Function Key Properties

Each function key can be selected and used for programming in PSL. Activation of the function key will drive an associated DDB signal and the DDB signal will remain active depending on the programmed setting i.e. toggled or normal. Toggled mode means the DDB signal will remain latched or unlatched on key press and normal means the DDB will only be active for the duration of the key press.

For example, operate function key 1 to assert DDB 712 in the PSL.

3.11 Fault Recorder Trigger Properties

The fault recording facility can be activated, by driving the fault recorder trigger DDB signal.

For example, assert DDB 144 to activate the fault recording in the PSL.

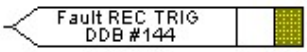

3.12 LED Signal Properties

All programmable LEDs will drive associated DDB signal when the LED is activated.

For example, DDB 652 will be asserted when LED 7 is activated.

3.13 Contact Signal Properties

All relay output contacts will drive associated DDB signal when the output contact is activated.

For example, DDB 009 will be asserted when output R10 is activated.

3.14 LED Conditioner Properties

1. Select the LED name from the list (only shown when inserting a new symbol).
2. Configure the LED output to be Red, Yellow or Green.
3. Configure a Green LED by driving the Green DDB input.
4. Configure a RED LED by driving the RED DDB input.
5. Configure a Yellow LED by driving the RED and GREEN DDB inputs simultaneously.
6. Configure the LED output to be latching or non-latching.

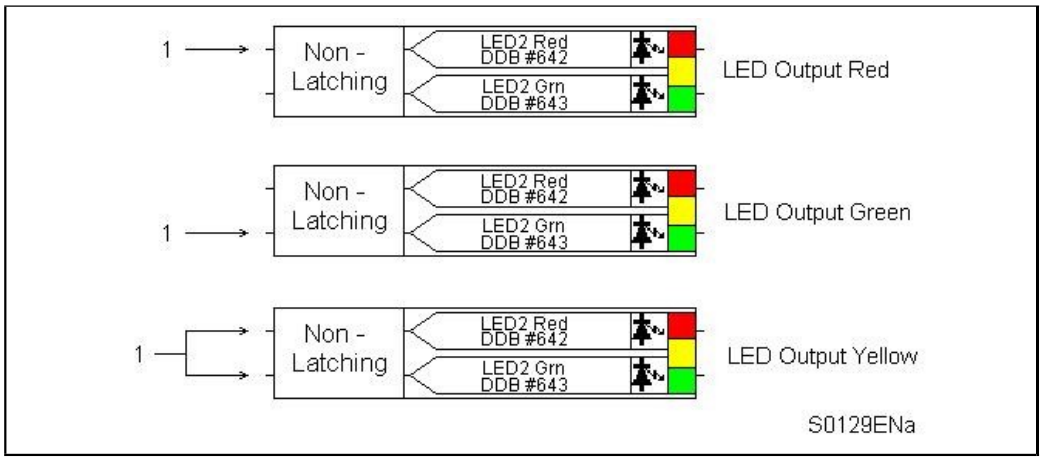

3.15 Contact Conditioner Properties

Each contact can be conditioned with an associated timer that can be selected for pick up, drop off, dwell, pulse, pick-up/drop-off, straight-through, or latching operation.

Straight-through means it is not conditioned in any way whereas **Latching** is used to create a sealed-in or lockout type function.

To set contact properties,

1. Select the contact name from the Contact Name list (only shown when inserting a new symbol).
2. Choose the conditioner type required in the Mode tick list.
3. Set the Pick-up Value (in milliseconds), if required.
4. Set the Drop-off Value (in milliseconds), if required.

3.16 Timer Properties

Each timer can be selected for pick up, drop off, dwell, pulse or pick-up/drop-off operation.

1. From the **Timer Mode** tick list, choose the mode.
2. Set the **Pick-up Value** (in milliseconds), if required.
3. Set the **Drop-off Value** (in milliseconds), if required.
4. From the **Available timers** list (not in all products), choose the required timer.

   Note: The timer number will auto-increment when adding timers.
5. Click **OK**.

3.17 Gate Properties

1. An **AND Gate** requires that all inputs are TRUE for the output to be TRUE.
2. An **OR Gate** requires that one or more input is TRUE for the output to be TRUE.
3. A **Programmable Gate** requires that the number of inputs that are TRUE is equal to or greater than its **Inputs to Trigger** setting for the output to be TRUE.

To set gate properties,

1. Select the gate type: **AND Gate**, **OR Gate**, or **Programmable Gate**.
2. If you select **Programmable Gate**, set the number of **Inputs to Trigger**.
3. If you want the output of the gate to be inverted, check the **Invert Output** check box. An inverted output appears as a "bubble" on the gate output.
4. Click **OK**

A Gate may be an AND, OR, programmable gate or SR Latch.

Three variants of the SR latch gate are available. They are:

- Standard - no input dominant
- Set Input Dominant
- Reset Input Dominant

The output of the gate, Q is latched, i.e. its state is non-volatile upon power cycle.

The inversions of the input and output signals are supported.

The state of Q is reset when a new PSL is downloaded to the relay or when the active setting group is changed. The maximum number of SR Latch gates is 64.

The evaluation of the Q state is carried out after all the DDB changes have completed, i.e. at the end of the protection cycle and synchronised with protection task. Hence there is an inherent delay of a protection cycle in processing every one of the SR gates and the delay increases if the SR gates are connected one after another.

The user must be aware that if there is a timer before the SR gate, then an additional delay of a protection cycle will be incurred before the Q state is changed.

The logic operations of the three variants of the gate are depicted in the diagram below:

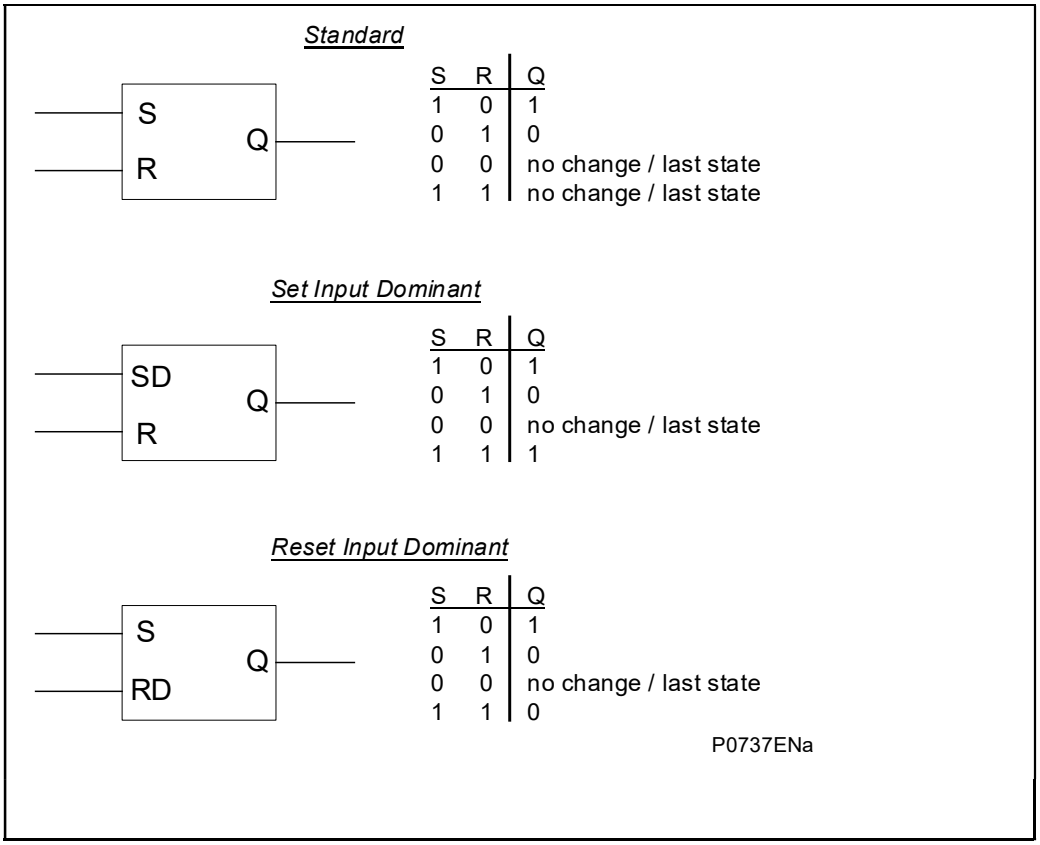

Select the Gate type AND, OR, or Programmable.

Set the number of inputs to trigger when Programmable is selected.

Select if the output of the gate should be inverted using the Invert Output check box. An inverted output is indicated with a "bubble" on the gate output.

3.18 Off-Page Connector Properties

The PSL Editor includes two additional connector buttons on the Logic Toolbar.

Off-page connectors, also known as variables, allow the visual scheme logic to be displayed without the links breaking over multiple pages. As a result, this makes viewing printed schemes much easier.

Details on how to use Off-page connectors, along with examples, can be found in the latest Settings Application Software user guide P40-M&CR-SAS-UG-EN-n.

P741 Logic Nodes

Relay	DDB No.	English Text	Type	Source	Description
P741	0	Relay Label 01	RELAY	Output Conditioner	Output Relay 01
P741	15	Relay Label 16	RELAY	Output Conditioner	Output Relay 16
P741	64	Opto Label 01	OPTO	Opto Input	Opto Input 1
P741	71	Opto Label 08	OPTO	Opto Input	Opto Input 8
P741	104	SG Bit LSB	PSL Output Signal	PSL	Setting Group Selector X1 (low bit) SG1 is active DDB 104=0 & DDB 105=0 SG2 is active DDB 104=1 & DDB 105=0
P741	105	SG Bit MSB	PSL Output Signal	PSL Input signal	Setting Group Selector 1X (high bit) SG3 is active DDB 104=0 & DDB 105=1 SG4 is active DDB 104=1 & DDB 105=1
P741	106	To Reset CircFlt	PSL Output Signal	PSL	To Reset the Circuitry Fault
P741	107	Ext Start DR	PSL Output Signal	PSL	Starting Disturbance Recorder
P741	108	To Block 87BB	PSL Output Signal	PSL	To Block 87BB phase & Earth algorithms
P741	109	Reset Latches	PSL Output Signal	PSL	Reset all indications (Led and relays latched in PSL) that includes the Led Alarm
P741	110	To Reset PU err	PSL Output Signal	PSL	To reset PU error
P741	111	All Prot Blocked	PSL Output Signal	PSL (Commissioning)	To disable all the protections (CU & PU)
P741	112	Virtual Relay 01	PSL Output Signal	PSL	Virtual Signal 01 from the CU to all the PUs via the fibre optic
P741	127	Virtual Relay 16	PSL Output Signal	PSL	Virtual Signal 16 from the CU to all the PUs via the fibre optic
P741	135	Fibre Com Error	PSL Input Signal	Scheme Integrity	Communication error to at least 1 PU
P741	136	User Alarm 1	PSL Output Signal	PSL	Triggers User Alarm 1 message to be alarmed on LCD display (self-resetting)
P741	143	User Alarm 8	PSL Output Signal	PSL	Triggers User Alarm 8 message to be alarmed on LCD display (self-resetting)
P741	144	PU Error Lck z8	PSL Input Signal	Scheme Integrity	PU error blocking of zone 8
P741	151	PU Error Lck z1	PSL Input Signal	Scheme Integrity	PU error blocking of zone 1
P741	152	PU Error Alm z8	PSL Input Signal	Scheme Integrity	PU error alarm in zone 8
P741	159	PU Error Alm z1	PSL Input Signal	Scheme Integrity	PU error alarm in zone 1
P741	160	Circt Flt Lck z8	PSL Input Signal	87BB Busbar Protection	Circuitry fault blocking of zone 8
P741	167	Circt Flt Lck z1	PSL Input Signal	87BB Busbar Protection	Circuitry fault blocking of zone 1
P741	168	Circt Flt Alm z8	PSL Input Signal	87BB Busbar Protection	Circuitry fault alarm in zone 8
P741	175	Circt Flt Alm z1	PSL Input Signal	87BB Busbar Protection	Circuitry fault alarm in zone 1
P741	176	Flt 87BB Zone 8	PSL Input Signal	87BB Busbar Protection	Differential fault current in zone 8
P741	183	Flt 87BB Zone 1	PSL Input Signal	87BB Busbar Protection	Differential fault current in zone 1
P741	184	Trp 87BB Zone 8	PSL Input Signal	87BB Busbar Protection	Busbar trip of zone 8
P741	191	Trp 87BB Zone 1	PSL Input Signal	87BB Busbar Protection	Busbar trip of zone 1
P741	192	Man.Trip Zone 8	PSL Input Signal	Commissioning	Manual trip of zone 8
P741	199	Man.Trip Zone 1	PSL Input Signal	Commissioning	Manual trip of zone 1

Relay	DDB No.	English Text	Type	Source	Description
P741	200	Trp 50BF Zone 8	PSL Input Signal	50BF Backtrip protection	Breaker failure trip (50BF) of zone 8
P741	207	Trp 50BF Zone 1	PSL Input Signal	50BF Backtrip protection	Breaker failure trip (50BF) of zone 1
P741	208	INP block SEF z8	PSL Output Signal	PSL (87BB SEF Busbar Protection)	87BB SEF protection algorithm blocking of zone 8 opto input
P741	215	INP block SEF z1	PSL Output Signal	PSL (87BB SEF Busbar Protection)	87BB SEF protection algorithm blocking of zone 1 opto input
P741	216	Ext Trip 50BF z8	PSL Output Signal	PSL (50BF Backtrip protection)	External Breaker failure trip order (50BF) of zone 8 opto input
P741	223	Ext Trip 50BF z1	PSL Output Signal	PSL (50BF Backtrip protection)	External Breaker failure trip order (50BF) of zone 1 opto input
P741	224	INP Lck Lev.1 z8	PSL Output Signal	PSL (Commissioning)	Maintenance Mode 1 (87BB monitoring) of zone 8 opto input
P741	231	INP Lck Lev.1 z1	PSL Output Signal	PSL (Commissioning)	Maintenance Mode 1 (87BB monitoring) of zone 1 opto input
P741	232	INP Lck Lev.2 z8	PSL Output Signal	PSL (Commissioning)	Maintenance Mode 2 (50BF & 87BB blocked) of zone 8 opto input
P741	239	INP Lck Lev.2 z1	PSL Output Signal	PSL (Commissioning)	Maintenance Mode 2 (50BF & 87BB blocked) of zone 1 opto input
P741	240	Lck Lev.1 Zone 8	PSL Input Signal	Scheme Integrity	Commissioning mode 1: 50BF disabled in zone 8
P741	247	Lck Lev.1 Zone 1	PSL Input Signal	Scheme Integrity	Commissioning mode 1: 50BF disabled in zone 1
P741	248	Lck Lev.2 Zone 8	PSL Input Signal	Scheme Integrity	Commissioning mode 2: 87BB & 50BF disabled in zone 8
P741	255	Lck Lev.2 Zone 1	PSL Input Signal	Scheme Integrity	Commissioning mode 2: 87BB & 50BF disabled in zone 1
P741	256	Trip 87BB	PSL Input Signal	87BB Busbar Protection	Busbar trip order (87BB) Logical OR of DDB 184 to 191
P741	257	Trip 87BB Locked	PSL Input Signal	Scheme Integrity	Busbar trip order blocked by commissioning mode or Circuitry fault
P741	258	Trip Manual zone	PSL Input Signal	Commissioning	Manual Trip Order Logical OR of DDB 192 to 199
P741	259	Trip 50BF	PSL Input Signal	50BF Backtrip protection	Breaker fail trip order (50BF) Logical OR of DDB 200 to 207
P741	260	Trip 50BF block	PSL Input Signal	Scheme Integrity	Breaker fail trip order blocked by commissioning mode or Circuitry fault
P741	261	Ext Trip 50BF	PSL Input Signal	50BF Backtrip protection	50BF backtrip request by opto input Logical OR of DDB 216 to 223
P741	262	Fault phase A	PSL Input Signal	87BB Busbar Protection	Differential fault current in phase A
P741	263	Fault phase B	PSL Input Signal	87BB Busbar Protection	Differential fault current in phase B
P741	264	Fault phase C	PSL Input Signal	87BB Busbar Protection	Differential fault current in phase C
P741	265	Earth Fault	PSL Input Signal	87BB Busbar Protection	Differential sensitive earth fault current
P741	266	Circuitry Fault	PSL Input Signal	Scheme Integrity	Circuitry fault Alarm on 1 or several zones Logical OR of DDB 168 to 175
P741	267	Alm Lck Level 1	PSL Input Signal	Scheme Integrity	Commissioning mode 1: 87BB monitoring Logical OR of DDB 224 to 231
P741	268	Alm Lck Level 2	PSL Input Signal	Scheme Integrity	Commissioning mode 2: 87BB & 50BF disabled Logical OR of DDB 232 to 239
P741	269	Config. valid	PSL Input Signal	Scheme Integrity	Valid Setting configuration
P741	270	Topology valid	PSL Input Signal	Scheme Integrity	Valid Topology file
P741	271	87BB 3Ph Blocked	PSL Input Signal	Scheme Integrity	87BB alarm blocked by opto input (or between the 8 inputs “INP block 3ph” z1 to z8)
P741	272	Fibre Com Worn	PSL Input Signal	Relay Integrity	Warning: fibre communication to be changed
P741	275	Fault Check Zone	PSL Input Signal	87BB Busbar Protection	Differential fault detected by the Check Zone

Relay	DDB No.	English Text	Type	Source	Description
P741	276	Circt Flt ph A	PSL Input Signal	Scheme Integrity	Circuitry fault in phase A
P741	277	Circt Flt ph B	PSL Input Signal	Scheme Integrity	Circuitry fault in phase B
P741	278	Circt Flt ph C	PSL Input Signal	Scheme Integrity	Circuitry fault in phase C
P741	279	Circt Flt Earth	PSL Input Signal	Scheme Integrity	Circuitry fault on the neutral
P741	280	Circt Flt Block.	PSL Input Signal	Scheme Integrity	Circuitry fault blocking Zone x Logical OR of DDB 160 to 239
P741	281	PU Error	PSL Input Signal	Scheme Integrity	PU error Alarm in Zone x Logical OR of DDB 152 to 159
P741	282	PU Err. Blocking	PSL Input Signal	Scheme Integrity	PU error blocking Zone x Logical OR of DDB 144 to 151
P741	283	SEF Blocked	PSL Input Signal	87BB SEF Busbar Protection	87BB SEF blocked by opto input Logical OR of DDB 208 to 215
P741	284	CZ Circt Fault	PSL Input Signal	Scheme Integrity	Circuitry fault on the Check Zone
P741	285	CZ Blck Crct Flt	PSL Input Signal	Scheme Integrity	Circuitry fault blocking the Check Zone
P741	286	CZ PU Error	PSL Input Signal	Scheme Integrity	PU error Alarm in the Check Zone
P741	287	CZ Block PU Err.	PSL Input Signal	Scheme Integrity	PU error blocking the Check Zone
P741	288	Err Chan A Com 1	PSL Input Signal	Relay Integrity	PU communication error: channel 1 board A
P741	289	Err Chan B Com 1	PSL Input Signal	Relay Integrity	PU communication error: channel 1 board B
P741	290	Err Chan C Com 1	PSL Input Signal	Relay Integrity	PU communication error: channel 1 board C
P741	291	Err Chan D Com 1	PSL Input Signal	Relay Integrity	PU communication error: channel 1 board D
P741	292	Err Chan A Com 2	PSL Input Signal	Relay Integrity	PU communication error: channel 2 board A
P741	293	Err Chan B Com 2	PSL Input Signal	Relay Integrity	PU communication error: channel 2 board B
P741	294	Err Chan C Com 2	PSL Input Signal	Relay Integrity	PU communication error: channel 2 board C
P741	295	Err Chan D Com 2	PSL Input Signal	Relay Integrity	PU communication error: channel 2 board D
P741	296	Err Chan A Com 3	PSL Input Signal	Relay Integrity	PU communication error: channel 3 board A
P741	297	Err Chan B Com 3	PSL Input Signal	Relay Integrity	PU communication error: channel 3 board B
P741	298	Err Chan C Com 3	PSL Input Signal	Relay Integrity	PU communication error: channel 3 board C
P741	299	Err Chan D Com 3	PSL Input Signal	Relay Integrity	PU communication error: channel 3 board D
P741	300	Err Chan A Com 4	PSL Input Signal	Relay Integrity	PU communication error: channel 4 board A
P741	301	Err Chan B Com 4	PSL Input Signal	Relay Integrity	PU communication error: channel 4 board B
P741	302	Err Chan C Com 4	PSL Input Signal	Relay Integrity	PU communication error: channel 4 board C
P741	303	Err Chan D Com 4	PSL Input Signal	Relay Integrity	PU communication error: channel 4 board D
P741	304	Err Chan A Com 5	PSL Input Signal	Relay Integrity	PU communication error: channel 5 board A
P741	305	Err Chan B Com 5	PSL Input Signal	Relay Integrity	PU communication error: channel 5 board B
P741	306	Err Chan C Com 5	PSL Input Signal	Relay Integrity	PU communication error: channel 5 board C
P741	307	Err Chan D Com 5	PSL Input Signal	Relay Integrity	PU communication error: channel 5 board D
P741	308	Err Chan A Com 6	PSL Input Signal	Relay Integrity	PU communication error: channel 6 board A
P741	309	Err Chan B Com 6	PSL Input Signal	Relay Integrity	PU communication error: channel 6 board B
P741	310	Err Chan C Com 6	PSL Input Signal	Relay Integrity	PU communication error: channel 6 board C
P741	311	Err Chan D Com 6	PSL Input Signal	Relay Integrity	PU communication error: channel 6 board D
P741	312	Err Chan A Com 7	PSL Input Signal	Relay Integrity	PU communication error: channel 7 board A
P741	313	Err Chan B Com 7	PSL Input Signal	Relay Integrity	PU communication error: channel 7 board B
P741	314	Err Chan C Com 7	PSL Input Signal	Relay Integrity	PU communication error: channel 7 board C
P741	315	Err Chan D Com 7	PSL Input Signal	Relay Integrity	PU communication error: channel 7 board D
P741	324	PU Adr 34 error	PSL Input Signal	Scheme Integrity	Error: several PUs with address 34
P741	351	PU Adr 07 error	PSL Input Signal	Scheme Integrity	Error: several PUs with address 7
P741	355	Minor Err COM1	PSL Input Signal	Relay Integrity	Minor error in communication board A
P741	356	Minor Err COM2	PSL Input Signal	Relay Integrity	Minor error in communication board B
P741	357	Minor Err COM3	PSL Input Signal	Relay Integrity	Minor error in communication board C
P741	358	Minor Err COM4	PSL Input Signal	Relay Integrity	Minor error in communication board D
P741	359	Minor Err COM5	PSL Input Signal	Relay Integrity	Minor error in communication board E
P741	360	Minor Err COM6	PSL Input Signal	Relay Integrity	Minor error in communication board F
P741	361	Minor Err COM7	PSL Input Signal	Relay Integrity	Minor error in communication board G
P741	364	Config Valid.	PSL Input Signal	Scheme Integrity	Present configuration valid
P741	365	Config Error	PSL Input Signal	Scheme Integrity	Present configuration no correct
P741	366	87BB Instant Trip	PSL Input Signal	87BB Busbar Protection	Busbar Differential immediate Trip

Relay	DDB No.	English Text	Type	Source	Description
P741	367	87BB Delayed Trip	PSL Input Signal	87BB Busbar Protection	Busbar Differential delayed Trip
P741	368	Virtual Opto 01	PSL Input Signal	PSL	Virtual Signal 01 from the CU to the PU via the fibre optic
P741	383	Virtual Opto 16	PSL Input Signal	PSL	Virtual Signal 16 from the CU to the PU via the fibre optic
P741	384	Security Bypass	PSL Input Signal	Relay Integrity	Cyber Security Bypass is Enabled
P741	385	87BB Enabled	PSL Input Signal	87BB Busbar Protection	Busbar protection enable
P741	386	87BBN Enabled	PSL Input Signal	87BB SEF Busbar Protection	Busbar earth enable
P741	387	Circ Flt Reset	PSL Input Signal	Commissioning	Reset circuitry fault alarm and/or blocking
P741	388	Topo/Set Changed	PSL Input Signal	Group Selection	Change on topology or configuration
P741	389	Manual Start DR	PSL Input Signal	Commissioning	Disturbance recorder - Manual start
P741	390	PU Topo invalid	PSL Input Signal	Scheme Integrity	Topology file error for one or several PU
P741	391	PU Error Reset	PSL Input Signal	Scheme Integrity	Reset PU Error alarm and / or blocking
P741	392	87BB Blocked	PSL Input Signal	Scheme Integrity	87BB phase and earth algorithms blocked by opto input
P741	393	RP1 Read Only	PSL Output Signal	PSL	All setting changes and most command/control actions blocked for Rear Port 1.
P741	394	RP2 Read only	PSL Output Signal	PSL	All setting changes and most command/control actions blocked for Rear Port 2 (when option available)
P741	395	NIC Read Only	PSL Output Signal	PSL	All setting changes and most command/control actions blocked for the Ethernet port (when option available).
P741	397	Block Contacts	PSL Output Signal	PSL	Input DDB signal used to drive IED to be contacts blocked If the device has been put into 'Contact Blocked' mode using this input signal, then the Apply Test command will not execute. This is to prevent a device that has been blocked by an external process having its contacts operated by a local operator using the HMI. If the Block Contacts DDB is not set and the Apply Test command in is issued, the contacts will change state.
P741	398	Contacts Blocked	PSL Input Signal	PSL	Indicates contacts blocked mode enabled. Can be mapped in PSL and sent via InterMiCOM to block contacts at the remote end.
P741	399	General Alarm	PSL Input Signal	Scheme Integrity	General alarm
P741	400	INP Block 3Ph z8	PSL Output Signal	PSL	Logic opto input 87BB blocking the 3 phases in zone 8
P741	407	INP Block 3Ph z1	PSL Output Signal	PSL	Logic opto input 87BB blocking the 3 phases in zone 1
P741	416	87BB Ph Diff z8	PSL Input Signal	PSL	87BB fault detected in zone 8 by the phase differential element
P741	423	87BB Ph Diff z1	PSL Input Signal	PSL	87BB fault detected in zone 1 by the phase differential element
P741	424	87BB SEF Diff z8	PSL input Signal	PSL	87BB fault detected in zone 8 by the SEF differential element
P741	431	87BB SEF Diff z1	PSL Input Signal	PSL	87BB fault detected in zone 1 by the SEF differential element
P741	436	Timer in 1	TIMERIN	PSL	Input to auxiliary timer 1
P741	451	Timer in 16	TIMERIN	PSL	Input to auxiliary timer 16
P741	452	Timer out 1	TIMEROUT	PSL	Output from auxiliary timer 1
P741	467	Timer out 16	TIMEROUT	PSL	Output from auxiliary timer 1
P741	468	Fault_REC_TRIG	FRT	PSL	Trigger for the Fault Recorder
P741	469	Battery Fail	PSL Input Signal	Relay Integrity	Front panel Battery Failure
P741	470	Field Voltage Fail	PSL Input Signal	Relay Integrity	48V Field Voltage Failure
P741	471	Comm2 H/W FAIL	PSL Input Signal	Second rear port	Second rear port Alarm

Relay	DDB No.	English Text	Type	Source	Description
P741	472	GOOSE IED Absent	PSL Input Signal	IEC 61850	The IED is not subscribed to a publishing IED in the current scheme
P741	473	NIC Not Fitted	PSL Input Signal	IEC 61850	Ethernet board not fitted
P741	474	NIC No Response	PSL Input Signal	IEC 61850	Ethernet board not responding
P741	475	NIC Fatal Error	PSL Input Signal	IEC 61850	Ethernet board unrecoverable error
P741	476	NIC Soft. Reload	PSL Input Signal	IEC 61850	Ethernet card software reload Alarm
P741	477	Bad TCP/IP Cfg.	PSL Input Signal	IEC 61850	Bad TCP/IP configuration alarm
P741	478	Bad OSI Config.	PSL Input Signal	IEC 61850	Bad OSI configuration alarm
P741	479	NIC Link Fail	PSL Input Signal	IEC 61850	Ethernet link lost
P741	480	NIC SW Mis-Match	PSL Input Signal	IEC 61850	Ethernet board software not compatible with main CPU
P741	481	IP Addr Conflict	PSL Input Signal	IEC 61850	The IP address of the IED is already used by another IED
P741	482	IM Loopback	PSL Input Signal	InterMiCOM	InterMiCOM indication that Loopback testing is in progress
P741	483	IM Message Fail	PSL Input Signal	InterMiCOM	InterMiCOM Message Failure Alarm
P741	484	IM Data CD Fail	PSL Input Signal	InterMiCOM	InterMiCOM Data Channel Detect Fail
P741	485	IM Channel Fail	PSL Input Signal	InterMiCOM	InterMiCOM Channel Failure Alarm
P741	486	Backup Setting	PSL Input Signal	InterMiCOM	Backup setting Alarm This is an alarm that is ON if any setting fail during the setting changing process. If this happens, the relay will use the last known good setting.
P741	489	SNTP Failure	PSL Input Signal	SNTP Sync	SNTP Alarm
P741	490	NIC MemAllocFail	PSL Input Signal	IEC 61850	MMS libraries memory allocation fails.
P741	491	PTP Failure	PSL Input Signal	PTP Sync	PTP sync fail alarm
P741	494	BBRAM Failure	PSL Input Signal	Integrity Relay	BBRAM Verify Fail
P741	512	Virtual Output 1	GOOSEOUT	PSL	GOOSE Output 1 Allows user to control a binary signal which can be mapped via SCADA protocol output to other devices
P741	543	Virtual Output 32	GOOSEOUT	PSL	GOOSE Output 32 Allows user to control a binary signal which can be mapped via SCADA protocol output to other devices
P741	544	Timer In 17	TIMERIN	PSL	Input to Auxiliary Timer 17
P741	559	Timer In 32	TIMERIN	PSL	Input to Auxiliary Timer 32
P741	560	Timer Out 17	TIMEROUT	PSL	Output from Auxiliary Timer 17
P741	575	Timer Out 32	TIMEROUT	PSL	Output from Auxiliary Timer 32
P741	576	PSL Int 576	PSLINT	PSL	PSL Internal Node
P741	583	PSL Int 583	PSLINT	PSL	PSL Internal Node
P741	584	InterMiCOM in 1	INTERIN	InterMiCOM	InterMiCOM IM1 Signal Input - is driven by a message from the remote line end
P741	591	InterMiCOM in 8	INTERIN	InterMiCOM	InterMiCOM IM8 Signal Input - is driven by a message from the remote line end
P741	592	InterMiCOM out 1	INTEROUT	InterMiCOM	InterMiCOM IM1 Signal Output - mapping what will be sent to the remote line end
P741	599	InterMiCOM out 8	INTEROUT	InterMiCOM	InterMiCOM IM8 Signal Output - mapping what will be sent to the remote line end
P741	608	Control Input 1	CONTROL	Control Input Command	Control Input 1 - for SCADA and menu commands into PSL
P741	639	Control Input 32	CONTROL	Control Input Command	Control Input 32 - for SCADA and menu commands into PSL
P741	640	LED 1 Red	TRI_LED	PSL (LED)	Programmable LED 1 Red is energized
P741	641	LED 1 Grn	TRI_LED	PSL (LED)	Programmable LED 1 Green is energized
P741	654	LED 8 Red	TRI_LED	PSL (LED)	Programmable LED 8 Red is energized
P741	655	LED 8 Grn	TRI_LED	PSL (LED)	Programmable LED 8 Green is energized
P741	656	FnKey LED 1 Red	TRI_LED	PSL (LED)	Programmable Function Key LED 1 Red is energized

Relay	DDB No.	English Text	Type	Source	Description
P741	657	FnKey LED 1 Grn	TRI_LED	PSL (LED)	Programmable Function Key LED 1 Green is energized
P741	674	FnKey LED 10 Red	TRI_LED	PSL (LED)	Programmable Function Key LED 10 Red is energized
P741	675	FnKey LED 10 Grn	TRI_LED	PSL (LED)	Programmable Function Key LED 10 Green is energized
P741	676	Function Key 1	FUNCTION_KEY	PSL (Function Key)	Function Key 1 is activated. In 'Normal' mode it is high on key press and in 'Toggle' mode remains high/low on single key press
P741	685	Function Key 10	FUNCTION_KEY	PSL (Function Key)	Function Key 10 is activated. In 'Normal' mode it is high on key press and in 'Toggle' mode remains high/low on single key press
P741	700	Relay condit 01	OUTPUT_CON	Output Conditioner	Input to Relay Output Conditioner
P741	707	Relay condit 08	OUTPUT_CON	Output Conditioner	Input to Relay Output Conditioner
P741	764	LED 1 Red Condit	TRI_LED_CON	Output Conditioner	Assignment of input signal to drive output LED 1Red
P741	765	LED 1 Grn Condit	TRI_LED_CON	Output Conditioner	Assignment of signal to drive output LED 1Green. To drive LED1 Yellow DDB 764 and DDB 765 must be driven at the same time
P741	778	LED 8 Red Condit	TRI_LED_CON	Output Conditioner	Assignment of signal to drive output LED 8Red
P741	779	LED 8 Grn Condit	TRI_LED_CON	Output Conditioner	Assignment of signal to drive output LED 8 Green. To drive LED8 Yellow DDB 778 and DDB 779 must be active at the same time
P741	780	FnKey LED 1 Red	TRI_LED_CON	Output Conditioner	Assignment of signal to drive output Function Key LED 1 Red. This LED is associated with Function Key 1
P741	781	FnKey LED 1 Grn	TRI_LED_CON	Output Conditioner	Assignment of signal to drive output Function Key LED 1 Green. This LED is associated with Function Key 1. To drive function key LED, yellow DDB 692 and DDB 693 must be active at the same time
P741	797	FnKey LED 9 Grn	TRI_LED_CON	Output Conditioner	
P741	798	FnKey LED 10 Red	TRI_LED_CON	Output Conditioner	Assignment of signal to drive output Function Key LED 10 Red. This LED is associated with Function Key 10
P741	799	FnKey LED 10 Grn	TRI_LED_CON	Output Conditioner	Assignment of signal to drive output Function Key LED 10 Green. This LED is associated with Function Key 10. To drive function key LED1 yellow, DDB 710 and DDB 711 must be active at the same time
P741	960	PSL Int 38	PSL	PSLINT	PSL Internal Node
P741	1023	PSL Int 101	PSL	PSLINT	PSL Internal Node
P741	1024	Virtual Input 1	GOOSEIN	GOOSE Input Command	Virtual Input 1 Allows binary signals that are mapped to virtual inputs to interface into PSL
P741	1087	Virtual Input 64	GOOSEIN	GOOSE Input Command	Virtual Input 64 Allows binary signals that are mapped to virtual inputs to interface into PSL
P741	1152	Quality VIP1	PSL Input Signal	PSL	Validation of the virtual input 1 (signal correct).
P741	1215	Quality VIP64	PSL Input Signal	PSL	Validation of the virtual input 64 (signal correct).
P741	1280	PubPres VIP 1	PSL Input Signal	PSL	Publishing presence of virtual input 1: indicates virtual input 1 presence.
P741	1343	PubPres VIP 64	PSL Input Signal	PSL	Publishing presence of virtual input 64: indicates virtual input 64 presence.

3.19 P742 Logic Nodes

Relay	DDB No.	English Text	Type	Source	Description
P742	0	Relay Label 01	RELAY	Output Conditioner	Output Relay 01 - All trips (FSL) but not retrip
P742	1	Relay Label 02	RELAY	Output Conditioner	Output Relay 02 - All trips (FSL) but not retrip
P742	2	Relay Label 03	RELAY	Output Conditioner	Output Relay 03 - All trips (FSL) but not retrip
P742	3	Relay Label 04	RELAY	Output Conditioner	Output Relay 04
P742	19	Relay Label 20	RELAY	Output Conditioner	Output Relay 20
P742	64	Opto Label 01	OPTO	Opto Input	Opto Input 1
P742	87	Opto Label 24	OPTO	Opto Input	Opto Input 24
P742	96	LED 1	LED	Led Conditioner	Red LED 1
P742	103	LED 8	LED	Led Conditioner	Red LED 8
P742	104	Q1 Aux. (89b)	PSL Output Signal	PSL	89-B (Isolator open) Auxiliary Input (3 phase) of the isolator 1
P742	105	Q1 Aux. (89a)	PSL Output Signal	PSL	89-A (Isolator closed) Auxiliary Input (3 phase) of the isolator 1
P742	114	Q6 Aux. (89b)	PSL Output Signal	PSL	89-B (Isolator open) Auxiliary Input (3 phase) of the isolator 6
P742	115	Q6 Aux. (89a)	PSL Output Signal	PSL	89-A (Isolator closed) Auxiliary Input (3 phase) of the isolator 6
P742	116	Ext. 3 ph Trip	PSL Output Signal	PSL (50BF protection)	External 3 phase Trip Allows external protection to initiate breaker fail (if enabled)
P742	117	External Trip A	PSL Output Signal	PSL (50BF protection)	External 3 phase A Trip Allows external protection to initiate breaker fail (if enabled)
P742	118	External Trip B	PSL Output Signal	PSL (50BF protection)	External 3 phase B Trip Allows external protection to initiate breaker fail (if enabled)
P742	119	External Trip C	PSL Output Signal	PSL (50BF protection)	External 3 phase C Trip Allows external protection to initiate breaker fail (if enabled)
P742	120	Man.CB Close Cmd	PSL Output Signal	PSL	Manual/operator Circuit Breaker close command
P742	121	CB not available	PSL Output Signal	PSL	Circuit Breaker is not available to trip
P742	122	Ext. CB Fail	PSL Output Signal	PSL (50BF Backtrip protection)	50BF Backtrip order from another protection
P742	123	CB Aux. 3ph(52a)	PSL Output Signal	PSL	52-A (CB closed) CB Auxiliary Input (3 phase)
P742	124	CB Aux. 3ph(52b)	PSL Output Signal	PSL	52-B (CB open) CB Auxiliary Input (3 phase)
P742	125	CB Aux. A (52a)	PSL Output Signal	PSL	52-A (CB closed) CB Auxiliary Input (phase A)
P742	126	CB Aux. A (52b)	PSL Output Signal	PSL	52-B (CB open) CB Auxiliary Input (Phase A)
P742	127	CB Aux. B (52a)	PSL Output Signal	PSL	52-A (CB closed) CB Auxiliary Input (phase B)
P742	128	CB Aux. B (52b)	PSL Output Signal	PSL	52-B (CB open) CB Auxiliary Input (Phase B)
P742	129	CB Aux. C (52a)	PSL Output Signal	PSL	52-A (CB closed) CB Auxiliary Input (phase C)
P742	130	CB Aux. C (52b)	PSL Output Signal	PSL	52-B (CB open) CB Auxiliary Input (Phase C)
P742	131	Reset Lockout	PSL Output Signal	PSL (Commissioning)	Manual control to reset auto-recloser from lockout
P742	132	Sett Grp Bit LSB	PSL Output Signal	PSL	Setting Group Selector X1 (low bit) SG1 is active DDB 104=0 & DDB 105=0 SG2 is active DDB 104=1 & DDB 105=0
P742	133	Sett Grp Bit MSB	PSL Output Signal	PSL	Setting Group Selector 1X (high bit) SG3 is active DDB 104=0 & DDB 105=1 SG4 is active DDB 104=1 & DDB 105=1
P742	134	Reset All values	PSL Output Signal	PSL (Commissioning)	Not used
P742	135	Reset Latches	PSL Output Signal	PSL (Commissioning)	Reset all indications (Led and relays latched in PSL) that includes the Led Alarm
P742	136	User Alarm 1	PSL Output Signal	PSL	Triggers User Alarm 1 message to be alarmed on LCD display (self-resetting)
P742	142	User Alarm 7	PSL Output Signal	PSL	Triggers User Alarm 7 message to be alarmed on LCD display (self-resetting)

Relay	DDB No.	English Text	Type	Source	Description
P742	143	Aux Volt Superv	PSL Output Signal	PSL (Scheme Integrity)	Auxiliary voltage supervision (To freeze the CB/Isolators position)
P742	144	Virtual Relay 01	PSL Output Signal	PSL	Virtual Signal 01 from the PU to the CU via the fibre optic
P742	159	Virtual Relay 16	PSL Output Signal	PSL	Virtual Signal 16 from the PU to the CU via the fibre optic
P742	160	Man.Close Q1 Cmd	PSL Output Signal	PSL	Manual/operator Isolator 1 (switch) closing command
P742	165	Man.Close Q6 Cmd	PSL Output Signal	PSL	Manual/operator Isolator 6 (switch) closing command
P742	166	Man. Close CB	PSL Output Signal	PSL	Circuit Breaker closing order (CB Control)
P742	167	Man. Trip CB	PSL Output Signal	PSL	Circuit Breaker tripping order (CB Control)
P742	168	Ext. Retrip Ph A	PSL Input Signal	50BF Protection	Retrip of phase A due to an external trip initiation of this phase (at tBF3)
P742	169	Ext. Retrip Ph B	PSL Input Signal	50BF Protection	Retrip of phase B due to an external trip initiation of this phase (at tBF3)
P742	170	Ext. Retrip Ph C	PSL Input Signal	50BF Protection	Retrip of phase C due to an external trip initiation of this phase (at tBF3)
P742	171	Int. Retrip 3 ph	PSL Input Signal	50BF Protection	Retrip triphase due to a 87BB trip initiation (at tBF1)
P742	172	CBF Int Backtrip	PSL Input Signal	50BF Backtrip Protection	Backtrip triphase due to a trip initiation from CU (at tBF2)
P742	173	CBF Ext Backtrip	PSL Input Signal	50BF Backtrip Protection	Backtrip triphase due to a trip initiation (at tBF4)
P742	174	CB Fail Alarm	PSL Input Signal	50BF Protection	Circuit Breaker Fail Alarm Logical OR of DDB 172 to 173
P742	176	I>1 Start A	PSL Input Signal	Phase Overcurrent	1st Stage Overcurrent Start A
P742	177	I>1 Start B	PSL Input Signal	Phase Overcurrent	1st Stage Overcurrent Start B
P742	178	I>1 Start C	PSL Input Signal	Phase Overcurrent	1st Stage Overcurrent Start C
P742	179	IN>1 Start	PSL Input Signal	Earth Fault	1st Stage Earth Fault Start
P742	180	I>1 Trip	PSL Input Signal	Phase Overcurrent	1st Stage Overcurrent Trip 3 phase
P742	181	IN>1 Trip	PSL Input Signal	Earth Fault	1st Stage Earth Fault Trip
P742	182	I>2 Start A	PSL Input Signal	Phase Overcurrent	2nd Stage Overcurrent Start A
P742	183	I>2 Start B	PSL Input Signal	Phase Overcurrent	2nd Stage Overcurrent Start B
P742	184	I>2 Start C	PSL Input Signal	Phase Overcurrent	2nd Stage Overcurrent Start C
P742	185	IN>2 Start	PSL Input Signal	Earth Fault	2nd Stage Earth Fault Start
P742	186	I>2 Trip	PSL Input Signal	Phase Overcurrent	2nd Stage Overcurrent Trip 3 phase
P742	187	IN>2 Trip	PSL Input Signal	Earth Fault	2nd Stage Earth Fault Trip
P742	188	I>1 Timer Block	PSL Input Signal	PSL	Blocking of the 1st stage overcurrent time delay
P742	189	IN>1 Timer Block	PSL Input Signal	PSL	Blocking of the 2nd stage earth fault time delay
P742	190	I>2 Timer Block	PSL Input Signal	PSL	Blocking of the 1st stage overcurrent time delay
P742	191	IN>2 Timer Block	PSL Input Signal	PSL	Blocking of the 2nd stage earth fault time delay
P742	192	Virtual Opto 01	PSL Input Signal	PSL	Virtual Signal 01 from the CU to the PU via the fibre optic
P742	207	Virtual Opto 16	PSL Input Signal	PSL	Virtual Signal 16 from the CU to the PU via the fibre optic
P742	208	Zone 8 Off	PSL Input Signal	CU Information	Zone 8 in commissioning mode or blocked by a Circuitry fault or a PU error
P742	215	Zone 1 Off	PSL Input Signal	CU Information	Zone 1 in commissioning mode or blocked by a Circuitry fault or a PU error
P742	216	Trip Zone 8	PSL Input Signal	CU Information	Trip of Zone 8 (87BB, 50BF or manual)
P742	223	Trip Zone 1	PSL Input Signal	CU Information	Trip of Zone 1 (87BB, 50BF or manual)
P742	224	I>BB Start A	PSL Input Signal	Phase Overcurrent	Local overcurrent phase A Trip confirmation for 87BB or 50BF (CU) trip order
P742	225	I>BB Start B	PSL Input Signal	Phase Overcurrent	Local overcurrent phase B Trip confirmation for 87BB or 50BF (CU) trip order
P742	226	I>BB Start C	PSL Input Signal	Phase Overcurrent	Local overcurrent phase C Trip confirmation for 87BB or 50BF (CU) trip order
P742	227	IN>BB Start	PSL Input Signal	Earth Fault	Local overcurrent Trip confirmation for the neutral

Relay	DDB No.	English Text	Type	Source	Description
P742	228	I>BB Block Ph A	PSL Input Signal	Phase Overcurrent	Local overcurrent phase A to block the 87BB on external fault
P742	229	I>BB Block Ph B	PSL Input Signal	Phase Overcurrent	Local overcurrent phase B to block the 87BB on external fault
P742	230	I>BB Block Ph C	PSL Input Signal	Phase Overcurrent	Local overcurrent phase C to block the 87BB on external fault
P742	231	IN>BB Block	PSL Input Signal	Earth Fault	Local overcurrent earth to block the 87BB on external fault
P742	232	Saturation ph A	PSL Input Signal	Saturation	Saturation on phase A
P742	233	Saturation ph B	PSL Input Signal	Saturation	Saturation on phase B
P742	234	Saturation ph C	PSL Input Signal	Saturation	Saturation on phase C
P742	235	Current Overflow	PSL Input Signal	Saturation	Fibre optic Maximum primary current encoding exceeded
P742	236	Max Flux ph A	PSL Input Signal	Saturation	Maximum flux reached in the phase A CT
P742	237	Max Flux ph B	PSL Input Signal	Saturation	Maximum flux reached in the phase B CT
P742	238	Max Flux ph C	PSL Input Signal	Saturation	Maximum flux reached in the phase C CT
P742	239	Alarm OffsetABCN	PSL Input Signal	Saturation	Offset current read by the Analogue board Phase A, B, C or N
P742	240	Predict err ph A	PSL Input Signal	Saturation	Variation error phase A (derived current)
P742	241	Predict err ph B	PSL Input Signal	Saturation	Variation error phase B (derived current)
P742	242	Predict err ph C	PSL Input Signal	Saturation	Variation error phase C (derived current)
P742	244	Sat ADC ph A	PSL Input Signal	Saturation	Analogue to Digital Converter of phase A current saturated
P742	245	Sat ADC ph B	PSL Input Signal	Saturation	Analogue to Digital Converter of phase B current saturated
P742	246	Sat ADC ph C	PSL Input Signal	Saturation	Analogue to Digital Converter of phase C current saturated
P742	247	Sat ADC Neutral	PSL Input Signal	Saturation	Analogue to Digital Converter of the neutral current saturated
P742	248	Delta IA	PSL Input Signal	Saturation	Variation detected on phase A (not used)
P742	249	Delta IB	PSL Input Signal	Saturation	Variation detected on phase B (not used)
P742	250	Delta IC	PSL Input Signal	Saturation	Variation detected on phase C (not used)
P742	251	Delta IN	PSL Input Signal	Saturation	Variation detected on the neutral (not used)
P742	252	Fibre Com Error	PSL Input Signal	Relay Integrity	Fibre communication to the CU error
P742	253	Fibre Com Worn	PSL Input Signal	Relay Integrity	Warning: fibre communication to be changed
P742	254	Acq Error 3Io	PSL Input Signal	Relay Integrity	Sample acquisition error: 3 x Io <> In
P742	255	PU CT Fail IN	PSL Input Signal	Scheme Integrity	Internal PU CT failure
P742	256	Internal Trip	PSL Input Signal	Local Protection	Triphase Trip (87BB, 50BF(CU), I>, IN> or manual zone trip (CU)). Trip command directly applied to relay 1, 2, 3 (without PSL)
P742	257	Trip 87BB	PSL Input Signal	87BB Busbar Protection	Busbar trip order (87BB), general information common to all PUs, the PU can be connected to a healthy zone
P742	258	Trip 87BB Block	PSL Input Signal	Scheme Integrity	Busbar trip order blocked by the CU commissioning mode or Circuitry fault
P742	259	Trip 50BF (CU)	PSL Input Signal	50BF Backtrip Protection	Breaker fail trip order (50BF), general information common to all PUs, the PU can be connected to a healthy zone
P742	260	Man.Trip zone	PSL Input Signal	Commissioning	Manual Trip Order of a zone, general information common to all PUs, the PU can be connected to a healthy zone
P742	261	Dead Zone Fault	PSL Input Signal	Local Protection	Fault in the dead zone
P742	262	Dead Zone Phase	PSL Input Signal	Local Protection	Fault in the dead zone on a phase
P742	263	Dead Zone Earth	PSL Input Signal	Local Protection	Fault in the dead zone on the neutral
P742	264	Operating mode 1	PSL Input Signal	Scheme Integrity	Operating mode 1
P742	265	Operating mode 2	PSL Input Signal	Scheme Integrity	Operating mode 2
P742	266	Config. Error	PSL Input Signal	Scheme Integrity	Present configuration not correct
P742	267	Config. Valid	PSL Input Signal	Scheme Integrity	Valid Setting configuration
P742	268	Topology valid	PSL Input Signal	Scheme Integrity	Valid Topology file

Relay	DDB No.	English Text	Type	Source	Description
P742	269	Topo/Set valid	PSL Input Signal	Scheme Integrity	Wrong Topology address
P742	270	All Prot Blocked	PSL Input Signal	Commissioning	All the protections (CU & PU) disabled
P742	288	I> Any Trip	PSL Input Signal	Phase Overcurrent	Overcurrent Trip
P742	289	CBAvailabToTrip	PSL Input Signal	Scheme Integrity	Complement of DDB 297
P742	290	BF Trip Request	PSL Input Signal	50BF Protection	External or internal Breaker failure trip order request (50BF) Logical OR of DDB 122, 172 and 173
P742	294	INP Block 87BB/P	PSL Input Signal	PSL	Logic input to block the 87BB trip when the fault is detected by the fault element
P742	295	INP Block 87BB/N	PSL Input Signal	PSL	Logic input to block the 87BB trip when the fault is detected by the earth fault element
P742	296	I> No Trip	PSL Input Signal	Phase Overcurrent	Complement of DDB 288
P742	297	CBNotAvailToTrip	PSL Input Signal	Scheme Integrity	Logical OR of DDB 121 and 270
P742	298	BFTripNoRequest	PSL Input Signal	50BF Protection	Complement of DDB 290
P742	305	Ctrl CB Trip	PSL Input Signal	Manual Functionality	Manual Trip Order of the Circuit Breaker
P742	306	Ctrl CB Close	PSL Input Signal	Manual Functionality	Manual closing order of the Circuit Breaker
P742	307	PU Overhaul mode	PSL Input Signal	Commissioning	To indicate the PU to Overhaul mode
P742	308	50BF Disable	PSL Input Signal	Commissioning	To indicate the PU in 50BF blocked mode
P742	311	Disable 50BF	PSL Output Signal	Commissioning	To switch the PU in 50BF blocked mode
P742	312	Overhaul Mode	PSL Output Signal	Commissioning	To switch the PU in Overhaul mode
P742	314	I>BB Enabled	PSL Input Signal	Local protection	Overcurrent Local trip confirmation
P742	315	Trip Rel Latched	PSL Input Signal	Local protection	Trip Relays Latched
P742	316	I>2 Block BB ON	PSL Input Signal	87BB protection	Fast external phase fault criterion to block the connected zone enabled
P742	317	IN>2 Block BB ON	PSL Input Signal	87BB protection	Fast external neutral fault criterion to block the connected zone enabled
P742	318	Reset Trip Relay	PSL Input Signal	Commissioning	To reset the Trip relays
P742	319	Topo/Set Changed	PSL Input Signal	Commissioning	Change on topology or configuration
P742	320	Q1 Closed	PSL Input Signal	PSL	Isolator 1 closed (not (Q1 Aux. (89b) AND Q1 Aux. (89a)))
P742	321	Q1 Status Alarm	PSL Output Signal	Scheme Integrity	Isolator 1 discrepancy (Q1 Aux. (89b) = Q1 Aux. (89a) for too long
P742	330	Q6 Closed	PSL Input Signal	PSL	Isolator 6 closed (not (Q6 Aux. (89b) AND Q6 Aux. (89a)))
P742	331	Q6 Status Alarm	PSL Output Signal	Scheme Integrity	Isolator 6 discrepancy (Q6 Aux. (89b) = Q6 Aux. (89a) for too long
P742	332	CB Closed	PSL Input Signal	PSL	Circuit Breaker closed (not (CB Aux. (52b) AND CB Aux. (52a)))
P742	333	CB Healthy	PSL Input Signal	PSL	Complement of DDB 121
P742	336	Q1 Status Forced	PSL Input Signal	Commissioning	Isolator 1 status position forced open (by default) or closed
P742	341	Q6 Status Forced	PSL Input Signal	Commissioning	Isolator 6 status position forced open (by default) or closed
P742	342	CB Status Forced	PSL Input Signal	Commissioning	CB status position forced open (by default) or closed
P742	343	Forced Mode ON	PSL Input Signal	Commissioning	When the forced positions of the CB and the Isolators are used (during commissioning test)
P742	344	CB Aux. 52a	PSL Input Signal	CB Monitoring	DDB 123 or Logical OR of DDB 125 and 127 and 129
P742	345	CB Aux. 52b	PSL Input Signal	CB Monitoring	DDB 124 or Logical AND of DDB 126 and 128 and 130
P742	346	CB Trip 3 ph	PSL Input Signal	50BF Protection	Triphase Circuit Breaker Trip from CU (Init 50BF TBF1/TBF2), Logical OR of: 87BB, 50BF, Manual Trip Zone X
P742	347	CB Trip phase A	PSL Input Signal	50BF Protection	Phase A Circuit Breaker Trip (Init 50BF TBF3/TBF4), Logical OR of: O/C Protection, External Trip A, External Trip 3ph

Relay	DDB No.	English Text	Type	Source	Description
P742	348	CB Trip phase B	PSL Input Signal	50BF Protection	Phase B Circuit Breaker Trip (Init 50BF TBF3/TBF4), Logical OR of: O/C Protection, External Trip B, External Trip 3ph
P742	349	CB Trip phase C	PSL Input Signal	50BF Protection	Phase C Circuit Breaker Trip (Init 50BF TBF3/TBF4), Logical OR of: O/C Protection, External Trip C, External Trip 3ph
P742	351	General Alarm	PSL Input Signal	Relay Integrity	General Alarm
P742	352	CB Status Alarm	PSL Input Signal	Scheme Integrity	Indication of discrepancy between the 52a and 52b auxiliary contacts of the Circuit Breaker
P742	353	Man CB Cls Fail	PSL Input Signal	Scheme Integrity	Circuit Breaker Failed to Close (after a manual/operator close command)
P742	354	Man CB Trip Fail	PSL Input Signal	Scheme Integrity	Circuit Breaker Failed to Trip (after a manual/operator trip command)
P742	355	Ctrl Cls in Prog	PSL Input Signal	Commissioning	Control Close in Progress The relay has been given an instruction to close the circuit breaker, but the Manual Close timer Delay has not yet finished timing out
P742	356	Control Close	PSL Input Signal	Commissioning	Control Close command to the circuit breaker. Operates for a manual close command (menu, SCADA)
P742	357	Control Trip	PSL Input Signal	Commissioning	Control Trip Operator trip instruction to the circuit breaker, via menu, or SCADA. (Does not operate for protection element trips)
P742	358	Any Trip	PSL Input Signal	All Protections	Any Trip (Logical OR of DDBs: 0, 1, 2, 168, 169, 170, 171, 256, 261)
P742	362	RP1 Read Only	PSL Output signal	PSL	All setting changes and most command/control actions blocked for Rear Port 1
P742	363	RP2 Read Only	PSL Output signal	PSL	All setting changes and most command/control actions blocked for Rear Port 2 (not used)
P742	364	NIC Read Only	PSL Output signal	PSL	Enables NIC Read Only
P742	366	Block Contacts	PSL Output signal	PSL	Input DDB signal used to drive IED to be contacts blocked. If the device has been put into 'Contact Blocked' mode using this input signal, then the Apply Test command will not execute. This is to prevent a device that has been blocked by an external process having its contacts operated by a local operator using the HMI. If the Block Contacts DDB is not set and the Apply Test command in is issued, the contacts will change state
P742	367	Contacts Blocked	PSL Output signal	PSL	Indicates contacts blocked mode enabled. Can be mapped in PSL and sent via InterMiCOM to block contacts at the remote end
P742	375	CT Fail	PSL Output signal	PSL	CTS indication alarm (CT supervision alarm)
P742	376	87BB Fault Ph A	PSL Output signal	PSL	87BB Phase Fault detected in phase A
P742	377	87BB Fault Ph B	PSL Output signal	PSL	87BB Phase Fault detected in phase B
P742	378	87BB Fault Ph C	PSL Output signal	PSL	87BB Phase Fault detected in phase C
P742	379	87BB Earth Fault	PSL Output signal	PSL	87BB earth Fault detected
P742	384	Security Bypass	PSL Output signal	PSL	Cyber Security Bypass is Enabled
P742	428	LED Cond IN 1	LED_CON	PSL	Assignment of signal to drive LED 1 Red
P742	435	LED Cond IN 8	LED_CON	PSL	Assignment of signal to drive LED 8 Red
P742	436	Timer in 1	TIMERIN	PSL Timer Input	Input to Auxiliary Timer 1
P742	451	Timer in 16	TIMERIN	PSL Timer Input	Input to Auxiliary Timer 16
P742	452	Timer out 1	TIMEROUT	Timer Output	Output from Auxiliary Timer 1
P742	467	Timer out 16	TIMEROUT	Timer Output	Output from Auxiliary Timer 16
P742	468	Fault_REC_TRIG	FRT	PSL	Trigger for the Fault Recorder
P742	469	Battery Fail	PSL Input Signal	Relay Integrity	Front panel Battery Failure
P742	470	Field Voltage Fail	PSL Input Signal	Relay Integrity	48V Field Voltage Failure

Relay	DDB No.	English Text	Type	Source	Description
P742	486	Backup Setting	PSL Input Signal	InterMiCOM	Backup setting Alarm This is an alarm that is ON if any setting fail during the setting changing process. If this happens, the relay will use the last known good setting.
P742	489	SNTP Failure	PSL Input Signal	SNTP Sync	SNTP Alarm
P742	490	NIC MemAllocFail	PSL Input Signal	IEC 61850	MMS libraries memory allocation fails
P742	491	PTP Failure	PSL Input Signal	PTP Sync	PTP sync fail alarm
P742	494	BBRAM Failure	PSL Input Signal	Integrity Relay	BBRAM Verify Fail
P742	512	Virtual Output 1	GOOSEOUT	PSL	GOOSE Output 1 Allows user to control a binary signal which can be mapped via SCADA protocol output to other devices
P742	543	Virtual Output 32	GOOSEOUT	PSL	GOOSE Output 32 Allows user to control a binary signal which can be mapped via SCADA protocol output to other devices
P742	544	Timer In 17	TIMERIN	PSL	Input to Auxiliary Timer 17
P742	559	Timer In 32	TIMERIN	PSL	Input to Auxiliary Timer 32
P742	560	Timer Out 17	TIMEROUT	PSL	Timer out 17
P742	575	Timer Out 32	TIMEROUT	PSL	Timer out 32
P742	576	PSL Int 576	PSLINT	PSL	PSL Internal Node
P742	583	PSL Int 583	PSLINT	PSL	PSL Internal Node
P742	584	InterMiCOM in 1	INTERIN	InterMiCOM	InterMiCOM IM1 Signal Input - is driven by a message from the remote line end
P742	591	InterMiCOM in 8	INTERIN	InterMiCOM	InterMiCOM IM8 Signal Input - is driven by a message from the remote line end
P742	592	InterMiCOM out 1	INTEROUT	InterMiCOM	InterMiCOM IM1 Signal Output - mapping what will be sent to the remote line end
P742	599	InterMiCOM out 8	INTEROUT	InterMiCOM	InterMiCOM IM8 Signal Output - mapping what will be sent to the remote line end
P742	600	CBF I< Start A	PSL Output Signal	50BF Protection	Phase A undercurrent CBF Dead Pole Start
P742	601	CBF I< Start B	PSL Output Signal	50BF Protection	Phase B undercurrent CBF Dead Pole Start
P742	602	CBF I< Start C	PSL Output Signal	50BF Protection	Phase C undercurrent CBF Dead Pole Start
P742	603	CBF I> Start A	PSL Output Signal	50BF Protection	Phase A overcurrent CBF Dead Pole Start
P742	604	CBF I> Start B	PSL Output Signal	50BF Protection	Phase B overcurrent CBF Dead Pole Start
P742	605	CBF I> Start C	PSL Output Signal	50BF Protection	Phase C overcurrent CBF Dead Pole Start
P742	606	CBF I> Start N	PSL Output Signal	50BF Protection	Neutral overcurrent CBF Dead Pole Start
P742	608	Control Input 1	CONTROL	Control Input Command	Control Input 1 - for SCADA and menu commands into PSL
P742	639	Control Input 32	CONTROL	Control Input Command	Control Input 32 - for SCADA and menu commands into PSL
P742	700	Relay condit 01	OUTPUT_CON	Output Conditioner	Input to Relay Output Conditioner 1
P742	763	Relay condit 64	OUTPUT_CON	Output Conditioner	Input to Relay Output Conditioner 64
P742	923	PSL Int 1	PSL	PSLINT	PSL Internal Node
P742	1023	PSL Int 101	PSL	PSLINT	PSL Internal Node
P742	1024	VIRTUAL INPUT 1	GOOSEIN	GOOSE Input Command	Virtual Input 1 Allows binary signals that are mapped to virtual inputs to interface into PSL
P742	1087	VIRTUAL INPUT 64	GOOSEIN	GOOSE Input Command	Virtual Input 64 Allows binary signals that are mapped to virtual inputs to interface into PSL
P742	1152	Quality VIP1	PSL Input Signal	PSL	Validation of the virtual input 1 (signal correct)
P742	1215	Quality VIP64	PSL Input Signal	PSL	Validation of the virtual input 64 (signal correct)
P742	1280	PubPres VIP 1	PSL Input Signal	PSL	Publishing presence of virtual input 1: Indicates virtual input 1 presence.
P742	1343	PubPres VIP 64	PSL Input Signal	PSL	Publishing presence of virtual input 64: Indicates virtual input 64 presence.

3.20 P743 Logic Nodes

Relay	DDB No.	English Text	Type	Source	Description
P743	0	Relay Label 01	RELAY	Output Conditioner	Output Relay 01 - All trips (FSL) but not retrip
P743	1	Relay Label 02	RELAY	Output Conditioner	Output Relay 02 - All trips (FSL) but not retrip
P743	2	Relay Label 03	RELAY	Output Conditioner	Output Relay 03 - All trips (FSL) but not retrip
P743	3	Relay Label 04	RELAY	Output Conditioner	Output Relay 04
P743	19	Relay Label 20	RELAY	Output Conditioner	Output Relay 20
P743	64	Opto Label 01	OPTO	Opto Input	Opto Input 1
P743	87	Opto Label 24	OPTO	Opto Input	Opto Input 24
P743	104	Q1 Aux. (89b)	PSL Output Signal	PSL	89-B (Isolator open) Auxiliary Input (3 phase) of the isolator 1
P743	105	Q1 Aux. (89a)	PSL Output Signal	PSL	89-A (Isolator closed) Auxiliary Input (3 phase) of the isolator 1
P743	114	Q6 Aux. (89b)	PSL Output Signal	PSL	89-B (Isolator open) Auxiliary Input (3 phase) of the isolator 6
P743	115	Q6 Aux. (89a)	PSL Output Signal	PSL	89-A (Isolator closed) Auxiliary Input (3 phase) of the isolator 6
P743	116	Ext. 3 ph Trip	PSL Output Signal	PSL (50BF protection)	External 3 phase Trip Allows external protection to initiate breaker fail (if enabled)
P743	117	External Trip A	PSL Output Signal	PSL (50BF protection)	External 3 phase A Trip Allows external protection to initiate breaker fail (if enabled)
P743	118	External Trip B	PSL Output Signal	PSL (50BF protection)	External 3 phase B Trip Allows external protection to initiate breaker fail (if enabled)
P743	119	External Trip C	PSL Output Signal	PSL (50BF protection)	External 3 phase C Trip Allows external protection to initiate breaker fail (if enabled)
P743	120	Man.CB Close Cmd	PSL Output Signal	PSL	Manual/operator Circuit Breaker close command opto input
P743	121	CB not available	PSL Output Signal	PSL	Circuit Breaker is not available to trip
P743	122	Ext. CB Fail	PSL Output Signal	PSL (50BF Backtrip protection)	50BF Backtrip order from another protection
P743	123	CB Aux. 3ph(52a)	PSL Output Signal	PSL	52-A (CB closed) CB Auxiliary Input (3 phase)
P743	124	CB Aux. 3ph(52b)	PSL Output Signal	PSL	52-B (CB open) CB Auxiliary Input (3 phase)
P743	125	CB Aux. A (52a)	PSL Output Signal	PSL	52-A (CB closed) CB Auxiliary Input (phase A)
P743	126	CB Aux. A (52b)	PSL Output Signal	PSL	52-B (CB open) CB Auxiliary Input (Phase A)
P743	127	CB Aux. B (52a)	PSL Output Signal	PSL	52-A (CB closed) CB Auxiliary Input (phase B)
P743	128	CB Aux. B (52b)	PSL Output Signal	PSL	52-B (CB open) CB Auxiliary Input (Phase B)
P743	129	CB Aux. C (52a)	PSL Output Signal	PSL	52-A (CB closed) CB Auxiliary Input (phase C)
P743	130	CB Aux. C (52b)	PSL Output Signal	PSL	52-B (CB open) CB Auxiliary Input (Phase C)
P743	131	Reset Lockout	PSL Output Signal	PSL (Commissioning)	Manual control to reset auto-recloser from lockout
P743	132	Sett Grp Bit LSB	PSL Output Signal	PSL	Setting Group Selector X1 (low bit) SG1 is active DDB 104=0 & DDB 105=0 SG2 is active DDB 104=1 & DDB 105=0
P743	133	Sett Grp Bit MSB	PSL Output Signal	PSL	Setting Group Selector 1X (high bit) SG3 is active DDB 104=0 & DDB 105=1 SG4 is active DDB 104=1 & DDB 105=1
P743	134	Reset All values	PSL Output Signal	PSL (Commissioning)	Not used
P743	135	Reset Latches	PSL Output Signal	PSL (Commissioning)	Reset all indications (Led and relays latched in PSL) that includes the Led Alarm

Relay	DDB No.	English Text	Type	Source	Description
P743	136	User Alarm 1	PSL Output Signal	PSL	Triggers User Alarm 1 message to be alarmed on LCD display (self-resetting)
P743	142	User Alarm 7	PSL Output Signal	PSL	Triggers User Alarm 7 message to be alarmed on LCD display (self-resetting)
P743	143	Aux Volt Superv	PSL Output Signal	PSL (Scheme Integrity)	Auxiliary voltage supervision (To freeze the CB/Isolators position)
P743	144	Virtual Relay 01	PSL Output Signal	PSL	Virtual Signal 01 from the PU to the CU via the fibre optic
P743	159	Virtual Relay 16	PSL Output Signal	PSL	Virtual Signal 16 from the PU to the CU via the fibre optic
P743	160	Man.Close Q1 Cmd	PSL Output Signal	PSL	Manual/operator Isolator 1 (switch) closing command
P743	165	Man.Close Q6 Cmd	PSL Output Signal	PSL	Manual/operator Isolator 6 (switch) closing command
P743	166	Man. Close CB	PSL Output Signal	PSL	Circuit Breaker closing order (CB Control)
P743	167	Man. Trip CB	PSL Output Signal	PSL	Circuit Breaker tripping order (CB Control)
P743	168	Ext. Retrip Ph A	PSL Input Signal	50BF Protection	Retrip of phase A due to an external trip initiation of this phase (at tBF3)
P743	169	Ext. Retrip Ph B	PSL Input Signal	50BF Protection	Retrip of phase B due to an external trip initiation of this phase (at tBF3)
P743	170	Ext. Retrip Ph C	PSL Input Signal	50BF Protection	Retrip of phase C due to an external trip initiation of this phase (at tBF3)
P743	171	Int. Retrip 3 ph	PSL Input Signal	50BF Protection	Retrip triphase due to an 87BB trip initiation (at tBF1)
P743	172	CBF Int Backtrip	PSL Input Signal	50BF Backtrip Protection	Backtrip triphase due to a trip initiation from CU (at tBF2)
P743	173	CBF Ext Backtrip	PSL Input Signal	50BF Backtrip Protection	Backtrip triphase due to a trip initiation (at tBF4)
P743	174	CB Fail Alarm	PSL Input Signal	50BF Protection	Circuit Breaker Fail Alarm Logical OR of DDB 172 to 173
P743	176	I>1 Start A	PSL Input Signal	Phase Overcurrent	1st Stage Overcurrent Start A
P743	177	I>1 Start B	PSL Input Signal	Phase Overcurrent	1st Stage Overcurrent Start B
P743	178	I>1 Start C	PSL Input Signal	Phase Overcurrent	1st Stage Overcurrent Start C
P743	179	IN>1 Start	PSL Input Signal	Earth Fault	1st Stage Earth Fault Start
P743	180	I>1 Trip	PSL Input Signal	Phase Overcurrent	1st Stage Overcurrent Trip 3 phase
P743	181	IN>1 Trip	PSL Input Signal	Earth Fault	1st Stage Earth Fault Trip
P743	182	I>2 Start A	PSL Input Signal	Phase Overcurrent	2nd Stage Overcurrent Start A
P743	183	I>2 Start B	PSL Input Signal	Phase Overcurrent	2nd Stage Overcurrent Start B
P743	184	I>2 Start C	PSL Input Signal	Phase Overcurrent	2nd Stage Overcurrent Start C
P743	185	IN>2 Start	PSL Input Signal	Earth Fault	2nd Stage Earth Fault Start
P743	186	I>2 Trip	PSL Input Signal	Phase Overcurrent	2nd Stage Overcurrent Trip 3 phase
P743	187	IN>2 Trip	PSL Input Signal	Earth Fault	2nd Stage Earth Fault Trip
P742	188	I>1 Timer Block	PSL Input Signal	PSL	Blocking of the 1st stage overcurrent time delay
P742	189	IN>1 Timer Block	PSL Input Signal	PSL	Blocking of the 2nd stage earth fault time delay
P742	190	I>2 Timer Block	PSL Input Signal	PSL	Blocking of the 1st stage overcurrent time delay
P742	191	IN>2 Timer Block	PSL Input Signal	PSL	Blocking of the 2nd stage earth fault time delay
P743	192	Virtual Opto 01	PSL Input Signal	PSL	Virtual Signal 01 from the CU to the PU via the fibre optic
P743	207	Virtual Opto 16	PSL Input Signal	PSL	Virtual Signal 16 from the CU to the PU via the fibre optic
P743	208	Zone 8 Off	PSL Input Signal	CU Information	Zone 8 in commissioning mode or blocked by a Circuitry fault or a PU error
P743	215	Zone 1 Off	PSL Input Signal	CU Information	Zone 1 in commissioning mode or blocked by a Circuitry fault or a PU error
P743	216	Trip Zone 8	PSL Input Signal	CU Information	Trip of Zone 8 (87BB, 50BF or manual)
P743	223	Trip Zone 1	PSL Input Signal	CU Information	Trip of Zone 1 (87BB, 50BF or manual)
P743	224	I>BB Start A	PSL Input Signal	Phase Overcurrent	Local overcurrent phase A Trip confirmation for 87BB or 50BF (CU) trip order
P743	225	I>BB Start B	PSL Input Signal	Phase Overcurrent	Local overcurrent phase B Trip confirmation for 87BB or 50BF (CU) trip order

Relay	DDB No.	English Text	Type	Source	Description
P743	226	I>BB Start C	PSL Input Signal	Phase Overcurrent	Local overcurrent phase C Trip confirmation for 87BB or 50BF (CU) trip order
P743	227	IN>BB Start	PSL Input Signal	Earth Fault	Local overcurrent Trip confirmation for the neutral
P743	228	I>BB Block Ph A	PSL Input Signal	Phase Overcurrent	Local overcurrent phase A to block the 87BB on external fault
P743	229	I>BB Block Ph B	PSL Input Signal	Phase Overcurrent	Local overcurrent phase B to block the 87BB on external fault
P743	230	I>BB Block Ph C	PSL Input Signal	Phase Overcurrent	Local overcurrent phase C to block the 87BB on external fault
P743	231	IN>BB Block	PSL Input Signal	Earth Fault	Local overcurrent earth to block the 87BB on external fault
P743	232	Saturation ph A	PSL Input Signal	Saturation	Saturation on phase A
P743	233	Saturation ph B	PSL Input Signal	Saturation	Saturation on phase B
P743	234	Saturation ph C	PSL Input Signal	Saturation	Saturation on phase C
P743	235	Current Overflow	PSL Input Signal	Saturation	Fibre optic Maximum primary current encoding exceeded
P743	236	Max Flux ph A	PSL Input Signal	Saturation	Maximum flux reached in the phase A CT
P743	237	Max Flux ph B	PSL Input Signal	Saturation	Maximum flux reached in the phase B CT
P743	238	Max Flux ph C	PSL Input Signal	Saturation	Maximum flux reached in the phase C CT
P743	239	Alarm OffsetABCN	PSL Input Signal	Saturation	Offset current read by the Analog board Phase A, B, C or N
P743	240	Predict err ph A	PSL Input Signal	Saturation	Variation error phase A (derived current)
P743	241	Predict err ph B	PSL Input Signal	Saturation	Variation error phase B (derived current)
P743	242	Predict err ph C	PSL Input Signal	Saturation	Variation error phase C (derived current)
P743	244	Sat ADC ph A	PSL Input Signal	Saturation	Analog to Digital Converter of phase A current saturated
P743	245	Sat ADC ph B	PSL Input Signal	Saturation	Analog to Digital Converter of phase B current saturated
P743	246	Sat ADC ph C	PSL Input Signal	Saturation	Analog to Digital Converter of phase C current saturated
P743	247	Sat ADC Neutral	PSL Input Signal	Saturation	Analog to Digital Converter of the neutral current saturated
P743	248	Delta IA	PSL Input Signal	Saturation	Variation detected on phase A (not used)
P743	249	Delta IB	PSL Input Signal	Saturation	Variation detected on phase B (not used)
P743	250	Delta IC	PSL Input Signal	Saturation	Variation detected on phase C (not used)
P743	251	Delta IN	PSL Input Signal	Saturation	Variation detected on the neutral (not used)
P743	252	Fibre Com Error	PSL Input Signal	Relay Integrity	Fibre communication to the CU error
P743	253	Fibre Com Worn	PSL Input Signal	Relay Integrity	Warning: fibre communication to be changed
P743	254	Acq Error 3Io	PSL Input Signal	Relay Integrity	Sample acquisition error: 3 x Io <> In
P743	255	PU CT Fail IN	PSL Input Signal	Scheme Integrity	Internal PU CT failure
P743	256	Internal Trip	PSL Input Signal	Local Protection	Triphase Trip (87BB, 50BF(CU), I>, IN> or manual zone trip (CU)) Trip command directly applied to relay 1, 2, 3 (without PSL)
P743	257	Trip 87BB	PSL Input Signal	87BB Busbar Protection	Busbar trip order (87BB), general information common to all Pus, the PU can be connected to a healthy zone
P743	258	Trip 87BB Block	PSL Input Signal	Scheme Integrity	Busbar trip order blocked by the CU commissioning mode or Circuitry fault
P743	259	Trip 50BF (CU)	PSL Input Signal	50BF Backtrip Protection	Breaker fail trip order (50BF), general information common to all PUs, the PU can be connected to a healthy zone
P743	260	Man.Trip zone	PSL Input Signal	Commissioning	Manual Trip Order of a zone, general information common to all PUs, the PU can be connected to a healthy zone
P743	261	Dead Zone Fault	PSL Input Signal	Local Protection	Fault in the dead zone
P743	262	Dead Zone Phase	PSL Input Signal	Local Protection	Fault in the dead zone on a phase
P743	263	Dead Zone Earth	PSL Input Signal	Local Protection	Fault in the dead zone on the neutral
P743	264	Operating mode 1	PSL Input Signal	Scheme Integrity	Operating mode 1

Relay	DDB No.	English Text	Type	Source	Description
P743	265	Operating mode 2	PSL Input Signal	Scheme Integrity	Operating mode 2
P743	266	Config. Error	PSL Input Signal	Scheme Integrity	Present configuration not correct
P743	267	Config. Valid	PSL Input Signal	Scheme Integrity	Valid Setting configuration
P743	268	Topology valid	PSL Input Signal	Scheme Integrity	Valid Topology file
P743	269	Topo/Set valid	PSL Input Signal	Scheme Integrity	Wrong Topology address
P743	270	All Prot Blocked	PSL Input Signal	Commissioning	All the protections (CU & PU) disabled
P743	288	I> Any Trip	PSL Input Signal	Phase Overcurrent	Overcurrent Trip
P743	289	CBAvailabToTrip	PSL Input Signal	Scheme Integrity	Circuit Breaker Healthy (Can Trip)
P743	290	BF Trip Request	PSL Input Signal	50BF Protection	External or internal Breaker failure trip order request (50BF) Logical OR of DDB 122, 172 and 173
P743	294	INP Block 87BB/P	PSL Input Signal	PSL	Logic input to block the 87BB trip when the fault is detected by the fault element
P743	295	INP Block 87BB/N	PSL Input Signal	PSL	Logic input to block the 87BB trip when the fault is detected by the earth fault element
P743	296	I> No Trip	PSL Input Signal	Phase Overcurrent	Complement of DDB 288
P743	297	CBNotAvailToTrip	PSL Input Signal	Scheme Integrity	Logical OR of DDB 121 and 270
P743	298	BFTripNoRequest	PSL Input Signal	50BF Protection	Complement of DDB 290
P743	305	Ctrl CB Trip	PSL Input Signal	Manual Functionality	Manual Trip Order of the Circuit Breaker
P743	306	Ctrl CB Close	PSL Input Signal	Manual Functionality	Manual closing order of the Circuit Breaker
P743	307	PU Overhaul mode	PSL Input Signal	Commissioning	To indicate the PU to Overhaul mode
P743	308	50BF Disable	PSL Input Signal	Commissioning	To indicate the PU in 50BF blocked mode
P743	311	Disable 50BF	PSL Output Signal	Commissioning	To switch the PU in 50BF blocked mode
P743	312	Overhaul Mode	PSL Output Signal	Commissioning	To switch the PU in Overhaul mode
P743	314	I>BB Enabled	PSL Input Signal	Local protection	Overcurrent Local trip confirmation
P743	315	Trip Rel Latched	PSL Input Signal	Local protection	Trip Relays Latched
P743	316	I>2 Block BB ON	PSL Input Signal	Local protection	Fast external phase fault criterion to block the connected zone enabled
P743	317	IN>2 Block BB ON	PSL Input Signal	Local protection	Fast external neutral fault criterion to block the connected zone enabled
P743	318	Reset Trip Relay	PSL Input Signal	Commissioning	To reset the Trip relays
P743	319	Topo/Set Changed	PSL Input Signal	Commissioning	Change on topology or configuration
P743	320	Q1 Closed	PSL Input Signal	PSL	Isolator 1 closed (not (Q1 Aux. (89b) AND Q1 Aux. (89a)))
P743	321	Q1 Status Alarm	PSL Output Signal	Scheme Integrity	Isolator 1 discrepancy (Q1 Aux. (89b) = Q1 Aux. (89a) for too long
P743	330	Q6 Closed	PSL Input Signal	PSL	Isolator 6 closed (not (Q6 Aux. (89b) AND Q6 Aux. (89a)))
P743	331	Q6 Status Alarm	PSL Output Signal	Scheme Integrity	Isolator 6 discrepancy (Q6 Aux. (89b) = Q6 Aux. (89a) for too long
P743	332	CB Closed	PSL Input Signal	PSL	Circuit Breaker closed (not (CB Aux. (52b) AND CB Aux. (52a)))
P743	333	CB Healthy	PSL Input Signal	PSL	Complement of DDB 121
P743	336	Q1 Status Forced	PSL Input Signal	Commissioning	Isolator 1 status position forced open (by default) or closed
P743	341	Q6 Status Forced	PSL Input Signal	Commissioning	Isolator 6 status position forced open (by default) or closed
P743	342	CB Status Forced	PSL Input Signal	Commissioning	CB status position forced open (by default) or closed
P743	343	Forced Mode ON	PSL Input Signal	Commissioning	When the forced positions of the CB and the Isolators are used (during commissioning test)
P743	344	CB Aux. 52a	PSL Input Signal	CB Monitoring	DDB 123 or Logical OR of DDB 125 and 127 and 129
P743	345	CB Aux. 52b	PSL Input Signal	CB Monitoring	DDB 124 or Logical AND of DDB 126 and 128 and 130
P743	346	CB Trip 3 ph	PSL Input Signal	50BF Protection	Triphase Circuit Breaker Trip from CU (Init 50BF TBF1 / TBF2), Logical OR of: 87BB, 50BF, Manual Trip Zone X

Relay	DDB No.	English Text	Type	Source	Description
P743	347	CB Trip phase A	PSL Input Signal	50BF Protection	Phase A Circuit Breaker Trip (Init 50BF TBF3/TBF4), Logical OR of: O/C Protection, External Trip A, External Trip 3ph
P743	348	CB Trip phase B	PSL Input Signal	50BF Protection	Phase B Circuit Breaker Trip (Init 50BF TBF3/TBF4), Logical OR of: O/C Protection, External Trip B, External Trip 3ph
P743	349	CB Trip phase C	PSL Input Signal	50BF Protection	Phase C Circuit Breaker Trip (Init 50BF TBF3/TBF4), Logical OR of: O/C Protection, External Trip C, External Trip 3ph
P743	351	General Alarm	PSL Input Signal	Relay Integrity	General Alarm
P743	352	CB Status Alarm	PSL Input Signal	Scheme Integrity	Indication of discrepancy between the 52a and 52b auxiliary contacts of the Circuit Breaker
P743	353	Man CB Cls Fail	PSL Input Signal	Scheme Integrity	Circuit Breaker Failed to Close (after a manual/operator close command)
P743	354	Man CB Trip Fail	PSL Input Signal	Scheme Integrity	Circuit Breaker Failed to Trip (after a manual/operator trip command)
P743	355	Ctrl Cls in Prog	PSL Input Signal	Commissioning	Control Close in Progress The relay has been given an instruction to close the circuit breaker, but the Manual Close timer Delay has not yet finished timing out
P743	356	Control Close	PSL Input Signal	Commissioning	Control Close command to the circuit breaker Operates for a manual close command (menu, SCADA)
P743	357	Control Trip	PSL Input Signal	Commissioning	Control Trip Operator trip instruction to the circuit breaker, via menu, or SCADA. (Does not operate for protection element trips)
P743	358	Any Trip	PSL Input Signal	All Protections	Any Trip (Logical OR of DDBs: 0, 1, 2, 168, 169, 170, 171, 256, 261)
P743	362	RP1 Read only	PSL Output signal	PSL	All setting changes and most command/control actions blocked for Rear Port 1
P743	363	RP2 Read only	PSL Output signal	PSL	All setting changes and most command/control actions blocked for Rear Port 2 (when option available)
P743	364	NIC Read Only	PSL Output signal	PSL	All setting changes and most command/control actions blocked for the Ethernet port (when option available)
P743	366	Block Contacts	PSL Output signal	PSL	Input DDB signal used to drive IED to be contacts blocked. If the device has been put into 'Contact Blocked' mode using this input signal, then the Apply Test command will not execute. This is to prevent a device that has been blocked by an external process having its contacts operated by a local operator using the HMI. If the Block Contacts DDB is not set and the Apply Test command in is issued, the contacts will change state
P743	367	Contacts Blocked	PSL Output signal	PSL	Indicates contacts blocked mode enabled. Can be mapped in PSL and sent via InterMiCOM to block contacts at the remote end
P743	368	Intlock CB OPN	PSL Output signal	IEC 61850	To authorise Circuit Breaker Opening in IEC 61850 model
P743	369	Intlock CB CLS	PSL Output signal	IEC 61850	To authorise Circuit Breaker Closing in IEC 61850 model
P743	375	CT Fail	PSL Output signal	PSL	CTS indication alarm (CT supervision alarm)
P743	376	87BB Fault Ph A	PSL Output signal	PSL	87BB Phase Fault detected in phase A
P743	377	87BB Fault Ph B	PSL Output signal	PSL	87BB Phase Fault detected in phase B
P743	378	87BB Fault Ph C	PSL Output signal	PSL	87BB Phase Fault detected in phase C
P743	379	87BB Earth Fault	PSL Output signal	PSL	87BB earth Fault detected
P743	384	Security Bypass	PSL Output signal	PSL	Cyber Security Bypass is Enabled

Relay	DDB No.	English Text	Type	Source	Description
P743	436	Timer in 1	TIMERIN	PSL Timer Input	Input to Auxiliary Timer 1
P743	451	Timer in 16	TIMERIN	PSL Timer Input	Input to Auxiliary Timer 16
P743	452	Timer out 1	TIMEROUT	Timer Output	Output from Auxiliary Timer 1
P743	467	Timer out 16	TIMEROUT	Timer Output	Output from Auxiliary Timer 16
P743	468	Fault_REC_TRIG	FRT	PSL	Trigger for the Fault Recorder
P743	469	Battery Fail	PSL Input Signal	Relay Integrity	Front panel Battery Failure
P743	470	Field Voltage Fail	PSL Input Signal	Relay Integrity	48V Field Voltage Failure
P743	471	Comm2 H/W FAIL	PSL Input Signal	Second rear port	Second rear port Alarm
P743	472	GOOSE IED Absent	PSL Input Signal	IEC 61850	The IED is not subscribed to a publishing IED in the current scheme
P743	473	NIC Not Fitted	PSL Input Signal	IEC 61850	Ethernet board not fitted
P743	474	NIC No Response	PSL Input Signal	IEC 61850	Ethernet board not responding
P743	475	NIC Fatal Error	PSL Input Signal	IEC 61850	Ethernet board unrecoverable error
P743	476	NIC Soft. Reload	PSL Input Signal	IEC 61850	Ethernet card software reload Alarm
P743	477	Bad TCP/IP Cfg.	PSL Input Signal	IEC 61850	Bad TCP/IP configuration alarm
P743	478	Bad OSI Config.	PSL Input Signal	IEC 61850	Bad OSI configuration alarm
P743	479	NIC Link Fail	PSL Input Signal	IEC 61850	Ethernet link lost
P743	480	NIC SW Mis-Match	PSL Input Signal	IEC 61850	Ethernet board software not compatible with main CPU
P743	481	IP Addr Conflict	PSL Input Signal	IEC 61850	The IP address of the IED is already used by another IED
P743	482	IM Loopback	PSL Input Signal	InterMiCOM	InterMiCOM indication that Loopback testing is in progress
P743	483	IM Message Fail	PSL Input Signal	InterMiCOM	InterMiCOM Message Failure Alarm
P743	484	IM Data CD Fail	PSL Input Signal	InterMiCOM	InterMiCOM Data Channel Detect Fail
P743	485	IM Channel Fail	PSL Input Signal	InterMiCOM	InterMiCOM Channel Failure Alarm
P743	486	Backup Setting	PSL Input Signal	InterMiCOM	Backup setting Alarm This is an alarm that is ON if any setting fail during the setting changing process. If this happens, the relay will use the last known good setting.
P743	489	SNTP Failure	PSL Input Signal	SNTP Sync	SNTP Alarm
P743	490	NICMemAllocFail	PSL Input Signal	IEC 61850	MMS libraries memory allocation fails
P743	491	PTP Failure	PSL Input Signal	PTP Sync	PTP sync fail alarm
P743	494	BBRAM Failure	PSL Input Signal	Integrity Relay	BBRAM Verify Fail
P743	512	GOOSE OUT 1	GOOSEOUT	PSL	GOOSE Output 1 Allows user to control a binary signal which can be mapped via SCADA protocol output to other devices
P743	543	GOOSE OUT 32	GOOSEOUT	PSL	GOOSE Output 32 Allows user to control a binary signal which can be mapped via SCADA protocol output to other devices
P743	544	Timer in 17	TIMERIN	PSL Timer Input	Input to Auxiliary Timer 17
P743	559	Timer in 32	TIMERIN	PSL Timer Input	Input to Auxiliary Timer 32
P743	560	Timer out 17	TIMEROUT	Timer Output	Output from Auxiliary Timer 17
P743	575	Timer out 32	TIMEROUT	Timer Output	Output from Auxiliary Timer 32
P743	576	PSL Int 576	PSLINT	PSL	PSL Internal Node
P743	583	PSL Int 583	PSLINT	PSL	PSL Internal Node
P743	584	InterMiCOM in 1	INTERIN	InterMiCOM	InterMiCOM IM1 Signal Input - is driven by a message from the remote line end
P743	591	InterMiCOM in 8	INTERIN	InterMiCOM	InterMiCOM IM8 Signal Input - is driven by a message from the remote line end
P743	592	InterMiCOM out 1	INTEROUT	InterMiCOM	InterMiCOM IM1 Signal Output - mapping what will be sent to the remote line end
P743	599	InterMiCOM out 8	INTEROUT	InterMiCOM	InterMiCOM IM8 Signal Output - mapping what will be sent to the remote line end
P743	600	CBF I< Start A	PSL Output Signal	50BF Protection	Phase A undercurrent CBF Dead Pole Start
P743	601	CBF I< Start B	PSL Output Signal	50BF Protection	Phase B undercurrent CBF Dead Pole Start
P743	602	CBF I< Start C	PSL Output Signal	50BF Protection	Phase C undercurrent CBF Dead Pole Start

Relay	DDB No.	English Text	Type	Source	Description
P743	603	CBF I> Start A	PSL Output Signal	50BF Protection	Phase A overcurrent CBF Dead Pole Start
P743	604	CBF I> Start B	PSL Output Signal	50BF Protection	Phase B overcurrent CBF Dead Pole Start
P743	605	CBF I> Start C	PSL Output Signal	50BF Protection	Phase C overcurrent CBF Dead Pole Start
P743	606	CBF I> Start N	PSL Output Signal	50BF Protection	Neutral overcurrent CBF Dead Pole Start
P743	608	Control Input 1	CONTROL	Control Input Command	Control Input 1 - for SCADA and menu commands into PSL
P743	639	Control Input 32	CONTROL	Control Input Command	Control Input 32 - for SCADA and menu commands into PSL
P743	640	LED 1 Red	TRI_LED	PSL (LED)	Programmable LED 1 Red is energized
P743	641	LED 1 Grn	TRI_LED	PSL (LED)	Programmable LED 1 Green is energized
P743	674	LED 18 Red	TRI_LED	PSL (LED)	Programmable LED 8 Red is energized
P743	675	LED 18 Grn	TRI_LED	PSL (LED)	Programmable LED 8 Green is energized
P743	676	FnKey LED 1 Red	TRI_LED	PSL (LED)	Programmable Function Key LED 1 Red is energized
P743	657	FnKey LED 1 Grn	TRI_LED	PSL (LED)	Programmable Function Key LED 1 Green is energized
P743	674	FnKey LED 10 Red	TRI_LED	PSL (LED)	Programmable Function Key LED 10 Red is energized
P743	675	FnKey LED 10 Grn	TRI_LED	PSL (LED)	Programmable Function Key LED 10 Green is energized
P743	676	Function Key 1	FUNCTION_KEY	PSL (Function Key)	Function Key 1 is activated In 'Normal' mode it is high on key press and in 'Toggle' mode remains high/low on single key press
P743	685	Function Key 10	FUNCTION_KEY	PSL (Function Key)	Function Key 10 is activated In 'Normal' mode it is high on key press and in 'Toggle' mode remains high/low on single key press
P743	700	Relay condit 01	OUTPUT_CON	Output Conditioner	Input to Relay Output Conditioner
P743	763	Relay condit 64	OUTPUT_CON	Output Conditioner	Input to Relay Output Conditioner
P743	764	LED 1 Red Condit	TRI_LED_CON	Output Conditioner	Assignment of input signal to drive output LED 1Red
P743	765	LED 1 Grn Condit	TRI_LED_CON	Output Conditioner	Assignment of signal to drive output LED 1Green To drive LED1 Yellow DDB 764 and DDB 765 must be driven at the same time
P743	778	LED 8 Red Condit	TRI_LED_CON	Output Conditioner	Assignment of signal to drive output LED 8Red
P743	779	LED 8 Grn Condit	TRI_LED_CON	Output Conditioner	Assignment of signal to drive output LED 8 Green To drive LED8 Yellow DDB 778 and DDB 779 must be active at the same time
P743	780	FnKey LED 1 Red	TRI_LED_CON	Output Conditioner	Assignment of signal to drive output Function Key LED 1 Red This LED is associated with Function Key 1
P743	781	FnKey LED 1 Grn	TRI_LED_CON	Output Conditioner	Assignment of signal to drive output Function Key LED 1 Green This LED is associated with Function Key 1 To drive function key LED, yellow DDB 692 and DDB 693 must be active at the same time
P743	798	FnKey LED 10 Red	TRI_LED_CON	Output Conditioner	Assignment of signal to drive output Function Key LED 10 Red This LED is associated with Function Key 10
P743	799	FnKey LED 10 Grn	TRI_LED_CON	Output Conditioner	Assignment of signal to drive output Function Key LED 10 Green This LED is associated with Function Key 10 To drive function key LED1 yellow, DDB 710 and DDB 711 must be active at the same time
P743	923	Int. Node 1	PSLINT	PSL	Can be created automatically by the PSL
P743	1022	Int. Node 101	PSLINT	PSL	Can be created automatically by the PSL
P743	1024	VIRTUAL INPUT 1	GOOSEIN	GOOSE Input Command	Virtual Input 1 Allows binary signals that are mapped to virtual inputs to interface into PSL

Relay	DDB No.	English Text	Type	Source	Description
P743	1087	VIRTUAL INPUT 64	GOOSEIN	GOOSE Input Command	Virtual Input 64 Allows binary signals that are mapped to virtual inputs to interface into PSL
P743	1152	Quality VIP1	PSL Input Signal	PSL	Validation of the virtual input 1 (signal correct).
P743	1215	Quality VIP64	PSL Input Signal	PSL	Validation of the virtual input 64 (signal correct).
P743	1280	PubPres VIP 1	PSL Input Signal	PSL	Publishing presence of virtual input 1: indicates virtual input 1 presence
P743	1343	PubPres VIP 64	PSL Input Signal	PSL	Publishing presence of virtual input 64: indicates virtual input 64 presence

3.21 Default PSL

The following section details the default settings of the PSL.

The P74x models are as follows:

Model	Logic Inputs	Relay Outputs
P741xxxAxxxxxxK	8	8
P742xxxAxxxxxxJ P742xxxBxxxxxxJ	16 8	8 8 + 4 high break relays
P743xxxAxxxxxxK P743xxxBxxxxxxK P743xxxCxxxxxxK P743xxxDxxxxxxK	24 16 24 16	16 16 + 4 high break relays 8 + 4 high break relays 8 + 8 high break relays

3.22 Logic Input Mapping

The default mappings for each of the opto-isolated inputs are as shown in the following table:

Central Unit P741:

Opto-Input Number	P74x Relay Text	Function
1	Input Label 01	Disable 87BB on zone 1 & zone 2
2	Input Label 02	Disable 87BB & 50BF on zone 1 & zone 2
3	Input Label 03	Disable 87BB & 50BF on zone 1
4	Input Label 04	Disable 87BB & 50BF on zone 2
5	Input Label 05	Maintenance mode authorization
6	Input Label 06	Not mapped
7	Input Label 07	Not mapped
8	Input Label 08	Block all protections (CU & PU)

Peripheral Unit P742:

Opto-Input Number	P74x Relay Text	Function
1	Input Label 01	Reset Indication
2	Input Label 02	Reset Trip Latch
3	Input Label 03	Isolator 1 closed auxiliary contact (89a)
4	Input Label 04	Isolator 1 open auxiliary contact (89b)
5	Input Label 05	Isolator 2 closed auxiliary contact (89a)
6	Input Label 06	Isolator 2 open auxiliary contact (89b)
7	Input Label 07	Circuit Breaker closed auxiliary contact (52a)
8	Input Label 08	Circuit Breaker open auxiliary contact (52b)
9	Input Label 09	Isolator 3 closed auxiliary contact (89a)
10	Input Label 10	Isolator 3 open auxiliary contact (89b)
11	Input Label 11	Mode 50BF disabled
12	Input Label 12	Can be linked to External 3 phase trip initiation
13	Input Label 13	CB not available
14	Input Label 14	Can be linked to External circuit breaker failure
15	Input Label 15	Manual CB close command
16	Input Label 16	Mode Overhaul

Peripheral Unit P743:

Opto-Input Number	P74x Relay Text	Function
1	Input Label 01	Reset Indication
2	Input Label 02	Reset Trip Latch
3	Input Label 03	Isolator 1 closed auxiliary contact (89a)
4	Input Label 04	Isolator 1 open auxiliary contact (89b)
5	Input Label 05	Isolator 2 closed auxiliary contact (89a)
6	Input Label 06	Isolator 2 open auxiliary contact (89b)
7	Input Label 07	Circuit Breaker closed auxiliary contact (52a)
8	Input Label 08	Circuit Breaker open auxiliary contact (52b)
9	Input Label 09	Isolator 3 closed auxiliary contact (89a)
10	Input Label 10	Isolator 3 open auxiliary contact (89b)
11	Input Label 11	Mode 50BF disabled
12	Input Label 12	Can be linked to External 3 phase trip initiation
13	Input Label 13	CB not available
14	Input Label 14	Can be linked to External circuit breaker failure
15	Input Label 15	Manual CB close command
16	Input Label 16	Mode Overhaul
17	Input Label 17	Can be linked to External single phase A trip initiation
18	Input Label 18	Can be linked to External single phase B trip initiation
19	Input Label 19	Can be linked to External single phase C trip initiation
20	Input Label 20	Not Mapped
21	Input Label 21	Not Mapped
22	Input Label 22	Not Mapped
23	Input Label 23	Not Mapped
24	Input Label 24	Not Mapped

3.23 Relay Output Contact Mapping

The default mappings for each of the relay output contacts are as shown in the following table:

Central Unit P741:

Relay Contact Number	P74x Relay Text	P74x Relay Conditioner	Function
1	Relay Label 01	Pick-up 0/0	Trip 87BB or 50BF backtrip or overcurrent/earth fault trip (fixed)
2	Relay Label 02	Pick-up 0/0	Trip 87BB or 50BF backtrip or overcurrent/earth fault trip (fixed)
3	Relay Label 03	Pick-up 0/0	Trip 87BB or 50BF backtrip or overcurrent/earth fault trip (fixed)
4	Relay Label 04	Pick-up 0/0	Trip zone 1
5	Relay Label 05	Pick-up 0/0	Trip zone 2
6	Relay Label 06	Pick-up 0/0	Circuit fault or PU error
7	Relay Label 07	Pick-up 0/0	Zone 1 or zone 2 blocked
8	Relay Label 08	Pick-up 0/0	Check Zone fault

Peripheral Unit P742:

Relay Contact Number	P74x Relay Text	P74x Relay Conditioner	Function
1	Relay Label 01	Pick-up 0/0	Trip 87BB or 50BF backtrip or overcurrent/earth fault trip (fixed)
2	Relay Label 02	Pick-up 0/0	Trip 87BB or 50BF backtrip or overcurrent/earth fault trip (fixed)
3	Relay Label 03	Pick-up 0/0	Trip 87BB or 50BF backtrip or overcurrent/earth fault trip (fixed)
4	Relay Label 04	Pick-up 0/0	Circuit Breaker failure
5	Relay Label 05	Pick-up 0/0	Circuit Breaker failure or out of service
6	Relay Label 06	Pick-up 0/0	Circuit Breaker failure retrip
7	Relay Label 07	Pick-up 0/0	Trip or Dead Zone Fault
8	Relay Label 08	Pick-up 0/0	Circuit Breaker or Isolator status alarm
9	Relay Label 09	Pick-up 0/0	Circuit Breaker failure retrip phase A
10	Relay Label 10	Pick-up 0/0	Circuit Breaker failure retrip phase B

Relay Contact Number	P74x Relay Text	P74x Relay Conditioner	Function
11	Relay Label 11	Pick-up 0/0	Circuit Breaker failure retrip phase C
12	Relay Label 12	Pick-up 0/0	Not Mapped

Peripheral Unit P743:

Relay Contact Number	P74x Relay Text	P74x Relay Conditioner	Function
1	Relay Label 01	Pick-up 0/0	Trip 87BB or 50BF backtrip (fixed)
2	Relay Label 02	Pick-up 0/0	Trip 87BB or 50BF backtrip (fixed)
3	Relay Label 03	Pick-up 0/0	Trip 87BB or 50BF backtrip (fixed)
4	Relay Label 04	Pick-up 0/0	Circuit Breaker failure
5	Relay Label 05	Pick-up 0/0	Circuit Breaker failure or out of service
6	Relay Label 06	Pick-up 0/0	Circuit Breaker failure retrip
7	Relay Label 07	Pick-up 0/0	Trip or Dead Zone Fault
8	Relay Label 08	Pick-up 0/0	Circuit Breaker or Isolator status alarm
9	Relay Label 09	Pick-up 0/0	Circuit Breaker failure retrip phase A
10	Relay Label 10	Pick-up 0/0	Circuit Breaker failure retrip phase B
11	Relay Label 11	Pick-up 0/0	Circuit Breaker failure retrip phase C
12	Relay Label 12	Pick-up 0/0	Not Mapped
13	Relay Label 13	Pick-up 0/0	Not Mapped
14	Relay Label 14	Pick-up 0/0	Not Mapped
15	Relay Label 15	Pick-up 0/0	Not Mapped
16	Relay Label 16	Pick-up 0/0	Not Mapped

Note: It is essential that Relays 1, 2 and 3 are used for tripping purposes as this output is directly driven in the fixed logic to obtain the typical 13ms tripping time.

A fault record can be generated by connecting one or a number of contacts to the “Fault Record Trigger” in PSL. It is recommended that the triggering contact be ‘self reset’ and not a latching. If a latching contact were chosen the fault record would not be generated until the contact had fully reset.

3.24 Function Key Input Mapping

The default mappings for each of the function key inputs are as shown in the following table:

Central Unit P741:

LED Number	Text	Setting	Function
1	FnKey 1	Normal	To reset Zone or CZ circuitry fault
2	FnKey 2	Normal	To reset Zone or CZ PU error fault
3	FnKey 3	Normal	To Disable All protections (CU & PU)
4	FnKey 4	Toggled	To block in Zone 1: 87BB & 50BF
5	FnKey 5	Toggled	To block in Zone 2: 87BB & 50BF
6	FnKey 6	Normal	To reset CU Indications
7	FnKey 7	Normal	To reset CU & PU Indications
8	FnKey 8	Normal	To reset PU Trip Latch
9	FnKey 9	Normal	To trigger the Manual DR
10	FnKey 10	Not Used	Not used

Peripheral Unit P743:

LED Number	Text	Setting	Function
1	FnKey 1	Normal	To reset the Latches
2	FnKey 2	Normal	To reset the Trip Latch
3	FnKey 3	Not Used	Not used
4	FnKey 4	Toggled	To select the 50BF Disable mode
5	FnKey 5	Toggled	To select the Overhaul mode

LED Number	Text	Setting	Function
6	FnKey 6	Not Used	Not used
7	FnKey 7	Not Used	Not used
8	FnKey 8	Not Used	Not used
9	FnKey 9	Not Used	Not used
10	FnKey 10	Not Used	Not used

3.25 Programmable LED Output Mapping

The default mappings for each of the programmable LEDs are as shown in the following table:

Central Unit P741:

LED Number	LED Input Connection/Text	Latched	P74x LED Function Indication
1	LED1 Red LED1 Yellow LED1 Green	Yes	87BB fault on phase A Not used Not used
2	LED2 Red LED2 Yellow LED2 Green	Yes	87BB fault on phase B Not used Not used
3	LED3 Red LED3 Yellow LED3 Green	Yes	87BB fault on phase C Not used Not used
4	LED4 Red LED4 Yellow LED4 Green	Yes	50BF Trip Zone 1 87BB & 50BF Trip Zone 1 87BB Trip Zone 1
5	LED5 Red LED5 Yellow LED5 Green	Yes	50BF Trip Zone 2 87BB & 50BF Trip Zone 2 87BB Trip Zone 2
6	LED6 Red LED6 Yellow LED6 Green	No	Zone 1 blocked by itself Zone 1 blocked by Check Zone Zone 1 protected
7	LED7 Red LED7 Yellow LED7 Green	No	Zone 2 blocked by itself Zone 2 blocked by Check Zone Zone 2 protected
8	LED8 Red LED8 Yellow LED8 Green	No	Fiber communication Error Fiber communication to change Fiber communication healthy
9	FnKey LED1 Red FnKey LED1 Yellow FnKey LED1 Green	No	Zone or CZ circuitry fault block. Zone or CZ circuitry fault alarm No Zone or CZ circuitry fault
10	FnKey LED2 Red FnKey LED2 Yellow FnKey LED2 Green	No	Zone or CZ PU error fault block. Zone or CZ PU error fault alarm No Zone or CZ PU error fault
11	FnKey LED3 Red FnKey LED3 Yellow FnKey LED3 Green	No	All protections Disabled Not used All protections Not Disabled
12	FnKey LED4 Red FnKey LED4 Yellow FnKey LED4 Green	No	Zone 1: 87BB & 50BF blocked Zone 1: 50BF blocked Zone 1: protected
13	FnKey LED5 Red FnKey LED5 Yellow FnKey LED5 Green	No	Zone 2: 87BB & 50BF blocked Zone 2: 50BF blocked Zone 2: protected
14	FnKey LED6 Red FnKey LED6 Yellow FnKey LED6 Green	No	Not used Not used Reset CU Indications

LED Number	LED Input Connection/Text	Latched	P74x LED Function Indication
15	FnKey LED7 Red FnKey LED7 Yellow FnKey LED7 Green	No	Not used Not used Reset CU & PU Indications
16	FnKey LED8 Red FnKey LED8 Yellow FnKey LED8 Green	No	Not used Not used Reset PU Trip Latch
17	FnKey LED9 Red FnKey LED9 Yellow FnKey LED9 Green	No	Not used Not used Manual DR trigger
18	FnKey LED10 Red FnKey LED10 Yellow FnKey LED10 Green	No	Not used Dead Zone fault Not used

Peripheral Unit P742:

LED Number	LED Input Connection/Text	Latched	P74x LED Function Indication
1	LED 1 Red	No	Isolator 1 Closed
2	LED 2 Red	No	Isolator 2 Closed
3	LED 3 Red	No	Isolator 3 Closed
4	LED 4 Red	Yes	Trip on CU 50BF backtrip order
5	LED 5 Red	Yes	Trip on CU 87BB trip order
6	LED 6 Red	Yes	Dead Zone fault
7	LED 7 Red	No	Circuit Breaker out of service
8	LED 8 Red	No	Fiber communication Error

Peripheral Unit P743:

LED Number	LED Input Connection/Text	Latched	P74x LED Function Indication
1	LED1 Red LED1 Yellow LED1 Green	No	Isolator 1 Closed Isolator 1 Status Alarm Isolator 1 Open
2	LED2 Red LED2 Yellow LED2 Green	No	Isolator 2 Closed Isolator 2 Status Alarm Isolator 2 Open
3	LED3 Red LED3 Yellow LED3 Green	No	Isolator 3 Closed Isolator 3 Status Alarm Isolator 3 Open
4	LED4 Red LED4 Yellow LED4 Green	Yes	Trip on CU 50BF backtrip order Not used Not used
5	LED5 Red LED5 Yellow LED5 Green	Yes	Trip on CU 87BB trip order Not used Not used
6	LED6 Red LED6 Yellow LED6 Green	Yes	Dead Zone fault Not used Not used
7	LED7 Red LED7 Yellow LED7 Green	No	Circuit Breaker out of service Not used Circuit Breaker healthy
8	LED8 Red LED8 Yellow LED8 Green	No	Fiber communication Error Fiber communication to change Fiber communication healthy
9	FnKey LED1 Red FnKey LED1 Yellow FnKey LED1 Green	No	Not used Not used Reset PU Indications

LED Number	LED Input Connection/Text	Latched	P74x LED Function Indication
10	FnKey LED2 Red FnKey LED2 Yellow FnKey LED2 Green	No	Not used Not used Reset PU Trip Latch
11	FnKey LED3 Red FnKey LED3 Yellow FnKey LED3 Green	No	Not used
12	FnKey LED4 Red FnKey LED4 Yellow FnKey LED4 Green	No	Not used Mode 50BF disabled Mode normal
13	FnKey LED5 Red FnKey LED5 Yellow FnKey LED5 Green	No	Mode overhaul Not used Mode normal
14	FnKey LED6 Red FnKey LED6 Yellow FnKey LED6 Green	No	Not used
15	FnKey LED7 Red FnKey LED7 Yellow FnKey LED7 Green	No	Not used
16	FnKey LED8 Red FnKey LED8 Yellow FnKey LED8 Green	No	Not used
17	FnKey LED9 Red FnKey LED9 Yellow FnKey LED9 Green	No	Not used
18	FnKey LED10 Red FnKey LED10 Yellow FnKey LED10 Green	No	Not used

3.26 Fault Recorder Start Mapping

The default mapping for the signal which initiates a fault record is as shown in the following table:

Central Unit (P741):

Initiating Signal	Fault Trigger
Trip 87BB	Initiate fault recording from main protection trip
Trip 50BF	Initiate fault recording from main protection trip

Peripheral Unit (P742 and P743):

Initiating Signal	Fault Trigger
Any Trip	Initiate fault recording from main protection trip
Dead zone fault	Initiate fault recording from main protection trip

3.27 PSL Scheme Version Control

To help you keep track of the PSL loaded into products, a version control feature is included. The user interface contains a **PSL DATA** column, which can be used to track PSL modifications. A total of 12 cells are contained in the **PSL DATA** column: 3 for each setting group.

Grp(n) PSL Ref: When downloading a PSL scheme to an IED, you will be prompted to enter the relevant group number and a reference identifier. The first 32 characters of the reference identifier are displayed in this cell. The horizontal cursor keys can scroll through the 32 characters as the LCD display only displays 16 characters.

Example:

Grp. PSL Ref.

Date/time: This cell displays the date and time when the PSL scheme was downloaded to the IED.

Example:

18 Nov 2002
08:59:32.047

Grp(n) PSL ID: This cell displays a unique ID number for the downloaded PSL scheme.

Example:

Grp. 1 PSL
ID - 2062813232

4. VIEWING AND PRINTING PSL DIAGRAMS

You can view and print the PSL diagrams for the device. Typically, these diagrams allow you to see the following mappings:

- Opto Input Mappings
- Output Relay Mappings
- LED Mappings
- Start Indications
- Phase Trip Mappings
- System Check Mapping

To download the default PSL diagrams for the device and to print them:

1. Close the Settings Application Software
2. Start the **Data Model Manager**
3. Click **Add** then **Next**
4. Click **Internet** then **Next**
5. Select your language then click Next
6. From the tree view, select the model and software version
7. Click **Install**. When complete click **OK**
8. Close the Data Model Manager and start the Settings Application Software
9. Select Tools then **PSL Editor (Px40)**
10. In the PSL Editor select **File** then **New** then **Default Scheme**
11. Select the IED type
12. Use the advance button to select the software, then select the model number
13. Highlight the required PSL diagram and select **File** then **Print**

MEASUREMENTS AND RECORDING

CONTENTS

1.	**INTRODUCTION**	**3**
2.	**EVENT RECORDS**	**4**
2.1	**Event Types**	**4**
2.1.1	Opto-input Events	5
2.1.2	Contact Events	5
2.1.3	Alarm Events	5
2.1.4	Alarm List	6
2.1.5	General Events	8
2.1.6	Fault Record Events	8
2.1.7	Maintenance Events	9
2.1.8	Protection Events	9
2.1.9	Security Events	9
2.1.10	Platform Events	9
2.1.11	Setting Changes	9
2.2	**Event Filtering**	**10**
3.	**DISTURBANCE RECORDER**	**11**
4.	**MEASUREMENTS**	**12**
4.1	**Measured Quantities**	**12**
4.1.1	Measured and Calculated Currents	12
4.1.2	Measured and Calculated Voltages	12
4.2	**Measurement Setup**	**12**
4.3	**Measurement Display Quantities**	**12**
5.	**MONITORING TOOLS**	**14**
5.1	**S1 Agile**	**14**
5.2	**Dynamic Synoptic**	**14**

1. INTRODUCTION

The P74x is equipped with integral measurements, event, fault and disturbance recording facilities suitable for analysis of complex system disturbances.

The relay is flexible enough to allow for the programming of these facilities to specific user application requirements and are discussed below.

2. EVENT RECORDS

GE Vernova devices record events in an event log. This allows you to establish the sequence of events that led to a particular situation. For example, a change in a digital input signal or protection element output signal would cause an event record to be created and stored in the event log. This could be used to analyze how a particular power system condition was caused. These events are stored in the IED's non-volatile memory. Each event is time-tagged.

The event records can be displayed on an IED's front panel, but it is easier to view them through the settings application software. This can extract the events log from the device and store it as a single .evt file for analysis on a PC.

The event records are detailed in the **VIEW RECORDS** column. The first event (0) is always the latest event. After selecting the required event, you can scroll through the menus to obtain further details.

If viewing the event with the settings application software, simply open the extracted event file. All the events are displayed chronologically. Each event is summarized with a time stamp (obtained from the **Time & Date** cell) and a short description relating to the event (obtained from the **Event Text** cell. You can expand the details of the event by clicking on the + icon to the left of the time stamp.

The following table shows the correlation between the fields in the setting application software's event viewer and the cells in the menu database.

Field in Event Viewer	Equivalent Cell in Menu DB	Cell Reference	User Settable?
Left hand column header	VIEW RECORDS → Time & Date		No
Right hand column header	VIEW RECORDS → Event Text		No
Description	SYSTEM DATA → Description		Yes
Plant reference	SYSTEM DATA → Plant Reference		Yes
Model number	SYSTEM DATA → Model Number		No
Address	Displays the Courier address relating to the event		No
Event type	VIEW RECORDS → Menu Cell Ref		No
Event value	VIEW RECORDS → Event Value		No
Evt Unique Id	VIEW RECORDS → Evt Unique ID		No

The **Select Event** setting allows access to individual event records, with the latest event stored at position 0. This setting also defines the maximum number of records available.

In addition to the event log, there are two logs which contain duplicates of the last 5 maintenance records and the last 5 fault records. The purpose of this is to provide convenient access to the most recent fault and maintenance events.

2.1 Event Types

There are several different types of event:

- Opto-input events (change of state of opto-input)
- Contact events (change of state of output relay contact)
- Alarm events
- Fault record events
- Standard events
- Security events

Standard events are further sub-categorized internally to include different pieces of information. These are:

- Protection events (starts and trips)
- Maintenance record events
- Platform events

Note: The first event in the list (event 0) is the most recent event to have occurred.

2.1.1 Opto-input Events

If one or more of the opto-inputs has changed state since the last time the protection algorithm ran (which runs several times per cycle), a new event is created, which logs the logic states of all opto-inputs. You can tell which opto-input has changed state by comparing the new event with the previous one.

The description of this event type, as shown in the **Event Text** cell is always **Logic Inputs #** where # is the batch number of the opto-inputs. This is '1', for the first batch of opto-inputs and '2' for the second batch of opto-inputs (if applicable).

The event value shown in the **Event Value** cell for this type of event is a binary string. This shows the logical states of the opto-inputs, where the Least Significant Bit (LSB), on the right corresponds to the first opto-input Input L1.

The same information is also shown in the **Opto I/P Status** cell in the **SYSTEM DATA** column. This information is updated continuously, whereas the information in the event log is a snapshot at the time when the event was created.

2.1.2 Contact Events

If one or more output relays (also known as output contacts) have changed state since the last time the protection algorithm ran (which runs at several times per cycle), a new event is created, which logs the logic states of all output relays. You can tell which output relay has changed state by comparing the new event with the previous one.

The description of this event type, as shown in the **Event Text** cell is **always Output Contacts #** where # is the batch number of the output relay contacts. This is '1', for the first batch of output contacts and '2' for the second batch of output contacts (if applicable).

The event value shown in the **Event Value** cell for this type of event is a binary string. This shows the logical states of the output relays, where the LSB (on the right) corresponds to the first output contact **Output R1**.

The same information is also shown in the **Relay O/P Status** cell in the **SYSTEM DATA** column. This information is updated continuously, whereas the information in the event log is a snapshot at the time when the event was created.

2.1.3 Alarm Events

The IED monitors itself on power up and continually thereafter. If it notices any problems, it will register an alarm event.

The description of this event type, as shown in the **Event Text** cell is cell dependent on the type of alarm and will be one of those shown in the following tables, followed by **OFF** or **ON**.

The event value shown in the **Event Value** cell for this type of event is a 32-bit binary string. There are one or more banks 32-bit registers, depending on the device model. These contain all the alarm types and their logic states (**ON** or **OFF**).

The same information is also shown in the **Alarm Status (n)** cells in the **SYSTEM DATA** column. This information is updated continuously, whereas the information in the event log is a snapshot at the time when the event was created.

2.1.4 Alarm List

Alarm	P741	P742	P743
Alarm Status 1			
Bit 0	Unused	Unused	Unused
Bit 1	Unused	Unused	Unused
Bit 2	Ext Trip 50BF	Breaker Failure	Breaker Failure
Bit 3	Fibre Com Worn	Offset Chan ABCN	Offset Chan ABCN
Bit 4	All Prot Blocked	Fibre Com Error	Fibre Com Error
Bit 5	Fibre Com Error	Fibre Com Worn	Fibre Com Worn
Bit 6	Circt Flt Alm Zx	PU CT Fail IN	PU CT Fail IN
Bit 7	Locking Level 1	CB Status Alarm	CB Status Alarm
Bit 8	Locking Level 2	Man CB Trip Fail	Man CB Trip Fail
Bit 9	Circt Flt Lck Zx	Man CB Cls Fail	Man CB Cls Fail
Bit 10	PU Error Alm Zx	Current Overflow	Current Overflow
Bit 11	PU Error Lck Zx	Dead Zone Fault	Dead Zone Fault
Bit 12	SEF Blocked	Config Error	Config Error
Bit 13	Circt Flt Alm CZ	All Prot Blocked	All Prot Blocked
Bit 14	Circt Flt Lck CZ	PU Overhaul Mode	PU Overhaul Mode
Bit 15	PU Error Alm CZ	50BF Disabled	50BF Disabled
Bit 16	PU Error Lck CZ	Q1 Status Alarm	Q1 Status Alarm
Bit 17	Config Error	Q2 Status Alarm	Q2 Status Alarm
Bit 18	User Alarm 1	Q3 Status Alarm	Q3 Status Alarm
Bit 19	User Alarm 2	Q4 Status Alarm	Q4 Status Alarm
Bit 20	User Alarm 3	Q5 Status Alarm	Q5 Status Alarm
Bit 21	User Alarm 4	Q6 Status Alarm	Q6 Status Alarm
Bit 22	User Alarm 5	General Alarm	General Alarm
Bit 23	User Alarm 6	CT Fail	CT Fail
Bit 24	User Alarm 7	Alarm 25 Active	Alarm 25 Active
Bit 25	User Alarm 8	Alarm 26 Active	Alarm 26 Active
Bit 26	General Alarm	Alarm 27 Active	Alarm 27 Active
Bit 27	87BB 3Ph Blocked	Alarm 28 Active	Alarm 28 Active
Bit 28	Alarm 29 Active	Alarm 29 Active	Alarm 29 Active
Bit 29	Alarm 30 Active	Alarm 30 Active	Alarm 30 Active
Bit 30	Alarm 31 Active	Alarm 31 Active	Alarm 31 Active
Bit 31	Alarm 32 Active	Alarm 32 Active	Alarm 32 Active
Alarm Status 2			
Bit 0	Alarm 33 Active	User Alarm 1	User Alarm 1
Bit 1	Alarm 34 Active	User Alarm 2	User Alarm 2
Bit 2	Alarm 35 Active	User Alarm 3	User Alarm 3
Bit 3	Alarm 36 Active	User Alarm 4	User Alarm 4
Bit 4	Alarm 37 Active	User Alarm 5	User Alarm 5
Bit 5	Alarm 38 Active	User Alarm 6	User Alarm 6
Bit 6	Alarm 39 Active	User Alarm 7	User Alarm 7
Bit 7	Alarm 40 Active	Alarm 40 Active	Alarm 40 Active
Bit 8	Alarm 41 Active	Alarm 41 Active	Alarm 41 Active
Bit 9	Alarm 42 Active	Alarm 42 Active	Alarm 42 Active
Bit 10	Alarm 43 Active	Alarm 43 Active	Alarm 43 Active

Alarm	P741	P742	P743
Bit 11	Alarm 44 Active	Alarm 44 Active	Alarm 44 Active
Bit 12	Alarm 45 Active	Alarm 45 Active	Alarm 45 Active
Bit 13	Alarm 46 Active	Alarm 46 Active	Alarm 46 Active
Bit 14	Alarm 47 Active	Alarm 47 Active	Alarm 47 Active
Bit 15	Alarm 48 Active	Alarm 48 Active	Alarm 48 Active
Bit 16	Alarm 49 Active	Alarm 49 Active	Alarm 49 Active
Bit 17	Alarm 50 Active	Alarm 50 Active	Alarm 50 Active
Bit 18	Alarm 51 Active	Alarm 51 Active	Alarm 51 Active
Bit 19	Alarm 52 Active	Alarm 52 Active	Alarm 52 Active
Bit 20	Alarm 53 Active	Alarm 53 Active	Alarm 53 Active
Bit 21	Alarm 54 Active	Alarm 54 Active	Alarm 54 Active
Bit 22	Alarm 55 Active	Alarm 55 Active	Alarm 55 Active
Bit 23	Alarm 56 Active	Alarm 56 Active	Alarm 56 Active
Bit 24	Alarm 57 Active	Alarm 57 Active	Alarm 57 Active
Bit 25	Alarm 58 Active	Alarm 58 Active	Alarm 58 Active
Bit 26	Alarm 59 Active	Alarm 59 Active	Alarm 59 Active
Bit 27	Alarm 60 Active	Alarm 60 Active	Alarm 60 Active
Bit 28	Alarm 61 Active	Alarm 61 Active	Alarm 61 Active
Bit 29	Alarm 62 Active	Alarm 62 Active	Alarm 62 Active
Bit 30	Alarm 63 Active	Alarm 63 Active	Alarm 63 Active
Bit 31	Alarm 64 Active	Alarm 64 Active	Alarm 64 Active
Alarm Status 3			
Bit 0	Battery Fail	Battery Fail	Battery Fail
Bit 1	Field Voltage Fail	Field Voltage Fail	Field Voltage Fail
Bit 2	Unused	Unused	Unused
Bit 3	GOOSE IED Absent	Unused	GOOSE IED Absent
Bit 4	NIC Not Fitted	Unused	NIC Not Fitted
Bit 5	NIC No Response	Unused	NIC No Response
Bit 6	NIC Fatal Error	Unused	NIC Fatal Error
Bit 7	NIC Soft. Reload	Unused	NIC Soft. Reload
Bit 8	Bad TCP/IP Cfg.	Unused	Bad TCP/IP Cfg.
Bit 9	Bad OSI Config.	Unused	Bad OSI Config.
Bit 10	NIC Link Fail	Unused	NIC Link Fail
Bit 11	NIC SW Mis-Match	Unused	NIC SW Mis-Match
Bit 12	IP Addr Conflict	Unused	IP Addr Conflict
Bit 13	Unused	Unused	Unused
Bit 14	Unused	Unused	Unused
Bit 15	Unused	Unused	Unused
Bit 16	Unused	Unused	Unused
Bit 17	Backup Setting	Backup Setting	Backup Setting
Bit 18	Unused	Unused	Unused
Bit 19	Unused	Unused	Unused
Bit 20	Unused	Unused	Unused
Bit 21	Unused	Unused	Unused
Bit 22	Unused	Unused	Unused
Bit 23	Unused	Unused	Unused
Bit 24	Unused	Unused	Unused
Bit 25	Unused	Unused	Unused
Bit 26	Unused	Unused	Unused

Alarm	P741	P742	P743
Bit 27	Unused	Unused	Unused
Bit 28	Unused	Unused	Unused
Bit 29	Unused	Unused	Unused
Bit 30	Unused	Unused	Unused
Bit 31	Unused	Unused	Unused

2.1.5 General Events

Several events come under the heading of 'General Events'. An example is shown below:

Nature of Event	Displayed Text in Event Record	Displayed Value
Level 1 password modified, either from user interface, front or rear port.	PW1 modified UI, F, R or R2	0 UI=6, F=11, R=16, R2=38

A complete list of the 'General Events' is given in the Relay Menu Database, which is a separate document available on request.

2.1.6 Fault Record Events

An event record is created for every fault the IED detects. This is also known as a fault record.

The event type description shown in the **Event Text** cell for this type of event is always **Fault Recorded**.

The IED contains a separate register containing the latest fault records. This provides a convenient way of viewing the latest fault records and saves searching through the event log. You access these fault records using the **Select Fault** setting, where fault number 0 is the latest fault.

A fault record is triggered by the **Fault REC TRIG** signal DDB, which is assigned in the PSL. The fault recorder records the values of all parameters associated with the fault for the duration of the fault. These parameters are stored in separate Courier cells, which become visible depending on the type of fault.

The fault recorder stops recording only when:

The Start signal is reset AND the undercurrent is ON OR the Trip signal is reset, as shown below:

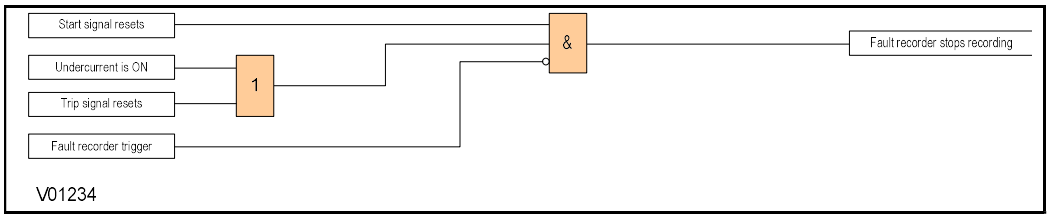

Figure 1: Fault recorder stop conditions

The event is logged as soon as the fault recorder stops. The time stamp assigned to the fault corresponds to the start of the fault. The timestamp assigned to the fault record event corresponds to the time when the fault recorder stops.

Note: We recommend that you do not set the triggering contact to latching. This is because if you use a latching contact, the fault record will not be generated until the contact has been fully reset.

2.1.7 Maintenance Events

Internal failures detected by the self-test procedures are logged as maintenance records. Maintenance records are special types of standard events.

The event type description shown in the **Event Text** cell for this type of event is always **Maint Recorded**.

The **Event Value** cell also provides a unique binary code.

The IED contains a separate register containing the latest maintenance records. This provides a convenient way of viewing the latest maintenance records and saves searching through the event log. You access these fault records using the **Select Maint** setting.

The maintenance record has several extra menu cells relating to the maintenance event. These parameters are **Maint Text**, **Maint Type** and **Maint Data**. They contain details about the maintenance event selected with the **Select Maint** cell.

2.1.8 Protection Events

The IED logs protection starts and trips as individual events. Protection events are special types of standard events.

The event type description shown in the **Event Text** cell for this type of event is dependent on the protection event that occurred. Each time a protection event occurs, a DDB signal changes state. It is the name of this DDB signal followed by 'ON' or 'OFF' that appears in the **Event Text** cell.

The **Event Value** cell for this type of event is a 32-bit binary string representing the state of the relevant DDB signals. These binary strings can also be viewed in the **COMMISSION TESTS** column in the relevant DDB batch cells.

Not all DDB signals can generate an event. Those that can are listed in the **RECORD CONTROL** column. In this column, you can set which DDBs generate events.

2.1.9 Security Events

An event record is generated each time a setting that requires an access level is executed.

The event type description shown in the **Event Text** cell displays the type of change.

2.1.10 Platform Events

Platform events are special types of standard events.

The event type description shown in the **Event Text** cell displays the type of change.

2.1.11 Setting Changes

Changes to any setting within the relay are logged as an event. Two examples are shown in the following table:

Type of Setting Change	Displayed Text in Event Record	Displayed Value
Control/Support Setting	C & S Changed	22
Group # Change	Group # Changed	#

Where # = 1 to 4

Note: Control/Support settings are communications, measurement, CT/VT ratio settings etc. which are not duplicated within the four setting groups. When any of these settings are changed, the event record is created simultaneously. However, changes to protection or disturbance recorder settings will only generate an event once the settings have been confirmed at the ‘setting trap’.

2.2 Event Filtering

Event reporting can be disabled from all interfaces that supports setting changes. The settings that control the various types of events are in the record control column. The effect of setting each to disabled is as follows:

Menu Text	Default Setting	Available Settings
RECORD CONTROL		
Clear Events	No	No or Yes
Selecting **Yes** will cause the existing event log to be cleared, and an event will be generated indicating that the events have been erased.		
Clear Faults	No	No or Yes
Selecting **Yes** will cause the existing fault records to be erased from the relay.		
Clear Test Log	No	No or Yes
Selecting **Yes** will cause the existing maintenance records to be erased from the relay.		
Alarm Event	No	No/Yes
Disabling this setting means that no event will be generated for all alarms.		
Output Event	No	No/Yes
Disabling this setting means that no event will be generated for any change in relay output contact state.		
Opto Input Event	No	No/Yes
Disabling this setting means that no event will be generated for any change in logic input state.		
Relay Sys Event	No	No/Yes
Disabling this setting means that no General Events will be generated.		
Fault Rec Event	No	No/Yes
Disabling this setting means that no event will be generated for any fault that produces a fault record.		
Maint. Rec Event	No	No/Yes
Disabling this setting means that no event will be generated for any maintenance records.		
Protection Event	No	No/Yes
Disabling this setting means that no event will be generated for any operation of the protection elements.		
DDB 31 - 0	11111111111111111111111111111111	
32-bit setting to enable or disable the event recording for DDBs 0-31. For each bit 1 = event recording Enabled, 0 = event recording Disabled.		
DDB 1022 - 992	11111111111111111111111111111111	
32-bit setting to enable or disable the event recording for DDBs 1022 – 992. For each bit 1 = event recording Enabled, 0 = event recording Disabled. There are similar cells showing 32-bit binary strings for all DDBs from 0 - 1022. The first and last 32-bit binary strings only are shown here.		
Clear Dist Recs	No	No/Yes
Clears all stored disturbance records from the relay		

Note: Some occurrences will result in more than one type of event, for example a supercapacitor failure will produce an alarm event and a maintenance record event.

If the Protection Event setting is Enabled a further set of settings is revealed which allow the event generation by individual DDB signals to be enabled or disabled.

3. DISTURBANCE RECORDER

The disturbance recorder feature allows you to record selected current and voltage inputs to the protection elements, together with selected digital signals. The digital signals may be inputs, outputs, or internal DDB signals. The disturbance records can be extracted using the disturbance record viewer in the settings application software. The disturbance record file can also be stored in the COMTRADE format. This allows the use of other packages to view the recorded data.

The integral disturbance recorder has an area of memory specifically set aside for storing disturbance records. The number of records that can be stored is dependent on the recording duration. The minimum duration is 0.1 s and the maximum duration is 10.5 s.

When the available memory is exhausted, the oldest records are overwritten by the newest ones.

Each disturbance record consists of a number of analogue data channels and digital data channels. The relevant CT and VT ratios for the analogue channels are also extracted to enable scaling to primary quantities.

The fault recording times are set by a combination of the **Duration** and **Trigger Position** cells. The **Duration** cell sets the overall recording time, and the **Trigger Position** cell sets the trigger point as a percentage of the duration. For example, the default settings show that the overall recording time is set to 1.5 s with the trigger point being at 33.3% of this, giving 0.5 s pre-fault and 1 s post fault recording times.

With the **Trigger Mode** set to **Single**, if further triggers occur whilst a recording is taking place, the recorder will ignore the trigger. However, with the **Trigger Mode** set to **Extended**, the post trigger timer will be reset to zero, extending the recording time.

You can select any of the IED's analogue inputs as analogue channels to be recorded. You can also map any of the opto-inputs output contacts to the digital channels. In addition, you may also map a number of DDB signals such as Starts and LEDs to digital channels.

You may choose any of the digital channels to trigger the disturbance recorder on either a low to high or a high to low transition, via the **Input Trigger** cell. The default settings are such that any dedicated trip output contacts will trigger the recorder.

It is not possible to view the disturbance records locally via the front panel LCD. You must extract these using suitable setting application software such as MiCOM S1 Agile.

This process is fully explained in the SCADA Communications chapter, *P24x/EN SC*.

4. MEASUREMENTS

4.1 Measured Quantities

The device measures directly and calculates a number of system quantities, which are updated every second. You can view these values in the relevant **MEASUREMENT** columns or with the Measurement Viewer in the settings application software. Depending on the model, the device may measure and display some or more of the following quantities:

- Measured and calculated analogue current and voltage values

4.1.1 Measured and Calculated Currents

The device measures phase-to-phase and phase-to-neutral current values. The values are produced by sampling the analogue input quantities, converting them to digital quantities to present the magnitude and phase values. Sequence quantities are produced by processing the measured values. These are also displayed as magnitude and phase angle values.

These measurements are contained in the **MEASUREMENTS 1** column.

4.1.2 Measured and Calculated Voltages

The device measures phase-to-phase and phase-to-neutral voltage values. The values are produced by sampling the analogue input quantities, converting them to digital quantities to present the magnitude and phase values.

Sequence quantities are produced by processing the measured values. These are also displayed as magnitude and phase angle values.

These measurements are contained in the **MEASUREMENTS 1** column.

4.2 Measurement Setup

You can define the way measurements are set up and displayed using the **MEASURE'T SETUP** column and the measurements are shown in the relevant **MEASUREMENTS** tables.

4.3 Measurement Display Quantities

To view the measurement quantities, go to the **MEASUREMENT** and **TOPOLOGY** columns. These can also be viewed with S1 Agile.

P741:

MEASUREMENTS 1	MEASUREMENTS 2	TOPOLOGY 1	TOPOLOGY 2
IA Diff CZ	Z01 : IA diff	Current Node 1	Current Node 1
IB Diff CZ	Z01 : IB diff	If existing:	If existing:
IC Diff CZ	Z01 : IC diff	Current Node 2	Current Node 2
IN Diff CZ	Z01 : IN diff	Current Node 3	Current Node 3
IA Bias CZ	Z01 : IA bias	Current Node 4	Current Node 4
IB Bias CZ	Z01 : IB bias	Current Node 5	Current Node 5
IC Bias CZ	Z01 : IC bias	Current Node 6	Current Node 6
IN Bias CZ	Z01 : IN bias	Current Node 7	Current Node 7
	If existing:	Current Node 8	Current Node 8
	Z02 : IA diff		
	Z02 : IB diff		
	Z02 : IC diff		
	Z02 : IN diff		
	Z02 : IA bias		
	Z02 : IB bias		

MEASUREMENTS 1	MEASUREMENTS 2	TOPOLOGY 1	TOPOLOGY 2
	Z02 : IC bias		
	Z02 : IN bias		
	…		
	Z08 : IA diff		
	Z08 : IB diff		
	Z08 : IC diff		
	Z08 : IN diff		
	Z08 : IA bias		
	Z08 : IB bias		
	Z08 : IC bias		
	Z08 : IN bias		

P742 or P743:

MEASUREMENTS 1	TOPOLOGY 1
IA Magnitude	Link CT/Zone
IA Phase Angle	Zx1: IA Diff
IB Magnitude	Zx1: IB Diff
IB Phase Angle	Zx1: IC Diff
IC Magnitude	Zx1: IN Diff
IC Phase Angle	Zx1: IA Bias
IN Magnitude	Zx1: IB Bias
IN Phase Angle	Zx1: IC Bias
IN Derived Magn	Zx1: IN Bias
IN Derived Angle	Zx2: IA Diff
Frequency	Zx2: IB Diff
	Zx2: IC Diff
	Zx2: IN Diff
	Zx2: IA Bias
	Zx2: IB Bias
	Zx2: IC Bias
	Zx2: IN Bias

5. MONITORING TOOLS

5.1 S1 Agile

The embedded standard S1 Agile software monitoring is designed for 8 zones substation. Consequently, if you open connection with P741 which protects 4 zones substation, there are error messages to inform you that cells corresponding to topology and measurements of zone 5 to 8 cannot be displayed.

You can use the monitor tool even if this error message appears.

To remove an error message, you must remove cells in the default file:
Open file celllist.txt with text editor (for example notepad). This file is in directory Monitor in the path of S1 Agile install.

Go to line [P741], referring to the menu database documentation.
Remove addresses of cell that you don't want to display after the line/Measurement. For example, to remove cell [Topology 1, Current node 5], delete line 0405.

Save file:
Later, if you want to display a new zone, perform the reverse operation.

5.2 Dynamic Synoptic

A dedicated software monitoring tool has been developed which allows the user to display on a PC (desktop or laptop) the substation busbar scheme and monitor the status of the isolators, breakers and CTs as well as analogue measurements and digital values.

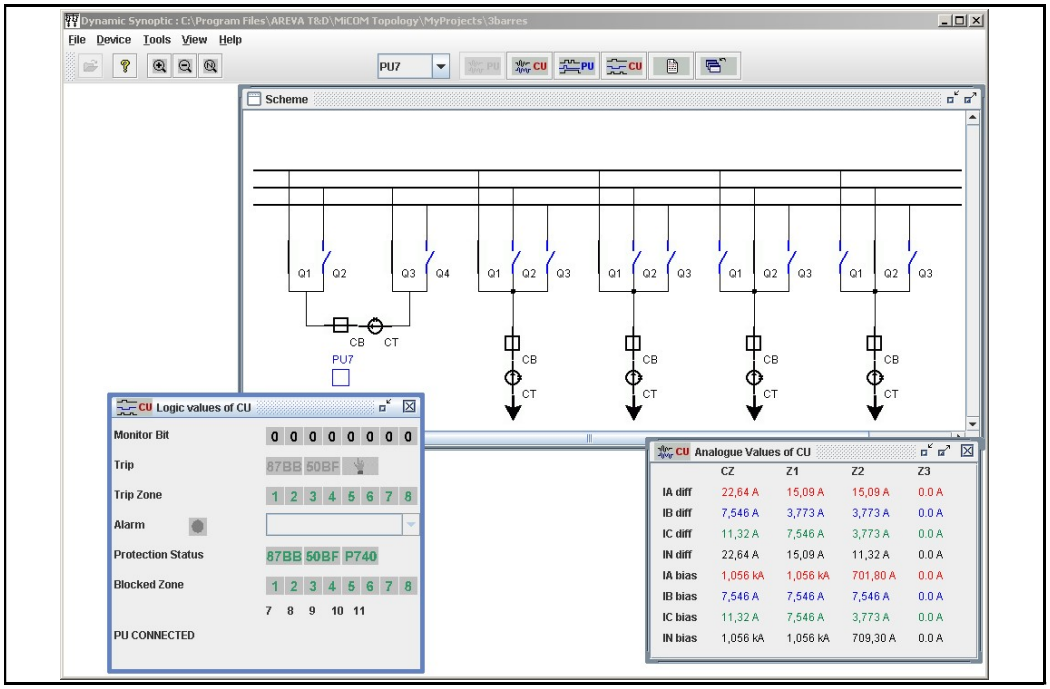

Figure 2: Connected to the central unit

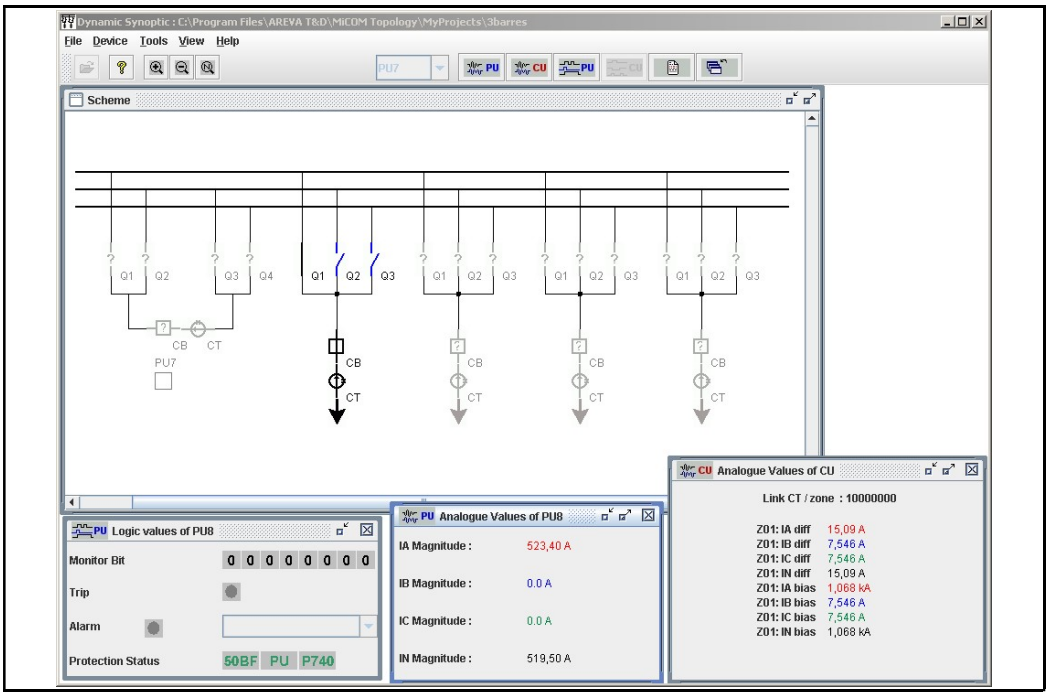

Figure 3: Connected to a peripheral unit

FIRMWARE DESIGN

CONTENTS

1.	**HARDWARE ARCHITECTURE**	**3**
1.1	**Coprocessor Hardware Architecture**	**3**
2.	**MECHANICAL IMPLEMENTATION**	**5**
2.1	**Housing Variants**	**5**
2.2	**List of Boards**	**5**
3.	**BOARDS AND MODULES**	**7**
3.1	**PCBs**	**7**
3.2	**Subassemblies**	**7**
3.3	**Main Processor Board**	**8**
3.4	**Power Supply Board**	**8**
3.4.1	Watchdog	10
3.4.2	Rear Serial Port	10
3.5	**Input Module - 1 Transformer Board**	**11**
3.5.1	Input Module Circuit Description	12
3.6	**Transformer Board**	**13**
3.7	**Input Board**	**14**
3.8	**Standard Output Relay Board**	**15**
3.9	**IRIG-B Board**	**16**
3.10	**Fibre Optic Board**	**16**
3.11	**Rear Communication Board**	**17**
3.12	**Redundant Ethernet Board (Hardware Option R/S/T)**	**17**
3.13	**Single Ethernet Board (Hardware Option U)**	**19**
3.14	**Redundant Ethernet Board (Hardware Option W/Y)**	**20**
3.15	**Retrofit of Ethernet Cards Hardware Option R/S/T with Hardware Option U/W/Y**	**21**
3.16	**Coprocessor Board**	**23**
3.16.1	Current Differential Inputs	23
3.17	**High Break Output Relay Board**	**24**
4.	**SOFTWARE DESIGN OVERVIEW**	**26**
5.	**SYSTEM LEVEL SOFTWARE**	**27**
5.1	**Real-time Operating System**	**27**
5.2	**System Services Software**	**27**
5.3	**Self-diagnostic Software**	**27**
5.4	**Startup Self-testing**	**27**
5.4.1	System Boot	27
5.4.2	System Level Software Initialization	28
5.4.3	Platform Software Initialization & Monitoring	28
5.5	**Continuous Self-testing**	**28**

6. PLATFORM SOFTWARE 30

6.1 Record Logging 30

6.2 Settings Database 30

6.3 Interfaces 30

7. PROTECTION AND CONTROL FUNCTIONS 31

7.1 Acquisition of Samples 31

7.2 Frequency Tracking 31

7.2.1 Topology Software 31

7.2.2 Signal Processing 31

7.2.3 Programmable Scheme Logic 32

7.2.4 Event Recording 32

7.2.5 Disturbance Recorder 33

7.2.6 Function Key Interface (P741 and P743) 33

1. HARDWARE ARCHITECTURE

The main components comprising devices based on the Px4x platform are as follows:

- The housing, consisting of a front panel and connections at the rear
- The Main processor module consisting of the main CPU (Central Processing Unit), memory and an interface to the front panel HMI (Human Machine Interface)
- A selection of plug-in boards and modules with presentation at the rear for the power supply, communication functions, digital I/O, analogue inputs, and time synchronization connectivity

All boards and modules are connected by a parallel data and address bus, which allows the processor module to send and receive information to and from the other modules as required. There is also a separate serial data bus for conveying sampled data from the input module to the CPU. These parallel and serial databuses are shown as a single interconnection module in the following figure, which shows typical modules and the flow of data between them.

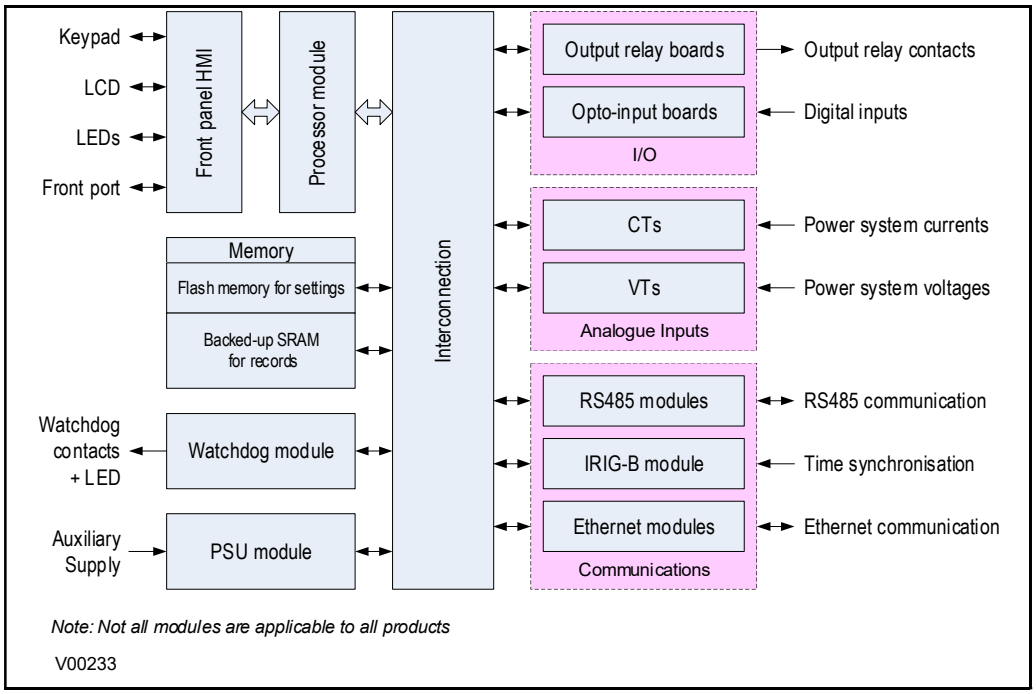

Figure 1: Hardware architecture

1.1 Coprocessor Hardware Architecture

Some products are equipped with a coprocessor board for extra computing power. There are several variants of coprocessor board, depending on the required communication requirements. Some models do not need any external communication inputs, some models need inputs for current differential functionality, and some models need an input for GPS time synchronization.

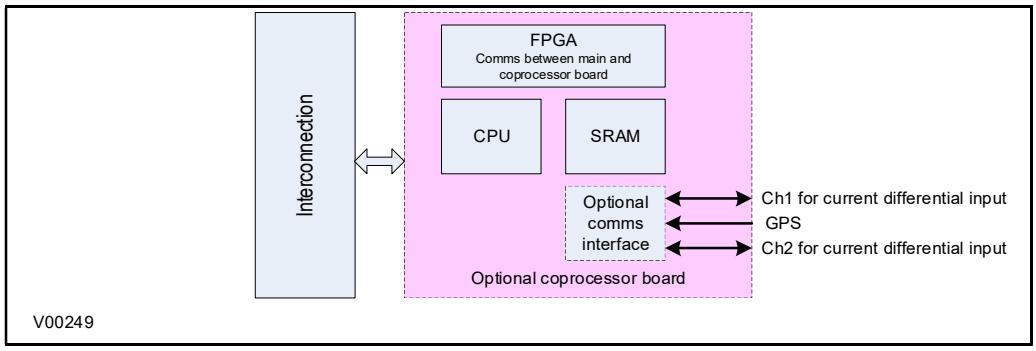

Figure 2: Coprocessor hardware architecture

2. MECHANICAL IMPLEMENTATION

All products based on the Px4x platform have common hardware architecture. The hardware is modular and consists of the following main parts:

- Case and terminal blocks
- Boards and modules
- Front panel

The case comprises the housing metalwork and terminal blocks at the rear. The boards fasten into the terminal blocks and are connected by a ribbon cable. This ribbon cable connects to the processor in the front panel.

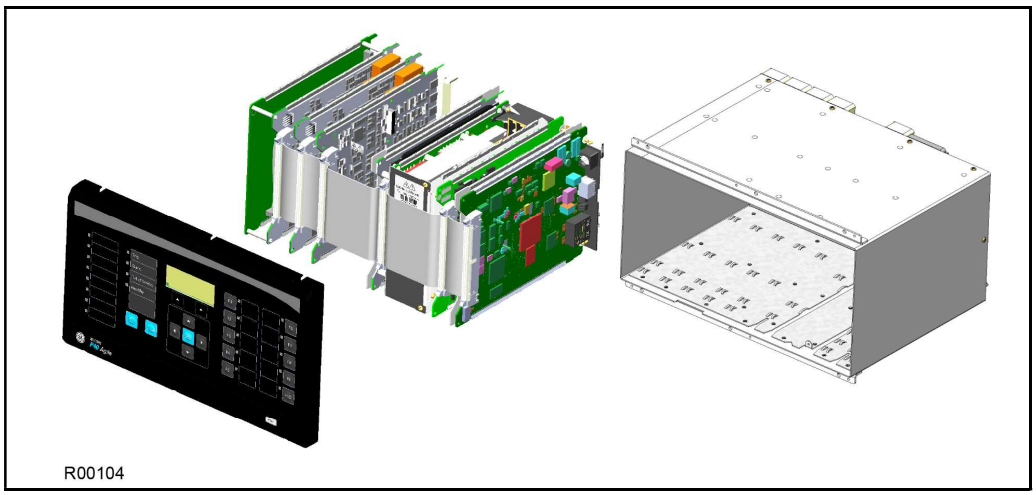

Figure 3: Exploded view of IED

2.1 Housing Variants

The Px4x range of products are implemented in a range of case sizes. Case dimensions for industrial products usually follow modular measurement units based on rack sizes. These are: U for height and TE for width, where:

- 1U = 1.75 inches = 44.45 mm
- 1TE = 0.2 inches = 5.08 mm

The products are available in panel-mount or standalone versions. All products are nominally 4U high. This equates to 177.8 mm or 7 inches.

The cases are pre-finished steel with a conductive covering of aluminium and zinc. This provides good grounding at all joints, providing a low resistance path to earth that is essential for performance in the presence of external noise.

The case width depends on the product type and its hardware options. There are three different case widths for the range of products described: 40TE, 60TE and 80TE. The case dimensions and compatibility criteria are as follows:

Case Width (TE)	Case Width (mm)	Case Width (inches)
40TE	203.2	8
40TE	304.8	12
40TE	406.4	16

Note: Not all case sizes are available for all models.

2.2 List of Boards

The product's hardware consists of several modules drawn from a standard range. The exact specification and number of hardware modules depends on the model number and variant. Depending on the exact model, the product in question will use a selection of the following boards.

Board	Use
Main Processor board - 40TE or smaller	Main Processor board - without support for function keys
Main Processor board - 60TE or larger	Main Processor board - with support for function keys
Power supply board 24/54V DC	Power supply input. Accepts DC voltage between 24V and 54V
Power supply board - 48/125V DC	Power supply input. Accepts DC voltage between 48V and 125V
Power supply board 110/250V DC	Power supply input. Accepts DC voltage between 110V and 125V
Transformer board	Contains the voltage and current transformers
Input board	Contains the A/D conversion circuitry
Input board with opto-inputs	Contains the A/D conversion circuitry + 8 digital opto-inputs
IRIG-B board - modulated	Interface board for modulated IRIG-B timing signal
IRIG-B - demodulated input	Interface board for demodulated IRIG-B timing signal
Fibre board	Interface board for fibre-based RS485 connection
Fibre + IRIG-B	Interface board for fibre-based RS485 connection + demodulated IRIG-B
2nd rear communications board	Interface board for RS232 / RS485 connections
2nd rear communications board with IRIG-B input	Interface board for RS232 / RS485 + IRIG-B connections
100 MHz Ethernet board	Standard 100 Mbps Ethernet board for LAN connection (fibre + copper)
100 MHz Ethernet board with modulated IRIG-B	Standard 100 Mbps Ethernet board (fibre/copper) + modulated IRIG-B
100 MHz Ethernet board with demodulated IRIG-B	Standard 100 Mbps Ethernet board (fibre/copper)+ demodulated IRIG-B
High-break output relay board	Output relay board with high breaking capacity relays
Redundant Ethernet RSTP + PRP + HSR + Failover + universal IRIG-B	2 ST duplex redundant Ethernet ports running RSTP + PRP + HSR + Failover (two fibre pairs), with onboard universal IRIG-B (Hardware option R)
Redundant Ethernet RSTP + PRP + HSR + Failover + universal IRIG-B	2 RJ45 duplex redundant Ethernet ports running RSTP + PRP + HSR + Failover (two copper pairs), with on-board universal IRIG-B (Hardware option S)
Single Ethernet RSTP + PRP + HSR + Failover + universal IRIG-B	Single Ethernet port running RSTP + PRP + HSR + Failover (one copper, RJ45 one ST multi-mode fibre optic), with on-board universal IRIG-B (Hardware option T)
Single Ethernet, universal IRIG-B, IEEE1588	Single LC duplex Ethernet port (one LC multi-mode fibre optic) with universal IRIG-B (Hardware option U)
Redundant Ethernet RSTP + PRP + HSR + Failover + universal IRIG-B	2 RJ45 duplex redundant Ethernet ports running RSTP + PRP + HSR + Failover (two copper pairs), with on-board universal IRIG-B (Hardware option W)
Redundant Ethernet RSTP + PRP + HSR + Failover + universal IRIG-B	2 LC duplex redundant Ethernet ports running RSTP + PRP + HSR + Failover (two fibre pairs), with on-board universal IRIG-B (Hardware option Y)
Output relay output board (8 outputs)	Standard output relay board with 8 outputs
Coprocessor board with dual fibre inputs	Coprocessor board with fibre connections for current differential inputs

3. BOARDS AND MODULES

Each product comprises a selection of PCBs (Printed Circuit Boards) and subassemblies, depending on the chosen configuration.

3.1 PCBs

A PCB typically consists of components, a front connector for connecting into the main system parallel bus via a ribbon cable, and an interface to the rear. This rear interface may be:

- Directly presented to the outside world (as is the case for communication boards such as Ethernet Boards)
- Presented to a connector, which in turn connects into a terminal block bolted onto the rear of the case (as is the case for most of the other board types)

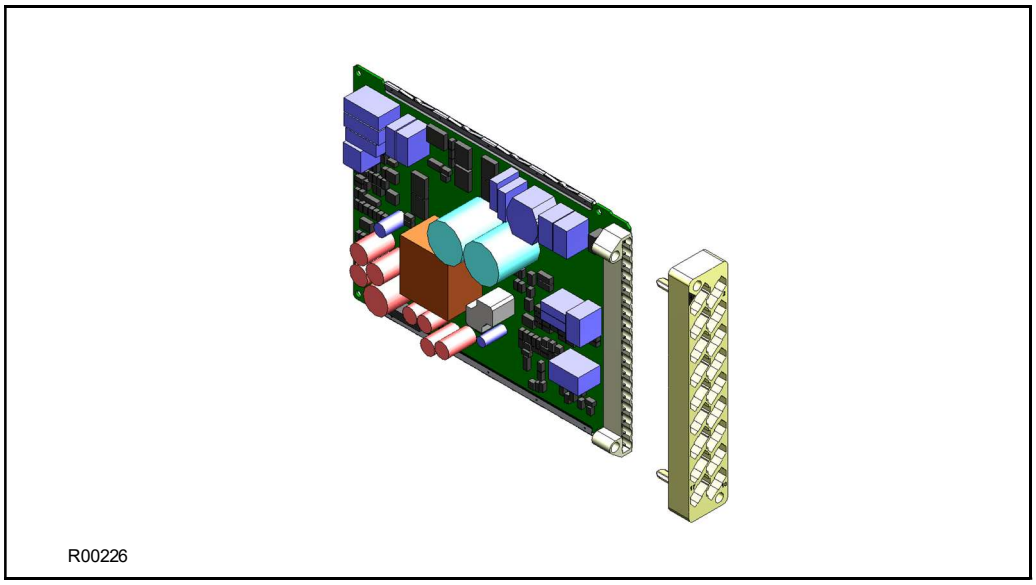

Figure 4: Rear connection to terminal block

3.2 Subassemblies

A sub-assembly consists of two or more boards bolted together with spacers and connected with electrical connectors. It may also have other special requirements such as being encased in a metal housing for shielding against electromagnetic radiation.

Boards are designated by a part number beginning with ZN, whereas pre-assembled sub-assemblies are designated with a part number beginning with GN. Sub-assemblies, which are put together at the production stage, do not have a separate part number.

The products in the Px40 series typically contain two sub-assemblies:

- The power supply assembly comprising:
  - A power supply board
  - An output relay board
- The input module comprising:
  - One or more transformer boards, which contains the voltage and current transformers (partially or fully populated)
  - One or more input boards
  - Metal protective covers for EM (electromagnetic) shielding

The input module is pre-assembled and is therefore assigned a GN number, whereas the power supply module is assembled at production stage and does not therefore have an individual part number.

3.3 Main Processor Board

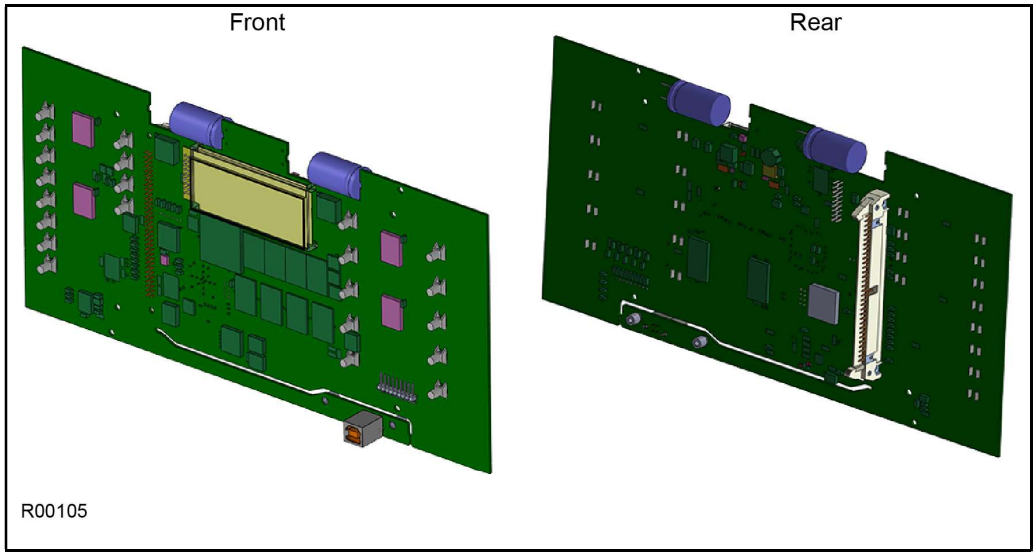

Figure 5: Main Processor Board

The main processor board performs all calculations and controls the operation of all other modules in the IED, including the data communication and user interfaces. This is the only board that does not fit into one of the slots.

It resides in the front panel and connects to the rest of the system using an internal ribbon cable.

The LCD and LEDs are mounted on the processor board along with the front panel communication ports.

The memory on the main processor board is split into two categories: volatile and non-volatile. The volatile memory is fast access SRAM, used by the processor to run the software and store data during calculations. The non-volatile memory is sub-divided into two groups:

- Flash memory to store software code, text and configuration data including the present setting values.
- Supercapacitor backed SRAM to store disturbance, event, fault and maintenance record data.

There are two board types available depending on the size of the case:

- For models in 40TE cases
- For models in 60TE cases and larger

3.4 Power Supply Board

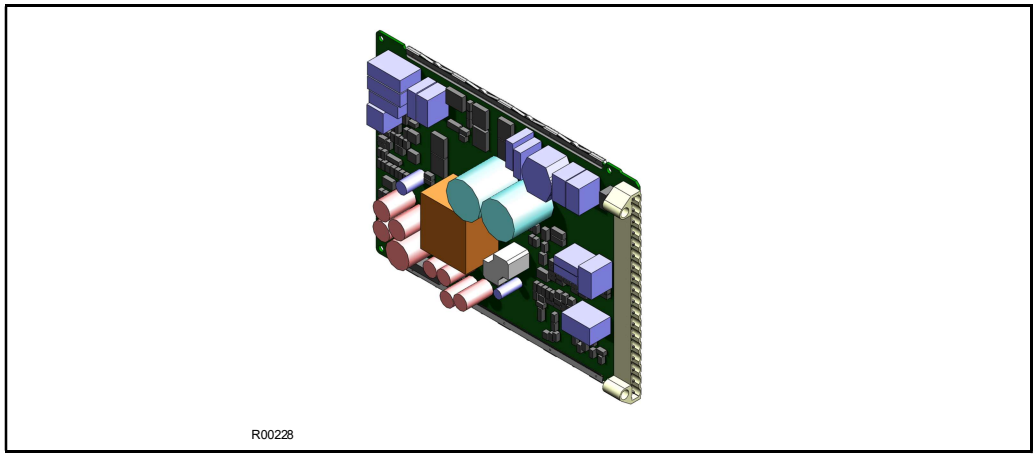

Figure 6: Power Supply Board

The power supply board provides power to the unit. One of three different configurations of the power supply board can be fitted to the unit. This is specified at the time of order and depends on the magnitude of the supply voltage that will be connected to it.

There are three board types, which support the following voltage ranges:

- 24/54 V DC
- 48/125 V DC or 40-100V AC
- 110/250 V DC or 100-240V AC

The power supply board connector plugs into a medium duty terminal block. This terminal block is always positioned on the right-hand side of the unit looking from the rear.

The power supply board is usually assembled with a relay output board to form a complete subassembly, as shown in the following diagram.

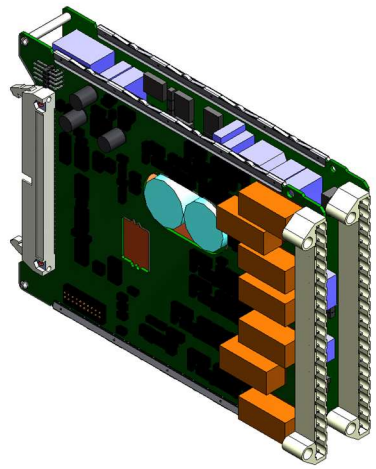

R00229

Figure 7: Power Supply Assembly

The power supply outputs are used to provide isolated power supply rails to the various modules within the unit.

Three voltage levels are used by the unit's modules:

- 5.1 V for all digital circuits
- +/- 16 V for the analogue electronics such as on the input board
- 22 V for driving the output relay coils.

All power supply voltages, including the 0 V earth line, are distributed around the unit by the 64-way ribbon cable.

The power supply board incorporates inrush current limiting. This limits the peak inrush current to approximately 10 A.

Power is applied to pins 1 and 2 of the terminal block, where pin 1 is negative and pin 2 is positive. The pin numbers are clearly marked on the terminal block as shown in the following diagram:

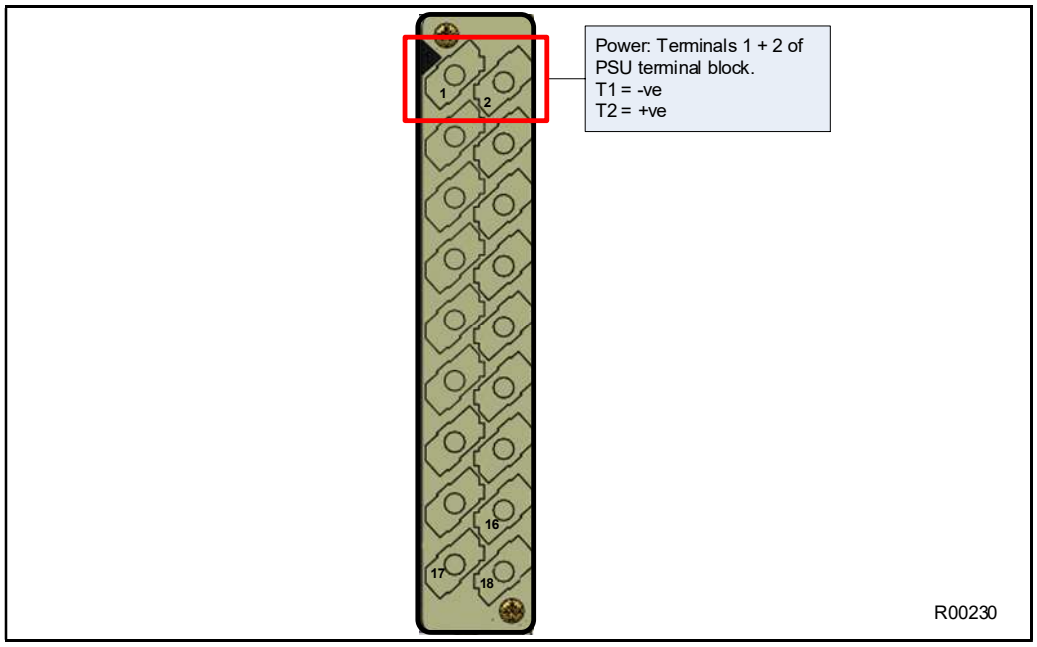

Figure 8: Power Supply Terminals

3.4.1 Watchdog

The Watchdog contacts are also hosted on the power supply board. The Watchdog facility provides two output relay contacts, one normally open and one normally closed. These are used to indicate the health of the device and are driven by the main processor board, which continually monitors the hardware and software when the device is in service.

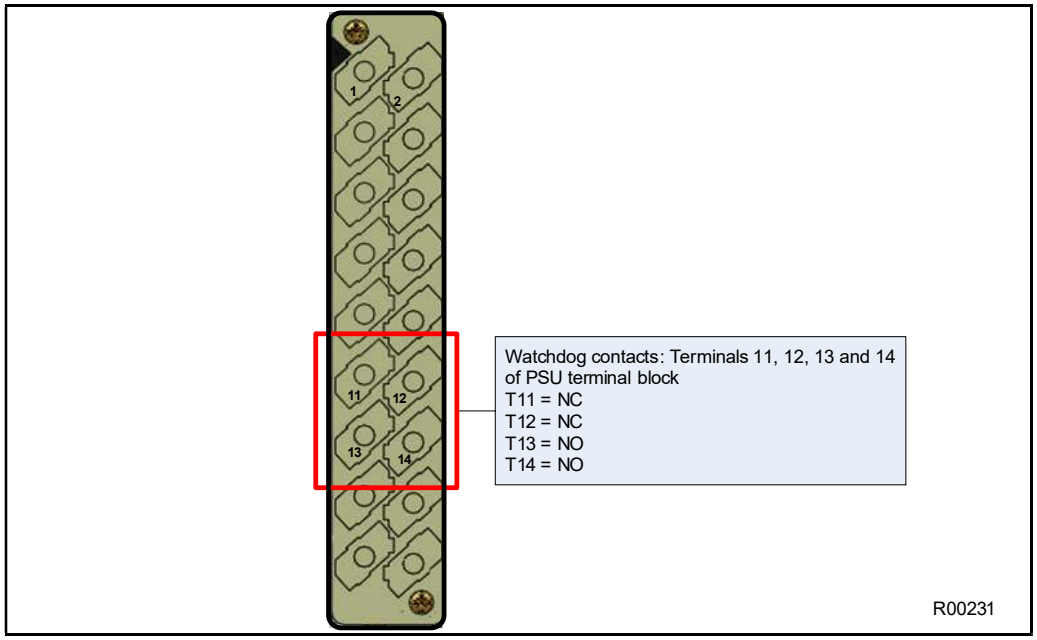

Figure 9: Watchdog Contact Terminals

3.4.2 Rear Serial Port

The rear serial port (RP1) is housed on the power supply board. This is a three-terminal EIA(RS)485 serial communications port and is intended for use with a permanently wired connection to a remote-control centre for SCADA communication. The interface supports half-duplex communication and provides optical isolation for the serial data being transmitted and received.

The physical connectivity is achieved using three screw terminals: two for the signal connection, and the third for the earth shield of the cable. These are located on pins 16, 17 and 18 of the power supply terminal block which is on the far right looking from the rear. The interface can be selected between RS485 and K-bus. When the K-Bus option is selected, the two signal connections are not polarity conscious.

The polarity independent K-bus can only be used for the Courier data protocol. The polarity conscious MODBUS, IEC 60870-5-103 and DNP3.0 protocols need RS485.

The following diagram shows the rear serial port. The pin assignments are as follows:

- Pin 16: Earth shield
- Pin 17: Negative signal
- Pin 18: Positive signal

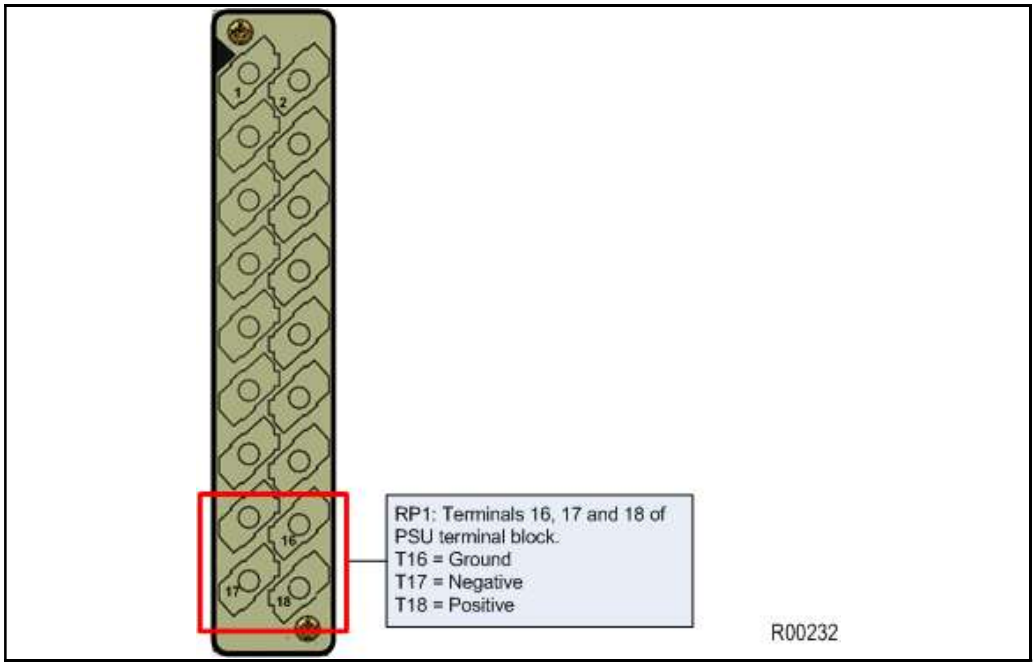

Figure 10: Rear Serial Port Terminals

An additional serial port with D-type presentation is available as an optional board, if required.

3.5 Input Module - 1 Transformer Board

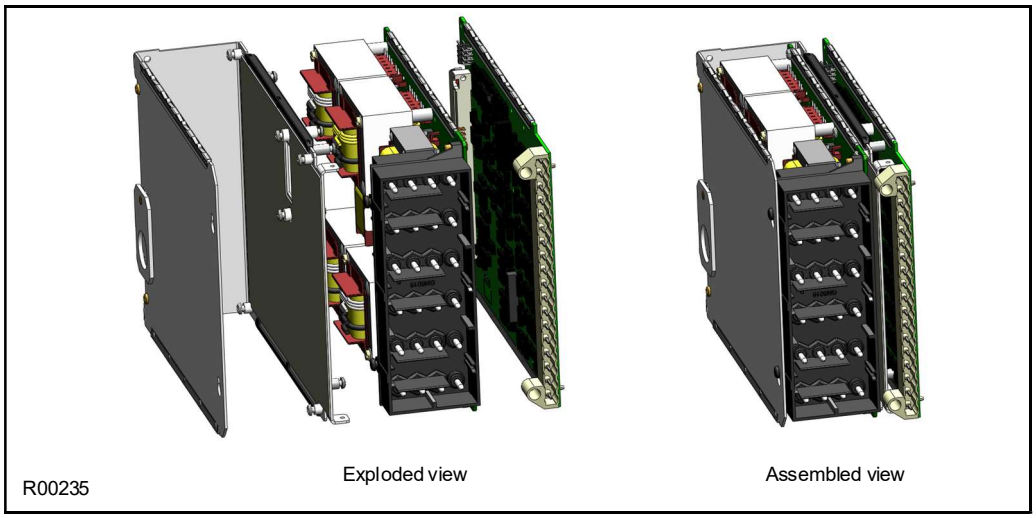

Figure 11: Input Module - 1 Transformer Board

The input module consists of the main input board coupled together with an instrument transformer board. The instrument transformer board contains the voltage and current transformers, which isolate and scale the analogue input signals delivered by the system transformers. The input board contains the A/D conversion and digital processing circuitry, as well as eight digital isolated inputs (opto-inputs).

The boards are connected physically and electrically. The module is encased in a metal housing for shielding against electromagnetic interference.

3.5.1 Input Module Circuit Description

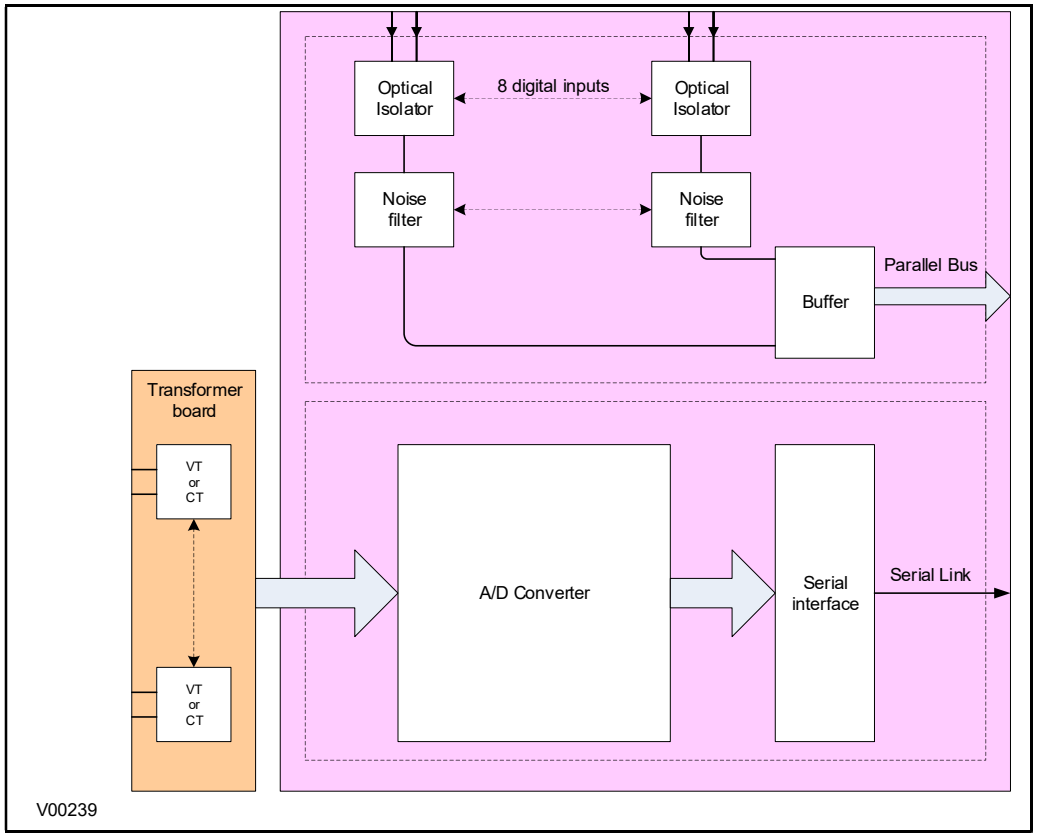

Figure 12: Input Module Schematic

A/D Conversion

The differential analogue inputs from the CT and VT transformers are presented to the main input board as shown. Each differential input is first converted to a single input quantity referenced to the input board's earth potential. The analogue inputs are sampled and converted to digital, then filtered to remove unwanted properties. The samples are then passed through a serial interface module which outputs data on the serial sample data bus.

The calibration coefficients are stored in non-volatile memory. These are used by the processor board to correct for any amplitude or phase errors introduced by the transformers and analogue circuitry.

Opto-isolated inputs

The other function of the input board is to read in the state of the digital inputs. As with the analogue inputs, the digital inputs must be electrically isolated from the power system. This is achieved by means of the 8 on-board optical isolators for connection of up to 8 digital signals. The digital signals are passed through an optional noise filter before being buffered and presented to the unit's processing boards in the form of a parallel data bus.

This selectable filtering allows the use of a pre-set filter of ½ cycle which renders the input immune to induced power-system noise on the wiring. Although this method is secure it can be slow, particularly for inter-tripping. This can be improved by switching off the ½ cycle filter, in which case one of the following methods to reduce ac noise should be considered.

- Use double pole switching on the input
- Use screened twisted cable on the input circuit

The opto-isolated logic inputs can be configured for the nominal battery voltage of the circuit for which they are a part, allowing different voltages for different circuits such as signalling and tripping.

Note: The opto-input circuitry can be provided without the A/D circuitry as a separate board, which can provide supplementary opto-inputs.

3.6 Transformer Board

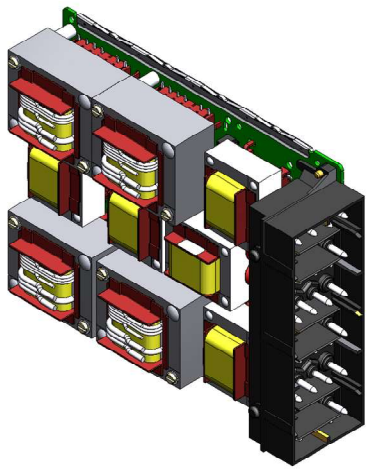

R00237

Figure 13: Transformer board

The transformer board hosts the current and voltage transformers. These are used to step down the currents and voltages originating from the power systems' current and voltage transformers to levels that can be used by the devices' electronic circuitry. In addition to this, the on-board CT and VT transformers provide electrical isolation between the unit and the power system.

The transformer board is connected physically and electrically to the input board to form a complete input module.

For terminal connections, please refer to the wiring diagrams.

3.7 Input Board

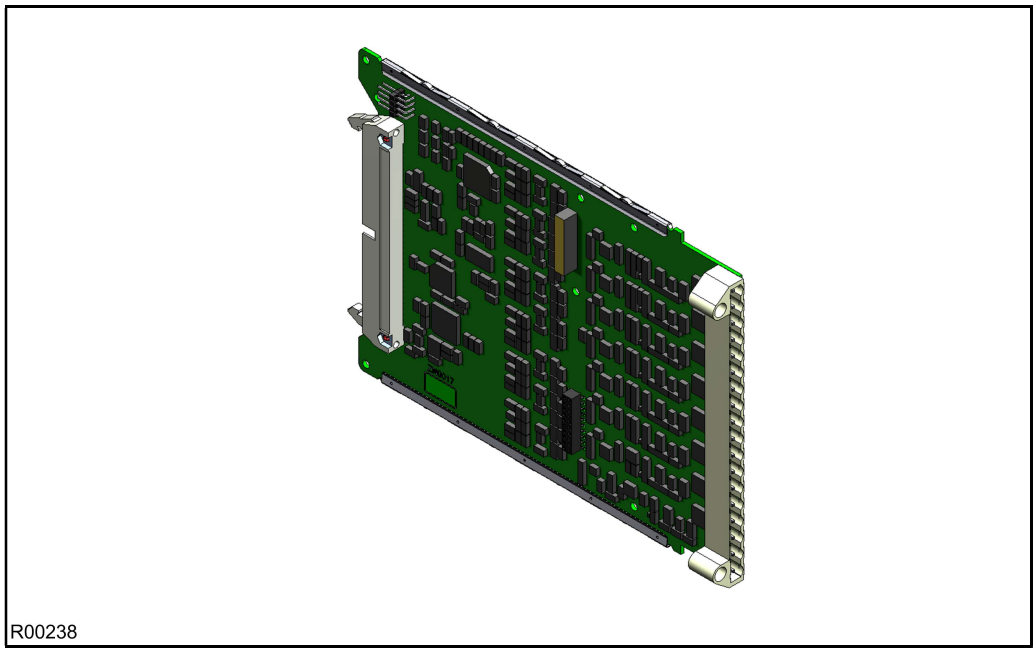

Figure 14: Input Board

The input board is used to convert the analogue signals delivered by the current and voltage transformers into digital quantities used by the IED. This input board also has on-board opto-input circuitry, providing eight optically isolated digital inputs and associated noise filtering and buffering. These opto-inputs are presented to the user by means of a MD terminal block, which sits adjacent to the analogue inputs HD terminal block.

The input board is connected physically and electrically to the transformer board to form a complete input module.

The terminal numbers of the opto-inputs are as follows:

Terminal Number	Opto-input
Terminal 1	Opto 1 -ve
Terminal 2	Opto 1 +ve
Terminal 3	Opto 2 -ve
Terminal 4	Opto 2 +ve
Terminal 5	Opto 3 -ve
Terminal 6	Opto 3 +ve
Terminal 7	Opto 4 -ve
Terminal 8	Opto 4 +ve
Terminal 9	Opto 5 -ve
Terminal 10	Opto 5 +ve
Terminal 11	Opto 6 -ve
Terminal 12	Opto 6 +ve
Terminal 13	Opto 7 –ve
Terminal 14	Opto 7 +ve
Terminal 15	Opto 8 –ve
Terminal 16	Opto 8 +ve
Terminal 17	Common
Terminal 18	Common

3.8 Standard Output Relay Board

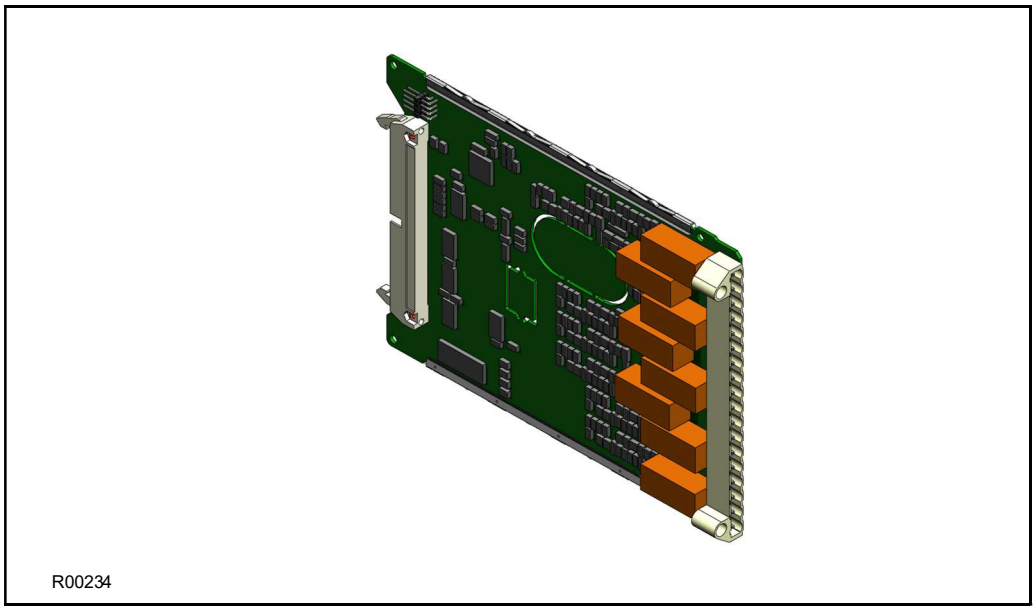

Figure 15: Standard Output Relay Board - 8 Contacts

This output relay board has 8 relays with 6 Normally Open contacts and 2 Changeover contacts.

The output relay board is provided together with the power supply board as a complete assembly, or independently for the purposes of relay output expansion.

There are two cut-out locations on the board. These can be removed to allow power supply components to protrude when coupling the output relay board to the power supply board. If the output relay board is to be used independently, these cut-out locations remain intact.

The terminal numbers are as follows:

Terminal Number	Output Relay
Terminal 1	Relay 1 NO
Terminal 2	Relay 1 NO
Terminal 3	Relay 2 NO
Terminal 4	Relay 2 NO
Terminal 5	Relay 3 NO
Terminal 6	Relay 3 NO
Terminal 7	Relay 4 NO
Terminal 8	Relay 4 NO
Terminal 9	Relay 5 NO
Terminal 10	Relay 5 NO
Terminal 11	Relay 6 NO
Terminal 12	Relay 6 NO
Terminal 13	Relay 7 changeover
Terminal 14	Relay 7 changeover
Terminal 15	Relay 7 common
Terminal 16	Relay 8 changeover
Terminal 17	Relay 7 changeover
Terminal 18	Relay 8 common

3.9 IRIG-B Board

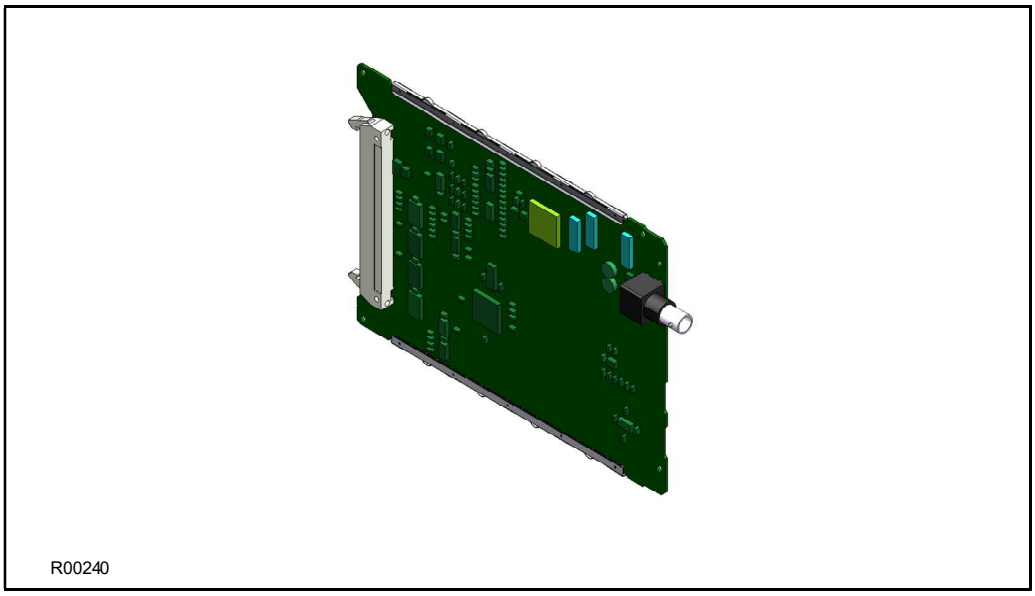

Figure 16: IRIG-B Board

The IRIG-B board can be fitted to provide an accurate timing reference for the device. The IRIG-B signal is connected to the board via a BNC connector. The timing information is used to synchronize the IED's internal real-time clock to an accuracy of 1 ms. The internal clock is then used for time tagging events, fault, maintenance and disturbance records.

IRIG-B interface is available in modulated or demodulated formats.

The IRIG-B facility is provided in combination with other functionality on a number of additional boards, such as:

- Fibre board with IRIG-B
- Second rear communications board with IRIG-B
- Ethernet board with IRIG-B
- Redundant Ethernet board with IRIG-B

There are three types of each of these boards; one type which accepts a modulated IRIG-B input, one type which accepts a demodulated IRIG-B input and one type which accepts a universal IRIG-B input.

3.10 Fibre Optic Board

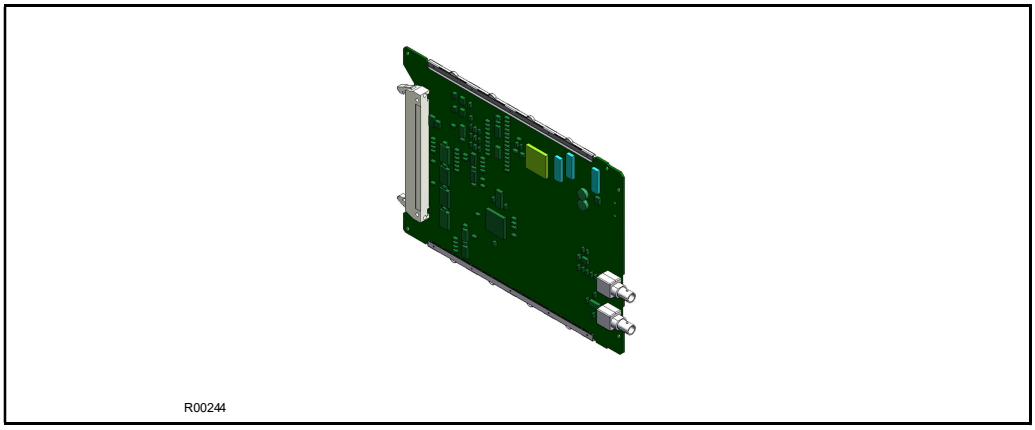

Figure 17: Fibre Optic Board

This board provides an interface for communicating with a master station. This communication link can use all compatible protocols (Courier, IEC 60870-5-103, MODBUS and DNP 3.0). It is a fibre-optic alternative to the metallic RS485 port presented on the power supply terminal block. The metallic and fibre optic ports are mutually exclusive.

The fibre optic port uses BFOC 2.5 ST connectors.

The board comes in two varieties: one with an IRIG-B input and one without.

3.11 Rear Communication Board

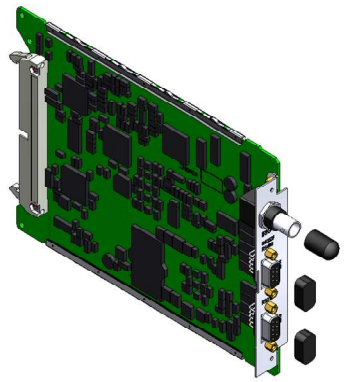

Figure 18: Rear Communication Board

The optional communications board containing the secondary communication ports provides two serial interfaces presented on 9 pin D-type connectors. These interfaces are known as SK4 and SK5. Both connectors are female connectors but are configured as DTE ports. This means pin 2 is used to transmit information and pin 3 to receive.

SK4 can be used with RS232, RS485 and K-bus. SK5 can only be used with RS232 and is used for electrical teleprotection. The optional rear communications board and IRIG-B board are mutually exclusive since they use the same hardware slot. However, the board comes in two varieties: one with an IRIG-B input and one without.

3.12 Redundant Ethernet Board (Hardware Option R/S/T)

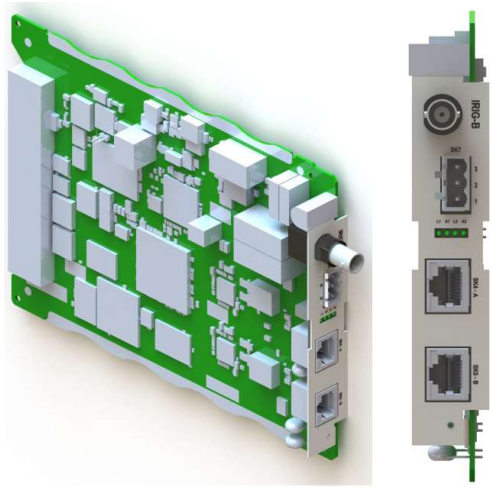

Figure 19: Redundant Ethernet Board

This board provides dual redundant Ethernet (supported by two fibre pairs) together with an IRIG-B interface for timing.

Different board variants are available, depending on the redundancy protocol and the type of IRIG-B signal (unmodulated or modulated). The available redundancy protocols are:

- RSTP (Rapid Spanning Tree Protocol)
- PRP (Parallel Redundancy Protocol)
- HSR (High-availability Seamless Redundancy)
- Failover

There are several variants for this board as follows:

- 100 Mbps redundant Ethernet running RSTP + PRP + HSR + Failover (two fibre pairs), with on-board universal IRIG-B
- 100 Mbps redundant Ethernet running RSTP + PRP + HSR + Failover (two copper pairs), with on-board universal IRIG-B
- 100 Mbps redundant Ethernet running RSTP + PRP + HSR + Failover (one copper, one multi-mode fibre), with on-board universal IRIG-B

The Ethernet and other connection details are described below:

IRIG-B Connector

- Centre connection: Signal
- Outer connection: Earth

Link Fail Connector (Ethernet Board Watchdog Relay)

Pin	Closed	Open
1-2	Link fail Channel 1 (A)	Link ok Channel 1 (A)
2-3	Link fail Channel 2 (B)	Link ok Channel 2 (B)

LEDs

LED	Function	On	Off	Flashing
Green	Link	Link ok	Link broken	
Yellow	Activity	SHP running		PRP, RSTP or DHP traffic

Optical Fibre Connectors (ST)

Connector	DHP	RSTP	SHP	PRP
A	RXA	RX1	RS	RXA
B	TXA	TX1	ES	TXA
C	RXB	RX2	RP	RXB
D	TXB	TX2	EP	TXB

RJ45 Connector

Pin	Signal Name	Signal Definition
1	TXP	Transmit (positive)
2	TXN	Transmit (negative)
3	RXP	Receive (positive)
4	-	Not used
5	-	Not used
6	RXN	Receive (negative)
7	-	Not used
8	-	Not used

3.13 Single Ethernet Board (Hardware Option U)

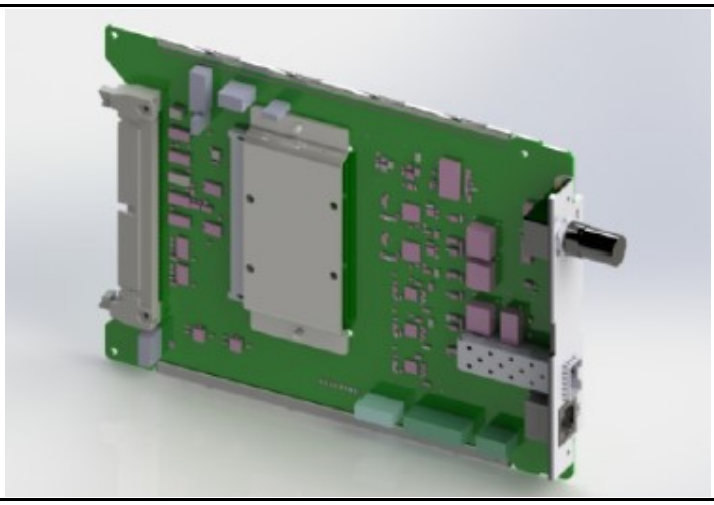

Figure 20: Ethernet Board

This board provides one optical 100Mbps LC duplex Ethernet port (NP2A) for station bus communications, with a universal IRIG-B interface for time synchronization. The NP1 Ethernet port is not active.

The Ethernet and other connection details are described below:

UNIVERSAL IRIG-B Connector

- Centre connection: signal
- Outer connection: Earth

LC Optical Fibre Connector (NP2A only)

Connector	SFP
A	TX
B	RX

3.14 Redundant Ethernet Board (Hardware Option W/Y)

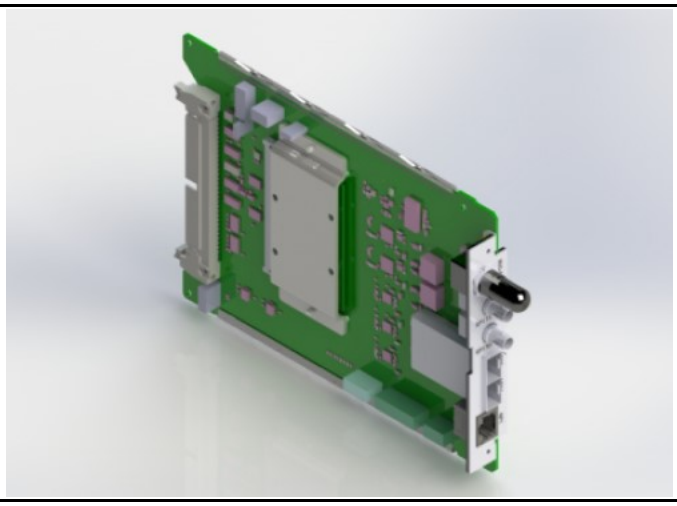

Figure 21: Redundant Ethernet Board

This board provides dual redundant Ethernet (NP2A and NP2B) for station bus communications, with a universal IRIG-B interface for time synchronization. The NP1 Ethernet port is not active.

The available redundancy protocols are:

- RSTP (Rapid Spanning Tree Protocol)
- PRP (Parallel Redundancy Protocol)
- HSR (High-availability Seamless Redundancy)
- Failover

There are several variants for this board as follows:

Two RJ45 duplex redundant 10/100Mbps Ethernet ports running RSTP + PRP + HSR + Failover, with on-board universal IRIG-B.

Two LC duplex redundant 100Mbps Ethernet ports running RSTP + PRP + HSR + Failover, with on-board universal IRIG-B.

The Ethernet and other connection details are described below:

UNIVERSAL IRIG-B Connector

- Centre connection: Signal
- Outer connection: Earth

LC Optical Fibre Connector (only for NP2A or NP2B when ordering fibre ports on station bus ports)

Connector	SFP
A	TX
B	RX

RJ45 Connector (NP1 or NP2A/NP2B when ordering two copper ports on station bus ports only)

Pin	Signal Name	Signal Definition
1	TXP	Transmit (positive)
2	TXN	Transmit (negative)
3	RXP	Receive (positive)
4	-	Not used
5	-	Not used
6	RXN	Receive (Negative)
7	-	Not used
8	-	Not used

3.15 Retrofit of Ethernet Cards Hardware Option R/S/T with Hardware Option U/W/Y

From version 91_E onwards P74x relays will continue to support Ethernet boards with CORTEC Hardware options R/S/T, and also a newer version of the Ethernet board with Hardware option U/W/Y. The following information will help customers who want to retrofit existing installations using the new U/W/Y boards.

General considerations:

- The model number of the P74x IED will change to accommodate the new Ethernet board options U/W/Y if replacing any of the R/S/T Ethernet board options.
- Software 91 requires a new minor software upgrade to support the new Ethernet board options U/W/Y, the initial version that supports the new boards is 91_E. The same minor software release will support both U/W/Y and R/S/T. Customers ordering 91 software without an Ethernet board option, won't need the upgrade.
- S1 Agile can convert settings and PSL files from hardware with the old R/S/T board to the new U/W/Y Ethernet board options for 91_E software.

Hardware review:

- Ethernet card R is a redundant Ethernet station bus card with 2 fibre optic ports with ST connectors. This card can be replaced with the new redundant Ethernet card Y which has 2 LC connectors.
    - **Impact:** The connectors are now LC, so the entire fibre needs to be replaced with a compatible one for the new connector, or an adaptor and a new small patchcord with the new connector.
- Ethernet card S is a redundant Ethernet station bus card with 2 RJ45 copper ports. This card can be replaced with the new redundant Ethernet card W which has 2 RJ45 copper ports.
    - **Impact:** No impact on port connections.

- Ethernet card T is a redundant Ethernet station bus card with a multi-mode fibre optic (ST) port and a copper RJ45 port. There is no like for like card in the new variant. If redundancy is not being used, the U Ethernet card provides a single multi-mode fibre optic (LC) port. If a single RJ45 copper Ethernet port is required Ethernet card W can be used in Failover mode. If redundancy is needed, either a variant W or a variant Y can be used depending on whether two copper or two fibre ports can be accommodated.
    - **Impact:** The impact depends on the application and the availability of fibre connectors. The new cards provide a solution for different applications except when a copper and fibre pairing in redundant mode are required.

Link Status monitoring:

- Ethernet cards R/S/T have a link status contact (watchdog) and LED. Ethernet cards U/W/Y have no physical contact for the link status because this functionality is fully embedded into the main processor.
    - **Impact:** There are two independent link status contacts (watchdog) in the R/S/T cards, one for each channel.
    - In the 9x software supporting the new U/W/Y Ethernet boards and older R/S/T boards, there is a new IEC 61850 logical node (LCCH) to monitor the 2 redundant channels' link status, with two data attributes (DA), one for each channel, which can be used by the SCADA for monitoring.
    - In the 91_E software supporting the new U/W/Y Ethernet boards there is a new IEC 61850 logical node (LCCH) to monitor the 2 redundant channels' link status, with two data attributes (DA), one for each channel, which can be used by the SCADA for monitoring.
    - There also are 2 new link status DDBs in the PSL. NP2A port status and NP2B port status. NP2A is the LAN A channel, NP2B is the LAN B channel. The DDBs can be connected in the PSL as required, for example they can be linked to LEDs for visual indication or output contacts for connection to RTU (similar to how the fixed contacts worked in the R/S/T cards).
    - A NIC Link Fail DDB is also available for U/W/Y Ethernet boards. This DDB monitors the overall status of the Ethernet communications and is triggered if both channels are disconnected.

S1 Agile tools and configuration files:

- **S1 Agile:** A new version of S1 Agile, 3.2.0, is available to support the new hardware options U/W/Y. The configuration of the U/W/Y Ethernet ports can be done using the IED Configurator tool of S1 Agile compared to the configuration of the R/S/T Ethernet ports via the Redundant Ethernet Configurator tool of S1 Agile.
- **MCL Files:** The MCL template has changed to version 5.1 for the U/W/Y Ethernet ports. Should a user want to reuse an existing MCL file, version 5.0 (R/S/T options), they need to reload the new ICD template using the IED Configurator tool.
- **PSL Files:** A new default PSL file is available for the new software release which include the 2 new DDBs described above. For users with previous R/S/T PSL files, they can be converted to include the 2 new DDBs, using the PSL conversion tool in S1 Agile for software version 9x only. New PSL files for the U/W/Y Ethernet hardware options are provided via the Data Model Manager.
- **ICD Files:** A new ICD file to support the new software release is provided via the Data Model Manager.

3.16 Coprocessor Board

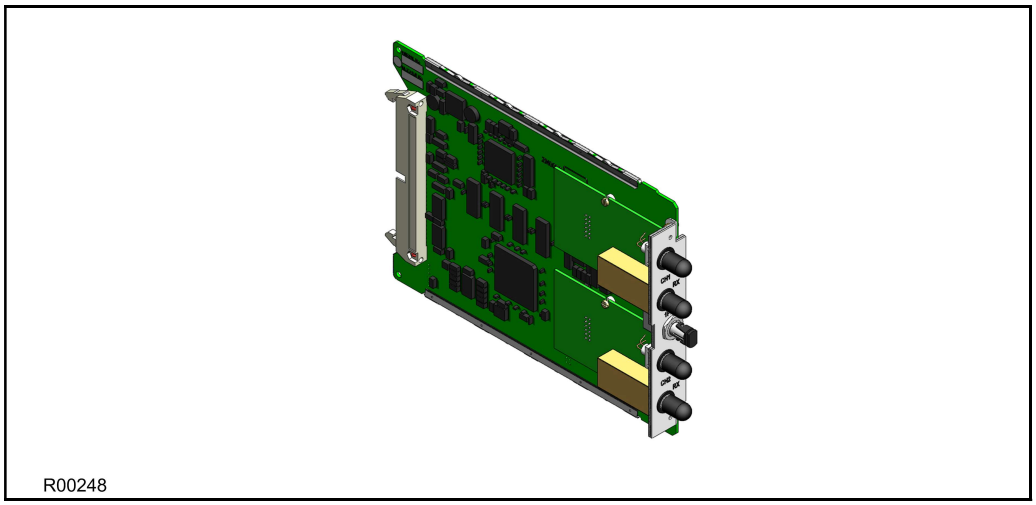

Figure 22: Fully Populated Coprocessor Board

Note: The above figure shows a coprocessor complete with GPS input and 2 fibreoptic serial data interfaces and is not necessarily representative of the product and model described in this manual. These interfaces will not be present on boards that do not require them.

Where applicable, a second processor board is used to process the special algorithms associated with the device.

This second processor board provides fast access (zero wait state) SRAM for use with both program and data memory storage. This memory can be accessed by the main processor board via the parallel bus. This is how the software is transferred from the flash memory on the main processor board to the coprocessor board on power up. Further communication between the two processor boards is achieved via interrupts and the shared SRAM.

The serial bus carrying the sample data is also connected to the co-processor board, using the processor's built-in serial port, as on the main processor board.

There are several different variants of this board, which can be chosen depending on the exact device and model.

The variants are:

- Coprocessor board with current differential inputs and GPS input
- Coprocessor board with current differential inputs only
- Coprocessor board with GPS input only

3.16.1 Current Differential Inputs

Where applicable, the coprocessor board can be equipped with up to two daughter boards, each containing a fibre-optic interface for a serial data link. BFOC 2.5 ST connectors are used for this purpose. One or two channels are provided, each channel comprising a fibre pair for transmitting and receiving (Rx Tx). These channels are labelled Ch1 and Ch2. These serial data links are used to transfer information between two or three IEDs for current differential applications.

3.17 High Break Output Relay Board

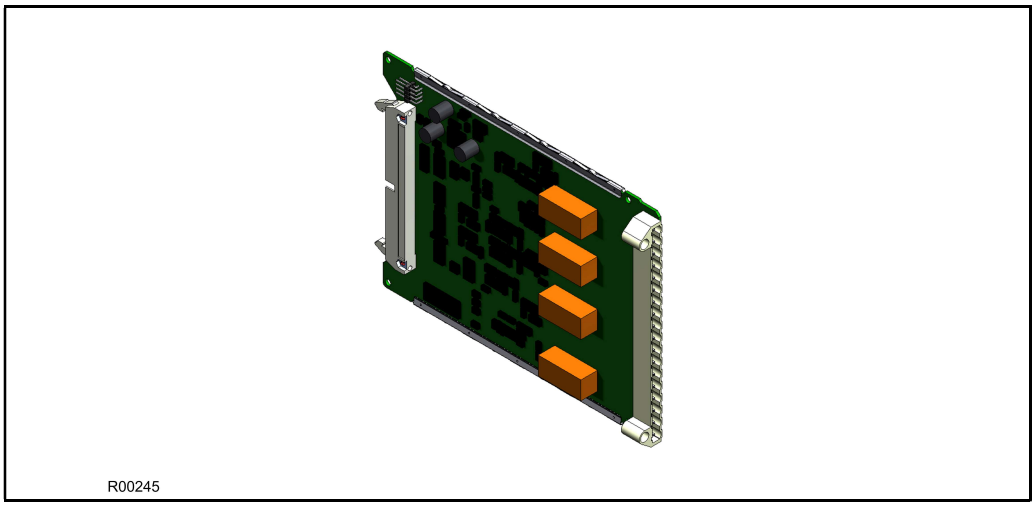

Figure 23: High Break Relay Output Board

A High Break output relay board is available as an option. It comprises four normally open output contacts, which are suitable for high breaking loads.

A High Break contact consists of a high capacity relay with a MOSFET in parallel with it. The MOSFET has a varistor placed across it to provide protection, which is required when switching off inductive loads. This is because the stored energy in the inductor causes a high reverse voltage that could damage the MOSFET, if not protected.

When there is a control input command to operate an output contact the miniature relay is operated at the same time as the MOSFET. The miniature relay contact closes in nominally 3.5 ms and is used to carry the continuous load current. The MOSFET operates in less than 0.2 ms but is switched off after 7.5 ms.

When the control input is reset, the MOSFET is again turned on for 7.5 mS. The miniature relay resets in nominally 3.5 ms before the MOSFET. This means the MOSFET is used to break the load. The MOSFET absorbs the energy when breaking inductive loads and so limits the resulting voltage surge. This contact arrangement is for switching DC circuits only.

The board number is:

- ZN0042 001

High Break Contact Operation

The following figure shows the timing diagram for High Break contact operation:

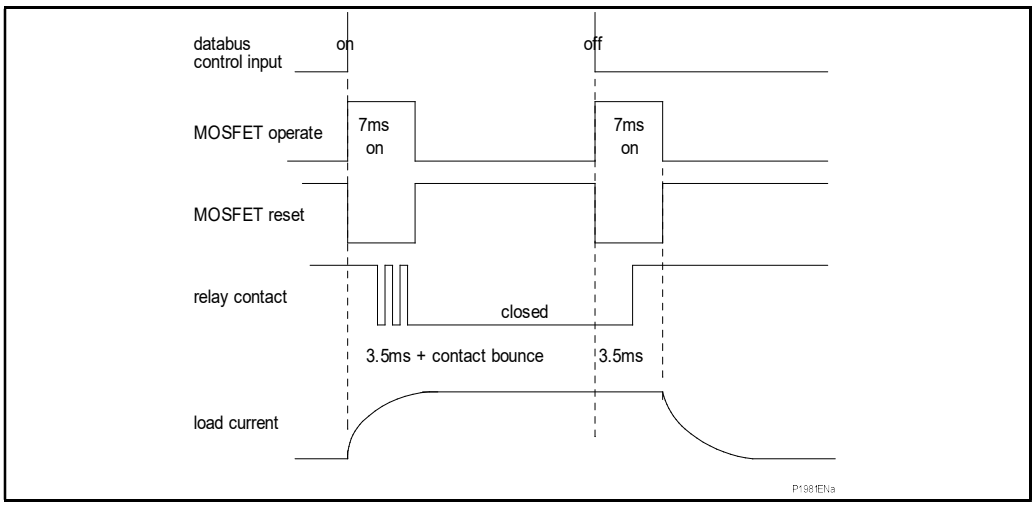

Figure 24: High Break Contact Operation

High Break Contact Applications

- Efficient scheme engineering

In traditional hard wired scheme designs, High Break capability could only be achieved using external electromechanical trip relays. Instead, these internal High Break contacts can be used thus reducing space requirements.

- Accessibility of CB auxiliary contacts

It is common practice to use circuit breaker 52a (CB Closed) auxiliary contacts to break the trip coil current on breaker opening, thereby easing the duty on the protection contacts. In some cases (such as operation of disconnectors, or retrofitting), it may be that 52a contacts are either unavailable or unreliable. In such cases, High Break contacts can be used to break the trip coil current in these applications.

- Breaker fail

In the event of failure of the local circuit breaker (stuck breaker), or defective auxiliary contacts (stuck contacts), it is incorrect to use 52a contact action. The interrupting duty at the local breaker then falls on the relay output contacts, which may not be rated to perform this duty. High Break contacts should be used in this case to avoid the risk of burning out relay contacts.

- Initiation of teleprotection

The High Break contacts also offer fast making, which results in faster tripping. In addition, fast keying of teleprotection is a benefit. Fast keying bypasses the usual contact operation time, such that permissive, blocking and intertrip commands can be routed faster.

Warning:

These relay contacts are POLARITY SENSITIVE. External wiring must comply with the polarity requirements described in the external connection diagram to ensure correct operation.

4. SOFTWARE DESIGN OVERVIEW

The device software can be conceptually categorized into several elements as follows:

- The system level software
- The platform software
- The protection and control software

These elements are not distinguishable to the user, and the distinction is made purely for the purposes of explanation. The following figure shows the software architecture.

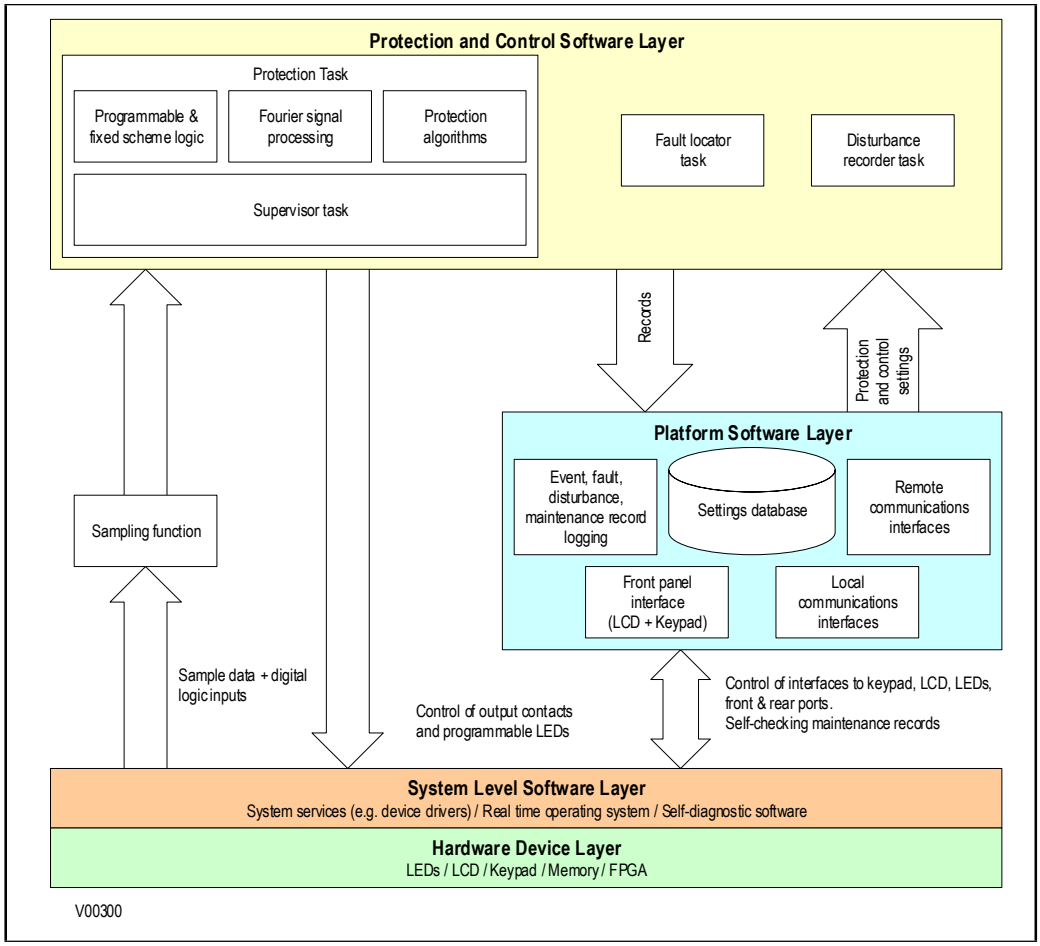

Figure 25: Software Architecture

The software, which executes on the main processor, can be divided into several functions as illustrated above. Each function is further broken down into a number of separate tasks. These tasks are then run according to a scheduler. They are run at either a fixed rate or they are event driven. The tasks communicate with each other as and when required.

5. SYSTEM LEVEL SOFTWARE

5.1 Real-time Operating System

The real-time operating system is used to schedule the processing of the various tasks. This ensures that they are processed in the time available and in the desired order of priority. The operating system also plays a part in controlling the communication between the software tasks, through to the use of operating system messages.

5.2 System Services Software

The system services software provides the layer between the hardware and the higher-level functionality of the platform software and the protection and control software. For example, the system services software provides drivers for items such as the LCD display, the keypad and the remote communication ports. It also controls things like the booting of the processor and the downloading of the processor code into RAM at startup.

5.3 Self-diagnostic Software

The device includes several self-monitoring functions to check the operation of its hardware and software while in service. If there is a problem with the hardware or software, it should be able to detect and report the problem and attempt to resolve the problem by performing a reboot. In this case, the device would be out of service for a short time, during which the 'Healthy' LED on the front of the device is switched OFF and the watchdog contact at the rear is ON. If the restart fails to resolve the problem, the unit takes itself permanently out of service; the 'Healthy'

LED stays OFF and watchdog contact stays ON.

If a problem is detected by the self-monitoring functions, the device attempts to store a maintenance record to allow the nature of the problem to be communicated to the user.

Self-monitoring is implemented in two stages: firstly, a thorough diagnostic check which is performed on bootup, and secondly a continuous self-checking operation, which checks the operation of the critical functions whilst it is in service.

5.4 Startup Self-testing

The self-testing takes a few seconds to complete, during which time the IED's measurement, recording, control, and protection functions are unavailable. On a successful start-up and self-test, the 'health-state' LED on the front of the unit is switched on. If a problem is detected during the start-up testing, the device remains out of service until it is manually restored to working order. The operations that are performed at start-up are:

- System boot
- System software initialization
- Platform software initialization and monitoring

5.4.1 System Boot

The integrity of the Flash memory is verified using a checksum before the program code and stored data is loaded into RAM for execution by the processor. When the loading has been completed, the data held in RAM is compared to that held in the Flash memory to ensure that no errors have occurred in the data transfer and that the two are the same. The entry point of the software code in RAM is then called. This is the IED's initialization code.

5.4.2 System Level Software Initialization

The initialization process initializes the processor registers and interrupts, starts the watchdog timers (used by the hardware to determine whether the software is still running), starts the real-time operating system and creates and starts the supervisor task. In the initialization process the device checks the following:

- The status of the supercapacitor
- The integrity of the supercapacitor backed SRAM that is used to store event, fault and disturbance records
- The voltage level of the field voltage supply which is used to drive the opto-isolated inputs
- The operation of the LCD controller
- The watchdog operation

At the conclusion of the initialization software the supervisor task begins the process of starting the platform software.

5.4.3 Platform Software Initialization & Monitoring

When starting the platform software, the device checks the following:

- The integrity of the data held in non-volatile memory (using a checksum)
- The operation of the real-time clock
- The optional IRIG-B board (if applicable)
- The presence and condition of the input board
- The analogue data acquisition system (it does this by sampling the reference voltage)

At the successful conclusion of all these tests the relay is entered into service and the protection started-up.

5.5 Continuous Self-testing

When the device is in service, it continually checks the operation of the critical parts of the hardware and software. The checking is carried out by the system services software and the results are reported to the platform software. The functions that are checked are as follows:

- The flash memory containing all program code setting values and language text is verified by a checksum
- The code and constant data held in system memory is checked against the corresponding data in Flash memory to check for data corruption
- The system memory containing all data other than the code and constant data is verified with a checksum
- The level of the field voltage
- The integrity of the digital signal I/O data from the opto-isolated inputs and the relay contacts is checked by the data acquisition function every time it is executed.
- The operation of the analogue data acquisition system is continuously checked by the acquisition function every time it is executed, by means of sampling the reference voltages
- The operation of the IRIG-B board is checked, where it is fitted, by the software that reads the time and date from the board
- The operation of the Ethernet board is checked, where it is fitted, by the software on the main processor card. If the Ethernet board fails to respond an alarm is raised and the card is reset in an attempt to resolve the problem

If one of the checks detects an error in any of the subsystems, the platform software is it attempts to log a maintenance record.

If the problem is with the IRIG-B board, the device continues in operation. For problems detected in any other area the device initiates a shutdown and re-boot, resulting in a period of up to 5 seconds when the functionality is unavailable.

A restart should clear most problems that may occur. If, however, the diagnostic self-check detects the same problem that caused the device to restart, the restart has not cleared the problem, and the device takes itself permanently out of service. This is indicated by the ‘healthy-state’ LED on the front of the device, which switches OFF, and the watchdog contact switches ON.

6. PLATFORM SOFTWARE

The platform software has three main functions:

- To control the logging of records that are generated by the protection software, including alarms and event, fault, and maintenance records.
- To store and maintain a database of all the relay's settings in non-volatile memory.
- To provide the internal interface between the settings database and the user interfaces, using the front panel interface and the front and rear communication ports

6.1 Record Logging

The logging function is used to store all alarms, events, faults and maintenance records. The records are stored in non-volatile memory to provide a log of what has happened. The IED maintains four types of log on a first in first out basis (FIFO). These are:

- Alarms
- Event records
- Fault records
- Maintenance records

The logs are maintained such that the oldest record is overwritten with the newest record. The logging function can be initiated from the protection software. The platform software is responsible for logging a maintenance record in the event of an IED failure. This includes errors that have been detected by the platform software itself or errors that are detected by either the system services or the protection software function. See the Measurement and Recording chapter for further details on record logging.

6.2 Settings Database

The settings database contains all the settings and data, which are stored in non-volatile memory. The platform software manages the settings database and ensures that only one user interface can modify the settings at any one time. This is a necessary restriction to avoid conflict between different parts of the software during a setting change.

Changes to protection settings and disturbance recorder settings, are first written to a temporary location SRAM memory. This is sometimes called 'Scratchpad' memory. These settings are not written into non-volatile memory immediately. This is because a batch of such changes should not be activated one by one, but as part of a complete scheme. Once the complete scheme has been stored in SRAM, the batch of settings can be committed to the non-volatile memory where they will become active.

6.3 Interfaces

The settings and measurements database must be accessible from all the interfaces to allow read and modify operations. The platform software presents the data in the appropriate format for each of the interfaces (LCD display, keypad and all the communications interfaces).

7. PROTECTION AND CONTROL FUNCTIONS

The protection and control software processes all the protection elements and measurement functions. To achieve this, it has to communicate with the system services software, the platform software as well as organise its own operations.

The protection task software has the highest priority of any of the software tasks in the main processor board. This ensures the fastest possible protection response.

The protection and control software provides a supervisory task, which controls the start-up of the task and deals with the exchange of messages between the task and the platform software.

7.1 Acquisition of Samples

After initialization, the protection and control task waits until there are enough samples to process. The acquisition of samples on the main processor board is controlled by a 'sampling function' which is called by the system services software.

This sampling function takes samples from the input module and stores them in a two-cycle FIFO buffer. These samples are also stored concurrently by the coprocessor. The sample rate is 48 samples per cycle. This results in a nominal sample rate of 2,400 samples per second for a 50 hz system and 2,880 samples per second for a 60 Hz system. However, the sample rate is not fixed. It tracks the power system frequency as described in the next section.

In normal operation, the protection task is executed 16 times per cycle.

7.2 Frequency Tracking

The device provides a frequency tracking algorithm so that there are always 48 samples per cycle irrespective of frequency drift. The frequency range in which 48 samples per second are provided is between 45 Hz and 66 z. If the frequency falls outside this range, the sample rate reverts to its default rate of 2,400 Hz for 50 Hz or 2,880 Hz for 60 Hz.

The frequency tracking of the analogue input signals is achieved by a recursive Fourier algorithm which is applied to one of the input signals. It works by detecting a change in the signal's measured phase angle. The calculated value of the frequency is used to modify the sample rate being used by the input module, to achieve a constant sample rate per cycle of the power waveform. The value of the tracked frequency is also stored for use by the protection and control task.

The frequency tracks off any voltage or current in the order VA, VB, VC, IA, IB, IC, down to 10%Vn for voltage and 5%In for current.

7.2.1 Topology Software

Topology algorithm determines dynamically the electric scheme of the substation from the auxiliary contact of circuit breaker and isolators. The results of local topology performed on peripheral unit are sending to central unit which determines global topology of the substation. At the end of process, central unit know the node of current and zone to trip according to the fault location.

7.2.2 Signal Processing

The sampling frequency of analogue signals is fixed to 2400Hz regardless of the power system frequency.

To ensure that the frequency is identical on each PU, analogue acquisition is based on an interrupt signal from the communication software. The central unit sends frames on optical fibres to all peripheral units, so that this received signal triggers the acquisition of the analogue signal at the same time.

The main signal processing algorithms are:

- Flux calculation and prediction algorithm to detect CT saturation
- Zero sequence supervision
- Detection of signal variation
- Local threshold to block busbar protection on external fault

All this information is transmitted to the central unit with the sample of current representing the signal quality. The sum of the current is processed in the central unit at 1200Hz, but the signal processing is executed at 2400Hz on the peripheral unit.

The protection and control calculates the Fourier components for the analogue signals. The Fourier components are calculated using a one-cycle, 48-sample Discrete Fourier Transform (DFT). The DFT is always calculated using the last cycle of samples from the 2-cycle buffer, i.e. the most recent data is used. The DFT used in this way extracts the power frequency fundamental component from the signal and produces the magnitude and phase angle of the fundamental in rectangular component format. The DFT provides an accurate measurement of the fundamental frequency component, and effective filtering of harmonic frequencies and noise.

This performance is achieved in conjunction with the relay-input module which provides hardware anti-alias filtering to attenuate frequencies above the half sample rate. The Fourier components of the input current signals are stored in memory so that they can be accessed by all the protection elements' algorithms. The samples from the input module are also used in an unprocessed form by the disturbance recorder for waveform recording and to calculate true rms values of current.

7.2.3 Programmable Scheme Logic

The purpose of the programmable scheme logic (PSL) is to allow you to configure your own protection schemes to suit your application. This is done with programmable logic gates and delay timers. To allow greater flexibility, different PSL is allowed for each of the four setting groups.

The input to the PSL is any combination of the status of the digital input signals from the opto-isolators on the input board, the outputs of the protection elements such as protection starts and trips, and the outputs of the fixed protection scheme logic (FSL). The fixed scheme logic provides the standard protection schemes. The PSL consists of software logic gates and timers. The logic gates can be programmed to perform a range of different logic functions and can accept any number of inputs. The timers are used either to create a programmable delay, and/or to condition the logic outputs, such as to create a pulse of fixed duration on the output regardless of the length of the pulse on the input. The outputs of the PSL are the LEDs on the front panel of the relay and the output contacts at the rear.

The execution of the PSL logic is event driven. The logic is processed whenever any of its inputs change, for example because of a change in one of the digital input signals or a trip output from a protection element. Also, only the part of the PSL logic that is affected by the input change that has occurred is processed. This reduces the amount of processing time that is used by the PSL. The protection & control software updates the logic delay timers and checks for a change in the PSL input signals every time it runs.

The PSL can be configured to create very complex schemes. Because of this PSL design is achieved by means of a PC support package called the PSL Editor. This is available as part of the settings application software MiCOM S1 Agile, or as a standalone software module.

7.2.4 Event Recording

A change in any digital input signal or protection element output signal is used to indicate that an event has taken place. When this happens, the protection and control task sends a message to the supervisor task to indicate that an event is available to be processed and writes the event data to a fast buffer controlled by the supervisor task.

When the supervisor task receives an event record, it instructs the platform software to create the appropriate log in non-volatile memory (backed-up SRAM). The operation of the record logging to backed-up SRAM is slower than the supervisor buffer. This means that the protection software is not delayed waiting for the records to be logged by the platform software. However, in the rare case when a large number of records to be logged are created in a short period of time, it is possible that some will be lost, if the supervisor buffer is full before the platform software is able to create a new log in backed-up SRAM. If this occurs, an event is logged to indicate this loss of information.

Maintenance records are created in a similar manner, with the supervisor task instructing the platform software to log a record when it receives a maintenance record message. However, it is possible that a maintenance record may be triggered by a fatal error in the relay in which case it may not be possible to successfully store a maintenance record, depending on the nature of the problem.

For more information, see the Measurements and Recording chapter.

7.2.5 Disturbance Recorder

The disturbance recorder operates as a separate task from the protection and control task. It can record the waveforms for up to 8 analogue channels and the values of up to 32 digital signals. For peripheral unit the recording time is user selectable up to a maximum of 10 seconds and for central unit the record duration is fixed to 600ms.

The disturbance recorder is supplied with data by the protection and control task once per cycle and collates the received data into the required length disturbance record. The disturbance records can be extracted using application software or the SCADA system, which can also store the data in COMTRADE format, allowing the use of other packages to view the recorded data.

7.2.6 Function Key Interface (P741 and P743)

The function keys interface directly into the PSL as digital input signals. A change of state is only recognized when a key press is executed on average for longer than 200 ms. The time to register a change of state depends on whether the function key press is executed at the start or the end of a protection task cycle, with the additional hardware and software scan time included. A function key press can provide a latched (toggled mode) or output on key press only (normal mode) depending on how it is programmed. It can be configured to individual protection scheme requirements. The latched state signal for each function key is written to non-volatile memory and read from non-volatile memory during relay power up thus allowing the function key state to be reinstated after powerup, should power be inadvertently lost.

COMMISSIONING

CONTENTS

1.	**GENERAL GUIDELINES**	**5**
2.	**COMMISSIONING EQUIPMENT**	**6**
2.1	**Recommended Commissioning Equipment**	**6**
2.2	**Essential Commissioning Equipment**	**6**
2.3	**Advisory Test Equipment**	**7**
3.	**PRODUCT CHECKS**	**8**
3.1	**Product Check with the Relay De-energised**	**8**
3.1.1	Visual Inspection	8
3.1.2	Current Transformer Shorting Contacts	9
3.1.3	Insulation	9
3.1.4	External Wiring	9
3.1.5	Watchdog Contacts	9
3.1.6	Power Supply	9
3.2	**Product Checks with the Relay Energised**	**10**
3.2.1	Watchdog Contacts	10
3.2.2	Date and Time	10
3.2.3	Test LEDs	11
3.2.4	Test Alarm and Out of Service LEDs	11
3.2.5	Test Trip LED	12
3.2.6	Test User-programmable LEDs	12
3.2.7	Test Field Voltage Supply	12
3.2.8	Test Opto-isolators	12
3.2.9	Test Output Relays	12
3.2.10	Test Serial Communication Port RP1	13
3.2.11	Test Serial Communication Port RP2	14
3.2.12	Test Ethernet Communication	15
3.3	**Secondary Injection Tests**	**15**
3.3.1	Test Current Inputs (P742, P743 only)	15
3.3.2	Test Voltage Inputs	15
4.	**ELECTRICAL INTERMICOM COMMUNICATION LOOPBACK**	**17**
4.1	**Setting up the Loopback**	**17**
4.2	**Loopback Test**	**17**

4.2.1 InterMiCOM Command Bits 18
4.2.2 InterMICOM Channel Diagnostics 18
4.2.3 Simulating a Channel Failure 18
4.2.4 Loopback Removal and Establishing Service Condition 18
4.2.5 Current Differential Communications 18

5. COMMISSIONING TEST MENU 20
5.1 Test Mode 20
5.2 Busbar Monitoring (P741 only) 21
5.3 Busbar (BB) & Circuit Breaker Fail (CBF) Disable (P741 only) 21

6. SETTING CHECKS 22
6.1 Apply Application-specific Settings 22
6.1.1 Transferring Settings from a Settings File 22
6.1.2 Entering Settings using the HMI 22
6.2 How to Measure the Burden Resistance (R_B) 23
6.2.1 RB_{ph}/RB_N is close to 1 24
6.2.2 RB_{Ph}/RB_N is close to 3 25
6.3 Demonstrate correct relay operation 25

7. CURRENT DIFFERENTIAL PROTECTION 26
7.1 Current Differential Bias Characteristic 26
7.1.1 Slopes and Thresholds 28

8. PROTECTION TIMING CHECKS 30
8.1 Phase Overcurrent Protection (P742 and P743) 30
8.2 Connect the Test Circuit 30
8.3 Performing the Test 30
8.4 Check the Operating Time 30

9. BREAKER FAILURE PROTECTION 32
9.1 Separate External 50BF Protection to the Busbar Protection 32
9.1.1 External Initiation of BF Protection 32
9.1.2 Internal initiation Breaker Failure Protection 33
9.2 Check Application Settings 34

10. IEC 61850 EDITION 2 TESTING 35
10.1 Using IEC 61850 Edition 2 Test Modes 35
10.1.1 IED Test Mode Behaviour 35
10.1.2 Sampled Value Test Mode Behaviour 35
10.2 Simulated Input Behaviour 36
10.3 Testing Examples 37

10.3.1 Test Procedure for Real Values 37
10.3.2 Test Procedure for Simulated Values - No Plant 37
10.3.3 Test Procedure for Simulated Values - With Plant 38
10.3.4 Contact Test 39

11. END TO END TESTS 40
11.1 Optical Transmitter Level 40
11.2 Verify Communication between IEDS 40

12. ON-LOAD CHECKS 41
12.1 On-Load Directional Test 41

13. FINAL CHECKS 43

1. GENERAL GUIDELINES

GE Vernova's IEDs are self-checking devices and will raise an alarm in the unlikely event of failure. This is why the commissioning tests are less extensive than those for non-numeric electronic devices or electro-mechanical relays.

To commission the devices, you (the commissioning engineer) do not need to test every function. You need only verify that the hardware is functioning correctly and that the application-specific software settings have been applied. You can check the settings by extracting them using the settings application software, or by means of the front panel interface (HMI panel).

The menu language is user-selectable, so you can change it for commissioning purposes if required.

Note: Remember to restore the language setting to the customer's preferred language on completion.

Before carrying out any work on the equipment the user should be familiar with the contents of the Safety Section or Safety Guide SFTY/4LM as well as the ratings on the equipment's rating label.

With the exception of the CT shorting contacts check, do not disassemble the device during commissioning.

If reference is made to the IED's internal settings and signals database, the menu group heading (column) text is written in upper case bold.
For example: **SYSTEM DATA**

If reference is made to the IED's internal settings and signals database, the setting cells and DDB signals are written in bold
For example: The **Language** cell in the **SYSTEM DATA** column

2. COMMISSIONING EQUIPMENT

Specialist test equipment is required to commission this product. We recognise three classes of equipment for commissioning:

- Recommended
- Essential
- Advisory

Recommended equipment constitutes equipment that is both necessary, and sufficient, to verify correct performance of the principal protection functions.

Essential equipment represents the minimum necessary to check that the product includes the basic expected protection functions and that they operate within limits.

Advisory equipment represents equipment that is needed to verify satisfactory operation of features that may be unused, or supplementary, or which may, for example, be integral to a distributed control/automation scheme.

Operation of such features may, perhaps, be more appropriately verified as part of a customer defined commissioning requirement, or as part of a system-level commissioning regime.

2.1 Recommended Commissioning Equipment

The minimum recommended equipment is a multifunctional three-phase AC current and voltage injection test set featuring:

- Controlled three-phase AC current and voltage sources,
- Transient (dynamic) switching between pre-fault and post-fault conditions (to generate delta conditions),
- Dynamic impedance state sequencer (capable of sequencing through 4 impedance states),
- Integrated or separate variable DC supply (0 - 250 V)
- Integrated or separate AC and DC measurement capabilities (0-440V AC, 0-250V DC)
- Integrated and/or separate timer,
- Integrated and/or separate test switches.

In addition, you will need:

- A portable computer, installed with appropriate software to liaise with the equipment under test (EUT).
- Typically, this software will be proprietary to the product's manufacturer (for example MiCOM S1 Agile).
- Suitable electrical test leads.
- Electronic or brushless insulation tester with a DC output not exceeding 500 V
- Continuity tester
- Verified application-specific settings files
- Minimum equipment required

2.2 Essential Commissioning Equipment

As an absolute minimum, the following equipment is required:

AC current source coupled with AC voltage source

- Variable DC supply (0 - 250V)
- Multimeter capable of measuring AC and DC current and voltage (0-440V AC, 0-250V DC)
- Timer

- Test switches
- Suitable electrical test leads
- Continuity tester

2.3 Advisory Test Equipment

Advisory test equipment may be required for extended commissioning procedures:

- Current clamp meter
- Multi-finger test plug:
  - P992 for test block type P991
  - MMLB for test block type MMLG blocks
- Electronic or brushless insulation tester with a DC output not exceeding 500 V
- KITZ K-Bus - EIA(RS)232 protocol converter for testing EIA(RS)485 K-Bus port
- EIA(RS)485 to EIA(RS)232 converter for testing EIA(RS)485 Courier/MODBUS/IEC60870-5-103/DNP3 port
- A portable printer (for printing a setting record from the portable PC) and or writeable, detachable memory device.
- Phase angle meter
- Phase rotation meter
- Fibre-optic power meter.
- Fibre optic test leads (minimum 2). 10m minimum length, multimode 50/125 µm or 62.5µm terminated with BFOC (ST) 2.5 or BFOC (LC) connectors depending on the Ethernet board ordered for testing the fibre-optic RP1 port.

3. PRODUCT CHECKS

These product checks are designed to ensure that the device has not been physically damaged prior to commissioning, is functioning correctly and that all input quantity measurements are within the stated tolerances.

If the application-specific settings have been applied to the IED prior to commissioning, you should make a copy of the settings. This will allow you to restore them later if necessary. This can be done by:

- Obtaining a setting file from the customer.
- Extracting the settings from the IED itself, using a portable PC with appropriate setting software.

If the customer has changed the password that prevents unauthorized changes to some of the settings, either the revised password should be provided, or the original password restored before testing.

Note: If the password has been lost, a recovery password can be obtained from GE Vernova.

3.1 Product Check with the Relay De-energised

The following group of tests should be carried out without the auxiliary supply being applied to the IED and, if applicable, with the trip circuit isolated.

The current and voltage transformer connections must be isolated from the IED for these checks. If a P991 test block is provided, the required isolation can be achieved by inserting test plug type P992. This open circuits all wiring routed through the test block.

Before inserting the test plug, check the scheme diagram to ensure that this will not cause damage or a safety hazard (the test block may, for example, be associated with protection current transformer circuits). The sockets in the test plug, which correspond to the current transformer secondary windings, must be linked before the test plug is inserted into the test block.

DANGER: Never open-circuit the secondary circuit of a current transformer since the high voltage produced may be lethal and could damage insulation.

If a test block is not provided, the voltage transformer supply to the IED should be isolated by means of the panel links or connecting blocks. The line current transformers should be short-circuited and disconnected from the IED terminals. Where means of isolating the auxiliary supply and trip circuit (for example isolation links, fuses and MCB) are provided, these should be used. If this is not possible, the wiring to these circuits must be disconnected and the exposed ends suitably terminated to prevent them from being a safety hazard.

3.1.1 Visual Inspection

Check the rating information under the top access cover on the front of the IED..
Check that the IED being tested is correct for the line or circuit.
Record the circuit reference and system details.
Check the CT secondary current rating and record the CT tap which is in use.

Carefully examine the IED to see that no physical damage has occurred since installation.

Ensure that the case earthing connections (bottom left-hand corner at the rear of the IED case) are used to connect the IED to a local earth bar using an adequate conductor.

3.1.2 Current Transformer Shorting Contacts

Check the current transformer shorting contacts to ensure that they close when the heavy-duty terminal block is disconnected from the current input board.

The heavy-duty terminal blocks are fastened to the rear panel using four crosshead screws. These are located two at the top and two at the bottom.

Note: Use a magnetic bladed screwdriver to minimize the risk of the screws being left in the terminal block or lost.

Pull the terminal block away from the rear of the case and check with a continuity tester that all the shorting switches being used are closed.

The following tables show the terminals between which shorting contacts are fitted.

	Shorting Contact Between Terminals	
Current Input	**P742 1A - Common - 5A**	**P743 1A - Common - 5A**
I_A	B3 - B2 - B1	A3 - A2 - A1
I_B	B6 - B5 - B4	A6 - A5 - A4
I_C	B9 - B8 - B7	A9 - A8 - A7
I_N	B12 - B11 - B10	A12 - A11 - A10

3.1.3 Insulation

Insulation resistance tests are only necessary during commissioning if explicitly requested

Isolate all wiring from the earth and test the insulation with an electronic or brushless insulation tester at a DC voltage not exceeding 500 V. Terminals of the same circuits should be temporarily connected together.

The insulation resistance should be greater than 100 MΩ at 500 V.

On completion of the insulation resistance tests, ensure all external wiring is correctly reconnected to the IED.

3.1.4 External Wiring

Check that the external wiring is correct according to the relevant IED and scheme diagrams. Ensure that phasing/phase rotation appears to be as expected.

3.1.5 Watchdog Contacts

Using a continuity tester, check that the Watchdog contacts are in the following states when energized and healthy.

Terminals	Contact State with Product De-energized
11 - 12 on power supply board	Closed
13 - 14 on power supply board	Open

3.1.6 Power Supply

Depending on its nominal supply rating, the IED can be operated from either DC only or an AC/DC auxiliary supply. The incoming voltage must be within the operating range specified below.

Without energizing the IED, measure the auxiliary supply to ensure it is within the operating range.

Nominal Supply Rating DC	Nominal Supply Rating AC RMS	DC Operating Range	AC Operating Range
24 - 48 V	N/A	19 - 65 V	N/A
48 - 110 V	30 - 100 V	37 - 150 V	24 - 110 V
110 - 240 V	100 - 240 V	87 - 300 V	80 - 265 V

Note: The IED can withstand an AC ripple of up to 15% of the upper rated voltage on the DC auxiliary supply.

Do not energize the IED or interface using the battery charger with the battery disconnected as this can irreparably damage the power supply circuitry.

Energize the IED only if the auxiliary supply is within the operating range. If a test block is provided, it may be necessary to link across the front of the test plug to connect the auxiliary supply to the IED.

3.2 Product Checks with the Relay Energised

The current and voltage transformer connections must remain isolated from the IED for these checks. The trip circuit should also remain isolated to prevent accidental operation of the associated circuit breaker.

The following group of tests verify that the IED hardware and software is functioning correctly and should be carried out with the supply applied to the relay.

3.2.1 Watchdog Contacts

Using a continuity tester, check the watchdog contacts are in the following states when energized.

Terminals	Contact State with Product Energized
11 - 12 on power supply board	Open
13 - 14 on power supply board	Closed

3.2.2 Date and Time

The date and time are stored in memory, which is backed up by a supercapacitor.

The method for setting the date and time depends on whether an IRIG-B signal is being used or not. The IRIG-B signal will override the time, day and month settings, but not the initial year setting. For this reason, you must ensure you set the correct year, even if the device is using IRIG-B to maintain the internal clock.

Set the Date and Time by one of the following methods:

- Using the front panel to set the **Date and Time** cells respectively
- By sending a courier command to the **Date/Time** cell (Courier reference 0801)

Note: If the auxiliary supply fails, the time and date will be maintained by the supercapacitor. Therefore, when the auxiliary supply is restored, you should not have to set the time and date again. To test this, remove the IRIG-B signal, and then remove the auxiliary supply. Leave the device de-energized for approximately 30 seconds. On re-energization, the time should be correct.

When using IRIG-B to maintain the clock, the IED must first be connected to the satellite clock equipment (usually a P594/RT430), which should be energized and functioning.

1. Set the IRIG-B Sync cell in the **DATE AND TIME** column to **Enabled**.
2. Ensure the IED is receiving the IRIG-B signal by checking that cell IRIG-B Status reads Active.
3. Once the IRIG-B signal is active, adjust the time offset of the universal co coordinated time (satellite clock time) on the satellite clock equipment so that local time is displayed.
4. Check that the time, date and month are correct in the Date/Time cell. The IRIG-B signal does not contain the current year so it will need to be set manually in this cell.
5. Reconnect the IRIG-B signal.

If the time and date is not being maintained by an IRIG-B signal, ensure that the IRIG-B Sync cell in **DATE and TIME** column is set to **Disabled**

1. Set the date and time to the correct local time and date using the Date/Time cell or using the serial protocol.

3.2.3 Test LEDs

On power-up, all LEDs should first flash yellow. Following this, the green "Healthy" LED should illuminate indicating that the device is healthy.

The IED's non-volatile memory stores the states of the alarm, the trip, and the user-programmable LED indicators (if configured to latch). These indicators may also illuminate when the auxiliary supply is applied.

If any of these LEDs are ON, then they should be reset before proceeding with further testing. If the LEDs successfully reset (the LED goes off), no testing is needed for that LED because it is obviously operational.

3.2.4 Test Alarm and Out of Service LEDs

The alarm and out of service LED's can be tested using the **COMMISSION TESTS** menu column.

1. Set the **Test Mode** cell to '**OutOfService**' on the P741 then select at least one zone or '**50BF Disable**' on the P742/743.
2. Check that the out of service LED illuminates continuously and the alarm LED flashes.

It is not necessary to return the **Test Mode** cell to **Disabled** at this stage because the test mode will be required for later tests.

Out of service LED behaviour for P741xxxxxxxxx5K:

- If the logic input "**All Prot Blocked**" is ON, then the '**Out of Service**' LED is NOT illuminated because this is an elected operation by the user and can be indicated on the programmable LEDs if indication is required.
- If individual zones of protection, or multiple zones, or all zones are switched out of service via external switches (i.e. using the DDB signals within the PSL), the '**Out of Service**' LED remains OFF because this is an operator manual selection. It just switches for "abnormal" operating conditions rather than for commissioning purposes.
- When selection of zones in/out of service is achieved via the Commission Test column of the menu structure in the CU, as soon as the user has the potential to switch zones in/out of service, then the '**Out of Service**' LED comes ON but no zone is out of service until, in the Commission Test column, a zone is selected to be out of service and the patent is applied.
- The '**Out of Service**' LED ON only turns off when the commissioning mode has been set to "**Disabled**" AND all zones are selected in service in the **COMMISSION TESTS** column (note: if the user wants to select a zone out of service for operational reasons, this must be done by the switches and not the setting selection in the commissioning mode).

Out of service LED behaviour for P742xxxxxxxxx5J or for P743xxxxxxxxx5K:

- The Commission Test menu structure in the PU also allows for an 'Overhaul' mode where secondary injection of the PU is permitted. In this mode the isolators must be open for testing, but all information is passed back to the CU for inclusion in the zone calculations. While in this mode the Peripheral Unit can be tested locally, secondary injections tests, for example, can be carried out (the system is stable because during the current injection there is a differential current in the CZ but not in the Zone). In this case, since the system must have primary action (i.e. open isolators/CB), the 'Out of Service' LED is ON.
- The Commission Test menu structure in a Peripheral Unit allows for a '**50BF Disabled**' mode where the PU does not initiate the breaker fail protection but can respond to commands to trip from the CU (in the event of a busbar protection trip or CB failure backtrip). In this case, since the busbar protection is not out of service, the 'Out of Service' LED remains OFF in the CU.

3.2.5 Test Trip LED

The trip LED can be tested by initiating a manual circuit breaker trip. However, the trip LED will operate during the setting checks performed later. Therefore, no further testing of the trip LED is required at this stage.

Note: The CB control function does not exist in P741. Only P742/P743 can trip/close the local circuit breakers.

3.2.6 Test User-programmable LEDs

To test these LEDs, set the Test LEDs cell to **Apply Test**. Check that all user-programmable LEDs illuminate.

3.2.7 Test Field Voltage Supply

The IED generates a field voltage of nominally 48 V that can be used to energise the opto-inputs (alternatively the substation battery may be used).

1. Measure the field voltage across terminals 7 and 9 of the power supply terminal block.
2. Check that the field voltage is within the range 40 V to 60 V when no load is connected and that the polarity is correct.
3. Repeat for terminals 8 and 10.

3.2.8 Test Opto-isolators

This test checks that all the opto-inputs on the IED are functioning correctly.

The opto-inputs should be energized one at a time. For terminal numbers, please see the external connection diagrams in the "Wiring Diagrams" appendix. Ensuring correct polarity, connect the supply voltage to the appropriate terminals for the input being tested.

The status of each opto-input can be viewed using either the **Opto I/P Status** cell in the **SYSTEM DATA** column, or the **Opto I/P Status** cell in the **COMMISSION TESTS** column.

A '1' indicates an energized input and a '0' indicates a de-energized input. When each opto-input is energized, one of the characters on the bottom line of the display changes to indicate the new state of the input.

3.2.9 Test Output Relays

This test checks that all the output relays are functioning correctly.

1. Ensure that the IED is still in test mode by viewing the **Test Mode** cell in the **COMMISSION TESTS** column. Ensure that it is set to **Contacts Blocked**.
2. The output relays should be energized one at a time. To select output relay 1 for testing, set the Test Pattern cell as appropriate.
3. Connect a continuity tester across the terminals corresponding to output relay 1 as shown in the external connection diagram.
4. To operate the output relay set the Contact Test cell to **Apply Test**.
5. Check the operation with the continuity tester.

6. Measure the resistance of the contacts in the closed state.
7. Reset the output relay by setting the Contact Test cell to **Remove Test**.
8. Repeat the test for the remaining output relays.
9. Return the IED to service by setting the Test Mode cell in the **COMMISSION TESTS** menu to **Disabled**.

Note: Make sure that the thermal ratings of anything connected to the output relays during the contact test procedure is not exceeded by the associated output relay being operated for too long. It is therefore advised that the time between application and removal of contact test is kept to a minimum.

3.2.10 Test Serial Communication Port RP1

You need only perform this test if the IED is to be accessed from a remote location with a permanent serial connection to the communications port. The scope of this test does not extend to verifying operation with connected equipment beyond any supplied protocol converter. It verifies operation of the rear communication port (and if applicable the protocol converter) and varies according to the protocol fitted.

3.2.10.1 Check Physical Connectivity

The rear communication port RP1 is presented on terminals 16, 17 and 18 of the power supply terminal block. Screened twisted pair cable is used to make a connection to the port. The cable screen should be connected to pin 16 and pins 17 and 18 are for the communication signal:

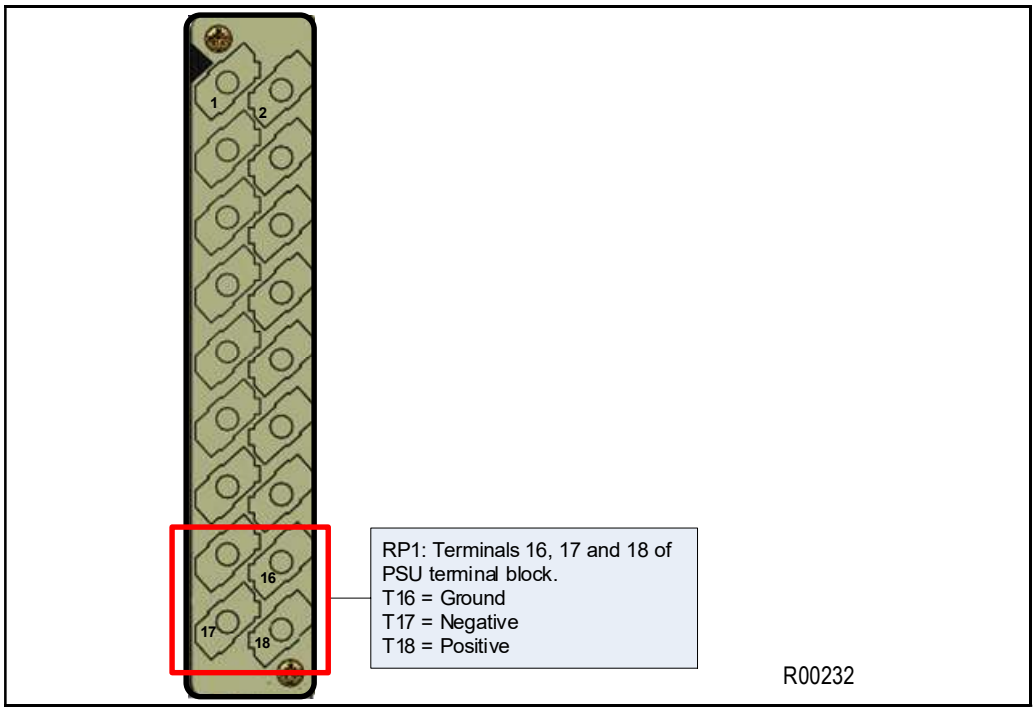

Figure 1: RP1 Physical Connection

For K-Bus applications, pins 17 and 18 are not polarity sensitive and it does not matter which way round the wires are connected. EIA(RS)485 is polarity sensitive, so you must ensure the wires are connected the correct way round (pin 18 is positive, pin 17 is negative).

If K-Bus is being used, a Kitz protocol converter (KITZ101, KITZ102 OR KITZ201) will have been installed to convert the K-Bus signals into RS232. Likewise, if RS485 is being used, an RS485-RS232 converter will have been installed.

In the case where a protocol converter is being used, a laptop PC running appropriate software (such as MiCOM S1 Agile) can be connected to the incoming side of the protocol converter. An example for K-bus to RS232 conversion is shown below. RS485 to RS232 would follow the same principle, only using a RS485-RS232 converter. Most modern laptops have USB ports, so it is likely you will also require a RS232 to USB converter too.

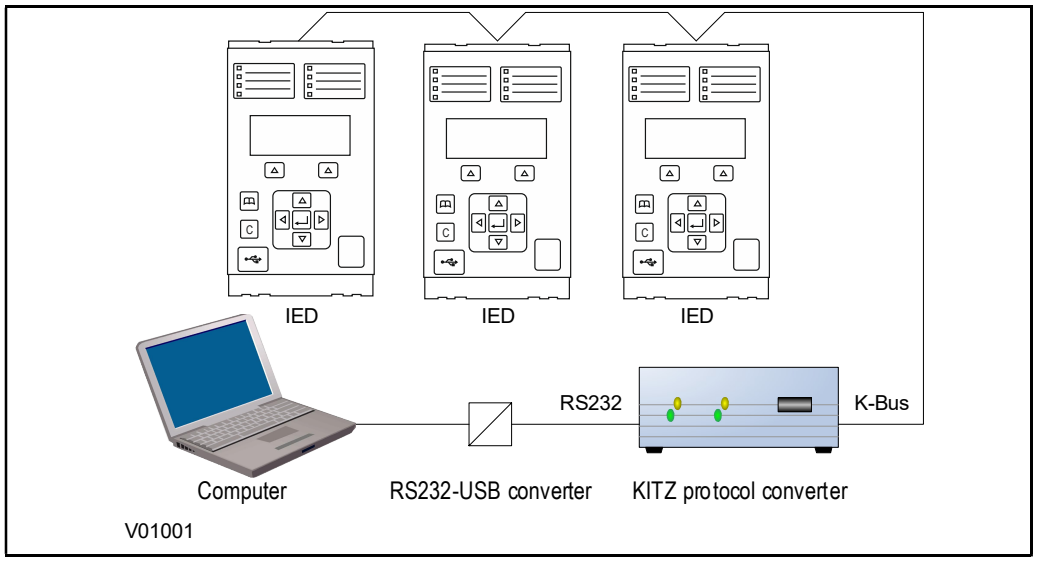

Figure 2: Remote Communication using K-Bus

Fibre Connection

Some models have an optional fibred optic communications port fitted (on a separate communications board). The communications port to be used is selected by setting the Physical Link cell in the **COMMUNICATIONS** column, the values being Copper or K-Bus for the RS485/K-bus port and Fibre Optic for the fibre optic port.

3.2.10.2 Check Logical Connectivity

The logical connectivity depends on the chosen data protocol, but the principles of testing remain the same for all protocol variants:

1. Ensure that the communications baud rate and parity settings in the application software are set the same as those on the protocol converter.
2. For Courier models, ensure that you have set the correct RP1 address
3. Check that communications can be established with this IED using the portable PC/Master Station.

3.2.11 Test Serial Communication Port RP2

RP2 is an optional second serial port board providing additional serial connectivity. It provides two 9-pin D-type serial port connectors SK4 and SK5. Both ports are configured as DTE (Date Terminal Equipment) ports. That means they can be connected to communications equipment such as a modem with a straight-through cable.

SK4 can be configured as an EIA(RS232), EIA(RS485), or K-Bus connection for Courier protocol only, whilst SK5 is fixed to EIA(RS)232 for InterMiCOM signalling only.

It is not the intention of this test to verify the operation of the complete communication link between the IED and the remote location, just the IED's rear communication port and, if applicable, the protocol converter.

The only checks that need to be made are as follows:

1. Set the **RP2 Port Config** cell in the **COMMUNICATIONS** column to the required physical protocol; (K-Bus, EIA(RS)485, or EIA(RS)232.
2. Set the IED's Courier address to the correct value (it must be between 1 and 254).

3.2.12 Test Ethernet Communication

For products that employ Ethernet communications, we recommend that testing be limited to a visual check that the correct ports are fitted and that there is no sign of physical damage.

If there is no board fitted or the board is faulty, a NIC link alarm will be raised (providing this option has been set in the **NIC Link Report** cell in the **COMMUNICATIONS** column).

3.3 Secondary Injection Tests

Secondary injection testing is carried out to verify the integrity of the VT and CT readings. All devices leave the factory set for operation at a system frequency of 50 Hz. If operation at 60 Hz is required, you must set this in the Frequency cell in the **SYSTEM DATA** column.

The PMU must be installed and connected to a 1pps fibre optic synchronizing signal and a demodulated IRIG-B signal, provided by a device such as a P594 or a REASON RT430.

Connect the current and voltage outputs of the test set to the appropriate terminals of the first voltage and current channel and apply nominal voltage and current with the current lagging the voltage by 90 degrees.

3.3.1 Test Current Inputs (P742, P743 only)

This test verifies that the current measurement inputs are configured correctly

1. Using secondary injection test equipment such as an Omicron, apply and measure nominal rated current to each CT in turn.
2. Check its magnitude using a multi-meter or test set readout. Check this value against the value displayed on the HMI panel (usually in **MEASUREMENTS 1** column).
3. Record the displayed value. The measured current values will either be in primary or secondary Amperes. If the Local Values cell in the **MEASURE'T SETUP** column is set to **Primary**, the values displayed should be equal to the applied current multiplied by the corresponding current transformer ratio (set in the **CT AND VT RATIOS** column). If the Local Values cell is set to Secondary, the value displayed should be equal to the applied current.

   Note: If a PC connected to the IED using the rear communications port is being used to display the measured current, the process will be similar. However, the setting of the Remote Values cell in the **MEASURE'T SETUP** column will determine whether the displayed values are in primary or secondary Amperes.

   The measurement accuracy of the relay is ±5%. However, an additional allowance must be made for the accuracy of the test equipment being used.

Cell in MEASUREMENTS 1 Column (02)	Corresponding CT Ratio (in 'CT and VT RATIOS' Column (0A) of Menu)
[IA Magnitude] [IB Magnitude] [IC Magnitude] [IN Magnitude]	[Phase CT Primary] [Phase CT Secondary]

3.3.2 Test Voltage Inputs

This test verifies that the voltage measurement inputs are configured correctly

1. Using secondary injection test equipment, apply and measure the rated voltage to each voltage transformer input in turn.
2. Check its magnitude using a multi-meter or test set readout. Check this value against the value displayed on the HMI panel (usually in **MEASUREMENTS 1** column).

3. Record the value displayed. The measured voltage values will either be in primary or secondary Volts. If the Local Values cell in the **MEASURE'T SETUP** column is set to Primary, the values displayed should be equal to the applied voltage multiplied by the corresponding voltage transformer ratio (set in the **CT AND VT RATIOS** column). If the Local Values cell is set to Secondary, the value displayed should be equal to the applied voltage.

   Note: If a PC connected to the IED using the rear communications port is being used to display the measured current, the process will be similar. However, the setting of the Remote Values cell in the **MEASURE'T SETUP** column will determine whether the displayed values are in primary or secondary Amperes.

   The measurement accuracy of the relay is ±5%. However, an additional allowance must be made for the accuracy of the test equipment being used.

4. ELECTRICAL INTERMICOM COMMUNICATION LOOPBACK

If the IED is used in a scheme with standard InterMiCOM communication (Electrical Teleprotection), you need to configure a loopback for testing purposes.

4.1 Setting up the Loopback

The communication path may include various connectors and signal converters before leaving the substation. We therefore advise making the loopback as close as possible to where the communication link leaves the substation.

This way, as much of the wiring as possible and all associated communication signal converters are included in the test.

1. Set **CONFIGURATION** > **InterMiCOM** to **Enabled**.
2. Set **INTERMICOM COMMS** > **Ch Statistics** and **Ch Diagnostics** to **Visible**.
3. Check that **INTERMICOM COMMS** > **IM H/W Status** displays **OK**. This means the InterMiCOM hardware is fitted and initialized.

4.2 Loopback Test

INTERMICOM COMMS > **Loopback Mode** allows you to test the InterMiCOM channel. In normal service it must be disabled. **INTERMICOM COMMS** > **Loopback Status** shows the status of the InterMiCOM loopback mode

Note: If **INTERMICOM COMMS** > **Loopback Mode** is set to **Internal**, only the internal software of the device is checked. This is useful for testing functionality if no communications connections are made. Use the 'External' setting during commissioning because it checks both the software and hardware. When the IED is switched into either Internal or External Loopback Mode it automatically inhibits InterMiCOM messages to the PSL by setting all eight InterMiCOM message command states to zero

Set **INTERMICOM COMMS** > **Loopback Mode** to **External** and form a communications loopback by connecting the transmit signal (pin 2) to the receive signal (pin 3).

Note: The DCD signal must be held high (by connecting pin 1 to pin 4) if the connected equipment does not support DCD.

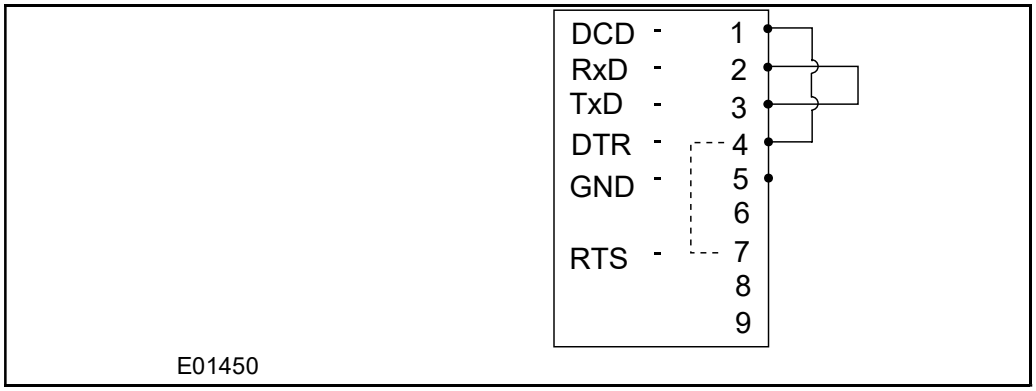

Figure 3: InterMicom Loopback Testing

The loopback mode is shown on the front panel by an Alarm LED and the message IM Loopback on the LCD.

Check that all connections are correct and the software is working correctly.

Check that **INTERMICOM COMMS** > **Loopback Status** shows OK.

4.2.1 InterMiCOM Command Bits

To test the InterMiCOM command bits, go to the **INTERMICOM COMMS** column and do the following:

1. Enter any test pattern in the **Test Pattern** cell in the by scrolling through and changing selected bits between 1 and 0. The entered pattern is transmitted through the loopback.
2. Check that the **IM Output Status** cell matches the applied Test Pattern.
3. Check that all 8 bits in the **IM Input Status** cell are zero.

4.2.2 InterMICOM Channel Diagnostics

Check that the following cells in the **INTERMICOM COMMS** column all read **OK**.

- **Data CD Status**
- **FrameSync Status**
- **Message Status**
- **Channel Status**
- **IM H/W Status**

4.2.3 Simulating a Channel Failure

1. Simulate a failure of the communications link by breaking a connection and checking that some of these cells show Fail.
2. Restore the communications loopback and ensure that the four diagnostic cells display OK.

Note: Some or all of these cells show Fail depending on the communications configuration and the way the link has failed.

4.2.4 Loopback Removal and Establishing Service Condition

When the above loopback tests are complete, switch the InterMiCOM channel back into service. Set **Loopback Mode** to **Disabled** and restore the Tx and Rx connections.

The following checks can be made if the remote end is actively communicating, if this is not the case then a comprehensive test cannot be performed until the two ended system is established.

Observe that the amber Alarm LED and an LCD alarm message, **IM Loopback** are not present. Check that the **IM Output Status** cell pattern at the local relay matches with the **IM Input Status** at the remote end and vice versa.

Further checks will be necessary to ensure that the communications between the two relays in the scheme are reliable. Set **INTERMiCOM COMMS > Ch Statistics** to **Visible** and view a list of channel statistics and diagnostics. The Rx count for Direct, Permissive and Blocking signals (subject to setting) will rise rapidly in proportion to Baud rate setting, whilst the Rx count for “NewData” and “Errored” and the percentage of “Lost Messages” must remain close to zero. Also, all status indications (see above) must display “OK”. That would mean that the comms are of a good quality and that the EIA(RS)232 InterMiCOM has been successfully put back in service.

4.2.5 Current Differential Communications

This test verifies that the P742 or P743 relay’s fibre optic communications ports used for communications to the P741 Central Unit, are operating correctly.

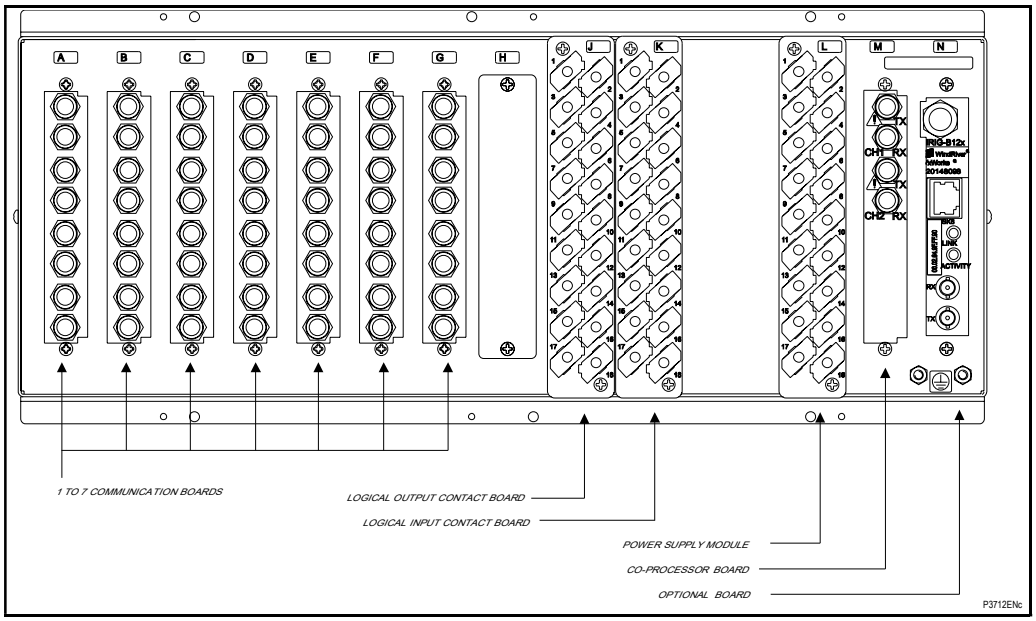

Figure 4: P741 Rear Terminal Blocks and Communication Ports

NEVER look into optical fibres or optical output connections. Always use optical power meters to determine operation or signal level.

From the central unit, the cell [**PU CONF & STATUS**, **PU connected**] displays the list of peripheral units connected to the central unit.

From the peripheral unit, it is possible to check communication with the central unit by disconnecting the optical fibre, and an alarm “Fibre Com Error” should appear.

5. COMMISSIONING TEST MENU

The IED provides several test facilities under the **COMMISSION TESTS** menu heading. There are menu cells that allow you to monitor the status of the opto-inputs, output relay contacts, internal Digital Data Bus (DDB) signals and user-programmable LEDs.

5.1 Test Mode

Peripheral Unit:

This cell allows you to perform secondary injection testing. It also lets you test the output contacts directly by applying menu-controlled test signals.

Two test modes are available:

- In the 'CB Failure Protection (50BF) disabled' mode, all tripping information from the external relay are not taken into account. The topology algorithm forwards the feeder positions to the central unit as normal. As the peripheral unit continues to monitor the analogue values the central unit will maintain a balanced condition with the remainder of the system still in normal operation. However, the CB failure backtrip information will not be sent to the Central Unit. The local protections (Dead Zone, Overcurrent, Earth Fault) are still enabled, and the PU can retrip the breaker. However, the Peripheral Unit can react to a fault condition by creating a CB fail condition and back tripping the zone(s) if the CU sends a trip order (87BB or 50BF backtrip), to clear a genuine fault).
- In the 'Overhaul' mode, the feeder is totally disconnected from the system because all the isolators are open, but all information is passed back to the central unit for inclusion in zone calculations and hence the protection scheme. Hence the central unit can keep the zone elements in service as the contribution of this feeder will be considered to be zero. (The CT is still used by the Check Zone element).

  While in this mode the peripheral unit can be tested locally, for example secondary injections tests can be carried out (The system is stable because during the current injection there is a differential current in the CZ but not in the Zone).

  In Overhaul mode the DZ function is disabled.

To go into test mode, select the **Test Mode** option in the **Test Mode** cell. This takes the IED out of service causing an alarm condition to be recorded and the **Out of Service** LED to illuminate This also freezes any information stored in the **CB CONDITION** column.

Once testing is complete, return the device back into service by setting the **Test Mode** Cell back to **Disabled**.

Central Unit:

This cell allows commissioning of busbar and general breaker failure protection. It also lets you test the output contacts directly by applying menu-controlled test signals.

In Test Mode, the output contacts are still active. To disable the output contacts, you must select the **Contacts Blocked** option.

To go into test mode, select the **Test Mode** option in the **Test Mode** cell. This takes the IED out of service causing an alarm condition to be recorded and the **Out of Service** LED to illuminate. This also freezes any information stored in the **CB CONDITION** column.

Once testing is complete, return the device back into service by setting the **Test Mode** Cell back to **Disabled**.

When the cell is in Test Mode, the Scheme Logic still drives the output relays, which could result in tripping of circuit breakers. To avoid this, set the Test Mode cell to Contacts Blocked.

Note: Test **mode** and **Contacts Blocked** mode can also be selected by energizing an opto-input mapped to the Test Mode signal, and the Contact Block signal respectively.

5.2 Busbar Monitoring (P741 only)

The '**BB monitoring**' cell is used to select the status of each zone. This cell has a binary string with one bit per zone which can be set to '1' to disable busbar protection and '0' to keep the zone in operating mode. When a zone is set to '1', the current sum calculation remains active for monitoring, but a trip order cannot be generated by the busbar protection, only from the breaker failure protection. Zones can be in busbar monitoring when other zones remain active.

5.3 Busbar (BB) & Circuit Breaker Fail (CBF) Disable (P741 only)

The '**BB&BF disabl**' cell is used to select the status of each zone. This cell has a binary string with one bit per zone which can be set to '1' to disable busbar & breaker failure protection and '0' to maintain the zone in operating mode. When a zone is set to '1', the current sum calculation remains active for monitoring, but trip orders cannot be sent by either the busbar protection or the breaker failure protection. Zones can be in '**BB&BF disabl**' when other zones remain active.

6. SETTING CHECKS

The setting checks ensure that all the application-specific settings (both the IED's function and programmable scheme logic settings) have been correctly applied.

Note: If applicable, the trip circuit should remain isolated during these checks to prevent accidental operation of the associated circuit breaker.

Note: For busbar protection stability reasons, whatever is the maintenance mode selected, the Check Zone will never be disabled, thus, the time to inject current shall be shorter than the ID>1 set timer to avoid Circuitry Fault alarms.

6.1 Apply Application-specific Settings

There are two methods of applying the settings to the relay:

- Transferring settings to the IED from a pre-prepared setting file using MiCOM S1 Agile
- Enter the settings manually using the IED's front panel HMI

6.1.1 Transferring Settings from a Settings File

This is the preferred method for transferring function settings. It is much faster and there is a lower margin for error.

1. Connect a PC running the Settings Application Software to the IED's front port, or a rear Ethernet port.
2. Alternatively connect to the rear Courier communications port, using a KITZ protocol converter if necessary.
3. Power on the IED
4. Enter the IP address of the device if it is Ethernet enabled
5. Right-click the appropriate device name in the System Explorer pane and select **Send**
6. In the Send to dialog select the setting files and click **Send**

Note: The device name may not already exist in the system shown in System Explorer. In this case, perform a Quick Connect to the IED, then manually add the settings file to the device name in the system. Refer to the Settings Application Software help for details of how to do this.

6.1.2 Entering Settings using the HMI

1. Starting at the default display, press the Down cursor key to show the first column heading.
2. Use the horizontal cursor keys to select the required column heading.
3. Use the vertical cursor keys to view the setting data in the column.
4. To return to the column header, either press the Up cursor key for a second or so or press the **Cancel** key once. It is only possible to move across columns at the column heading level.
5. To return to the default display, press the Up cursor key or the Cancel key from any of the column headings. If you use the auto-repeat function of the Up cursor key, you cannot go straight to the default display from one of the column cells because the auto-repeat stops at the column heading.
6. To change the value of a setting, go to the relevant cell in the menu, then press the **Enter** key to change the cell value. A flashing cursor on the LCD shows that the value can be changed. You may be prompted for a password first.
7. To change the setting value, press the vertical cursor keys. If the setting to be changed is a binary value or a text string, select the required bit or character to be changed using the left and right cursor keys.
8. Press the **Enter** key to confirm the new setting value or the **Clear** key to discard it. The new setting is automatically discarded if it is not confirmed within 15 seconds.

9. For protection group settings and disturbance recorder settings, the changes must be confirmed before they are used. When all required changes have been entered, return to the column heading level and press the down cursor key. Before returning to the default display, the following prompt appears.

```
Update
settings?

ENTER or CLEAR
```

10. Press the **Enter** key to accept the new settings or press the **Clear** key to discard the new settings.

Note: If the menu time-out occurs before the setting changes have been confirmed, the setting values are also discarded.
Control and support settings are updated immediately after they are entered, without the Update settings prompt.
It is not possible to change the PSL using the IED's front panel HMI.

Care: Where the installation needs application-specific PSL, the relevant .psl files, must be transferred to the IED, for each and every setting group that will be used. If you do not do this, the factory default PSL will still be resident. This may have severe operational and safety consequences.

6.2 How to Measure the Burden Resistance (R_B)

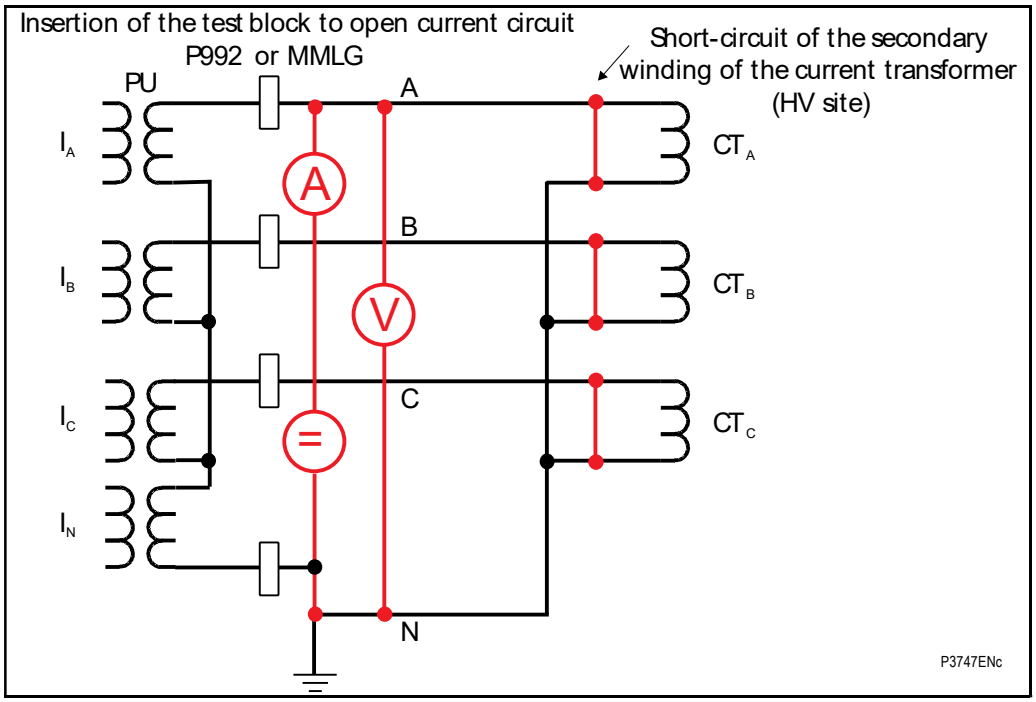

Figure 5: Wiring

1. Short-circuit the secondary winding of the HV current transformer (see above)
2. Open the wiring by inserting a test block
3. Connect the current testing circuit of the test block (phase + neutral)
4. Inject a current (1A recommended) and measure the voltage at the resistive circuit terminals
5. An excel tool is available to help calculate the values below accurately

6. Calculate the load resistance R_B per phase using the following equation:

   $R_B = U_{measured}/I_{injected}$

Repeat the above operation for each resistive circuit:

RAN between loads A and N

RBN between loads B and N

RCN between loads C and N

RAB between loads A et B

6.2.1 RB_{ph}/RB_N is close to 1

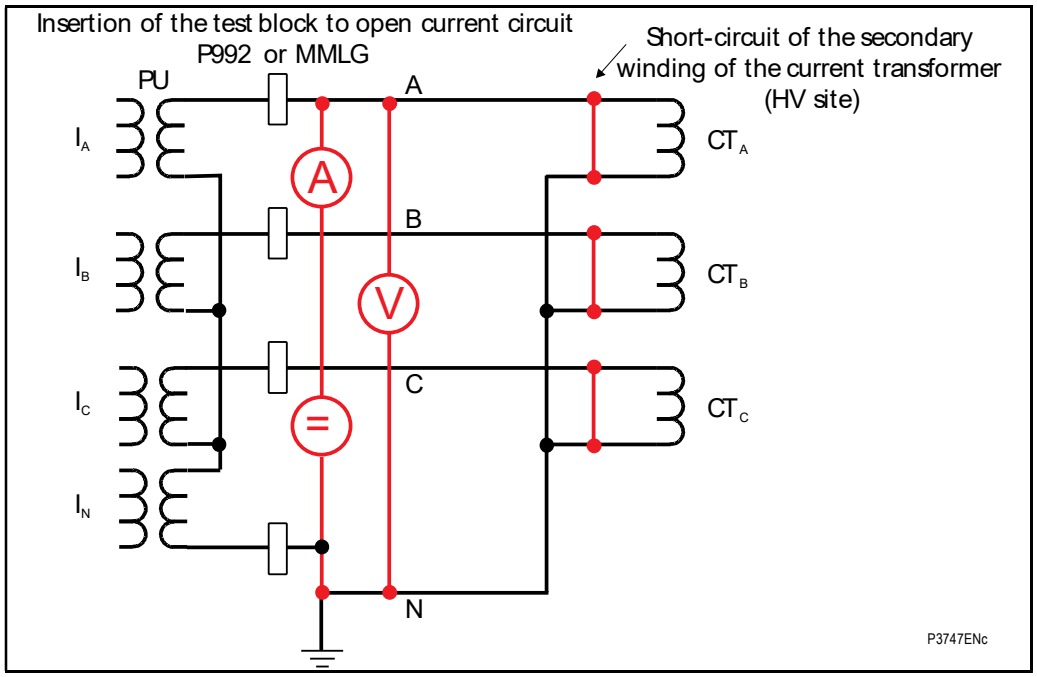

$RB_A = (RAB + RAN - RBN)/2$

$RB_N = RAN - RB_A$

$RB_B = RAB - RB_A$

$RB_C = RCN - RB_N$

6.2.2 RB_{Ph}/RB_N is close to 3

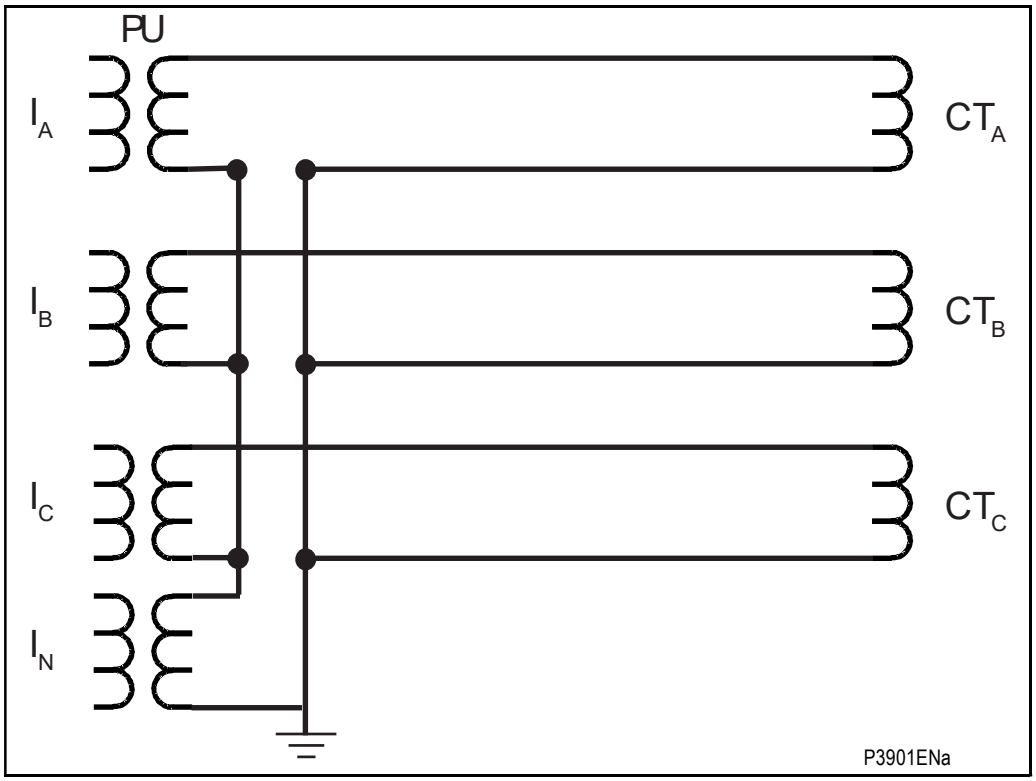

$RB_A = RAN/2$

$RB_B = RBN/2$

$RB_C = RCN/2$

$RB_N = (RB_A + RB_B + RB_C)/9$

The highest of the 3 phase values must be multiplied by 1.25 (25% increase at a 75°C temperature) and set in cell [**CT AND VT RATIOS**, **RB in ohms**].

The average of the 3 phase values (RB_A, RB_B, RB_C) should be divided by the neutral resistance, RB_N, and set in cell [**RB in ohms**, **RB_{Ph}/RB_N**].

Note: The use of the excel spreadsheet tool called “LeadBurdenR” is strongly recommended to calculate these values.

6.3 Demonstrate correct relay operation

The purpose of these tests is as follows:

- To determine that the primary protection function of the relay, current differential, can trip according to the correct application settings.
- To verify correct setting of any backup phase overcurrent protection.
- To verify correct assignment of the inputs, relays and trip contacts, by monitoring the response to a selection of fault injections.

7. CURRENT DIFFERENTIAL PROTECTION

7.1 Current Differential Bias Characteristic

1. In the **CONFIGURATION** column, disable all protection elements other than the one being tested.
2. Make a note of which elements need to be re-enabled after testing.
3. Connect the test circuit.
4. Use an injection test set to feed the relays with one or two currents variable in phase and magnitude.

If only one current is available:

Figure 6: is used for a distributed solution when only one peripheral unit is available.

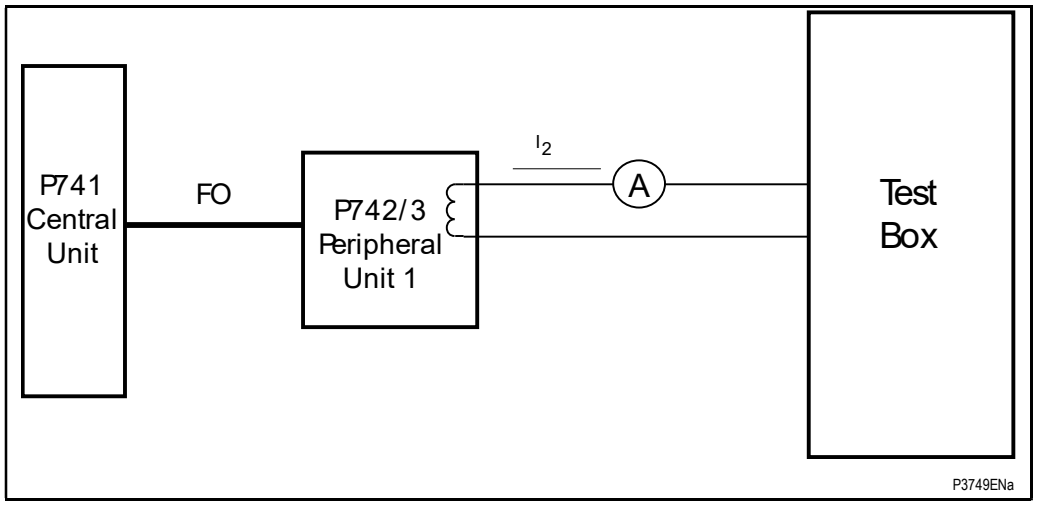

Figure 6: Connection for Bias Characteristic Testing

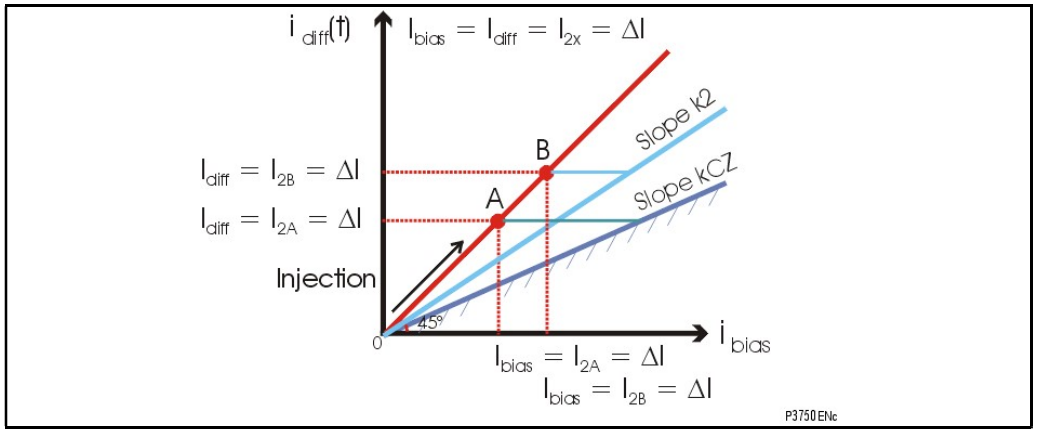

An increasing current I_2 is injected into a phase (and neutral) of the PU1 which is used as differential and bias current.

$I_{diff} = I_{bias} = I_2$

K2: Zone percentage bias, Characteristic limit: I_{diff} = ID>2

KCZ: Check Zone percentage bias, Characteristic limit: I_{diff} = IDCZ>2

In this case, we increase I_2 from 0 to A then B point until the differential element operates:

KCZ: Check Zone percentage bias, Characteristic limit: I_{diff} = IDCZ>2, point A

K2: Zone percentage bias, Characteristic limit: I_{diff} = ID>2, point B

When we reach point A the Central Unit LED 8 and relay 8 will operate and when we reach point B the differential element will operate.

Note 1: I_D>1 alarm timer will be set to 100s during the test.

Note 2: This test does not allow checking the slopes but only the thresholds.

If 2 currents are available:

This method is preferred whenever possible.

Note: The 2 PUs can have different CT ratios. This must be taken into account when injecting at the CT secondary side.

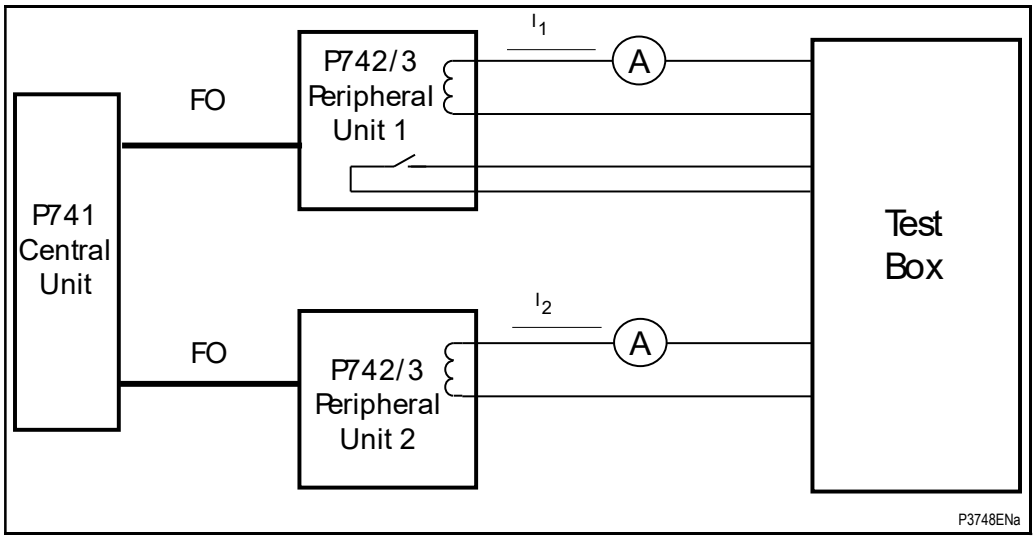

Figure 7: Connection for Bias Characteristic Testing - Centralized Solution

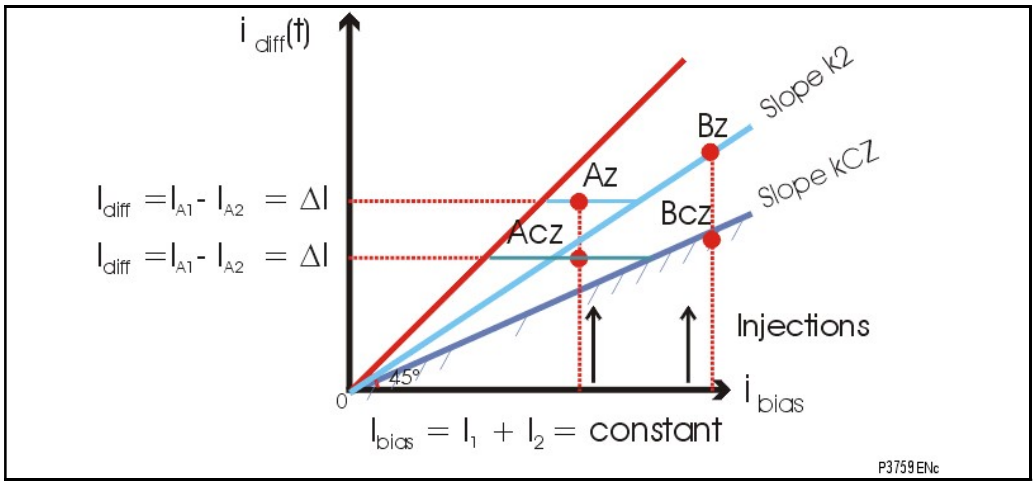

Note: The easiest way to test the thresholds is to inject an increasing slope for I_1 and a decreasing slope for I_2. The $I_{bias} = I_1 + I_2$ is thus constant and $\Delta I = I_{diff} = I_2 - I_1$ is increasing.

IMPORTANT: FOR THE CHECK ZONE, THE I_{BIAS} INCLUDES ALL THE SUBSTATION FEEDER CURRENTS.

To test the thresholds:

I_{bias} is fixed to the lowest value of ID>2/k2 and IDCZ>2/kCZ, the Az and Acz points will thus be ID>2 and IDCZ>2. So $I_{bias} = I_1 + I_2$ = fixed value (Points A)

To test the slopes:

I_{bias} is fixed to a value greater than ID>2/k2 and IDCZ>2/kCZ the Bz and Bcz points will thus be I_{bias} x k2 and I_{bias} x kCZ. So $I_{bias} = I_1 + I_2$ = fixed value (Points B)

When we reach point Xcz the Central Unit LED 8 and relay 8 will operate and when we reach point Xz the differential element will operate.

To calculate the slope k, $k = (I_1 – I_2)/(I_1 + I_2)$

The differential current will increase twice the value ΔI.

Note 1: I_D>1 alarm timer will be set to 100s during the test.

Note 2: Whenever possible, inject 2 × I_D>2. Alternatively, the minimum current must be higher than 1.7 × I_D>2 at 60Hz and I.42 × I_D>2 at 50Hz to ensure a 15ms tripping time

7.1.1 Slopes and Thresholds

If an LED has been assigned in central or/and peripheral units to display the trip information, these may be used to indicate correct operation. If not, use monitor options, as follows.

1. Go to Central Unit (P741) GROUP1--> **DIFF BUSBAR PROT** and set **I_D>1 Alarm timer** to 100s
2. For P742/3 go to **COMMISSION TESTS** > **Monitor Bit 1**. Change cell to **BUSBAR_TRIPPING**. The **Test Port Status** cell will set or reset the bits that now represent **BUSBAR_TRIPPING**, with the rightmost bit representing Busbar Trip. From now on monitor the **Test Port Status** cell. Make a note of which elements need to be re-enabled or re-set after testing.

<u>Test of I_D>2:</u>

I_D>1 Alarm Timer should be set to 100s during testing.

Inject a I_2 current smaller than I_D>2 and slowly increase I_2 until tripping.

<u>Test of the operating time of the differential element:</u>

Inject a I_2 current greater than twice I_D>2 threshold and measure the operating time of the differential element.

<u>Test of I_D>1:</u>

I_D>1 Alarm Timer should be set to 100ms.

Inject a I_2 current smaller than I_D>1 and slowly increase I_2 until circuit fault appears (LED Alarm of LED circuitry fault).

<u>Test of I_D>1 Alarm Timer:</u>

I_D>1 Alarm Timer should be set to 5s.

Inject a I2 current greater than twice the I_D>1 threshold and check that the Circuitry Fault Alarm is coming in 5s.

Note: The same tests can be applied for the Differential Sensitive Earth Fault Protection.

Note: Sensitive Differential Earth Fault (SDEF) is 20ms delayed and controlled by a settable threshold Ibias ph> to unblock/block the sensitive element depending on the restrain phase currents.

IMPORTANT NOTE: Check that if the SDEF is enabled, all the CTs are of the same standard.

When the tests are completed, restore the original settings of any elements which were disabled for testing purposes. Use the **CONFIGURATION** column.

8. PROTECTION TIMING CHECKS

There is no need to check every protection function. Only one protection function needs to be checked as the purpose is to verify the timing on the processor is functioning correctly.

8.1 Phase Overcurrent Protection (P742 and P743)

If the overcurrent protection function is being used, test the overcurrent protection for stage 1.

1. Check for any possible dependency conditions and simulate as appropriate.
2. In the **CONFIGURATION** column, disable all protection elements other than the one being tested.
3. Make a note of which elements need to be re-enabled after testing.
4. Connect the test circuit.
5. Perform the test.
6. Check the operating time.

8.2 Connect the Test Circuit

1. Use the PSL to determine which output relay will operate when an overcurrent trip occurs.
2. Use the output relay assigned to **Trip Output A**.
3. Use the PSL to map the protection stage under test directly to an output relay.

   Note: If using the default PSL, use output relay 3 as this is already mapped to the DDB signal Trip Command Out.

4. Connect the output relay so that its operation will trip the test set and stop the timer.
5. Connect the current output of the test set to the A-phase current transformer input.
6. Ensure that the timer starts when the current is applied.

8.3 Performing the Test

1. Ensure that the timer is reset.
2. Apply a current of twice the setting shown in the **I>1 Current Set** cell in the **OVERCURRENT** column.
3. Note the time displayed when the timer stops.
4. Check that the red trip LED has illuminated.

8.4 Check the Operating Time

Check that the operating time recorded by the timer is within the range shown below.

For all characteristics, allowance must be made for the accuracy of the test equipment being used.

Characteristic	Operating Time at Twice Current Setting and Time Multiplier/Time Dial Setting of 1.0	
	Nominal (Seconds)	Range (Seconds)
DT	I>1 Time Delay setting	Setting ±2%
IEC S Inverse	10.03	9.53 - 10.53
IEC V Inverse	13.50	12.83 - 14.18
IEC E Inverse	26.67	24.67 - 28.67
UK LT Inverse	120.00	114.00 - 126.00
IEEE M Inverse	0.64	0.61 - 0.67
IEEE V Inverse	1.42	1.35 - 1.50
IEEE E Inverse	1.46	1.39 - 1.54

Characteristic	Operating Time at Twice Current Setting and Time Multiplier/Time Dial Setting of 1.0	
	Nominal (Seconds)	Range (Seconds)
US Inverse	0.46	0.44 - 0.49
US ST Inverse	0.26	0.25 - 0.28

Note: With the exception of the definite time characteristic, the operating times given are for a Time Multiplier Setting (TMS) or Time Dial Setting (TDS) of 1. For other values of TMS or TDS, the values need to be modified accordingly.

Note: For definite time and inverse characteristics there is an additional delay of up to 0.02 second and 0.08 second respectively.
You may need to add this to the IED's acceptable range of operating times.

On completion of the tests, you must restore all settings to customer specifications.

9. BREAKER FAILURE PROTECTION

9.1 Separate External 50BF Protection to the Busbar Protection

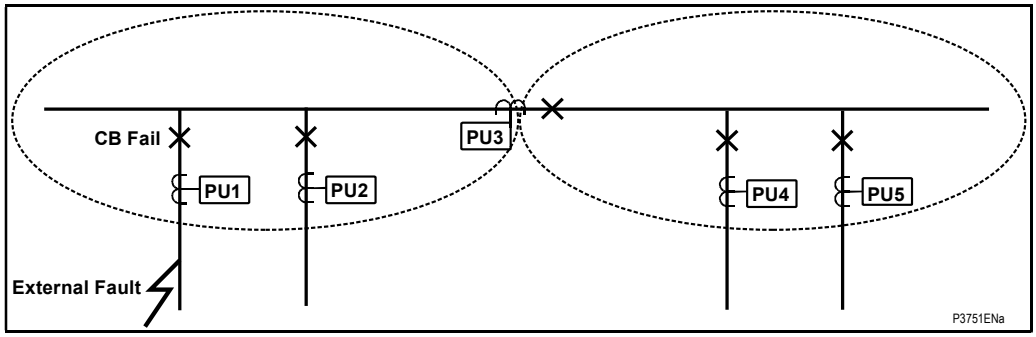

Figure 8: Separate External 50BF Protection to the Busbar Protection

For example, in Figure 8:, we simulate a CB fail in feeder 1 (PU1). Therefore, we energize the opto input “External CB Fail” of the PU1 and we check that the central unit issues a tripping order to PU2 and PU3.

Note: If the I>BB or IN>BB are enabled in menu “Busbar Trip Confirm” in Peripheral Unit, the CB fail trip command issued by the Central Unit will be confirmed by a measured phase currents or neutral currents greater than I>BB (Phase) or IN>BB (Earth).

For example, PU2 and PU3 will operate only if the phase currents > I>BB else the local trip will not be confirmed.

The trip of the backup phase overcurrent or earth fault overcurrent protection initiates, as described above, the timers tBF3 and tBF4.

9.1.1 External Initiation of BF Protection

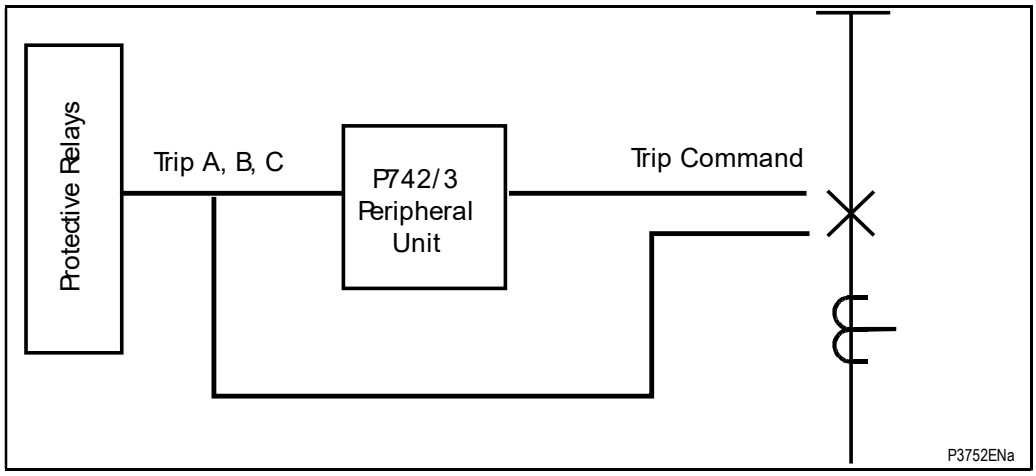

Figure 9: External Initiation of BF Protection

<u>To test the retrip:</u>

As shown in the Figure 9:, we initiate the opto inputs “External Trip A, B, C” and apply a current twice the I< threshold.

Check that the PU issue a retrip order after the settable time tBF3.

IMPORTANT: THE TIME INDICATED ON THE PU LCD IS THE DURATION OF THE OPERATION OF THIS PU TRIP COMMAND.

The fast reset retrip order is equal to the fault clearance time + 13ms - tBF3 pick-up time.

For example, if tBF3 = 50ms and the fault is cleared after 60ms, the PU displayed value will be 23ms.

To test the backtrip:

Do the same tests as for retrip however apply a faulty current for more than tBF4 and check that the backtrip signal is sent to the CU.

Check that PU2 and PU3 connected to the bus-section 1 are tripped by the CU.

Note: If the I>BB or IN>BB are enabled in menu "Busbar Trip Confirm" in Peripheral Unit, the CB fail trip command issued by the Central Unit will be confirmed by a measured phase currents or neutral currents greater than I>BB (Phase) or IN>BB (Earth).

For example: PU2 and PU3 will operate only if the phase currents > I>BB else the local trip will not be confirmed.

CB unavailable:

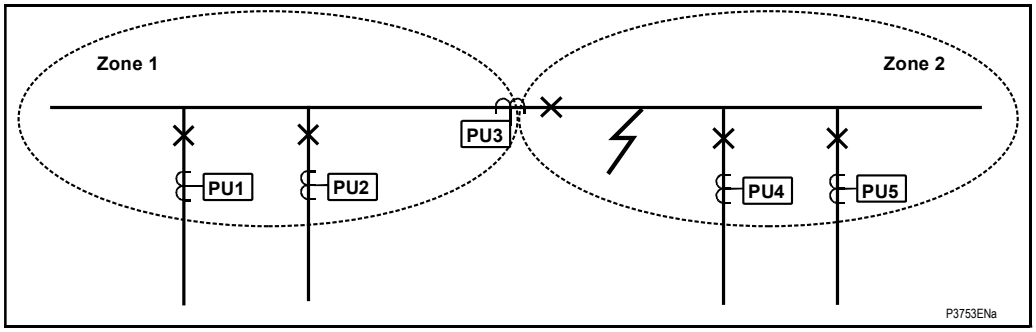

Figure 10: CB Unavailable

Apply an internal fault in zone 2 and energize the opto input of PU3 "CB unavailable" and check that both bus-section 1 tripped simultaneously.

Note: If the input "CB unavailable" is energized, the CB will be not tripped and is normally used only for bus-coupler.

IMPORTANT: THE TIME INDICATED ON THE CU LCD IS THE DURATION OF THE OPERATION OF THE CU TRIP ORDER + 250MS (TIME OF THE PU TO CU MINIMUM DURATION SIGNAL INFORMATION).

The time indicated on a PU LCD is the duration of the operation of this PU backtrip command with 200ms drop off.

The backtrip order is equal to (the maximum between the fault clearance time and 250 ms) - - tBF4 pick-up time.

For example, if tBF4 = 200ms and the fault is cleared before 450ms, the CU displayed value will be 450ms and the PU displayed value will be 650ms.

For example, if tBF4 = 200ms and the fault is cleared in 500ms, the CU displayed value will be 500ms and the PU displayed value will be 700ms.

9.1.2 Internal initiation Breaker Failure Protection

This Breaker failure Protection can be initiated only by a trip command issued by the Central Unit.

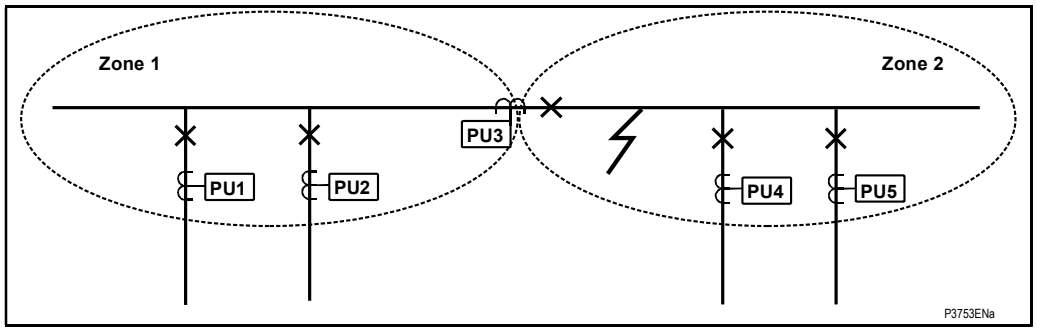

Figure 11: Internal Initiation of BF Protection

Simulate a busbar fault on bus-section 2.

Continue to apply fault current in the bus-coupler until the timer tBF1 elapsed.

Check that the retrip signal is given by PU3 and backtrip signal is sent after tBF2.

Check that the CU issued a trip command to both bus-sections (PU1, PU2 PU4 and PU5 should have operated).

Important: The time indicated on the CU LCD is the duration of the operation of the CU trip order + 250ms (time of the PU to CU minimum duration signal information).

The time indicated on a PU LCD is the duration of the operation of this PU backtrip command with 200ms drop off.

The backtrip order is equal to (the maximum between the fault clearance time and 250 ms) - tBF2 pick-up time.

For example, if tBF2 = 150ms and the fault is cleared before 400ms, the displayed value will be 400ms.

For example, if tBF2 = 150ms and the fault is cleared in 500ms, the displayed value will be 500ms.

9.2 Check Application Settings

The settings applied should be carefully checked against the required application-specific settings to ensure that they are correct and have not been altered during the injection test.

There are two methods of checking the settings:

- Extract the settings using a PC running the Settings Application Software using the IED's front port. Compare the settings transferred from the relay with the original written application-specific setting record. (For cases where the customer has only provided a printed copy of the required settings, but a portable PC is available).
- Step through the settings using the relay's operator interface and compare them with the original application-specific setting record.

Unless previously agreed, the application-specific programmable scheme logic will not be checked as part of the commissioning tests.

Due to the versatility and possible complexity of the programmable scheme logic, it is beyond the scope of these commissioning instructions to detail suitable test procedures. Therefore, when programmable scheme logic tests must be performed, written tests which will satisfactorily demonstrate the correct operation of the application-specific scheme logic should be devised by the Engineer who created it. These should be provided to the Commissioning Engineer together with the digital medium containing the programmable scheme logic setting file.

10. IEC 61850 EDITION 2 TESTING

10.1 Using IEC 61850 Edition 2 Test Modes

In a conventional substation, functionality typically resides in a single device. It is usually easy to physically isolate these functions, as the hardwired connects can simply be removed. Within digital substation architecture, however, functions may be distributed across many devices. This makes isolation of these functions difficult, because there are no physical wires that can be disconnected on an Ethernet network. Logical isolation of the various functions is therefore necessary.

With devices that support IEC 61850 Edition 2, it is possible to use a test mode to conduct online testing, which helps with the situation. The advantages of this are as follows:

- The device can be placed into a test mode, which can disable the relay outputs when testing the device with test input signals.
- Specific protection and control functions can be logically isolated.
- GOOSE messages can be tagged so that receiving devices can recognize they are test signals.
- An IED receiving simulated GOOSE or Sampled Value messages from test devices can differentiate these from normal process messages and be configured to respond appropriately.

10.1.1 IED Test Mode Behaviour

Test modes define how the device responds to test messages, and whether the relay outputs are activated or not.

You can select the mode of operation by:

- Using the front panel HMI, with the setting **IED Test Mode** under the **COMMISSION TESTS** column.
- Using an IEC 61850 control service to **System/LLN0.Mod**
- Using an opto-input via PSL with the signal **Block Contacts**

The following table summarises the IED behaviour under the different modes:

IED Test Mode Setting	Result
Disabled	• Normal IED behaviour
Test	• Protection remains enabled • Output from the device is still active • IEC 61850 message output has the 'quality' parameter set to 'test' • The device only responds to IEC61850 MMS messages from the client with the 'test' flag set
Contacts Blocked	• Protection remains enabled • Output from the device is disabled • IEC 61850 message output has quality set to ‘test’ • The device only responds to IEC 61850 MMS messages from the client with the 'test' flag set

Setting the Test or Contacts Blocked mode puts the whole IED into test mode. The IEC 61850 data object Beh in all Logical Nodes (except LPHD and any protection Logical Nodes that have Beh = 5 (off) due to the function being disabled) will be set to 3 (test) or 4 (test/blocked) as applicable.

10.1.2 Sampled Value Test Mode Behaviour

The SV Test Mode defines how the device responds to test sampled value messages. You can select the mode of operation by using the front panel HMI, with the setting **SV Test Mode** under the **IEC 61850-9.2LE*** column.

The following table summarizes the behaviour for sampled values under the different modes:

SV Test Mode Setting	Result
Disabled	• Normal IED behaviour • All sampled value data frames received with an IEC 61850 Test quality bit set are treated as invalid • The IED will display the measurement values for sampled values with the Simulated flag set but the protection elements within the IED will be blocked
Enabled	• All sampled value data frames received are treated as good, no matter if they have an IEC 61850-9-2 Simulated flag set or not

Note: *Only available in IEDs which support sample value.

10.2 Simulated Input Behaviour

Simulated GOOSE messages and sampled value streams can be used during testing.

The **Subscriber Sim** setting in the **COMMISSION TESTS** column controls whether a device listens to simulated signals or to real ones. An IEC 61850 control service to System/LPHD.Sim can also be used to change this value.

The device may be presented with both real signals and test signals. An internal state machine is used to control how the device switches between signals:

- The IED will continue subscribing to the 'real' GOOSE1 (in green) until it receives the first simulated GOOSE 1 (in red). This will initiate subscription changeover.
- After changeover to this new state, the IED will continue to subscribe to the simulated GOOSE 1 message (in red). Even if this simulated GOOSE 1 message disappears, the real GOOSE 1 message (in green) will still not be processed. This means all Virtual Inputs derived from the GOOSE 1 message will go to their default state.
- The only way to bring the IED out of this state is to set the **Subscriber Sim** setting back to False. The IED will then immediately stop processing the simulated messages and start processing real messages again.
- During above steps, IED1 will continuously process the real GOOSE 2 and GOOSE 3 messages as normal because it has not received any simulated messages for these that would initiate a changeover.

The process is represented in the following figure:

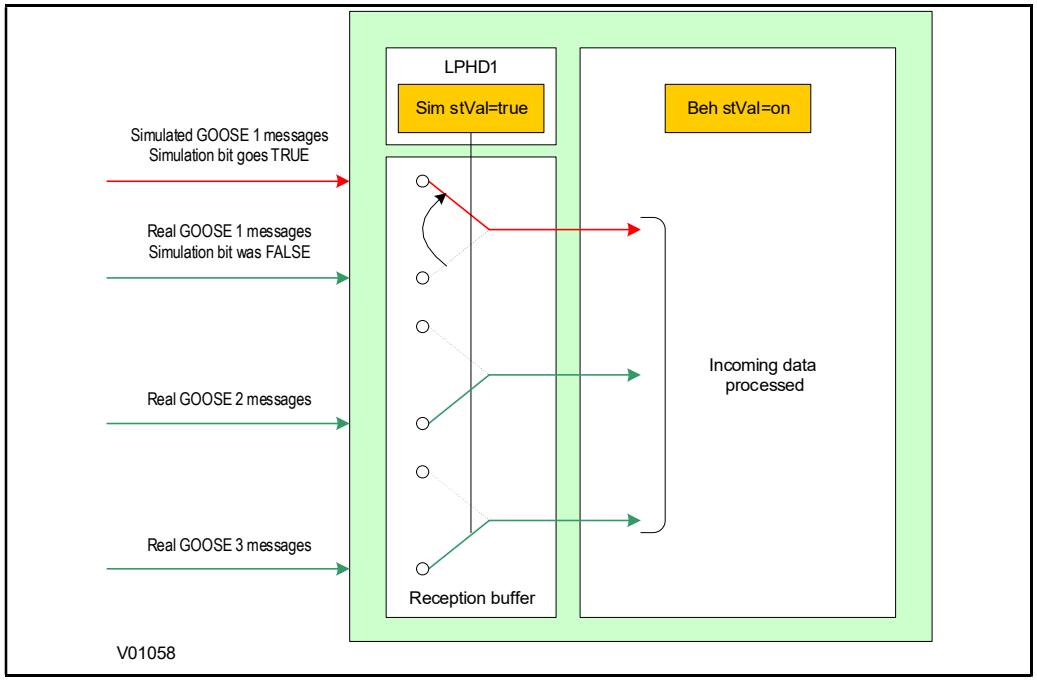

Figure 12: Simulated Input Behaviour

10.3 Testing Examples

These examples show how you test the IED with and without simulated values. Depending on the IED Test Mode, it may respond by operating plant (for example by tripping the circuit breaker) or it may not operate plant.

10.3.1 Test Procedure for Real Values

This procedure is for testing with real values without operating plant.

1. Set device into 'Contacts Blocked' Mode
   Select **COMMISSION TESTS** → **IED Test Mode** → **Contacts Blocked**
2. Confirm new behaviour has been enabled
   View **COMMISSION TESTS** → **IED Mod/Beh**, and check that it shows **Test-blocked**
3. Set device into Simulation Listening Mode
   Select **COMMISSION TESTS** → **Subscriber Sim** = **Disabled**
4. If using sampled values set the sampled values test mode
   Select **IEC 61850-9.2LE** → **SV Test Mode** → **Disabled**
5. Inject real signals using a test device connected to the merging units. The device will continue to listen to 'real' GOOSE messages and ignore simulated messages received.
6. Verify function based on test signal outputs

Binary outputs (e.g. CB trips) will not operate. All transmitted GOOSE and MMS data items will be tagged with the 'quality' parameter set to 'test', so that the receiver understands that they have been issued by a device under test and can respond accordingly. This is summarized in the following diagram:

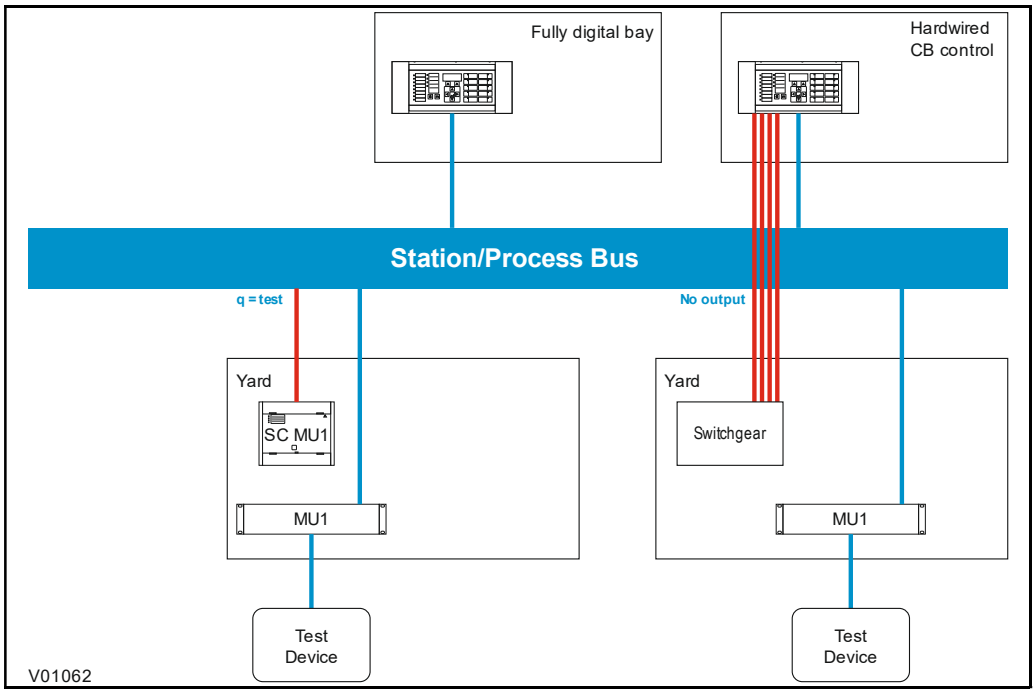

Figure 13: Test Example 1

10.3.2 Test Procedure for Simulated Values - No Plant

This procedure is for testing with simulated values without operating plant.

1. Set device into 'Contacts Blocked' Mode
   Select **COMMISSION TESTS** → **IED Test Mode** → Contacts Blocked
2. Confirm new behaviour has been enabled
   View **COMMISSION TESTS** → **IED Mod/Beh**, and check that it shows **test-blocked**

3. Set device into Simulation Listening Mode
   Select **COMMISSION TESTS → Subscriber Sim = Enabled**
4. If using sampled values set the sampled values test mode
   Select **IEC 61850-9.2LE → SV Test Mode → Enabled**
5. Inject simulated signals using a test device connected to the Ethernet network. The device will continue to listen to 'real' GOOSE messages until a simulated message is received. Once the simulated messages are received, the corresponding 'real' messages are ignored until the device is taken out of test mode. Each message is treated separately, but sampled values are considered as a single message.
6. Verify function based on test signal outputs

Binary outputs (e.g. CB trips) will not operate. All transmitted GOOSE and MMS data items will be tagged with the 'quality' parameter set to 'test', so that the receiver understands that they have been issued by a device under test and can respond accordingly. This is summarized in the following diagram:

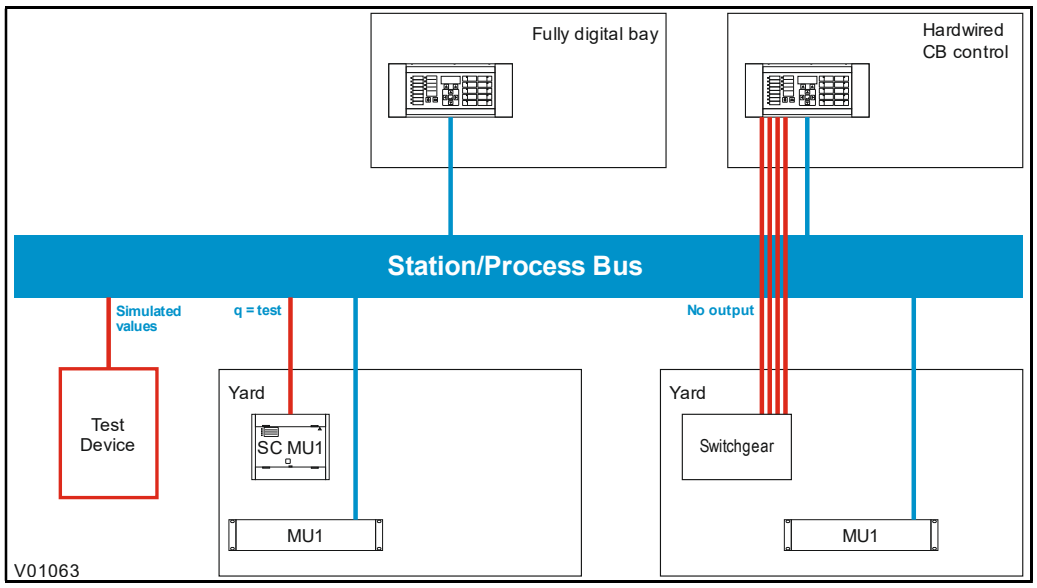

Figure 14: Test Example 2

10.3.3 Test Procedure for Simulated Values - With Plant

This procedure is for testing with simulated values with operating plant.

1. Set device into 'Contacts Blocked' Mode
   Select **COMMISSION TESTS → IED Test Mode → Test**
2. Confirm new behaviour has been enabled
   View **COMMISSION TESTS → IED Mod/Beh**, and check that it shows **Test**
3. Set device into Simulation Listening Mode
   Select **COMMISSION TESTS → Subscriber Sim = Enabled**
4. If using sampled values set the sampled values test mode
   Select **IEC 61850-9.2LE → SV Test Mode → Enabled**
5. Inject simulated signals using a test device connected to the Ethernet network.
   The device will continue to listen to 'real' GOOSE messages until a simulated message is received. Once the simulated messages are received, the corresponding 'real' messages are ignored until the device is taken out of IED test mode. Each message is treated separately, but sampled values are considered as a single message.

6. Verify function based on test signal outputs.

   Binary outputs (e.g. CB trips) will operate as normal. All transmitted GOOSE and MMS data items will be tagged with the 'quality' parameter set to 'test', so that the receiver understands that they have been issued by a device under test and can respond accordingly. This is summarised in the following diagram:

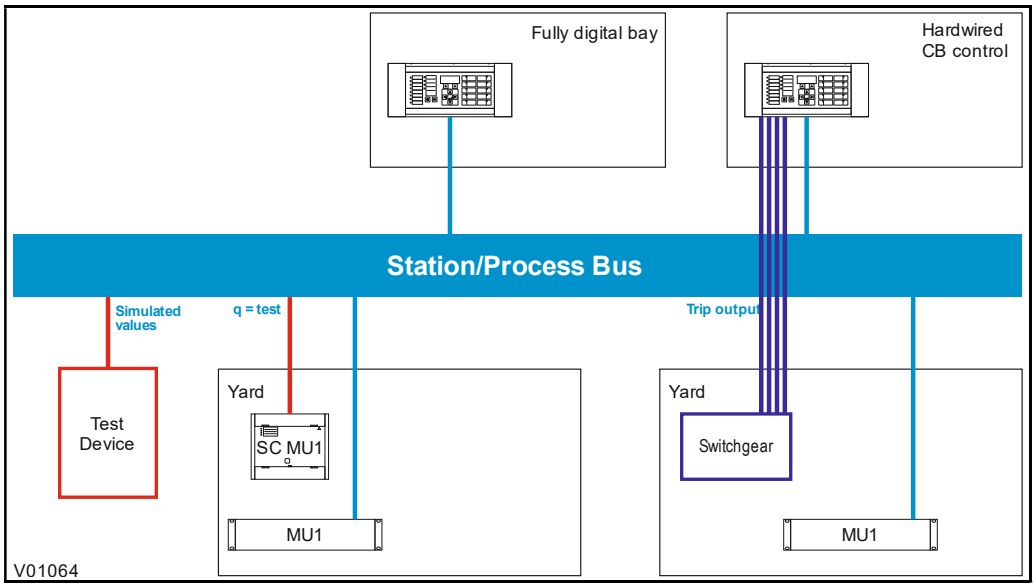

Figure 15: Test Example 3

10.3.4 Contact Test

The **Apply Test** command in this cell is used to change the state of the contacts set for operation.

If the device has been put into 'Contact Blocked' mode using an input signal (via the **Block Contacts** DDB signal) then the **Apply Test** command will not execute. This is to prevent a device that has been blocked by an external process having its contacts operated by a local operator using the HMI.

If the **Block Contacts** DDB is not set and the **Apply Test** command in this cell is issued, contacts change state and the command text on the LCD changes to **No Operation**. The contacts remain in the Test state until reset by issuing the **Remove Test** command. The command text on the LCD shows **No Operation** after the **Remove Test** command has been issued.

Note: When the IED **Test Mode** cell is set to **Contacts Blocked**, the **Relay O/P Status** cell does not show the current status of the output relays so cannot be used to confirm operation of the output relays. Therefore, it is necessary to monitor the state of each contact in turn.

11. END TO END TESTS

Verify communications between Peripheral units (P742 or P743) and Central Unit (P741) - Advisable for distributed scheme.

When restoring direct fibre connections, check the optical power level received from the remote IED(s).

1. Remove the loopback test fibres and at both ends of each channel used, reconnect the fibre optic cables for communications between IEDs.
2. For each channel fitted, remove the fibre connecting to the optical receiver (RX).
3. Using an optical power meter, measure the strength of the signal received from the remote IED. The measurements should be between -25.4 dBm and -16.8 dBm for 850 nm fibre connections and between -37 dBm and -7 dBm for 1300 nm fibre connections
4. Record the received power level(s).
5. Reconnect the fibre(s) to the IED receiver(s).

NEVER look directly into the transmit port or the end of an optical fibre, as this could severely damage your eyes.

11.1 Optical Transmitter Level

1. Using an appropriate fibre-optic cable, connect the optical transmitter (Tx) to an optical power meter.
2. Check that the average power transmitted is within the range -16.8 dBm to -22.8 dBm.
3. Record the transmit power level.
4. Connect the appropriate optical fibre to connect the P591 transmitter to the IED's optical receiver
5. Return to the IED

11.2 Verify Communication between IEDS

1. Reset any alarm indications and check that no further communications failure alarms are raised.

12. ON-LOAD CHECKS

Onload checks are potentially very dangerous and may only be carried out by qualified and authorised personnel.

Onload checks can only be carried out if there are no restrictions preventing the energisation of the plant, and the other devices in the group have already been commissioned.

Remove all test leads and temporary shorting links, then replace any external wiring that has been removed to allow testing.

If any external wiring has been disconnected for the commissioning process, replace it in accordance with the relevant external connection or scheme diagram

Confirm current transformer wiring:

1. Measure the current transformer secondary values for each input either by:
   a. reading from the device's HMI panel (providing it has first been verified by a secondary injection test)
   b. using a current clamp meter
2. Check that the current transformer polarities are correct by measuring the phase angle between the current and voltage, either against a phase meter already installed on site and known to be correct or by determining the direction of power flow by contacting the system control centre.
3. Ensure the current flowing in the neutral circuit of the current transformers is negligible.
4. Compare the values of the secondary phase voltages with the measured voltage magnitude values, which can be found in the **MEASUREMENTS 1** menu column.

Note: Under normal load conditions the earth fault function will measure little, if any, current. It is therefore necessary to simulate a phase to neutral fault. This can be achieved by temporarily disconnecting one or two of the line current transformer connections to the relay and shorting the terminals of these current transformer secondary windings.

If the **Local Values** cell is set to **Secondary**, the currents displayed should be equal to the applied secondary current. The values should be within 5% of the applied secondary currents. However, an additional allowance must be made for the accuracy of the test equipment being used.

If the **Local Values** cell is set to **Primary**, the currents displayed on the relay should be equal to the applied secondary current multiplied by the corresponding current transformer ratio set in **CT & VT RATIOS** menu column. The values should be within 5% of the expected value, plus an additional allowance for the accuracy of the test equipment being used.

Note: If a single dedicated current transformer is used for the earth fault function, it is not possible to check the relay's measured values.

12.1 On-Load Directional Test

This test ensures that directional overcurrent and fault locator functions have the correct forward/reverse response to fault and load conditions. For this test you must first know the actual direction of power flow on the system. If you do not already know this, you must determine it using adjacent instrumentation or protection already in-service.

- For load current flowing in the Forward direction (power export to the remote line end), the **A Phase Watts** cell in the **MEASUREMENTS 2** column should show positive power signing.
- For load current flowing in the Reverse direction (power import from the remote line end), the **A Phase Watts** cell in the **MEASUREMENTS 2** column should show negative power signing.

Note: This check applies only for Measurement Modes 0 (default), and 2. This should be checked in the **MEASURE'T SETUP** column (**Measurement Mode** = 0 or 2). If measurement modes 1 or 3 are used, the expected power flow signing would be opposite to that shown above.

In the event of any uncertainty, check the phase angle of the phase currents with respect to their phase voltage.

13. FINAL CHECKS

1. Remove all test leads and temporary shorting leads.
2. If you have had to disconnect any of the external wiring to perform the wiring verification tests, replace all wiring, fuses and links in accordance with the relevant external connection or scheme diagram.
3. The settings applied should be carefully checked against the required application-specific settings to ensure that they are correct and have not been mistakenly altered during testing.
4. Ensure that all protection elements required have been set to **Enabled** in the **CONFIGURATION** column.
5. Ensure that the IED has been restored to service by checking that the **Test Mode** cell in the **COMMISSION TESTS** column is set to **Disabled**.
6. If the IED is in a new installation or the circuit breaker has just been maintained, the circuit breaker maintenance and current counters should be zero. These counters can be reset using the **Reset All Values** cell. If the required access level is not active, the device will prompt a password to be entered so that the setting change can be made.
7. If the menu language has been changed to allow accurate testing it should be restored to the customer's preferred language.
8. If a P991/MMLG test block is installed, remove the P992/MMLB test plug and replace the cover so that the protection is put into service.
9. Ensure that all event records, fault records, disturbance records, alarms and LEDs and communications statistics have been reset.

Note: Remember to restore the language setting to the customer's preferred language on completion.

MAINTENANCE

CONTENTS

1.	**MAINTENANCE**	**3**
1.1	**Maintenance Checks**	**3**
1.1.1	Alarms	3
1.1.2	Opto-isolators	3
1.1.3	Output Relays	3
1.1.4	Measurement Accuracy	3
1.2	**Replacing the Device**	**4**
1.3	**Repairing the Device**	**5**
1.4	**Removing the Front Panel**	**5**
1.5	**Replacing a PCB**	**6**
1.5.1	Replacing the Main Processor Board	6
1.5.2	Replacement of Communications Boards	7
1.5.3	Replacement of the Input Module	8
1.5.4	Replacement of the Power Supply Board	8
1.5.5	Replacement of the I/O Boards	9
1.6	**Recalibration**	**9**
1.7	**Supercapacitor Discharged**	**9**
1.8	**Cleaning**	**10**

1. MAINTENANCE

1.1 Maintenance Checks

In view of the critical nature of the application, GE Vernova products should be checked at regular intervals to confirm they are operating correctly. GE Vernova products are designed for a life in excess of 20 years.

The devices are self-supervising and so require less maintenance than earlier designs of protection devices. Most problems will result in an alarm, indicating that remedial action should be taken. However, some periodic tests should be carried out to ensure that they are functioning correctly and that the external wiring is intact. It is the responsibility of the customer to define the interval between maintenance periods. If your organization has a Preventative Maintenance Policy, the recommended product checks should be included in the regular program.

Maintenance periods depend on many factors, such as:

- The operating environment
- The accessibility of the site
- The amount of available manpower
- The importance of the installation in the power system
- The consequences of failure

Although some functionality checks can be performed from a remote location, these are predominantly restricted to checking that the unit is measuring the applied currents and voltages accurately and checking the circuit breaker maintenance counters. For this reason, maintenance checks should also be performed locally at the substation.

Before carrying out any work on the equipment the user should be familiar with the contents of the Safety Section/Safety Guide Pxxx-SG-4LM-3 or later issue and the ratings on the equipment's rating label.

1.1.1 Alarms

First check the alarm status LED to see if any alarm conditions exist. If so, press the Read key repeatedly to step through the alarms.

After dealing with any problems, clear the alarms. This will clear the relevant LEDs.

1.1.2 Opto-isolators

Check the opto-inputs by repeating the commissioning test detailed in the Commissioning chapter.

1.1.3 Output Relays

Check the output relays by repeating the commissioning test detailed in the Commissioning chapter.

1.1.4 Measurement Accuracy

If the power system is energized, the measured values can be compared with known system values to check that they are in the expected range. If they are within a set range, this indicates that the A/D conversion and the calculations are being performed correctly. Suitable test methods can be found in the Commissioning chapter.

Alternatively, the measured values can be checked against known values injected into the device using the test block, (if fitted) or injected directly into the device's terminals. Suitable test methods can be found in the Commissioning chapter. These tests will prove the calibration accuracy is being maintained.

1.2 Replacing the Device

If your product should develop a fault while in service, depending on the nature of the fault, the watchdog contacts will change state, and an alarm condition will be flagged. In the event of a fault, you can replace either the complete device or just the faulty PCB, identified by the in-built diagnostic software.

If possible, you should replace the complete device, as this reduces the chance of damage due to electrostatic discharge and eliminates the risk of fitting an incompatible replacement PCB. However, we understand it may be difficult to remove an installed product, and you may be forced to replace the faulty PCB on-site. The case and rear terminal blocks are designed to allow removal of the complete device, without disconnecting the scheme wiring.

Replacing PCBs requires the correct on-site environment (clean and dry) as well as suitably trained personnel.

If the repair is not performed by an approved service centre, the warranty will be invalidated.

Before carrying out any work on the equipment, you should be familiar with the contents of the Safety Information section of this guide or the Safety Guide SFTY/4LM, as well as the ratings on the equipment's rating label. This should ensure that no damage is caused by incorrect handling of the electronic components.

Before working at the rear of the relay, isolate all voltage and current supplies to the relay.

Note: The current transformer inputs are equipped with integral shorting switches which will close for safety reasons, when the terminal block is removed.

To replace the complete device:

1. Carefully disconnect the cables not connected to the terminal blocks (e.g. IRIG-B, fibre optic cables, earth), as appropriate, from the rear of the device.
2. Remove the terminal block screws using a magnetic screwdriver to minimize the risk of losing the screws or leaving them in the terminal block.
3. Without exerting excessive force or damaging the scheme wiring, pull the terminal blocks away from their internal connectors.
4. Remove the terminal block screws that fasten the device to the panel and rack. These are the screws with the larger diameter heads that are accessible when the access covers are fitted and open.
5. Withdraw the device from the panel and rack. Take care, as the device will be heavy due to the internal transformers.
6. To reinstall the device, follow the above instructions in reverse, ensuring that each terminal block is relocated in the correct position and the chassis ground, IRIG-B and fibre optic connections are replaced. The terminal blocks are labelled alphabetically with 'A' on the left-hand side when viewed from the rear.

Once the device has been reinstalled, it should be re-commissioned as set out in the Commissioning chapter.

If the top and bottom access covers have been removed, do not remove the screws with the smaller diameter heads which are accessible. These screws hold the front panel on the relay.

Note: There are three types of terminal block used on the relay, RTD/CLIO input, heavy duty and medium duty. The terminal blocks are fastened to the rear panel using slotted screws on RTD/CLIO input blocks and crosshead on the heavy and medium duty blocks

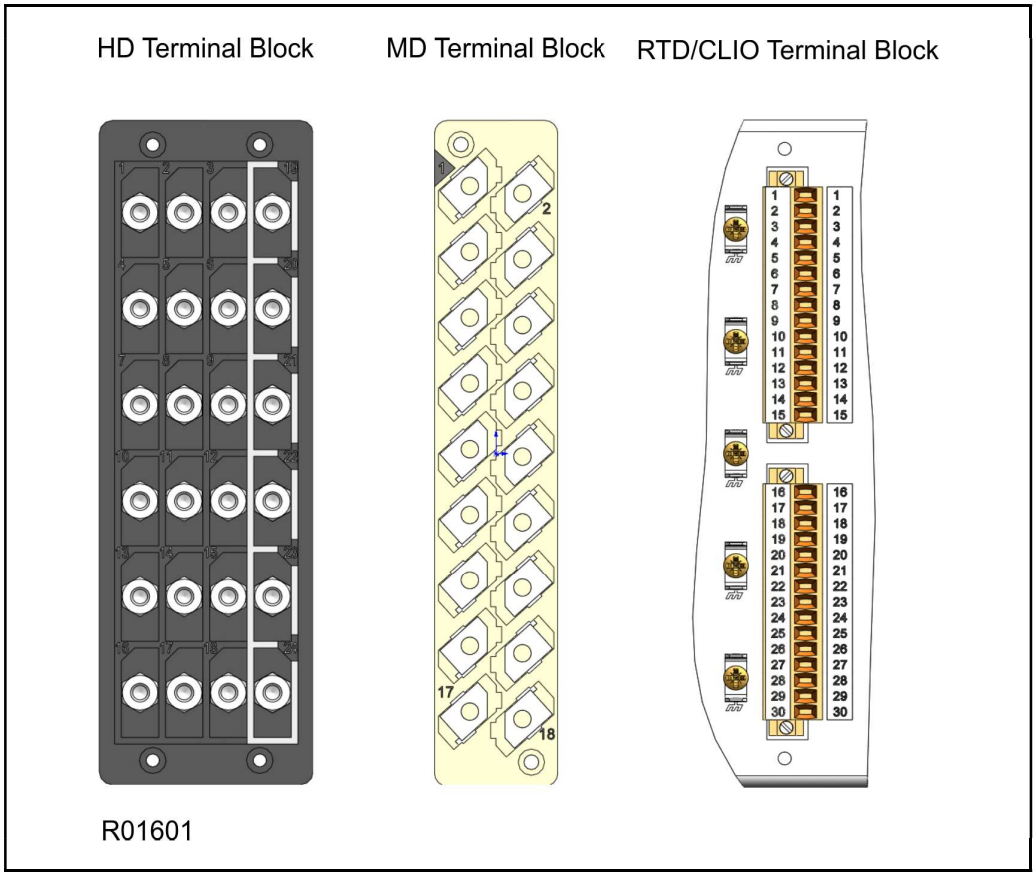

Figure 1: Terminal Block Types

1.3 Repairing the Device

If your product should develop a fault while in service, depending on the nature of the fault, the watchdog contacts will change state, and an alarm condition will be flagged. In the case of a fault, either the complete unit or just the faulty PCB, identified by the in-built diagnostic software, should be replaced.

Replacement of printed circuit boards and other internal components must be undertaken by approved Service Centres. Failure to obtain the authorization of after-sales engineers prior to commencing work may invalidate the product warranty.

We recommend that you entrust any repairs to Automation Support teams, which are available world-wide.

1.4 Removing the Front Panel

Before removing the front panel to replace a PCB, you must first remove the auxiliary power supply and wait 5 seconds for the internal capacitors to discharge. You should also isolate voltage and current transformer connections and trip circuit.

Before removing the front panel, you should be familiar with the contents of the Safety section or the Safety Guide SFTY/4LM, as well as the ratings on the equipment's rating label. This should ensure that no damage is caused by incorrect handling of the electronic components.

To remove the front panel:

1. Open the top and bottom access covers. You must open the hinged access covers by more than 90° before they can be removed.

If fitted, remove the transparent secondary front cover.

Apply outward pressure to the middle of the access covers to bow them and disengage the hinge lug, so the access cover can be removed. The screws that fasten the front panel to the case are now accessible.

Undo and remove the screws. The 40TE case has four crosshead screws fastening the front panel to the case, one in each corner, in recessed holes. The 60TE/80TE cases have an additional two screws, one midway along each of the top and bottom edges of the front plate.

When the screws have been removed, pull the complete front panel forward to separate it from the metal case. The front panel is connected to the rest of the circuitry by a 64-way ribbon cable.

The ribbon cable is fastened to the front panel using an IDC connector, a socket on the cable and a plug with locking latches on the front panel. Gently push the two locking latches outwards which eject the connector socket slightly. Remove the socket from the plug to disconnect the front panel.

Do not remove the screws with the larger diameter heads which are accessible when the access covers are fitted and open. These screws hold the relay in its mounting (panel or cubicle).

The internal circuitry is now exposed and is not protected against electrostatic discharge and dust ingress. Therefore ESD precautions and clean working conditions must be maintained at all times.

1.5 Replacing a PCB

Replacing printed circuit boards and other internal components of protective relays must be undertaken only by Service Centers approved by GE Vernova. Failure to obtain the authorization of GE Vernova After Sales Engineers prior to commencing work may invalidate the product warranty.

GE Vernova support teams are available world-wide, and it is recommended that any repairs be entrusted to these trained personnel.

If the relay fails to operate correctly refer to document ‘Problem Analysis’, to help determine which PCB has become faulty.

1. To replace any of the PCBs, first remove the front panel.
2. Once the front panel has been removed, the PCBs are accessible. The numbers above the case outline identify the guide slot reference for each printed circuit board. Each printed circuit board has a label stating the corresponding guide slot number to ensure correct relocation after removal. To serve as a reminder of the slot numbering there is a label on the rear of the front panel metallic screen.
3. Remove the 64-way ribbon cable from the PCB that needs replacing
4. Remove the PCB in accordance with the board-specific instructions detailed later in this section.

   Note: To ensure compatibility, always replace a faulty PCB with one of an identical part number.

1.5.1 Replacing the Main Processor Board

The main processor board is situated in the front panel. This board contains application-specific settings in its nonvolatile memory. You may wish to take a backup copy of these settings. This could save time in the recommissioning process.

To replace the main processor board:

1. Remove front panel.
2. Place the front panel with the user interface face down and remove the six screws from the metallic screen, as shown in the figure below. Remove the metal plate.
3. Remove the screws that hold the main processor board in position.
4. Carefully disconnect the ribbon cable. Take care as this could easily be damaged by excessive twisting.
5. Replace the main processor board
6. Reassemble the front panel using the reverse procedure. Make sure the ribbon cable is reconnected to the main processor board and that all eight screws are refitted.
7. Refit the front panel.
8. Refit and close the access covers then press the hinge assistance T-pieces so they click back into the front panel moulding.
9. Once the unit has been reassembled, carry out the standard commissioning procedure as defined in the Commissioning chapter.

Note: After replacing the main processor board, all the settings required for the application need to be re-entered. This may be done either manually or by downloading a settings file.

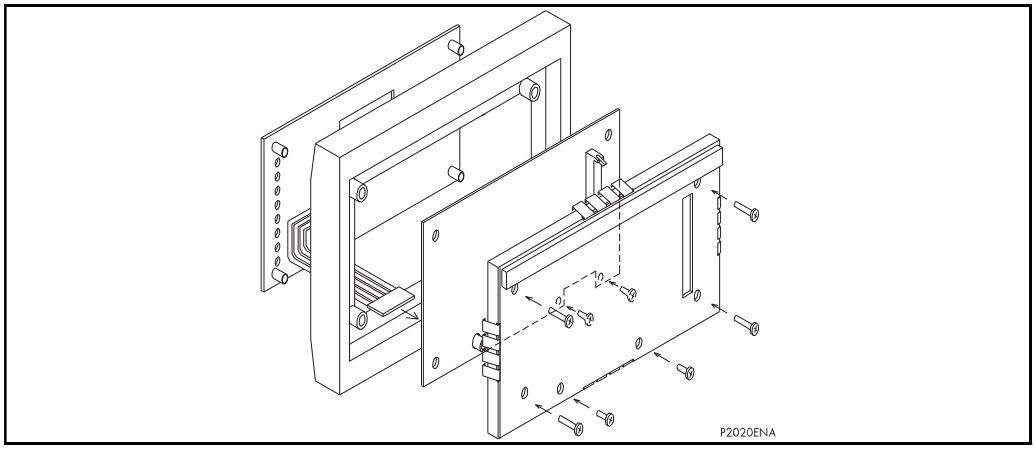

Figure 2: Front Panel Assembly

1.5.2 Replacement of Communications Boards

Most products will have at least one communications board of some sort fitted. There are several different boards available offering various functionality, depending on the application. Some products may even be fitted with two boards of different types.

To replace a faulty communications board:

1. Remove front panel.
2. Disconnect all connections at the rear.
3. The board is secured in the relay case by two screws, one at the top and another at the bottom. Remove these screws carefully as they are not captive in the rear panel.
4. Gently pull the communications board forward and out of the case.
5. Before fitting the replacement PCB check that the number on the round label next to the front edge of the PCB matches the slot number into which it will be fitted. If the slot number is missing or incorrect, write the correct slot number on the label.
6. Fit the replacement PCB carefully into the correct slot. Make sure it is pushed fully back and that the securing screws are refitted.

7. Reconnect all connections at the rear.
8. Refit the front panel.
9. Refit and close the access covers then press the hinge assistance T-pieces so they click back into the front panel moulding.
10. Once the unit has been reassembled, commission it according to the Commissioning chapter.

1.5.3 Replacement of the Input Module

The input module comprises of two boards fastened together and is contained within a metal housing.

1. Remove front panel.
2. The module is secured in the case by two screws on its right-hand side, accessible from the front. Move these screws carefully as they are not captive in the front plate of the module.
3. On the right-hand side of the module there is a small metal tab which brings out a handle (on some modules there is also a tab on the left). Grasp the handle(s) and pull the module firmly forward, away from the rear terminal blocks. A reasonable amount of force is needed due to the friction between the contacts of the terminal blocks.
4. Remove the module from the case. The module may be heavy, because it contains the input voltage and current transformers.
5. Slot in the replacement module and push it fully back onto the rear terminal blocks. To check that the module is fully inserted, make sure the v-shaped cut-out in the bottom plate of the case is fully visible.
6. Refit the securing screws.
7. Refit the front panel.
8. Refit and close the access covers then press the hinge assistance T-pieces so they click back into the front panel moulding.
9. Once the unit has been reassembled, commission it according to the Commissioning chapter.

With non-mounted IEDs, the case needs to be held firmly while the module is withdrawn. Withdraw the input module with care as it suddenly comes loose once the friction of the terminal blocks is overcome.

Note: If individual boards within the input module are replaced, recalibration will be necessary. We therefore recommend replacement of the complete module to avoid on-site recalibration.

1.5.4 Replacement of the Power Supply Board

Before removing the front panel, you should be familiar with the contents of the Safety section or the Safety Guide SFTY/4LM, as well as the ratings on the equipment's rating label. This should ensure that no damage is caused by incorrect handling of the electronic components.

The power supply board is fastened to an output relay board with push fit nylon pillars. This doubled-up board is secured on the extreme left-hand side, looking from the front of the unit.

1. Remove front panel.
2. Pull the power supply module forward, away from the rear terminal blocks and out of the case. A reasonable amount of force is needed due to the friction between the contacts of the terminal blocks.
3. Separate the boards by pulling them apart carefully. The power supply board is the one with two large electrolytic capacitors.

4. Before reassembling the module, check that the number on the round label next to the front edge of the PCB matches the slot number into which it will be fitted. If the slot number is missing or incorrect, write the correct slot number on the label.
5. Reassemble the module with a replacement PCB. Push the inter-board connectors firmly together. Fit the four push fit nylon pillars securely in their respective holes in each PCB.
6. Slot the power supply module back into the housing. Push it fully back onto the rear terminal blocks.
7. Refit the front panel.
8. Refit and close the access covers then press the hinge assistance T-pieces so they click back into the front panel moulding.
9. Once the unit has been reassembled, commission it according to the Commissioning chapter.

1.5.5 Replacement of the I/O Boards

There are several different types of I/O boards, which can be used, depending on the product and application.

Some boards have opto-inputs, some have relay outputs and others have a mixture of both.

1. Remove front panel.
2. Gently pull the board forward and out of the case.
3. If replacing the I/O board, make sure the setting of the link above IDC connector on the replacement board is the same as the one being replaced.
4. Before fitting the replacement board check the number on the round label next to the front edge of the board matches the slot number into which it will be fitted. If the slot number is missing or incorrect, write the correct slot number on the label.
5. Carefully slide the replacement board into the appropriate slot, ensuring that it is pushed fully back onto the rear terminal blocks.
6. Refit the front panel.
7. Refit and close the access covers then press at the hinge assistance T-pieces so they click back into the front panel moulding.
8. Once the unit has been reassembled, commission it according to the Commissioning chapter.

1.6 Recalibration

Recalibration is not needed when a PCB is replaced, unless it is one of the boards in the input module. If any of the boards in the input module is replaced, the unit must be recalibrated.

Although recalibration is needed when a board inside the input module is replaced, it is not needed if the input module is replaced in its entirety.

Although it is possible to carry out recalibration on site, this requires special test equipment and software. We therefore recommend that the work be carried out by the manufacturer or entrusted to an approved service centre.

1.7 Supercapacitor Discharged

The supercapacitor maintains charge for two weeks with the IED de-energized. When first energising the IED after this time there may be a Battery Alarm due to the supercapacitor voltage dropping below a pre-defined threshold. The battery alarm will clear after approximately 30 minutes of the IED being energized, and once cleared there will be enough charge in the supercapacitor to backup status data.

Note: Events, disturbance and maintenance records will be lost if the supercapacitor is fully discharged.

1.8 Cleaning

Before cleaning the relay ensure that all ac and dc supplies, current transformer and voltage transformer connections are isolated to prevent any chance of an electric shock while cleaning.

Only clean the equipment with a lint-free cloth dampened with clean water. Do not use detergents, solvents or abrasive cleaners as they may damage the relay's surface and leave a conductive residue.

TROUBLESHOOTING

CONTENTS

1.	**INTRODUCTION**	**3**
2.	**TROUBLESHOOTING**	**4**
2.1	**Self-diagnostic Software**	**4**
2.2	**Power Up Errors**	**4**
2.3	**Error Message or Code on Power-up**	**4**
2.4	**Out of Service LED on at Power Up**	**5**
2.5	**Error Code During Operation**	**6**
2.6	**Mal-operation of the Relay during Testing**	**6**
2.6.1	Failure of Output Contacts	6
2.6.2	Failure of Opto Inputs	6
2.7	**Incorrect Analogue Signals (P742 or P743)**	**7**
2.8	**PSL Editor Troubleshooting**	**7**
2.8.1	Diagram Reconstruction	7
2.8.2	PSL Version Check	7
2.9	**Repair and Modification Procedure**	**7**

1. INTRODUCTION

Before carrying out any work on the equipment the user should be familiar with the contents of the Safety Section/Safety Guide Pxxx-SG-4LM-3 or later issue and the ratings on the equipment's rating label.

The troubleshooting chapter allows an error condition on the IED to be identified so that appropriate corrective action can be taken.

If the device develops a fault, it is usually possible to identify which module needs replacing. It is not possible to perform an on-site repair to a faulty module.

If you return a faulty unit or module to the manufacturer or one of their approved service centres, you should include a completed copy of the Repair or Modification Return Authorization (RMA) form.

2. TROUBLESHOOTING

2.1 Self-diagnostic Software

The device includes several self-monitoring functions to check the operation of its hardware and software while in service. If there is a problem with the hardware or software, it should be able to detect and report the problem and attempt to resolve the problem by performing a reboot. In this case, the device would be out of service for a short time, during which the 'Healthy' LED on the front of the device is switched OFF and the watchdog contact at the rear is ON. If the restart fails to resolve the problem, the unit takes itself permanently out of service; the 'Healthy' LED stays OFF and watchdog contact stays ON.

If a problem is detected by the self-monitoring functions, the device attempts to store a maintenance record to allow the nature of the problem to be communicated to the user.

The self-monitoring is implemented in two stages: firstly, a thorough diagnostic check which is performed on bootup, and secondly a continuous self-checking operation, which checks the operation of the critical functions whilst it is in service.

2.2 Power Up Errors

If the IED does not appear to power up, use the following table to determine whether the fault is in the external wiring, auxiliary fuse, relay power supply module or the relay front panel.

Test	Check	Action
1	Measure the auxiliary voltage on terminals 1 and 2. Verify the voltage level and polarity against rating the label on front. Terminal 1 is –dc, 2 is +dc	If the auxiliary voltage is correct, go to test 2. Otherwise check the wiring and fuses in the auxiliary supply.
2	Check the LEDs and LCD backlight switch ON at power-up. Also check the N/O watchdog contact for closing.	If the LEDs and LCD backlight switch ON or the contact closes and no error code is displayed, the error is probably on the main processor board in the front panel. If the LEDs and LCD backlight do not switch ON and the contact does not close, go to test 3.
3	Check Field voltage output (nominally 48 V DC)	If there is no field voltage, the fault is probably in the relay power supply module.

Table 1: Failure of Relay to Power Up

2.3 Error Message or Code on Power-up

The IED performs a self-test during power-up. If it detects an error, a message appears on the LCD, and the power-up sequence stops. If the error occurs when the IED application software is running, a maintenance record is created and the relay reboots.

Test	Check	Action
1	Is an error message or code permanently displayed during power up?	If relay locks up and displays an error code permanently, go to test 2. If the relay prompts for user input, go to test 4. If the relay reboots automatically, go to test 5
2	Record displayed error, then remove and re-apply relay auxiliary supply.	Record whether the same error code is displayed when the relay is rebooted. If no error code is displayed, contact the local service center stating the error code and relay information. If the same code is displayed, go to test 3.

Test	Check	Action
3	Error code Identification The following text messages (in English) are displayed if a fundamental problem is detected, preventing the system from booting: Bus Fail - address lines SRAM Fail - data lines FLASH Fail format error FLASH Fail checksum Code Verify Fail The following hex error codes relate to errors detected in specific relay modules:	These messages indicate that a problem has been detected on the relay's main processor board of in the front panel.
	0c140005/0c0d0000	Input Module (inc. Opto-isolated inputs)
	0c140006/0c0e0000	Output Relay Cards
	The last 4 digits provide details on the actual error.	Other error codes relate to problems within the main processor board hardware or software. Contact GE Vernova with details of the problem for a full analysis.
4	The relay displays a message for corrupt settings and prompts for default values to be restored for the affected settings.	The power-up tests have detected corrupted relay settings. Restore the default settings to allow the power-up to be complete, reapply the application-specific settings.
5	The relay resets when the power-up is complete. A record error code is displayed	Error 0x0E080000, programmable scheme logic error due to excessive execution time. If relay powers up successfully, check programmable logic for feedback paths. Other error codes will relate to software errors on the main processor board, contact GE Vernova.

Table 2: Power-up Self-test Error

2.4 Out of Service LED on at Power Up

Test	Check	Action	
1	Using the relay menu, confirm the Commission Test/Test Mode setting is Enabled. If it is not enabled, go to test 2.	If the setting is Enabled, disable the test mode and make sure the Out of Service LED is OFF.	
2	Select **View Records**, then view the last maintenance record from the menu.	Check for **H/W Verify Fail**. This indicates a discrepancy between the relay model number and the hardware. Examine the **Maint. Data**; this indicates the causes of the failure using bit fields: Bit Meaning	
		0	The application type field in the model number does not match the software ID
		1	The application field in the model number does not match the software ID
		2	The variant 1 field in the model number does not match the software ID
		3	The variant 2 field in the model number does not match the software ID
		4	The protocol field in the model number does not match the software ID
		5	The language field in the model number does not match the software ID
		6	The VT type field in the model number is incorrect (110 V VTs fitted)
		7	The VT type field in the model number is incorrect (440 V VTs fitted)
		8	The VT type field in the model number is incorrect (no VTs fitted)

Table 4: Out of Service LED Illuminated

2.5 Error Code During Operation

The relay performs continuous self-checking. If the relay detects an error, it displays an error message, logs a maintenance record and after a short delay resets itself. A permanent problem (for example due to a hardware fault) is usually detected in the power-up sequence, then the relay displays an error code and halts. If the problem is transient, the relay reboots correctly and continues operation. By examining the maintenance record logged, the nature of the detected fault can be determined.

2.6 Mal-operation of the Relay during Testing

2.6.1 Failure of Output Contacts

An apparent failure of the relay output contacts can be caused by the configuration. Perform the following tests to identify the real cause of the failure. The self-tests verify that the coil of the contact has been energized. An error is displayed if there is a fault in the output relay board.

Test	Check	Action
1	Is the Out of Service LED ON?	If this LED is ON, the relay may be in test mode, or the protection has been disabled due to a hardware verify error (see **Error! Reference source not found.**).
2	Examine the Contact status in the Commissioning section of the menu.	If the relevant bits of the contact status are operated, go to test 4; if not, go to test 3.
3	Examine the fault record or use the test port to check the protection element is operating correctly.	If the protection element does not operate, check the test is correctly applied. If the protection element operates, check the programmable logic, to make sure the protection element is correctly mapped to the contacts.
4	Using the Commissioning/Test mode function, apply a test pattern to the relevant relay output contacts. Consult the correct external connection diagram and use a continuity tester at the rear of the relay to check the relay output contacts operate.	If the output relay operates, the problem must be in the external wiring to the relay. If the output relay does not operate the output relay contacts may have failed (the self-tests, verify that the relay coil is being energized). Ensure the closed resistance is not too high for the continuity tester to detect.

Table 6: Failure of Output Contacts

2.6.2 Failure of Opto Inputs

The opto-isolated inputs are mapped onto the IED's internal DDB signals using the programmable scheme logic. If an input is not recognized by the scheme logic, use the **Opto I/P Status** cell in the **COMMISSION TESTS** column to check whether the problem is in the opto-input itself, or the mapping of its signal to the scheme logic functions.

If the device does not correctly read the opto-input state, test the applied signal. Verify the connections to the opto-input using the wiring diagram and the nominal voltage settings in the **OPTO CONFIG** column. To do this:

1. Select the nominal voltage for all opto-inputs by selecting one of the five standard ratings in the **Global Nominal V** cell.
2. Select **Custom** to set each opto-input individually to a nominal voltage.
3. Using a voltmeter, check that the voltage on its input terminals is greater than the minimum pick-up level (See the Technical Data chapter for opto pick-up levels).

If the signal is correctly applied, this indicates failure of an opto-input, which may be situated on standalone opto input board, or on an opto-input board that is part of the input module. Separate opto-input boards can simply be replaced. If, however, the faulty opto-input board is part of the input module, the complete input module should be replaced. This is because the analogue input module cannot be individually replaced without dismantling the module and recalibration of the IED.

2.7 Incorrect Analogue Signals (P742 or P743)

If the measured analogue quantities do not seem correct, use the measurement function to determine the type of problem. The measurements can be configured in primary or secondary terms.

1. Compare the displayed measured values with the actual magnitudes at the terminals.
2. Check the correct terminals are used.
3. Check the CT and VT ratios set are correct.
4. Check the phase displacement to confirm the inputs are correctly connected.

2.8 PSL Editor Troubleshooting

A failure to open a connection could be due to one or more of the following:

- The IED address is not valid (this address is always 1 for the front port)
- Password in not valid
- Communication Set-up (COM port, Baud rate, or Framing) is not correct
- Transaction values are not suitable for the relay or the type of connection
- Modem configuration is not valid. Changes may be necessary when using a modem
- The connection cable is not wired correctly or broken. See S1 Agile connection configurations
- The option switches on any KITZ101/102 this is in use may be incorrectly set

2.8.1 Diagram Reconstruction

Although a scheme can be extracted from an IED, a facility is provided to recover a scheme if the original file is unobtainable.

A recovered scheme is logically correct but much of the original graphical information is lost. Many signals are drawn in a vertical line down the left side of the canvas. Links are drawn orthogonally using the shortest path from A to B. Any annotation added to the original diagram such as titles and notes are lost.

Sometimes a gate type does not appear as expected. For example, a single-input AND gate in the original scheme appears as an OR gate when uploaded. Programmable gates with an inputs-to-trigger value of 1 also appear as OR gates.

2.8.2 PSL Version Check

The PSL is saved with a version reference, time stamp and CRC check. This gives a visual check whether the default PSL is in place or whether a new application has been downloaded.

2.9 Repair and Modification Procedure

Please follow these steps to return an Automation product to us:

1. Get the Repair and Modification Authorization Form (RMA)
   An electronic version of the RMA form is available from the following:

   GAsupport@gevernova.com

2. Fill in the RMA form
   Fill in only the white part of the form.
   Please ensure that all fields marked (M) are completed such as:

   - Equipment model
   - Model No. and Serial No.
   - Description of failure or modification required (please be specific)
   - Value for customs (in case the product requires export)

- Delivery and invoice addresses
- Contact details

3. Send the RMA form to your local contact

   For a list of local service contacts worldwide, email us at:
   GA support@gevernova.com

4. The local service contact will provide the shipping information

   Your local service contact provides you with all the information needed to ship the product:

   - Pricing details
   - RMA number
   - Repair centre address

   If required, acceptance of the quote must be delivered before going to the next stage.

5. Send the product to the repair centre

   - Address the shipment to the repair centre specified by your local contact
   - Make sure all items are packaged in an anti-static bag and foam protection
   - Make sure a copy of the import invoice is attached with the returned unit
   - Make sure a copy of the RMA form is attached with the returned unit
   - E-mail or fax a copy of the import invoice and airway bill document to your local contact

SCADA COMMUNICATIONS

CONTENTS

1.	**INTRODUCTION**	**5**
2.	**COMMUNICATION INTERFACES**	**6**
3.	**SERIAL COMMUNICATION**	**7**
3.1	**EIA(RS)232 Bus**	**7**
3.2	**EIA(RS)485 Bus**	**7**
3.2.1	EIA(RS)485 Biasing Requirements	8
3.3	**K-Bus**	**8**
4.	**ETHERNET COMMUNICATION**	**10**
5.	**REDUNDANT ETHERNET COMMUNICATION**	**11**
5.1	**Supported Protocols**	**11**
5.2	**Parallel Redundancy Protocol**	**11**
5.2.1	PRP Application in the Substation	13
5.3	**High-availability Seamless Redundancy (HSR)**	**13**
5.3.1	HSR Multicast Topology	13
5.3.2	HSR Unicast Topology	14
5.3.3	HSR Application in the Substation	15
5.4	**Rapid Spanning Tree Protocol**	**15**
5.5	**Configuring IP Addresses**	**16**
5.5.1	Configuring the IED IP Address	16
5.5.2	Configuring the REB IP Address	16
5.6	**Redundant Ethernet Configurator**	**16**
5.6.1	Starting the Configurator	17
5.6.2	PRP/HSR Device identification	17
5.6.3	Selecting the Device Mode	18
5.6.4	PRP/HSR IP Address Configuration	18
5.6.5	SNTP IP Address Configuration	18
5.6.6	Check for Connected Equipment	18
5.6.7	PRP Configuration	18
5.6.8	HSR Configuration	19
5.6.9	Filtering Database	19
5.6.10	End of Session	20
5.7	**RSTP Configurator**	**20**
5.7.1	Connecting the IED to a PC	20
5.7.2	Installing the Configurator	21
5.7.3	Starting the Configurator	21
5.7.4	RSTP Device Identification	21
5.7.5	RSTP IP Address Configuration	22

5.7.6 SNTP IP Address Configuration 22
5.7.7 Check for Connected Equipment 22
5.7.8 RSTP Configuration 22

6. SIMPLE NETWORK MANAGEMENT PROTOCOL (SNMP) 24
6.1 SNMP Management Information Bases 24
6.2 Main Processor MIBS Structure 24
6.3 Redundant Ethernet Board MIB Structure 25
6.4 Accessing the MIB 28
6.5 Main Processor SNMP Configuration 28

7. DATA PROTOCOLS 30
7.1 Courier 30
7.1.1 Physical Connection and Link Layer 30
7.1.2 Courier Database 31
7.1.3 Setting Categories 31
7.1.4 Setting Changes 31
7.1.5 Event Extraction 31
7.1.6 Disturbance Record Extraction 33
7.1.7 Programmable Scheme Logic Settings 33
7.1.8 Courier Configuration 34
7.2 IEC 60870-5 103 (not available) 35
7.3 DNP3.0 Communication (not available) 35
7.4 MODBUS Communication (not available) 35
7.5 IEC 61850 35
7.6 Benefits of IEC 61850 36
7.6.1 IEC 61850 Interoperability 36
7.6.2 The IEC 61850 Data Model 36
7.6.3 IEC 61850 in MiCOM Relays 37
7.6.4 IEC 61850 Data Model Implementation 37
7.6.5 IEC 61850 Communication Services Implementation 38
7.6.6 IEC 61850 Peer-to-Peer (GOOSE) Communications 38
7.6.7 Mapping GOOSE Messages to Virtual Inputs 38
7.6.8 Ethernet Functionality 38
7.6.9 IEC 61850 Configuration 39

8. READ ONLY MODE 44
8.1 IEC 60870-5-103 Protocol Blocking 44
8.2 Courier Protocol Blocking 44
8.3 IEC 61850 Protocol Blocking 45
8.4 Read-Only Settings 45
8.5 Read-Only DDB Signals 45

9. TIME SYNCHRONIZATION 46
9.1 Demodulated IRIG-B 46

9.1.1 IRIG-B Implementation 47

9.2 SNTP 47

9.2.1 Loss of SNTP Server Signal Alarm 47

9.3 IEEE 1588 Precision Time Protocol 47

9.3.1 Accuracy and Delay Calculation 47

9.3.2 PTP Domains 48

9.4 Time Synchronization using the Communication Protocols 48

FIGURES

Figure 1: RS485 Biasing Circuit 8

Figure 2: Remote Communication using K-Bus 9

Figure 3: IED attached to Separate LANs 12

Figure 4: PRP Application in the Substation 13

Figure 5: HSR Multicast Topology 14

Figure 6: HSR Unicast Topology 14

Figure 7: HSR Application in the Substation 15

Figure 8 IED attached to Redundant Ethernet Star or Ring Circuit 15

Figure 14: IED and REB IP Address Configuration 16

Figure 15: Connection using (a) an Ethernet switch and (b) a media converter 17

Figure 16: Connection using (a) an Ethernet switch and (b) a media converter 21

Figure 16: Data Model Layers in IEC 61850 36

Figure 17: Edition 2 System - Backward Compatibility 41

Figure 18: Edition 1 System - Forward Compatibility Issues 41

Figure 19: Example of Standby IED 42

Figure 20: Standby IED Activation Process 43

Figure 21: GPS Satellite Timing Signal 46

Figure 22: Timing Error using Ring or Line Topology 48

1. INTRODUCTION

This product supports Substation Automation System (SAS), and Supervisory Control and Data Acquisition (SCADA) communication. The support embraces the evolution of communications technologies that have taken place since microprocessor technologies were introduced into protection, control, and monitoring devices which are now ubiquitously known as Intelligent Electronic Devices for the substation (IEDs).

As standard, all products support rugged serial communications for SCADA and SAS applications. By option, any product can support Ethernet communications for more advanced SCADA and SAS applications.

2. COMMUNICATION INTERFACES

The products have a number of standard and optional communication interfaces. The standard and optional hardware and protocols are summarized below:

Port	Availability	Physical Layer	Use	Data Protocols
Front	Standard	RS232	Local settings	Courier
Rear Port 1 (RP1 copper)	Standard	RS232/ RS485/ K-Bus	SCADA Remote settings	Courier, IEC 60870-5-103,
Rear Port 1 (RP1 fibre)	Optional	Fibre	SCADA Remote settings	Courier, IEC 60870-5-103,
Rear Port 2 (RP2)	Optional	RS232/ RS485/ K-Bus	SCADA Remote settings	SK4: Courier only SK5: InterMicom only
Ethernet	Optional	Ethernet	IEC 61850	IEC 61850, Courier (tunnelled)

Note: Optional communications boards are always fitted into slot A.

It is only possible to fit one optional communications board, therefore RP2 and Ethernet communications are mutually exclusive.

3. SERIAL COMMUNICATION

The physical layer standards that are used for serial communications for SCADA purposes are:

- EIA(RS)485 (often abbreviated to RS485)
- K-Bus (a proprietary customization of RS485)

EIA(RS)232 is used for local communication with the IED (for transferring settings and downloading firmware updates).

RS485 is similar to RS232 but for longer distances and it allows daisy-chaining and multi-dropping of IEDs.

K-Bus is a proprietary protocol quite similar to RS485, but it cannot be mixed on the same link as RS485. Unlike RS485, K-Bus signals applied across two terminals are not polarized.

It is important to note that these are not data protocols. They only describe the physical characteristics required for two devices to communicate with each other.

For a description of the K-Bus standard see ***K-Bus***, GE Vernova's K-Bus Interface Guide reference R6509.

A full description of the RS485 is available in the published standard.

3.1 EIA(RS)232 Bus

The EIA(RS)232 interface uses the IEC 60870-5 FT1.2 frame format.

The device supports an IEC 60870-5 FT1.2 connection on the front-port. This is intended for temporary local connection and is not suitable for permanent connections. This interface uses a fixed baud rate of 19200 bps, 11-bit frame (8 data bits, 1 start bit, 1 stop bit, even parity bit), and a fixed device address of '1'.

EIA(RS)232 interfaces are polarized.

3.2 EIA(RS)485 Bus

The RS485 two-wire connection provides a half-duplex, fully isolated serial connection to the IED. The connection is polarized but there is no agreed definition of which terminal is which. If the master is unable to communicate with the product, and the communication parameters match, then it is possible that the two-wire connection is reversed.

The RS485 bus must be terminated at each end with 120 Ω 0.5 W terminating resistors between the signal wires.

The RS485 standard requires that each device be directly connected to the actual bus. Stubs and tees are forbidden. Loop bus and Star topologies are not part of the RS485 standard and are also forbidden.

Two-core screened twisted pair cable should be used. The final cable specification is dependent on the application, although a multi-strand 0.5 mm2 per core is normally adequate. The total cable length must not exceed 1000 m. It is important to avoid circulating currents, which can cause noise and interference, especially when the cable runs between buildings. For this reason, the screen should be continuous and connected to ground at one end only, normally at the master connection point.

The RS485 signal is a differential signal and there is no signal ground connection. If a signal ground connection is present in the bus cable, it must be ignored. At no stage should this be connected to the cable's screen or to the product's chassis. This is for both safety and noise reasons.

It may be necessary to bias the signal wires to prevent jabber. Jabber occurs when the signal level has an indeterminate state because the bus is not being actively driven. This can occur when all the slaves are in receive mode and the master is slow to turn from receive mode to transmit mode. This may be because the master is waiting in receive mode, in a high impedance state, until it has something to transmit. Jabber causes the receiving device(s) to miss the first bits of the first character in the packet, which results in the slave

rejecting the message and consequently not responding. Symptoms of this are: poor response times (due to retries), increasing message error counts, erratic communications, and in the worst case, complete failure to communicate.

3.2.1 EIA(RS)485 Biasing Requirements

Biasing requires that the signal lines be weakly pulled to a defined voltage level of about 1 V. There should only be one bias point on the bus, which is best situated at the master connection point. The DC source used for the bias must be clean to prevent noise being injected.

Note: Some devices may be able to provide the bus bias, in which case external components would not be required.

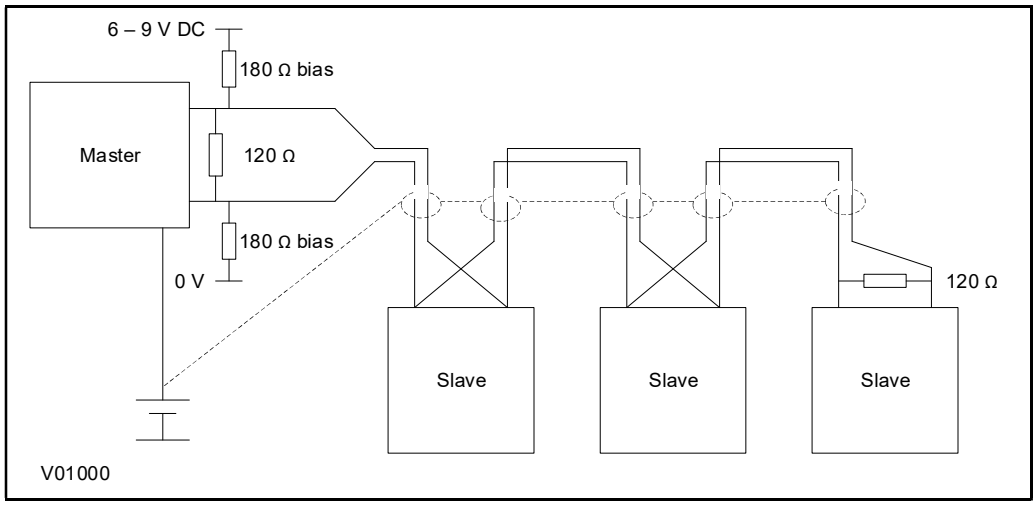

Figure 1: RS485 Biasing Circuit

It is extremely important that the 120 Ω termination resistors are fitted. Otherwise the bias voltage may be excessive and may damage the devices connected to the bus.

As the field voltage is much higher than that required, GE cannot assume responsibility for any damage that may occur to a device connected to the network as a result of incorrect application of this voltage.

Make sure the field voltage is not being used for other purposes (i.e. powering logic inputs) as this may cause noise to be passed to the communication network.

3.3 K-Bus

K-Bus is a robust signalling method based on RS485 voltage levels. K-Bus incorporates message framing, based on a 64-kbps synchronous HDLC protocol with FM0 modulation to increase speed and security.

The rear interface is used to provide a permanent connection for K-Bus, which allows multi-drop connection.

A K-Bus spur consists of up to 32 IEDs connected together in a multi-drop arrangement using twisted pair wiring. The K-Bus twisted pair connection is non-polarized.

It is not possible to use a standard EIA(RS)232 to EIA(RS)485 converter to convert IEC 60870-5 FT1.2 frames to K-Bus. A protocol converter, namely the KITZ101, KITZ102 or KITZ201, must be used for this purpose. Please consult GE Vernova for information regarding the specification and supply of KITZ devices. The following figure demonstrates a typical K-Bus connection.

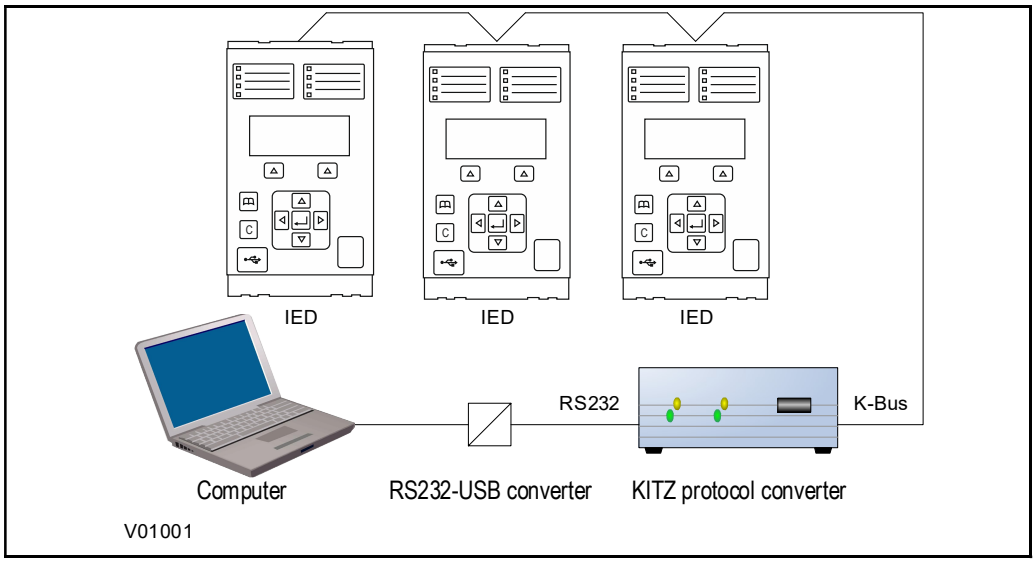

Figure 2: Remote Communication using K-Bus

Note: An RS232-USB converter is only needed if the local computer does not provide an RS232 port.

Further information about K-Bus is available in the publication R6509: K-Bus Interface Guide, which is available on request.

4. ETHERNET COMMUNICATION

The type of Ethernet board depends on the chosen model. The available boards and their features are described in the Firmware Design chapter of this manual.

The Ethernet interface is required for IEC 61850, and the Ethernet interface also offers communication with the S1 Agile settings application software for remote configuration and record extraction.

Fibre optic connection is recommended for use in permanent connections in a substation environment, as it offers advantages in terms of noise rejection. The fibre optic ports provide 100 Mbps communication and use either ST or LC connectors, depending on the board chosen. Fibres should be suitable for 1300 nm transmission and be multimode 50/125 µm or 62.5/125 µm.

Some Ethernet boards provide “copper” 100Base-TX ports using an RJ45 connector.

5. REDUNDANT ETHERNET COMMUNICATION

Redundancy is required where a single point of failure cannot be tolerated. It is required in critical applications such as substation automation. Redundancy acts as an insurance policy, providing an alternative route if one route fails.

Ethernet communication redundancy is available for most GE Vernova products, using a Redundant Ethernet Board (REB). The REB is a Network Interface Card (NIC), which incorporates an integrated Ethernet switch. The board provides two Ethernet transmitter/receiver pairs.

By ordering option, a number of different protocols are available to provide the redundancy according to particular system requirements.

In addition to the two Ethernet transmitter/receiver pairs, the REB provides link activity indication in the form of LEDs, link fail indication in the form of watchdog contacts, and a dedicated time synchronization input.

The dedicated time synchronization input is designed to connect to an IRIG-B signal. Both modulated and un-modulated IRIG-B formats are supported according to the selected option. Simple Network Time Protocol (SNTP) is supported over the Ethernet communications.

5.1 Supported Protocols

A range of Redundant Ethernet Boards are available to support different protocols for different requirements. One of the key requirements of substation redundant communications is "bumpless" redundancy. This means the ability to transfer from one communication path to another without noticeable consequences. Standard protocols of the time could not meet the demanding requirements of network availability for substation automation solutions. Switch-over times were unacceptably long. For this reason, companies developed proprietary protocols. More recently, however, standard protocols, which support bumpless redundancy (namely PRP and HSR) have been developed and ratified.

As well as supporting standard non-bumpless protocols such as RSTP, the REB was originally designed to support bumpless redundancy, using proprietary protocols (SHP, DHP) before the standard protocols became available. Since then, variants have been produced for the newer standard protocols.

REB variants for each of the following protocols are available:

- PRP (Parallel Redundancy Protocol)
- HSR (High-availability Seamless Redundancy)
- RSTP (Rapid Spanning Tree Protocol)
- Failover

PRP and HSR are open standards, so their implementation is compatible with any standard PRP or HSR device respectively. PRP provides "bumpless" redundancy. RSTP is also an open standard, so its implementation is compatible with any standard RSTP devices. RSTP provides redundancy, however, it is not "bumpless".

Note: The protocol you require must be selected at the time of ordering.

5.2 Parallel Redundancy Protocol

PRP (Parallel Redundancy Protocol) is defined in IEC 62439-3. PRP provides bumpless redundancy and meets the most demanding needs of substation automation. The PRP implementation of the REB is compatible with any standard PRP device.

PRP uses two independent Ethernet networks operating in parallel. PRP systems are designed so that there should be no common point of failure between the two networks, so the networks have independent power sources and are not connected together directly.

Devices designed for PRP applications have two ports attached to two separate networks and are called Doubly Attached Nodes (DAN). A DAN has two ports, one MAC address and one IP address.

The sending node replicates each frame and transmits them over both networks. The receiving node processes the frame that arrives first and discards the duplicate. Therefore, there is no distinction between the working and backup path. The receiving node checks that all frames arrive in sequence and that frames are correctly received on both ports.

Devices such as printers that have a single Ethernet port can be connected to either of the networks but will not directly benefit from the PRP principles. Such devices are called Singly Attached Nodes (SAN). For devices with a single Ethernet port that need to connect to both LANs, this can be achieved by employing Ethernet Redundancy Boxes (sometimes abbreviated to RedBox). Devices with a single Ethernet port that connect to both LANs by means of a RedBox are known as Virtual DAN (VDAN).

The figure below summarizes DAN, SAN, VDAN, LAN, and RedBox connectivity.

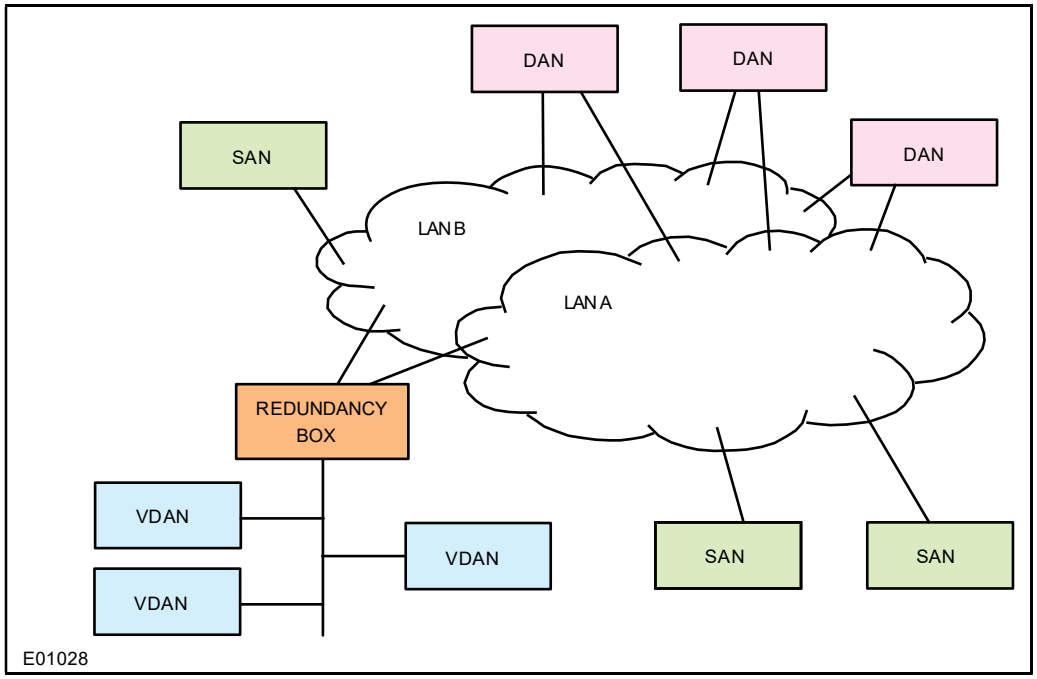

Figure 3: IED attached to Separate LANs

In a DAN, both ports share the same MAC address, so it does not affect the way devices talk to each other in an Ethernet network (Address Resolution Protocol at layer 2). Every data frame is seen by both ports.

When a DAN sends a frame of data, the frame is duplicated on both ports and therefore on both LAN segments. This provides a redundant path for the data frame if one of the segments fails. Under normal conditions, both LAN segments are working, and each port receives identical frames.

5.2.1 PRP Application in the Substation

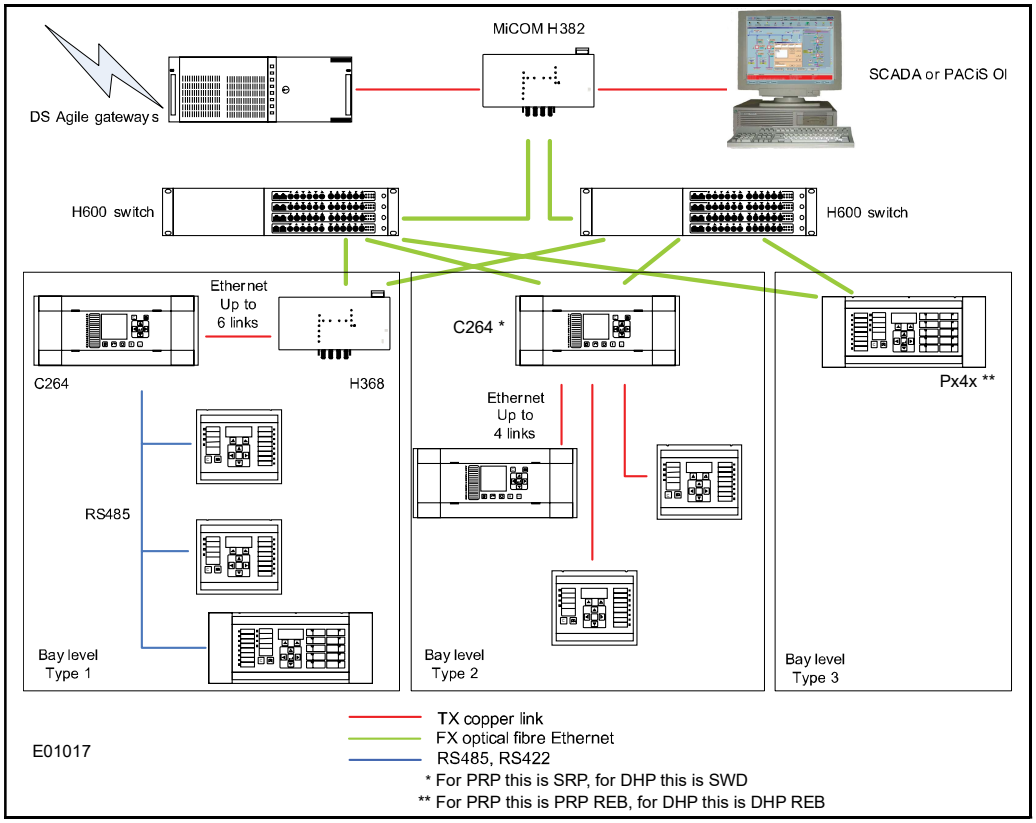

Figure 4: PRP Application in the Substation

5.3 High-availability Seamless Redundancy (HSR)

HSR is standardized in IEC 62439-3 (clause 5) for use in ring topology networks. Similar to PRP, HSR provides bumpless redundancy and meets the most demanding needs of substation automation. HSR has become the reference standard for ring-topology networks in the substation environment. The HSR implementation of the redundancy Ethernet board (REB) is compatible with any standard HSR device.

HSR works on the premise that each device connected in the ring is a doubly attached node running HSR (referred to as DANH). Similar to PRP, singly attached nodes such as printers are connected via Ethernet Redundancy Boxes (RedBox).

5.3.1 HSR Multicast Topology

When a DANH is sending a multicast frame, the frame (C frame) is duplicated (A frame and B frame), and each duplicate frame A/B is tagged with the destination MAC address and the sequence number. The frames A and B differ only in their sequence number, which is used to identify one frame from the other. Each frame is sent to the network via a separate port. The destination DANH receives two identical frames, removes the HSR tag of the first frame received and passes this (frame D) on for processing. The other duplicate frame is discarded. The nodes forward frames from one port to the other unless it was the node that injected it into the ring.

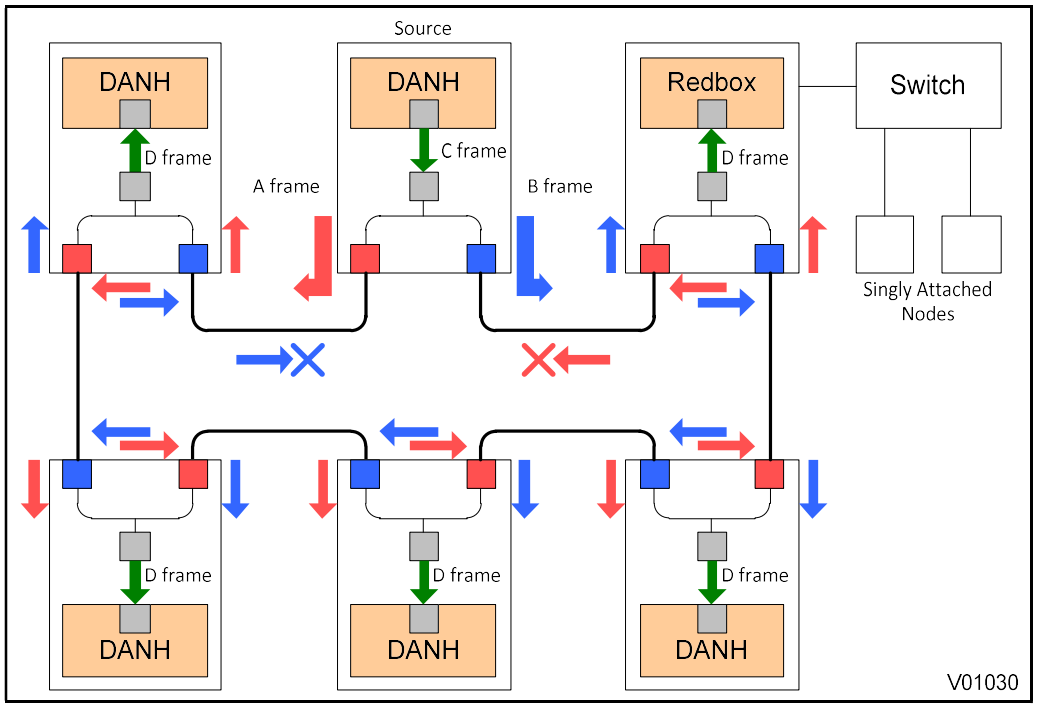

Figure 5: HSR Multicast Topology

Only about half of the network bandwidth is available in HSR for multicast or broadcast frames because both duplicate frames A & B circulate the full ring.

5.3.2 HSR Unicast Topology

With unicast frames, there is just one destination, and the frames are sent to that destination alone. All non-recipient devices simply pass the frames on. They do not process them in any way. In other words, D frames are produced only for the receiving DANH. This is illustrated below.

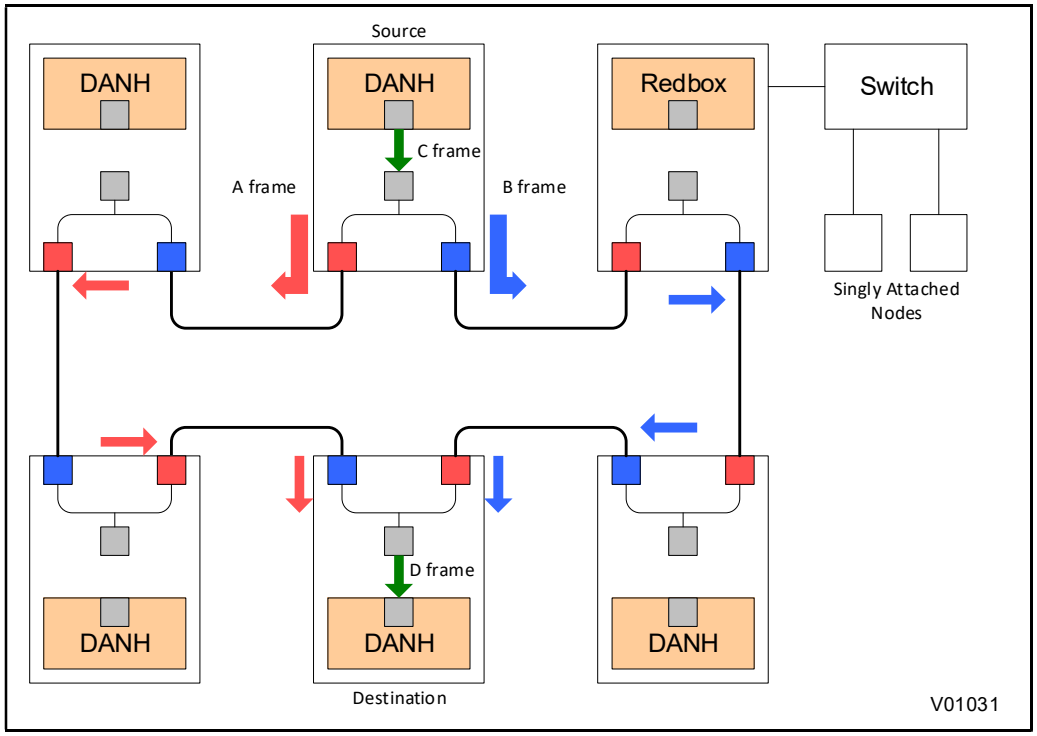

Figure 6: HSR Unicast Topology

For unicast frames, the whole bandwidth is available as both frames A & B stop at the destination node.

5.3.3 HSR Application in the Substation

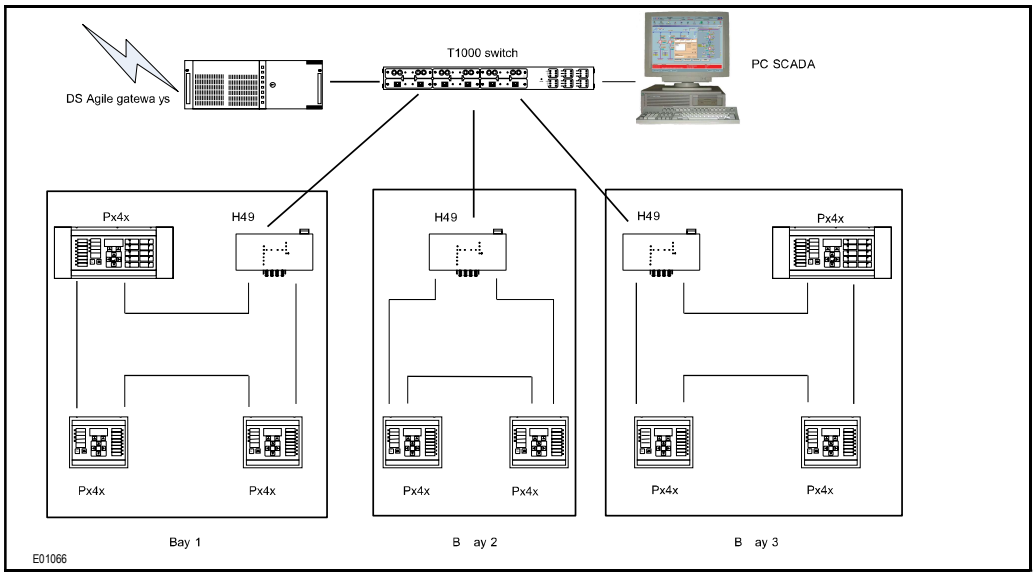

Figure 7: HSR Application in the Substation

5.4 Rapid Spanning Tree Protocol

RSTP is a standard used to quickly reconnect a network fault by finding an alternative path. It stops network loops whilst enabling redundancy. It can be used in star or ring connections as shown in the following figure.

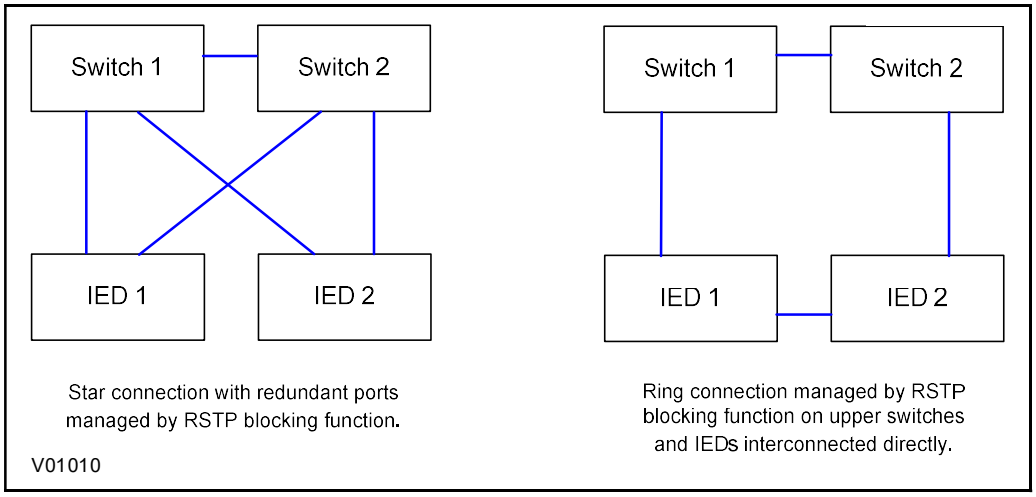

Figure 8: IED attached to Redundant Ethernet Star or Ring Circuit

The RSTP implementation in this product is compatible with any devices that use RSTP.

RSTP can recover network faults quickly, but the fault recovery time depends on the number of devices on the network and the network topology. A typical figure for the fault recovery time is 300ms. Therefore, RSTP cannot achieve the “bumpless” redundancy that some other protocols can.

Refer to IEEE 802.1D 2004 standard for detailed information about the operation of the protocol.

5.5 Configuring IP Addresses

An IP address is a logical address assigned to a device that uses the Internet Protocol (IP) for communication with other devices. IP addresses are represented using Decimal Dot Notation where four sets of decimal numbers are separated by dots as follows:

XXX.XXX.XXX.XXX

For example: 10.86.254.85

An IP address in a network is usually associated with a subnet mask. The subnet mask defines which network the device belongs to. A subnet mask has the same form as an IP address.

For example:

255.255.255.0

Both the IED and the REB each have their own IP address. The following diagram shows the IED as IP1 and the REB as IP2.

Note: IP1 and IP2 are different but use the same subnet mask.

The switch IP address must be configured through the Ethernet network.

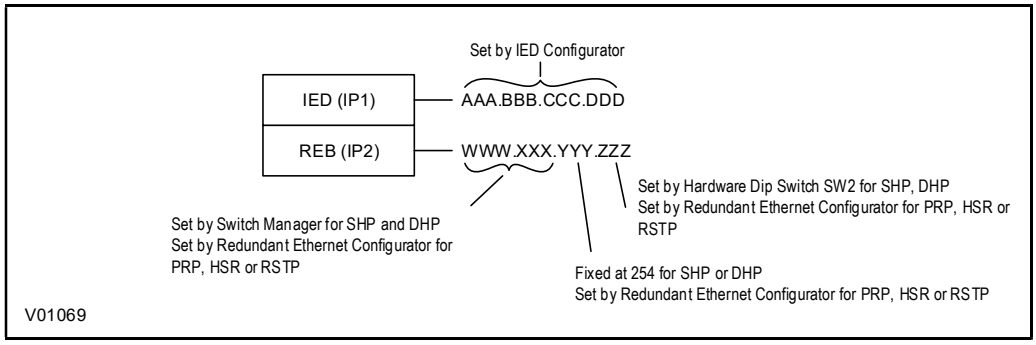

Figure 9: IED and REB IP Address Configuration

5.5.1 Configuring the IED IP Address

If you are using IEC 61850, set the IED IP address using the IEC 61850 Configurator software. In the IEC 61850 Configurator, set **Media** to **Single Copper or Redundant Fibre**.

If you are using DNP3 over Ethernet, set the IED IP address by editing the DNP3 file, using the DNP3 Configurator software. In the DNP3 Configurator, set the **Ethernet Media** to **Copper**, even though the redundant Ethernet network uses fibre optic cables.

5.5.2 Configuring the REB IP Address

The board IP address must be configured before connecting the IED to the network to avoid an IP address conflict. The way you configure the IP address depends on the redundancy protocol you have chosen.

PRP/HSR/RSTP

If using PRP, HSR or RSTP, you configure the REB IP address using the Redundant Ethernet Configurator software.

5.6 Redundant Ethernet Configurator

The Redundant Ethernet Configurator tool is intended for MiCOM Px4x IEDs with redundant Ethernet using PRP (Parallel Redundancy Protocol), HSR (High-availability Seamless Redundancy) or RSTP. This tool is used to identify IEDs, switch between PRP/HSR/RSTP or configure their parameters, configure the redundancy IP address, or configure the SNTP IP address.

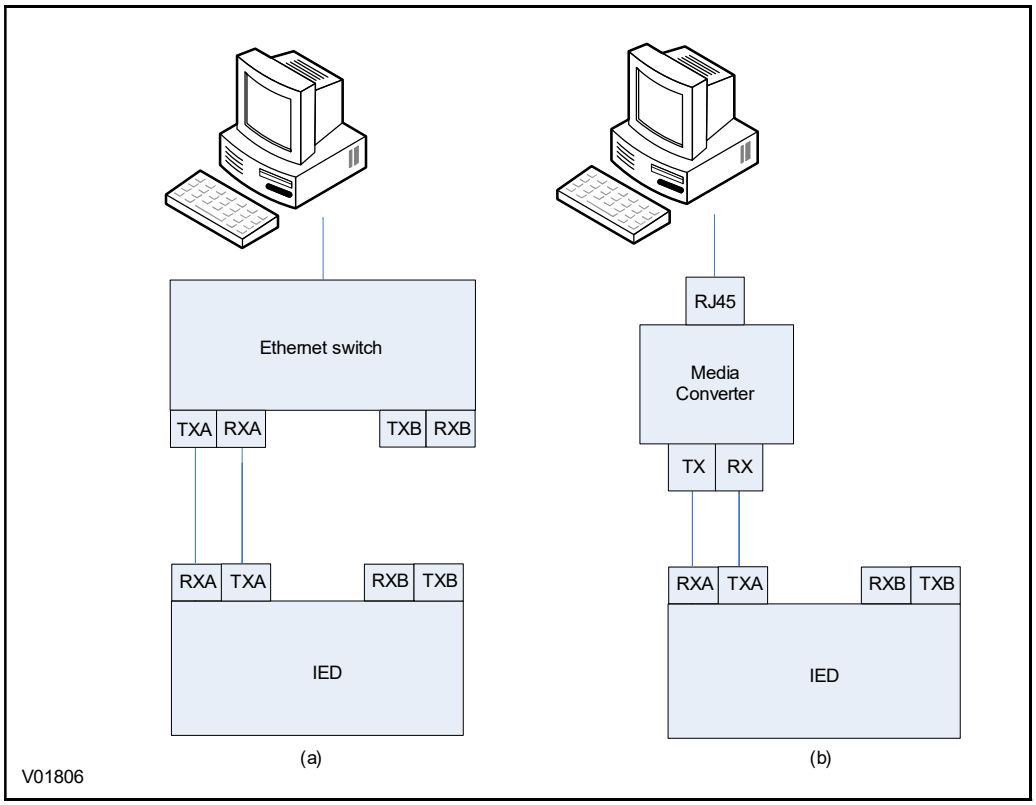

Figure 10: Connection using (a) an Ethernet switch and (b) a media converter

5.6.1 Starting the Configurator

To start the configurator:

1. Select the Redundant Ethernet Configurator from the 'Ethernet Configuration' tile in MiCOM S1 Agile.
2. The Login screen appears. For user mode login, enter the **Login name** as **User** and click **OK** with no password.
3. If the login screen does not appear, check all network connections.
4. The main window appears. In the bottom right-hand corner of the main window, click the **Language** button to select the language.
5. The **Network Board** drop-down list shows the Network Board, IP Address and MAC Address of the PC in which the Configurator is running.

5.6.2 PRP/HSR Device identification

To configure the redundant Ethernet board, go to the main window and click the **Identify Device** button. A list of devices is shown with the following details:

- Device address
- MAC address
- Version number of the firmware
- SNTP IP address
- Date & time of the real-time clock, from the board.

Select the device you wish to configure. The MAC address of the selected device is highlighted.

5.6.3 Selecting the Device Mode

You must now select the device mode that you wish to use. This will be either PRP or HSR. To do this, select the appropriate radio button then click the **Update** button. You will be asked to confirm a device reboot. Click **OK** to confirm.

5.6.4 PRP/HSR IP Address Configuration

To change the network address component of the IP address:

1. From the main window click the **IP config** button. The **Device Setup** screen appears.
2. Enter the required board IP address and click **OK**. This is the redundancy network address, not the IEC 61850 IP address.
3. The board network address is updated and displayed in the main window.

5.6.5 SNTP IP Address Configuration

To Configure the SNTP server IP address:

1. From the main window click the **SNTP Config** button. The Device setup screen appears.
2. Enter the required **MAC SNTP** address and server **IP SNTP Address**. Click **OK**.
3. The updated MAC and IP SNTP addresses appear in the main screen.

5.6.6 Check for Connected Equipment

To check what devices are connected to the device being monitored:

1. From the main window, select the device.
2. Click the **Equipment** button.
3. At the bottom of the main window, a box shows the ports where devices are connected and their MAC addresses.

5.6.7 PRP Configuration

To view or configure the PRP Parameters:

1. Ensure that you have set the device mode to **PRP**.
2. Click the **PRP/HSR Config** button. The **PRP Config** screen appears.
3. To view the available parameters, click the **Get PRP Parameters** button.
4. To change the parameters, click the **Set Parameters** button and modify their values.

If you need to restore the default values of the parameters, click the Restore Defaults button.

The configurable parameters are as follows:

- **Multicast Address**:

  Use this field to configure the multicast destination address. All DANPs in the network must be configured to operate with the same multicast address for the purpose of network supervision.

- **Node Forget Time**:

  This is the time after which a node entry is cleared in the nodes table.

- **Life Check Interval**:

  This defines how often a node sends a PRP_Supervision frame. All DANPs shall be configured with the same Life Check Interval.

5.6.8 HSR Configuration

To view or configure the HSR Parameters:

1. Click the **PRP/HSR Config** button. The **HSR Config** screen appears.
2. To view the available parameters in the board that is connected, click the **Retrieve HSR Parameters** from IED button.
3. To change the parameters, click the **Set Parameters** button and modify their values.

If you need to restore the default values of the parameters, click the **Restore Defaults** button.

The configurable parameters are as follows:

- **Multicast Address**:

  Use this field to configure the multicast destination address. All DANPs in the network must be configured to operate with the same multicast address for the purpose of network supervision.
- **Node Forget Time**:

  This is the time after which a node entry is cleared in the nodes table.
- **Life Check Interval**:

  This defines how often a node sends a PRP_Supervision frame. All DANPs must be configured with the same Life Check Interval.
- **Proxy Node Table Forget Time**:

  This is the time after which a node entry is cleared in the ProxyTable.
- **Proxy Node Table Max Entries**:

  This is the maximum number of entries in the ProxyTable.
- **Entry Forget Time**:

  This is the time after which an entry is removed from the duplicates.
- **Node Reboot Interval**:

  This is the minimum time during which a node that reboots remains silent.

5.6.9 Filtering Database

The Filtering Database is used to determine how frames are forwarded or filtered across the on-board Ethernet switch. Filtering information specifies the set of ports to which frames received from a specific port are forwarded.

The Ethernet switch examines each received frame to see if the frame's destination address matches the source address listed in the Filtering Database. If there is a match, the device uses the filtering/forwarding information for that source address to determine how to forward or filter the frame. Otherwise, the frame is forwarded to all the ports in the Ethernet switch (broadcast).

General tab

The Filtering Database contains two types of entry: static and dynamic. The Static Entries are the source addresses entered by an administrator. The Dynamic Entries are the source addresses learnt by the switch process. The Dynamic Entries are removed from the Filtering Database after the Ageing Time. The Database holds a maximum of 1024 entries.

1. To access the forwarding database functions, if required, click the Filtering Database button in the main window.
2. To view the Forwarding Database Size, Number of Static Entries and Number of Dynamic Entries, click **Read Database Info**.
3. To set the Aging Time, enter the number of seconds in the text box and click the Set button.

Filtering Entries tab

The Filtering Database configuration pages are used to view, add or delete entries from the Filtering Database. This feature is available only for the administrator. This Filtering Database is mainly used during the testing to verify the PRP/HSR functionality. To add an entry in the forwarding database, click the **Filtering Entries** tab. Configure as follows:

1. Select the Port Number and MAC Address
2. Set the Entry type (Dynamic or Static)
3. Set the cast type (Unicast or Multicast)
4. Set the MGMT and Rate Limit
5. Click the **Create** button. The new entry appears in the forwarding database.

To delete an entry from the forwarding database, select the entry and click the **Delete Entry** button.

Goose Filtering tab

This page configures the source MACs from which GOOSE messages will be allowed or blocked. The filtering can be configured by either the MAC address range boxes or by selecting or unselecting the individual MAC addresses in the MAC table. After you have defined the addresses to be allowed or blocked you need to update the table and apply the filter:

- **Update Table**:

  This updates the MAC table according to the filtering range entered in the MAC address range boxes.

- **Apply Filter**:

  This applies the filtering configuration in the MAC table to the HSR/PRP board.

5.6.10 End of Session

To finish the session:

1. In the main window, click the **Quit** button, a new screen appears.
2. If a database backup is required, click **Yes**, a new screen appears.
3. Click the ... button to browse the path. Enter the name in the text box.

5.7 RSTP Configurator

The RSTP Configurator tool is intended for MiCOM Px4x IEDs with redundant Ethernet using RSTP (Rapid Spanning Tree Protocol). This tool is used to identify IEDs, configure the redundancy IP address, configure the SNTP IP address and configure the RSTP parameters.

5.7.1 Connecting the IED to a PC

Connect the IED to the PC on which the Configurator tool is used. This connection is done through an Ethernet switch or through a media converter.

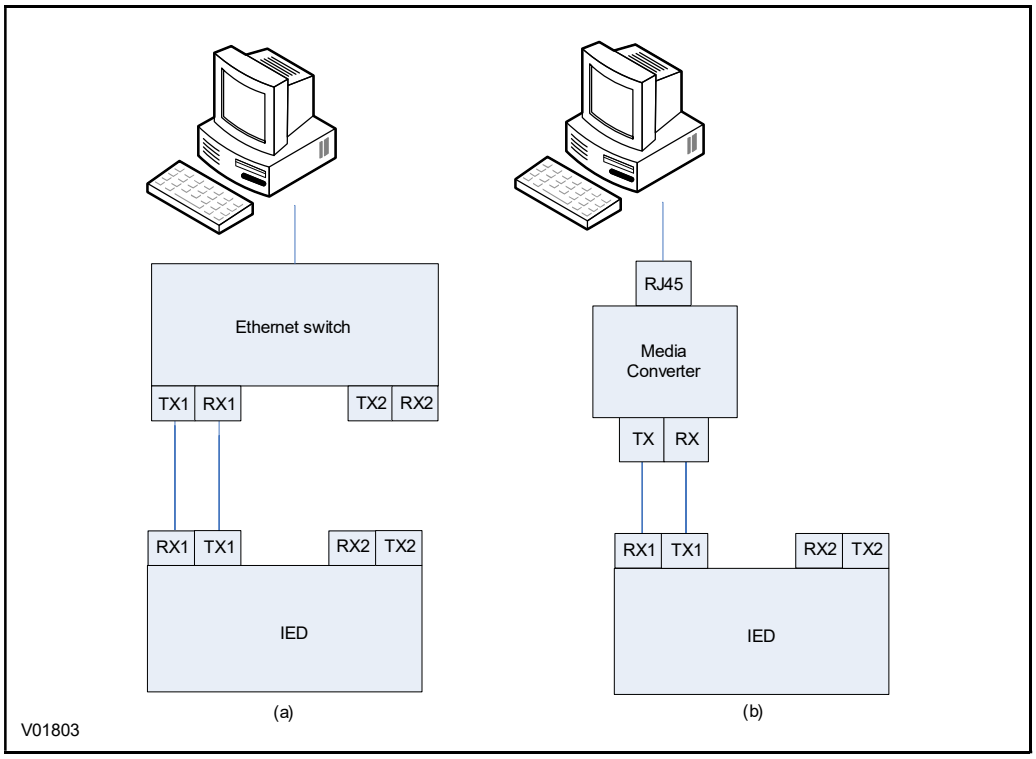

Figure 11: Connection using (a) an Ethernet switch and (b) a media converter

5.7.2 Installing the Configurator

To install the configurator:

1. Double click the WinPcap installer.
2. Double click the Configurator installer.
3. Click **Next** and follow the on-screen instructions.

5.7.3 Starting the Configurator

To start the configurator:

1. Select the Configurator from the Windows **Programs** menu.
2. The Login screen appears. For user mode login, enter the **Login name** as **User** and click **OK** with no password.
3. If the login screen does not appear, check all network connections.
4. The main window appears. In the bottom right-hand corner of the main window, click the **Language** button to select the language.
5. The **Network Board** drop-down list shows the Network Board, IP Address and MAC Address of the PC in which the Configurator is running.

5.7.4 RSTP Device Identification

To configure the redundant Ethernet board, go to the main window and click Identify Device.

Note: Due to the time needed to establish the RSTP protocol, wait 25 seconds between connecting the PC to the IED and clicking the Identify Device button.

The redundant Ethernet board connected to the PC is identified and its details are listed, as follows:

- Device address
- MAC address
- Version number of the firmware
- SNTP IP address
- Date & time of the real-time clock, from the board.

5.7.5 RSTP IP Address Configuration

To change the network address component of the IP address from the main window click the **IP Config** button:

1. The **Device Setup** screen appears showing the **IP Base Address**. This is the board redundancy network address, not the IEC 61850 IP address.
2. Enter the required board IP address.
3. Click **OK**. The board network address is updated and displayed in the main window.

5.7.6 SNTP IP Address Configuration

To Configure the SNTP server IP address:

1. From the main window click the **SNTP Config** button. The Device setup screen appears.
2. Enter the required **MAC SNTP** address and server IP SNTP Address. Click **OK**.
3. The updated MAC and IP SNTP addresses appear in the main screen.

5.7.7 Check for Connected Equipment

To check what devices are connected to the device being monitored:

1. From the main window, select the device.
2. Click the **Equipment** button.
3. At the bottom of the main window, a box shows the ports where devices are connected and their MAC addresses.

5.7.8 RSTP Configuration

1. To view or configure the RSTP Bridge Parameters, from the main window, click the device address to select the device. The selected device MAC address appears highlighted.
2. Click the **RSTP Config** button. The **RSTP Config** screen appears.
3. To view the available parameters in the board that is connected, click the **Get RSTP Parameters** button.
4. To set the configurable parameters such as Bridge Max Age, Bridge Hello Time, Bridge Forward Delay, and Bridge Priority, modify the parameter values according to the following table and click **Set RSTP Parameters**.

S.No	Parameter	Default Value (Second)	Minimum Value (Second)	Maximum Value (Second)
1	Bridge Max Age	20	6	40
2	Bridge Hello Time	2	1	10
3	Bridge Forward Delay	15	4	30
4	Bridge Priority	32768	0	61440
5	Bridge Max Age	20	6	40

5.7.8.1 Bridge Parameters

To read the RSTP bridge parameters from the board,

1. From the main window click the device address to select the device. The **RSTP Config** window appears, and the default tab is **Bridge Parameters**.
2. Click the **Get RSTP Parameters** button. This displays all the RSTP bridge parameters from the Ethernet board.
3. To modify the RSTP parameters, enter the values and click **Set RSTP Parameters**.
4. To restore the default values, click **Restore Default** and click **Set RSTP Parameters**.
5. The greyed parameters are read-only and cannot be modified.

Note: When assigning the bridge priority, make sure the root of the network is the Ethernet switch, not the IEDs. This reduces the number of hops to reach all devices in the network. Also make sure the priority values for all IEDs are higher than that of the switch.

5.7.8.2 Port Parameters

This function is useful if you need to view the parameters of each port.

1. From the main window, click the device address to select the device. The **RSTP Config** window appears.
2. Select the **Port Parameters** tab, then click **Get Parameters** to read the port parameters. Alternatively, select the port numbers to read the parameters.

5.7.8.3 Port States

This is used to see which ports of the board are enabled or disabled.

1. From the main window, click the device address to select the device. The **RSTP Config** window appears.
2. Select the **Port States** tab then click the **Get Port States** button. This lists the ports of the Ethernet board. A tick shows they are enabled.

5.7.8.4 End of Session

To finish the session:

1. In the main window, click the **Quit** button, a new screen appears.
2. If a database backup is required, click **Yes**, a new screen appears.
3. Click the ... button to browse the path. Enter the name in the text box.

6. SIMPLE NETWORK MANAGEMENT PROTOCOL (SNMP)

Simple Network Management Protocol (SNMP) is a network protocol designed to manage devices in an IP network. The MiCOM P40 Modular products can provide up to two SNMP interfaces on Ethernet models; one to the IED's Main Processor for device level status information, and another directly to the redundant Ethernet board (where applicable) for specific Ethernet network level information.

Two versions of SNMP are supported: Version 2c, and a secure implementation of version 3 that includes cyber-security. Only the Main Processor SNMP interface supports Version 3.

6.1 SNMP Management Information Bases

SNMP uses a Management Information Base (MIB), which contains information about parameters to supervise. The MIB format is a tree structure, with each node in the tree identified by a numerical Object Identifier (OID). Each OID identifies a variable that can be read using SNMP with the appropriate software. The information in the MIB is standardized.

Each device in a network (workstation, server, router, bridge, etc.) maintains a MIB that reflects the status of the managed resources on that system, such as the version of the software running on the device, the IP address assigned to a port or interface, the amount of free hard drive space, or the number of open files. The MIB does not contain static data, but is instead an object-oriented, dynamic database that provides a logical collection of managed object definitions. The MIB defines the data type of each managed object and describes the object.

6.2 Main Processor MIBS Structure

The Main Processor MIB uses a private OID with a specific GE Vernova number assigned by the IANA. Some items in this MIB also support SNMP traps (where indicated). These are items that can automatically notify a host without being read.

Address											Name	Trigger Trap?
0											ROOT NODE	
	1										ISO	
		3									Org	
			6								DOD	
				1							Internet	
					4						Private	
						1					Enterprise	
							55461				GE-Grid (IANA No)	
								1			Px4x	
									1		System Data	
										1	Description	YES
										2	Plant Reference	YES
										3	Model Number	NO
										4	Serial Number	NO
										5	Frequency	NO
										6	Plant Status	YES
										7	Active Group	YES
										8	Software Ref.1	NO
										9	Software Ref.2	NO
										10	Access Level (UI)	YES
									2		Date and Time	
										1	Date Time	NO
										2	IRIG-B Status	YES
										3	Battery Status	YES
										4	Active Sync source	YES
										5	SNTP Server 1	NO
										6	SNTP Server 2	NO
										7	SNTP Status	YES

Address											Name	Trigger Trap?
										8	PTP Status	YES
									3		System Alarms	
										1	Invalid Message Format	YES
										2	Main Protection Fail	YES
										3	Comms Changed	YES
										4	Max Prop. Alarm	YES
										5	9-2 Sample Alarm	YES
										6	9-2LE Cfg Alarm	YES
										7	Battery Fail	YES
										8	Rear Communication Fail	YES
										9	GOOSE IED Missing	YES
										10	Intermicom loopback	YES
										11	Intermicom message fail	YES
										12	Intermicom data CD fail	YES
										13	Intermicom Channel fail	YES
										14	Backup setting fail	YES
										15	User Curve commit to flash failure	YES
										16	SNTP time Sync fail	YES
										17	PTP failure alarm	YES
									4		Device Mode	
										1	IED Mod/Beh	YES
										2	Simulation Mode of Subscription	YES

6.3 Redundant Ethernet Board MIB Structure

The Redundant Ethernet board MIB uses three types of OID:

- sysDescr
- sysUpTime
- sysName

MIB Structure for RSTP

Address												Name
0												CCITT
	1											ISO
		3										Org
			6									DOD
				1								Internet
					2							mgmt
						1						Mib-2
							1					sys
								1				sysDescr
								3				sysUpTime
								4				sysName
Remote Monitoring												
							16					RMON
								1				statistics
									1			etherstat
										1		etherStatsEntry
											9	etherStatsUndersizePkts
											10	etherStatsOversizePkts
											12	etherStatsJabbers
											13	etherStatsCollisions
											14	etherStatsPkts64Octets
											15	etherStatsPkts65to127Octets
											16	etherStatsPkts128to255Octets

Address												Name
											17	etherStatsPkts256to511Octets
											18	etherStatsPkts512to1023Octets

MIB Structure for PRP/HSR

Address												Name
0												ITU
	1											ISO
		0										Standard
			62439									IECHighavailibility
				3								PRP
					1							linkRedundancyEntityObjects
						0						lreConfiguration
							0					lreConfigurationGeneralGroup
								1				lreManufacturerName
								2				lreInterfaceCount
							1					lreConfigurationInterfaceGroup
								0				lreConfigurationInterfaces
									1			lreInterfaceConfigTable
										1		lreInterfaceConfigEntry
											1	lreInterfaceConfigIndex
											2	lreRowStatus
											3	lreNodeType
											4	lreNodeName
											5	lreVersionName
											6	lreMacAddressA
											7	lreMacAddressB
											8	lreAdapterAdminStateA
											9	lreAdapterAdminStateB
											10	lreLinkStatusA
											11	lreLinkStatusB
											12	lreDuplicateDiscard
											13	lreTransparentReception
											14	lreHsrLREMode
											15	lreSwitchingEndNode
											16	lreRedBoxIdentity
											17	lreSanA
											18	lreSanB
											19	lreEvaluateSupervision
											20	lreNodesTableClear
											21	lreProxyNodeTableClear
						1						lreStatistics
							1					lreStatisticsInterfaceGroup
								0				lreStatisticsInterfaces
									1			lreInterfaceStatsTable
											1	lreInterfaceStatsIndex
											2	lreCntTotalSentA
											3	lreCntTotalSentB
											4	lreCntErrWrongLANA
											5	lreCntErrWrongLANB
											6	lreCntReceivedA
											7	lreCntReceivedB
											8	lreCntErrorsA
											9	lreCntErrorsB
											10	lreCntNodes
											11	lreOwnRxCntA
											12	lreOwnRxCntB

Address												Name
									3			lreProxyNodeTable
										1		lreProxyNodeEntry
											1	reProxyNodeIndex
											2	reProxyNodeMacAddress
		3										Org
			6									Dod
				1								Internet
					2							mgmt
						1						mib-2
							1					System
								1				sysDescr
								3				sysUpTime
								5				sysName
								7				sysServices
							2					interfaces
								2				ifTable
									1			ifEntry
										1		ifIndex
										2		ifDescr
										3		ifType
										4		ifMtu
										5		ifSpeed
										6		ifPhysAddress
										7		ifAdminStatus
										8		ifOpenStatus
										9		ifLastChange
										10		ifInOctets
										11		ifInUcastPkts
										12		ifInNUcastPkts
										13		ifInDiscards
										14		ifInErrors
										15		ifInUnknownProtos
										16		ifOutOctets
										17		ifOutUcastPkts
										18		ifOutNUcastPkts
										19		ifOutDiscards
										20		ifOutErrors
										21		ifOutQLen
										22		ifSpecific
							16					rmon
								1				statistics
									1			etherStatsTable
										1		etherStatsEntry
											1	etherStatsIndex
											2	etherStatsDataSource
											3	etherStatsDropEvents
											4	etherStatsOctets
											5	etherStatsPkts
											6	etherStatsBroadcastPkts
											7	etherStatsMulticastPkts
											8	etherStatsCRCAlignErrors
											9	etherStatsUndersizePkts
											10	etherStatsOversizePkts
											11	etherStatsFragments
											12	etherStatsJabbers
											13	etherStatsCollisions

Address												Name
											14	etherStatsPkts64Octets
											15	etherStatsPkts65to127Octets
											16	etherStatsPkts128to255Octets
											17	etherStatsPkts256to511Octets
											18	etherStatsPkts512to1023Octets
											19	etherStatsPkts1024to1518Octets
											20	etherStatsOwner
											21	etherStatsStatus

6.4 Accessing the MIB

Various SNMP client software tools can be used. We recommend using an SNMP MIB browser, which can perform the basic SNMP operations such as GET, GETNEXT and RESPONSE.

Note: There are two IP addresses visible when communicating with the Redundant Ethernet Card via the fibre optic ports: Use the one for the IED itself to the Main Processor SNMP interface and use the one for the on-board Ethernet switch to access the Redundant Ethernet Board SNMP interface. See the Firmware Design chapter for more information.

6.5 Main Processor SNMP Configuration

Configure the main processor SNMP interface using the HMI panel. Two different versions are available: SNMPv2c and SNMPv3:

To enable the main processor SNMP interface:

1. Select the **COMMUNICATIONS** column and scroll to the **SNMP PARAMETERS** heading
2. You can select either v2C, V3 or both. Selecting None will disable the main processor SNMP interface.

SNMP Trap Configuration

SNMP traps allow for unsolicited reporting between the IED and up to two SNMP managers with unique IP addresses. The device MIB details what information can be reported using Traps. To configure the SNMP Traps:

1. Move down to the cell **Trap Dest. IP 1** and enter the IP address of the first destination SNMP manager. Setting this cell to 0.0.0.0 disables the first Trap interface.
2. Move down to the cell **Trap Dest. IP 2** and enter the IP address of the second destination SNMP manager. Setting this cell to 0.0.0.0 disables the Second Trap interface.

SNMP V3 Security Configuration

SNMPv3 provides a higher level of security via authentication and privacy protocols. The IED adopts a secure SNMPv3 implementation with a user-based security model (USM).

Authentication is used to check the identity of users; privacy allows for encryption of SNMP messages. Both are optional; however, you must enable authentication in order to enable privacy. To configure these security options:

1. If SNMPv3 has been enabled, set the **Security Level** setting. There are three levels: without authentication and without privacy (**noAuthNoPriv**), with authentication but without privacy **(authNoPriv**), and with authentication and with privacy (**authPriv**).
2. If Authentication is enabled, use the **Auth Protocol** setting to select the authentication type. There are two options: **HMAC-MD5-96** or **HMAC-SHA-96**.
3. Using the **Auth Password** setting, enter the 8-character password to be used by the IED for authentication.
4. If privacy is enabled, use the **Encrypt Protocol** setting to set the 8-character password that will be used by the IED for encryption.

Note: When setting the SNMP browser for RBAC compatible relays, the Context Name should be ‘px4x’.

SNMP V2C Security Configuration

SNMPv2c implements authentication between the master and agent using a parameter called the **Community Name**. This is effectively the password, but it is not encrypted during transmission (this makes it inappropriate for some scenarios in which case version 3 should be used instead). To configure the SNMP 2c security:

1. If SNMPv2c has been enabled, use the **Community Name** setting to set the password that will be used by the IED and SNMP manager for authentication. This may be between one and 8 characters.

7. DATA PROTOCOLS

The products support a wide range of protocols to make them applicable to many industries and applications. The exact data protocols supported by a particular product depend on its chosen application, but the following table gives a list of the data protocols that are typically available.

SCADA Data Protocols

Data Protocol	Layer 1 Protocol	Description
Courier	K-Bus, RS232, RS485, Ethernet	Standard for SCADA communications developed by GE Vernova.
MODBUS	RS485	Standard for SCADA communications developed by Modicon.
IEC 60870-5-103	RS485	IEC standard for SCADA communications
DNP 3.0	RS485, Ethernet	Standard for SCADA communications developed by Harris. It is used mainly in North America.
IEC 61850	Ethernet	IEC standard for substation automation. Facilitates interoperability.

The relationship of these protocols to the lower-level physical layer protocols is as follows:

Data Protocols	IEC 60870-5-103			
	MODBUS	IEC 61850		
	DNP3.0	DNP3.0		
	Courier	Courier	Courier	Courier
Data Link Layer	EIA(RS)485	Ethernet	EIA(RS)232	K-Bus
Physical Layer	Copper or Optical Fibre			

7.1 Courier

This section should provide sufficient detail to enable understanding of the Courier protocol at a level required by most users. For situations where the level of information contained in this manual is insufficient, further publications (R6511 and R6512) containing in-depth details about the protocol and its use, are available on request.

Courier is a GE Vernova proprietary communication protocol. Courier uses a standard set of commands to access a database of settings and data in the IED. This allows a master to communicate with a number of slave devices. The application-specific elements are contained in the database rather than in the commands used to interrogate it, meaning that the master station does not need to be preconfigured. Courier also provides a sequence of event (SOE) and disturbance record extraction mechanism.

7.1.1 Physical Connection and Link Layer

Courier can be used with three physical layer protocols: K-Bus, EIA(RS)232 or EIA(RS)485.

Several connection options are available for Courier

- The front USB Type-B port (for connection to Settings application software on, for example, a laptop
- Rear Port 1 (RP1) - for permanent SCADA connection via RS485 or K-Bus
- Optional fibre port (RP1 in slot A) - for permanent SCADA connection via optical fibre
- Optional Rear Port 2 (RP2) - for permanent SCADA connection via RS485, K-Bus, or RS232

For either of the rear ports, both the IED address, and baud rate can be selected using the front panel menu or by the settings application software.

7.1.2 Courier Database

The Courier database is two-dimensional and resembles a table. Each cell in the database is referenced by a row and column address. Both the column and the row can take a range from 0 to 255 (0000 to FFFF Hexadecimal. Addresses in the database are specified as hexadecimal values, for example, 0A02 is column 0A row 02. Associated settings or data are part of the same column. Row zero of the column has a text string to identify the contents of the column and to act as a column heading.

The product-specific menu databases contain the complete database definition.

7.1.3 Setting Categories

There are two main categories of settings in protection IEDs:

- Control and support settings
- Protection settings

Except for the Disturbance Recorder settings, changes made to the control and support settings are implemented immediately and stored in non-volatile memory. Changes made to the Protection settings, and the Disturbance Recorder settings are stored in 'scratchpad' memory and are not immediately implemented. These need to be committed by writing to the **Save Changes** cell in the **CONFIGURATION** column.

7.1.4 Setting Changes

Courier provides two mechanisms for making setting changes. Either method can be used for editing any of the settings in the database.

Method 1

This uses a combination of three commands to perform a settings change:

First, enter Setting mode: This checks that the cell is settable and returns the limits.

- Preload Setting: This places a new value into the cell. This value is echoed to ensure that setting corruption has not taken place. The validity of the setting is not checked by this action.
- Execute Setting: This confirms the setting change. If the change is valid, a positive response is returned. If the setting change fails, an error response is returned.
- Abort Setting: This command can be used to abandon the setting change.

This is the most secure method. It is ideally suited to on-line editors because the setting limits are extracted before the setting change is made. However, this method can be slow if many settings are changed because three commands are required for each change.

Method 2

The Set Value command can be used to directly change a setting. The response to this command is either a positive confirm or an error code to indicate the nature of a failure. This command can be used to implement a setting more rapidly than the previous method; however, the limits are not extracted from the relay. This method is therefore most suitable for off-line setting editors such as MiCOM S1 Agile, or for issuing pre-configured control commands.

7.1.5 Event Extraction

You can extract events either automatically (rear serial port only) or manually (either serial port). For automatic extraction, all events are extracted in sequential order using the Courier event mechanism. This includes fault and maintenance data if appropriate. The manual approach allows you to select events, faults, or maintenance data as desired.

7.1.5.1 Automatic Event Extraction

This method is intended for continuous extraction of event and fault information as it is produced. It is only supported through the rear Courier port.

When new event information is created, the **Event** bit is set in the **Status** byte. This indicates to the Master device that event information is available. The oldest, non-extracted event can be extracted from the IED using the **Send Event** command. The IED responds with the event data.

Once an event has been extracted, the **Accept Event** command can be used to confirm that the event has been successfully extracted. When all events have been extracted, the **Event** bit is reset. If there are more events still to be extracted, the next event can be accessed using the **Send Event** command as before.

7.1.5.2 Manual Event Record Extraction

The **VIEW RECORDS** column (location 01) is used for manual viewing of event, fault, and maintenance records. The contents of this column depend on the nature of the record selected. You can select events by event number and directly select a fault or maintenance record by number.

EVENT RECORD SELECTION ('SELECT EVENT' CELL: 0101)

This cell can set the number of stored events. For simple event records (Type 0), cells 0102 to 0105 contain the event details. A single cell is used to represent each of the event fields. If the event selected is a fault or maintenance record (Type 3), the remainder of the column contains the additional information.

FAULT RECORD SELECTION ('SELECT FAULT' CELL: 0105)

This cell can be used to select a fault record directly, using a value between 0 and 4 to select one of up to five stored fault records. (0 is the most recent fault and 4 is the oldest). The column then contains the details of the fault record selected.

MAINTENANCE RECORD SELECTION ('SELECT MAINT' CELL: 01F0)

This cell can be used to select a maintenance record using a value between 0 and 4. This cell operates in a similar way to the fault record selection.

If this column is used to extract event information, the number associated with a particular record changes when a new event or fault occurs.

Event types

Events will be created by the relay under the following circumstances:

- Change of state of output contact
- Change of state of opto input
- Protection element operation
- Alarm condition
- Setting change
- Password entered/timed out
- Fault record (Type 3 Courier Event)
- Maintenance record (Type 3 Courier Event)

Event record format

The IED returns the following fields when the Send Event command is invoked:

- Cell reference
- Time stamp
- Cell text
- Cell value

The Menu Database contains tables of possible events and shows how the contents of the above fields are interpreted. Fault and Maintenance records return a Courier Type 3 event, which contains the above fields plus two additional fields:

- Event extraction column
- Event number

These events contain additional information, which is extracted from the IED using column B4. Row 01 contains a **Select Record** setting that allows the fault or maintenance record to be selected. This setting should be set to the event number value returned in the record. The extended data can be extracted from the IED by uploading the text and data from the column.

7.1.6 Disturbance Record Extraction

The stored disturbance records are accessible through the Courier interface. The records are extracted using column (B4).

The **Select Record** cell can be used to select the record to be extracted. Record 0 is the oldest non-extracted record. Older records which have already been extracted are assigned positive values, while younger records are assigned negative values. To help automatic extraction through the rear port, the IED sets the **Disturbance** bit of the **Status** byte, whenever there are non-extracted disturbance records.

Once a record has been selected, using the above cell, the time and date of the record can be read from the **Trigger Time** cell (B402). The disturbance record can be extracted using the block transfer mechanism from cell B40B and saved in the COMTRADE format. The settings application software automatically does this.

7.1.7 Programmable Scheme Logic Settings

The programmable scheme logic (PSL) settings can be uploaded from and downloaded to the relay using the block transfer mechanism.

The following cells are used to perform the extraction:

- **Domain cell (B204):**

  Used to select either PSL settings (upload or download) or PSL configuration data (upload only)

- **Sub-Domain cell (B208)**:

  Used to select the Protection Setting Group to be uploaded or downloaded.

- **Version cell (B20C)**:

  Used on a download to check the compatibility of the file to be downloaded.

- **Transfer Mode cell (B21C)**:

  Used to set up the transfer process.

- **Data Transfer cell (B120)**:

  Used to perform upload or download.

The PSL settings can be uploaded and downloaded to and from the IED using this mechanism. The settings application software must be used to edit the settings. It also performs checks on the validity of the settings before they are transferred to the IED.

7.1.8 Courier Configuration

To configure the device:

1. Select the **CONFIGURATION** column and check that the Comms settings cell is set to Visible.
2. Select the **COMMUNICATIONS** column.
3. Move to the first cell down (**RP1 protocol**). This is a non-settable cell, which shows the chosen communication protocol in this case Courier.

RP1 Protocol Courier

4. Move down to the next cell (**RP1 Address**). This cell controls the address of the RP1 port on the device. Up to 32 IEDs can be connected to one spur. It is therefore necessary for each IED to have a unique address so that messages from the master control station are accepted by one IED only. Courier uses an integer number between 1 and 254 for the Relay Address. It is set to 255 by default, which must be changed. It is important that no two IEDs share the same address.

RP1 Address 1

5. Move down to the next cell (**RP1 InactivTimer**). This cell controls the inactivity timer. The inactivity timer controls how long the IED waits without receiving any messages on the rear port before revoking any password access that was enabled and discarding any changes. For the rear port this can be set for between 1 and 30 minutes.

RP1 Inactiv timer 10.00 mins.

6. If the optional fibre optic connectors are fitted, the **RP1 PhysicalLink** cell is visible. This cell controls the physical media used for communication (Copper or Fibre optic).

RP1 Physical link Copper

7. Move down to the next cell (**RP1 Card Status**). This cell is not settable. It displays the status of the chosen physical layer protocol for RP1

RP1 Card status K-Bus OK

8. Move down to the next cell (**RP1 Port Config**). This cell controls the type of serial connection. Select between K-Bus or RS485.

RP1 Port config. K-Bus

9. If using EIA(RS)485, the next cell (**RP1 Comms Mode**) selects the communication mode. The choice is either IEC 60870 FT1.2 for normal operation with 11-bit modems, or 10-bit no parity. If using K-Bus this cell will not appear.

RP1 Comms. Mode IEC 60870 FT1.2

10. If using EIA(RS)485, the next cell down controls the baud rate. Three baud rates are supported: 9600, 19200 and 38400. If using K-Bus this cell will not appear as the baud rate is fixed at 64 kbps.

RP1 Baud rate 19200

7.2 IEC 60870-5 103 (not available)

The specification IEC 60870-5-103 (Telecontrol Equipment and Systems Part 5 Section 103: Transmission Protocols), defines the use of standards IEC 60870-5-1 to IEC 60870-5-5, which were designed for communication with protection equipment

This protocol is not available.

7.3 DNP3.0 Communication (not available)

The DNP 3.0 protocol is defined and administered by the DNP User Group. Information about the user group, DNP 3.0 in general and protocol specifications can be found on their website: www.dnp.org

This protocol is not available.

7.4 MODBUS Communication (not available)

MODBUS is a master/slave communication protocol, which can be used for network control. In a similar fashion to Courier, the system works by the master device initiating all actions and the slave devices, (the relays), responding to the master by supplying the requested data or by taking the requested action. MODBUS communication is achieved via a twisted pair EIA(RS)485 connection to the rear port and can be used over 1000m with up to 32 slave devices.

This protocol is not available.

7.5 IEC 61850

This section describes how the IEC 61850 standard is applied to GE Vernova products. It is not a description of the standard itself. The level at which this section is written assumes that the reader is already familiar with the IEC 61850 standard.

IEC 61850 is the international standard for Ethernet-based communication in substations. It enables integration of all protection, control, measurement and monitoring functions within a substation, and additionally provides the means for interlocking and inter-tripping. It combines the convenience of Ethernet with the security which is essential in substations today.

There are two editions of most parts of the IEC 61850 standard: edition 1 and edition 2. The edition which this product supports depends on the Software Version.

From Software Version 91 onwards, it is possible to select between edition 1 and edition 2. Switching between edition 1 and edition 2 is described in the Selection of the IEC 61850 Edition section.

An additional section detailing the enhancements in edition 2 models is documented later in this chapter, if applicable.

7.6 Benefits of IEC 61850

The standard provides:

- Standardized models for IEDs and other equipment within the substation
- Standardized communication services (the methods used to access and exchange data)
- Standardized formats for configuration files
- Peer-to-peer (e.g. relay to relay) communication

The standard adheres to the requirements laid out by the ISO OSI model and therefore provides complete vendor interoperability and flexibility on the transmission types and protocols used. This includes mapping of data onto Ethernet, which is becoming more widely used in substations, in favour of RS485. Using Ethernet in the substation offers many advantages, most significantly including:

- Ethernet allows high-speed data rates (currently 100 Mbps, rather than tens of kbps or less used by most serial protocols)
- Ethernet provides the possibility to have multiple clients
- Ethernet is an open standard in everyday use
- There is a wide range of Ethernet-compatible products that may be used to supplement the LAN installation (hubs, bridges, switches)

7.6.1 IEC 61850 Interoperability

A major benefit of IEC 61850 is interoperability. IEC 61850 standardizes the data model of substation IEDs, which allows interoperability between products from multiple vendors.

An IEC 61850-compliant device may be interoperable, but this does not mean it is interchangeable. You cannot simply replace a product from one vendor with that of another without reconfiguration. However, the terminology is pre-defined and anyone with prior knowledge of IEC 61850 should be able to integrate a new device very quickly without having to map all of the new data. IEC 61850 brings improved substation communications and interoperability to the end user, at a lower cost.

7.6.2 The IEC 61850 Data Model

The data model of any IEC 61850 IED can be viewed as a hierarchy of information, whose nomenclature and categorization are defined and standardized in the IEC 61850 specification.

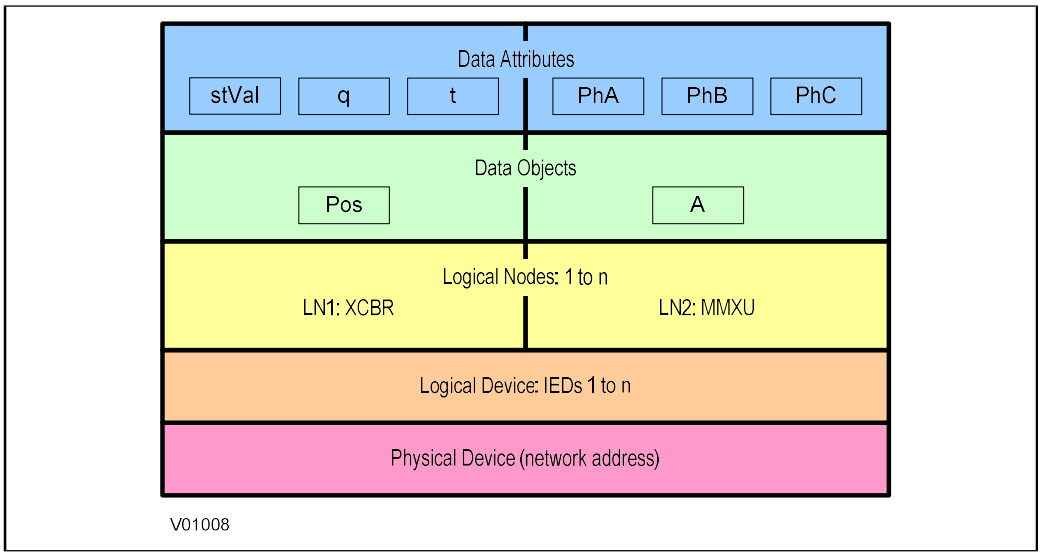

Figure 12: Data Model Layers in IEC 61850

The levels of this hierarchy can be described as follows:

Data Frame Format

Layer	Description
Physical Device	Identifies the actual IED within a system. Typically, the device's name or IP address can be used (for example Feeder_1 or 10.0.0.2.
Logical Device	Identifies groups of related Logical Nodes within the Physical Device. For the MiCOM IEDs, 5 Logical Devices exist: Control, Measurements, Protection, Records, System.
Wrapper/Logical Node Instance	Identifies the major functional areas within the IEC 61850 data model. Either 3 or 6 characters are used as a prefix to define the functional group (wrapper) while the actual functionality is identified by a 4-character Logical Node name suffixed by an instance number. For example, XCBR1 (circuit breaker), MMXU1 (measurements), FrqPTOF2 (over frequency protection, stage 2).
Data Object	This next layer is used to identify the type of data you will be presented with. For example, Pos (position) of Logical Node type XCBR.
Data Attribute	This is the actual data (measurement value, status, description, etc.). For example, stVal (status value) indicates actual position of circuit breaker for Data Object type Pos of Logical Node type XCBR.

7.6.3 IEC 61850 in MiCOM Relays

IEC 61850 is implemented by using a separate Ethernet card. This Ethernet card manages most of the IEC 61850 implementation and data transfer to avoid any impact on the performance of the protection functions.

To communicate with an IEC 61850 IED on Ethernet, it is necessary only to know its IP address. This can then be configured into either:

- An IEC 61850 client (or master), for example a bay computer (MiCOM C264)
- An HMI
- An MMS browser, with which the full data model can be retrieved from the IED, without any prior knowledge of the IED

The IEC 61850 compatible interface standard provides capability for the following:

- Read access to measurements
- Refresh of all measurements at the rate of once per second.
- Generation of non-buffered reports on change of status or measurement
- SNTP time synchronization over an Ethernet link. (This is used to synchronize the IED's internal real time clock.
- GOOSE peer-to-peer communication
- Disturbance record extraction by file transfer. The record is extracted as an ASCII format COMTRADE file
- Controls (Direct and Select Before Operate)

Note: Setting changes are not supported in the current IEC 61850 implementation. Currently these setting changes are carried out using the settings application software.

7.6.4 IEC 61850 Data Model Implementation

The data model naming adopted in the IEDs has been standardized for consistency. Therefore, the Logical Nodes are allocated to one of the five Logical Devices, as appropriate.

The data model is described in the Model Implementation Conformance Statement (MICS) document, which is available as a separate document.

7.6.5 IEC 61850 Communication Services Implementation

The IEC 61850 communication services which are implemented in the IEDs are described in the Protocol Implementation Conformance Statement (PICS) document, which is available as a separate document

7.6.6 IEC 61850 Peer-to-Peer (GOOSE) Communications

The implementation of IEC 61850 Generic Object Oriented Substation Event (GOOSE) enables faster communication between IEDs offering the possibility for a fast and reliable system-wide distribution of input and output data values. The GOOSE model uses multicast services to deliver event information. Multicast messaging means that messages are sent to selected devices on the network. The receiving devices can specifically accept frames from certain devices and discard frames from the other devices. It is also known as a publisher-subscriber system. When a device detects a change in one of its monitored status points it publishes a new message. Any device that is interested in the information subscribes to the data it contains.

7.6.7 Mapping GOOSE Messages to Virtual Inputs

Each GOOSE signal contained in a subscribed GOOSE message can be mapped to any of the virtual inputs within the PSL. The virtual inputs allow the mapping to internal logic functions for protection control, directly to output contacts or LEDs for monitoring.

An IED can subscribe to all GOOSE messages but only the following data types can be decoded and mapped to a virtual input:

- BOOLEAN
- BSTR2
- INT16
- INT32
- INT8
- UINT16
- UINT32
- UINT8

7.6.7.1 IEC 61850 GOOSE Configuration

All GOOSE configuration is performed using the IEC 61850 Configurator tool available in the MiCOM S1 Agile software application.

All GOOSE publishing configuration can be found under the GOOSE Publishing tab in the configuration editor window. All GOOSE subscription configuration parameters are under the External Binding tab in the configuration editor window.

Settings to enable GOOSE signalling and to apply Test Mode are available using the HMI.

7.6.8 Ethernet Functionality

IEC 61850 Associations are unique and made between the client and server. If Ethernet connectivity is lost for any reason, the associations are lost and will need to be re-established by the client. The IED has a TCP_KEEPALIVE function to monitor each association and terminate any which are no longer active.

The IED allows the re-establishment of associations without disruption of its operation, even after its power has been removed. As the IED acts as a server in this process, the client must request the association. Uncommitted settings are cancelled when power is lost, and reports requested by connected clients are reset. The client must re-enable these when it creates the new association to the IED.

7.6.9 IEC 61850 Configuration

You cannot configure the device for IEC 61850 edition 1 using the HMI panel on the product. For this you must use the IEC 61850 Configurator, which is part of the settings application software. If the device is compatible with edition 2, you can configure it with the HMI. To configure IEC 61850 edition 2 using the HMI, you must first enable the IP From HMI setting, after which you can set the media (copper or fibre), IP address, subnet mask and gateway address.

IEC 61850 allows IEDs to be directly configured from a configuration file. The IED's system configuration capabilities are determined from an IED Capability Description file (ICD), supplied with the product. By using ICD files from the products to be installed, you can design, configure and test (using simulation tools), a substation's entire protection scheme before the products are installed into the substation.

To help with this process, the settings application software provides an IEC 61850 Configurator tool, which allows the pre-configured IEC 61850 configuration file to be imported and transferred to the IED. As well as this, you can manually create configuration files for all products, based on their original IED capability description (ICD file).

Other features include:

- The extraction of configuration data for viewing and editing.
- A sophisticated error checking sequence to validate the configuration data before sending to the IED.

Note: Some configuration data is available in the IEC 61850 CONFIG. column, allowing read-only access to basic configuration data.

7.6.9.1 IEC 61850 Configuration Banks

There are two configuration banks:

- Active Configuration Bank
- Inactive Configuration Bank

Any new configuration sent to the relay is automatically stored into the inactive configuration bank, therefore not immediately affecting the current configuration.

Following an upgrade, the IEC 61850 Configurator tool can be used to transmit a command, which authorizes activation of the new configuration contained in the inactive configuration bank. This is done by switching the active and inactive configuration banks. The capability of switching the configuration banks is also available using the **IEC61850 CONFIG.** column of the HMI.

The SCL Name and Revision attributes of both configuration banks are available in the **IEC61850 CONFIG.** column of the HMI.

7.6.9.2 IEC 61850 Network Connectivity

Configuration of the IP parameters and SNTP (Simple Network Time Protocol) time synchronization parameters is performed by the IEC 61850 Configurator tool. If these parameters are not available using an SCL (Substation Configuration Language) file, they must be configured manually.

Every IP address on the Local Area Network must be unique. Duplicate IP addresses result in conflict and must be avoided. Most IEDs check for a conflict on every IP configuration change and at power up and they raise an alarm if an IP conflict is detected.

The IED can be configured to accept data from other networks using the **Gateway** setting. If multiple networks are used, the IP addresses must be unique across networks.

7.6.9.3 Selection of the IEC 61850 Edition

From Software Version 90 onwards, it is possible to select between edition 1 and edition 2. Edition 1 and edition 2 implementations have different IEC 61850 data models and different ICD files. Only one can be active at any time in the product, so the selection is a decision related to system engineering.

Selection of edition 1 or edition 2 is done based on the configuration file (MCL) that is sent to the product and activated.

To configure the product for edition 1, start with the edition 1 ICD file. This can be done in one of two ways:

1. Using the system engineering process of an IEC 61850 system. In this case, import either the edition 1 ICD file (for example "P545____91A_ED1.ICD") or the edition 2 ICD file (for example "P545____91A_ED2.ICD"), as applicable, into the System Configuration Tool. Perform the system configuration, then export the configured file (.SCD or CID). Import this configured file into MiCOM S1 Agile's IEC 61850 Configurator.
2. Using the IED Configurator tool to manually configure the product. Launch the IED Configurator tool. Select **File**, **New** and then check only the **Edition 1** or **Edition 2** box, as applicable, and then proceed to select the product model and software version. Configure the parameters manually and save the MCL file.

In either case, the edition 1 or edition 2 configuration is activated in the product by sending the configuration file to the product from the IED Configurator and switching it to the Active Bank, after which the Ethernet application will restart with the new configuration.

7.6.9.4 IEC 61850 Edition 2

Many parts of the IEC 61850 standard have now been released as the second edition. This offers some significant enhancements including:

- Improved interoperability
- Many new logical nodes
- Better defined testing: it is now possible to perform off-line testing and simulation of functions

Edition 2 implementation requires use of version 3.2 of the IEC 61850 configurator, which is installed with version 1.2 of MiCOM S1 Agile.

IEC 61850 system - backward compatibility

An Edition 1 IED can operate with an Edition 2 IEC 61850 system, provided that the Edition 1 IEDs do not subscribe to GOOSE messages with data objects or data attributes which are only available in Edition 2.

The following figure explains this concept:

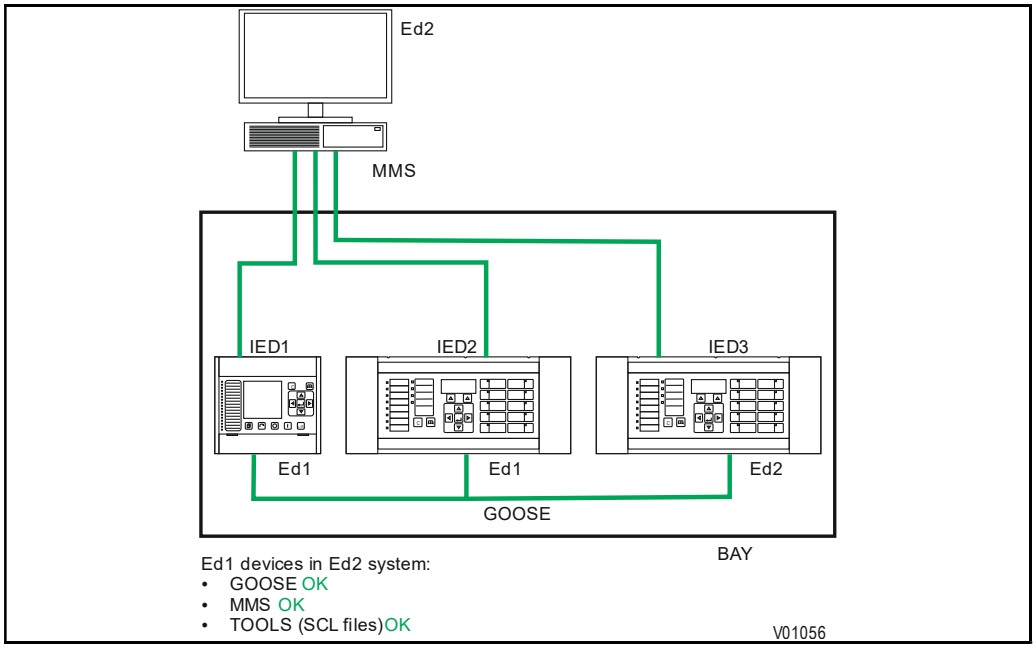

Figure 13: Edition 2 System - Backward Compatibility

An Edition 2 IED cannot normally operate within an Edition 1 IEC 61850 system. An Edition 2 IED can work for GOOSE messaging in a mixed system, providing the client is compatible with Edition 2.

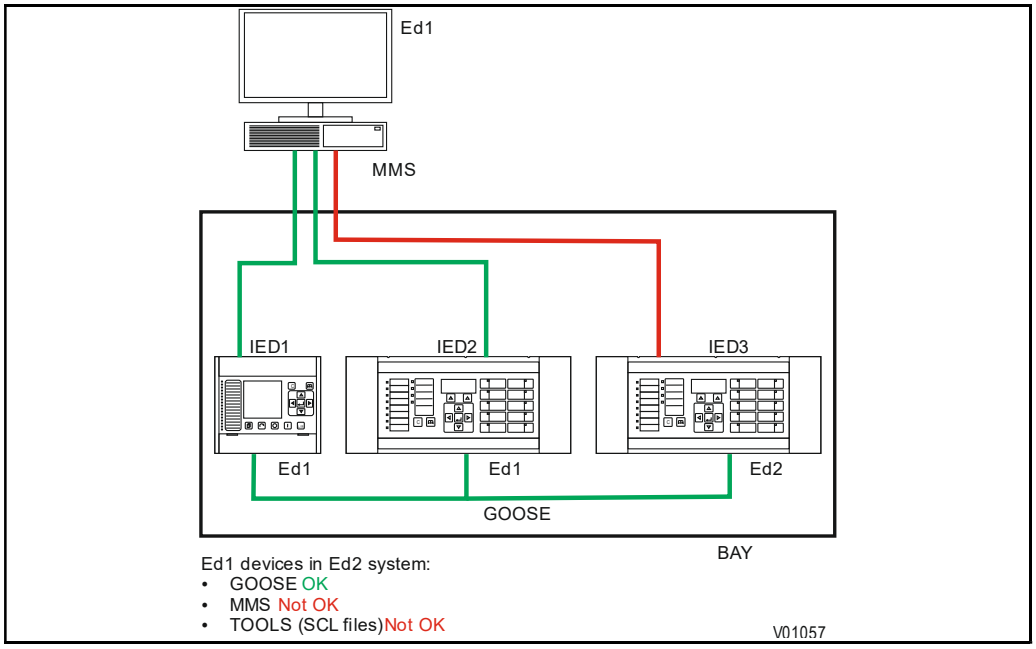

Figure 14: Edition 1 System - Forward Compatibility Issues

7.6.9.5 Edition-2 Common Data Classes

The following common data classes (CDCs) are new to Edition 2 and therefore should not be used in GOOSE control blocks in mixed Edition 1 and Edition 2 systems

- Histogram (HST)
- Visible string status (VSS)
- Object reference setting (ORG)
- Controllable enumerated status (ENC)
- Controllable analogue process value (APC)
- Binary controlled analogue process value (BAC)
- Enumerated status setting (ENG)
- Time setting group (TSG)
- Currency setting group (CUG)
- Visible string setting (VSG)
- Curve shape setting (CSG)

Of these, only ENS and ENC types are available from a MiCOM P40 IED when publishing GOOSE messages, so Data Objects using these Common Data Classes should not be published in mixed Edition 1 and Edition 2 systems.

For compatibility between Edition 1 and Edition 2 IEDs, SCL files using SCL schema version 2.1 must be used. For a purely Edition 2 system, use the schema version 3.1.

7.6.9.6 Standby Protection Redundancy

With digital substation architectures, measurements can be shared freely on the process bus across the substation and between different devices without any additional wiring. This is because there are no longer any electrical connections to instruments transformers that restrict the location of IEDs.

The new IEC 61850 Edition 2 test modes enable the introduction of standby protection IEDs at any location within the substation, which has access to both station and process buses. In the case of failure, these devices can temporarily replace the protection functions inside other IEDs.

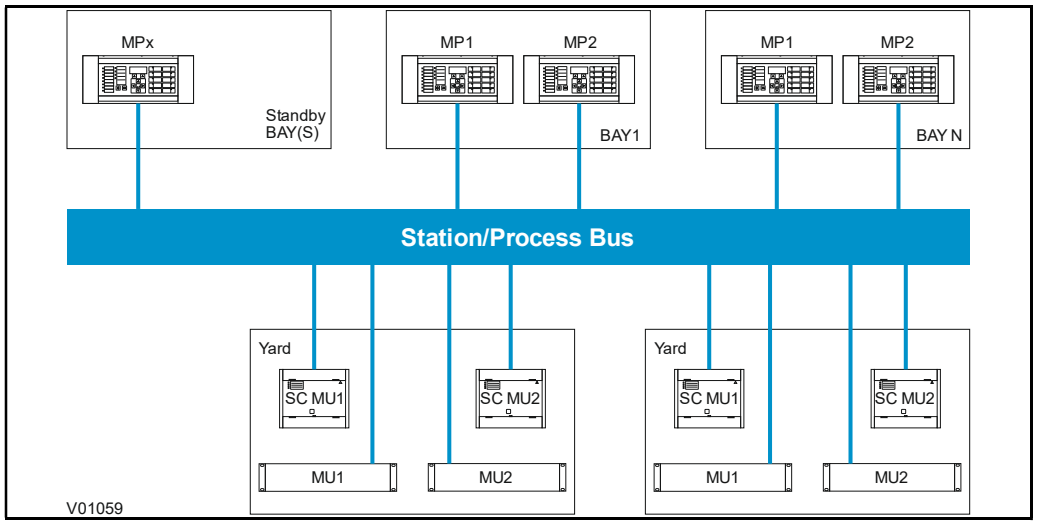

Figure 15: Example of Standby IED

See the example below. If a failure occurs in the Bay 1 protection IED (MP2), we could disable this device and activate a standby protection IED to replace its functionality.

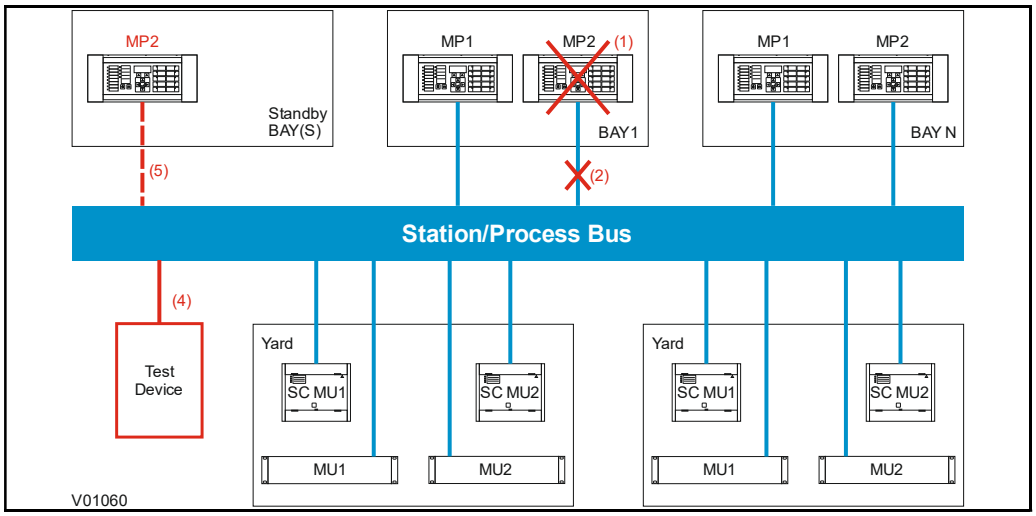

Figure 16: Standby IED Activation Process

The following sequence would occur under this scenario:

1. During the installation phase, a spare standby IED is installed in the substation. This can remain inactive, until it is needed to replace functions in one of several bays. The device is connected to the process bus but does not have any subscriptions enabled.
2. If a failure occurs (in this example, bay 1), first isolate the faulty device by disabling its process bus and station bus interfaces. You do this by turning off the attached network interfaces.
3. Retrieve the configuration that the faulty device normally uses, and load this into the standby redundant IED.
4. Place the IED into the "Test Blocked" mode, as defined in IEC 61850-7-4 Edition Two. This allows test signals to be injected into the network, which will check that the configuration is correct. GOOSE signals issued by the device will be flagged as "test" so that subscribing switchgear controllers know not to trip during this testing. In this way the protection can be tested all the way up to the switchgear control merging units without having to operate primary circuit breakers, or by carrying out any secondary injection.
5. Take the standby IED out of "Test-Blocked" mode and activate it so that it now replaces the protection functions that were disabled from the initial device failure.

The standby IED reduces downtime in the case of device failure, as protection functions can be restored quickly before the faulted device is replaced.

8. READ ONLY MODE

With IEC 61850 and Ethernet/Internet communication capabilities, security has become an important issue. For this reason, all relevant GE Vernova IEDs have been adapted to comply with the latest cyber-security standards.

In addition to this, a facility is provided which allows you to enable or disable the communication interfaces. This feature is available for products using Courier, IEC 60870-5-103, or IEC 61850.

8.1 IEC 60870-5-103 Protocol Blocking

If Read-Only Mode is enabled for RP1 or RP2 with IEC 60870-5-103, the following commands are blocked at the interface:

- INF16 auto-recloser on/off (ASDU20)
- INF17 teleprotection on/off (ASDU20)
- INF18 protection on/off (ASDU20)
- INF19 LED reset (ASDU20)
- private INFs e.g. CB open/close, Control Inputs (ASDU20)

The following commands are still allowed:

- Poll Class 1 (Read spontaneous events)
- Poll Class 2 (Read measurands)
- GI sequence (ASDU7 'Start GI', Poll Class 1)
- Transmission of Disturbance Records sequence (ASDU24, ASDU25, Poll Class 1)
- Time Synchronization (ASDU6)
- General Commands (ASDU20), namely:
  - INF23 activate characteristic 1
  - INF24 activate characteristic 2
  - INF25 activate characteristic 3
  - INF26 activate characteristic 4

Note: For IEC 60870-5-103, Read Only Mode function is different from the existing Command block feature.

8.2 Courier Protocol Blocking

If Read-Only Mode is enabled for RP1 or RP2 with Courier, the following commands are blocked at the interface:

- All setting changes
- Reset Indication (Trip LED) command
- Operate Control Input commands
- CB operation commands
- Auto-reclose operation commands
- Reset demands/thermal etc... command
- Clear event/fault/maintenance/disturbance record commands
- Test LEDs & contacts commands

The following commands are still allowed:

- Read settings, statuses, measurands
- Read records (event, fault, disturbance)
- Time Synchronization
- Change active setting group

8.3 IEC 61850 Protocol Blocking

If Read-Only Mode is enabled for the Ethernet interfacing with IEC 61850, the following commands are blocked at the interface:

- All controls, including:
  - Enable/disable protection
  - Operate Control Inputs
  - CB operations (Close/Trip, Lock)
  - Reset LEDs

The following commands are still allowed:

- Read statuses, measurands
- Generate reports
- Extract disturbance records
- Time synchronization
- Change active setting group

8.4 Read-Only Settings

The following settings are available for enabling or disabling Read Only Mode.

- RP1 Read Only
- RP2 Read Only (only for products that have RP2)
- NIC Read Only (where Ethernet is available)

8.5 Read-Only DDB Signals

The remote read only mode is also available in the PSL using three dedicated DDB signals:

- RP1 Read Only
- RP2 Read Only (only for products that have RP2)
- NIC Read Only (where Ethernet is available)

Using the PSL, these signals can be activated by opto-inputs, Control Inputs and function keys if required.

9. TIME SYNCHRONIZATION

In modern protection schemes it is necessary to synchronize the IED's real time clock so that events from different devices can be time stamped and placed in chronological order. This is achieved in various ways depending on the chosen options and communication protocols.

- Using the IRIG-B input (if fitted)
- Using the SNTP time protocol (for Ethernet IEC 61850 versions + DNP3 OE)
- By using the time synchronization functionality inherent in the data protocols

9.1 Demodulated IRIG-B

IRIG stands for Inter Range Instrumentation Group, which is a standards body responsible for standardizing different time code formats. There are several different formats starting with IRIG-A, followed by IRIG-B and so on. The letter after the "IRIG" specifies the resolution of the time signal in pulses per second (PPS). IRIG-B, the one which we use has a resolution of 100 PPS. IRIG-B is used when accurate time-stamping is required.

The following diagram shows a typical GPS time-synchronized substation application. The satellite RF signal is picked up by a satellite dish and passed on to receiver. The receiver receives the signal and converts it into time signal suitable for the substation network. IEDs in the substation use this signal to govern their internal clocks and event recorders.

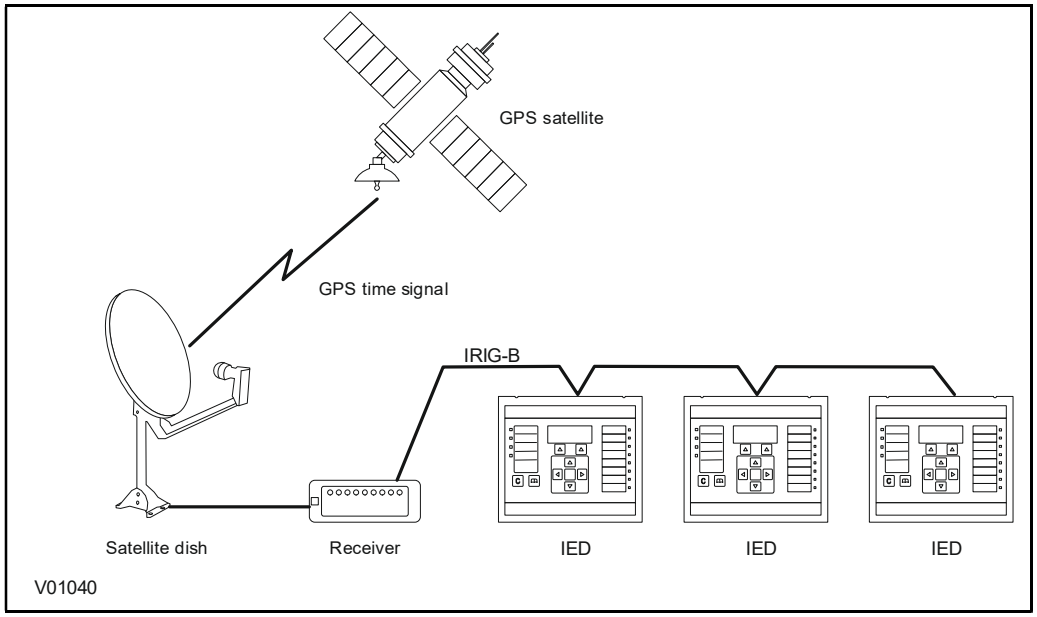

Figure 17: GPS Satellite Timing Signal

The IRIG-B time code signal is a sequence of one second time frames. Each frame is split up into ten 100 mS slots as follows:

- Time-slot 1: Seconds
- Time-slot 2: Minutes
- Time-slot 3: Hours
- Time-slot 4: Days
- Time-slot 5 and 6: Control functions
- Time-slots 7 to 10: Straight binary time of day

The first four time-slots define the time in BCD (Binary Coded Decimal). Time-slots 5 and 6 are used for control functions, which control deletion commands and allow different data groupings within the synchronization strings. Time-slots 7-10 define the time in SBS (Straight Binary Second of day).

9.1.1 IRIG-B Implementation

Depending on the chosen hardware options, the product can be equipped with an IRIG-B input for time synchronization purposes. The IRIG-B interface is implemented either on a dedicated card, or together with other communication functionality such as Ethernet. The IRIG-B connection is presented by a connector is a BNC connector. IRIG-B signals are usually presented as an RF-modulated signal. There are two types of input to our IRIG-B boards: demodulated or modulated. A board that accepts a demodulated input is used where the IRIG-B signal has already been demodulated by another device before being fed to the IED. A board that accepts a modulated input has an on-board demodulator.

To set the device to use IRIG-B, use the setting **IRIG-B Sync** cell in the **DATE AND TIME** column.

The IRIG-B status can be viewed in the **IRIG-B Status** cell in the **DATE AND TIME** column.

9.2 SNTP

SNTP is used to synchronize the clocks of computer systems over packet-switched, variable-latency data networks, such as IP. SNTP can be used as the time synchronization method for models using IEC 61850 over Ethernet.

The device is synchronized by the main SNTP server. This is achieved by entering the IP address of the SNTP server into the IED using the IEC 61850 Configurator software described in the settings application software manual. A second server is also configured with a different IP address for backup purposes.

This function issues an alarm when there is a loss of time synchronization on the SNTP server. This could be because there is no response or no valid clock signal.

The HMI menu does not contain any configurable settings relating to SNTP, as the only way to configure it is using the IEC 61850 Configurator. However, it is possible to view some parameters in the **COMMUNICATIONS** column under the sub-heading SNTP parameters. Here you can view the SNTP server addresses and the **SNTP poll rate** in the cells **SNTP Server 1**, **SNTP Server 2** and **SNTP Poll rate** respectively.

The SNTP time synchronization status is displayed in the **SNTP Status** cell in the **DATE AND TIME** column.

9.2.1 Loss of SNTP Server Signal Alarm

This function issues an alarm when there is a loss of time synchronization on the SNTP server. It is issued when the SNTP server has not detected a valid time synchronization response within its 5 second window. This is because there is no response or no valid clock. The alarm is mapped to IEC 61850.

9.3 IEEE 1588 Precision Time Protocol

The MiCOM P40 modular products support the IEEE C37.238 (Power Profile) of IEEE 1588 Precision Time Protocol (PTP) as a slave-only clock. This can be used to replace or supplement IRIG-B and SNTP time synchronization so that the IED can be synchronized using Ethernet messages from the substation LAN without any additional physical connections being required.

A dedicated DDB signal (**PTP Failure**) is provided to indicate failure of failure of PTP.

9.3.1 Accuracy and Delay Calculation

A time synchronization accuracy of within 5 ms is possible. Both peer-to-peer or end-to-end mode delay measurement can be used.

In peer-to-peer mode, delays are measured between each link in the network and are compensated for. This provides greater accuracy but requires that every device between the Grand Master and Slaves supports the peer-to-peer delay measurement.

In end-to-end mode, delays are only measured between each Grand Master and Slave. The advantage of this mode is that the requirements for the switches on the network are lower; they do not need to independently calculate delays. The main disadvantage is that more inaccuracy is introduced, because the method assumes that forward and reverse delays are always the same, which may not always be correct.

When using end-to-end mode, the IED can be connected in a ring or line topology using RSTP or Self Healing Protocol without any additional Transparent Clocks. But because the IED is a slave-only device, additional inaccuracy is introduced. The additional error will be less than 1ms for a network of eight devices.

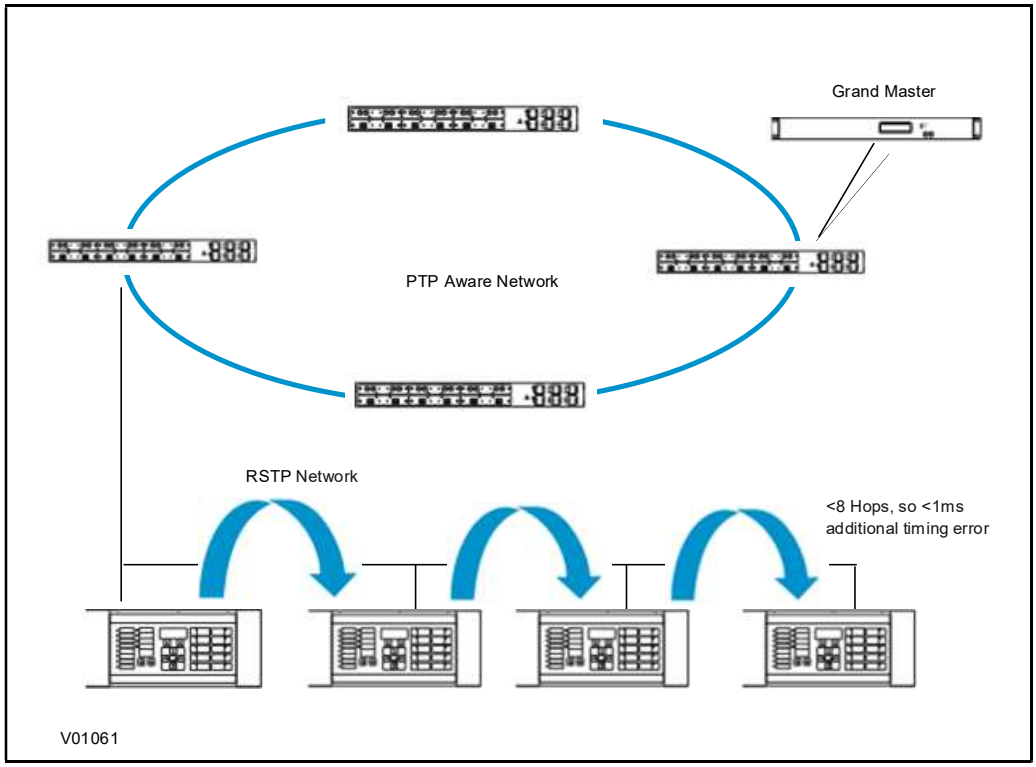

Figure 18: Timing Error using Ring or Line Topology

9.3.2 PTP Domains

PTP traffic can be segregated into different domains using Boundary Clocks. These allow different PTP clocks to share the same network while maintaining independent synchronization within each grouped set.

9.4 Time Synchronization using the Communication Protocols

All communication protocols have in-built time synchronization mechanisms. If an external time synchronization mechanism such as IRIG-B, SNTP, or IEEE 1588 PTP is not used to synchronize the devices, the time synchronization mechanism within the relevant serial protocol is used. The real time is usually defined in the master station and communicated to the relevant IEDs via one of the rear serial ports using the chosen protocol. It is also possible to define the time locally using settings in the **DATE AND TIME** column.

The time synchronization for each protocol is described in the relevant protocol description section.

SYMBOLS AND GLOSSARY

Logic Symbols used

Symbols	Explanation
&	**Logical "AND":** Used in logic diagrams to show an AND-gate function.
Σ	**"Sigma":** Used to indicate a summation, such as cumulative current interrupted.
τ	**"Tau":** Used to indicate a time constant, often associated with thermal characteristics.
<	**Less than:** Used to indicate an "under" threshold, such as undercurrent (current dropout).
>	**Greater than:** Used to indicate an "over" threshold, such as overcurrent (current overload).
1	**Logical "OR":** Used in logic diagrams to show an OR-gate function.
50BF	**Breaker failure protection**
52a	**A circuit breaker closed auxiliary contact:** The contact is in the same state as the breaker primary contacts.
52b	**A circuit breaker open auxiliary contact:** The contact is in the opposite state to the breaker primary contacts.
87BB	**Differential busbar protection**
87BBN	**Phase differential busbar**
87BBP	**Neutral differential busbar**
89a	**An isolator closed auxiliary contact:** The contact is in the same state as the breaker primary contacts.
89b	**An isolator open auxiliary contact:** The contact is in the opposite state to the breaker primary contacts.
ACSI	**Abstract Communication Service Interface:** In IEC 61850, the ACSI provides abstract definitions of a hierarchical data model and the services that operate on the data.
BAR	Block auto-reclose signal.
BN>	**Neutral over susceptance protection element:** Reactive component of admittance calculation from neutral current and residual voltage.
BU	**Backup:** Typically, a back-up protection element.
C/O	**A changeover contact having normally closed and normally open connections:** Often called a "form C" contact.
CB	Circuit breaker.
CB Aux.	**Circuit breaker auxiliary contacts:** Indication of the breaker open/closed status.
CBF	Circuit breaker failure protection.
CLP	Cold load pick-up.
CS	Check synchronism.
CT	Current transformer.

Symbols	Explanation
CTRL.	**Abbreviation of "Control":** As used for the Control Inputs function.
CTS	**Current transformer supervision:** To detect CT input failure.
CU	Abbreviation of "Central Unit" (P741)
CZ	**Abbreviation of "Check Zone":** Zone taking into account only the feeders.
DDB	**Digital data bus within the programmable scheme logic:** A logic point that has a zero or 1 status. DDB signals are mapped in logic to customize the relay's operation.
DEF	**Directional earth fault protection:** A directional ground fault aided scheme.
Df/dt	Rate of change of frequency protection (ROCOF).
Dly	Time delay.
DHP	Dual Homing Protocol
DR	Abbreviation of "Disturbance Record"
DST	**Daylight Saving Time**
DT	**Abbreviation of "Definite Time":** An element which always responds with the same constant time delay on operation.
DZ	**Abbreviation of "Dead Zone":** Area between a CT and an open breaker or an open isolator.
E/F	**Earth fault:** Directly equivalent to ground fault.
FLC	**Full load current:** The nominal rated current for the circuit.
Flt.	**Abbreviation of "Fault":** Typically used to indicate faulted phase selection.
FN	Function.
Fwd.	Indicates an element responding to a flow in the "Forward" direction.
F>	**An overfrequency element:** Could be labelled 81O in ANSI terminology.
F<	**An underfrequency element:** Could be labelled 81U in ANSI terminology.
GN>	**Neutral over conductance protection element:** Real component of admittance calculation from neutral current and residual voltage.
Gnd.	**Abbreviation of "Ground":** Used in distance settings to identify settings that relate to ground (earth) faults.
GoENa	**GOOSE Enable**
GOOSE	**Generic Object Oriented Substation Event:** In IEC 61850, a specific definition of a type of generic substation event, for peer-peer communication.
GRP.	**Abbreviation of "Group":** Typically, an alternative setting group.

Symbols	Explanation
GSE	**Generic Substation Event:** In IEC 61850, the generic substation event model provides the possibility for a fast and reliable system-wide distribution of input and output data values (peer-peer communication).
HMI	**Human Machine Interface:** The graphical user interface of the control system.
I	Current.
I^	**Current raised to a power:** Such as when breaker statistics monitor the square of ruptured current squared (^ power = 2).
I/O	**Abbreviation of "Inputs and Outputs":** Used in connection with the number of optocoupled inputs and output contacts within the relay.
I/P	Abbreviation of "Input".
I<	**An undercurrent element:** Responds to current dropout.
I>	**An overcurrent element:** Detects phase faults; Optionally used by the 50BF protection.
I>1	**First stage of phase overcurrent protection:** Could be labelled 51-1 in ANSI terminology.
I>2	**Second stage of phase overcurrent protection:** Could be labelled 51-2 in ANSI terminology.
I>3	**Third stage of phase overcurrent protection:** Could be labelled 51-3 in ANSI terminology.
I>4	**Fourth stage of phase overcurrent protection:** Could be labelled 51-4 in ANSI terminology.
I>BB	Minimum pick-up phase threshold for the local trip order confirmation.
I>DZ	Minimum pick-up phase threshold for the Dead Zone protection.
I_0	**Zero sequence current:** Equals one third of the measured neutral/residual current.
I_1	Positive sequence current.
I_2	Negative sequence current.
IA	**Phase A current:** Might be phase L1, red phase. or other, in customer terminology.
IB	**Phase B current:** Might be phase L2, yellow phase. or other, in customer terminology.
IbiasPh> Cur.	SDEF blocking bias current threshold.
IC	**Phase C current:** Might be phase L3, blue phase. or other, in customer terminology.
ID	**Abbreviation of "Identifier":** Often a label used to track a software version installed.
ID>1	Minimum pick-up phase circuitry fault threshold.
ID>2	Minimum pick-up differential phase element for all the zones.
IDCZ>2	Minimum pick-up differential phase element for the Check Zone.

Symbols	Explanation
IDMT	**Inverse Definite Minimum Time:** A characteristic whose trip time depends on the measured input (e.g. current) according to an inverse-time curve.
IDN>1	Minimum pick-up neutral circuitry fault threshold.
IDN>2	Minimum pick-up differential neutral element for all the zones.
IDNCZ>2	Minimum pick-up differential neutral element for the Check Zone.
IDZ	Minimum pick-up differential neutral element for the Check Zone.
IED	**Intelligent Electronic Device:** For example, a MiCOM relay
In	**The rated nominal current of the relay:** Software selectable as 1 amp or 5 amps to match the line CT input.
IN	**Neutral current, or residual current:** This results from an internal summation of the three measured phase currents.
IN>	**A neutral (residual) overcurrent element:** Detects earth/ground faults.
IN>1	**First stage of ground overcurrent protection:** Could be labelled 51N-1 in ANSI terminology.
IN>2	**Second stage of ground overcurrent protection:** Could be labelled 51N-2 in ANSI terminology.
IN>BB	Minimum pick-up neutral threshold for the local trip order confirmation.
IN>DZ	Minimum pick-up neutral threshold for the Dead Zone protection.
Inh	An inhibit signal.
Inst.	**An element with "instantaneous" operation:** i.e. having no deliberate time delay.
ISEF>	Sensitive earth fault overcurrent element.
K1	Slope of the phase circuitry fault function.
K2	Slope of the differential phase element for all the zones.
KCZ	Slope of the differential phase element for the Check Zone.
KN1	Slope of the neutral circuitry fault function.
KN2	Slope of the differential neutral element for all the zones.
KNCZ	Slope of the differential neutral element for the Check Zone.
KZN	**The residual compensation factor:** Ensuring correct reach for ground distance elements.
LCD	**Liquid Crystal Display:** The front-panel text display on the relay.
LD	**Abbreviation of "Level Detector":** An element responding to a current or voltage below its set threshold.
LED	**Light Emitting Diode:** **Bicolour:** Red/black or green/black or orange/black indicator on the relay front-panel. **Tricolour:** Red/orange/green/black indicator on the relay front-panel.
MCB	**A "Miniature Circuit Breaker":** Used instead of a fuse to protect VT secondary circuits.

Symbols	Explanation
MICS	**Model Implementation Conformance Specification:** Defines the IEC 61850 data model implemented in an IED.
MMS	**Manufacturing Message Specification:** A protocol used to transport the data of IEC 61850 across an Ethernet network.
N	**Indication of "Neutral" involvement in a fault:** i.e. a ground (earth) fault.
N/A	Not applicable.
N/C	**A normally closed or "break" contact:** Often called a "form B" contact.
N/O	**A normally open or "make" contact:** Often called a "form A" contact.
NIC	**Network Interface Card:** i.e. the Ethernet card of the IED
NPS	**Negative Phase Sequence.**
NVD	**Neutral Voltage Displacement:** Equivalent to residual overvoltage protection.
NXT	**Abbreviation of "Next":** In connection with hotkey menu navigation.
o	**A small circle on the input or output of a logic gate:** Indicates a NOT (invert) function.
O/P	Abbreviation of "output".
Opto	**An optocoupled logic input:** Alternative terminology: binary input.
P1	**Used in IEC terminology to identify the primary CT terminal polarity:** Replace by a dot when using ANSI standards.
P2	**Used in IEC terminology to identify the primary CT terminal polarity:** The non-dot terminal.
PCB	Printed circuit board.
Ph	**Abbreviation of "Phase":** Used in distance settings to identify settings that relate to phase-phase faults.
PICS	**Protocol Implementation Conformance Specification:** Defines the IEC 61850 services implemented in an IED, with reference to the ACSI.
PN>	**Wattmetric earth fault protection:** Calculated using residual voltage and current quantities.
Pol	**Abbreviation of "Polarizing":** Typically, the polarizing voltage used in making directional decisions.
PSL	**Programmable Scheme Logic:** The part of the relay's logic configuration that can be modified by the user, using the graphical editor within S1 software.
PU	Abbreviation of "Peripheral Unit" (P742 or P743)
Qx	Isolator number x (from 1 to 6).
R	A resistance.

Symbols	Explanation
R Gnd.	**A distance zone resistive reach setting:** Used for ground (earth) faults.
RBN	Lead burden for the neutral.
RBPh	Lead burden for the phases.
RCA	**Abbreviation of "Relay Characteristic Angle":** The centre of the directional characteristic.
RCT	Current Transformer secondary resistance.
REF	Restricted earth fault protection.
Rev.	Indicates an element responding to a flow in the "reverse" direction.
RMS	**The equivalent a.c. current:** Taking into account the fundamental, plus the equivalent heating effect of any harmonics. Abbreviation of "root mean square".
RP	**Abbreviation of "Rear Port":** The communication ports on the rear of the relay.
RSTP	Rapid Spanning Tree Protocol
Rx	**Abbreviation of "Receive":** Typically used to indicate a communication receive line/pin.
S1	**Used in IEC terminology to identify the secondary CT terminal polarity:** Replace by a dot when using ANSI standards.
S2	**Used in IEC terminology to identify the secondary CT terminal polarity:** The non-dot terminal.
SCL	**Substation Configuration Language:** In IEC 61850, the definition of the configuration files.
SCSM	**Specific Communication Service Mappings:** In IEC 61850, the SCSMs define the actual information exchange mechanisms currently used (e.g. MMS).
SDEF	Sensitive Differential Earth Fault Protection.
SEF	Sensitive Earth Fault Protection.
SHP	Self Healing Protocol
SSD	Solid State Device
T	A time delay.
TCS	Trip Circuit Supervision.
TD	**The time dial multiplier setting:** Applied to inverse-time curves (ANSI/IEEE).
TE	**A standard for measuring the width of a relay case:** One inch = 5TE units.
TMS	The time multiplier setting applied to inverse-time curves (IEC).
Tx	**Abbreviation of "Transmit":** Typically used to indicate a communication transmit line/pin.
V	Voltage.
V<	An undervoltage element.
V<1	**First stage of undervoltage protection:** Could be labelled 27-1 in ANSI terminology.

Symbols	Explanation
V<2	**Second stage of undervoltage protection:** Could be labelled 27-2 in ANSI terminology.
V>	An overvoltage element.
V>1	**First stage of overvoltage protection:** Could be labelled 59-1 in ANSI terminology.
V>2	**Second stage of overvoltage protection:** Could be labelled 59-2 in ANSI terminology.
V_0	**Zero sequence voltage:** Equals one third of the measured neutral/residual voltage.
V_1	Positive sequence voltage.
V_2	Negative sequence voltage.
V2pol	Negative sequence polarizing voltage.
VA	**Phase A voltage:** Might be phase L1, red phase. or other, in customer terminology.
VB	**Phase B voltage:** Might be phase L2, yellow phase. or other, in customer terminology.
VC	**Phase C voltage:** Might be phase L3, blue phase. or other, in customer terminology.
VCO	Voltage controlled overcurrent element.
Vk	IEC knee point voltage of a current transformer.
Vn	**The rated nominal voltage of the relay:** To match the line VT input.
VN	Neutral voltage displacement or residual voltage.
VN>1	First stage of residual (neutral) overvoltage protection.
VN>2	Second stage of residual (neutral) overvoltage protection.
Vres.	Neutral voltage displacement or residual voltage.
VT	Voltage transformer.
VTS	**Voltage transformer supervision:** To detect VT input failure.
Vx	**An auxiliary supply voltage:** Typically, the substation battery voltage used to power the relay.
YN>	**Neutral overadmittance protection element:** Non-directional neutral admittance protection calculated from neutral current and residual voltage.
Z_0	Zero sequence impedance.
Z_1	Positive sequence impedance.
Z_2	Negative sequence impedance.

Logic Timers

Logic Symbols	Explanation	Time Chart
t / 0	Delay on pick-up timer, t	INPUT OUTPUT (t) INPUT OUTPUT (t)
0 / t	Delay on drop-off timer, t	INPUT OUTPUT (t) INPUT OUTPUT (t)
t1 / t2	Delay on pick-up/drop-off timer	INPUT OUTPUT (t1, t2) INPUT OUTPUT (t1, t2)
t	Pulse timer	INPUT OUTPUT (t) INPUT OUTPUT (t)
t	Pulse pick-up falling edge	INPUT OUTPUT (t)
t	Pulse pick-up raising edge	INPUT OUTPUT (t)
Latching	Latch	INPUT OUTPUT

Logic Symbols	Explanation	Time Chart
Dwell / Timer	Dwell timer	INPUT OUTPUT (t) INPUT OUTPUT (t)
Straight	**Straight (non latching):** Hold value until input reset signal	INPUT OUTPUT

Logic Gates

AND GATE

Symbol

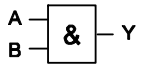

Truth Table

IN		OUT
0	1	0
0	1	0
0	1	0
1	0	0
1	1	1

Symbol

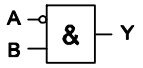

Truth Table

IN		OUT
A	B	Y
0	0	0
0	1	1
1	0	0
1	1	0

Symbol

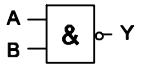

Truth Table

IN		OUT
A	B	Y
0	0	1
0	1	1
1	0	1
1	1	0

OR GATE

Symbol

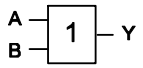

Truth Table

IN		OUT
A	B	Y
0	0	0
0	1	1
1	0	1
1	1	1

Symbol

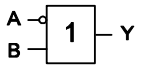

Truth Table

IN		OUT
A	B	Y
0	0	1
0	1	1
1	0	0
1	1	1

Symbol

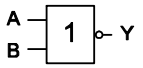

Truth Table

IN		OUT
A	B	Y
0	0	1
0	1	0
1	0	1
1	1	0

R - S FLIP-FLOP

Symbol

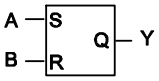

Truth Table

A	B	QN	QN+	Active Mode
0	0			Hold Mode
0	1	0		Hold Mode
		1	0	Reset
1	0	0	1	Set
		1		Hold Mode
0	0	-	-	Inhibit Mode

Symbol

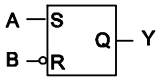

Truth Table

A	B	QN	QN+	Active Mode
0	0	0		Hold Mode
		1	0	Reset
0	1			Hold Mode
1	0	-	-	Inhibit Mode
0	1	0	1	Set
		1		Hold Mode

Symbol

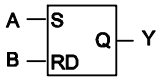

* RD = Reset Dominant

Truth Table

A	B	QN	QN+	Active Mode
0	0			Hold Mode
0	1			0
1	0	0	1	Set
		1		Hold Mode
1	1			0

EXCLUSIVE OR GATE

Symbol

Truth Table

IN		OUT
A	B	Y
0	0	0
0	1	1
1	0	1
1	1	0

Symbol

Truth Table

IN		OUT
A	B	Y
0	0	1
0	1	0
1	0	0
1	1	1

Symbol

Truth Table

IN		OUT
A	B	Y
0	0	1
0	1	0
1	0	0
1	1	1

MULTI INPUT GATE

Symbol

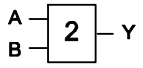

Truth Table

IN		OUT
A	B	Y
0	0	0
0	1	0
1	0	0
1	1	1

Symbol

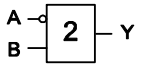

Truth Table

IN		OUT
A	B	Y
0	0	0
0	1	1
1	0	0
1	1	0

Symbol

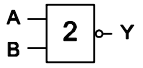

Truth Table

IN		OUT
A	B	Y
0	0	1
0	1	1
1	0	1
1	1	0

NOT GATE

Symbol

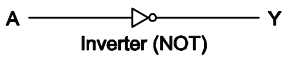

Truth Table

IN	OUT
A	Y
0	1
1	0

INSTALLATION

CONTENTS

1.	**HANDLING THE GOODS**	**3**
1.1	Receipt of the Goods	3
1.2	Unpacking the Goods	3
1.3	Storing the Goods	3
1.4	Dismantling the Goods	3
2.	**MOUNTING THE DEVICE**	**4**
2.1	Flush Panel Mounting	4
2.2	Rack Mounting	4
3.	**CABLES AND CONNECTIONS**	**6**
3.1	Terminal Blocks	6
3.2	Power Supply Connections	7
3.3	Earth Connection	7
3.4	Current Transformers	7
3.5	Voltage Transformer Connections	7
3.6	EIA(RS)485 and K-BUS Connections	7
3.7	IRIG-B Connection (P741 only)	8
3.8	Opto-Input Connections	8
3.9	Output Relay Connections	8
3.10	Ethernet Metallic Connections	8
3.11	Ethernet Fibre Connections (if applicable)	9
3.12	USB Connection	9
4.	**EXTERNAL CONNECTION DIAGRAMS**	**10**

1. HANDLING THE GOODS

Our products are of robust construction but require careful treatment before installation on site. This section discusses the requirements for receiving and unpacking the goods, as well as associated considerations regarding product care and personal safety.

Before lifting or moving the equipment you should be familiar with the Safety Information chapter of this manual.

1.1 Receipt of the Goods

On receipt, ensure the correct product has been delivered. Unpack the product immediately to ensure there has been no external damage in transit. If the product has been damaged, make a claim to the transport contractor and notify us promptly.

For products not intended for immediate installation, repack them in their original delivery packaging.

1.2 Unpacking the Goods

When unpacking and installing the product, take care not to damage any of the parts and make sure that additional components are not accidentally left in the packing or lost. Do not discard any CDROMs or technical documentation. These should accompany the unit to its destination substation and be stored in a dedicated place.

The site should be well lit to aid inspection, clean, dry and reasonably free from dust and excessive vibration. This particularly applies where installation is being carried out at the same time as construction work.

1.3 Storing the Goods

If the unit is not installed immediately, store it in a place free from dust and moisture in its original packaging. Keep any de-humidifier bags included in the packing. The de-humidifier crystals lose their efficiency if the bag is exposed to ambient conditions. Restore the crystals before replacing them in the carton. Ideally regeneration should be carried out in a ventilating, circulating oven at about 115°C. Bags should be placed on flat racks and spaced to allow circulation around them. The time taken for regeneration will depend on the size of the bag. If a ventilating, circulating oven is not available, when using an ordinary oven, open the door on a regular basis to let out the steam given off by the regenerating silica gel.

On subsequent unpacking, make sure that any dust on the carton does not fall inside. Avoid storing in locations of high humidity. In locations of high humidity, the packaging may become impregnated with moisture and the de-humidifier crystals will lose their efficiency.

The device can be stored between –25º to +70ºC for unlimited periods or between -40°C to + 85°C for up to 96 hours (see technical specifications).

Note: Make sure you power up units that are stored in a de-energized state once a year, for one hour continuously. This prevents deterioration of electrolytic capacitors.

1.4 Dismantling the Goods

If you need to dismantle the device, always observe standard ESD (Electrostatic Discharge) precautions. The minimum precautions to be followed are as follows:

- Use an antistatic wrist band earthed to a suitable earthing point.
- Avoid touching the electronic components and PCBs.

2. MOUNTING THE DEVICE

The products are dispatched either individually or as part of a panel or rack assembly.

Individual products are normally supplied with an outline diagram showing the dimensions for panel cut-outs and hole centres.

The products are designed so the fixing holes in the mounting flanges are only accessible when the access covers are open.

If you use a P991 or MMLG test block with the product, when viewed from the front, position the test block on the right-hand side of the associated product. This minimizes the wiring between the product and test block and allows the correct test block to be easily identified during commissioning and maintenance tests.

2.1 Flush Panel Mounting

Panel-mounted devices are flush mounted into panels using M4 SEMS Taptite self-tapping screws with captive 3 mm thick washers (also known as a SEMS unit).

Do not use conventional self-tapping screws, because they have larger heads and could damage the faceplate.

Alternatively, you can use tapped holes if the panel has a minimum thickness of 2.5 mm.

For applications where the product needs to be semi-projection or projection mounted, a range of collars are available.

If several products are mounted in a single cut-out in the panel, mechanically group them horizontally or vertically into rigid assemblies before mounting in the panel.

Do not fasten products with pop rivets because this makes them difficult to remove if repair becomes necessary.

2.2 Rack Mounting

Panel-mounted variants can also be rack mounted using single-tier rack frames (our part number FX0021 101), as shown in the figure below. These frames are designed with dimensions in accordance with IEC 60297 and are supplied pre-assembled ready to use. On a standard 483 mm (19 inch) rack this enables combinations of case widths up to a total equivalent of size 80TE to be mounted side by side.

The two horizontal rails of the rack frame have holes drilled at approximately 26 mm intervals. Attach the products by their mounting flanges using M4 Taptite self-tapping screws with captive 3 mm thick washers (also known as a SEMS unit).

Risk of damage to the front cover molding. Do not use conventional self-tapping screws, including those supplied for mounting MiDOS products because they have slightly larger heads.

Once the tier is complete, the frames are fastened into the racks using mounting angles at each end of the tier.

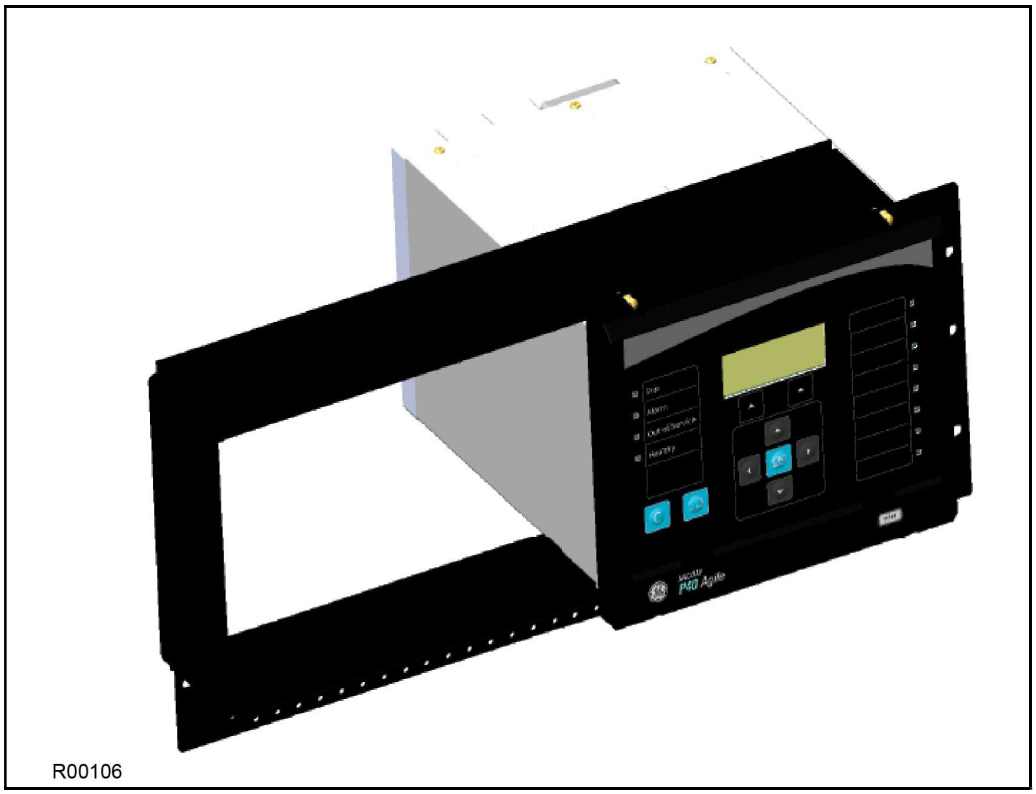

Figure 1: Rack Mounting of Products

Products can be mechanically grouped into single tier (4U) or multi-tier arrangements using the rack frame. This enables schemes using products from different product ranges to be pre-wired together before mounting.

Use blanking plates to fill any empty spaces. The spaces may be used for installing future products or because the total size is less than 80TE on any tier. Blanking plates can also be used to mount ancillary components. The part numbers are as follows:

Case Size Summation	Blanking Plate Part Number
05TE	GJ2028 001
10TE	GJ2028 002
15TE	GJ2028 003
20TE	GJ2028 004
25TE	GJ2028 005
30TE	GJ2028 006
35TE	GJ2028 007
40TE	GJ2028 008
60TE	GJ2028 012
80TE	GJ2028 016

3. CABLES AND CONNECTIONS

This section describes the type of wiring and connections that should be used when installing the device.

Before carrying out any work on the equipment you should be familiar with the Safety Section and the ratings on the equipment's rating label.

3.1 Terminal Blocks

The device may use one or more of the terminal block types shown in the following diagram. The terminal blocks are fastened to the rear panel with screws.

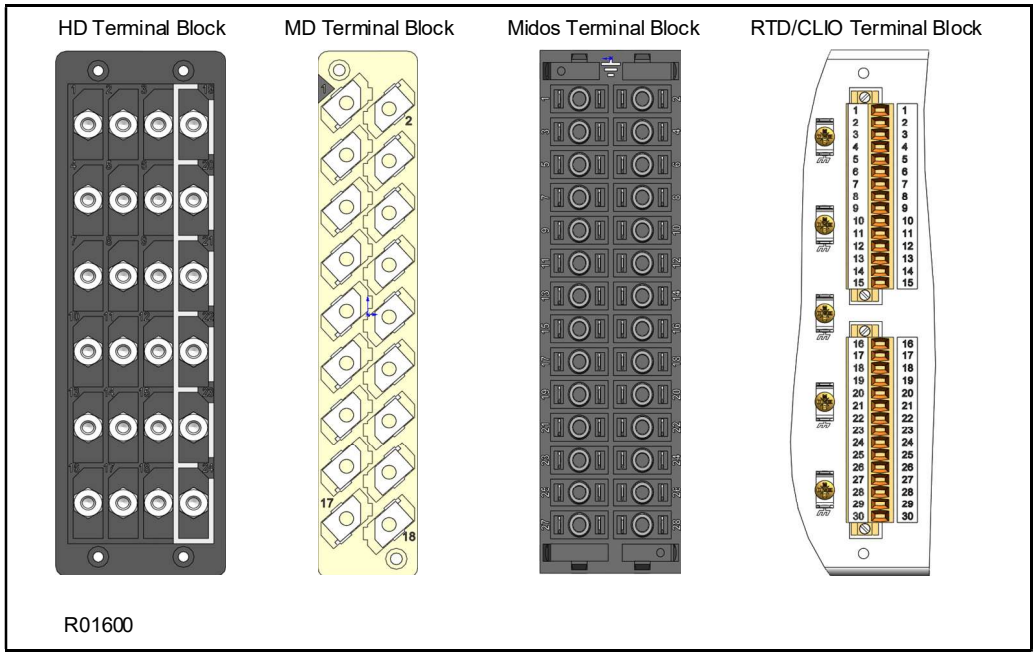

Figure 2: Terminal Block Types

MiCOM products are supplied with sufficient M4 screws for making connections to the rear mounted terminal blocks using ring terminals, with a recommended maximum of two ring terminals per terminal.

If required, M4 90° crimp ring terminals can be supplied in three different sizes depending on wire size. Each type is available in bags of 100.

Part Number	Wire Size	Insulation Color
ZB9124 901	0.25 - 1.65 mm^2 (22 - 16 AWG)	Red
ZB9124 900	1.04 - 2.63 mm^2 (16 - 14 AWG)	Blue

Note: IP2x shields, and side cover panels may be fitted to provide IP20 ingress protection for MiCOM terminal blocks. The shields and covers can be attached during installation or retrofitted to upgrade existing installations. The shields are supplied with four language fitting instructions, publication number: IP2x-TM-4L-n (where n is the current issue number). For more information, contact your local sales office or our worldwide contact centre at GAsupport@gevernova.com

3.2 Power Supply Connections

These should be wired with 1.5 mm PVC insulated multi-stranded copper wire terminated with M4 ring terminals.

The wire should have a minimum voltage rating of 300 V RMS.

Protect the auxiliary power supply wiring with a maximum 16 A high rupture capacity (HRC) type NIT or TIA fuse

3.3 Earth Connection

Every device must be connected to the cubicle earthing bar using the M4 earth terminal.

Use a wire size of at least 2.5 mm^2 terminated with a ring terminal.

Due to the physical limitations of the ring terminal, the maximum wire size you can use is 6.0 mm^2 using ring terminals that are not pre-insulated. If using pre insulated ring terminals, the maximum wire size is reduced to 2.63mm^2 per ring terminal. If you need a greater cross-sectional area, use two wires in parallel, each terminated in a separate ring terminal.

The wire should have a minimum voltage rating of 300 V RMS.

Note: To prevent any possibility of electrolytic action between brass or copper ground conductors and the rear panel of the product, precautions should be taken to isolate them from one another. This could be achieved in several ways, including placing a nickel-plated or insulating washer between the conductor and the product case, or using tinned ring terminals.

3.4 Current Transformers

Current transformers would generally be wired with 2.5 mm^2 PVC insulated multi-stranded copper wire terminated with M4 ring terminals.

Due to the physical limitations of the ring terminal, the maximum wire size you can use is 6.0 mm^2 using ring terminals that are not pre-insulated. If using pre insulated ring terminals, the maximum wire size is reduced to 2.63 mm^2 per ring terminal. If you need a greater cross-sectional area, use two wires in parallel, each terminated in a separate ring terminal.

The wire should have a minimum voltage rating of 300 V RMS.

Current transformer circuits must never be fused.

Note: If there are CTs present, spring-loaded shorting contacts ensure that the terminals into which the CTs connect are shorted before the CT contacts are broken.

Note: For 5A CT secondaries, we recommend using 2 x 2.5 mm2 PVC insulated multi-stranded copper wire.

3.5 Voltage Transformer Connections

Voltage transformers should be wired with 2.5 mm2 PVC insulated multi-stranded copper wire terminated with M4 ring terminals.

The wire should have a minimum voltage rating of 300 V RMS.

3.6 EIA(RS)485 and K-BUS Connections

For connecting the EIA(RS485)/K-Bus ports, use 2-core screened cable with a maximum total length of 1000 m or 200 nF total cable capacitance.

To guarantee the performance specifications, you must ensure continuity of the screen, when daisy chaining the connections.

Two-core screened twisted pair cable should be used. It is important to avoid circulating currents, which can cause noise and interference, especially when the cable runs between buildings. For this reason, the screen should be continuous and connected to ground at one end only, normally at the master connection point.

The K-Bus signal is a differential signal and there is no signal ground connection. If a signal ground connection is present in the bus cable, then it must be ignored. At no stage should this be connected to the cable's screen or to the product's chassis. This is for both safety and noise reasons.

A typical cable specification would be:

- Each core: 16/0.2 mm^2 copper conductors, PVC insulated
- Nominal conductor area: 0.5 mm^2 per core
- Screen: Overall braid, PVC sheathed

3.7 IRIG-B Connection (P741 only)

The IRIG-B input and BNC connector have a characteristic impedance of 50Ω. It is recommended that connections between the IRIG-B equipment and the relay are made using coaxial cable of type RG59LSF with a halogen free, fire retardant sheath.

3.8 Opto-Input Connections

These should be wired with 1 mm^2 PVC insulated multi-stranded copper wire terminated with M4 ring terminals.

Each opto-input has a selectable preset ½ cycle filter. This makes the input immune to noise induced on the wiring. This can, however, slow down the response. If you need to switch off the ½ cycle filter, either use double pole switching on the input, or screened twisted cable on the input circuit.

Protect the opto-inputs and their wiring with a maximum 16 A high rupture capacity (HRC) type NIT or TIA fuse.

3.9 Output Relay Connections

These should be wired with 1 mm^2 PVC insulated multi-stranded copper wire terminated with M4 ring terminals.

3.10 Ethernet Metallic Connections

If the device has a metallic Ethernet connection, it can be connected to a 100Base-TX Ethernet hub. Due to noise sensitivity, we recommend this type of connection only for short distance connections, ideally where the products and hubs are in the same cubicle. For increased noise immunity, CAT 6 (category 6) STP (shielded twisted pair) cable and connectors can be used.

The connector for the Ethernet port is a shielded RJ-45. The pin-out is as follows:

Pin	Signal Name	Signal Definition
1	TXP	Transmit (positive)
2	TXN	Transmit (negative)
3	RXP	Receive (positive)
4	-	Not used
5	-	Not used
6	RXN	Receive (negative)
7	-	Not used
8	-	Not used

3.11 Ethernet Fibre Connections (if applicable)

We recommend the use of fibre-optic connections for permanent connections in a substation environment. The 100 Mbps fibre optic port uses type ST or LC connectors depending on the order option (one for Tx and one for Rx), compatible with 50/125 µm or 62.5/125 µm multimode fibres at 1300 nm wavelength.

Note: For models equipped with redundant Ethernet connections the product must be partially dismantled to set the fourth octet of the second IP address. Ideally this should be done before installation.

3.12 USB Connection

The IED has a type B USB socket inside the bottom compartment. A standard USB printer cable (type A one end, type B the other end) can be used to connect a local PC to the IED. This cable is the same as that used for connecting a printer to a PC.

4. EXTERNAL CONNECTION DIAGRAMS

Refer to Appendix C to see the full list of wiring and final assembly diagrams.

CYBERSECURITY

CONTENTS

1.	**OVERVIEW**	**3**
2.	**THE NEED FOR CYBER SECURITY**	**4**
3.	**STANDARDS**	**5**
3.1	**NERC Compliance**	**5**
3.1.1	CIP 002	6
3.1.2	CIP 003	6
3.1.3	CIP 004	6
3.1.4	CIP 005	6
3.1.5	CIP 006	7
3.1.6	CIP 007	7
3.1.7	CIP 008	7
3.1.8	CIP 009	7
3.2	**IEEE 1686-2007**	**8**
4.	**CYBER SECURITY IMPLEMENTATION**	**9**
4.1	**Initial Setup**	**9**
5.	**ROLES AND PERMISSIONS**	**10**
5.1	**Roles**	**10**
5.2	**Permissions**	**11**
6.	**AUTHENTICATION**	**14**
6.1	**Authentication Methods**	**14**
6.2	**Bypass**	**14**
6.3	**Login**	**15**
6.3.1	Front Panel Login	15
6.3.2	MiCOM S1 Login	16
6.3.3	Warning Banner	16
6.3.4	Login Failed	16
6.4	**User Sessions**	**16**
6.5	**User Locking Policy**	**17**
6.6	**Logout**	**18**
6.6.1	Front Panel Logout	18
6.6.2	MiCOM S1 Logout	19
6.7	**Device Users**	**19**
6.8	**Password Policy**	**19**
6.9	**Change Password**	**20**
6.10	**RADIUS**	**20**

6.10.1 RADIUS Users 20
6.10.2 RADIUS Client 20
6.10.3 RADIUS Server Settings 21
6.10.4 RADIUS Accounting 21
6.10.5 RADIUS Client-Server Validation 22
6.11 Recovery 22
6.11.1 Restore to Local Factory Default 22
6.11.2 Password Reset Procedure 22
6.11.3 Access Level DDBs 24
6.12 Disabling Physical Ports 24
6.13 Disabling Logical Ports 24

7. SECURITY EVENT MANAGEMENT 26
7.1 Security Events: Courier 26
7.2 Syslog 27
7.3 Syslog Client 28
7.4 Syslog Functionality 29

1. OVERVIEW

In the past, substation networks were traditionally isolated, and the protocols and data formats used to transfer information between devices were more often than not proprietary.

For these reasons, the substation environment was very secure against cyber attacks. The terms used for this inherent type of security are:

- Security by isolation (if the substation network is not connected to the outside world, it can't be accessed from the outside world).
- Security by obscurity (if the formats and protocols are proprietary, it is very difficult to interpret them.

The increasing sophistication of protection schemes coupled with the advancement of technology and the desire for vendor interoperability has resulted in standardization of networks and data interchange within substations. Today, devices within substations use standardized protocols for communication. Furthermore, substations can be interconnected with open networks, such as the internet or corporate-wide networks, which use standardized protocols for communication. This introduces a major security risk, making the grid vulnerable to cyber-attacks, which could in turn lead to major electrical outages.

Clearly, there is now a need to secure communication and equipment within substation environments. This chapter describes the security measures that have been put in place for GE's range of Intelligent Electronic Devices (IEDs).

2. THE NEED FOR CYBER SECURITY

Cyber-security provides protection against unauthorized disclosure, transfer, modification, or destruction of information and/or information systems, whether accidental or intentional. To achieve this, there are several security requirements:

- Confidentiality (preventing unauthorized access to information)
- Integrity (preventing unauthorized modification)
- Availability/Authentication (preventing the denial of service and assuring authorized access to information)
- Non-Repudiation (preventing the denial of an action that took place)
- Traceability/Detection (monitoring and logging of activity to detect intrusion and analyze incidents)

The threats to cyber security may be unintentional (e.g. natural disasters, human error), or intentional (e.g. cyber attacks by hackers).

Good cyber security can be achieved with a range of measures, such as closing down vulnerability loopholes, implementing adequate security processes and procedures and providing technology to help achieve this.

Examples of vulnerabilities are:

- Indiscretions by personnel (e.g. users keep passwords on their computer)
- Bypassing of controls (e.g. users turn off security measures)
- Bad practice (users do not change default passwords, or everyone uses the same password to access all substation equipment)
- Inadequate technology (e.g. substation is not firewalled)

Examples of availability issues are:

Equipment overload, resulting in reduced or no performance

- Expiry of a certificate prevents access to equipment.

To help tackle these issues, standards organizations have produced various standards, by which compliance significantly reduces the threats associated with lack of cyber security.

3. STANDARDS

There are several standards which apply to substation cyber security.

	Country	
NERC CIP (North American Electric Reliability Corporation)	USA	Framework for the protection of the grid critical Cyber Assets
BDEW (German Association of Energy and Water Industries)	Germany	Requirements for Secure Control and Telecommunication Systems
ANSI ISA 99	USA	ICS oriented then Relevant for EPU completing existing standard and identifying new topics such as patch management
IEEE 1686	International	International Standard for substation IED cyber security capabilities
IEC 62351	International	Power system data and Comm. protocol
ISO/IEC 27002	International	Framework for the protection of the grid critical Cyber Assets
NIST SP800-53 (National Institute of Standards and Technology)	USA	Complete framework for SCADA SP800-82and ICS cyber security
CPNI Guidelines (Centre for the Protection of National Infrastructure)	UK	Clear and valuable good practices for Process Control and SCADA security

The standards currently applicable to GE IEDs are NERC and IEEE1686.

3.1 NERC Compliance

The North American Electric Reliability Corporation (NERC) created a set of standards for the protection of critical infrastructure. These are known as the CIP standards (Critical Infrastructure Protection). These were introduced to ensure the protection of Critical Cyber Assets, which control or have an influence on the reliability of North America's bulk electric systems.

These standards have been compulsory in the USA for several years now. Compliance auditing started in June 2007, and utilities face extremely heavy fines for non-compliance.

CIP Standard	Description
CIP-002-1 Critical Cyber Assets	Define and document the Critical Assets and the Critical Cyber Assets
CIP-003-1 Security Management Controls	Define and document the Security Management Controls required to protect the Critical Cyber Assets
CIP-004-1 Personnel and Training	Define and Document Personnel handling and training required protecting Critical Cyber Assets
CIP-005-1 Electronic Security	Define and document logical security perimeter where Critical Cyber Assets reside and measures to control access points and monitor electronic access
CIP-006-1 Physical Security	Define and document Physical Security Perimeters within which Critical Cyber Assets reside
CIP-007-1 Systems Security Management	Define and document system test procedures, account and password management, security patch management, system vulnerability, system logging, change control and configuration required for all Critical Cyber Assets
CIP-008-1 Incident Reporting and Response Planning	Define and document procedures necessary when Cyber Security Incidents relating to Critical Cyber Assets are identified
CIP-009-1 Recovery Plans	Define and document Recovery plans for Critical Cyber Assets

The following sections provide further details about each of these standards, describing the associated responsibilities of the utility company and where the IED manufacturer can help the utilities with the necessary compliance to these standards.

3.1.1 CIP 002

CIP 002 concerns itself with the identification of:

- Critical assets, such as overhead lines and transformers
- Critical cyber assets, such as IEDs that use routable protocols to communicate outside or inside the Electronic Security Perimeter; or are accessible by dial-up.

Power Utility Responsibilities	GE Vernova' Contribution
Create the list of the assets	We can help the power utilities to create this asset register automatically. We can provide audits to list the Cyber assets.

3.1.2 CIP 003

CIP 003 requires the implementation of a cyber security policy, with associated documentation, which demonstrates the management's commitment and ability to secure its Critical Cyber Assets.

The standard also requires change control practices whereby all entity or vendor-related changes to hardware and software components are documented and maintained

Power Utility Responsibilities	GE Vernova's Contribution
To create a Cyber Security Policy	We can help the power utilities to have access control to its critical assets by providing centralized Access control. We can help the customer with its change control by providing a section in the documentation where it describes changes affecting the hardware and software.

3.1.3 CIP 004

CIP 004 requires that personnel having authorized cyber access or authorized physical access to Critical Cyber Assets, (including contractors and service vendors), have an appropriate level of training.

Power Utility Responsibilities	GE Vernova's Contribution
To provide appropriate training of its personnel	We can provide cyber security training.

3.1.4 CIP 005

CIP 005 requires the establishment of an Electronic Security Perimeter (ESP), which provides:

- The disabling of ports and services that are not required
- Permanent monitoring and access to logs (24x7x365)
- Vulnerability Assessments (yearly at a minimum)
- Documentation of Network Changes

Power Utility Responsibilities	GE Vernova's Contribution
To monitor access to the ESP To perform the vulnerability assessments To document network changes	To disable all ports not used in the IED. To monitor and record all access to the IED the access at all access points of the ESP.

3.1.5 CIP 006

CIP 006 states that Physical Security controls, providing perimeter monitoring and logging along with robust access controls, must be implemented and documented. All cyber assets used for Physical Security are considered critical and should be treated as such:

Power Utility Responsibilities	GE Vernova's Contribution
Provide physical security controls and perimeter monitoring. Ensure that people who have access to critical cyber assets don't have criminal records.	GE Vernova cannot provide additional help with this aspect.

3.1.6 CIP 007

CIP 007 covers the following points:

- Test procedures
- Ports and services
- Security patch management
- Antivirus
- Account management
- Monitoring
- An annual vulnerability assessment should be performed

Power Utility Responsibilities	GE Vernova's Contribution
To provide an incident response team and have appropriate processes in place	Test procedures: We can provide advice and help on testing. Ports and services: Our devices can disable unused ports and services. Security patch management: We can provide assistance. Antivirus: We can provide advice and assistance. Account management: We can provide advice and assistance. Monitoring: Our equipment monitors and logs access.

3.1.7 CIP 008

CIP 008 requires that an incident response plan be developed, including the definition of an incident response team, their responsibilities and associated procedures.

Power Utility Responsibilities	GE Vernova's Contribution
To provide an incident response team and have appropriate processes in place.	GE Vernova cannot provide additional help with this aspect.

3.1.8 CIP 009

CIP 009 states that a disaster recovery plan should be created and tested with annual drills.

Power Utility Responsibilities	GE Vernova's Contribution
To implement a recovery plan	To provide guidelines on recovery plans and backup/restore documentation.

3.2 IEEE 1686-2007

IEEE 1686-2007 is an IEEE Standard for substation IEDs cyber security capabilities. It proposes practical and achievable mechanisms to achieve secure operations.

The following features described in this standard apply:

- Passwords are 8 characters long and can contain upper-case, lower-case, numeric and special characters.
- Passwords are never displayed or transmitted to a user.
- IED functions and features are assigned to different password levels. The assignment is fixed.
- Record of an audit trail listing events in the order in which they occur, held in a circular buffer.
- Records contain all defined fields from the standard and record all defined function event types where the function is supported.
- No password defeat mechanism exists. Instead, a secure recovery password scheme is implemented.
- Unused ports (physical and logical) may be disabled.

4. CYBER SECURITY IMPLEMENTATION

GE Vernova's IEDs have always been and will continue to be equipped with state-of-the-art security measures. Due to the ever-evolving communication technology and new threats to security, this requirement is not static. Hardware and software security measures are continuously being developed and implemented to mitigate the associated threats and risks.

From Software Version 90 onwards, the MiCOM P40 Agile products provide enhanced security through the following features:

- An Authentication, Authorization, Accounting (AAA) Remote Authentication Dial-In User Service (RADIUS) client that is managed centrally, enables user attribution, provides accounting of all user activities, and uses secure standards based on strong cryptography for authentication and credential protection. In other words, this option uses a RADIUS.
- Server for user authentication. There is provision for both remote (RADIUS) and local (device) authentication.
- A Role-Based Access Control (RBAC) system that provides a permission model that allows access to the device operations and configurations based on specific roles and individual user accounts configured on the AAA server. That is, Administrator, Engineer, Operator, and Viewer roles are used.
- Security event reporting through both proprietary event logs and the Syslog protocol for supporting Security Information Event Management (SIEM) systems for centralized cybersecurity monitoring.
- Encryption of passwords - stored within the IED, in network messages between the MiCOM S1 Agile software and the IED, and in network messages between the RADIUS server and the IED (subject to the RADIUS server configuration).

4.1 Initial Setup

The requirements for initial setup of the IED for cyber-security and RBAC will depend on:

1. which interfaces, if any, the cyber-security is required,
2. the intended authentication method, as defined in the setting **Auth. Method**' in **SECURITY CONFIG** column (see the Authentication methods section).

When the authentication method is configured as **Device Only**, there are four pre-defined usernames, **VIEWER**, **OPERATOR**, **ENGINEER**, and **ADMINISTRATOR** that align with the **VIEWER**, **OPERATOR**, **ENGINEER** and **ADMINISTRATOR** roles (see the Device Users section).

When the authentication method is configured as 'Server Only' or 'Server + Device', users must be set up on the Radius server (see the RADIUS users' section). These users are separate from the pre-defined Device users. RADIUS server information must be configured in the IED to connect to the RADIUS server(s) for Server authentication (see the RADIUS server settings section). It is recommended that the Radius shared secret be changed from the default (see the RADIUS client-server validation section).

Whatever the authentication method, it is strongly recommended that the password for the Administrator be changed from the default. Changing the passwords for the other roles is optional.

5. Roles and Permissions

5.1 Roles

The P40 Agile products provide 4 specific roles to which individual user accounts can be configured:

- **VIEWER** (Level 0) Read some, Write minimal
- **OPERATOR** (Level 1) Read All, Write Few
- **ENGINEER** (Level 2) Read All, Write Some
- **ADMINISTRATOR** (Level 3) Read All, Write All

Only one role of one type is allowed to be logged in at a time. For example, one Operator can be logged in but not a second Operator at the same time. This prevents subsets of settings from being changed at the same time.

Roles are mapped to Access Level definitions:

VIEWER - No password required - Read access to Security features, Model Number, Serial Number, S/W version, Description, Plant reference, Security code (UI Only), Encryption key (UI Only), User Banner and security related cells.

This role will allow maximum concurrent access provided by P40. Viewer is the default role

OPERATOR - Operator password required - Read access to all data and settings. Write access to Primary/Secondary selector, Operator password setting, Password reset cell and log extraction cells (record selector). This role will not allow concurrent access.

ENGINEER - Engineer password required - Read access to all data and settings. Write access to Reset demands and counters. This role will not allow concurrent access.

ADMINISTRATOR - Administrator password required - Read access to all data and settings. Write access to All settings, PSL, IED Config, Security settings (port disabling etc.). This role can enable the bypass mode and forcefully logout any other role. This role will not allow concurrent access.

The IED defines the following roles with reference to the roles defined by IEC 62351-8.

P40 Roles	IEC 62351- 8 Roles	Access Level
VIEWER	VIEWER	Level 0
OPERATOR	OPERATOR	Level 1
ENGINEER	ENGINEER	Level 2
ADMINISTRATOR	SECADM + SECAUD	Level 3

By default, the IED is delivered with default factory roles account and passwords. These default passwords are shown in the table below:

Role	Default Password
ADMINISTRATOR	ChangeMe1#
ENGINEER	ChangeMe1#
OPERATOR	ChangeMe1#
VIEWER	NA

Note: It is strongly recommended that the password for the Administrator be changed from the default. Changing the passwords for the other roles is optional.

Administrators have the following rights as well:

- Setting the Bypass mode
- Forcefully logging out any other role
- Setting Authentication Method

'Firmware lock' is not supported by the P40 Agile IED. Firmware upgrade is not managed by the main software. The process involves using a dedicated firmware loading software tool. There is no access or control to this process via the main product firmware.

5.2 Permissions

Authentication and authorization are two different processes. An authenticated user cannot perform any action on the IED unless a privilege has been explicit granted to him/her to do so. This is the concept of “least privileges” access.

Privileges must be granted to users through roles. A role is a collection of privileges, and roles are granted to users.

Each user is associated with only one role. The privilege/role matrix is stored on the IED. This is known as Role-Based-Access Control (RBAC).

On successful user authentication, the IED will load the user’s role list. If the user’s role changes, the user must logout and log back in to exercise his/her privileges.

Existing User level/permission mapping in P40 are:

Role	Meaning	Read Operation	Write Operation
VIEWER	Read Some Write Minimal	SYSTEM DATA column: Description Plant Reference Model Number Serial Number S/W Ref. Access Level Security Feature SECURITY CONFIG column: User Banner Attempts Remain Blk Time Remain Fallback PW level Security Code (UI only)	Password Entry LCD Contrast (UI only)
OPERATOR	Read All Write Few	All data and settings are readable. Poll Measurements	All items writeable at "Viewer". Select Event, Main and Fault (upload). Extract Events (e.g. via MiCOM S1 Agile).
ENGINEER	Read All Write Some	All data and settings are readable. Poll Measurements	All items writeable at "Operator". Setting Cells that change visibility (Visible/Invisible). Setting Values (Primary/Secondary) selector. Commands: Reset Indication Reset Demand Reset Statistics Reset CB Data/counters

Role	Meaning	Read Operation	Write Operation
ADMINISTRATOR	Read All Write All	All data and settings are readable. Poll Measurements	All items writeable at "Engineer". Change all Setting cells. Operations: Extract and download Setting file. Extract and download PSL. Extract and download MCL (IEC 61850). Extraction of Disturbance Recorder. Courier/Modbus Accept Event (auto event extraction, e.g. via AE2R). Commands: Change Active Group setting. Close/Open CB. Change Comms device address. Set Date & Time. Switch MCL banks/Switch Conf. Bank in UI (IEC 61850). Enable/Disable Device ports (in SECURITY CONFIG column). All password settings. Bypass Enable/disable. Change Authentication Method.

The table below shows the predefined permissions assignment for the predefined Roles according to IEC 62351-8.

Role	View	Read	Dataset	Report	File Read	File Write	File Mngt	Control	Config.	Setting Group	Security
VIEWER	x			x							
OPERATOR	x	x		x				x			
ENGINEER	x	x	x	x		x	x		x		
ADMINISTRATOR	x	x	x	x	x	x	x	x	x	x	x

The table below shows the predefined permissions description according to IEC 62351-8.

Permission	Description
VIEW	Allows the subject/role to discover what objects are present within a Logical Device by presenting the type ID of those objects.
READ	Allows the subject/role to obtain all or some of the values in addition to the type and ID of objects that are present within a Logical-Device.
DATASET	Allows the subject/role to have full management rights for both permanent and non-permanent DataSets.
REPORTING	Allows a subject/role to use buffered reporting as well as un-buffered reporting.
FILEREAD	Allows the subject/role to have read rights for file objects.
FILEWRITE	Allows the subject/role to have write rights for file objects. This right includes the FILEREAD right.
FILEMNGT	Allows the role to transfer files to the Logical-Device, as well as delete existing files on the Logical-Device.
CONTROL	Allows a subject to perform control operations.
CONFIG	Allows a subject to locally or remotely configure certain aspects of the server.
SETTINGGROUP	Allows a subject to remotely configure Settings Groups.
SECURITY	Allows a subject/role to perform security functions at both a Server/Service Access Point and Logical-Device basis.

Specific read/write file permissions are listed in the following tables. Roles are mapped to Access Level definitions: A tick indicates that specific actions can be done by a user with the role allocated.

Read Files	Role			
	VIEWER	OPERATOR	ENGINEER	ADMINISTRATOR
Setting				X
PSL				X
mcl				X
Event		X	X	X
DR		X	X	X
Measurements		X	X	X

Write Files	Role			
	VIEWER	OPERATOR	ENGINEER	ADMINISTRATOR
Setting				X
PSL				X
mcl				X

6. AUTHENTICATION

6.1 Authentication Methods

The IED supports Bypass (no authentication), Device authentication and Server authentication.

Authentication Method	Description
Bypass Auth.	IED does not provide security, any user (Local/Remote) can login to the IED. IED does not validate user and password. In this case, there is no need to enter user-id and password to login.
Device Only	IED allows role access using local authentication.
Server Only	IED uses RADIUS server to validate access.
Server + Device	IED uses server authentication to validate user first. And it allows fallback to device authentication if the RADIUS server(s) are unavailable.

If **Bypass Auth.** is enabled, the IED ignores the **Auth. Method** setting.

The **Auth. Method** setting offers the following options for user authentication:

- **Server + Device** (This is the default setting for IEC 61850+Courier; IEC 61850+103; DNP3OE)
- **Device Only** (This is the default setting for Courier/IEC 60870-5-103/Modbus/DNP3) **Server Only**

Only an **ADMINISTRATOR** role may change the **Auth. Method** setting. If Administrator changes it, the role remains logged in. But only when the user logs out, their access-level is revoked.

If Authentication method is **Server Only** and RADIUS Server IP addresses are configured, no device user has access to the IED (only the RADIUS users will have access). Only the RADIUS Administrator role will be able to switch to "Server and Device auth". When the setting is “Server Only” but RADIUS Server IP are not configured (both Primary & Secondary are 0.0.0.0), the IED will automatically fall back to Device authentication.

When Authentication method is **Server Only**, if the RADIUS server(s) are unavailable, the user should first take actions to recover the RADIUS connection. If both RADIUS servers ultimately failed to recover, the user should follow the password reset procedure to reset the **Auth. Method** setting to **Device Only**.

6.2 Bypass

In **Bypass Auth.** mode, the IED does not provide security - any user can login. IED does not validate user and password. The bypass security feature provides easier access, with no authentication and encryption for situations when this is considered safe. Only the Administrator can enable Bypass mode.

There are five modes for authentication bypass:

1. **Disabled** - no interfaces in **Bypass Auth.** mode (normal authentication is active)
2. **Local & Remote**
   - Front Panel
   - Front Port
   - Rear Ports
   - Ethernet
3. **Local** - will bypass authentication for
   - Front Panel
   - Front Port

4. **Remote** - will bypass authentication for
   - Ethernet
   - Rear Ports
5. **HMI-Only** - will bypass authentication only for front panel

Bypass Authentication for Bypass Mode	Front Panel	Front Port	Rear Port	Ethernet
Disabled				
Local & Remote	X	X	X	X
Local	X	X		
Remote			X	X
HMI-Only	X			

The DDB signal Security Bypass is available to indicate that the IED is in **Bypass Auth.** mode.

6.3 Login

A user can only login through the following methods:

- Front Panel User Interface
- Using MiCOM S1 Agile, connected to either the Front Port, Rear Port 1 or 2, or NIC (Ethernet) interface.

The interfaces/protocols implemented in P40 are listed in the following table.

The product supports both RBAC (with **Server + Device** authentication) and original Access Level. The Courier Interfaces/HMI use the RBAC whilst other protocols such as Modbus, IEC 60870-5-103, DNP3 use the original Access Level to authenticate.

The following table shows different product variants that support different protocols on Rear ports and Network ports.

Local Access	Front Port	Rear Port (1/2)	NIC (Ethernet) Port	Supported Auth. Mechanism
HMI Courier	Courier	Courier	-	Device
HMI Courier	Courier	Courier	IEC 61850 + SNMP + Courier tunnel	Server and Device
HMI Courier	Courier	Modbus (no server, device auth only, old access levels)	-	Device Old Access level for Modbus
HMI Courier	Courier	IEC 60870-5-103 (no server, device auth only, old access levels)	-	Device Old Access level for 103
HMI Courier	Courier	IEC 60870-5-103 (no server, device auth only, old access levels)	IEC 61850 + SNMP + Courier tunnel	Server and Device Old Access level for 103
HMI Courier	Courier	DNP3 (no server, device auth only, old access levels)	-	Device Old Access level for DNP3
HMI Courier	Courier	Courier	DNP3 + SNMP + Courier tunnel	Server and Device Old Access level for DNP3

6.3.1 Front Panel Login

Front panel User Interface supports both Device authentication and Server authentication. The P40 gives the user the option to enter a username in HMI panel.

The user can type their password in the password cell.

For Device authentication, the user must enter one of the pre-defined usernames **VIEWER**, **OPERATOR**, **ENGINEER**, **ADMINISTRATOR**. The user can scroll through these names using either of the hotkeys. Users must then enter their password.

For Server authentication, the user can enter any valid pre-defined Radius server username. Using the front panel User Interface, the user can change the displayed character type (digit, uppercase letter, lowercase letter, special character) by either of the hotkeys. For ease of typing, it is preferable to do Server authentication login using MiCOM S1 Agile.

After successful log in, a confirmation message is displayed, showing the logged in username. For example:

```
LOGIN SUCCESS
OPERATOR
```

6.3.2 MiCOM S1 Login

When the user attempts to login, MiCOM S1 Agile will prompt the user with a login dialog box that contains a username text entry field and a password text entry field. The username field is a combo-dropdown style text field that includes the fixed usernames (**Administrator**, **Engineer**, **Operator**, **Viewer**) for Device authentication - the user can pick one of these if they wish or type any other pre-defined username for Radius authentication in the textbox.

6.3.3 Warning Banner

After successful authentication and authorization to access the IED, MiCOM S1 Agile will display a security warning banner to the user.

If **I Agree** is selected, the integrated authentication and authorization is completed. Selecting **I Disagree** causes the program to close and the login user to logout.

6.3.4 Login Failed

When Device authentication fails, a failure message is displayed:

```
LOGIN FAILED
```

For front panel authentication, this is shown for 2 seconds on the LCD.

For S1 Agile authentication, this is a pop-up dialog that the user must click to acknowledge.

6.4 User Sessions

Open sessions will be automatically closed by the IED after a configurable session timeout.

The inactivity timer configuration setting defines the period of time that the IED waits in idleness before a logged in user is automatically logged out.

If there is any data change that does not commit to IED, the data change is discarded when user logged out. If there is any access that does not finish, the access will fail when user logged out. Front panel will display the default page when user reaches the defined inactivity time.

If the keypad is inactive for configured UI inactivity timer, user logout message is displayed. And front panel user interface reverts to the Viewer access level.

Already, **RP1 InactivTimer** and **RP2 InactivTimer** settings control the inactivity timer for RP1 and RP2. There are new settings to support the configurable inactivity timer, as follows:

- **FP InactvTimer**
- **UI InactivTimer**
- **NIC Tunl Timeout**

Administrator, Operator and Engineer roles will accept only one session to the device at one time. Only Viewer allows 4 concurrent sessions at one time. There is no message displayed for concurrent sessions over Ethernet Port communication or the front port (FP); only the HMI displays a concurrent session notification.

Only one user session is allowed from all the access methods mentioned below:

- Front Panel Push buttons
- Front Port (serial) FP1
- Rear Port 1 (RP1)
- Rear Port 2 (RP2)
- Ethernet Port (NIC)

Setting Name	Description	Min	Max	Default	Units	Minimum Permissions
Attempts Limit	Number of failed authentications before the device blocks subsequent authentication attempts for the lockout period. A value of 0 means Lockout is disabled.	0 (lockout disabled)	99	3	-	Administrator
Lockout Period	The period of time in seconds a user is prevented from logging in, after being locked out.	1	5940	5	sec	Administrator
FP InactivTimer	FP Inactivity Timer is the time of idleness on Front Port before a logged in user is automatically logged out and revert the access level to the viewer role.	0 (no Inactivity Timeout)	30	10	min	Administrator
UI InactivTimer	UI Inactivity Timer is the time of idleness on Front Panel before a logged in user is automatically logged out and revert the access level to the viewer role.	0 (no Inactivity Timeout)	30	10	min	Administrator
NIC Tunl Timeout	NIC Tunl Timeout is the time of idleness on Ethernet Port (NIC) before a logged in user is automatically logged out and revert the access level to the viewer role.	1	30	5	min	Administrator
RP1 InactivTimer	RP1 Inactivity Timer is the time of idleness on Rear Port 1 before a logged in user is automatically logged out and revert the access level to the viewer role.	1	30	15	min	Administrator
RP2 InactiveTimer	RP2 Inactivity Timer is the time of idleness on Rear Port 2 before a logged in user is automatically logged out and revert the access level to the viewer role.	1	30	15	min	Administrator

The recommended settings for **Attempts Limit** is **3** and **Lockout Period** is **5 sec** to discourage brute force attacks. If the Lockout period is too large, anybody can lockout Device users.

6.5 User Locking Policy

A local user locking policy is implemented for Device access:

- This user locking policy applies to both Device users.
- The account is unlocked at the first successful login after the **Lockout Period**
- By default, if the user consecutively fails to login 3 times, the user account will be locked for 3 minutes.

Each user account records how long it has been locked if the account is locked.

Each user account records how many times it has consecutively failed to login. User account failed times include all interfaces login attempts. For example, if the **Attempts Limit** setting is 3 and the operator failed to login from front panel 2 times, and they changed to login from the Courier interface, but failed again, then the Operator would be locked out.

When the IED is powered on, these **Attempts Limit** counter resets to zero.

When the user account exceeds the **Attempts Limit** it is locked for **Lockout period**, at that time **Attempt limit** resets to zero.

The locked user account will be unlocked automatically, after the configured "Lockout Period" is expired.

All user accounts need to wait until the lockout period expires. No user can unlock the locked account.

If the locked account attempts to login the IED from the Front Panel, the following text is displayed (example):

```
OPERATOR
IS LOCKED
```

Usernames are specific to each user account, such as **Engineer**, **Operator** and **Administrator** for Device authentication.

When supporting both RBAC enabled interfaces and non-RBAC interfaces (such as Modbus), the P40 handles features such as user-locking feature as follows

- If an RBAC user exceeds the invalid password limit, that user gets locked for all the interfaces.
- On a non-RBAC interface, if an Access Level exceeds the invalid password limit, P40 only blocks that.

6.6 Logout

Each user should ***Log out*** after reading or configuring the IED.

Both S1 Agile and the Front Panel provide a one-step logout.

The user can only log out from the front panel if they logged in from the front panel. If the user logged in from S1 Agile, they have to logout from S1 Agile.

6.6.1 Front Panel Logout

Go up to the top of the menu tree. When you are at the Column Heading level and you press the Up button, you may be prompted to log out with the following display:

```
ENTER TO
LOGOUT
CLEAR TO
CANCEL
```

If you confirm, the following message is displayed for 2 seconds:

```
LOGGED OUT
<ROLE NAME>
LOGGED OUT
ADMINISTRATOR
```

If you confirm, the following message is displayed for 2 seconds:

If you decide not to log out (i.e. you cancel), the following message is displayed for 2 seconds.

```
LOGOUT
CANCELLED
ADMINISTRATOR
```

6.6.2 MiCOM S1 Logout

Right-click on the device name in the System Explorer panel in MiCOM S1 Agile and select **Log Off**.

In the Log Off confirmation dialog, click **Yes**.

6.7 Device Users

For device authentication, the user must enter one of the pre-defined usernames **VIEWER**, **OPERATOR**, **ENGINEER**, or **ADMINISTRATOR**. This means that device users and roles are same in the P40, and therefore there can be only one user for each role.

6.8 Password Policy

Cyber-security requires strong passwords and validation for NERC compliance.

The NERC password complexity policy requires an alpha-numeric password (for all accesses, front panel, and network/local port) that meets the following **mandatory** requirements:

1. Passwords cannot contain the user's account name or parts of the user's full name that exceed two consecutive characters.
2. Passwords must be at least eight characters in length but not exceed 16 characters in length.
3. Passwords must contain characters from all four categories:
   - English uppercase characters (A through Z).
   - English lowercase characters (a through z).
   - Numeric (digits 0 through 9).
   - Special non-alphanumeric characters (such as @,!,#,{, but not limited to only those)

For Device authentication, the IED will enforce that configured passwords meet these requirements.

For Server authentication, the password complexity and user locking policy is defined in the external Radius server.

MiCOM S1 Agile and P40 relays use the proprietary COURIER protocol over TCP. Passwords transmitted over this protocol are encrypted using the TEA (Tiny Encryption Algorithm) encryption method. This block cipher uses a 128-bit key and a 64-bit data block size.

This method of encryption is widely used in COURIER communication for securely transmitting passwords from the engineering tool to the relays. These passwords are not readable on the network, as they are encrypted and can only be decrypted by the receiving device using the 128-bit key and algorithm.

The encryption keys are hardcoded (not stored externally) within the application software and the relay firmware, ensuring strong integrity and secure communication between devices.

6.9 Change Password

In the Device authentication mode, **VIEWER** does not have a password associated with it.

The password can be changed either from the front panel User Interface, or from MiCOM S1 Agile using the **Change/Set Password** option in the **Supervise Device** dialog box.

It is recommended that user passwords are changed periodically.

6.10 RADIUS

When the **Auth. Method** setting is configured as **Server Only** or **Server + Device**, a user must log in with a username and password that has been predefined on the Radius server.

This log in can be performed from any interface, as described in the Login section. The IED will authenticate the user to the active RADIUS server, over the Ethernet connection.

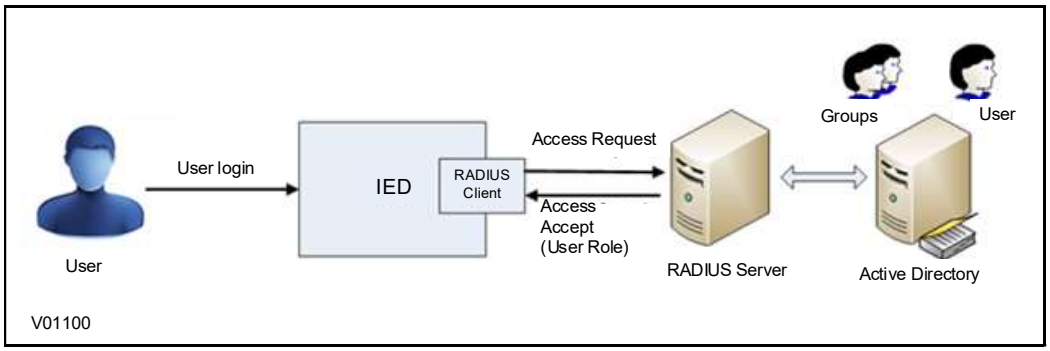

Figure 1: RADIUS server/client communication

6.10.1 RADIUS Users

For Server authentication, RADIUS users and passwords are created in the server (in the Active Directory).

The username must consist of uppercase letters (A to Z) and digits (0 to 9) only. No lowercase letters or special characters are allowed.

Each RADIUS user must have a password that meets the password policy of the Active Directory (not the password policy of the P40) and have one of the four roles assigned in the Active Directory.

The number of RADIUS users is not limited by the IED.

RADIUS password changes are done in the Active Directory (after password expiration).

6.10.2 RADIUS Client

Two Radius servers are supported by the IED in the configuration for redundancy. The IED will try each in sequence until one responds.

The IED will first try server 1 up to the configured number of retries, leaving a request timeout between each request. If, after this point there is still no valid answer from server 1, the IED will switch to server 2 and repeat for up to the configured number of retries.

If the number of retries for the second server is exceeded, the IED will give up entirely on Server authentication. If Authentication Method is **Server + Device**, the IED will fallback to Device authentication. A **RADIUS Server unavailable** security event is also logged under this condition.

The RADIUS implementation supports the following authentication protocols:

- EAP-TTLS-MSCHAP2
- PAP
- EAP-PEAP-MSCHAP2
- PAP EAP-TTLS-PAP (Default)

The RADIUS implementation queries the Role ID vendor attribute and establishes the logged in user security context with that role.

RADIUS Config.	Value
Vendor ID	2910
Vendor Attribute	1
P40 Role Values	
Administrator	3
Engineer	2
Operator	1
Viewer	0

6.10.3 RADIUS Server Settings

The following RADIUS server information must be configured in the IED to connect to the RADIUS server(s) for Server authentication.

Setting Name	Description	Min	Max	Default	Units	Minimum Permissions
RADIUS Pri IP	IP address of Server 1. Default value indicates no Primary Radius server is configured, and so Radius is disabled.	0.0.0.0	255.255.255.255	0.0.0.0	-	Administrator
RADIUS Sec IP	IP address of Server 2. Default value indicates no Secondary Radius server is configured.	0.0.0.0	255.255.255.255	0.0.0.0	-	Administrator
RADIUS Auth Port	Radius authentication port.	1	65535	1812	-	Administrator
RADIUS Security	Authentication protocol to be used by Radius server.	EAP-TTLS-MSCHAP2 PAP EAP-PEAP-MSCHAP2 PAP EAP-TTLS-PAP		PAP EAP-TTLS-PAP	-	Administrator
RADIUS Timeout	Timeout in seconds between re-transmission requests.	1	900	2	sec	Administrator
RADIUS Retries	Number of retries before giving up.	1	99	10	-	Administrator
RADIUS Secret	Shared Secret used in authentication. It is only displayed as asterisks.	1 character	16 characters	ChangeMe1#	-	Administrator

The data cell **RADIUS Status** indicates the status of the currently selected RADIUS server. This will display either **Disabled**, **Server OK**, or **Failed**.

6.10.4 RADIUS Accounting

Radius accounting is not supported by the IED. The user can achieve accounting through syslog (see the SYSLOG section).

6.10.5 RADIUS Client-Server Validation

Client-server validation is achieved using a shared secret. The IED must be configured with the **RADIUS Secret** setting to match the shared secret configured in the RADIUS server. It is recommended (but not enforced) that this setting meets the P40 password requirements.

Note: It is recommended that the shared secret be changed from the default before using Radius authentication.

The IED does not support exchange of CA certificates. The RADIUS server may send a certificate, but the IED will not verify it.

6.11 Recovery

6.11.1 Restore to Local Factory Default

The ***Restore Defaults*** setting is available to facilitate NERC CIP compliance requirements for decommissioning critical cyber devices. Only the **Administrator** role can change this setting.

The ***Restore Defaults*** setting under the **CONFIGURATION** column is used to restore a setting group to factory default settings.

0 = **No Operation**

1 = **All Settings**

2 = **Setting Group 1**

3 = **Setting Group 2**

4 = **Setting Group 3**

5 = **Setting Group 4**

To restore the default values to the settings in any setting group, set the **Restore Defaults** setting to the relevant Group number. Alternatively, it is possible to set the **Restore Defaults** setting to **All Settings** to restore the default values to all the IEDs settings, not only one setting group.

Note: Restoring defaults to all settings includes the rear communication port settings, which may result in communication via the rear port being disrupted if the new (default) settings do not match those of the master station.

Data (events, DR, fault records, protection counters etc.) is left untouched. When decommissioning critical cyber IEDs, users may want to clear all data and events as well.

6.11.2 Password Reset Procedure

If you mislay a device's password (if Administrator forgets their password), the passwords can be reset to default using a recovery password. To obtain the recovery password you must contact the contact centre at GAsupport@gevernova.com and supply the Serial Number and the security code. The contact centre will use these items to generate a Recovery Password.

The security code is a 16-character string of uppercase characters. It is a read-only parameter. The device generates its own security code randomly. A new code is generated under the following conditions:

- On power up
- Whenever settings are set back to default
- On expiry of validity timer (see below)
- When the recovery password is entered

This reset procedure can be only accomplished through front panel exclusively and cannot be done over any other interface. As soon as the security code is displayed on the front panel User Interface, a validity timer is started. This validity timer is set to 72 hours and is not configurable. This provides enough time for the contact centre to manually generate and send a recovery password. The Service Level Agreement (SLA) for recovery password generation is one working day, so 72 hours is sufficient time, even allowing for closure of the contact centre over weekends and bank holidays.

The procedure is:

The security code is displayed on confirmation. The validity timer is then started. The security code can only be read from the front panel.

This reset procedure can be only accomplished through front panel exclusively and cannot be done over the Ethernet/serial port, but only when physically present in front of the IED. In the event of losing all passwords (if the Administrator forgets their password) the user could reset the IED to default passwords, following the procedure below:

1. User navigates to **Security Code** cell in **SECURITY CONFIG** column
2. To prevent accidental reading of the IED **Security Code**, the cell will initially display a warning message:

```
PRESS ENTER TO
READ SEC. CODE
```

3. Press Enter to read the **Security Code**.
4. User sends an email to the contact centre at GAsupport@gevernova.com providing the full IED serial number and displayed **Security Code**, using a recognisable corporate email account
5. The contact centre emails the user with the Recovery Password. The recovery password is intended for recovery only. It is not a replacement password that can be used continually. It can only be used once – for password recovery.
6. User logs in with the username **ADMINISTRATOR** and the recovery password in to the Password setting in **SYSTEM DATA** column.
7. Then IED will prompt

```
RESET
PASSWORD?
ENTER OR CLEAR
```

8. Press **Enter** to continue the reset procedure
9. If the recovery password successfully validates, the default passwords are restored for each access level for Device authentication.
10. Change **Auth. Method** setting to **Server + Device** if applicable.

Note: Restoring passwords to defaults does not affect any other settings and does not provoke reboot of the IED. The protection and control functions of the IED are always maintained.

6.11.3 Access Level DDBs

The current level of access for each interface is available for use in the Programming Scheme Logic (PSL) as these DDB signals:

- **HMI Access Lvl 1**
- **HMI Access Lvl 2**
- **FPort AccessLvl1**
- **FPort AccessLvl2**
- **RPrt1 AccessLvl1**
- **RPrt1 AccessLvl2**
- **RPrt2 AccessLvl1**
- **RPrt2 AccessLvl2**

Each pair of DDB signals indicates the access level as follows:

- Level 1 off, Level 2 off = 0
- Level 1 on, Level 2 off = 1
- Level 1 off, Level 2 on = 2
- Level 1 on, Level 2 on = 3

KEY:
HMI = Human Machine Interface

FPort = Front Port

RPrt = Rear Port

Lvl = Level

6.12 Disabling Physical Ports

It is possible to disable unused physical ports. A level 3 password is needed to perform this action.

To prevent accidental disabling of a port, a warning message is displayed according to whichever port is required to be disabled. For example, if rear port 1 is to be disabled, the following message appears:

```
REAR PORT 1 TO BE
DISABLED.CONFIRM
```

The following ports can be disabled, depending on the model.

- Front port (**Front Port** setting)
- Rear port 1 (**Rear Port 1** setting)
- Rear port 2 (**Rear Port 2** setting)
- Ethernet port (**Ethernet Port** setting)

Note: It is not possible to disable a port from which the disabling port command originates. We do not generally advise disabling the physical Ethernet port.

6.13 Disabling Logical Ports

It is possible to disable unused logical ports. A level 3 password is needed to perform this action.

Note: The port disabling setting cells are not provided in the settings file. It is only possible to do this using the HMI front panel.

The following protocols can be disabled:

- IEC 61850 (**IEC 61850** setting)
- DNP3 Over Ethernet (**DNP3 OE** setting)
- Courier Tunnelling (**Courier Tunnel** setting)

Note: If any of these protocols are enabled or disabled, the Ethernet card will reboot.

7. SECURITY EVENT MANAGEMENT

To implement NERC-compliant cyber-security, a range of security events are logged in the Security Event file.

7.1 Security Events: Courier

Event Value	Display
PASSWORD LEVEL UNLOCKED	USER LOGGED IN ON {int} LEVEL {n}
PASSWORD LEVEL RESET	USER LOGGED OUT ON {int} LEVEL {n}
PASSWORD SET BLANK	P/WORD SET BLANK BY {int} LEVEL {p}
PASSWORD SET NON-COMPLIANT	P/WORD NOT-NERC BY {int} LEVEL {p}
PASSWORD MODIFIED	PASSWORD CHANGED BY {int} LEVEL {p}
PASSWORD ENTRY BLOCKED	PASSWORD BLOCKED ON {int}
PASSWORD ENTRY UNBLOCKED	P/WORD UNBLOCKED ON {int}
INVALID PASSWORD ENTERED	INV P/W ENTERED ON <int}
PASSWORD ENTERED WHILE BLOCKED	P/W ENT WHEN BLK ON {int}
RECOVERY PASSWORD ENTERED	RCVY P/W ENTERED ON {int}
IED SECURITY CODE READ	IED SEC CODE RD ON {int}
IED SECURITY CODE TIMER EXPIRED	IED SEC CODE EXP -
PORT DISABLED	PORT DISABLED BY {int} PORT {prt}
PORT ENABLED	PORT ENABLED BY {int} PORT {prt}
DEF. DISPLAY NOT NERC COMPLIANT	DEF DSP NOT-NERC
PSL SETTINGS DOWNLOADED	PSL STNG D/LOAD BY {int} GROUP {grp}
DNP SETTINGS DOWNLOADED	DNP STNG D/LOAD BY {int}
TRACE DATA DOWNLOADED	TRACE DAT D/LOAD BY {int}
IEC 61850 CONFIG DOWNLOADED	IED CONFG D/LOAD BY {int}
USER CURVES DOWNLOADED	USER CRV D/LOAD BY {int} GROUP {crv}
PSL CONFIG DOWNLOADED	PSL CONFG D/LOAD BY {int} GROUP {grp}
SETTINGS DOWNLOADED	SETTINGS D/LOAD BY {int} GROUP {grp}
PSL SETTINGS UPLOADED	PSL STNG UPLOAD BY {int} GROUP {grp}
DNP SETTINGS UPLOADED	DNP STNG UPLOAD BY {int}
TRACE DATA UPLOADED	TRACE DAT UPLOAD BY {int}

Event Value	Display
IEC 61850 CONFIG UPLOADED	IED CONFG UPLOAD BY {int}
USER CURVES UPLOADED	USER CRV UPLOAD BY {int} GROUP {crv}
PSL CONFIG UPLOADED	PSL CONFG UPLOAD BY {int} GROUP {grp}
SETTINGS UPLOADED	SETTINGS UPLOAD BY {int} GROUP {grp}
EVENTS HAVE BEEN EXTRACTED	EVENTS EXTRACTED BY {int} {nov} EVNTS
ACTIVE GROUP CHANGED	ACTIVE GRP CHNGE BY {int} GROUP {grp}
CS SETTINGS CHANGED	C & S CHANGED BY {int}
DR SETTINGS CHANGED	DR CHANGED BY {int}
SETTING GROUP CHANGED	SETTINGS CHANGED BY {int} GROUP {grp}
POWER ON	POWER ON -
SOFTWARE_DOWNLOADED	S/W DOWNLOADED -

where:

- int is the interface definition (UI, FP, RP1, RP2, TNL, TCP)
- prt is the port ID (FP, RP1, RP2, TNL, DNP3, IEC, ETHR)
- grp is the group number (1, 2, 3, 4)
- crv is the Curve group number (1, 2, 3, 4)
- n is the new access level (0, 1, 2, 3)
- p is the password level (1, 2, 3)
- nov is the number of events (1 - nnn)

Each new event has an incremented unique number; therefore, missing events appear as gap in the sequence. The unique identifier forms part of the event record that is read or uploaded from the IED.

Note: It is no longer possible to clear Event, Fault, Maintenance, and Disturbance Records.

7.2 Syslog

Security events are also logged to a remote syslog server.

All login and logout attempts from local and central authentication, whether successful or failed, are logged. The contents of each successful or failed, login and logout security event include a specific username.

The security log cannot be cleaned by any of the available roles.

The contents of each login and/or logout security event include the relevant interface. The following interfaces are supported:

Interface	Abbr.
Front Port	FP
Rear Port 1	RP1
Rear Port 2	RP2
Ethernet	NET
Front Panel	UI

The following events are available to be logged to the syslog server:

Event Categorisation	Severity
Login - Authentication Successful	Informational (6)
Login - Authentication Failure	Informational (6)
Logout	Informational (6)
RADIUS Server Unavailable	Alert (1)
Session Timeout	Informational (6)
Account Locked	Notice (5)
User Accessed while Locked	Notice (5)
ByPass Activate	Notice (5)
ByPass Deactivate	Notice (5)
Password Change	Notice (5)
Recovery Password is Entered to Reset the Passwords	Notice (5)
Settings/Configuration Changed	Notice (5)
Settings/Configuration uploaded (to S1 Agile)	Notice (5)
Default Settings Restored	Notice (5)
Active Setting Group Changed	Notice (5)
	Notice (5)
	Notice (5)
	Notice (5)
Default User Curves Restored	Notice (5)
	Notice (5)
	Notice (5)

7.3 Syslog Client

The IED supports security event reporting through the Syslog protocol for supporting Security Information Event Management (SIEM) systems for centralized cyber security Monitoring over UDP protocol.

The IED is a Syslog client that supports two Syslog servers. The following settings are available in the *COMMUNICATIONS* column.

Setting Name	Description	Min	Max	Default	Units	Min. Permission
SysLog Pri IP	The IP address of the target Syslog server (Primary).	0.0.0.0	223.255.255.254	0.0.0.0	-	Administrator
SysLog Sec IP	The IP address of the target Syslog server (Secondary).	0.0.0.0	223.255.255.254	0.0.0.0	-	Administrator
SysLog Port	The UDP port number of the target Syslog server.	1	65535	514	-	Administrator

7.4 Syslog Functionality

The P40 supports the RFC 5424 UDP protocol.

The table below shows the format of a Syslog event.

Header	<PRIVAL>1 YYYY-MM-DDTHH:mm:ss.fffZ IEDName userlog - MSGID	
	PRIVAL	32 + [event severity] 32 is derived from the facility number 4 (meaning security/authorization messages) Event severity is derived from the received message.
	YYYY	4 Digit year, i.e. 2018 Derived from the received message timestamp.
	MM	2 Digit month; 01 to 12 (for January to December). Derived from the received message timestamp.
	DD	2 Digit day of month; 01 to 31 (depending upon the month) Derived from the received message timestamp.
	HH	2 Digit hour of day; 00 to 23 Derived from the received message timestamp.
	mm	2 Digit count of minutes elapsed in the current hour; 00 to 59 Derived from the received message timestamp.
	ss	2 Digit count of seconds elapsed in the current minute; 00 to 59 Derived from the received message timestamp.
	fff	3 Digit fraction of seconds (millisecond resolution); 0 to 999 Derived from the received message timestamp.
	IP Addr	IP Address assigned to the Ethernet Board.
	MSGID	Unique message type identity Derived from the received message event type.
Data (common)	[timeQuality tzKnown=X]	
	X	Timezone quality attribute for event timestamp (in header) 0; indicating Local Time offset and DST settings are not enabled (i.e. timestamp is UTC)
Data (Platform event)	[gePlatformEvt channel=IFACE accessLevel=AL evtid=UUID extra=EDATA] DETAIL	
	IFACE	Channel access type Copied from the received message interface name.
	AL	Access Level Copied from the received message access level.
	UUID	Unique event identification Copied from the received message unique id.
	EDATA	Extra event data - meaning of which is specific to the event type (see MSGID in header) Copied from the received message extra info.
	DETAIL	Event details. Derived from the received message event text and value.
Data (Enhanced event)	[geUserInfo channel=IFACE loginId=USER] DETAIL	
	IFACE	Channel access type Copied from the received message interface name.
	USER	Logged in username who generated the event Copied from the received message user id.
	DETAIL	Event details. Copied from the received message event text.
Formatted Examples:	<38>1 2018-02-06T11:46:32.074Z Feeder1 userlog - 5120 [timeQuality tzKnown=0][gePlatformEvt channel=UI accessLevel=3 evtid=4 extra=0] User Logged In on UI Level 3User Logged In on UI Level 3 <38>1 2018-02-06T11:46:32.074Z Feeder1 userlog - 9999 [timeQuality tzKnown=0][geUserInfo channel=UI loginId=user1] Login - Authentication successful	

Sample Syslog messages are shown below:

Event	Access Method	Syslog Message (As from Syslog Server)
Authentication Successful	UI	04/17/2019 14:43:32 userlog 9999 [timeQuality tzKnown=`0'][geUserInfo channel=`FP' loginid=`ADMINISTRATOR'] Login - Authentication successful
Authentication Failure	Serial	04/19/201913:36:08userlog 9999 [timeQuality tzKnown=`0'][geUserInfo channel=`RP1' loginid=`ENGINEER'] Login - Authentication fail
Network Login Success	Courier Tunnel (device authentication)	04/17/201915:29:20userlog 9999 [timeQuality tzKnown=`0'][geUserInfo channel=`NET' loginid=`ENGINEER'] Login - Authentication successful
Logout	Serial	04/19/201913:52:08userlog 9999 [timeQuality tzKnown=`0'][geUserInfo channel=`RP1' loginid=`ADMINISTRATOR'] Logout
Radius Unavailable	FP	04/18/201912:40:14 userlog 5163 [timeQuality tzKnown=`0'][gePlatformEvt channel=`FP' accessLevel=`0' evtid=`3715' extra=`0'] RADIUS UnAvailbl
Bypass Activated	FP	04/18/201912:39:19userlog 9998 [timeQuality tzKnown=`0'][geUserInfo channel=`FP' loginid=`ADMINISTRATOR'] ByPass Activated
Settings modified	Courier Tunnel	04/18/201911:52:35 userlog 5149 [timeQuality tzKnown=`0'][gePlatformEvt channel=`NET' accessLevel=`3' evtid=`3677' extra=`0'] Settings Upload By TNL

APPENDIX A

ORDERING OPTIONS

Ordering Information

Variants	Order Number
P741 Busbar Protection Relay	P741
Vx Aux Rating	
48 - 125 Vdc (40 - 100 Vac)	8
110 - 250 Vdc (100 - 240 Vac)	9
Communication Boards	
1 communication board (1 to 4 Peripheral Unit 2)	1
communication board (to 8 Peripheral Unit 3)	2
communication board (to 12 Peripheral Unit 4)	3
communication board (to 16 Peripheral Unit 5)	4
communication board (to 20 Peripheral Unit 6)	5
communication board (to 24 Peripheral Unit 7)	6
communication board (to 28 Peripheral Uni 8)	7
Hardware Options	
Standard - None	1
IRIG-B Only (modulated)	2
Ethernet (100 Mbits/s) without IRIG-B	6
Ethernet (100Mbit/s) plus IRIG-B (Modulated)	A
Ethernet (100Mbit/s) plus IRIG-B (Un-modulated)	B
2nd Rear Port & InterMiCOM & IRIG-B (Modulated)	F
Redundant Ethernet RSTP, 2 multi-mode fibre ports + Modulated IRIG-B	J
Redundant Ethernet RSTP, 2 multi-mode fibre ports + Un-modulated IRIG-B	K
Redundant Ethernet PRP/HSR, 2 fibre ports + Modulated IRIG-B	N
Redundant Ethernet PRP/HSR, 2 fibre ports + Unmodulated IRIG-B	P
Single Ethernet 1 LC Duplex port + Universal IRIG-B + 1588	U
Redundant Ethernet PRP/HSR/RSTP/Failover 2 RJ45 + Universal IRIG-B + 1588	W
Redundant Ethernet PRP/HSR/RSTP/Failover 2 LC Duplex ports + Universal IRIG-B + 1588	Y
Product Specific	
OM1	A
OM1 or OM2	B
Protocol Options	
K-Bus/Courier	1
IEC60870-5-103 (Via KITZ274)	
Courier (K-Bus), IEC60870-5-103 via KITZ274 (Supplied as Courier. KITZ274 to be ordered)	6
Additional IEC61850	
Mounting	
Flush/Panel Mounting with Harsh Env. Coating, with USB Port, Black and Silver Front Panel	S
Language	
Multilingual - English, French, German, Spanish	0
Multilingual - English, French, German, Russian	5
Software Issue	
Unless specified the latest version will be delivered	**
Customisation	
Default	0
Customer specific	A
Central Networks Version	5
Design Suffix	

Variants	Order Number
P742 Busbar Protection Peripheral Unit (40TE)	P742
Vx Aux Rating	
48 - 125Vdc (40 - 100Vac)	8
110 - 250Vdc (100 - 240Vac)	9
Hardware Options	
With In = 1/5A CT Input	1
Hardware Options	
Standard - None	1
Product Specific	
8 Relays Outputs and 16 Status Inputs, OM1	A
8 Relays Outputs, 4 High Break and 8 Status Inputs, OM1	B
8 Relays Outputs and 16 Status Inputs, OM1 or OM2	C
8 Relays Outputs, 4 High Break and 8 Status Inputs, OM1 or OM2	D
Protocol Options	
K-Bus/Courier IEC60870-5-103 (Via KITZ274)	1
Mounting	
Flush/Panel Mounting with Harsh Env. Coating, with USB Port, Black and Silver Front Panel	S
Language	
Multilingual - English, French, German, Spanish	0
Multilingual - English, French, German, Russian	5
Software Issue	
Unless specified the latest version will be delivered	**
Customisation	
Default	0
Customer specific	A
Central Networks Version	5
Design Suffix	

Variants	Order Number
P743 Busbar Protection Peripheral Unit (60TE)	P743
Vx Aux Rating	
48 - 125Vdc (40 - 100Vac)	8
110 - 250Vdc (100 - 240Vac)	9
Hardware Options	
Without CT Input	0
With In = 1/5A CT Input	1
Redundant Ethernet PRP/Failover, 2 multi-mode fibre ports, IEC 61850-9-2 LE Sampled Analogue Values - Process Bus Model *	C
Hardware Options	
Standard - None	1
Ethernet (100 Mbits/s) without IRIG-B	6
Redundant Ethernet RSTP, 2 multi-mode fibre ports + Modulated IRIG-B	J
Redundant Ethernet RSTP, 2 multi-mode fibre ports + Un-modulated IRIG-B	K
Redundant Ethernet PRP/HSR, 2 fibre ports + Modulated IRIG-B	N
Redundant Ethernet PRP/HSR, 2 fibre ports + Unmodulated IRIG-B	P
Single Ethernet 1 LC Duplex port + Universal IRIG-B + 1588	U
Redundant Ethernet PRP/HSR/RSTP/Failover 2 RJ45 + Universal IRIG-B + 1588	W
Redundant Ethernet PRP/HSR/RSTP/Failover 2 LC Duplex ports + Universal IRIG-B + 1588	Y
Product Specific	
16 Relays Outputs and 24 Status Inputs**, OM1	A
16 Relays Outputs, 4 High Break and 16 Status Inputs, OM1	B
8 Relays Outputs, 4 High Break and 24 Status Inputs, OM1	C
8 Relays Outputs, 8 High Break and 16 Status Inputs, OM1	D
16 Relays Outputs and 24 Status Inputs, OM1 or OM2	E
16 Relays Outputs, 4 High Break and 16 Status Inputs, OM1 or OM2	F
8 Relays Outputs, 4 High Break and 24 Status Inputs, OM1 or OM2	G
8 Relays Outputs, 8 High Break and 16 Status Inputs, OM1 or OM2	H
Protocol Options	
K-Bus/Courier	1
IEC60870-5-103 (Via KITZ274)	
Courier (K-Bus), IEC60870-5-103 via KITZ274 (Supplied as Courier. KITZ274 to be ordered)	6
Additional IEC61850	
Mounting	
Flush/Panel Mounting with Harsh Env. Coating, with USB Port, Black and Silver Front Panel	S
Language	
Multilingual - English, French, German, Spanish	0
Multilingual - English, French, German, Russian	5
Software Issue	
Unless specified the latest version will be delivered	**
Customisation	
Default	0
Customer specific	A
Central Networks Version	5
Design Suffix	

* Only available with '60' software

** 21 Relay Outputs and 24 Status Inputs For Suffix 'B' devices

APPENDIX B

SETTINGS AND SIGNALS

Tables, containing a full list of settings for each model, are provided in a separate Excel file attached as an embedded resource. To access the spreadsheet file, click on the button below.

Note:
An Open File dialogue box may open with a warning message about potential harm from programs, macros or viruses. The file supplied does not contain any harmful content, and may be safely opened.

Settings and Signals

APPENDIX C

WIRING DIAGRAMS

Model	Input/Output Options and Case Size Compatibility	Drawing-Sheet	Issue
All	Comms Options MiCOM Px40 Platform	10Px4001-1 10Px4001-2	N B
P741	Busbar Protection Central Unit P741 (80TE)	10P74101-1	I
P742	Busbar Protection Peripheral Unit P742 (40TE)	10P74201-1	I
	Busbar Protection Peripheral Unit P742 (40TE)	10P74202-1	F
P743	Busbar Protection Peripheral Unit P743 (60TE)	10P74301-1	I
	Busbar Protection P743 Peripheral Unit (60TE)	10P74302-1	G
	Busbar Protection Peripheral Unit P743 (60TE)	10P74303-1	F
	Busbar Protection Peripheral Unit P743 (60TE)	10P74304-1	F
	Busbar Protection Peripheral Unit P743 (60TE)	10P74305-1	F
	Busbar Protection Peripheral Unit P743 (60TE) with NCIT	10P74307-1	E
	Busbar Protection Peripheral Unit P743 (60TE) with NCIT	10P74308-1	E
	Busbar Protection Peripheral Unit P743 (60TE) with NCIT	10P74309-1	E
	Busbar Protection Peripheral Unit P743 (60TE) with NCIT	10P74310-1	E

* When selecting the applicable wiring diagram(s), refer to appropriate model's CORTEC.

Model	Assembly Diagram Title	Drawing-Sheet	Issue
P741	Final Assembly - P741 Busbar Central Unit (80TE)	GN0371-101	A.1
P742	Final Assembly - 40TE P742 Busbar Peripheral Unit	GN0372-101	A.1
P743	Final Assembly - P741 Busbar Central Unit (80TE)	GN0373-101	A.1

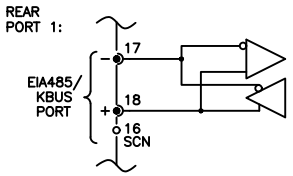

NOTE: FOR TERMINAL BLOCK CONNECTION REFER TO RELEVANT EXTERNAL CONNECTION DIAGRAM. (ALWAYS ON PSU BLOCK)

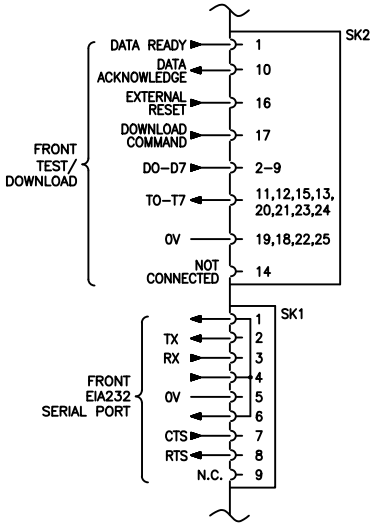

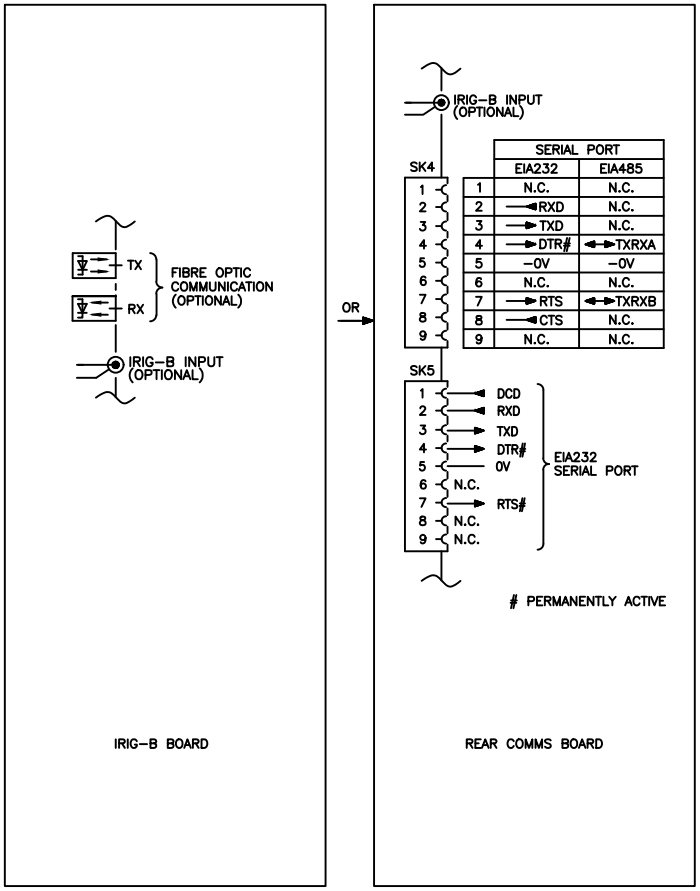

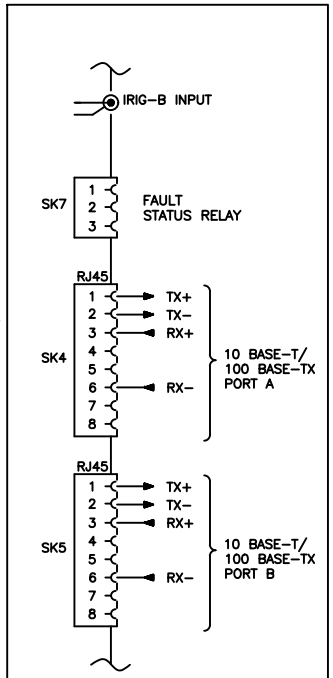

REDUNDANT COPPER PORT ETHERNET BOARD

SK7 STATUS		
Pin	Closed	Open
1 - 2	CHANNEL A FAIL	CHANNEL A OK
2 - 3	CHANNEL B FAIL	CHANNEL B OK

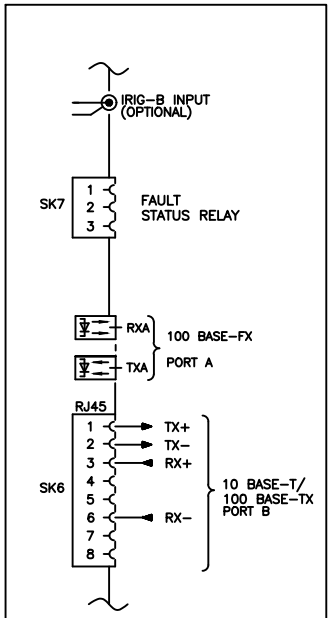

REDUNDANT ETHERNET BOARD WITH MIXED MEDIA OR SINGLE PORT ETHERNET BOARD

SK7 STATUS		
Pin	Closed	Open
1 - 2	CHANNEL A FAIL	CHANNEL A OK
2 - 3	CHANNEL B FAIL	CHANNEL B OK

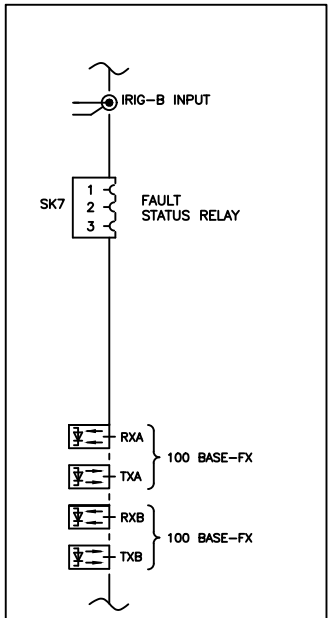

DUAL PORT REDUNDANT ETHERNET BOARD

SK7 STATUS		
Pin	Closed	Open
1 - 2	CHANNEL A FAIL	CHANNEL A OK
2 - 3	CHANNEL B FAIL	CHANNEL B OK

Issue:	Status:	Revision Notes:	Title:
N	Approved	CID008567 - Outline update only	EXTERNAL CONNECTION DIAGRAM: COMMS OPTIONS MICOM Px40 PLATFORM
Date: 10/10/2024	Name: S Burton	PROPRIETARY AND CONFIDENTIAL INFORMATION	Drg No: 10PX4001
Date:	Chkd:		PLM No: A20022917

This document is the property of GE Vernova (GEV) and contains proprietary information of GEV. This document is loaned on the express condition that neither it nor the information contained therein shall be disclosed to others without the express written consent of GEV, and that the information shall be used by the recipient only as approved expressly by GEV. This document shall be returned to GEV upon its request. This document may be subject to certain restrictions under U.S. export control laws and regulations. © GE VERNOVA Company, GEV CONFIDENTIAL UNPUBLISHED WORK.

Sht: 1
Next Sht: 2

GE VERNOVA

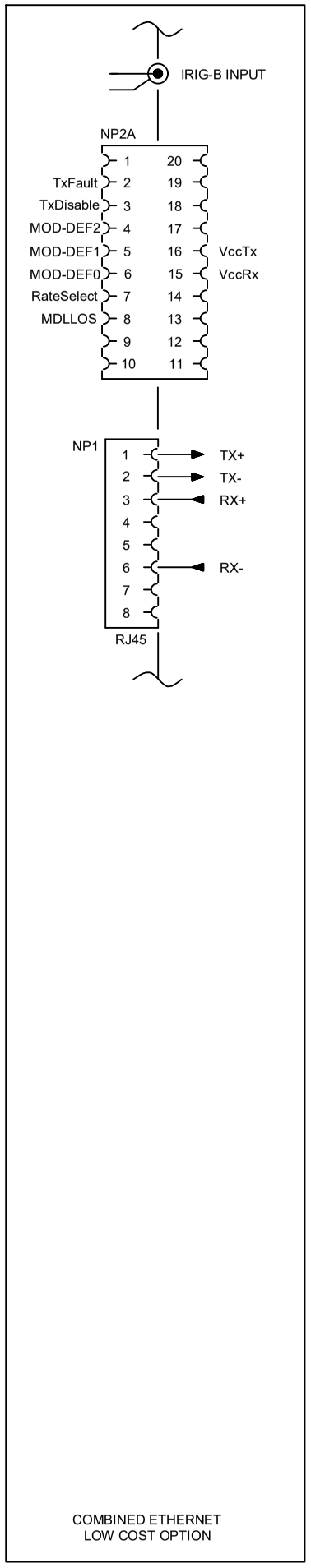

COMBINED ETHERNET
LOW COST OPTION

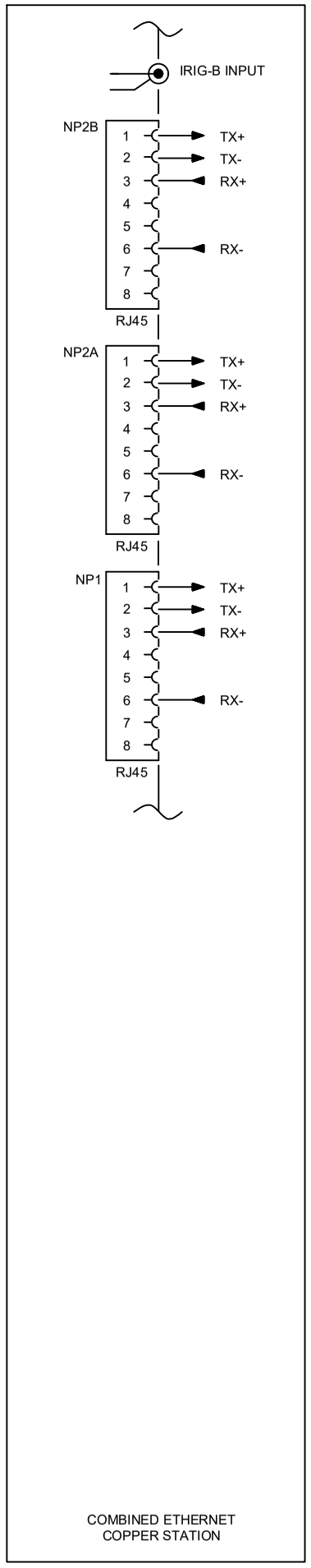

COMBINED ETHERNET
COPPER STATION

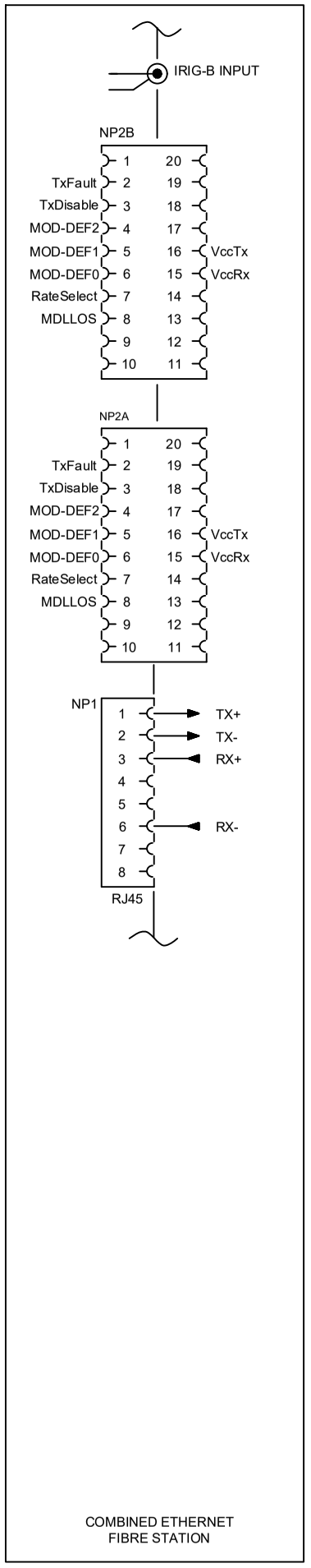

COMBINED ETHERNET
FIBRE STATION

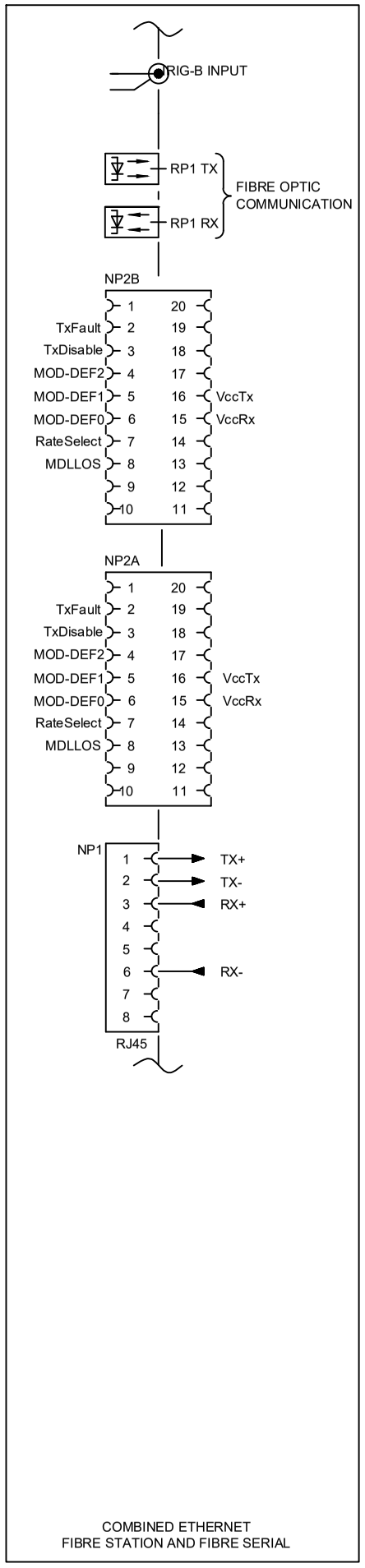

COMBINED ETHERNET
FIBRE STATION AND FIBRE SERIAL

Issue: B	Status: **Approved**	Revision Notes: CID008567 - Outline update only	Title: EXTERNAL CONNECTION DIAGRAM COMMS OPTIONS MICOM Px40			
Date: 10/10/2024	Name: S Burton	PROPRIETARY AND CONFIDENTIAL INFORMATION This document is the property of GE Vernova (GEV) and contains proprietary information of GEV. This document is loaned on the express condition that neither it nor the information contained therein shall be disclosed to others without the express written consent of GEV, and that the information shall be used by the recipient only as approved expressly by GEV. This document shall be returned to GEV upon its request. This document may be subject to certain restrictions under U.S. export control laws and regulations. © GE VERNOVA Company, GEV CONFIDENTIAL UNPUBLISHED WORK.	Drg No: **10PX4001**	PLM No: A20095995	Sht: 2	GE VERNOVA
Date:	Chkd:				Next Sht: -	

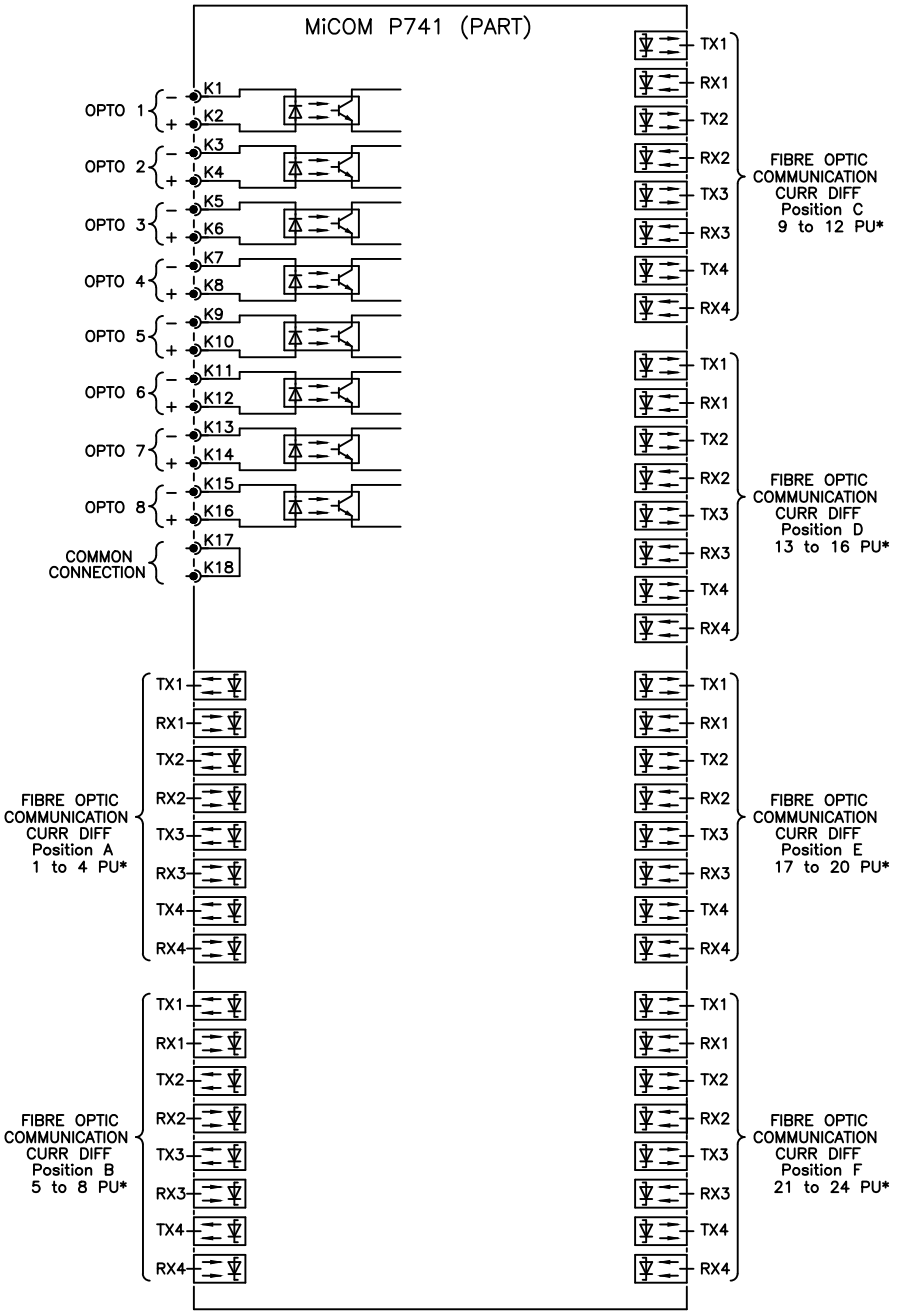

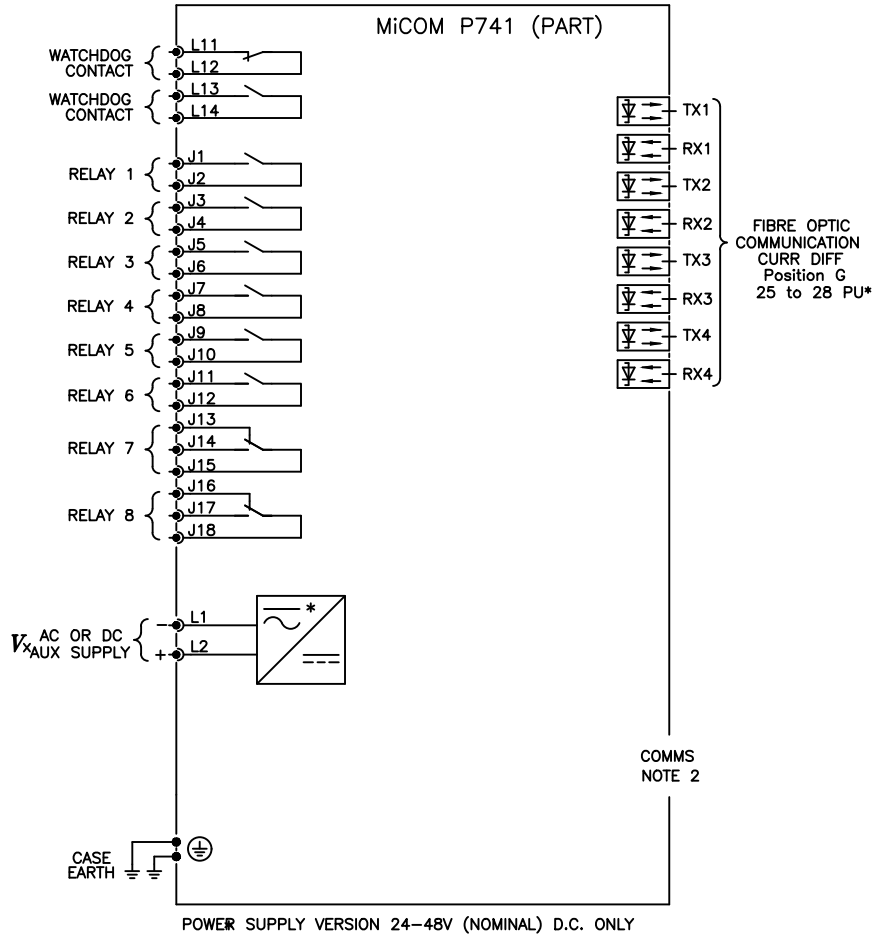

NOTE 1.

PIN TERMINAL (P.C.B. TYPE)

9–WAY & 25–WAY FEMALE D–TYPE SOCKET

2. FOR COMMS OPTIONS SEE DRAWING 10Px4001

Issue:	Status:	Revision Notes:	Title:
I	**Approved**	CID008567 - Outline update only	EXTERNAL CONNECTION DIAGRAM: BUSBAR PROTECTION CENTRAL UNIT P741 (80TE)
Date: 10/10/2024	Name: S Burton	PROPRIETARY AND CONFIDENTIAL INFORMATION This document is the property of GE Vernova (GEV) and contains proprietary information of GEV. This document is loaned on the express condition that neither it nor the information contained therein shall be disclosed to others without the express written consent of GEV, and that the information shall be used by the recipient only as approved expressly by GEV. This document shall be returned to GEV upon its request. This document may be subject to certain restrictions under U.S. export control laws and regulations. © GE VERNOVA Company, GEV CONFIDENTIAL UNPUBLISHED WORK.	Drg No: **10P74101**
Date:	Chkd:		

PLM No:	Sht: 1	GE VERNOVA
A20057312	Next Sht: -	

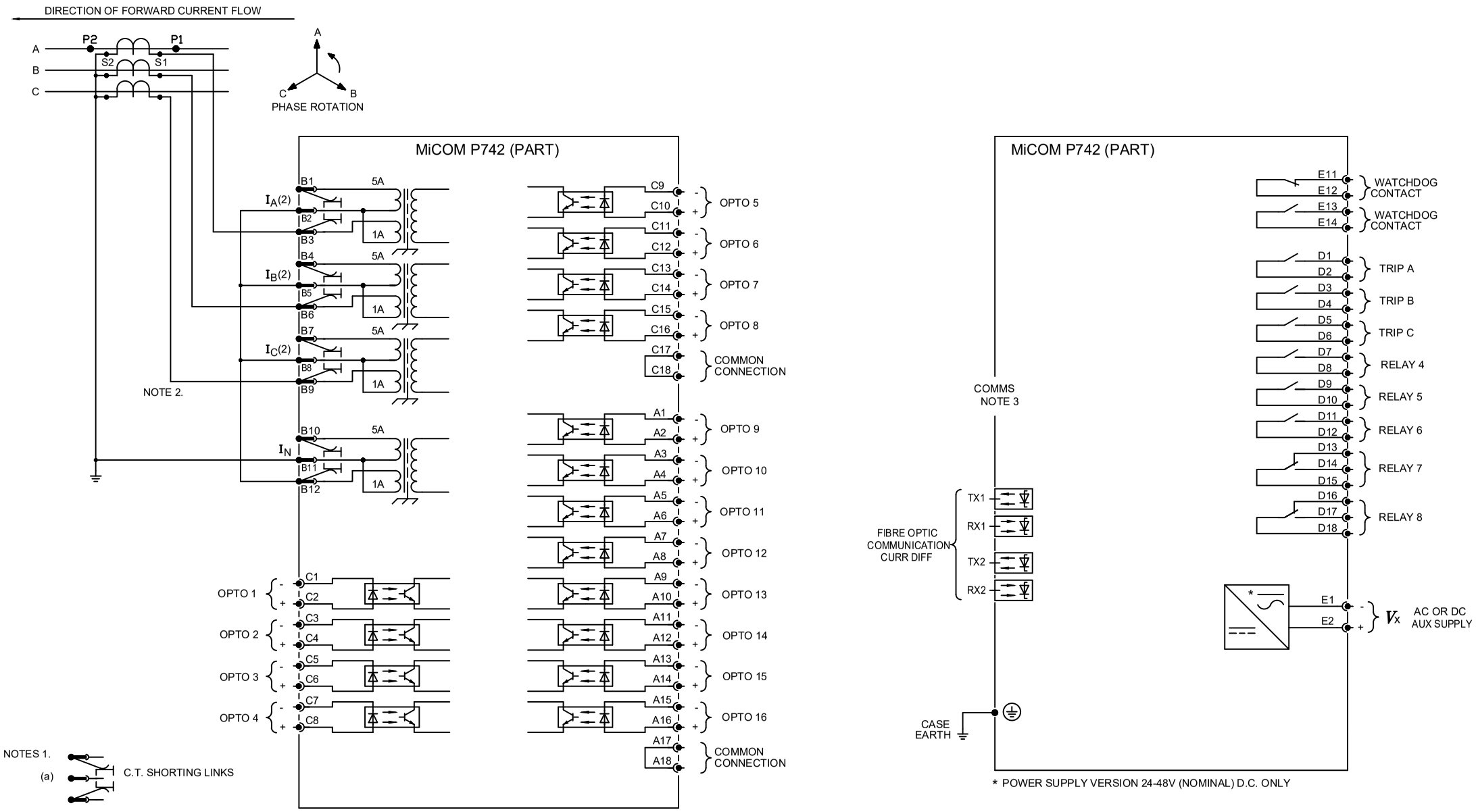

Issue:	Status:	Revision Notes:	Title:	
I	**Approved**	CID008567 - Outline update only	EXTERNAL CONNECTION DIAGRAM: BUSBAR PROTECTION PERIPHERAL UNIT P742 (40TE)	
Date: 10/10/2024	Name: S Burton	PROPRIETARY AND CONFIDENTIAL INFORMATION This document is the property of GE Vernova (GEV) and contains proprietary information of GEV. This document is loaned on the express condition that neither it nor the information contained therein shall be disclosed to others without the express written consent of GEV, and that the information shall be used by the recipient only as approved expressly by GEV. This document shall be returned to GEV upon its request. This document may be subject to certain restrictions under U.S. export control laws and regulations. © GE VERNOVA Company, GEV CONFIDENTIAL UNPUBLISHED WORK.	Drg No: **10P74201**	PLM No: A20057329	Sht: 1
Date:	Chkd:			Next Sht: -

GE VERNOVA

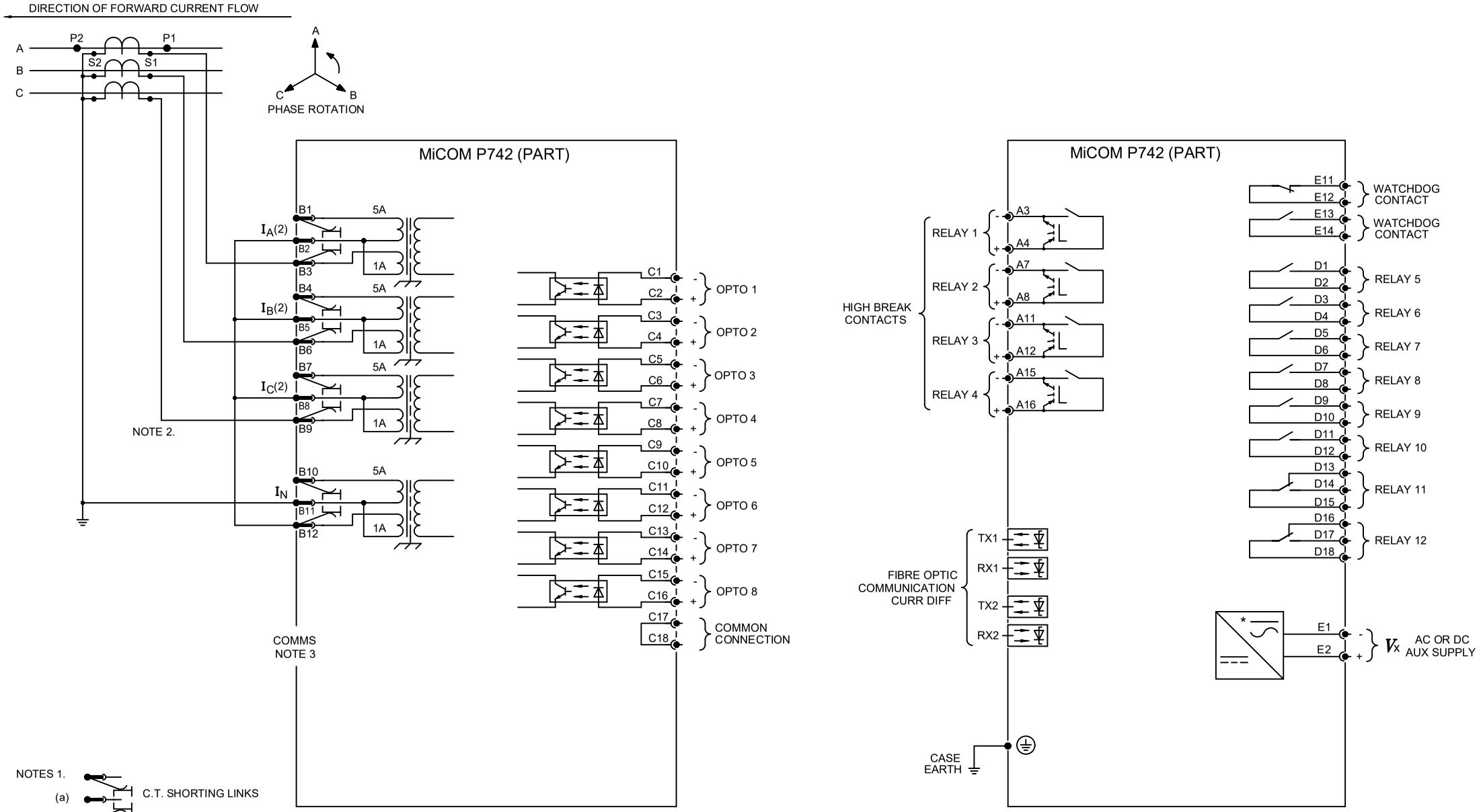

NOTES 1.

(a) C.T. SHORTING LINKS

(b) PIN TERMINAL (P.C.B. TYPE)

2. C.T. CONNECTIONS ARE SHOWN 1A CONNECTED AND ARE TYPICAL ONLY.

3. FOR COMMS OPTIONS SEE DRAWING 10Px4001.

Issue:	Status:	Revision Notes:	Title:			
F	**Approved**	CID008567 - Outline update only	EXTERNAL CONNECTION DIAGRAM: BUSBAR PROTECTION PERIPHERAL UNIT P742 (40TE)			
Date: 10/10/2024	Name: S Burton	PROPRIETARY AND CONFIDENTIAL INFORMATION This document is the property of GE Vernova (GEV) and contains proprietary information of GEV. This document is loaned on the express condition that neither it nor the information contained therein shall be disclosed to others without the express written consent of GEV, and that the information shall be used by the recipient only as approved expressly by GEV. This document shall be returned to GEV upon its request. This document may be subject to certain restrictions under U.S. export control laws and regulations. © GE VERNOVA Company, GEV CONFIDENTIAL UNPUBLISHED WORK.	Drg No:	**10P74202**	PLM No: A20057887	Sht: 1
Date:	Chkd:					Next Sht: -

GE VERNOVA

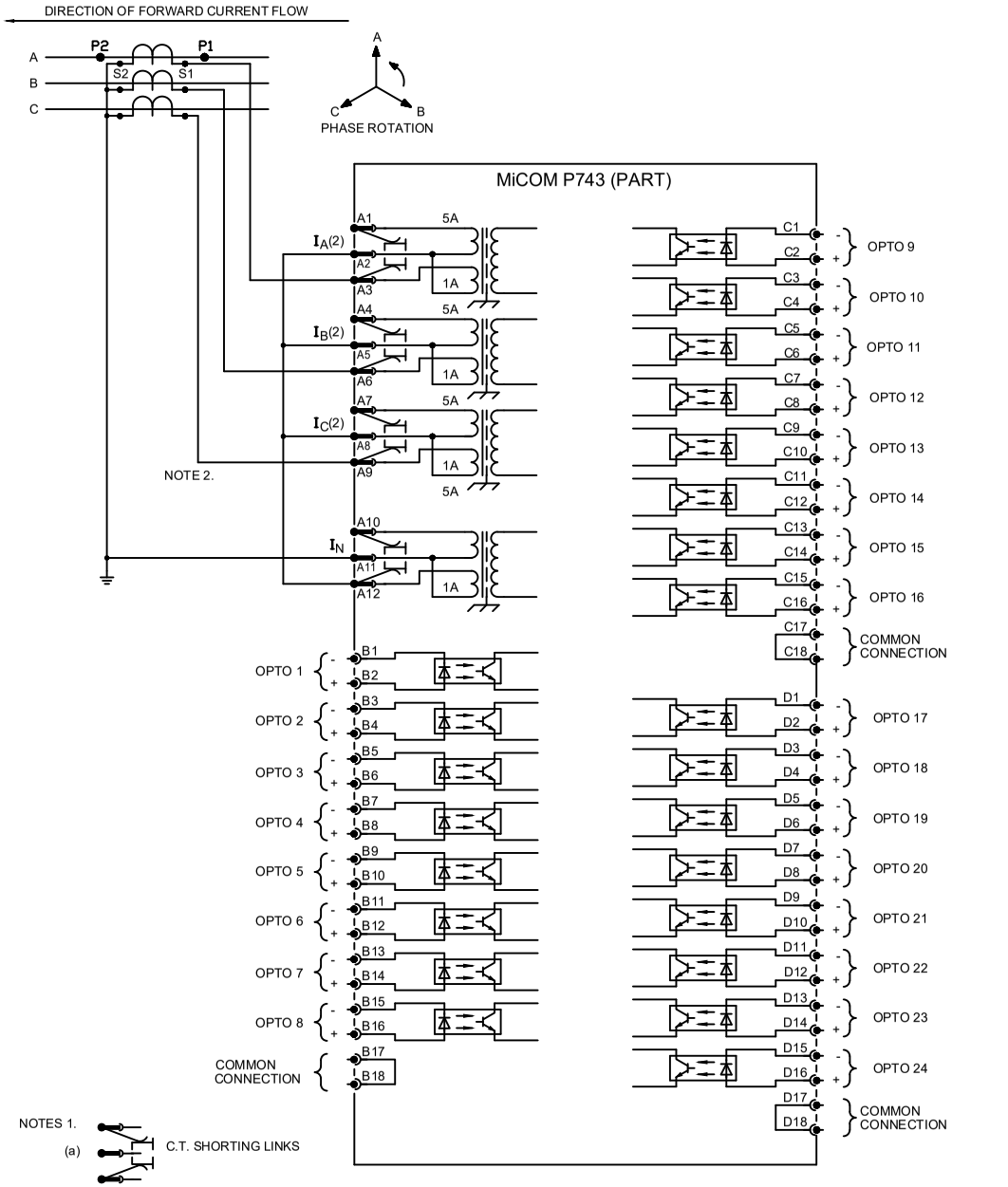

2. C.T. CONNECTIONS ARE SHOWN 1A CONNECTED AND ARE TYPICAL ONLY.

3. FOR COMMS OPTIONS SEE DRAWING 10Px4001

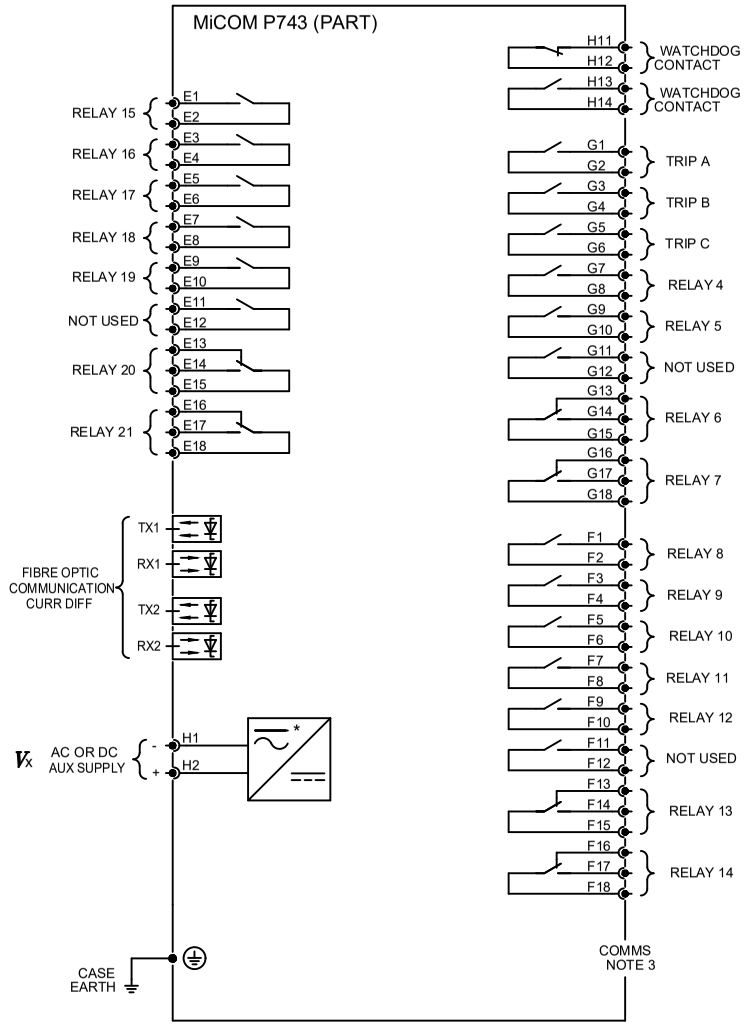

* POWER SUPPLY VERSION 24-48V (NOMINAL) D.C. ONLY

Issue:	Status:	Revision Notes:	Title:
I	**Approved**	CID008567 - Outline update only	EXTERNAL CONNECTION DIAGRAM: BUSBAR PROTECTION PERIPHERAL UNIT P743 (60TE)

Date: 10/10/2024	Name: S Burton	PROPRIETARY AND CONFIDENTIAL INFORMATION This document is the property of GE Vernova (GEV) and contains proprietary information of GEV. This document is loaned on the express condition that neither it nor the information contained therein shall be disclosed to others without the express written consent of GEV, and that the information shall be used by the recipient only as approved expressly by GEV. This document shall be returned to GEV upon its request. This document may be subject to certain restrictions under U.S. export control laws and regulations. © GE VERNOVA Company, GEV CONFIDENTIAL UNPUBLISHED WORK.	Drg No: **10P74301**	PLM No: A20057279	Sht: 1
Date:	Chkd:				Next Sht: -

GE VERNOVA

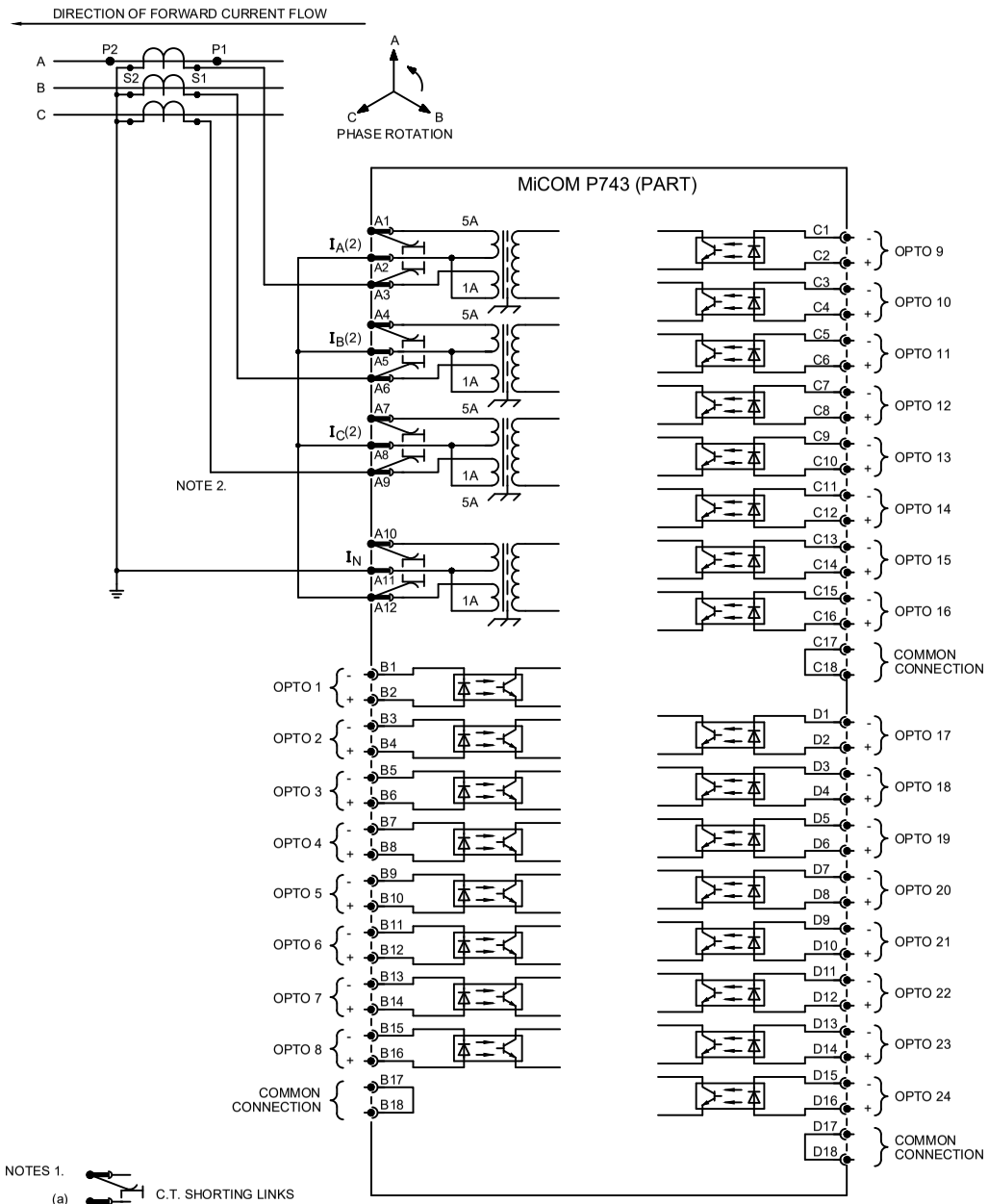

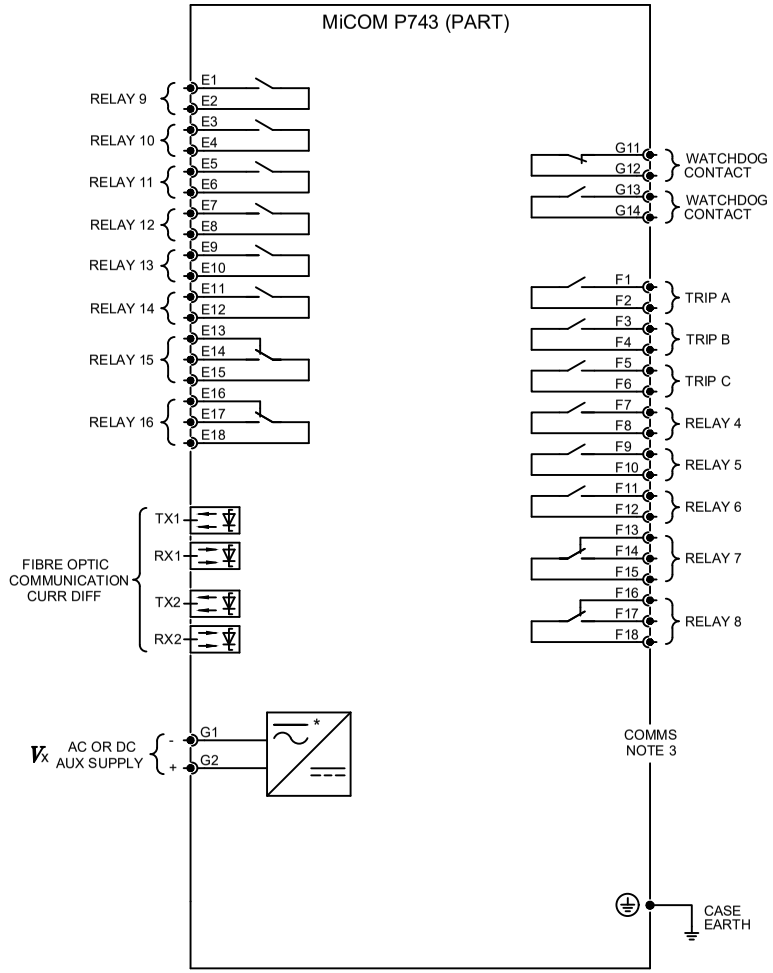

* POWER SUPPLY VERSION 24-48V (NOMINAL) D.C. ONLY

NOTES 1.

(a) C.T. SHORTING LINKS

(b) PIN TERMINAL (P.C.B. TYPE)

2. C.T. CONNECTIONS ARE SHOWN 1A CONNECTED AND ARE TYPICAL ONLY.

3. FOR COMMS OPTIONS SEE DRAWING 10Px4001

Issue:	Status:	Revision Notes:	Title:
G	**Approved**	CID008567 - Outline update only	EXTERNAL CONNECTION DIAGRAM: BUSBAR PROTECTION P743 PERIPHERAL UNIT (60TE)
Date: 10/10/2024	Name: S Burton	PROPRIETARY AND CONFIDENTIAL INFORMATION This document is the property of GE Vernova (GEV) and contains proprietary information of GEV. This document is loaned on the express condition that neither it nor the information contained therein shall be disclosed to others without the express written consent of GEV, and that the information shall be used by the recipient only as approved expressly by GEV. This document shall be returned to GEV upon its request. This document may be subject to certain restrictions under U.S. export control laws and regulations. © GE VERNOVA Company, GEV CONFIDENTIAL UNPUBLISHED WORK.	Drg No: **10P74302**
Date:	Chkd:		

PLM No:	Sht:	
A20063981	1	GE VERNOVA
	Next Sht: -	

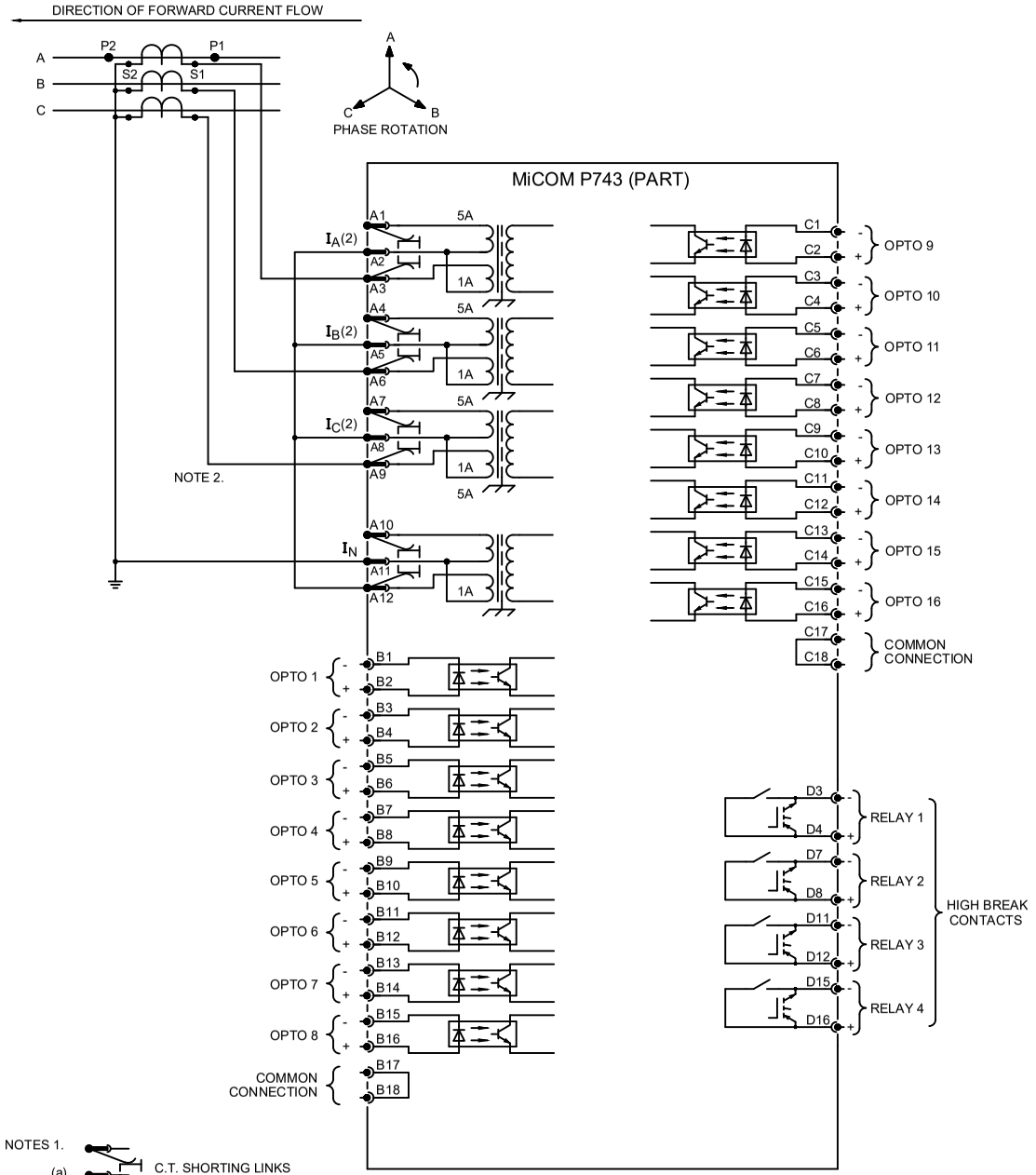

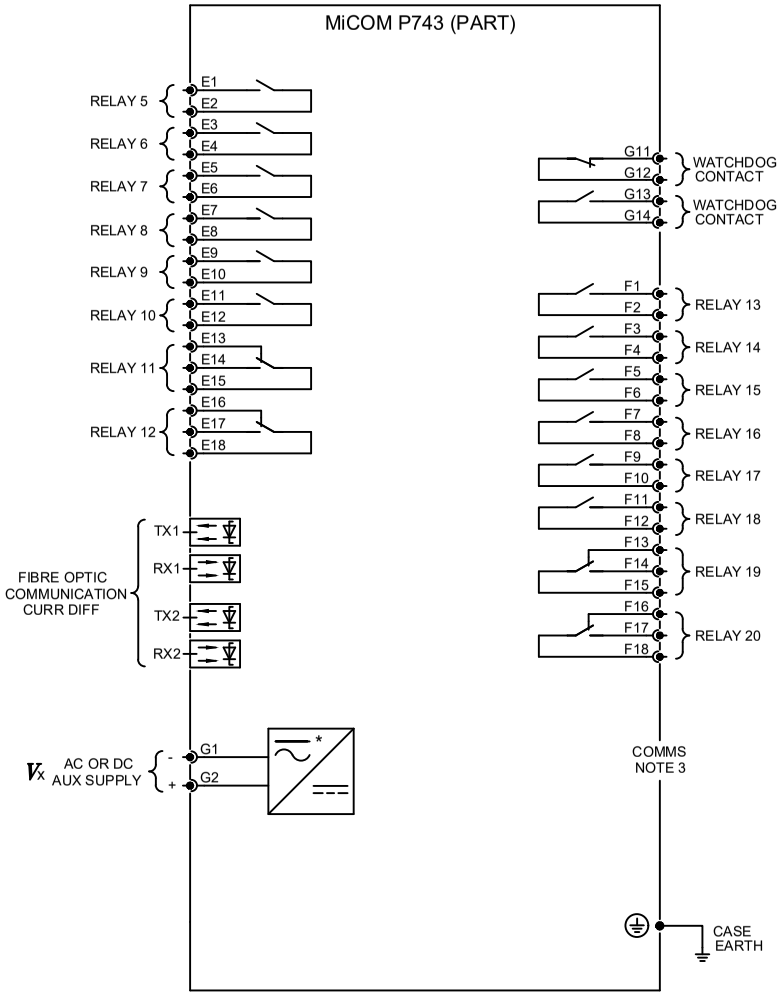

* POWER SUPPLY VERSION 24-48V (NOMINAL) D.C. ONLY

NOTES 1.

(a) C.T. SHORTING LINKS

(b) PIN TERMINAL (P.C.B. TYPE)

2. C.T. CONNECTIONS ARE SHOWN 1A CONNECTED AND ARE TYPICAL ONLY.

3. FOR COMMS OPTIONS SEE DRAWING 10Px4001

Issue:	Status:	Revision Notes:	Title:	
F	**Approved**	CID008567 - Outline update only	EXTERNAL CONNECTION DIAGRAM: BUSBAR PROTECTION PERIPHERAL UNIT P743 (60TE)	
Date: 10/10/2024	Name: S Burton	PROPRIETARY AND CONFIDENTIAL INFORMATION This document is the property of GE Vernova (GEV) and contains proprietary information of GEV. This document is loaned on the express condition that neither it nor the information contained therein shall be disclosed to others without the express written consent of GEV, and that the information shall be used by the recipient only as approved expressly by GEV. This document shall be returned to GEV upon its request. This document may be subject to certain restrictions under U.S. export control laws and regulations. © GE VERNOVA Company, GEV CONFIDENTIAL UNPUBLISHED WORK.	Drg No: **10P74303**	PLM No: A20057868
Date:	Chkd:			Sht: 1 / Next Sht: -

GE VERNOVA

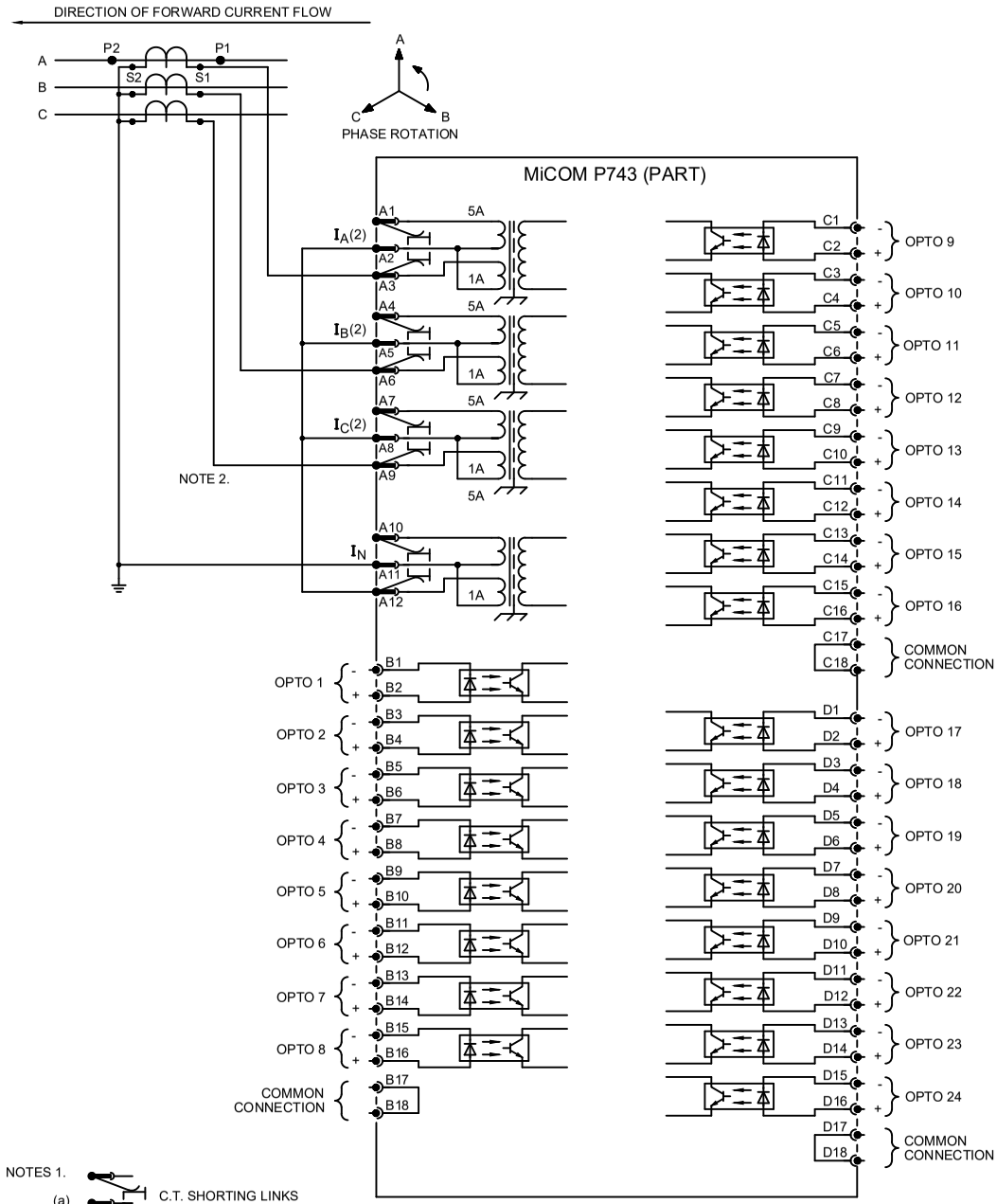

2. C.T. CONNECTIONS ARE SHOWN 1A CONNECTED AND ARE TYPICAL ONLY.
3. FOR COMMS OPTIONS SEE DRAWING 10Px4001

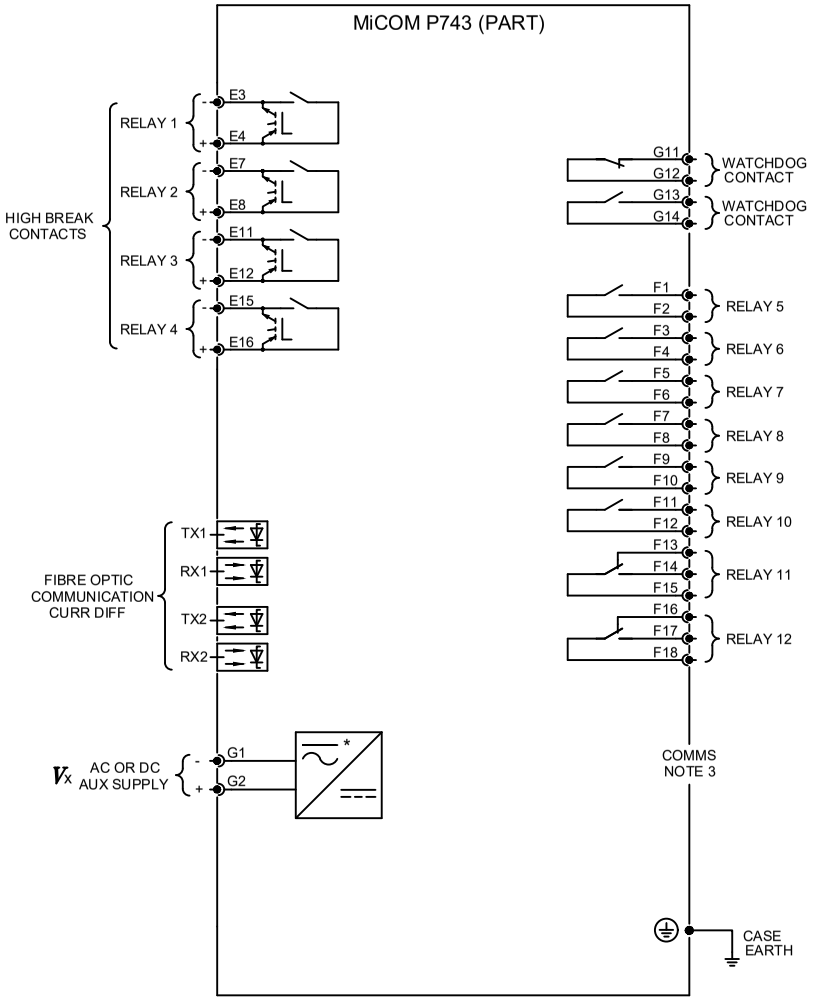

* POWER SUPPLY VERSION 24-48V (NOMINAL) D.C. ONLY

Issue:	Status:	Revision Notes:	Title:	
F	**Approved**	CID008567 - Outline update only	EXTERNAL CONNECTION DIAGRAM: BUSBAR PROTECTION PERIPHERAL UNIT P743 (60TE)	
Date: 10/10/2024	Name: S Burton	PROPRIETARY AND CONFIDENTIAL INFORMATION This document is the property of GE Vernova (GEV) and contains proprietary information of GEV. This document is loaned on the express condition that neither it nor the information contained therein shall be disclosed to others without the express written consent of GEV, and that the information shall be used by the recipient only as approved expressly by GEV. This document shall be returned to GEV upon its request. This document may be subject to certain restrictions under U.S. export control laws and regulations. © GE VERNOVA Company, GEV CONFIDENTIAL UNPUBLISHED WORK.	Drg No: **10P74304**	PLM No: A20057848
Date:	Chkd:			Sht: 1 / Next Sht: -

GE VERNOVA

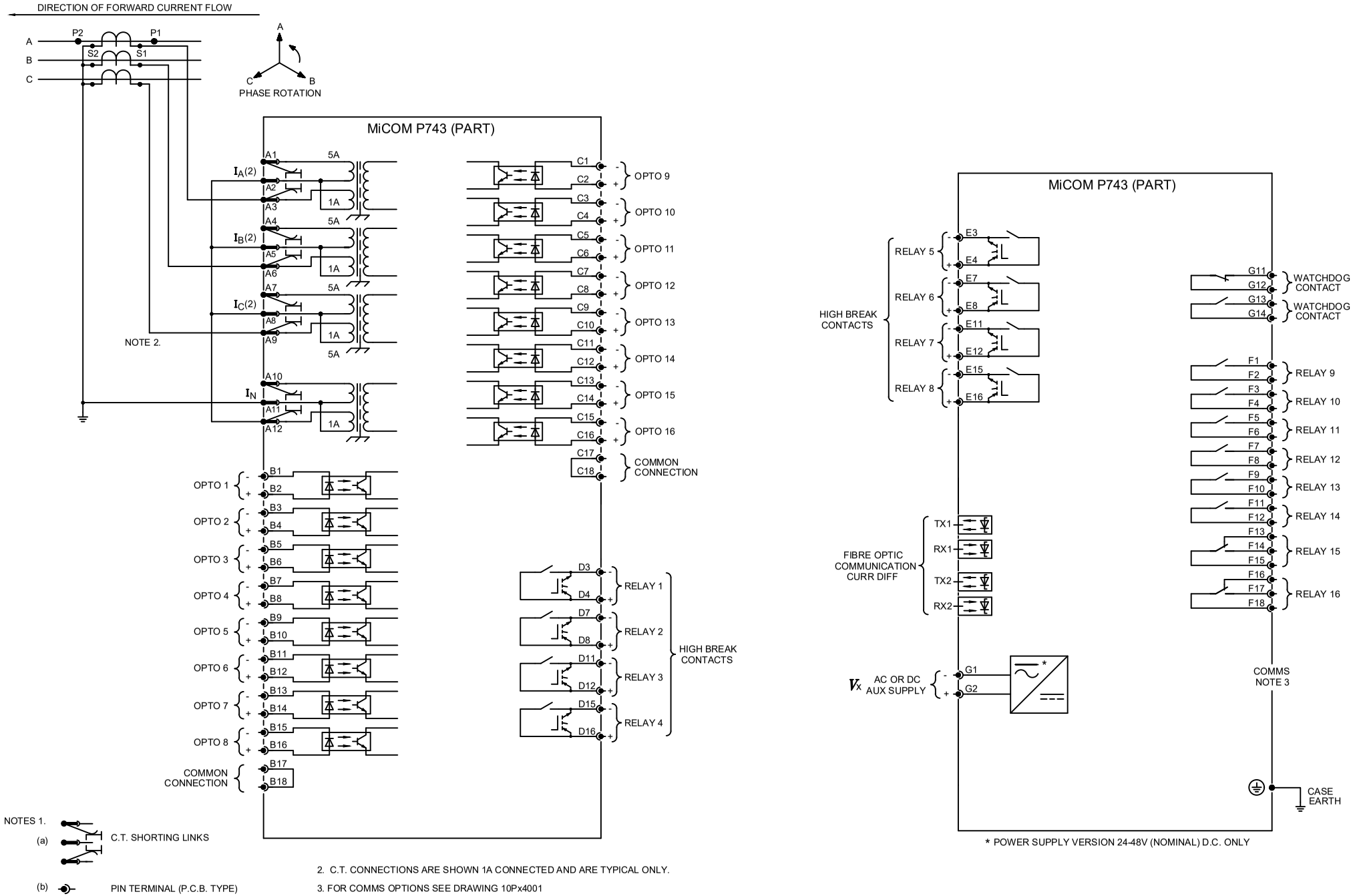

Issue:	Status:	Revision Notes:	Title:	
F	**Approved**	CID008567 - Outline update only	EXTERNAL CONNECTION DIAGRAM: BUSBAR PROTECTION PERIPHERAL UNIT P743 (60TE)	
Date: 10/10/2024	Name: S Burton	PROPRIETARY AND CONFIDENTIAL INFORMATION This document is the property of GE Vernova (GEV) and contains proprietary information of GEV. This document is loaned on the express condition that neither it nor the information contained therein shall be disclosed to others without the express written consent of GEV, and that the information shall be used by the recipient only as approved expressly by GEV. This document shall be returned to GEV upon its request. This document may be subject to certain restrictions under U.S. export control laws and regulations. © GE VERNOVA Company, GEV CONFIDENTIAL UNPUBLISHED WORK.	Drg No: **10P74305**	PLM No: A20057864
Date:	Chkd:			Sht: 1 / Next Sht: -

GE VERNOVA

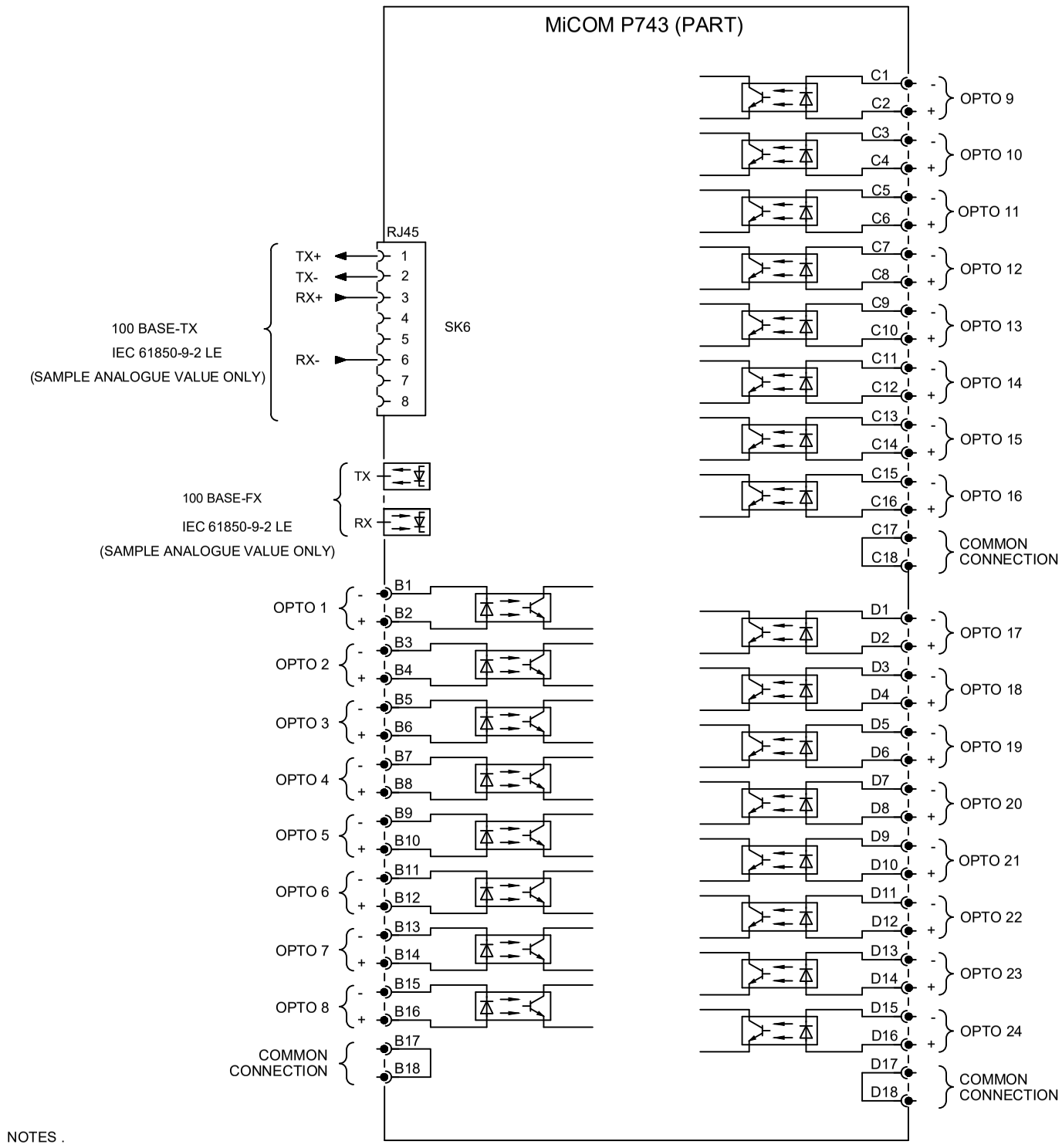

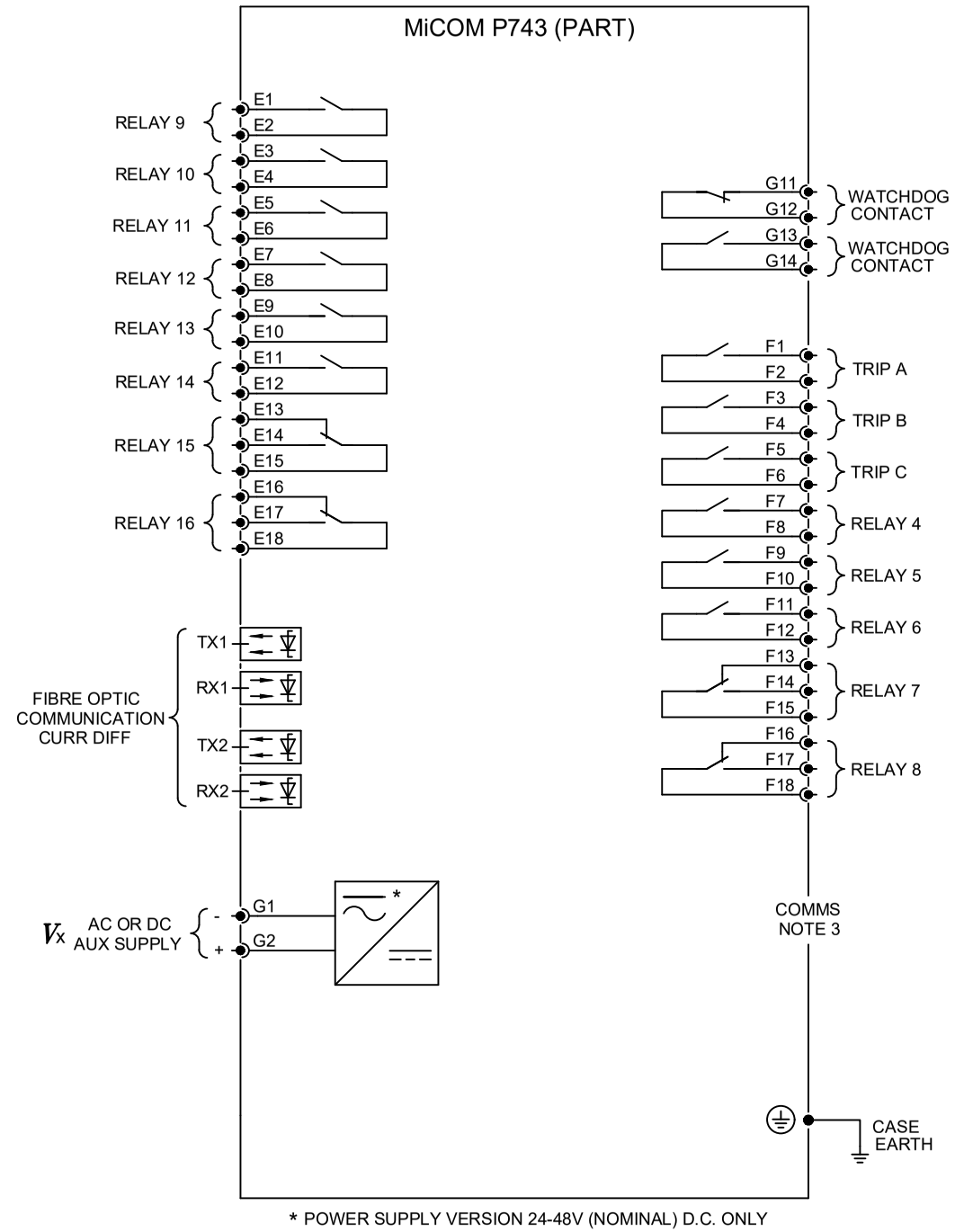

NOTES .

1. PIN TERMINAL (P.C.B. TYPE)
2. FOR COMMS OPTIONS SEE DRAWING 10Px4001
2. COPPER PORT IS FOR SERVICE ONLY, NOT RECOMMENDED FOR PERMANENT CONNECTION.

Issue:	Status:	Revision Notes:	Title:	
E	**Approved**	CID008567 - Outline update only	EXTERNAL CONNECTION DIAGRAM: BUSBAR PROTECTION PERIPHERAL UNIT P743 (60TE) WITH NCIT	
Date: 10/10/2024	Name: S Burton	PROPRIETARY AND CONFIDENTIAL INFORMATION This document is the property of GE Vernova (GEV) and contains proprietary information of GEV. This document is loaned on the express condition that neither it nor the information contained therein shall be disclosed to others without the express written consent of GEV, and that the information shall be used by the recipient only as approved expressly by GEV. This document shall be returned to GEV upon its request. This document may be subject to certain restrictions under U.S. export control laws and regulations. © GE VERNOVA Company, GEV CONFIDENTIAL UNPUBLISHED WORK.	Drg No: **10P74307**	PLM No: A20065302 / Sht: 1 / Next Sht: -
Date:	Chkd:			GE VERNOVA

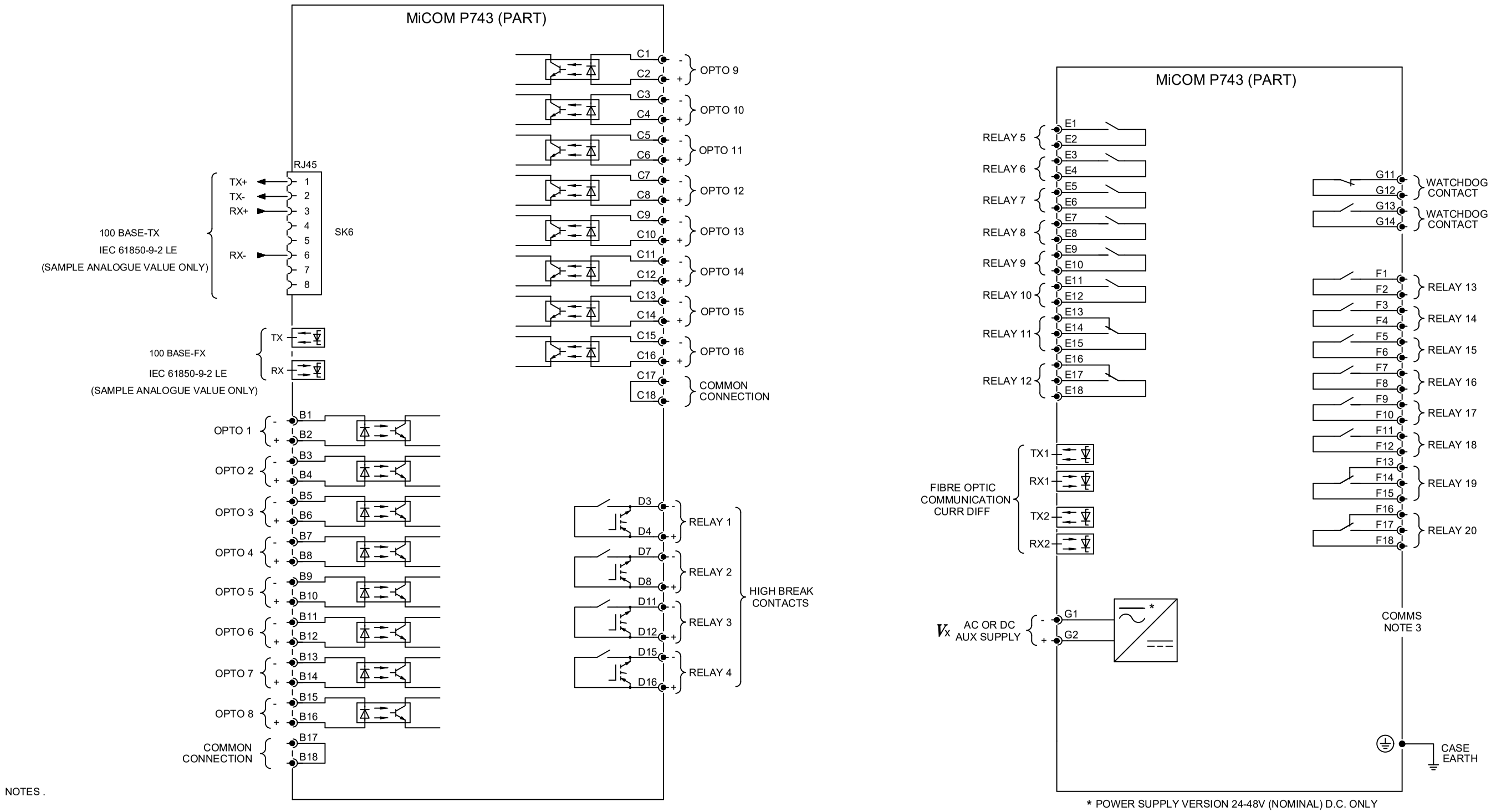

NOTES .

1. PIN TERMINAL (P.C.B. TYPE)
2. FOR COMMS OPTIONS SEE DRAWING 10Px4001
3. COPPER PORT IS FOR SERVICE ONLY, NOT RECOMMENDED FOR PERMANENT CONNECTION.

Issue:	Status:	Revision Notes:	Title:	
E	**Approved**	CID008567 - Outline update only	EXTERNAL CONNECTION DIAGRAM: BUSBAR PROTECTION PERIPHERAL UNIT P743 (60TE) WITH NCIT	
Date: 10/10/2024	Name: S Burton	PROPRIETARY AND CONFIDENTIAL INFORMATION This document is the property of GE Vernova (GEV) and contains proprietary information of GEV. This document is loaned on the express condition that neither it nor the information contained therein shall be disclosed to others without the express written consent of GEV, and that the information shall be used by the recipient only as approved expressly by GEV. This document shall be returned to GEV upon its request. This document may be subject to certain restrictions under U.S. export control laws and regulations. © GE VERNOVA Company, GEV CONFIDENTIAL UNPUBLISHED WORK.	Drg No: **10P74308**	PLM No: A20065275 / Sht: 1 / Next Sht: -
Date:	Chkd:			GE VERNOVA

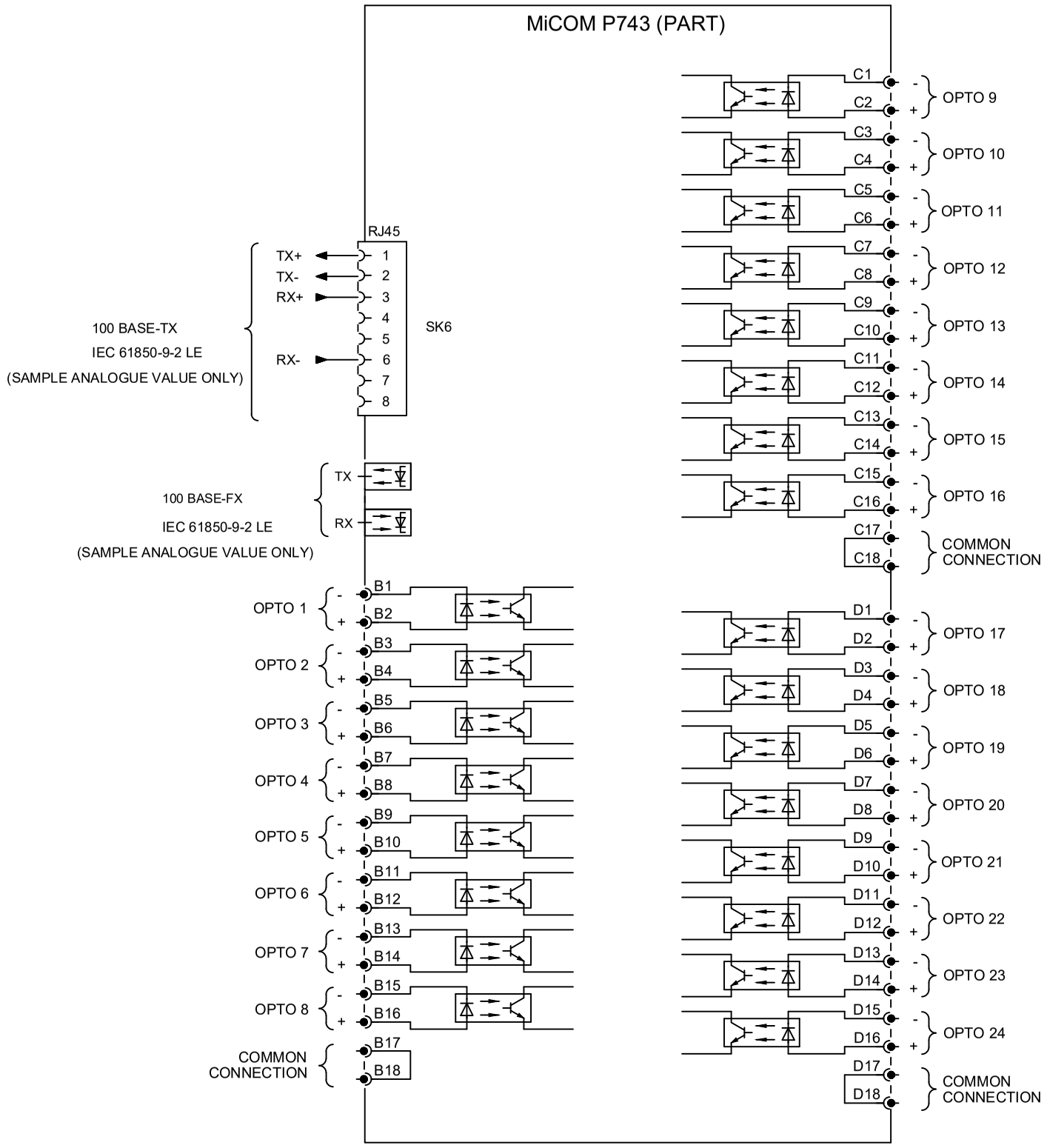

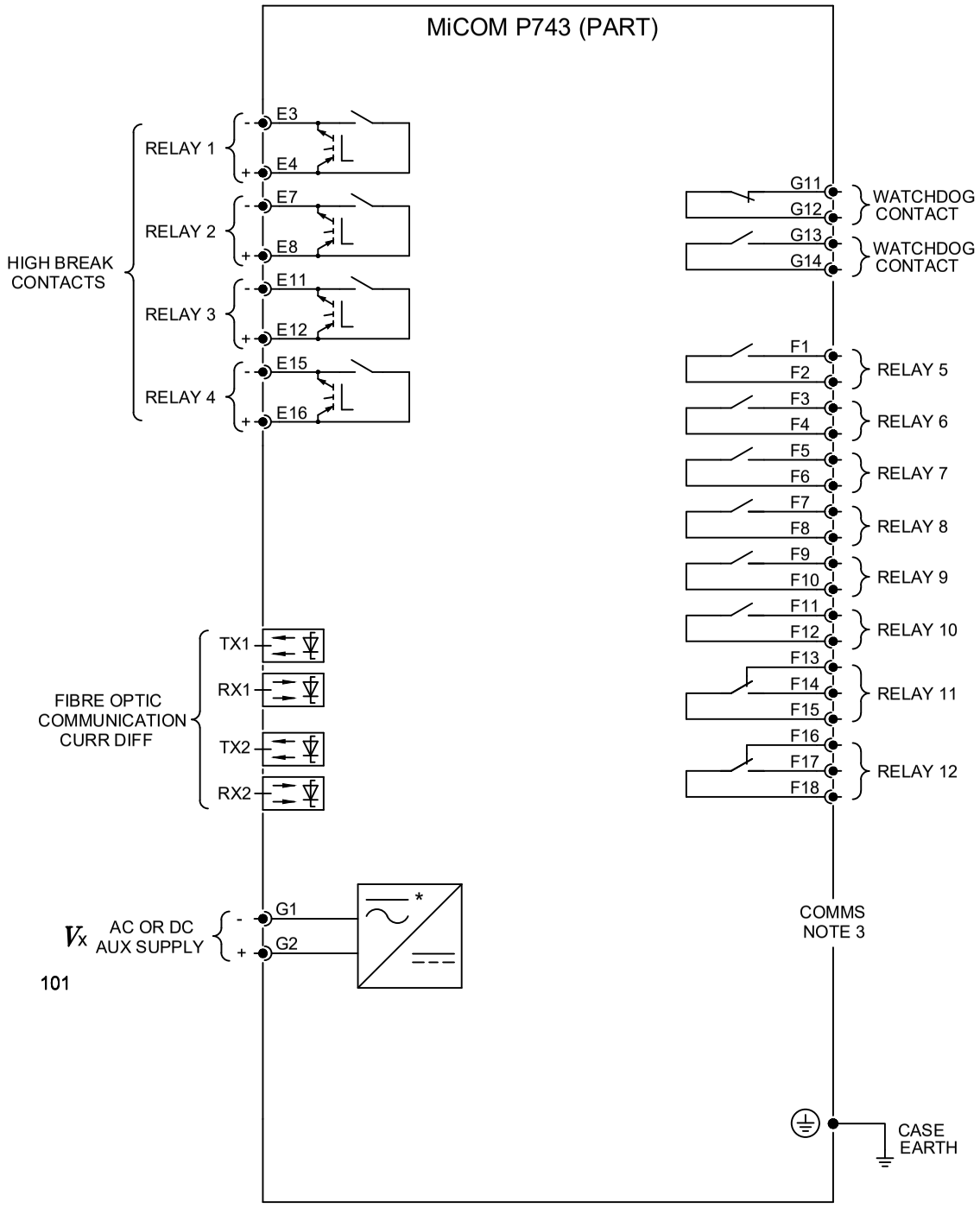

* POWER SUPPLY VERSION 24-48V (NOMINAL) D.C. ONLY

NOTES .

1. PIN TERMINAL (P.C.B. TYPE)
2. FOR COMMS OPTIONS SEE DRAWING 10Px4001
3. COPPER PORT IS FOR SERVICE ONLY, NOT RECOMMENDED FOR PERMANENT CONNECTION.

Issue:	Status:	Revision Notes:	Title:	
E	**In Work**	CID008567 - Outline update only	EXTERNAL CONNECTION DIAGRAM: BUSBAR PROTECTION PERIPHERAL UNIT P743 (60TE) WITH NCIT	
Date: 10/10/2024	Name: S Burton	PROPRIETARY AND CONFIDENTIAL INFORMATION This document is the property of GE Vernova (GEV) and contains proprietary information of GEV. This document is loaned on the express condition that neither it nor the information contained therein shall be disclosed to others without the express written consent of GEV, and that the information shall be used by the recipient only as approved expressly by GEV. This document shall be returned to GEV upon its request. This document may be subject to certain restrictions under U.S. export control laws and regulations. © GE VERNOVA Company, GEV CONFIDENTIAL UNPUBLISHED WORK.	Drg No: **10P74309**	PLM No: A20065271 / Sht: 1 / Next Sht: -
Date:	Chkd:			GE VERNOVA

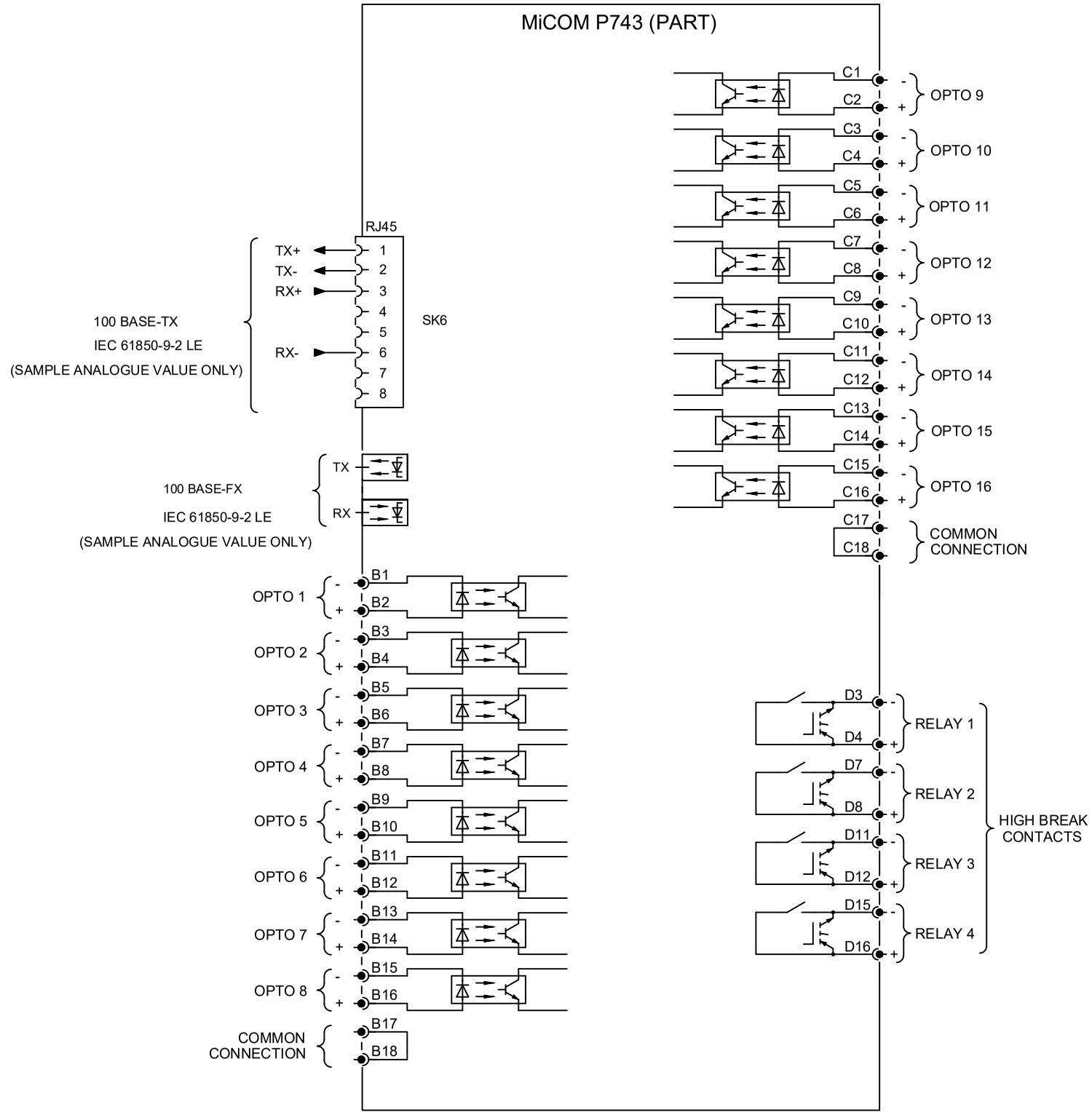

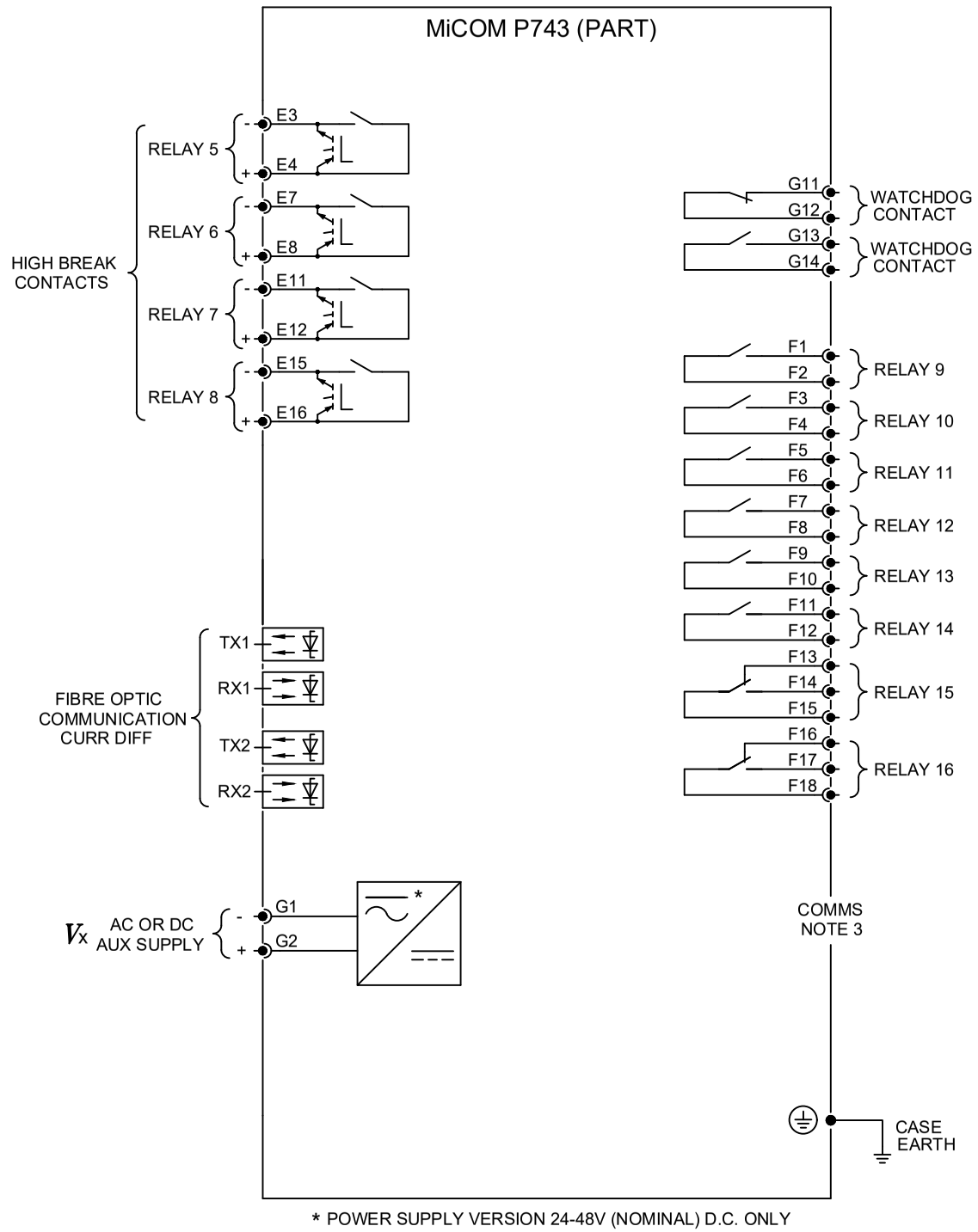

NOTES .

1. PIN TERMINAL (P.C.B. TYPE)
2. FOR COMMS OPTIONS SEE DRAWING 10Px4001
3. COPPER PORT IS FOR SERVICE ONLY, NOT RECOMMENDED FOR PERMANENT CONNECTION.

Issue:	Status:	Revision Notes:	Title:	
E	**Approved**	CID008567 - Outline update only	EXTERNAL CONNECTION DIAGRAM: BUSBAR PROTECTION PERIPHERAL UNIT P743 (60TE) WITH NCIT	
Date: 10/10/2024	Name: S Burton	PROPRIETARY AND CONFIDENTIAL INFORMATION This document is the property of GE Vernova (GEV) and contains proprietary information of GEV. This document is loaned on the express condition that neither it nor the information contained therein shall be disclosed to others without the express written consent of GEV, and that the information shall be used by the recipient only as approved expressly by GEV. This document shall be returned to GEV upon its request. This document may be subject to certain restrictions under U.S. export control laws and regulations. © GE VERNOVA Company, GEV CONFIDENTIAL UNPUBLISHED WORK.	Drg No: **10P74310**	PLM No: A20065263 / Sht: 1 / Next Sht: -
Date:	Chkd:			GE VERNOVA

FINISH :- CLEAN

GE PROPRIETARY AND CONFIDENTIAL INFORMATION

This document is the property of General Electric Company ("GE") and contains proprietary information of GE. This document is loaned on the express condition that neither it nor the information contained therein shall be disclosed to others without the express written consent of GE, and that the information shall be used by the recipient only as approved expressly by GE. This document shall be returned to GE upon its request. This document may be subject to certain restrictions under U.S. export control laws and regulations.© General Electric Company, GE CONFIDENTIAL UNPUBLISHED WORK.

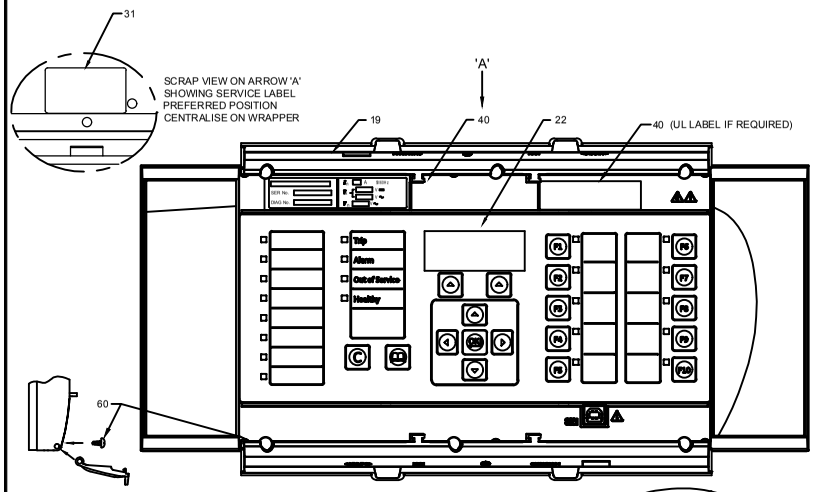

FRONT VIEW (WITH ACCESS COVERS OPEN)

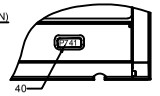

SCRAP VIEW
SHOWING ACCESS
COVER CLOSED

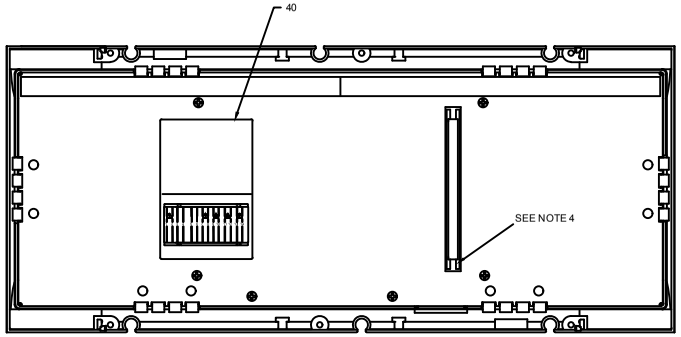

REAR VIEW OF USER INTERFACE

LABELS
NO LABEL OTHER THAN THOSE LISTED ON THIS SHEET SHOULD APPEAR ON THE RELAY.
IF ADDITIONAL LABELS ARE REQUIRED THE DESIGN OFFICE SHOULD BE NOTIFIED.
THIS NOTE DOES NOT APPLY TO INSPECTION, ASSEMBLY OR QUALITY CONTROL LABELS.

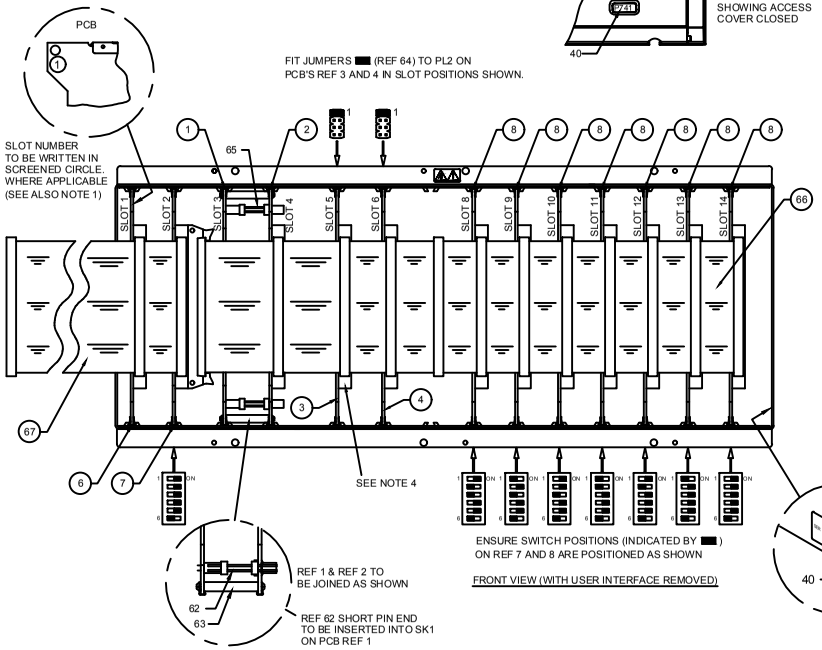

FRONT VIEW (WITH USER INTERFACE REMOVED)

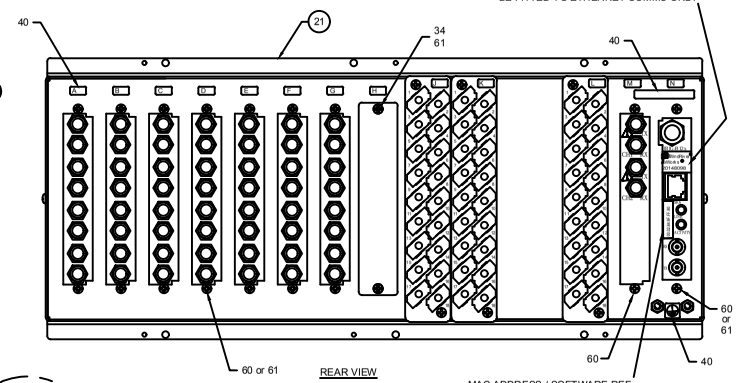

REAR VIEW

NOTES:

1. ON EACH PCB SERIAL NUMBER TO BE WRITTEN IN SCREENED BOX (WHERE APPLICABLE).
2. IF REF 6 OR 8 IS NOT REQUIRED FIT REF 34 WITH 2 OFF REF61.
3. COMMS BOARDS (REF8) ARE TO BE FITTED FROM RIGHT TO LEFT (SLOT14 TO SLOT 8) AS REQUIRED.
4. REMOVE LOCKING EARS FROM 64 WAY CONNECTOR (PROCESSOR PCB & SLOT 5 PCB ONLY)

* DENOTES VARIABLE QUANTITY / PART NUMBER

	QTY	REF	P741 NUMERICAL BUSBAR CENTRAL UNIT DESCRIPTION	MATERIAL
	1	1	ASSY POWER SUPPLY	ZN0021 *
	1	2	ASSY POWER SUPPLY	2070583 *
	1	3	ASSY OPTO INPUT	ZN0017 212
	1	4	ASSY RELAY OUTPUT	ZN0019 *
		5		
SEE NOTE 2	*	6	ASSY COMMS	*
	1	7	ASSY CO-PROCESSOR	ZN0084 003
SEE NOTES 2 & 3	*	8	ASSY COMMS (FOR PERIPHERAL UNITS)	ZN0084 001
		9		
		10		
		11		
		12		
		13		
		14		
		15		
		16		
		17		
		18		
		19		
		20		
	1	21	ASSY CASE	GN0110 013
	1	22	ASSY USER INTERFACE	GN0341 101
		23		
		24		
		25		
		26		
		27		
		27		
		29		
ONLY REQUIRED IF ETHERNET COMMS IS FITTED	*	30	Vx WORKS SOFTWARE	ZB9800 801
	1	31	WORLDWIDE CONTACT CENTRE LABEL	ZF8560 001B
		32		
		33		
	*	34	BLANKING PLATE	GN2037 001
		35		
		36		
		37		
		38		
		39		
	1	40	LABEL SHEET - 80TE (P741)	GN9011 040
		41		
		42		
		43		
		44		
		45		
		46		
		47		
		48		
		49		
		50		
		51		
		52		
		53		
		54		
		55		
		56		
		57		
		58		
		59		
	*	60	SELF-TAPPING PAN HEAD No4x1/4"	ZB4018 110
	*	61	SELF-TAPPING PAN HEAD No6x1/4"	ZB4018 215
	1	62	HEADER	ZB9031 985
	4	63	SPACER	ZB8011 213
	2	64	JUMPER	ZB9031 759
	1	65	HEADER	ZB9031 864
	1	66	ASSY RIBBON CABLE	GN0009 018
	1	67	ASSY RIBBON CABLE	GN0009 019
		68		
	1	69	BAGGED ITEMS - LABELS	GN9646 001
	3	70	BAGGED ITEMS - TERMINAL SCREWS	ZA0005 060
	2	71	BAGGED ITEMS - FIXING SCREWS	ZA0005 105
		72		
		73		

Issue: A.1	Revision: CID005962. INITIAL ISSUE.	Title: FINAL ASSEMBLY - P741 BUSBAR CENTRAL UNIT (80TE)	
Date: 5/9/2019	Name: S.WOOTTON	CAD DATA 1:1 DIMENSIONS: mm DO NOT SCALE	Drg No: GN0371
Date:	Chkd:		Sht: 101 / Next Sht: -

GE VERNOVA

FINISH :- CLEAN

GE PROPRIETARY AND CONFIDENTIAL INFORMATION

This document is the property of General Electric Company ("GE") and contains proprietary information of GE. This document is loaned on the express condition that neither it nor the information contained therein shall be disclosed to others without the express written consent of GE, and that the information shall be used by the recipient only as approved expressly by GE. This document shall be returned to GE upon its request. This document may be subject to certain restrictions under U.S. export control laws and regulations.© General Electric Company, GE CONFIDENTIAL UNPUBLISHED WORK.

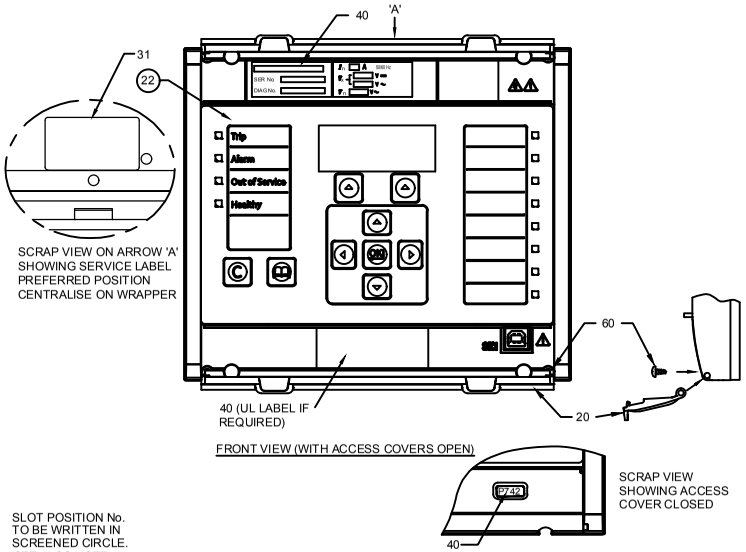

FRONT VIEW (WITH ACCESS COVERS OPEN)

SCRAP VIEW SHOWING ACCESS COVER CLOSED

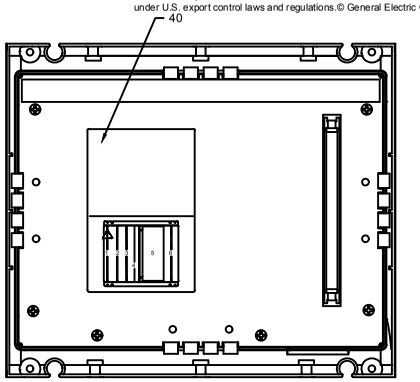

REAR VIEW OF USER INTERFACE

SLOT POSITION No. TO BE WRITTEN IN SCREENED CIRCLE. (SEE ALSO NOTE 1)

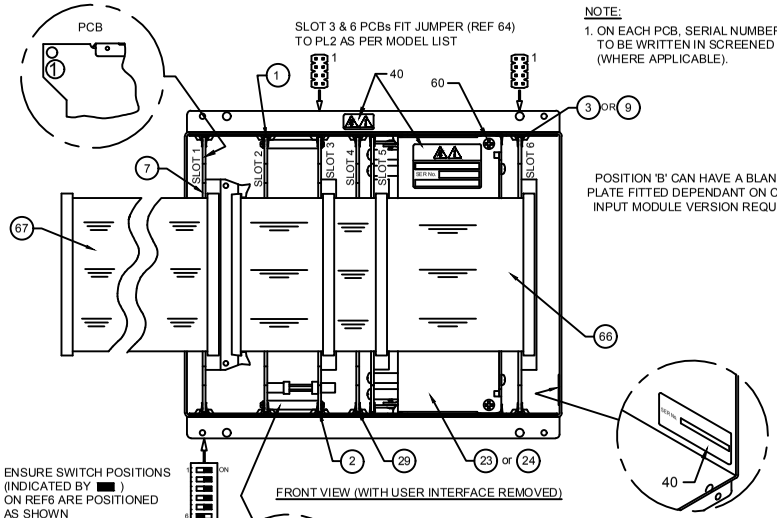

NOTE:
1. ON EACH PCB, SERIAL NUMBER TO BE WRITTEN IN SCREENED BOX. (WHERE APPLICABLE).

POSITION 'B' CAN HAVE A BLANKING PLATE FITTED DEPENDANT ON CASE & INPUT MODULE VERSION REQUIRED.

ENSURE SWITCH POSITIONS (INDICATED BY ■) ON REF6 ARE POSITIONED AS SHOWN

FRONT VIEW (WITH USER INTERFACE REMOVED)

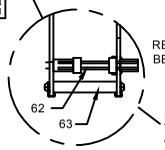

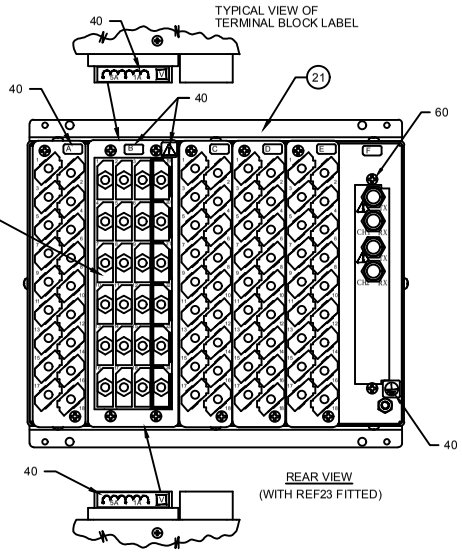

REAR VIEW (WITH REF23 FITTED)

LABELS
NO LABEL OTHER THAN THOSE LISTED ON THIS SHEET SHOULD APPEAR ON THE RELAY.
IF ADDITIONAL LABELS ARE REQUIRED THE DESIGN OFFICE SHOULD BE NOTIFIED.
THIS NOTE DOES NOT APPLY TO INSPECTION, ASSEMBLY OR QUALITY CONTROL LABELS.

* DENOTES VARIABLE QUANTITY / PART NUMBER

	PART	DESCRIPTION OF ASSEMBLY	
	***	P742 NUMERICAL BUSBAR - PERIPHERAL UNIT	
QTY	REF	DESCRIPTION	MATERIAL
1	1	ASSY POWER SUPPLY	ZN0021 *
1	2	ASSY RELAY OUTPUT	ZN0019 *01
*	3	ASSY UNIVERSAL INPUT BOARD	ZN0017 212
	4		
	5		
	6		
1	7	ASSY COPROCESSOR	ZN0084 003
	8		
*	9	ASSY HIGH BREAK RELAY OUTPUT	ZN0042 001
	10		
	11		
	12		
	13		
	14		
	15		
	16		
	17		
	18		
	19		
	20		
1	21	ASSY CASE	GN0024 *
1	22	ASSY USER INTERFACE	GN0178 101
*	23	ASSY STANDARD INPUT MODULE	GN0010 090
*	24	INPUT MODULE (UNIV. INPUTS ONLY)	GN0010 089
	25		
	26		
	27		
	28		
1	29	ASSEMBLY SCREEN PLATE	GN0058 001
	30		
1	31	WORLDWIDE SERVICE LABEL	ZF8560 001B
	32		
	33		
	34		
	35		
	36		
	37		
	38		
	39		
1	40	LABEL SHEET - 40TE	GN9011 041
	41		
	42		
	43		
	44		
	45		
	46		
	47		
	48		
	49		
	50		
	51		
	52		
	53		
	54		
	55		
	56		
	57		
	58		
	59		
8	60	SELF-TAPPING PAN HEAD No4x1/4''	ZB4018 110
	61		
1	62	HEADER	ZB9031 985
4	63	SPACER	ZB8011 213
2	64	JUMPER	ZB9031 759
	65		
1	66	ASSY RIBBON CABLE	GN0009 021
1	67	ASSY RIBBON CABLE	GN0009 023
	68		
1	69	BAGGED ITEMS - LABELS	GN90*
*	70	BAGGED ITEMS - TERMINAL SCREWS	ZA0005 060
1	71	BAGGED ITEMS - FIXING SCREWS	ZA0005 105
	72		
	73		

Issue: A.1	Revision: CID005962. INITIAL ISSUE.	Title: FINAL ASSEMBLY - 40TE P742 BUSBAR PERIPHERAL UNIT	
Date: 5/9/2019	Name: S.WOOTTON	CAD DATA 1:1 DIMENSIONS: mm DO NOT SCALE	Drg No: GN0372
Date:	Chkd:		Sht: 101 / Next Sht: -

GE VERNOVA

FINISH :- CLEAN

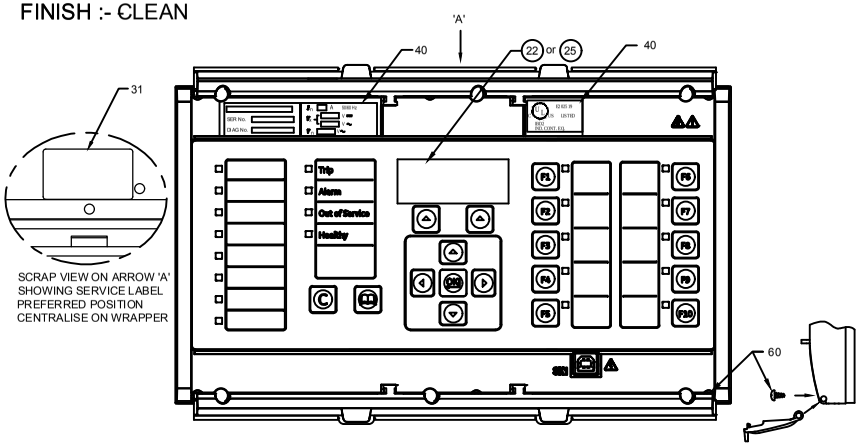

FRONT VIEW (WITH ACCESS COVERS OPEN)

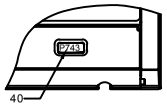

SCRAP VIEW SHOWING ACCESS COVER CLOSED

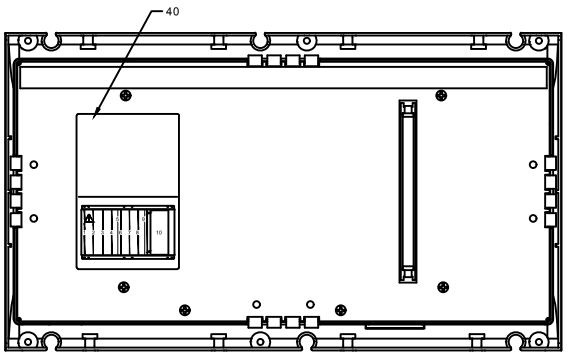

REAR VIEW OF USER INTERFACE

SEE NOTE 2

ONLY REQUIRED IF ETHERNET COMMS IS FITTED

SLOT POSITION No. TO BE WRITTEN IN SCREENED CIRCLE. (SEE ALSO NOTE 1)

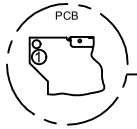

SLOT 8 PCB FIT JUMPER ■ (REF 64) TO PL2 AS SHOWN
SLOT 4, 6 & 7 PCBs FIT JUMPER (REF 64) TO PL2 AS PER MODEL LIST

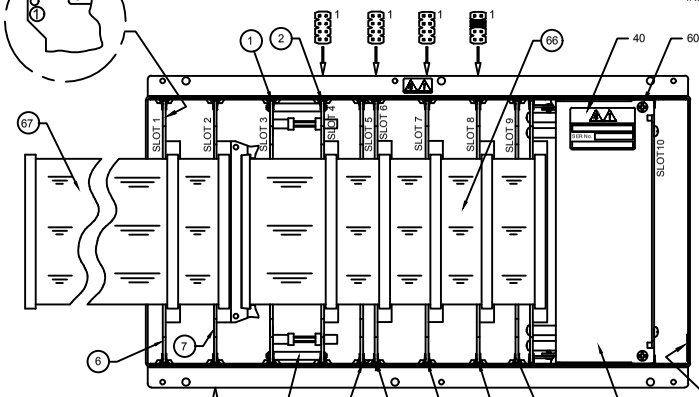

ENSURE SWITCH POSITIONS (INDICATED BY ■) ON REF6 ARE POSITIONED AS SHOWN

FRONT VIEW (WITH USER INTERFACE REMOVED)

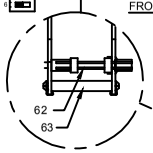

REF 1 & REF 2 TO BE JOINED AS SHOWN

REF 62 SHORT PIN END TO BE INSERTED INTO SK1 ON PCB REF 1

POSITION 'A' CAN HAVE A BLANKING PLATE FITTED DEPENDANT ON CASE & INPUT MODULE VERSION REQUIRED.

TYPICAL VIEW OF TERMINAL BLOCK LABEL

MAC ADDRESS / SOFTWARE REF. LABEL TO BE FITTED AT FINAL TEST TO ETHERNET COMMS ONLY

26. Vx WORKS SOFTWARE LICENCE LABEL TO BE FITTED TO ETHERNET COMMS ONLY

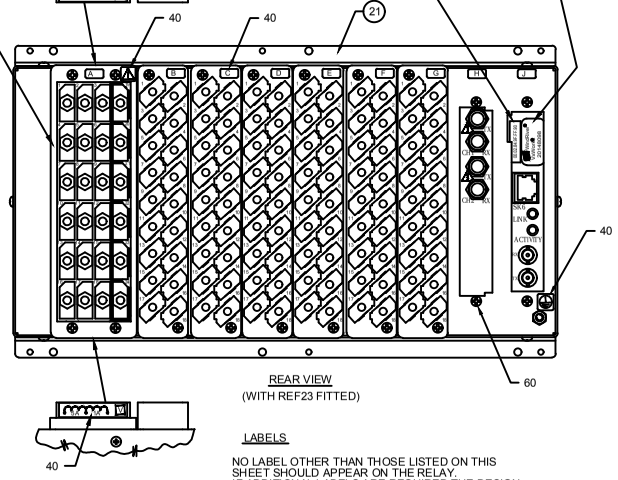

REAR VIEW
(WITH REF23 FITTED)

NOTES:

1. ON EACH PCB SERIAL NUMBER TO BE WRITTEN IN SCREENED BOX. (WHERE APPLICABLE).
2. IF REF 6 IS NOT REQUIRED FIT REF 34 WITH 2 OFF REF 61.
3. CAPACITOR SHIELD GN8016 001 IS TO BE FITTED ONLY WHEN POWER SUPPLY ZN0021 201, 202 OR 203 IS USED.

LABELS

NO LABEL OTHER THAN THOSE LISTED ON THIS SHEET SHOULD APPEAR ON THE RELAY. IF ADDITIONAL LABELS ARE REQUIRED THE DESIGN OFFICE SHOULD BE NOTIFIED. THIS NOTE DOES NOT APPLY TO INSPECTION, ASSEMBLY OR QUALITY CONTROL LABELS.

* DENOTES VARIABLE QUANTITY / PART NUMBEF

	PART	DESCRIPTION OF ASSEMBLY	
	***	P743 NUMBERICAL BUSBAR - PERIPHERAL UNIT	
QTY	REF	DESCRIPTION	MATERIAL
1	1	ASSY POWER SUPPLY	ZN0021 *
*	2	ASSY RELAY OUTPUT	ZN0019 *01
*	3	ASSY OPTO INPUT	ZN0017 212
	4		
	5		
*	6	ASSY COMMS	*
1	7	ASSY COPROCESSOR	ZN0084 003
	8		
*	9	ASSY HIGH BREAK RELAY OUTPUT	ZN0042 001
	10		
	11		
	12		
	13		
	14		
	15		
	16		
	17		
	18		
	19		
	20		
1	21	CASE ASSEMBLY	GN0025 *
*	22	ASSY USER INTERFACE - STANDARD	GN0179 101
*	23	ASSY STANDARD INPUT MODULE	GN0010 090
*	24	INPUT MODULE (UNIV. INPUTS ONLY)	GN0010 089
*	25	ASSY USER INTERFACE - EXTENDED	GN0277 101
*	26	Vx WORKS SOFTWARE	ZB9800 801
	27		
	28		
2	29	ASSEMBLY SCREEN PLATE	GN0058 001
	30		
1	31	WORLDWIDE SERVICE LABEL	ZF8560 001B
	32		
	33		
*	34	BLANKING PLATE	GN2037 001
	35		
	36		
	37		
	38		
	39		
1	40	LABEL SHEET - 60TE	GN9011 053
	41		
	42		
	43		
	44		
	45		
	46		
	47		
	48		
	49		
	50		
	51		
	52		
	53		
	54		
	55		
	56		
	57		
	58		
	59		
*	60	SELF-TAPPING PAN HEAD No4x1/4"	ZB4018 110
*	61	SELF-TAPPING PAN HEAD No6x1/4"	ZB4018 215
1	62	HEADER	ZB9031 985
4	63	SPACER	ZB8011 213
5	64	JUMPER	ZB9031 759
	65		
1	66	ASSY RIBBON CABLE	GN0009 027
1	67	ASSY RIBBON CABLE	GN0009 028
	68		
1	69	BAGGED ITEMS - LABELS	GN9091 001
7	70	BAGGED ITEMS - TERMINAL SCREWS	ZA0005 060
2	71	BAGGED ITEMS - FIXING SCREWS	ZA0005 105
	72		
	73		

Issue: A.2	Revision: CID006962. INITIAL ISSUE.REBRANDING OF P743.	Title: FINAL ASSEMBLY - 60TE BUSBAR P743 PERIPHERAL UNIT	
Date: 5/9/2019	Name: S.WOOTTON	Drg No: GN0373	Sht: 101
Date:	Chkd:		Next Sht: –

GE PROPRIETARY AND CONFIDENTIAL INFORMATION
This document is the property of General Electric Company ("GE") and contains proprietary information of GE. This document is loaned on the express condition that neither it nor the information contained therein shall be disclosed to others without the express written consent of GE, and that the information shall be used by the recipient only as approved expressly by GE. This document shall be returned to GE upon its request. This document may be subject to certain restrictions under U.S. export control laws and regulations.© General Electric Company, GE CONFIDENTIAL UNPUBLISHED WORK.

GE VERNOVA

GE VERNOVA

© 2025 GE Vernova. All rights reserved. Information contained in this document is indicative only. No representation or warranty is given or should be relied on that it is complete or correct or will apply to any particular project. This will depend on the technical and commercial circumstances. It is provided without liability and is subject to change without notice. Reproduction, use or disclosure to third parties, without express written authority, is strictly prohibited.