GE VERNOVA

Multilin Agile

P14D, P14N, P94V

Technical Manual
Feeder Management IED

Hardware Version: A
Firmware Version: 9.0
Publication Reference: MAP14-TM-EN-8

Copyright statement

Copyright © 2025 GE Vernova. All rights reserved.

GridBeats, Universal Relay, Multilin, MiCOM, S1 Agile, P40 Agile, DS Agile, EnerVista, CyberSentry, HardFiber, FlexLogic, FlexElement, FlexCurve, FlexAnalog, FlexInteger and FlexState are trademarks or registered trademarks of GE Vernova.

The contents of this manual are the property of GE Vernova. This documentation is furnished on license and may not be reproduced in whole or in part without the permission of GE Vernova. The content of this manual is for informational use only and is subject to change without notice.

Disclaimer

It is the responsibility of the user to verify and validate the suitability of all GE Vernova Grid Automation products. This equipment must be used within its design limits. The proper application including the configuration and setting of this product to suit the power system assets is the responsibility of the user, who is also required to ensure that all local or regional safety guidelines are adhered to. Incorrect application of this product could risk damage to property/the environment, personal injuries or fatalities and shall be the sole responsibility of the person/entity applying and qualifying the product for use.

The content of this document has been developed to provide guidance to properly install, configure and maintain this product for its intended applications. This guidance is not intended to cover every possible contingency that may arise during commissioning, operation, service, or maintenance activities. Should you encounter any circumstances not clearly addressed in this document, contact your local GE Vernova service site.

The information contained in this document is subject to change without notice.

IT IS THE SOLE RESPONSIBILITY OF THE USER TO SECURE THEIR NETWORK AND ASSOCIATED DEVICES AGAINST CYBER SECURITY INTRUSIONS OR ATTACKS. GE VERNOVA AND ITS AFFILIATES ARE NOT LIABLE FOR ANY DAMAGES AND/OR LOSSES ARISING FROM OR RELATED TO SUCH SECURITY INTRUSION OR ATTACKS.

Contents

Chapter 1 Introduction 1

1.1 Chapter Overview 2
1.2 Foreword 3
1.2.1 Target Audience 3
1.2.2 Typographical Conventions 3
1.2.3 Nomenclature 4
1.2.4 Compliance 4
1.3 Product Scope 5
1.3.1 Ordering Options 5
1.4 Features and Functions 6
1.4.1 Description of the Multilin Agile Feeder Protection System 6
1.4.2 Introduction to Logical Devices 7
1.4.3 Protection Functions 7
1.4.4 Control Functions 9
1.4.5 Measurement Functions 10
1.4.6 Communication Functions 11
1.4.7 System Functions 12
1.4.8 HMI Main Menu 13
1.5 Logic Diagrams 14
1.6 Functional Overview 15

Chapter 2 Safety Information 16

2.1 Chapter Overview 17
2.2 Health and Safety 18
2.3 Symbols 19
2.4 Installation, Commissioning and Servicing 20
2.4.1 Lifting Hazards 20
2.4.2 Electrical Hazards 20
2.4.3 Fusing Requirements 21
2.4.4 Equipment Connections 21
2.4.5 Protection Class 1 Equipment Requirements 22
2.4.6 Pre-energisation Checklist 22
2.4.7 Peripheral Circuitry 23
2.4.8 Upgrading/Servicing 24
2.5 Decommissioning and Disposal 25
2.6 Regulatory Compliance 26
2.6.1 EMC Compliance: 2014/30/EU 26
2.6.2 LVD Compliance: 2014/35/EU 26
2.6.3 RoHS Compliance 2011/65/EU and (EU) 2015/863 26

Chapter 3 Hardware Design 27

3.1 Chapter Overview 28
3.2 Hardware Architecture 29
3.3 Mechanical Implementation 30
3.3.1 Housing Variants 31
3.3.2 20TE Rear Panel 32
3.3.3 30TE Rear Panel 32
3.3.4 Terminal Connections 33
3.3.4.1 I/O Options (20TE) 33
3.3.4.2 I/O Options (30TE) 34
3.4 Front Panel 35

3.4.1 20TE Front Panel 35
3.4.2 30TE Front Panel 36
3.4.2.1 30TE IEC Front Panel 36
3.4.2.2 30TE ANSI Front Panel 37
3.4.3 Keypad 37
3.4.3.1 Clear/Reset Key Functionality 38
3.4.3.2 20TE Keypad 38
3.4.3.3 30TE Keypad (IEC, ANSI Variants) 40
3.4.3.4 Liquid Crystal Display 41
3.4.3.5 USB Port 42
3.4.3.6 Fixed Function LEDs 42
3.4.3.7 LED Programming 42
3.4.3.8 Programmable Function Keys/Pushbuttons 46
3.4.3.9 Local/Remote Key 46
3.4.3.10 Open/Close Breaker Control Keys 46

Chapter 4 Software Design 47

4.1 Chapter Overview 48
4.2 Software Design Overview 49
4.3 System Level Software 50
4.3.1 Real Time Operating System 50
4.3.2 System Services Software 50
4.3.3 Self-Diagnostic Software 50
4.3.4 Startup Self-Testing 50
4.3.4.1 System Boot 50
4.3.4.2 System Level Software Initialisation 50
4.3.4.3 Platform Software Initialisation and Monitoring 51
4.3.5 Continuous Self-Testing 51
4.4 Platform Software 52
4.4.1 Record Logging 52
4.4.2 Settings Database 52
4.4.3 Interfaces 52
4.5 Protection and Control Functions 53
4.5.1 Acquisition of Samples 53
4.5.2 Frequency Tracking 53
4.5.3 Fourier Signal Processing 53
4.5.4 Flexlogic Equation Editor 54
4.5.5 Event Recording 54
4.5.6 Disturbance Recorder 55
4.5.7 Fault Locator 55

Chapter 5 Configuration 56

5.1 Chapter Overview 57
5.2 Settings Application Software 58
5.2.1 Setting Entry Methods 58
5.2.2 Common Settings 58
5.2.3 Settings Text Abbreviations 59
5.3 Device 61
5.3.1 Date and Time Configuration 61
5.3.1.1 Clock 62
5.3.1.2 PTP Protocol 62
5.3.1.3 IRIG-B 62
5.3.1.4 SNTP Protocol 63
5.3.2 Security 63
5.3.3 Communications 63

5.3.4 Disturbance Recorder 63
5.3.5 Data Logger 63
5.3.6 Fault Records 64
5.3.7 Event Data 64
5.3.8 Flex States 64
5.3.9 Front Panel 65
5.3.9.1 Display Properties 65
5.3.9.2 Default Screens 65
5.3.10 Resetting 65
5.3.11 Installation 65
5.3.12 Clear Records 66
5.3.13 Using the HMI Panel 66
5.3.13.1 Navigating the HMI Panel 67
5.3.13.2 Getting Started 68
5.3.13.3 Default Display 68
5.3.13.4 Default Display Navigation 69
5.3.13.5 Password Entry and Role Based Access Control (RBAC) 69
5.3.13.6 Password Entry and Role Based Access Control (RBAC) 69
5.3.13.7 Processing Alarms and Records 70
5.3.13.8 Menu Structure 70
5.3.13.9 Changing the Settings 71
5.4 System 72
5.4.1 CT Ratio 72
5.4.2 VT Ratio 72
5.4.3 Power Sensing 73
5.4.4 Power System 74
5.4.5 CB Setup 74
5.4.6 User Curves 74

Chapter 6 Current Protection Functions 75

6.1 Chapter Overview 76
6.2 Overcurrent Protection Principles 77
6.2.1 IDMT Characteristics 77
6.2.1.1 IEC 60255 IDMT Curves 78
6.2.1.2 European Standards 80
6.2.1.3 North American Standards 82
6.2.1.4 IAC Curves 83
6.2.1.5 I2T Curves 84
6.2.1.6 I4T Curves 84
6.2.1.7 Differences Between the North American and European Standards 85
6.2.1.8 Programmable Curves 85
6.2.2 Principles of Implementation 85
6.2.2.1 Timer Hold Facility 86
6.2.3 Function Setting Application 86
6.3 Phase Overcurrent Protection 88
6.3.1 Phase Overcurrent Protection Implementation 88
6.3.2 Non-Directional Overcurrent Logic 89
6.3.3 Directional Element 90
6.3.4 Directional Overcurrent Logic 92
6.3.5 Application Notes 93
6.3.5.1 Parallel Feeders 93
6.3.5.2 Ring Main Arrangements 94
6.3.5.3 Setting Guidelines 94
6.3.5.4 Setting Guidelines (Directional Element) 95
6.4 Voltage Dependent Overcurrent Element 96
6.4.1 Voltage Dependent Overcurrent Protection Implementation 96
6.4.1.1 Voltage Controlled Overcurrent Protection 96

6.4.1.2 Voltage Restrained Overcurrent Protection 97
6.4.1.3 Voltage Dependent Overcurrent Logic 98
6.4.2 Application Notes 99
6.4.2.1 Setting Guidelines 99
6.5 Negative Sequence Overcurrent Protection 100
6.5.1 Negative Sequence Overcurrent Protection Implementation 100
6.5.2 Non-Directional Negative Sequence Overcurrent Logic 101
6.5.3 Directional Element 102
6.5.3.1 Directional Negative Sequence Overcurrent 103
6.5.3.2 Directional Negative Sequence Overcurrent Logic 103
6.5.4 Application Notes 104
6.5.4.1 Setting Guidelines (Current Threshold) 104
6.5.4.2 Setting Guidelines (Time Delay) 104
6.5.4.3 Setting Guidelines (Directional element) 104
6.6 Sensitive Earth Fault Protection 106
6.6.1 SEF Protection Implementation 106
6.6.2 Non-directional SEF Logic 107
6.6.3 Directional Element 108
6.6.3.1 Directional SEF Logic 108
6.6.4 Application Notes 111
6.6.4.1 Insulated Systems 111
6.6.4.2 Setting Guidelines (Insulated Systems) 112
6.7 Cold Load Pickup 114
6.7.1 Implementation 114
6.7.2 CLP Logic 115
6.7.3 Application Notes 115
6.7.3.1 CLP for Resistive Loads 115
6.7.3.2 CLP for Motor Feeders 115
6.7.3.3 CLP for Switch On To Fault Conditions 116
6.8 Thermal Overload Protection 117
6.8.1 Single Time Constant Characteristic 117
6.8.2 Dual Time Constant Characteristic 117
6.8.3 Thermal Overload Protection Implementation 118
6.8.4 Thermal Overload Protection Logic 118
6.8.5 Application Notes 119
6.8.5.1 Setting Guidelines for Dual Time Constant Characteristic 119
6.8.5.2 Setting Guidelines for Single Time Constant Characteristic 120
6.9 Broken Conductor Protection 122
6.9.1 Broken Conductor Protection Implementation 122
6.9.2 Broken Conductor Protection Logic 122
6.9.3 Application Notes 123
6.9.3.1 Setting Guidelines 123
6.10 Blocked Overcurrent Protection 124
6.10.1 Blocked Overcurrent Implementation 124
6.10.2 Application Notes 124
6.10.2.1 Busbar Blocking Scheme 124
6.11 SOTF Protection 126
6.11.1 SOTF Implementation 126
6.11.2 SOTF Logic 126
6.12 Undercurrent Protection 127
6.12.1 Undercurrent Implementation 127
6.12.2 Undercurrent Logic 127
6.13 Load Blinder 128
6.13.1 Load Blinder Implementation 128
6.13.2 Load Blinder Logic 129
6.13.2.1 Load Blinder Setting Guidelines 130

Chapter 7 Restricted Earth Fault Protection 131

7.1 Chapter Overview 132
7.2 REF Protection Principles 133
7.2.1 Resistance-Earthed Star Windings 134
7.2.2 Solidly-Earthed Star Windings 134
7.2.3 Through Fault Stability 135
7.2.4 Restricted Earth Fault Types 135
7.2.4.1 Low Impedance REF Principle 136
7.2.4.2 High Impedance REF Principle 137
7.3 Restricted Earth Fault Protection Implementation 139
7.3.1 Restricted Earth Fault Protection Settings 139
7.3.2 Low Impedance REF 139
7.3.2.1 Setting the Bias Characteristic 139
7.3.3 High Impedance REF 140
7.3.3.1 High Impedance REF Calculation Principles 141
7.4 Application Notes 142
7.4.1 Star Winding Resistance Earthed 142
7.4.2 Low Impedance REF Protection Application 143
7.4.2.1 Setting Guidelines for Biased Operation 143
7.4.2.2 Low Impedance REF Scaling Factor 143
7.4.2.3 Parameter Calculations 144
7.4.3 High Impedance REF Protection Application 145
7.4.3.1 High Impedance REF Operating Modes 145
7.4.3.2 Setting Guidelines for High Impedance Operation 146

Chapter 8 CB Fail Protection 149

8.1 Chapter Overview 150
8.2 Circuit Breaker Fail Protection 151
8.3 Circuit Breaker Fail Implementation 152
8.3.1 Circuit Breaker Failure Initiation 152
8.3.2 Circuit Breaker Failure Determination 152
8.3.3 Circuit Breaker Failure Outputs 153
8.4 Circuit Breaker Fail Logic 154
8.5 Circuit Breaker Mapping 155
8.6 Application Notes 156
8.6.1 Reset Mechanisms for CB Fail Timers 156
8.6.2 Setting Guidelines (CB fail Timer) 156

Chapter 9 Current Transformer Requirements 158

9.1 Chapter Overview 159
9.2 CT requirements 160
9.2.1 Phase Overcurrent Protection 161
9.2.1.1 Directional Elements 161
9.2.1.2 Non-directional Elements 161
9.2.2 Earth Fault Protection 161
9.2.2.1 Directional Elements 161
9.2.2.2 Non-directional Elements 161
9.2.3 SEF Protection (Residually Connected) 162
9.2.3.1 Directional Elements 162
9.2.3.2 Non-directional Elements 162
9.2.4 SEF Protection (Core-Balanced CT) 162
9.2.4.1 Directional Elements 162
9.2.4.2 Non-directional Elements 162
9.2.5 Low Impedance REF Protection 163

9.2.6 High Impedance REF Protection 163
9.2.7 High Impedance Busbar Protection 163
9.2.8 Use of Metrosil Non-linear Resistors 164
9.2.9 Use of ANSI C-class CTs 166

Chapter 10 Voltage Protection Functions 167

10.1 Chapter Overview 168
10.2 Undervoltage Protection 169
10.2.1 Undervoltage Protection Implementation 169
10.2.2 Undervoltage Protection Logic 170
10.2.3 Application Notes 171
10.2.3.1 Undervoltage Setting Guidelines 171
10.3 Overvoltage Protection 172
10.3.1 Overvoltage Protection Implementation 172
10.3.2 Overvoltage Protection Logic 173
10.3.3 Application Notes 174
10.3.3.1 Overvoltage Setting Guidelines 174
10.4 Residual Overvoltage Protection 175
10.4.1 Residual Overvoltage Protection Implementation 175
10.4.2 Residual Overvoltage Logic 176
10.4.3 Application Notes 176
10.4.3.1 Calculation for Solidly Earthed Systems 176
10.4.3.2 Calculation for Impedance Earthed Systems 177
10.4.3.3 Setting Guidelines 178
10.5 Negative Sequence Overvoltage Protection 179
10.5.1 Negative Sequence Overvoltage Implementation 179
10.5.2 Negative Sequence Overvoltage Logic 179
10.5.3 Application Notes 179
10.5.3.1 Setting Guidelines 179
10.6 Positive Sequence Undervoltage Protection 181
10.6.1 Positive Sequence Undervoltage Implementation 181
10.6.2 Positive Sequence Undervoltage Logic 181
10.7 Positive Sequence Overvoltage Protection 182
10.7.1 Positive Sequence Overvoltage Implementation 182
10.7.2 Positive Sequence Overvoltage Logic 182
10.8 Volts Per Hertz 183
10.8.1 Volts Per Hertz Implementation 183
10.8.2 Volts Per Hertz Logic 185
10.9 UV Reactive Power 186
10.9.1 UV Reactive Power Implementation 186
10.9.2 UV Reactive Power Logic 187
10.10 Timed Undervoltage Protection (27T) 191
10.10.1 Timed Undervoltage Implementation 191
10.10.2 Timed Undervoltage Logic 192
10.10.3 Setting Guidelines 193
10.11 Moving Average Overvoltage Protection 194
10.11.1 Moving Average Overvoltage Protection Implementation 194
10.11.2 Moving Average Overvoltage Protection Logic 195

Chapter 11 Frequency Protection Functions 196

11.1 Chapter Overview 197
11.2 Frequency Protection Overview 198
11.2.1 Frequency Protection Implementation 198
11.2.2 Frequency Protection Common Setup 198
11.3 Underfrequency Protection 199

11.3.1 Underfrequency Protection Implementation 199
11.3.2 Underfrequency Protection Logic 200
11.3.3 Application Notes 201
11.3.3.1 Setting Guidelines 201
11.3.3.2 Fast Underfrequency 201
11.3.3.3 Overfrequency Protection 203
11.3.3.4 Independent R.O.C.O.F Protection 206

Chapter 12 Power Protection Functions 209

12.1 Chapter Overview 210
12.2 Overpower Protection 211
12.2.1 Overpower Protection Implementation 211
12.2.2 Overpower Logic 211
12.2.3 Application Notes 212
12.2.3.1 Forward Overpower Setting Guidelines 212
12.2.3.2 Reverse Power Considerations 212
12.2.3.3 Reverse Overpower Setting Guidelines 212
12.3 Underpower Protection 214
12.3.1 Underpower Protection Implementation 214
12.3.2 Underpower Logic 214
12.3.3 Application Notes 215
12.3.3.1 Low Forward Power Considerations 215
12.3.3.2 Low Forward Power Setting Guidelines 215
12.4 Wattmetric Ground Fault 216
12.4.1 Wattmetric Ground Implementation 216
12.4.2 Wattmetric Ground Logic 217
12.4.3 Setting Guidelines 217

Chapter 13 Admittance 220

13.1 Chapter Overview 221
13.2 Introduction 222
13.3 Neutral Admittance 223
13.3.1 Neutral Admittance Implementation 223
13.3.2 Neutral Admittance Logic 224
13.3.3 Setting Guidelines 224

Chapter 14 Autoreclose 228

14.1 Chapter Overview 229
14.2 Introduction to 3-phase Autoreclose 230
14.3 Implementation 231
14.4 Autoreclose Function Inputs 232
14.4.1 CB Healthy 232
14.4.2 Block AR 232
14.4.3 Reset Lockout 232
14.4.4 AR Auto Mode 232
14.4.5 AR LiveLine Mode 232
14.4.6 Telecontrol Mode 232
14.4.7 Live/Dead Ccts OK (Live/Dead Circuits OK) 232
14.4.8 AR Sys Checks (AR System Checks) 232
14.4.9 Ext AR Prot Trip (External AR Protection Trip) 233
14.4.10 Ext AR Prot Start (External AR Protection Start) 233
14.4.11 DAR Complete (Delayed Autoreclose Complete) 233
14.4.12 CB in Service (Circuit Breaker in Service) 233
14.4.13 AR Restart 233

14.4.14 DT OK To Start (Dead Time OK to Start) 233
14.4.15 DeadTime Enabled 233
14.4.16 AR Init TripTest (Initiate Trip Test) 234
14.4.17 AR Skip Shot 1 234
14.4.18 Inh Reclaim Time (Inhibit Reclaim Time) 234
14.5 Autoreclose Function Outputs 235
14.5.1 AR In Progress 235
14.5.2 DAR In Progress 235
14.5.3 Sequence Counter Status signals 235
14.5.4 Successful Close 235
14.5.5 AR In Service 235
14.5.6 AR Blk Main Prot (Block Main Protection) 235
14.5.7 AR Blk SEF Prot (Block SEF Protection) 235
14.5.8 Reclose Checks 235
14.5.9 DeadTime In Prog 236
14.5.10 DT Complete (Dead Time Complete) 236
14.5.11 AR Sync Check (AR Synchronisation Check) 236
14.5.12 AR SysChecks OK (AR System Checks OK) 236
14.5.13 Auto Close 236
14.5.14 Protection Lockt (Protection Lockout) 236
14.5.15 Reset Lckout Alm (Reset Lockout Alarm) 236
14.5.16 Reclaim In Prog 236
14.5.17 Reclaim Complete 236
14.6 Autoreclose Function Alarms 237
14.6.1 AR No Sys Check 237
14.6.2 AR CB Unhealthy 237
14.6.3 AR Lockout 237
14.7 Autoreclose Operation 238
14.7.1 Operating Modes 238
14.7.1.1 Four-Position Selector Switch Implementation 238
14.7.1.2 Operating Mode Selection Logic 240
14.7.1.3 Autoreclose Initiation 240
14.7.1.4 Blocking Instantaneous Protection for Selected Trips 243
14.7.1.5 Blocking Instantaneous Protection for Lockouts 245
14.7.1.6 Dead Time Control 246
14.7.1.7 AR System Checks 248
14.7.1.8 Reclaim Timer Initiation 249
14.7.1.9 Autoreclose Inhibit 250
14.7.1.10 Autoreclose Lockout 251
14.7.1.11 Sequence Co-ordination 253
14.7.1.12 System Checks for First Reclose 254
14.8 Setting Guidelines 255
14.8.1 Number of Shots 255
14.8.2 Dead Timer Setting 255
14.8.2.1 Stability and Synchronism Requirements 255
14.8.2.2 Operational Convenience 255
14.8.2.3 Load Requirements 256
14.8.2.4 Circuit Breaker 256
14.8.2.5 Fault De-ionisation Time 256
14.8.2.6 Protection Reset Time 256
14.8.3 Reclaim Timer Setting 257

Chapter 15 Monitoring and Control 258

15.1 Chapter Overview 259
15.2 Event Records 260
15.2.1 Event Types 260

15.2.1.1 Opto-input Events 261
15.2.1.2 IED Output Events 261
15.2.1.3 Alarm and Self-Test Error Events 261
15.2.1.4 Fault Record Events 261
15.2.1.5 Security Events 261
15.2.1.6 Protection Events 261
15.3 Disturbance Recorder 262
15.4 Data Logger 264
15.5 Fault Records 266
15.5.1 Fault Locator Settings Example 266
15.6 Event Data 268
15.7 Flex States 269
15.8 Flex Elements 270
15.9 Measurements 272
15.9.1 Measured Quantities 272
15.9.1.1 Measured and Calculated Currents 272
15.9.1.2 Measured and Calculated Voltages 272
15.9.1.3 Power and Energy Quantities 272
15.9.1.4 Demand Values 272
15.9.1.5 Frequency Measurements 273
15.9.1.6 Other Measurements 273
15.9.2 Opto-input Time Stamping 273
15.10 Power Factor 274
15.10.1 Power Factor Implementation 274
15.10.2 Power Factor Logic 275
15.10.3 Power Factor Logic Setting Guidelines 276
15.11 Breaker Arcing Current 279
15.11.1 Breaker Arcing Current Implementation 279
15.11.2 Breaker Arcing Current Logic 280
15.11.3 Breaker Arcing Current Application Notes 280
15.12 Voltage Disturbance 282
15.12.1 Voltage Sag (dip) 282
15.12.2 Voltage Swell 282
15.12.3 Voltage Disturbance Implementation 282
15.12.4 Voltage Disturbance Logic 284
15.12.5 Voltage Disturbance Implementation Setting Guidelines 285
15.13 Voltage Interruptions 286
15.13.1 Voltage Interruptions Implementation 286
15.13.2 Voltage Interruptions Logic 286
15.13.3 Voltage Interruption Implementation Setting Guidelines 287
15.14 CB Health Monitoring 288
15.14.1 CB Health Monitoring Logic 289
15.14.2 Application Notes 290
15.14.2.1 Setting the Thresholds for the Arc Energy 290
15.14.2.2 Setting the thresholds for the Number of Operations 291
15.14.2.3 Setting the thresholds for the Operating Time 291
15.14.2.4 Setting the Thresholds for Excesssive Fault Frequency 291
15.15 CB State Monitoring 292
15.15.1 CB State Monitoring Logic 293
15.16 Setpoint Group 294
15.17 Select Before Operate 295
15.17.1 Select Before Operate Implementation 295
15.17.2 Select Before Operate Logic 295
15.17.2.1 Switching Device Selection using Navigation Keys 295
15.17.2.2 Switching Device Control using Front Panel 295
15.18 Circuit Breaker Control 300
15.18.1 CB Control Using the IED Menu 300

15.18.2 CB Control using the Hotkeys in 20TE Front Panel 301
15.18.3 CB Control Using the Open and Close Pushbuttons in 30TE Front Panel 301
15.18.4 CB Control using the Opto-inputs 302
15.18.5 Remote CB Control 302
15.18.6 Synchronisation Check 303
15.18.7 CB Healthy Check 303
15.18.8 CB Control Logic 304
15.18.9 CB Control Settings Description 308
15.18.10 Control Authority (IEC61850) 311
15.19 Switches Status and Control 315
15.19.1 Switch Status Logic 317
15.19.2 Switch Control Logic 318
15.20 Pole Dead Function 319
15.20.1 Pole Dead Logic 319
15.21 Synchrocheck 321
15.21.1 Synchrocheck Implementation 321
15.21.1.1 VT Connections 322
15.21.1.2 Voltage Monitoring 322
15.21.1.3 Check Synchronisation 322
15.21.1.4 Synchro Check Logic 324
15.21.1.5 System Check Flexlogic Equation Editor 325
15.22 Harmonic Detection 326
15.23 Pole Discrepancy 328
15.24 Demand 334
15.24.1 Current Demand 334
15.24.2 Active Power Demand 334
15.24.3 Reactive Power Demand 335
15.25 Digital Counters 336
15.26 Loss Of Communications 337
15.27 Transient Earth Fault Detection 338
15.27.1 Transient Earth Fault Detection Implementation 339
15.27.2 Transient Earth Fault Detection Logic 343
15.27.3 Application Notes 346
15.27.3.1 Transient Earth Fault Detection: Active Power Check 346
15.28 High Impedance Fault (HiZ) Detection 348
15.28.1 High Impedance Fault (HiZ/HiF) Protection Implementation 348
15.28.2 High Impedance (HiZ/HiF) Rules and Settings Description 349
15.28.3 High Impedance Fault (HiZ/HiF)Protection Logic 352
15.29 Trip Bus 354
15.29.1 Trip Bus Implementation 354
15.29.2 Trip Bus Logic 355
15.30 Digital Elements 356
15.30.1 Digital Elements Implementation 356
15.30.2 Digital Elements Logic 357
15.30.3 Application Example 357
15.31 Arc Flash 359

Chapter 16 Supervision 361

16.1 Chapter Overview 362
16.2 DC Supply Monitor 363
16.2.1 DC Supply Monitor Implementation 363
16.2.2 DC Supply Monitor Logic 364
16.3 Voltage Transformer Supervision 365
16.3.1 Loss of One or Two Phase Voltages 365
16.3.2 Loss of all Three Phase Voltages 365
16.3.3 VTS Implementation 365

16.3.4 VTS Logic 367
16.4 Current Transformer Supervision 368
16.4.1 CTS Implementation 368
16.4.2 CTS Logic 369
16.4.3 Application Notes 369
16.4.3.1 Setting Guidelines 369
16.5 Trip Circuit Supervision 370
16.5.1 Trip Circuit Supervision Scheme 1 370
16.5.1.1 Resistor Values 370
16.5.1.2 Flexlogic Equation Editor for TCS Scheme 1 371
16.5.2 Trip Circuit Supervision Scheme 2 371
16.5.2.1 Resistor Values 371
16.5.2.2 Flexlogic Equation Editor for TCS Scheme 2 372
16.5.3 Trip Circuit Supervision Scheme 3 372
16.5.3.1 Resistor Values 372
16.5.3.2 Flexlogic Equation Editor for TCS Scheme 3 373
16.5.4 Trip Circuit Supervision Scheme 4 373
16.5.4.1 Resistor Values 373
16.5.4.2 Flexlogic Equation Editor for TCS Scheme 4 374

Chapter 17 Digital I/O and Flexlogic Equation Editor 375

17.1 Chapter Overview 376
17.2 Configuring Digital Inputs and Outputs 377
17.3 Flexlogic Equation Editor 378
17.4 Configuring the Opto-Inputs 380
17.5 Fixed Function LEDs 381
17.6 Programmable LEDs 382
17.7 Default LEDs 384
17.8 Virtual Inputs 387
17.9 GOOSE Subscribe (Remote Inputs, RI DPS, GOOSE Analog) and Remote Output 389
17.10 IED Outputs 390
17.10.1 Assigning IED Outputs 390
17.11 Virtual Outputs 391

Chapter 18 Communications 392

18.1 Chapter Overview 393
18.2 Communication Interfaces 394
18.3 Serial Communication 396
18.3.1 EIA(RS)485 Biasing Requirements 396
18.3.2 EIA(RS)485 Bus 396
18.4 Standard Ethernet Communication 398
18.4.1 USB 398
18.5 Redundant Ethernet Communication 399
18.5.1 Supported Protocols and Functionality 399
18.5.2 Parallel Redundancy Protocol (PRP) 400
18.5.3 High-Availability Seamless Redundancy (HSR) 401
18.5.3.1 HSR Multicast Topology 401
18.5.3.2 HSR Unicast Topology 402
18.5.4 RSTP Configuration 402
18.5.4.1 RSTP Configuration 403
18.5.5 Link Loss Alert Functionality (LLA) 403
18.6 Data Protocols 404
18.6.1 IEC 60870-5-103 404
18.6.1.1 Physical Connection and Link Layer 405
18.6.1.2 Initialisation 405

18.6.1.3 Time Synchronisation 405
18.6.1.4 IEC103 Interoperability 406
18.6.1.5 IEC 60870-5-103 Application Level 412
18.6.2 DNP and IEC104 point lists 414
18.6.3 IEC60870-5-104 417
18.6.4 DNP 3.0 419
18.6.4.1 Physical Connection and Link Layer 419
18.6.4.2 Object 1 Binary Inputs 420
18.6.4.3 Object 10 Binary Outputs 421
18.6.4.4 Object 20 Binary Counters 421
18.6.4.5 Object 30 Analogueue Input 422
18.6.4.6 DNP 3.0 Device Profile 422
18.6.5 Modbus 429
18.6.5.1 Physical Connection and Link Layer 429
18.6.5.2 Response Codes 430
18.6.5.3 Supported Function Codes 430
18.6.5.4 Administrator Login and Commands via Modbus 430
18.6.6 IEC 61850 433
18.6.6.1 Benefits of IEC 61850 433
18.6.6.2 IEC 61850 Interoperability 433
18.6.6.3 The IEC 61850 Data Model 433
18.6.6.4 IEC 61850 in IEDs 434
18.6.6.5 IEC 61850 Data Model Implementation 435
18.6.6.6 IEC 61850 Communication Services Implementation 435
18.6.6.7 IEC 61850 Peer-to-peer (GOOSE) communications 435
18.6.6.8 Mapping GOOSE Messages to Remote Inputs 435
18.6.6.9 Ethernet Disconnection 435
18.6.6.10 Loss of Power 436
18.6.6.11 IEC 61850 Configuration 436
18.7 Time Synchronisation 437
18.7.1 IEEE 1588 Precision Time Protocol (PTP Version 2) 437
18.7.1.1 Feature Summary 437
18.7.1.2 System Operation 438
18.7.2 IRIG-B 438
18.7.2.1 Demodulated IRIG-B Implementation 439
18.7.2.2 SNTP 439
18.7.3 Time Synchronisation using the Communication Protocols 440

Chapter 19 Cybersecurity 441

19.1 Overview 442
19.2 The Need for Cybersecurity 443
19.3 Standards 444
19.3.1 NERC Compliance 444
19.3.1.1 CIP 002 445
19.3.1.2 CIP 003 445
19.3.1.3 CIP 004 445
19.3.1.4 CIP 005 445
19.3.1.5 CIP 006 446
19.3.1.6 CIP 007 446
19.3.1.7 CIP 008 446
19.3.1.8 CIP 009 446
19.3.2 IEEE 1686-2013 446
19.3.3 IEC 62351 447
19.4 Cybersecurity Implementation 452
19.4.1 RBAC Functionality 452
19.4.2 Basic Security Implementation 453
19.4.2.1 Device/Local Authentication 453

19.4.2.2 Four-level Access 453
19.4.2.3 Bypass Access 454
19.4.2.4 Enhanced Password Security 455
19.4.2.5 Disabling Physical and Logical Ports 455
19.4.2.6 Non-Encrypted/Clear Text Modbus 456
19.4.2.7 Security Events 456
19.4.3 Advanced Cybersecurity Implementation 457
19.4.3.1 Permissions Vs Access Matrix/Permission Assignment 457
19.4.3.2 Server/Remote Authentication 458
19.4.3.3 Server/Remote Authentication (RADIUS) 458
19.4.3.4 Server/Remote Authentication (LEGACY LDAP PULL MODEL) 459
19.4.4 Unique Configurable Usernames 462
19.4.5 Secure Encrypted Communication 462
19.4.5.1 ModBus/SSH 462
19.4.5.2 SFTP 462
19.4.6 Syslog 463
19.4.7 Increased Product Hardening 464
19.4.7.1 Additional Features 464
19.4.8 Lost Password 465
19.4.9 Loading Factory Configuration 465
19.4.10 Additional Features 465
19.4.10.1 Lost Password 465
19.4.10.2 Loading Factory Configuration 465
19.5 RBAC User Management Cybersecurity Configuration Tool 466
19.5.1 Cybersecurity Modbus Settings Configuration 466
19.5.1.1 Cybersecurity Non-Modbus Settings Configuration 466
19.5.1.2 User Management Configuration 467
19.5.1.3 Roles Configuration 469
19.5.1.4 Security Settings Configuration 472
19.5.1.5 Syslog Configuration 475

Chapter 20 Installation 477

20.1 Chapter Overview 478
20.2 Product Identification 479
20.3 Handling the Goods 480
20.3.1 Receipt of the Goods 480
20.3.2 Unpacking the Goods 480
20.3.3 Storing the Goods 480
20.3.4 Dismantling the Goods 480
20.4 Mounting the Device 481
20.4.1 Flush Panel Mounting 481
20.4.1.1 Rack Mounting 481
20.4.1.2 Draw-out Unit Withdrawal and Insertion 482
20.4.2 Software Only 488
20.5 Cables and Connectors 489
20.5.1 Lug Orientation 489
20.5.2 Terminal Blocks 489
20.5.3 Power Supply Connections 491
20.5.4 Earth Connnection 491
20.5.5 Phase Sequence and Transformer Polarity 492
20.5.6 Current Transformers 492
20.5.7 Voltage Transformer Connections 492
20.5.8 Watchdog (Critical Fail) Connections 493
20.5.9 EIA(RS)485 Connections 493
20.5.10 IRIG-B Connection 493
20.5.11 Opto-input Connections 494

20.5.12 Output IED Connections 495
20.5.13 Ethernet Copper Connections 495
20.5.14 Ethernet Fibre Connections 495
20.5.15 USB Connection 495
20.6 Case Dimensions and Panel Cutout 496

Chapter 21 Commissioning Instructions 498

21.1 Chapter Overview 499
21.2 General Guidelines 500
21.3 Commissioning Test Menu 501
21.3.1 Simulation 501
21.3.1.1 Pre-Fault 502
21.3.1.2 Fault 502
21.3.1.3 Post-Fault 502
21.3.2 Test LEDs 503
21.3.3 Opto-Inputs 503
21.3.4 IED Outputs 503
21.3.5 Autoreclose 503
21.3.6 GOOSE 504
21.4 Commissioning Equipment 505
21.4.1 Recommended Commissioning Equipment 505
21.4.2 Essential Commissioning Equipment 505
21.4.3 Advisory Test Equipment 506
21.5 Product Checks 507
21.5.1 Product Checks with the IED De-energised 507
21.5.1.1 Visual Inspection 508
21.5.1.2 Insulation 508
21.5.1.3 External Wiring 508
21.5.1.4 Watchdog (Critical Fail) Contact 508
21.5.1.5 Power Supply 508
21.5.2 Pxxx_CI_ProductChecksEnergised 509
21.5.2.1 Watchdog (Critical Fail) Contact 509
21.5.2.2 Date and Time 509
21.5.2.3 Test LEDs 509
21.5.2.4 Test Opto-inputs 509
21.5.2.5 Test IED Outputs 510
21.5.2.6 Test Serial Communication Port COM1 510
21.5.2.7 Test Serial Communication Port COM2 511
21.5.2.8 Test Ethernet Communication 511
21.5.2.9 Test Current Inputs 511
21.5.2.10 Test Voltage Inputs 511
21.6 Setting Checks 513
21.6.1 Apply Application-specific Settings 513
21.6.1.1 Transferring Settings from a Settings File 513
21.6.1.2 Entering settings using the HMI 513
21.7 Protection Timing Checks 515
21.7.1 Overcurrent Check 515
21.7.2 Connecting the Test Circuit 515
21.7.3 Performing the Test 515
21.7.4 Check the Operating Time 515
21.8 Onload Checks 516
21.8.1 Confirm Current Connections 516
21.8.2 Confirm Voltage Connections 516
21.8.3 On-load Directional Test 517
21.9 Final Checks 518

Chapter 22 Maintenance and Troubleshooting 519

22.1 Chapter Overview 520
22.2 Maintenance 521
22.2.1 Maintenance Checks 521
22.2.1.1 Targets and Alarms 521
22.2.1.2 Opto-Inputs 521
22.2.1.3 IED Output Contacts 521
22.2.1.4 Measurement Accuracy 522
22.2.1.5 External Damage 522
22.2.1.6 Records 522
22.2.1.7 General maintenance 522
22.2.2 Replacing the Unit 523
22.2.3 Cleaning 523
22.3 Troubleshooting 524
22.3.1 Self-Diagnostic Software 524
22.3.2 Power-up Errors 524
22.3.3 Self-test Errors 524
22.3.4 Error Code during Operation 528
22.3.5 Mal-operation during testing 528
22.3.5.1 Failure of IED Output Contacts 528
22.3.5.2 Failure of Opto-inputs 529
22.3.5.3 Incorrect Analogue Signals 530
22.3.6 Flexlogic Equation Editor Troubleshooting 530
22.3.7 USB Port Troubleshooting 530
22.3.8 Repair and Modification Procedure 530

Chapter 23 Technical Specifications 532

23.1 Chapter Overview 533
23.2 Interfaces 534
23.2.1 Front USB Port 534
23.2.2 Rear Serial Port 1 (COM1) 534
23.2.3 Rear Serial Port 2 (COM2) 534
23.2.4 IRIG-B Port (shared with rear serial port COM1) 534
23.2.5 Rear Ethernet Ports Copper (ETH1, ETH2, ETH3) 535
23.2.6 Rear Ethernet Ports Fibre (ETH1, ETH2, ETH3) 535
23.3 Performance of Current Protection Functions 536
23.3.1 Three-phase Overcurrent Protection (Directional/Non-directional) 536
23.3.1.1 Three-phase Overcurrent Directional Parameters 536
23.3.2 Earth Fault Protection (Directional/Non-directional) 536
23.3.2.1 Earth Fault Directional Parameters 537
23.3.3 Sensitive Earth Fault Protection (Non-directional) 537
23.3.3.1 SEF Directional Parameters 537
23.3.4 Restricted Earth Fault Protection 538
23.3.5 Negative Sequence Overcurrent Protection (Directional/Non-directional) 538
23.3.5.1 Directional Parameters 538
23.3.6 Broken Conductor Protection 538
23.3.7 Thermal Overload Protection 539
23.3.8 Undercurrent 539
23.3.9 Switch On To Fault 539
23.3.10 Load Blinder 539
23.3.11 Circuit Breaker Control 540
23.4 Performance of Voltage Protection Functions 541
23.4.1 Undervoltage Protection 541
23.4.2 Time Undervoltage Protection 541
23.4.3 UV VAr Power Protection 541

23.4.4	Overvoltage Protection	541
23.4.5	Residual Overvoltage Protection	542
23.4.6	Positive Sequence Voltage Protection	542
23.4.7	Negative Sequence Voltage Protection	542
23.4.8	Volts Per Hertz	543
23.4.9	Moving Average Overvoltage Protection	543
23.5	**Admittance Protection**	**544**
23.5.1	Neutral Admittance	544
23.6	**Power Protection Functions**	**545**
23.6.1	Overpower/Underpower Protection	545
23.6.2	Wattmetric Ground Fault	545
23.7	**Performance of Frequency Protection Functions**	**546**
23.7.1	Overfrequency Protection	546
23.7.2	Underfrequency Protection	546
23.7.3	Fast Underfrequency	547
23.7.4	Frequency Rate of Change Protection	547
23.8	**Performance of Monitoring and Control Functions**	**548**
23.8.1	Current Transformer Supervision	548
23.8.2	Voltage Transformer Supervision	548
23.8.3	Pole Dead	548
23.8.4	CB State and Condition Monitoring	548
23.8.5	Flexlogic Equation Editor Timers	548
23.8.6	DC Supply Monitor	549
23.8.7	Pole Discrepancy	549
23.8.8	Check Sync	549
23.8.9	Power Factor	549
23.8.10	Breaker Arcing Current	550
23.8.11	CB Health	550
23.8.12	Underfrequency Restoration	550
23.8.13	Harmonic Detection	550
23.8.14	Power Quality	550
23.8.14.1	Voltage Disturbance	550
23.8.14.2	Voltage Interruption	551
23.8.15	Cold Load Pickup Protection	551
23.8.16	Autoreclose	551
23.8.17	Circuit Breaker Fail	551
23.8.18	Flex Logic Timers	551
23.8.19	Flex Logic Timers	552
23.8.20	Trip Bus (Trip Without FlexLogic)	552
23.8.21	Digital Elements	553
23.9	**Measurements and Recording**	**554**
23.9.1	Metering	554
23.9.2	Disturbance Records	554
23.9.3	Event and Fault Records	554
23.9.4	Fault Locator (Fault Records)	554
23.10	**Regulatory Compliance**	**555**
23.10.1	EMC Compliance: 2014/30/EU	555
23.10.2	EMC Compliance: 2574-14 of ramadan 1436	555
23.10.3	LVD Compliance: 2014/35/EU	555
23.10.4	LVD Compliance: 2573-14 of ramadan 1436	555
23.10.5	RoHS Compliance 2011/65/EU and (EU) 2015/863	555
23.10.6	Mechanical Specifications	555
23.10.6.1	Physical Parameters	555
23.10.6.2	Enclosure Protection	556
23.10.6.3	Mechanical Robustness	556
23.10.6.4	Transit Packaging Performance	556

23.11 Ratings 557
23.11.1 AC Measuring Inputs 557
23.11.2 Current Transformer Inputs 557
23.11.3 Voltage Transformer Inputs 557
23.12 Power Supply 558
23.12.1 Auxiliary Power Supply Voltage 558
23.12.2 Nominal Burden 558
23.12.3 Auxiliary Power Supply Interruption 558
23.13 Input/Output Connections 559
23.13.1 Opto-Isolated Digital Inputs 559
23.13.1.1 Nominal Pickup and Reset Thresholds 559
23.13.1.2 Opto-Isolated Trip Circuit Supervision Inputs (TCS)* 559
23.13.2 RL1, RL2, and RL3 Output Contacts* 560
23.13.3 Auxiliary Output Contacts 560
23.13.4 Watchdog Contact 561
23.14 Environmental Conditions 562
23.14.1 Ambient Temperature Range 562
23.14.2 Temperature Endurance Test 562
23.14.3 Ambient Humidity Range 562
23.15 Type Tests 563
23.15.1 Insulation 563
23.15.2 Creepage Distances and Clearances 563
23.15.3 Impulse Voltage Withstand Test 563
23.16 Electromagnetic Compatibility 564
23.16.1 1 MHz Burst High Frequency Disturbance Test 564
23.16.2 Damped Oscillatory Test 564
23.16.3 Immunity to Electrostatic Discharge 564
23.16.4 Electrical Fast Transient or Burst Requirements 564
23.16.5 Surge Withstand Capability 564
23.16.6 Surge Immunity Test 564
23.16.7 Immunity to Radiated Electromagnetic Energy 565
23.16.8 Radiated Immunity from Digital Communications 565
23.16.9 Immunity to Conducted Disturbances Induced by Radio Frequency Fields 565
23.16.10 Magnetic Field Immunity 565
23.16.11 Conducted Emissions 566
23.16.12 Radiated Emissions 566
23.16.13 Power Frequency 566
23.17 Arc Flash 567
23.17.1 HS Phase/Ground Instantaneous Overcurrent 50P/50G 567
23.17.2 Arc Flash Sensor/Fiber 567

Appendix A Ordering Options 570

Appendix B Settings and Signals 575

Appendix C Wiring Diagrams 577

Appendix D I/O Population - Type of Boards (usage and configuration) 584

Appendix E Compatibility Mode Tables 586

CHAPTER 1

INTRODUCTION

1.1 CHAPTER OVERVIEW

This chapter provides some general information about the technical manual and an introduction to the device(s) described in this technical manual.

This chapter contains the following sections:

Chapter Overview 2

Foreword 3

Product Scope 5

Features and Functions 6

Logic Diagrams 14

Functional Overview 15

1.2 FOREWORD

This technical manual provides a functional and technical description of GE Vernova's Multilin Agile IED, as well as a comprehensive set of instructions for using the device.

> *Note:*
> *P40 Agile Enhanced is now rebranded to Multilin Agile. Both 20TE and 30TE products are similar, with any differences between them highlighted by reference to the case size.*

The level at which this manual is written assumes that you are already familiar with protection engineering and have experience in this discipline. The description of principles and theory is limited to that which is necessary to understand the products. For further details on general protection engineering theory, we refer you to <Company's> publication, PAAG (Protection & Automation Application Guide), which is available online or from our contact centre.

We have attempted to make this manual as accurate, comprehensive and user-friendly as possible. However, we cannot guarantee that it is free from errors. Nor can we state that it cannot be improved. We would therefore be very pleased to hear from you if you discover any errors or have any suggestions for improvement. Our policy is to provide the information necessary to help you safely specify, engineer, install, commission, maintain, and eventually dispose of this products. We consider that this manual provides the necessary information, but if you consider that more details are needed, please contact us.

All feedback should be sent to our contact centre via:

contact.centre@ge.com

1.2.1 TARGET AUDIENCE

This manual is aimed towards all professionals charged with installing, commissioning, maintaining, troubleshooting, or operating any of the products within the specified product range. This includes installation and commissioning personnel as well as engineers who will be responsible for operating the product.

The level at which this manual is written assumes that installation and commissioning engineers have knowledge of handling electronic equipment and follow all safety precautions. Also, system and protection engineers have a thorough knowledge of protection systems and associated equipment.

1.2.2 TYPOGRAPHICAL CONVENTIONS

The following typographical conventions are used throughout this manual.

- The names for special keys appear in capital letters.
  For example: ENTER
- When describing software applications, menu items, buttons, labels etc as they appear on the screen are written in bold type.
  For example: Select **Save** from the file menu.
- Filenames and paths use the courier font
  For example: `Example\File.text`
- Special terminology is written with leading capitals
  For example: Sensitive Earth Fault
- If reference is made to the IEDs internal settings and signals database, the menu group heading text is written in upper case italics
  For example: The *SYSTEM DATA*
- IED menu paths are shown with \ separators
  For Example: SETPOINTS\CONTROL\AUTORECLOSE
- If reference is made to the IEDs internal settings and signals database, the value is written as follows:
  The ***Language*** setting in the *SYSTEM DATA* heading contains the value `English`

1.2.3 NOMENCLATURE

Due to the technical nature of this manual, many special terms, abbreviations and acronyms are used throughout the manual. Some of these terms are well-known industry-specific terms while others may be special product-specific terms used by GE Vernova. The first instance of any acronym or term used in a particular chapter is explained. In addition, a separate glossary is available on the GE Vernova website, or from the GE Vernova contact centre.

We would like to highlight the following changes of nomenclature however:

- The word 'relay' is no longer used to describe the device itself. Instead, the device is referred to as the 'IED' (Intelligent Electronic Device), the 'device', or the 'product'. The word 'relay' is used purely to describe the electromechanical components within the device, i.e. the output relays.
- British English is used throughout this manual.
- The British term 'Earth' is used in favour of the American term 'Ground'.

1.2.4 COMPLIANCE

The device has undergone a range of extensive testing and certification processes to ensure and prove compatibility with all target markets. A detailed description of these criteria can be found in the Technical Specifications chapter.

1.3 PRODUCT SCOPE

Multilin Agile IEDs are microprocessor-based devices for primary and backup over-current protection of medium and low voltage distribution feeders. Multilin Agile IEDs provide integral directional and non-directional overcurrent, overvoltage and earth-fault protection and is suitable for application on solidly earthed, impedance earthed, Petersen coil earthed, and isolated systems.

In addition to the protection features, each device provides protection, control, and monitoring functions with both local and remote human interfaces. They also display the present trip/alarm conditions, and the available measured system parameters. Recording of past trip, alarm or control events, maximum demand levels, and energy consumption is also performed.

The P14D is a Directional IED with three functional variants:

- The P14DB is the base device for Directional Feeder applications
- The P14DL is an advanced Directional IED with Autoreclose, Fault Locator, Check Sync, df/dt and power protection functions
- The P14DZ is the advanced directional IED (P14DL) with added TGFD transient ground fault (for the Standard Earth CT option only), and HiF/HiZ High Impedance fault detection (for the Sensitive Earth CT option only)

The P14N is a Non-Directional IED with two functional variants:

- The P14NB is the base device for Non-Directional Feeder applications
- The P14NL is advanced Non-Directional IED with Autoreclose functions
- The P14NZ is the advanced Non-Directional IED (P14NL) with added HiF/HiZ High Impedance fault detection (for the Sensitive Earth CT option only)

The P94V is a Voltage and Frequency IED with two functional variants:

- The P94VB is the base device for Voltage and Frequency applications
- The P94VP is advanced Voltage and frequency IED with Check sync and Autoreclose functions

All models are available with a range of Input/Output options, which are described in the hardware design chapter and summarised in the ordering options.

The small footprint and the withdrawable option make the Multilin Agile ideal for panel mounting on either new or retrofit installations.

Setting programming can be accomplished with the front panel keys and display. Due to the numerous settings, this manual method can be somewhat laborious. Settings can also be entered with a PC running the EnerVista Configuration software. Even with minimal computer knowledge, this menu-driven software provides easy access to all front panel functions and to the IEC 61850 configuration tool. IEC 61850 standard is Cortec dependent (if available for the IED it should be configured using EnerVista Configuration software). Actual values and settings can be displayed, altered, stored, and printed. If settings are stored in a CID file, they can be downloaded at any time via the front panel port of the device using a USB cable connected to the USB port of a personal computer.

1.3.1 ORDERING OPTIONS

All current models and variants for this product are defined in an interactive spreadsheet called the Cortec. This is available on the company website.

Alternatively, you can obtain it via the Contact Centre at:

GA.support@gevernova.com

A copy of the Cortec is also supplied as a static table in the Appendices of this document. However, it should only be used for guidance as it provides a snapshot of the interactive data taken at the time of publication.

1.4 FEATURES AND FUNCTIONS

1.4.1 DESCRIPTION OF THE MULTILIN AGILE FEEDER PROTECTION SYSTEM

CPU

IED functions are controlled by a Texas Instruments AM5706 Sitara Processor, which measures all analogue signals and digital inputs, controls all output IEDs; and all the Ethernet communication protocols.

Analogue Input and Waveform Capture

Magnetic transformers are used to scale-down the incoming analogue signals from the source instrument transformers. The analogue signals are then passed through a low pass anti-aliasing filter. All signals are then simultaneously captured by sample and hold buffers to ensure there are no phase shifts. The signals are converted to digital values by a 16KHz 24-bit A/D converter before finally being passed on to the CPU for analysis. Both current and voltage are sampled sixty-four times per power frequency cycle. These ‘raw’ samples are scaled in software, then placed into the waveform capture buffer, thus emulating a fault recorder. The sampling rate for the Disturbance Recorder can be selected via setting from (128\64\32\16\8) samples per cycle. The waveforms can be retrieved from the IED via the EnerVista Configuration software for display and diagnostics or using the SCADA system.

Frequency

Frequency measurement is accomplished by measuring the time between zero crossings of the composite signal of three-phase bus voltages. The signals are passed through a low pass filter to prevent false zero crossings. Frequency tracking utilizes the measured frequency to set the sampling rate for voltage which results in better accuracy for the Discrete Fourier Transform (DFT) algorithm for off nominal frequencies.

The main frequency tracking source uses three-phase bus voltages. If a stable frequency signal is not available, then the tracking frequency defaults to the nominal system frequency.

Phasors, Transients, and Harmonics

All waveforms are processed eight times every cycle.

Processing of AC Current Inputs

The DC Decaying Removal Filter is a short window digital filter, which removes the DC decaying component from the asymmetrical current present at the moment a fault occurs. This is done for all current signals used for overcurrent protection; voltage signals use the same DC Decaying Removal Filter. This filter ensures no overreach of the overcurrent protection.

The Discrete Fourier Transform (DFT) uses exactly one cycle of samples to calculate a phasor quantity which represents the signal at the fundamental frequency; all harmonic components are removed. All subsequent calculations (e.g. power, etc.) are based upon the current and voltage phasors, such that the resulting values have no harmonic components. RMS (root mean square) values are calculated from one cycle of samples prior to filtering.

Protection Elements

Most of the voltage, current and frequency protection elements are processed eight times every cycle to determine if a pickup has occurred or a timer has expired. The voltage and current protection elements use RMS current/ voltage, or the magnitude of the phasor.

1.4.2 INTRODUCTION TO LOGICAL DEVICES

Logical Device definitions

The Multilin Agile IED implements an IEC 61850 server that can contain one or more Logical Devices. Each Logical Device contains a data model built from instances of specific Logical Nodes and must consist of at least an instance of the LPHD Logical Node (which is responsible for providing physical device information) and an instance of the LLN0 Logical Node (for addressing common issues across the Logical Device).

The IEC 61850 data model is contained within the Logical Devices detailed in the table below. All Multilin Agile devices will name the supported Logical Devices consistently to ensure that data model variables with the same purpose will have the same name within each Multilin Agile IED server.

Logical Device	Comment/Usage
Ctrl	Multilin Agile Controls Domain
Meter	Multilin Agile Measurements Domain
Prot	Multilin Agile Protection Domain
Master	Multilin Agile System Domain

IEC 61850 Logical Device data model

The IEC 61850 Logical Device top-level data model consists of instances of Logical Nodes. The data model name for a Logical Node instance is constructed from an optional prefix (known as the wrapper), the Logical Node name, and an instance ID (or suffix).

The data model in Multilin Agile is in an alphabetically sorted order, rather than a logical order, because this is the natural order of the data when presented by a native MMS browser. (Higher level browsers can of course impart any ordering that they desire).

1.4.3 PROTECTION FUNCTIONS

The Multilin Agile IEDs offer the following protection functions. The IEC 61850 Logical Device data model for the Multilin Agile Protection Domain (Prot) is listed in the following table along with the protection functions description.

IEC 61850 Protection Domain (LD: Prot)	Product			ANSI	Protection Description	Stages
LN Instance	P14N	P14D	P94V			
auxPTOVX	No	Yes	Yes	59X	Residual OV (M) Measured (Auxiliary Overvoltage*)	4
BrknCondGAPC1	Yes	Yes	No	46BC	Broken Conductor	1
gndPIOCX	Yes	Yes	No	50G	Ground (EF1 Measured) Instantaneous Overcurrent	4
gndPTOCX	Yes	Yes	No	51G	Ground (EF1 Measured) Time Overcurrent	2
gndRDIRX	No	Yes	No	67G	Ground (EF1 Measured) Directional Overcurrent	4
hsePIOCX	Yes	Yes	No	50SG (50SEF)	Sensitive Ground (SEF Measured) Instantaneous Overcurrent	4
hsePTOCX	Yes	Yes	No	51SG	Sensitive Ground (SEF Measured) Time Overcurrent	2
hseRDIRX	No	Yes	No	67SG	Sensitive Ground (SEF Measured) Directional Overcurrent	4
LLN0	Yes	Yes	Yes		Protection Logical Device	NA

IEC 61850 Protection Domain (LD: Prot)	Product			ANSI	Protection Description	Stages
LN Instance	P14N	P14D	P94V			
LPHD	Yes	Yes	Yes		Physical Device Information	NA
ndPIOCX	Yes	Yes	No	50N	Neutral (EF2 Derived) Instantaneous Overcurrent	4
ndPTOCX	Yes	Yes	No	51N	Neutral (EF2 Derived) Time Overcurrent	2
ndPTOVX	No	Yes	Yes	59N	Residual OV (D) Derived (Neutral OV*)	4
ndRDIRX	No	Yes	No	67N	Neutral (EF2 Derived) Directional Overcurrent	4
ngseqPIOCX	Yes	Yes	No	50_2 (46)	Negative Sequence Instantaneous Overcurrent	4
ngseqPTOCX	Yes	Yes	No	51_2	Negative Sequence Time Overcurrent	4
ngseqPTOVX	No	Yes	Yes	59_2 (47)	Negative Sequence Overvoltage	2
ngseqRDIRX	No	Yes	No	67_2	Negative Sequence Directional Overcurrent	4
PDOPX	No	Yes (P14DL)	No	32OF	Underpower	2
PDUPX	No	Yes (P14DL)	No	32LF	Overpower	2
PFRCX	No	Yes (P14DL)	Yes (P94VP)	81R (81 df/dt)	Rate of Change of Frequency (ROCOF)	9
phsPIOCX	Yes	Yes	No	50P (50)	Phase Instantaneous Overcurrent	6
phsPTOCX	Yes	Yes	No	51P(51)/ 51PV (51V)	Phase Time Overcurrent/ Phase Time Overcurrent with Voltage Restraint	3
phsPTOVX	No	Yes	Yes	59P (59)	Phase Overvoltage	4
phsPTUVX	No	Yes	Yes	27P (27)	Phase Undervoltage	4
phRDIRX	No	Yes	No	67P (67)	Phase Directional Overcurrent	6
PoleDeaGAPC1	Yes	Yes	No		Pole Dead	1
posseqPTOVX	No	Yes	Yes	59_1 (59V)	Positive Sequence Overvoltage	2
posseqPTUVX	No	Yes	Yes	27_1 (27V)	Positive Sequence Undervoltage	2
PTOFX	No	Yes	Yes	81O	Over Frequency	9
PTUC1	Yes	Yes	No	37	Undercurrent	1
PTUFX	No	Yes	Yes	81U	Under Frequency	9
RGFPDIF1	Yes	Yes	No	64N	Restricted Earth Fault	1
SwOntoFltGAPC1	Yes	Yes	No	50 SOTF	Switch on to Fault	1
ThmOvlPTTR1	Yes	Yes	No	49	Thermal Overload	1
LodEncPDISX	No	Yes	No		Load Encroachment	2
MvmAvPTOVX	No	Yes	Yes		Moving Average Overvoltage	2
NeutAdmPSDEX	No	Yes (P14DL)	No	21YN	Neutral Admittance	4

IEC 61850 Protection Domain (LD: Prot)	Product			ANSI	Protection Description	Stages
LN Instance	P14N	P14D	P94V			
PHIZ1	Yes (P14NZ2)	Yes (P14DZ2)	No	HiZ (HiF)	High Impedance Fault Detection	1
PTEFX	No	Yes (P14DZ)	No		Transient Ground Fault	2
PVPHX	No	Yes (P14DL)	Yes (P94VP)	24	Volts Per Hertz	6
RctPwrPTUVX	No	Yes (P14DL)	No	27Q	Reactive Power Undervoltage	6
TmPTUVX	No	Yes	Yes	27T	Undervoltage	4
WatPSDEX	No	Yes (P14DL)	No	32N	Wattmetric Ground Fault	4

Note:
'X' represents the instance number of the function.

Note:
**indicates IEC 61850 naming description*

1.4.4 CONTROL FUNCTIONS

The Multilin Agile IEDs offer the following control functions:

Feature
Power-up diagnostics and continuous self-monitoring
Alternative setting groups (6)
Programmable LEDs and Pushbuttons/Function keys (Cortec dependent)
Watchdog contact (Critical Fail)
Basic and advanced cyber-security (Cortec dependent)
Programmable allocation of digital inputs and outputs
Control inputs
Flexlogic Equation Editor
Circuit breaker control, status & condition monitoring
Trip circuit and coil supervision
CT supervision (only for products with CT inputs)
VT supervision (only for products with CT & VT inputs)
Fault locator (only for products with CT & VT inputs)

The IEC 61850 Logical Device data model for the Multilin Agile Controls Domain (Ctrl) is listed in the following table along with the control functions description.

IEC 61850 Controls Domain (LD: Ctrl)	Product			ANSI	Control Description	Stages
LN Name	P14N	P14D	P94V			
ColdLodGAPC1	Yes	Yes	No	CLP	Cold Load Pickup	1
CSWX	Yes	Yes	Yes	1	Switch Controller	8
CTSupGAPC1	Yes	Yes	No	CTS	CT Supervision	1
HaDetPHARX	Yes	Yes	No		Harmonic Detection	4
LLN0	Yes	Yes	Yes		Controls Logical Device	N/A
LPHD	Yes	Yes	Yes		Physical Device Information	N/A
PoleDscGAPC1	Yes	Yes	No	52	Pole Discrepancy (Pole Discordance*)	1
RBRF1	Yes	Yes	No	50BF	Breaker Failure (CB Fail & I<)	1
RREC1	Yes (P14NL)	Yes (P14DL)	Yes (P94VP)	79	Autoreclose (3 Phases)	1
SynChkRSYN1	No	Yes (P14DL)	Yes (P94VP)	25	Check Sync (Synchrocheck*)	1
TVTR1	No	Yes	No	VTS (60)	VT Supervision	1
XCBR1	Yes	Yes	Yes	52	CB Control (Circuit Breaker)	1
XSWIX	Yes	Yes	Yes	33	SW Control (Circuit Switch)	8
trbusPTRCX	Yes	Yes	Yes		Trip Bus (aggregation of signal for Trip, Alarm or signalization purposes)	6
SCBR1	Yes	Yes	Yes		CB Supervision	1
SWICILOX	Yes	Yes	Yes		SWX Interlocking	8

Note:
'X' represents the instance number of the function.

Note:
**indicates IEC 61850 naming description*

1.4.5 MEASUREMENT FUNCTIONS

The device offers the following measurement functions:

Measurement Function	Details
Measurements (Exact range of measurements depend on the device model)	Measured currents and calculated sequence and RMS currents Measured voltages and calculated sequence and RMS voltages Power and energy quantities Peak, fixed and rolling demand values Frequency measurements Others measurements
Disturbance records (waveform capture, oscillography) Channels/duration each or total/samples per cycle	128\64\32\16\8 samples/cycle
Fault Reports	25
Event Records/Event logging	2048

Measurement Function	Details
Time Stamping of Opto-inputs	Yes

The IEC 61850 Logical Device data model for the Multilin Agile Measurements Domain (Meter) is listed in the following table.

IEC 61850 Measurements Domain (LD: Meter)	Product			ANSI	Meter Description	Stages
LN Instance	P14N	P14D	P94V			
HThdMHAI1	Yes	Yes	No		Harmonic Currents Metering (Harmonics and Interharmonics)	N/A
LLN0	Yes	Yes	Yes		Meter Logical Device	N/A
LPHD	Yes	Yes	Yes		Physical Device Information (name plate, health)	N/A
MMTR1	No	Yes	No		Energy Metering (+Whr, -Whr, +VARhr, -VARhr)	N/A
MMXU1	Yes	No	No		CT Bank-B Metering	N/A
MMXU1	No	Yes	No		VT Bank-A, CT Bank-B, Frequency and Power Metering	N/A
MMXU1	No	No	Yes		VT Bank-A and Frequency Metering for P94V	N/A
MSQI1	No	Yes	No		Sequence Currents and Voltages (Sequence Metering*)	N/A
MSQI1	Yes	No	No		Sequence Currents (Sequence Metering*)	N/A
MSQI1	No	No	Yes		Sequence Voltages (Sequence Metering*)	N/A

Note:
'X' represents the instance number of the function.

Note:
**indicates IEC 61850 naming description*

1.4.6 COMMUNICATION FUNCTIONS

The device offers the following communication functions:

Communication Function	Details
Local HMI	Yes
Multi-language HMI (English (UK), English (US), French, Russian	Yes
Front port	USB (Maintenance)
Rear serial port 1 (COM1)	RS485 or IRIG-B
Rear serial port 2 (COM2)	RS485*
Rear Ethernet port 1 (ETH1)	Single Channel Ethernet (Copper or Fibre*) for Engineering/ SCADA Communication
Rear Ethernet ports 2 and 3 (ETH2 & ETH3)*	Dual channel Ethernet (Copper or Fibre) supporting redundant/LLA/independent mode of SCADA communication Ethernet Protocols available*: Modbus TCP, DNP3oE, IEC61850 Ed.2*, IEC62439-3 (PRP/HSR)
Serial protocols available	Modbus RTU, DNP3 Serial, IEC 60870-5-103

Communication Function	Details
Ethernet protocols available	Modbus TCP, DNP3oE, IEC 61850 Ed.2*
Time synchronisation	IRIG-B, SNTP*, PTP*, communication protocols synchronisation*
Virtual inputs	128
Cyber-security	Yes*
EnerVista Configuration software	Yes

Note:
(*) Cortec dependent.

1.4.7 SYSTEM FUNCTIONS

Multilin Agile IEDs offer the following generic system functions. The IEC 61850 Logical Device data model for the Multilin Agile System Domain (Master) is listed in the following table along with the generic system functions description.

IEC 61850 System Domain (LD: Master)	Product		ANSI	Master Description	Stages
LN Instance	P24N	P24D			
GGIO1	Yes	Yes		GGIO1 Indication (1 to 32 Status)	32
GGIO2	Yes	Yes		Opto Inputs status (the number of opto inputs depends of the Cortec I/O option selected)	Cortec related
GGIO3	Yes	Yes		Virtual Inputs (1-256)	256
GGIO4	Yes	Yes		Virtual Outputs (1-256)	256
GGIO5	Yes	Yes		Remote Inputs (1-128)	128
GGIO6	Yes	Yes		Output Relays status (the number of relay outputs depends of the Cortec I/O option selected)	Cortec related
LEDsIHMI1	Yes	Yes		Led status of the front panel	N/A
LCCH1	Yes	Yes		Physical communication channel supervision	N/A
LGOSX	Yes	Yes		GOOSE Subscription (1 to 32)	32
LLN0	Yes	Yes		Master Logical Device	N/A
LPHD	Yes	Yes		Physical Device Information	N/A
LTIM1	Yes	Yes		Time Management	
TmClkLTMS1	Yes	Yes		Time Master Supervision	N/A
TransRcdRDRE1	Yes	Yes		Transients Records status	N/A
TmClkLTMS1	Yes	Yes	Yes	Time Master Supervision	
TransRcdRDRE1	Yes	Yes	Yes	Transient Records Status	

Note:
X' represents the instance number of the function.

Note:
**indicates IEC 61850 naming description*

1.4.8 HMI MAIN MENU

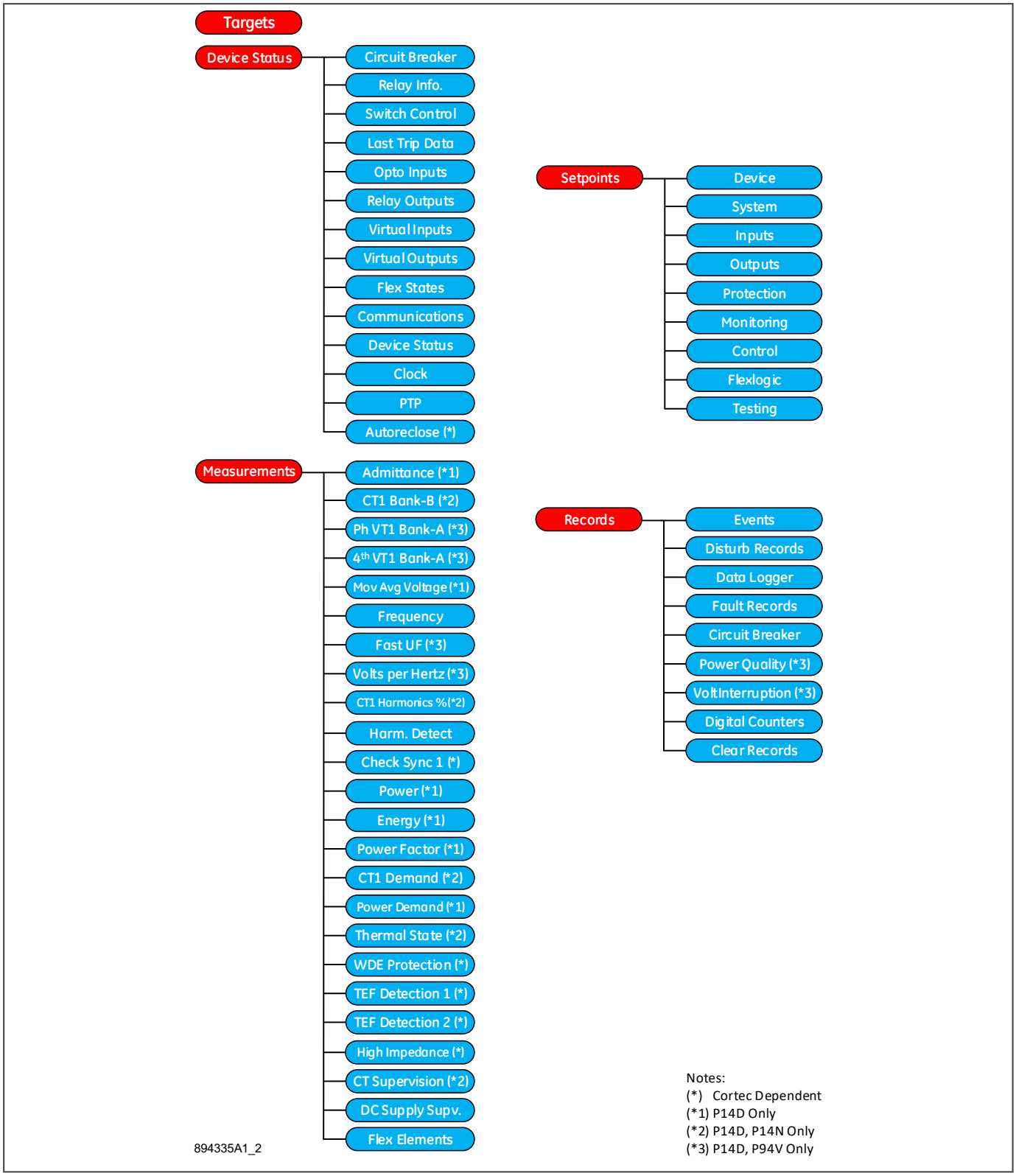

Figure 1: HMI main menu hierarchy

1.5 LOGIC DIAGRAMS

This technical manual contains many logic diagrams, which should help to explain the functionality of the device. Although this manual has been designed to be as specific as possible to the chosen product, it may contain diagrams, which have elements applicable to other products. If this is the case, a qualifying note will accompany the relevant part.

The logic diagrams follow a convention for the elements used, using defined colours and shapes. A key to this convention is provided below. We recommend viewing the logic diagrams in colour rather than in black and white. The electronic version of the technical manual is in colour, but the printed version may not be. If you need coloured diagrams, they can be provided on request by calling the contact centre and quoting the diagram number.

Figure 2: Key to logic diagrams

1.6 FUNCTIONAL OVERVIEW

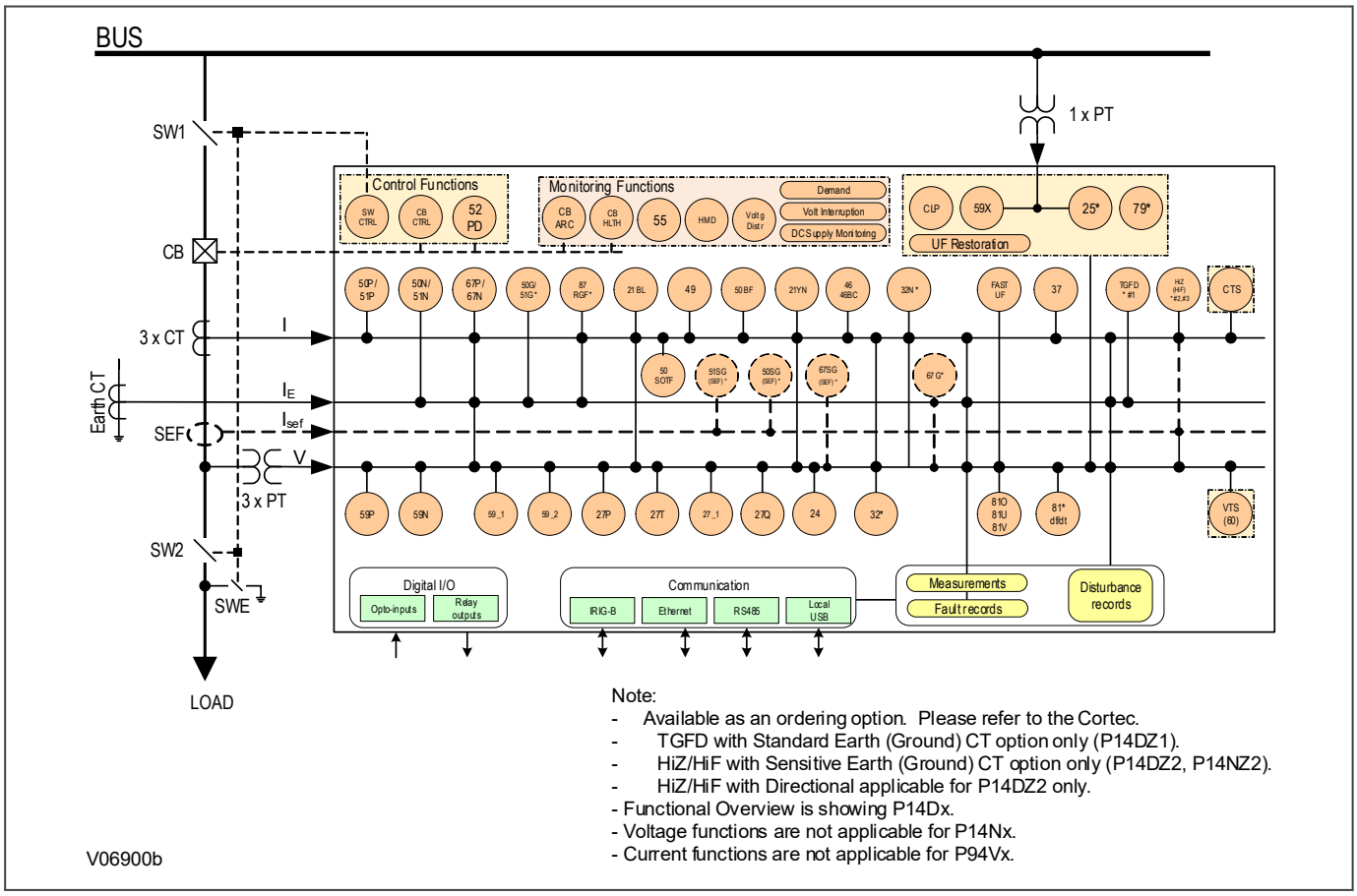

Figure 3: Functional overview

CHAPTER 2

SAFETY INFORMATION

2.1 CHAPTER OVERVIEW

This chapter provides information about the safe handling of the equipment. The equipment must be properly installed and handled in order to maintain it in a safe condition and to keep personnel safe at all times. You must be familiar with information contained in this chapter before unpacking, installing, commissioning, or servicing the equipment.

This chapter contains the following sections:

Chapter Overview 17

Health and Safety 18

Symbols 19

Installation, Commissioning and Servicing 20

Decommissioning and Disposal 25

Regulatory Compliance 26

2.2 HEALTH AND SAFETY

Personnel associated with the equipment must be familiar with the contents of this Safety Information.

When electrical equipment is in operation, dangerous voltages are present in certain parts of the equipment. Improper use of the equipment and failure to observe warning notices Could cause irreversible damage to the equipment and could lead to property damage, personal injury, and/or death.

Only qualified personnel may work on or operate the equipment. Qualified personnel are individuals who are:

- familiar with the installation, commissioning, and operation of the equipment and the system to which it is being connected.
- familiar with accepted safety engineering practises and are authorised to energise and de-energise equipment in the correct manner.
- trained in the care and use of safety apparatus in accordance with safety engineering practises
- trained in emergency procedures (first aid).

The documentation provides instructions for installing, commissioning and operating the equipment. It cannot, however cover all conceivable circumstances. In the event of questions or problems, do not take any action without proper authorisation. Please contact your local sales office and request the necessary information.

2.3 SYMBOLS

Throughout this manual you will come across the following symbols. You will also see these symbols on parts of the equipment.

Caution:
Refer to equipment documentation. Failure to do so could result in damage to the equipment

Warning:
Risk of electric shock

Warning:
Risk of damage to eyesight

Earth terminal. *Note: This symbol may also be used for a protective conductor (earth) terminal if that terminal is part of a terminal block or sub-assembly.*

Protective conductor (earth) terminal

Instructions on disposal requirements

Note:
The term 'Earth' used in this manual is the direct equivalent of the North American term 'Ground'.

2.4 INSTALLATION, COMMISSIONING AND SERVICING

2.4.1 LIFTING HAZARDS

Many injuries are caused by:

- Lifting heavy objects
- Lifting things incorrectly
- Pushing or pulling heavy objects
- Using the same muscles repetitively

Plan carefully, identify any possible hazards and determine how best to move the product. Look at other ways of moving the load to avoid manual handling. Use the correct lifting techniques and Personal Protective Equipment (PPE) to reduce the risk of injury.

2.4.2 ELECTRICAL HAZARDS

Caution:
All personnel involved in installing, commissioning, or servicing this equipment must be familiar with the correct working procedures.

Caution:
Consult the equipment documentation before installing, commissioning, or servicing the equipment.

Caution:
Always use the equipment as specified. Failure to do so will jeopardise the protection provided by the equipment.

Warning:
Removal of equipment panels or covers may expose hazardous live parts. Do not touch until the electrical power is removed. Take care when there is unlocked access to the rear of the equipment.

Warning:
Isolate the equipment before working on the terminal strips.

Warning:
Use a suitable protective barrier for areas with restricted space, where there is a risk of electric shock due to exposed terminals.

Caution:
Disconnect power before disassembling. Disassembly of the equipment may expose sensitive electronic circuitry. Take suitable precautions against electrostatic voltage discharge (ESD) to avoid damage to the equipment.

Warning:
NEVER look into optical fibres or optical output connections. Always use optical power meters to determine operation or signal level.

Warning:
Testing may leave capacitors charged to dangerous voltage levels. Discharge capacitors by reducing test voltages to zero before disconnecting test leads.

Caution:
Operate the equipment within the specified electrical and environmental limits.

Caution:
Before cleaning the equipment, ensure that no connections are energised. Use a lint free cloth dampened with clean water.

Note:
Contact fingers of test plugs are normally protected by petroleum jelly, which should not be removed.

2.4.3 FUSING REQUIREMENTS

Caution:
Where UL/CSA listing of the equipment is not required, a high rupture capacity (HRC) fuse type with a maximum current rating of 10A and a minimum dc rating of 250 V dc may be used for the auxiliary supply (for example Red Spot type NIT or TIA).

Caution:
Digital input circuits should be protected by a high rupture capacity NIT or TIA fuse with maximum rating of 2A. for safety reasons, current transformer circuits must never be fused. Other circuits should be appropriately fused to protect the wire used.

Caution:
CTs must NOT be fused since open circuiting them may produce lethal hazardous voltages

2.4.4 EQUIPMENT CONNECTIONS

Warning:
Terminals exposed during installation, commissioning and maintenance may present a hazardous voltage unless the equipment is electrically isolated.

Caution:
Tighten M3.5 clamping screws of heavy duty terminal block connectors to a nominal torque of 0.8 Nm.
Tighten captive screws of terminal blocks to a nominal torque value of 0.5 Nm.

Caution:
It is highly recommended that insulated crimp terminations for voltage and current connections.

Caution:
Always use the correct crimp terminal and tool according to the wire size.

Caution:
Watchdog (self-monitoring) contacts are provided to indicate the health of the device on some products. We strongly recommend that you hard wire these contacts into the substation's automation system, for alarm purposes.

2.4.5 PROTECTION CLASS 1 EQUIPMENT REQUIREMENTS

Caution:
Earth the equipment with the supplied PCT (Protective Conductor Terminal).

Caution:
Do not remove the PCT.

Caution:
The PCT is sometimes used to terminate cable screens. Always check the PCT's integrity after adding or removing such earth connections.

Caution:
Use a locknut or similar mechanism to ensure the integrity of stud-connected PCTs.

Caution:
The recommended minimum PCT wire size is 2.5 mm² for countries whose mains supply is 230 V (e.g. Europe) and 3.3 mm² for countries whose mains supply is 110 V (e.g. North America). This may be superseded by local or country wiring regulations.

Caution:
The PCT connection must have low-inductance and be as short as possible.

Caution:
All connections to the equipment must have a defined potential. Connections that are pre-wired, but not used, should be earthed, or connected to a common grouped potential.

2.4.6 PRE-ENERGISATION CHECKLIST

Caution:
Check voltage rating/polarity (rating label/equipment documentation).

Caution:
Check CT circuit rating (rating label) and integrity of connections.

Caution:
Check protective fuse or miniature circuit breaker (MCB) rating.

Caution:
Check integrity of the PCT connection.

Caution:
Check voltage and current rating of external wiring, ensuring it is appropriate for the application.

2.4.7 PERIPHERAL CIRCUITRY

Warning:
Do not open the secondary circuit of a live CT since the high voltage produced may be lethal to personnel and could damage insulation. Short the secondary of the line CT before opening any connections to it.

Note:
For this IED, the current transformers remain in the chassis if the unit is disassembled. Therefore external shorting of the CTs may not be required.

Caution:
Where external components such as resistors or voltage dependent resistors (VDRs) are used, these may present a risk of electric shock or burns if touched.

Warning:
Data communication cables with accessible screens and/or screen conductors, (including optical fibre cables with metallic elements), may create an electric shock hazard in a sub-station environment if both ends of the cable screen are not connected to the same equipotential bonded earthing system.

To reduce the risk of electric shock due to transferred potential hazards:

i. The installation shall include all necessary protection measures to ensure that no fault currents can flow in the connected cable screen conductor.

ii. The connected cable shall have its screen conductor connected to the protective conductor terminal (PCT) of the connected equipment at both ends.

iii. The protective conductor terminal (PCT) of each piece of connected equipment shall be connected directly to the same equipotential bonded earthing system.

iv. If, for any reason, both ends of the cable screen are not connected to the same equipotential bonded earth system, precautions must be taken to ensure that such screen connections are made safe before work is done to, or in proximity to, any such cables.

v. No equipment shall be connected to any download or maintenance circuits or connectors of this product except temporarily and for maintenance purposes only.

vi. Equipment temporarily connected to this product for maintenance purposes shall be protectively earthed (if the temporary equipment is required to be protectively earthed), directly to the same equipotential bonded earthing system as the product.

2.4.8 UPGRADING/SERVICING

Warning:
Do not insert or withdraw modules, PCBs or expansion boards from the equipment while energised, as this may result in damage to the equipment. Hazardous live voltages would also be exposed, endangering personnel.

Caution:
Internal modules and assemblies can be heavy and may have sharp edges. Take care when inserting or removing modules into or out of the IED.

2.5 DECOMMISSIONING AND DISPOSAL

Caution:
Before decommissioning, completely isolate the equipment power supplies (both poles of any dc supply). The auxiliary supply input may have capacitors in parallel, which may still be charged. To avoid electric shock, discharge the capacitors using the external terminals before decommissioning.

Caution:
Avoid incineration or disposal to water courses. This product cannot be disposed of as unsorted municipal waste in the European Union. For proper recycling return this product to your supplier or a designated collection point. For more information go to www.recyclethis.info

Note:
Store the unit indoors in a cool, dry place. If possible, store in the original packaging. Follow the storage temperature range outlined in the Specifications. To avoid deterioration of electrolytic capacitors, power up units that are stored in a deenergized state once per year, for one hour continuously.

2.6 REGULATORY COMPLIANCE

Compliance with the European Commission Direction on EMC, LVD and RoHS is via the self certification route.

2.6.1 EMC COMPLIANCE: 2014/30/EU

The product specific Declaration of Conformity (DoC) lists the relevant harmonised standard(s) or conformity assessment used to demonstrate compliance with the EMC directive.

2.6.2 LVD COMPLIANCE: 2014/35/EU

The product specific Declaration of Conformity (DoC) lists the relevant harmonized standard(s) or conformity assessment used to demonstrate compliance with the LVD directive.

Safety related information, such as the installation I overvoltage category, pollution degree and operating temperature ranges are specified in the Technical Data section of the relevant product documentation and/or on the product labelling.

Unless otherwise stated in the Technical Data section of the relevant product documentation, the equipment is intended for indoor use only. Where the equipment is required for use in an outdoor location, it must be mounted in a specific cabinet or housing to provide the equipment with the appropriate level of protection from the expected outdoor environment.

2.6.3 ROHS COMPLIANCE 2011/65/EU AND (EU) 2015/863

The product complies with the directive of the Council of the European Communities on harmonization of the laws of the Member States concerning restriction on usage of hazardous substances in electrical and electronic equipment (RoHS Directive 2011/65/EU). This conformity has been proved by tests performed according to the Council Directive in accordance with the standard EN 50581.

CHAPTER 3

HARDWARE DESIGN

3.1 CHAPTER OVERVIEW

This chapter provides information about the product's hardware design.

This chapter contains the following sections:

Chapter Overview 28
Hardware Architecture 29
Mechanical Implementation 30
Front Panel 35

3.2 HARDWARE ARCHITECTURE

The main components comprising devices based on the Multilin Agile platform are as follows:

- The housing, consisting of a front panel and connections at the rear
- The Main processor module consisting of the main CPU (Central Processing Unit), memory and an interface to the front panel HMI (Human Machine Interface)
- An I/O board consisting of output relay contacts and digital opto-inputs with optional redundant rear communications
- Power supply with rear communication connectors

All modules are connected by a parallel data and address bus, which allows the processor module to send and receive information to and from the other modules as required. There is also a separate serial data CAN bus for conveying sampled data from the modules to the CPU. These parallel and serial databuses are shown as a single interconnection module in the following figure, which shows typical modules and the flow of data between them.

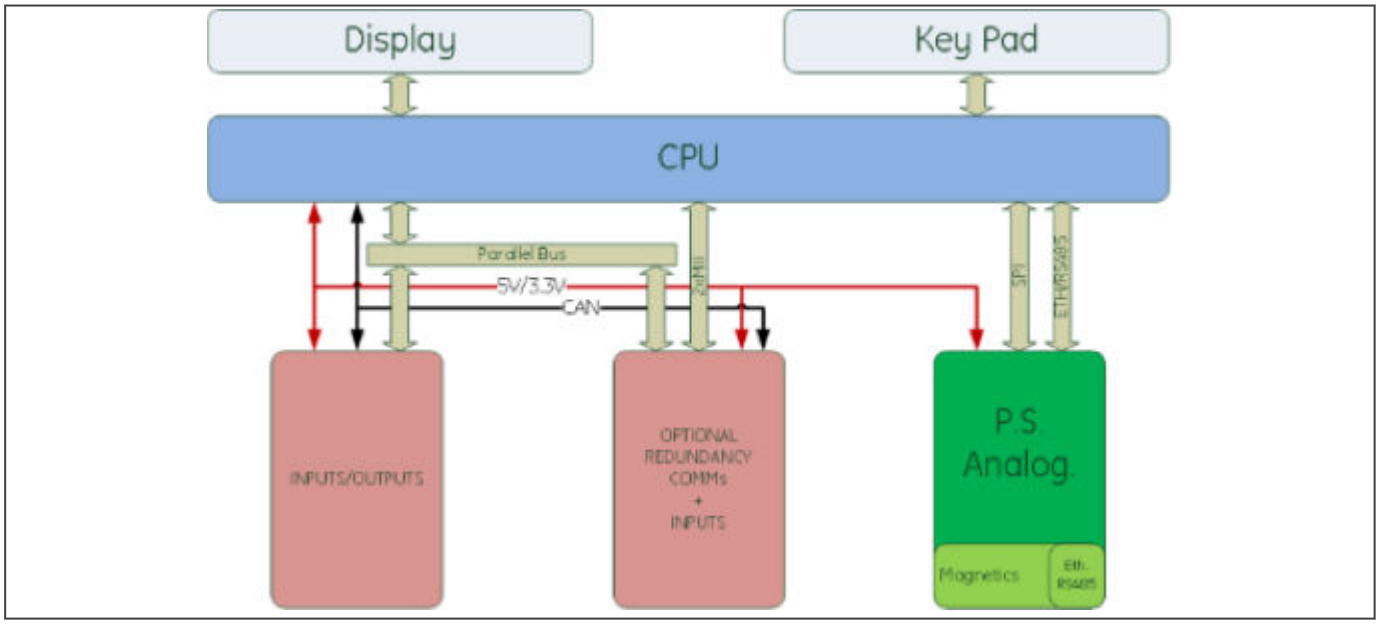

Figure 4: Hardware design overview

3.3 MECHANICAL IMPLEMENTATION

This equipment is suitable for mounting on the flat surface of a Type 1 Enclosure. All products based on the Multilin Agile platform have common hardware architecture. The hardware comprises two main parts; the cradle and the housing.

The cradle consists of the front panel which is attached to a carrier board into which all of the hardware boards and modules are connected. The products have been designed such that all the boards and modules comprising the product are fixed into the cradle and are not intended to be removed or inserted after the product has left the factory.

The housing comprises the housing metalwork, magnetic module and connectors at the rear into which the boards in the cradle plug into.

> *Note:*
> *The magnetic module remains attached to the chassis to avoid opening the current transformers circuit.*

Figure 5: Exploded view of IED - 20TE

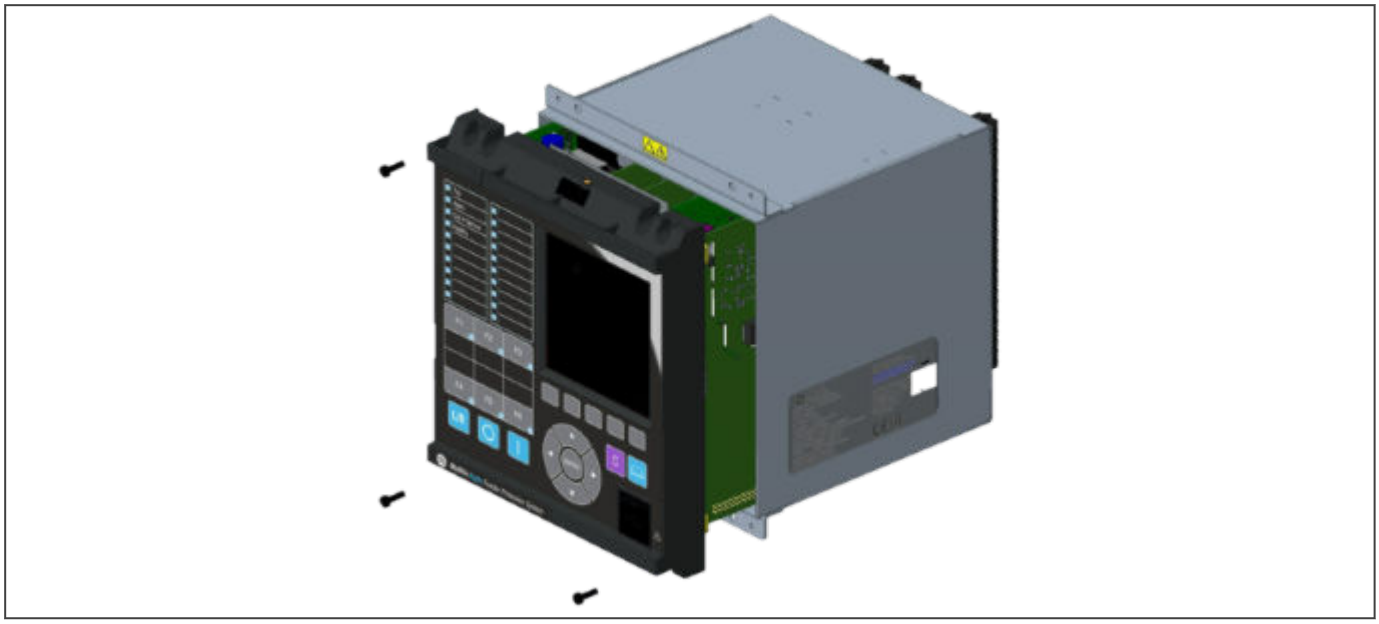

Figure 6: Exploded view of IED - 30TE IEC version

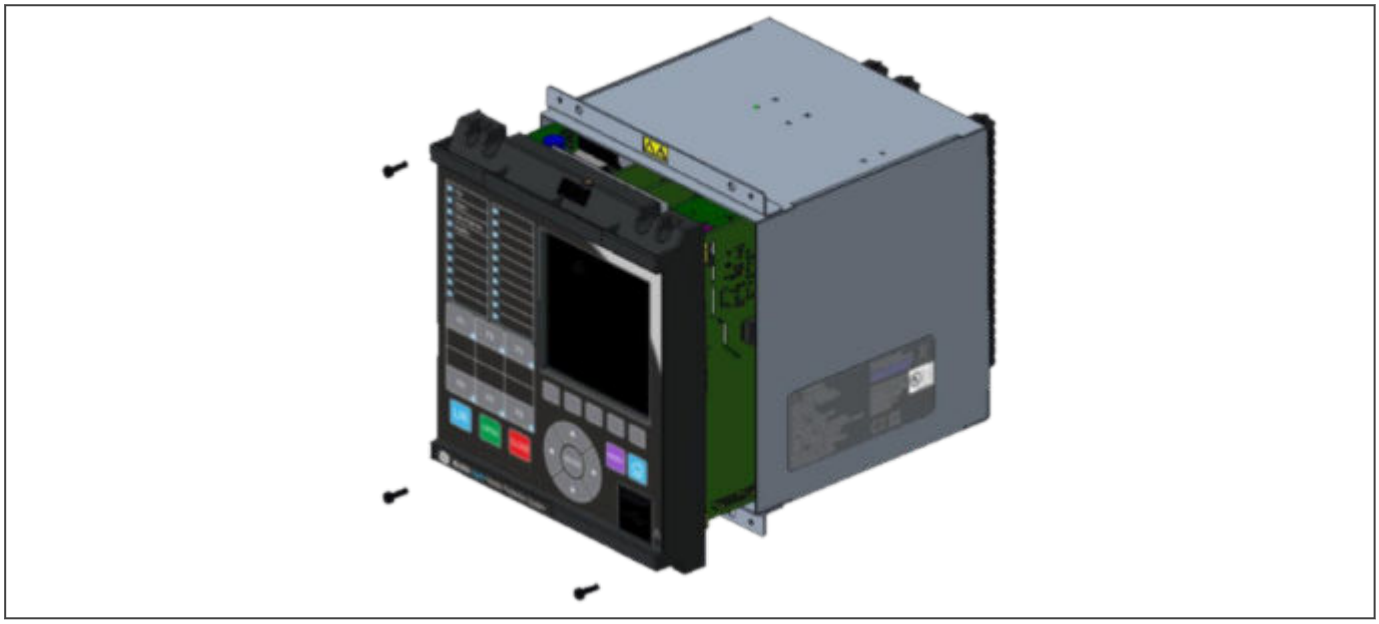

Figure 7: Exploded view of IED - 30TE ANSI version

3.3.1 HOUSING VARIANTS

The Multilin Agile range of products are implemented in one case size. Case dimensions for industrial products usually follow modular measurement units based on rack sizes. These are: U for height and TE for width, where:

- 1U = 1.75 inches = 44.45 mm
- 1TE = 0.2 inches = 5.08 mm

The products are available in panel-mount or standalone versions. All products are nominally 4U high. This equates to 177.8 mm or 7 inches.

The cases are pre-finished steel with a black covering of hybrid epoxi-polyester powder. This provides good grounding at all joints, providing a low resistance path to earth that is essential for performance in the presence of external noise.

The case width depends on the product type and its hardware options. The case dimensions are as follows:

Case Width (TE)	Case Width (mm)
20TE	102.4 mm (4 inches)
30TE	154.2 mm (6.07 inches)

3.3.2 20TE REAR PANEL

The basic 20TE rear panel consists of one 16-pole terminal block connector and one 24-pole 45 degree connector. An optional I/O module can be ordered with an additional 16-pole 45 degree connector.

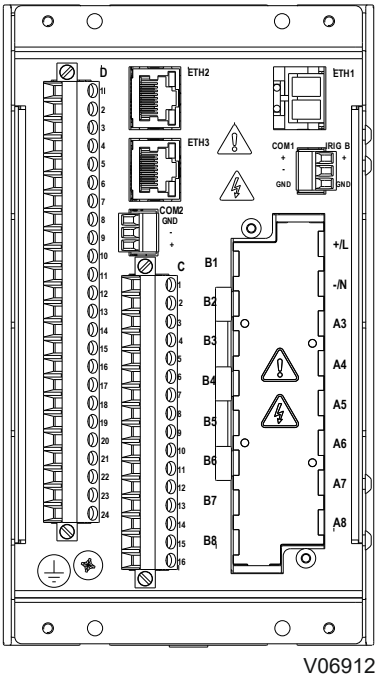

Figure 8: 20TE rear panel

3.3.3 30TE REAR PANEL

The basic 30TE rear panel consists of one 16-pole terminal block connector for PIN terminals options, one 24-pole 45 degree connector. In addition, an optional I/O module can be ordered with an additional 16-pole 45 degree connector. Up to two optional I/O modules can be ordered with an additional 24-pole 45 degree connector.

For RING terminals option, a 24-pole connector is available on slots C and F.

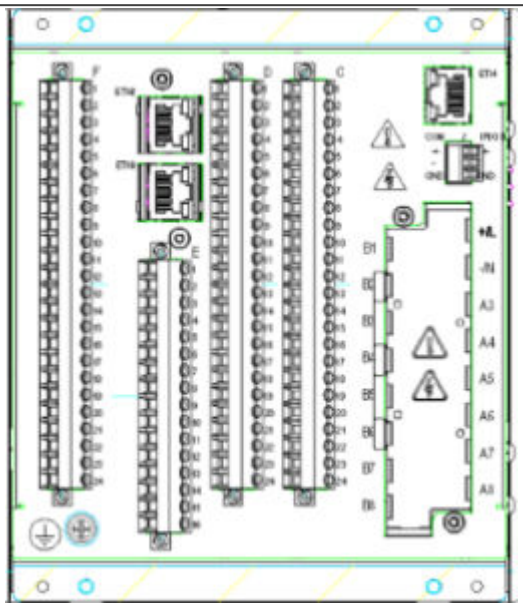

Figure 9: 30TE rear panel (PIN terminals)

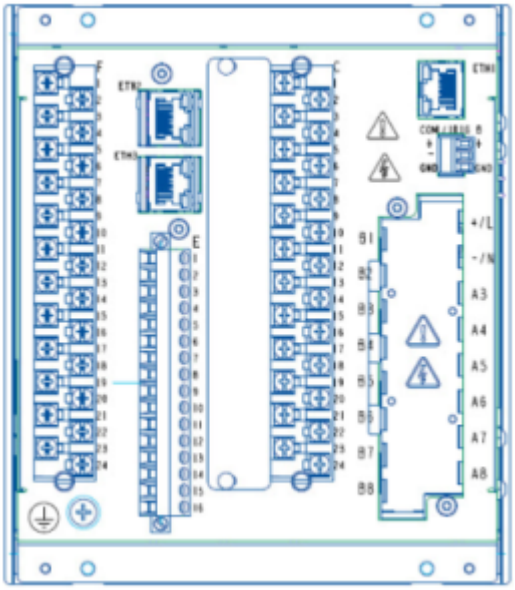

Figure 10: 30TE rear panel (Hybrid PIN + RING terminals)

3.3.4 TERMINAL CONNECTIONS

3.3.4.1 I/O OPTIONS (20TE)

Cortec I/O Option	Description
B	5 inputs (3 binary inputs + 2 Trip Circuit Supervision inputs) + 7 outputs configurable + 1 watchdog (critical fail)
C	8 inputs (6 binary inputs + 2 Trip Circuit Supervision inputs) + 5 outputs configurable + 1 watchdog (critical fail)
D	11 inputs (9 binary inputs + 2 Trip Circuit Supervision inputs) + 11 outputs configurable + 1 watchdog (critical fail)

Cortec I/O Option	Description
E	14 inputs (12 binary inputs + 2 Trip Circuit Supervision inputs) + 9 outputs configurable + 1 watchdog

3.3.4.2 I/O OPTIONS (30TE)

Cortec I/O Option	Description
D	11 inputs (9 binary inputs + 2 Trip Circuit Supervision inputs) + 11 outputs configurable + 1 watchdog (20TE/30TED)
E	14 inputs (12 binary inputs + 2 Trip Circuit Supervision inputs) + 9 outputs configurable + 1 watchdog (20TE/30TEE)
F, P (*1)	16 inputs (12 binary inputs + 4 Trip Circuit Supervision inputs) + 11 outputs configurable + 1 watchdog (30TEF, 30TEP (*1))
G, P (*2)	22 inputs (18 binary inputs + 4 Trip Circuit Supervision inputs) + 15 outputs configurable + 1 watchdog (30TEG, 30TER (*2))
H	30 inputs (24 binary inputs + 6 Trip Circuit Supervision inputs) + 21 outputs configurable + 1 watchdog (30TEH)
J	24 inputs (18 binary inputs + 6 Trip Circuit Supervision inputs) + 25 outputs configurable + 1 watchdog (30TEJ)

Note:
All I/O options have (at least) two Trip Circuit Supervision (TCS) inputs.

Note:
All I/O options have a Critical Fail NC output contact.

Note:
For details of terminal connections, refer to the Wiring Diagrams Appendix.

Note:
For details of inputs and output selections, refer to the Ordering Options Appendix

Note:
For details of input and output boards and settings configuration, refer to the "I/O Population - Type of Boards (usage and configuration) Appendix

Note:
*(*1): I/O Boards F and P have the same number of inputs and outputs, but board F has a Pin terminal option and board P has a Ring terminal option.*

Note:
*(*2): I/O Boards G and R have the same number of inputs and outputs, but board G has a Pin terminal option and board G has a Ring + Pin (Hybrid) terminal option.*

3.4 FRONT PANEL

The IEDs front panel provides an interface that will vary depending on the Cortec option selected (*). Features provided are a liquid crystal display (text based or graphical (*)), LED status indicators (fixed and programmable (*)), keypad with control keys (*), function keys (*), Local/Remote (L/R) key (*), Open (O)/Close (I) keys (*) and a USB program port.

The display and status indicators show device information automatically. The control keys are used to select the appropriate menu to enter setpoints or display measured values. The function keys are available for custom use (*). Local/Remote (L/R) key is used to select the local or remote mode (*). Open (O)/Close (I) keys (*) are used to be able to control the breaker from the HMI. The USB program port is also provided for connection with a computer.

3.4.1 20TE FRONT PANEL

Figure 11: Front panel (20TE)

The figure shows the front panel for the 20TE variant.

It consists of:

- LCD display (text based) with 2 dedicated navigation keys
- Keypad
- USB port
- 4 x programmable tri-colour LEDs with default configuration
- 4 x programmable tri-colour LEDs

3.4.2 30TE FRONT PANEL

30TE front panel has two variants (IEC or ANSI) both including color graphical liquid crystal display, keypad, function keys, fixed and extended programable LEDs, Local/Remote (L/R) key, Open (O)/Close(I) keys.

A colour graphical HMI display (ANSI variant and IEC variant) can be ordered with or without added Bay Control functionality for multiple SLDs configuration. For a detailed explanation, refer to the Cortec in Appendix A Ordering Options.

Depending on the Cortec option selected (IEC or ANSI), the symbology used on the Graphical HMI will be IEC or ANSI and some of the control keys name and color may vary.

The functionality of the keys (Clear/Reset, Read/Home, Open(O)/Close (I)) remains the same in both variants (IEC/ANSI) besides the name or the color. It is just the name and look and feel which varies from one to the other.

3.4.2.1 30TE IEC FRONT PANEL

Figure 12: Front panel (30TE IEC variant)

It consists of:

- LCD display (Graphical) with IEC symbols with 5 dedicated tab pushbuttons
- Keypad with Clear (C), Read, Enter and Up/Down/Left/Right selection keys
- USB port
- 4 x fixed function tri-colour LEDs

- 16 x programmable tri-colour LEDs
- 6 x programmable function keys with their corresponding 6 x programmable tri-colour LEDs
- Local/Remote (L/R) key to select Local/Remote
- Open (O)/Close (I) breaker control keys

3.4.2.2 30TE ANSI FRONT PANEL

Figure 13: Front panel (30TE ANSI variant)

It consists of:

- LCD display (Graphical) with IEC symbols with 5 dedicated tab pushbuttons
- Keypad with Reset, Home, Enter and Up/Down/Left/Right selection keys
- USB port
- 4 x fixed function tri-colour LEDs
- 16 x programmable tri-colour LEDs
- 6 x programmable function keys with their corresponding 6 x programmable tri-colour LEDs
- Local/Remote (L/R) key to select Local/Remote
- Open (green)/Close (red) breaker control keys

3.4.3 KEYPAD

The keypad may vary depending on the Cortec option selected, either 20TE or 30TE IEC/30TE ANSI (Multilin Agile).

20TE and 30TE have a different navigation through the menus using the keypad, although some of the keys may remain the same (look and feel and functionality), others may vary. 30TE has a wider range of keys and a graphical display to access to the IED menus, dedicated breaker control keys, Local/Remote key, SLD's. 20TE full navigation relies on the keypad and the text display, including breaker control for full navigation.

For 30TE, the functionality of the keys (Clear/Reset, Read/Home, Open(O)/Close (I)) remains the same in both variants (IEC/ANSI) besides the change of name and the colour.

3.4.3.1 CLEAR/RESET KEY FUNCTIONALITY

Multilin Agile IEDs (20TE and 30TE) since 8A release onwards, provide the capability of selecting the primary functionality of the ***Clear/Reset ke***y (either being Clear or Reset).

The ***Clear/Reset Key*** setting at ***SETPOINTS\DEVICE\INSTALLATION*** path defines the primary functionality of the Clear/Reset and the behaviour of Read/Home keys on the front panel.

The primary function of the key will be linked to the short pulsation of the key, and the secondary function of the key will be linked to the long pulsation of the key. The change on the functionality of the ***Clear/Reset key*** will affect the behaviour of the ***Read/Home key***.

When the ***Clear/Reset Key*** setting is configured as Clear:

- The ***short pulse*** execution of the ***Clear/Reset*** key will issue a ***Clear*** command. In the 20TE model only, the ***short pulse*** execution can also be used for ***setting confirmation***.
- The ***long pulse*** execution of the ***Clear/Reset*** key will issue a ***Reset*** command.
- The ***short pulse*** execution of the ***Read/Home*** key will show ***Targets*** (when Alarm LED is ON) and ***Last Trip*** data (when Trip LED is ON) for 20TE, and will navigate through ***Home Screens*** for 30TE.

When the ***Clear/Reset Key*** setting is configured as Reset:

- The ***short pulse*** execution of the ***Clear/Reset*** key will issue a ***Reset*** command.
- The ***short pulse*** execution of the ***Read/Home*** key will issue a ***Clear*** command. In the 20TE model only, the ***short pulse*** execution can also be used for ***setting confirmation***.
- The ***long pulse*** execution of the ***Read/Home*** key will show ***Targets*** (when Alarm LED is ON) and ***Last Trip*** data (when Trip LED is ON) for 20TE, and will navigate through ***Home Screens*** for 30TE.

3.4.3.2 20TE KEYPAD

The 20TE keypad consists of the following keys:

Key Type	Key Description	20TE
Standard Menu Navigation Keys	Four arrow keys (Up, Down, Left, Right) to navigate the menus, for setpoints and Up/Down/Right/Left value selection (organised around the Enter key).	
Enter Key	An Enter key for executing the chosen option	

Key Type	Key Description	20TE
Clear/Reset Key	**06A and previous releases (*1)** A ***Clear/Reset key*** for clearing the last enter key execution (short pulsation). Short pulsation can also be used for settings confirmation. If maintained (long pulsation), it will issue a Reset command.	
	08A and further releases (*2) When setting ***Clear/Reset*** Key is configured as ***Clear***: • The ***short pulse*** execution of Clear/Reset key will issue a ***Clear*** command. The short pulse execution can also be used for ***setting confirmation***. • The ***long pulse*** execution of Clear/Reset key will issue a ***Reset*** command. When setting ***Clear/Reset Key*** is configured as ***Reset***: • The ***short pulse*** execution of Clear/Reset key will issue a ***Rese***t command.	
Read/Home Key	**06A and previous releases (*1)** A ***Read*** key for accessing ***Targets*** menu if the ***Alarm LED*** is on. And, for accessing ***Last Trip*** data if the ***Trip LED*** is on. (Arrow keys now used for scrolling). When setting ***Clear/Reset Key*** is configured as ***Clear***:	
	08A and further releases (*2) • The ***short pulse*** execution of ***Read/Home*** key will show ***Targets*** if the Alarm LED is on, and ***Last Trip*** data if the ***Trip LED*** is on (Arrow keys now used for scrolling). When setting ***Clear/Reset*** Key is configured as ***Reset***: • The ***short pulse*** execution of ***Read/Home*** key will issue a ***Clear*** command. The short pulse execution can also be used for ***setting confirmation***. • The ***long pulse*** execution of ***Read/Home*** key will show ***Targets*** if the ***Alarm LED*** is on, and ***Last Trip*** data if the ***Trip LED*** is on (Arrow keys now used for scrolling).	
Hot Menu Navigation Keys (directly below LCD display)	Two x navigation keys (under LCD display). Two hot keys for accessing the Reset Command (Up) and CB Control (Down). These are situated directly below the LCD display.	

Note:
***(*1) For 06A and previous releases**: the Clear/Reset functionality of the Clear/Reset key is fixed and can't be configured.*
***(*2) For 08A and further releases**: the Clear/Reset primary functionality for short pulsation (Clear or Reset) is configurable through a setting at **Setpoints\Device\Installation\Clear/Reset Key** path. The Clear/Reset Key setting selection affects both to the Clear/Reset and Read/Home short and long pulsation behaviour.*

3.4.3.3 30TE KEYPAD (IEC, ANSI VARIANTS)

The 30TE keypad consists of the following keys:

Key Type	Key Description	30TE	
		IEC	ANSI
Standard Menu Navigation Keys	4 arrow keys (**Up**, **Down**, **Left**, **Right**) to navigate the menus, for setpoints and Up/Down/Right/Left value selection (organised around the Enter key).		
Enter Key	An **Enter** key for executing the chosen option.		
Clear/Reset Key	**06A and previous releases (*1)** A ***Clear/Reset*** key for clearing the last enter key execution (short pulsation). If maintained (long pulsation), it will issue a ***Reset command***. When nested on an HMI menu by pressing with short pulsation, the ***Clear/Reset*** key will return to the last selected Home screen. **08A and further releases (*2)** When setting ***Clear/Reset Key*** is configured as ***Clear***: • The ***short pulse*** execution of Clear/Reset key will issue a ***Clear*** command. • The ***long pulse*** execution of Clear/Reset key will issue a ***Reset*** command. When setting ***Clear/Reset Key*** is configured as ***Reset***: The ***short pulse*** execution of Clear/Reset key will issue a ***Reset*** command.		
Read/Home Key	**06A and previous releases (*1)** A ***Read/Home*** key for accessing and navigating through the up to 10 configurable ***Home Screens*** (at ***Setpoint \Device\Front Panel\Home Screens*** path). **08A and further releases (*2)** When setting ***Clear/Reset Key*** is configured as ***Clear***: • The ***short pulse*** execution of ***Read/Home*** key will navigate through the ***Home Screens*** (up to 10 Home Screens configurable at ***Setpoint\Device\Front Panel\Home Screens*** path). When setting ***Clear/Reset Key*** is configured as ***Reset***: • The ***short pulse*** execution of ***Read/Home*** key will issue a ***Clear*** command. • The ***long pulse*** execution of ***Read/Home*** key will navigate through the ***Home Screens*** (up to 10 Home Screens configurable at ***Setpoint \Device\Front Panel\Home Screens*** path).		

Key Type	Key Description	30TE			
		IEC		ANSI	
Hot Menu Navigation Keys (directly below LCD display)	5 x ***navigation keys/LCD tab pushbuttons*** (under LCD display). 5 keys for ***quick menu accessing*** to some of the menus displayed on the Graphical LCD. Also, can be used to select values using (<, >, ∨, ∧ and select) when a virtual keypad may appear in certain menus. These are situated directly below the LCD Two hot keys for accessing the ***Reset Command*** (Up) and ***CB Control*** (Down). These are situated directly below the LCD display.				
Functional Keys/ Programmable Pushbuttons	6 F**unction keys/programmable pushbuttons** for executing user programmable functions, with their corresponding 6 programmable tri-colour LEDs.				
Local/Remote (L/R) Key	***Local/Remote (L/R) Key*** to select Local/Remote.				
Open (O)/Close (I) Keys	**Open (O)/ Close (I) keys** for breaker control.	**Open**	**Close**	**Open**	**Close**

Note:
***(*1) For 06A and previous releases**: the Clear/Reset functionality of the Clear/Reset key is fixed and can't be configured.*
***(*2) For 08A and further releases**: the Clear/Reset primary functionality for short pulsation (Clear or Reset) is configurable through a setting at **Setpoints\Device\Installation\Clear/Reset Key** path. The Clear/Reset Key setting selection affects both to the Clear/Reset and Read/Home short and long pulsation behaviour.*

3.4.3.4 LIQUID CRYSTAL DISPLAY

20TE and 30TE case Cortec options have different LCD displays with different capabilities, the 20TE being a text display and the 30TE (both IEC and ANSI variants) a colour graphical one.

The 20TE is a high-resolution monochrome LCD display with 16 characters on 3 lines and a controllable back light.

The 30TE is a colour active matrix TFT (Thin Film Transistor) LCD (liquid crystal display) that uses amorphous silicon TFT as a switching device. This module is composed of a Transmissive type TFT- LCD Panel, driver circuit, back-light unit. The resolution of a 4.0" TFT-LCD contains 480 x 480 pixels, this being the active display area: 70 mm (H) x 70 mm (V).

30TE IEC and ANSI variants are customised to show either IEC or ANSI symbols for the Single Line Diagram (SLD) configuration. Depending on the Cortec selected, the IED will also have the capability to display either one or several (up to 6 configurable SLD's) in the Bay Control option.

3.4.3.5 USB PORT

Both 20TE and 30TE have a USB port situated at the bottom of the front panel. The differences between the 20TE and the 30TE USB port are:

- Placement: at the bottom left-hand corner for the 20TE, and the bottom right-hand corner for the 30TE
- Type of cover: a sliding cover for the 20TE and a rugged cover for the 30TE, with enclosure protection against dust and dripping water (front face) of IP52 for the 20TE and IP54 for the 30TE, as per IEC 60529:2013

The USB port is used to communicate with a locally connected PC. It has two main purposes:

- To transfer settings information to/from the PC from/to the device
- For downloading firmware updates and menu text editing

The port is intended for temporary connection during testing, installation and commissioning. It is not intended to be used for permanent SCADA communications. This port supports the MODBUS communication protocol only, to allow communication with a range of protection equipment, and between the device and the Windows-based support software package.

You can connect the unit to a PC with a USB cable up to 5 m in length.

The inactivity timer for the front port is set to 15 minutes. This controls how long the unit maintains its level of password access on the front port. If no messages are received on the front port for 15 minutes, any password access level that has been enabled is cancelled.

Caution:
When not in use, always close the cover of the USB port to prevent contamination.

3.4.3.6 FIXED FUNCTION LEDS

Four fixed-function LEDs on the left-hand side of the front panel indicate the following conditions:

- Trip (Red) LED can be triggered by the operation of protection, control, or monitoring elements with functions selected as "Trip" or "Latched Trip". This will be linked to Any Trip FlexOperand. This indicator always latches, and a reset command must be initiated to allow the latch to be reset
- Alarm (Orange) LED flashes when the IED registers an alarm, that can be triggered by operation of protection, control, or monitoring elements with functions selected as "Alarm" or "Latched Alarm", fault, event or maintenance record. This will be linked to Any Alarm FlexOperand. This indicator latches, or not, depending on the setting selected. If latched, a reset command must be initiated to allow the latch to be reset. For non-latched alarms the LED flashes until the alarm conditions disappear, then it switches OFF. For latched alarms the LED flashes until the alarm conditions disappear, then changes to constantly ON. When the alarms are cleared, the LED switches OFF
- Out of service (Red) is ON when the IEDs functions are unavailable
- Healthy (Green) is ON when the IED is in correct working order, and should be ON at all times. It goes OFF if the unit’s self-tests show there is an error in the hardware or software. The state of the Out of Service and healthy LED is reflected by the watchdog contacts at the back of the unit

Note:
*The reset of the Latched LEDs can be done through command or by continuing to press (long pulsation) the **Clear/Reset** key.*

3.4.3.7 LED PROGRAMMING

All programmable LEDs can be set on ***SETPOINTS\DEVICE\FRONT PANEL\PROG.LED*** menu.

LED x Name

Range:	Up to 13 alphanumeric characters
This setpoint is used to select the LED name by choosing up to 13 alphanumeric characters.	

LED x Trigger (Red)	
Range:	Off Any FlexLogic operand
This setpoint requires the assigning of the FlexLogic operand to trigger the selected RED LED upon operation.	

LED x Trigger (Green)	
Range:	Off Any FlexLogic operand
This setpoint requires assigning of the FlexLogic operand to trigger the selected GREEN LED upon operation.	

For a Tricolour LED, two Operands can be mapped via Trigger (Red & Green) settings or through the PSL.

- When Trigger (RED) or Input 1 (PSL) is high, the Red LED will illuminate.
- When Trigger (Green) or Input 2 (PSL) is high, the Green LED will illuminate.
- When both are high, the Amber LED will illuminate.

> *Note:*
> *If the Trigger setting is Off or the Input Operand is not mapped in the PSL, it should be considered Low (0).*

For Example:

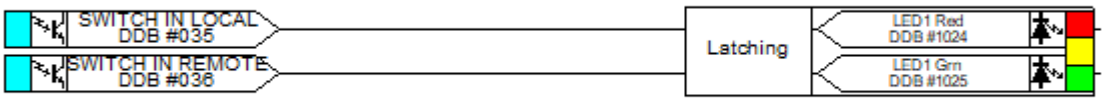

Input	Trigger Configuration	State	LED Output
Local Binary Input	Red Trigger	High(1)	Red
Remote Binary Input	Green Trigger	Low(0)	

Input	Trigger Configuration	State	LED Output
Local Binary Input	Red Trigger	Low(0)	Green
Remote Binary Input	Green Trigger	High(1)	

Input	Trigger Configuration	State	LED Output
Local Binary Input	Red Trigger	High(1)	Yellow
Remote Binary Input	Green Trigger	High(1)	

Input	Trigger Configuration	State	LED Output
Local Binary Input	Red Trigger	High(1)	Red
Not Configured	Green Trigger	Low(0)	

Input	Trigger Configuration	State	LED Output

Not Configured	Red Trigger	Low(0)	Green
Remote Binary Input	Green Trigger	High(1)	

LED x Type	
Range:	Self-Reset Latched
This setpoint defines the type of LED indication as either Self-Reset (LED resets after the the FlexLogic operand drops out), or Latched (LED stays latched upon dropping out of the FlexLogic operand).	

3.4.3.7.1 DEFAULT LEDS

All LEDs, including LED 1 to LED 4, are fully configurable. By default, LED 1 to LED 4 are assigned to common status indications. However, users can reconfigure them as needed. The default status indicators for these LEDs are as follows:

LED 1: TRIP (RED Color, Latched Type)

Trip (Red) LED can be triggered by the operation of protection, control, or monitoring elements with functions selected as "Trip" or "Latched Trip". This will be linked to the Any Trip FlexOperand. This indicator always latches, and a reset command must be initiated to allow the latch to be reset.

LED 2: ALARM (Orange Color, Self-Reset Type)

Alarm (Orange) LED flashes when the IED registers an alarm that can be triggered by operation of the protection, control, or monitoring elements, with functions selected as "Alarm" or "Latched Alarm", fault, event or maintenance record. This will be linked to the Any Alarm FlexOperand. This indicator latches, or not, depending on the setting selected. If latched, a reset command must be initiated to allow the latch to be reset. For non-latched alarms the LED flashes until the alarm conditions disappear, and then it switches OFF. For latched alarms the LED flashes until the alarm conditions disappear, then changes to constantly ON. When the alarms are cleared, the LED switches OFF.

Note:
Only LED2, which is by default configured for Alarm, exhibits flashing/blinking behavior when the Any Alarm operand becomes true or when the relay is Not in Service. If any other LED is assigned for alarm indication by setting its trigger to the Any Alarm operand, the flashing/blinking behavior will not be available. Instead, the LED will simply turn On or Off, depending on the operand state.

LED 3: OUT OF SERVICE (Red Color, Self-Reset Type)

Any LED assigned for Out of Service indication will turn ON under the following conditions:

- When the relay is not in simulation mode, the LED will turn ON when the operand Out Of Service becomes True.
- When the relay is in simulation mode, the LED will always turn ON, regardless of the state of the Out Of Service operand.

LED 4: HEALTHY (Green Color, Self-Reset Type)

Healthy (Green) is ON when the IED is in correct working order, and should be ON at all times. It goes OFF if the units self-tests show there is an error in the hardware or software. The state of the Out of Service and healthy LED is reflected by the watchdog contacts at the back of the unit.

20TE Front Panel with Four LEDs:

LED	Name	Trigger (Red)	Trigger (Green)	Type
LED1	Trip	Any Trip	OFF	Latched

LED2	Alarm	Any Alarm	Any Alarm	Self-Reset
LED3	Out of Service	Out of Service	OFF	Self-Reset
LED4	Healthy	OFF	Healthy	Self-Reset
LED5	LED 5	OFF	OFF	Self-Reset
LED6	LED 6	OFF	OFF	Self-Reset
LED7	LED 7	OFF	OFF	Self-Reset
LED8	LED 8	OFF	OFF	Self-Reset

30TE Front Panel with 26 LEDs:

LED	Name	Trigger (Red)	Trigger (Green)	Type
LED1	Trip	Any Trip	OFF	Latched
LED2	Alarm	Any Alarm	Any Alarm	Self-Reset
LED3	Out of Service	Out of Service	OFF	Self-Reset
LED4	Healthy	OFF	Healthy	Self-Reset
LED5(20)	LED 5(20)	OFF	OFF	Self-Reset
LED21(26)	PB 1(6)	OFF	PB 1 ON (PB 6 ON)	Self-Reset

20TE Front Panel with Four LEDs:

LED	Name	Trigger (Red)	Trigger (Green)	Type
LED1	Trip	Any Trip	OFF	Latched
LED2	Alarm	Any Alarm	Any Alarm	Self-Reset
LED3	Out of Service	Out of Service	OFF	Self-Reset
LED4	Healthy	OFF	Healthy	Self-Reset
LED5	Pickup	OFF	Any Start	Self-Reset
LED6	Stopped	OFF	Motor Stopped	Self-Reset
LED7	Starting	Motor Starting	OFF	Self-Reset
LED8	Running	OFF	Motor Running	Self-Reset

30TE Front Panel with 26 LEDs:

LED	Name	Trigger (Red)	Trigger (Green)	Type
LED1	Trip	Any Trip	OFF	Latched
LED2	Alarm	Any Alarm	Any Alarm	Self-Reset
LED3	Out of Service	Out of Service	OFF	Self-Reset
LED4	Healthy	OFF	Healthy	Self-Reset
LED5	Pickup	OFF	Green	Self-Reset
LED6	Stopped	OFF	Motor Stopped	Self-Reset
LED7	Starting	Motor Starting	OFF	Self-Reset
LED8	Running	OFF	Motor Running	Self-Reset
LED9	Start Inhibit	Start Inhibit	OFF	Self-Reset
LED10	Ground Fault	IN1>1 GF Trip OP	OFF	Self-Reset
LED11	Thermal Trip	Thermal Trip OP	OFF	Self-Reset
LED12 - LED20	LED 13(20)	OFF	OFF	Self-Reset

LED21 - 26	PB 1(6)	OFF	PB 1 ON (PB 6 ON)	Self-Reset

3.4.3.8 PROGRAMMABLE FUNCTION KEYS/PUSHBUTTONS

The programmable function keys are available for custom use for certain models.

Adjacent to these function keys are programmable LEDs, which are usually set to be associated with their respective function keys.

30TE has six programmable function keys with their corresponding 6 programmable tri-colour LEDs.

Function keys can be programmed in ***SETPOINTS\DEVICE\FRONT PANEL\PROGRAMMABLE PB's.***

The function keys programmable LEDs can be programmed in ***SETPOINTS\DEVICE\FRONT PANEL\PROG.LED*** from LED 21 until LED 26.

3.4.3.9 LOCAL/REMOTE KEY

The Local/Remote (L/R) key is available for certain models.

30TE has one Local/Remote (L/R) key to select Local/Remote mode.

3.4.3.10 OPEN/CLOSE BREAKER CONTROL KEYS

The Open (O)/Close (I) breaker control keys are available for certain models.

The 30TE IEC variant has two blue keys for Open (O)/Close (I).

The 30TE ANSI variant has one green key for Open (O) and one red key for Close (I).

CHAPTER 4

SOFTWARE DESIGN

4.1 CHAPTER OVERVIEW

This chapter describes the software design of the IED.

This chapter contains the following sections:

Chapter Overview 48
Software Design Overview 49
System Level Software 50
Platform Software 52
Protection and Control Functions 53

4.2 SOFTWARE DESIGN OVERVIEW

The range of products based on the Multilin Agile platform can be conceptually categorised into several elements as follows:

- The system level software
- The platform software
- The protection and control software

These elements are not distinguishable to the user, and the distinction is made purely for the purposes of explanation.

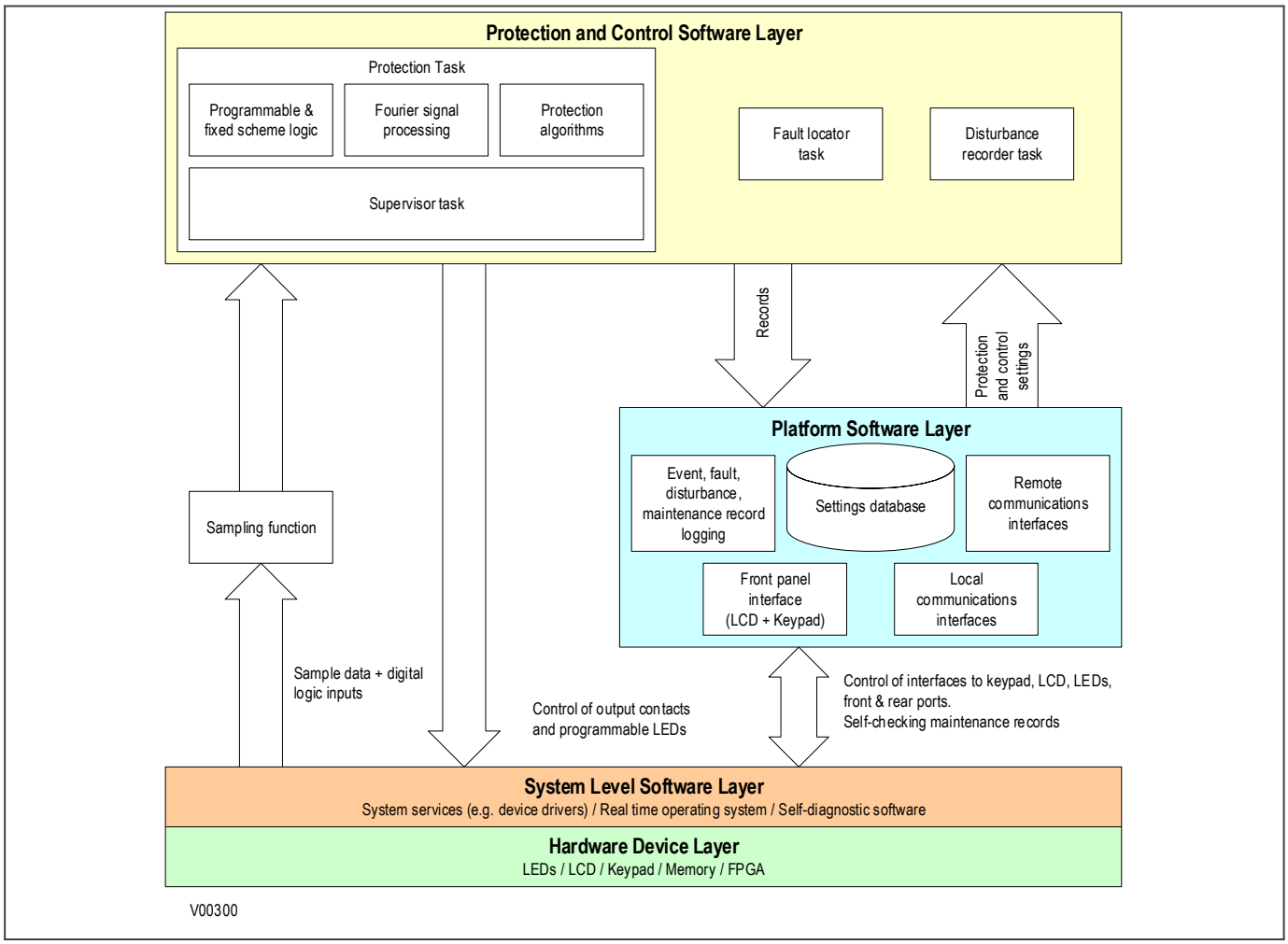

Figure 14: Software structure

The software can be divided into a number of functions as illustrated above. Each function is further broken down into a number of separate tasks. These tasks are then run according to a scheduler. They are run at either a fixed rate or they are event driven. The tasks communicate with each other as required.

4.3 SYSTEM LEVEL SOFTWARE

4.3.1 REAL TIME OPERATING SYSTEM

The real-time operating system is used to schedule the processing of the various tasks. This ensures that they are processed in the time available and in the desired order of priority. The operating system also plays a part in controlling the communication between the software tasks.

4.3.2 SYSTEM SERVICES SOFTWARE

The system services software provides the layer between the hardware and the higher-level functionality of the platform software and the protection and control software. For example, the system services software provides drivers for items such as the LCD display, the keypad and the remote communication ports. It also controls things like the booting of the processor and the downloading of the processor code into RAM at startup.

4.3.3 SELF-DIAGNOSTIC SOFTWARE

The device includes several self-monitoring functions to check the operation of its hardware and software while in service. If there is a problem with the hardware or software, it should be able to detect and report the problem.

If a problem is detected by the self-monitoring functions, the device attempts to store a record to allow the nature of the problem to be communicated to the user.

The self-monitoring is implemented in two stages: firstly a thorough diagnostic check which is performed on boot-up, and secondly a continuous self-checking operation, which checks the operation of the critical functions while the device is in service.

4.3.4 STARTUP SELF-TESTING

The self-testing takes a few seconds to complete, during which time the IEDs measurement, recording, control, and protection functions are unavailable. On a successful start-up and self-test, the ‘Healthy' state LED on the front of the device is switched on. If a problem is detected during the start-up testing, the device remains out of service until it is manually restored to working order.

The operations that are performed at start-up are:

1. System boot
2. System software initialisation
3. Platform software initialisation and monitoring

4.3.4.1 SYSTEM BOOT

The integrity of the Flash memory is verified using a checksum before the program code and stored data is loaded into RAM for execution by the processor. When the loading has been completed, the data held in RAM is compared to that held in the Flash memory to ensure that no errors have occurred in the data transfer and that the two are the same. The entry point of the software code in RAM is then called. This is the IEDs initialisation code.

4.3.4.2 SYSTEM LEVEL SOFTWARE INITIALISATION

The initialisation process initialises the processor registers and interrupts, starts the watchdog timers (used by the hardware to determine whether the software is still running), starts the real-time operating system and creates and starts the supervisor task. In the initialisation process the device checks the following:

- The integrity of the non-volatile memory, which is used to store event, fault and disturbance records
- The operation of the LCD controller
- The watchdog operation

At the conclusion of the initialization software the supervisor task begins the process of starting the platform software.

4.3.4.3 PLATFORM SOFTWARE INITIALISATION AND MONITORING

When starting the platform software, the IED checks the following:

- The integrity of the data held in non-volatile memory (using a checksum)
- The operation of the real-time clock
- The presence and condition of the input board
- The analog data acquisition system (it does this by sampling the reference voltage)

At the successful conclusion of all of these tests the unit is entered into service and the application software is started up.

4.3.5 CONTINUOUS SELF-TESTING

When the IED is in service, it continually checks the operation of the critical parts of its hardware and software. The checking is carried out by the system services software and the results are reported to the platform software. The functions that are checked are as follows:

- The Flash memory containing all program code and language text is verified by a checksum
- The code and constant data held in system memory is checked against the corresponding data in Flash memory to check for data corruption
- The system memory containing all data other than the code and constant data is verified with a checksum
- The integrity of the digital signal I/O data from the opto-isolated inputs and the output relay coils is checked by the data acquisition function every time it is executed.
- The operation of the analogue data acquisition system is continuously checked by the acquisition function every time it is executed. This is done by sampling the reference voltages
- The operation of the optional Ethernet board is checked by the software on the main processor card. If the Ethernet board fails to respond an alarm is raised and the card is reset in an attempt to resolve the problem.
- The operation of the optional IRIG-B function is checked by the software that reads the time and date from the board

In the event that one of the checks detects an error in any of the subsystems, the platform software is notified and it attempts to log a maintenance record.

If the self-check detected is a minor error the IED continues in service and the cause of the error is displayed in the IED records as well as in the Targets menu. If the self-check is a major error, the device takes itself permanently out of service. In both cases the Alarm LED is active while the self-test error is active.This is indicated by the 'Healthy' state LED on the front of the device, which switches OFF, and the watchdog contact which switches ON.

4.4 PLATFORM SOFTWARE

The platform software has three main functions:

- To control the logging of records generated by the protection software, including alarms, events, faults, and maintenance records
- To store and maintain a database of all of the settings in non-volatile memory
- To provide the internal interface between the settings database and the user interfaces, using the front panel interface and the front and rear communication ports

4.4.1 RECORD LOGGING

The logging function is used to store all alarms, events, faults and maintenance records. The records are stored in non-volatile memory to provide a log of what has happened. The IED maintains several types of log on a first in first out basis (FIFO). These are:

- Targets
- Event records
- Disturbance records
- Data logger
- Fault records
- Circuit breaker health records
- Digital counter records
- Maintenance records

The logs are maintained such that the oldest record is overwritten with the newest record. The logging function can be initiated from the protection software. The platform software is responsible for logging a maintenance record in the event of an IED failure. This includes errors that have been detected by the platform software itself or errors that are detected by either the system services or the protection software function. See the Monitoring and Control chapter for further details on record logging.

4.4.2 SETTINGS DATABASE

The settings database contains all the settings and data, which are stored in non-volatile memory. The platform software manages the settings database and ensures that only one user interface can modify the settings at any one time. This is a necessary restriction to avoid conflict between different parts of the software during a setting change.

Changes to protection settings and disturbance recorder settings, are first written to a temporary location SRAM memory. This is sometimes called 'Scratchpad' memory. These settings are not written into non-volatile memory immediately. This is because a batch of such changes should not be activated one by one, but as part of a complete scheme. Once the complete scheme has been stored in SRAM, the batch of settings can be committed to the non-volatile memory where they will become active.

4.4.3 INTERFACES

The settings and measurements database must be accessible from all of the interfaces to allow read and modify operations. The platform software presents the data in the appropriate format for each of the interfaces (LCD display, keypad and all the communications interfaces).

4.5 PROTECTION AND CONTROL FUNCTIONS

The protection and control software processes all of the protection elements and measurement functions. To achieve this it has to communicate with the system services software, the platform software as well as organise its own operations.

The protection task software has the highest priority of any of the software tasks in the main processor board. This ensures the fastest possible protection response.

The protection and control software provides a supervisory task, which controls the start-up of the task and deals with the exchange of messages between the task and the platform software.

4.5.1 ACQUISITION OF SAMPLES

After initialisation, the protection and control task waits until there are enough samples to process. The acquisition of samples on the main processor board is controlled by a 'sampling function' which is called by the system services software.

The sampling rate is adapted to the frequency of the electrical power system to provide a fixed sampling acquisition rate of 64 samples/ cycle.

The sampling function waits until the reception of 8 consecutive samples, it calculates the DFT or RMS value of the last 64 samples,--8 consecutive blocks of 8 sample each-- and raises an interrupt to the rest of the system indicating a new measurement has been acquired. Thus, the sampling rate of the protection system is executed 8 times per electrical power cycle.

4.5.2 FREQUENCY TRACKING

The device provides a frequency tracking algorithm so that there are always 64 samples per cycle irrespective of frequency drift within a certain frequency range (see technical specifications). If the frequency falls outside this range, the sample rate reverts to its default rate of 3200 samples for 50 Hz or 3840 samples for 60 Hz.

Frequency measurement is accomplished by measuring the time between zero crossings of the composite signal of three-phase bus voltages. The signals are passed through a low pass filter to prevent false zero crossings.

Frequency tracking utilises the measured frequency to set the sampling rate for voltage which results in better accuracy for the Discrete Fourier Transform (DFT) algorithm for off nominal frequencies. The frequency tracking is switched automatically from main source to the low priority source by an algorithm, if the frequency detected from the main or high priority source input is declared invalid. If a stable frequency signal is not available from all sources, then the tracking frequency defaults to the nominal system frequency.

The following table shows high to low priority sources depending on the relay model type:

Priority	P14D	P14N	P94V
1st	3VT	CT	3VT
2nd	CT	None	Vx
3rd	Vx	None	None

The minimum voltage/current needed for frequency calculation is 6% Vn/In. The frequency is limited to the range between 15 Hz and 70 Hz.

4.5.3 FOURIER SIGNAL PROCESSING

When the protection and control task is re-started by the sampling function, it calculates the Fourier components for the analogue signals. Although some protection algorithms use some Fourier-derived harmonics (e.g. second harmonic for magnetising inrush), most protection functions are based on the Fourier-derived fundamental

components of the measured analogue signals. The Fourier components of the input current and voltage signals are stored in memory so that they can be accessed by all of the protection elements' algorithms.

The Fourier components are calculated using single-cycle Fourier algorithm. This Fourier algorithm always uses the most recent 64 samples.

Most protection algorithms use the fundamental component. In this case, the Fourier algorithm extracts the power frequency fundamental component from the signal to produce its magnitude and phase angle. This can be represented in either polar format or rectangular format, depending on the functions and algorithms using it.

The Fourier function acts as a filter, with zero gain at DC and unity gain at the fundamental, but with good harmonic rejection for all harmonic frequencies up to the nyquist frequency. Frequencies beyond this nyquist frequency are known as alias frequencies, which are introduced when the sampling frequency becomes less than twice the frequency component being sampled. However, the alias frequencies are significantly attenuated by an anti-aliasing filter (low pass filter), which acts on the analogue signals before they are sampled. The ideal cut-off point of an anti-aliasing low pass filter would be set at:

$$(\text{samples per cycle}) \times (\text{fundamental frequency})/2$$

At 64 samples per cycle, this would be nominally 1600 Hz for a 50 Hz system, or 1920 Hz for a 60 Hz system.

4.5.4 FLEXLOGIC EQUATION EDITOR

The purpose of the Flexlogic Equation Editor (Flexlogic Equation Editor & Logic Designer) is to allow you to configure your own protection schemes to suit your particular application. This is done with programmable logic gates and delay timers.

The input to the Flexlogic Equation Editor is any combination of the status of the digital input signals from the opto-isolators on the input board, virtual inputs, virtual outputs, output relays, remote inputs, remote GOOSES, remote inputs DPS, the outputs of the protection elements such as protection starts and trips. The Flexlogic Equation Editor consists of software logic gates and timers. The logic gates can be programmed to perform a range of different logic functions and can accept any number of inputs. The timers are used either to create a programmable delay, and/or to condition the logic outputs, such as to create a pulse of fixed duration on the output regardless of the length of the pulse on the input. The outputs of the Flexlogic Equation Editor can be assigned to the LEDs, or function keys (for 30TE) on the front panel of the IED and the relay output contacts at the rear.

The Flexlogic Equation Editor can be configured to create complex schemes. Because of this, the Flexlogic Equation Editor design is achieved by means of Flexlogic Equation Editor & Logic Designer. This is available as part of the EnerVista Configuration settings application software.

Note:
Flexlogic Equation Editor (Flexlogic Equation Editor & Logic Designer) is only available in offline mode. After configuring the logic offline it can be sent to the IED.

4.5.5 EVENT RECORDING

A change in any digital input signal or protection element output signal is used to indicate that an event has taken place. When this happens, the protection and control task sends a message to the supervisor task to indicate that an event is available to be processed and writes the event data to a fast buffer controlled by the supervisor task. When the supervisor task receives an event record, it instructs the platform software to create the appropriate log in non-volatile memory (flash memory). The operation of the record logging to RAM is slower than the supervisor buffer. This means that the protection software is not delayed waiting for the records to be logged by the platform software. However, in the rare case when a large number of records to be logged are created in a short period of time, it is possible that some will be lost.

Maintenance records are created in a similar manner, with the supervisor task instructing the platform software to log a record when it receives a maintenance record message. However, it is possible that a maintenance record may be triggered by a fatal error in the device, in which case it may not be possible to successfully store a maintenance record, depending on the nature of the problem.

For more information, see the Monitoring and Control chapter.

4.5.6 DISTURBANCE RECORDER

The disturbance recorder can record the waveforms of the calibrated analogue channels, plus the values of the digital signals. The number of records is user selectable up to 16 and the maximum length of one record at 8 samples/cycle is approximately 4895.125 cycles. The disturbance recorder is supplied with data by the protection and control task once per cycle, and collates the received data into the required length disturbance record. The disturbance records can be extracted using EnerVista Configuration software or the SCADA system, which can also store the data in COMTRADE format, allowing the use of other packages to view the recorded data.

For more information, see the Monitoring and Control chapter.

4.5.7 FAULT LOCATOR

The fault locator uses the analogue input signals to calculate the fault location. The result is returned to the protection and control task, which includes it in the fault record. The pre-fault and post-fault voltages are also presented in the fault record. When the fault record is complete, including the fault location, the protection and control task sends a message to the supervisor task to log the fault record.

CHAPTER 5

CONFIGURATION

5.1 CHAPTER OVERVIEW

This chapter provides some general information about the technical manual and an introduction to the device(s) described in this technical manual.

This chapter contains the following sections:

Chapter Overview 57

Settings Application Software 58

Device 61

System 72

5.2 SETTINGS APPLICATION SOFTWARE

To configure this device you will need to use the Settings Application Software called EnerVista Configuration Software, which is used for setting up and managing the IED.

Although you can change many settings using the front panel HMI, some of the features cannot be configured without the Settings Application Software; for example the Flexlogic Equation Editor, Modbus User Map, or IEC 61850 communications.

If you do not already have a copy of the Settings Application Software, you can obtain it from GE Vernova at www.gegridsolutions.com.

5.2.1 SETTING ENTRY METHODS

Before placing the IED in operation, settings defining system characteristics, inputs, IED outputs, and protection settings must be entered, using one of the following methods:

- Front panel, using the keypad and the display (used to configure all settings except Flexlogic Equation Editor and IEC61850).
- Front USB port, connected to a portable computer running the EnerVista Configuration software (used to configure all settings including Flexlogic Equation Editor and IEC61850).
- Rear Ethernet (copper or fiber ports connected to portable computer running the EnerVista Configuration software (used to configure all settings including Flexlogic Equation Editor and IEC61850).
- Rear RS485 ports and a SCADA system running user-written software. (used to configure all settings except Flexlogic Equation Editor and IEC61850)

Any of these methods can be used to enter most of the IED settings. A computer, running the EnerVista Configuration software is the preferred settings entry method as it makes entry much easier. Files can be stored and downloaded for fast, error free entry when a computer is used. The IED leaves the factory with settings programmed to default values, and it is these values that are shown in the setting message illustrations.

At a minimum, the ***SETTINGS\SYSTEM*** settings must be entered for the system to function correctly. To safeguard against the installation of a IED whose settings have not been entered, the Out-Of-Service self-test warning is displayed. In addition, the Critical Fail output relay is de-energized and the Healthy LED is OFF (red). Once the IED has been programmed for the intended application, the ***SETTINGS\DEVICE\INSTALLATION\Device In Service*** setting should be changed from 'Not Ready' (default value) to 'Ready' and the Healthy LED will turn ON (green). Before putting the IED in 'Ready' state, each setting should be worked through to ensure that proper device settings have been configured, entering values either by keypad or computer.

5.2.2 COMMON SETTINGS

To make the application of this device as simple as possible, similar methods of operation and similar types of settings are incorporated in various features. Rather than repeat operation descriptions for this class of setting throughout the manual, a general description is presented in this overview. Details that are specific to a particular feature are included in the discussion of the feature. The form and nature of these settings is described below.

Function setting: The ***Function*** setting determines the operational characteristic of each feature. The range for this setting is: 'Disabled', 'Trip', 'Latched Trip', 'Alarm', 'Latched Alarm', and 'Configurable'.

If the ***Function*** setting is selected as 'Disabled', then the feature is not operational.

If the ***Function*** setting is selected as 'Trip' or 'Latched Trip', then the feature is operational. When the 'Trip' or 'Latched Trip' function is selected and the feature operates, the output IED 'Trip' operates, and the LED 'TRIP' is lit. The LED 'TRIP' can be reset by issuing reset command or pressing 'Clear/Reset' key.

If the ***Function*** setting is selected as 'Alarm' or 'Latched Alarm', then the feature is operational. When this function is selected, and the feature operates, the LED 'ALARM' is lit, and any assigned auxiliary output IED operates. The 'Trip' output IED does not operate, and the LED 'TRIP' is not lit.

When ***Alarm*** function is selected and the feature operates, the LED 'ALARM' flashes, and it self-resets when the operating conditions are cleared.

When ***Latched Alarm*** function is selected, and the feature operates, the LED 'ALARM' will flash during the operating condition, and will be steady lit after the conditions are cleared. The LED 'ALARM' can be reset by issuing reset command or pressing the 'Clear/Reset' key.

If the ***Function*** setting is selected as 'Configurable', the feature is fully operational but outputs are not driving any action, such as TRIP IED , Alarm LED or anything else. The User has to program operands from this element to a desirable action which may be the auxiliary output IED from the list of available IEDs in the element itself, Flexlogic, etc.

Note:
The FlexLogic operands generated by the operation of each feature are active, and available to assign to outputs, or use in FlexLogic equations in the Flexlogic Equation Editor, regardless of the selected function, except when the function is set to 'Disabled'.

- ***Current set/Voltage set***: This setting selects the threshold equal to or above (for over elements) or equal to or below (for under elements) which the measured parameter causes an output from the measuring element.
- ***Time Delay***: This setting selects a fixed time interval to delay an input signal from appearing as an output.
- ***tRESET (Dropout delay)***: This setting selects a fixed time interval to delay dropping out the output signal after being generated.
- ***Time Dial/TMS***: This setting provides a selection for Time Dial Multiplier which modifies the operating times per the selected inverse curve. For example, if an IEEE Extremely Inverse curve is selected with TDM=2, and the fault current is 5 times bigger than the PKP level, operation of the element can not occur before an elapsed time of 2.59 s from Pickup.
- ***Relay O/P X***: The ***Relay O/P X*** setting selects the IEDs required to operate when the feature generates an output. The range is any combination of the Auxiliary output IEDs. The letter 'X' denotes the number of auxiliary output IEDs defined for the IEDs Cortec.
- ***Direction***: The ***Direction*** setting is available for overcurrent features which are subject to control from a directional element. The range is 'Non-Directional', 'Forward', and 'Reverse'. If set to 'Non-Directional', the element is allowed to operate for current flow in any direction. There is no supervision from the directional element. If set to 'Forward', the OC element is allowed to operate when the fault is detected by the directional element in forward direction. In this mode, the OC element does not operate for fault in reverse direction. If set to 'Reverse', the OC element is allowed to operate when the fault is detected in reverse direction, and does not operate in forward direction.
- ***Reset Char***: Selection of an Instantaneous DT or a Timed reset (Inverse) is provided by this setting. If Instantaneous reset (DT) is selected, the element resets instantaneously providing the quantity drops below the percentage or absolute value of the PKP (Start) level corresponding to each element before the time for operation is reached. More information on the dropout levels for each element can be found in the Technical Specifications chapter. If Timed reset (Inverse) is selected, the time to reset is calculated based on the reset equation for the selected inverse curve.
- ***Inhibit***: The ***Inhibit*** setting selects an operand from the list of FlexLogic operands, which when active, blocks the feature from running.

5.2.3 SETTINGS TEXT ABBREVIATIONS

The following abbreviations are used in the settings pages.

- A: amperes
- kA: kiloamperes
- V: volts
- kV: kilovolts
- kW: kilowatts

- kvar: kilovars
- kVA: kilo-volt-amperes
- AUX: auxiliary
- COM, Comms: communications
- CT: current transformer
- GND: ground (earth)
- Hz: Hertz
- MAX: maximum
- MIN: minimum
- SEC, s: seconds
- UV: undervoltage
- OV: overvoltage
- VT: voltage transformer
- Ctrl: control
- Hr & hr: hour
- O/L: overload
- CT1 IN2: EF2 Derived Current
- CT1 IN1: EF1 Measured Current
- ISEF: Sensitive Earth Fault Current or SEF Current
- PTP: Precision Time Protocol
- PRP: Parallel Redundancy Protocol
- HSR: High-availability Seamless Redundancy
- LLA: Link Loss Alert functionality

5.3 DEVICE

The following diagram is an example of the Device settings display navigation, so it may not apply in its entirety to all IEDs. The actual display options available are dependent on the exact IED Cortec selection.

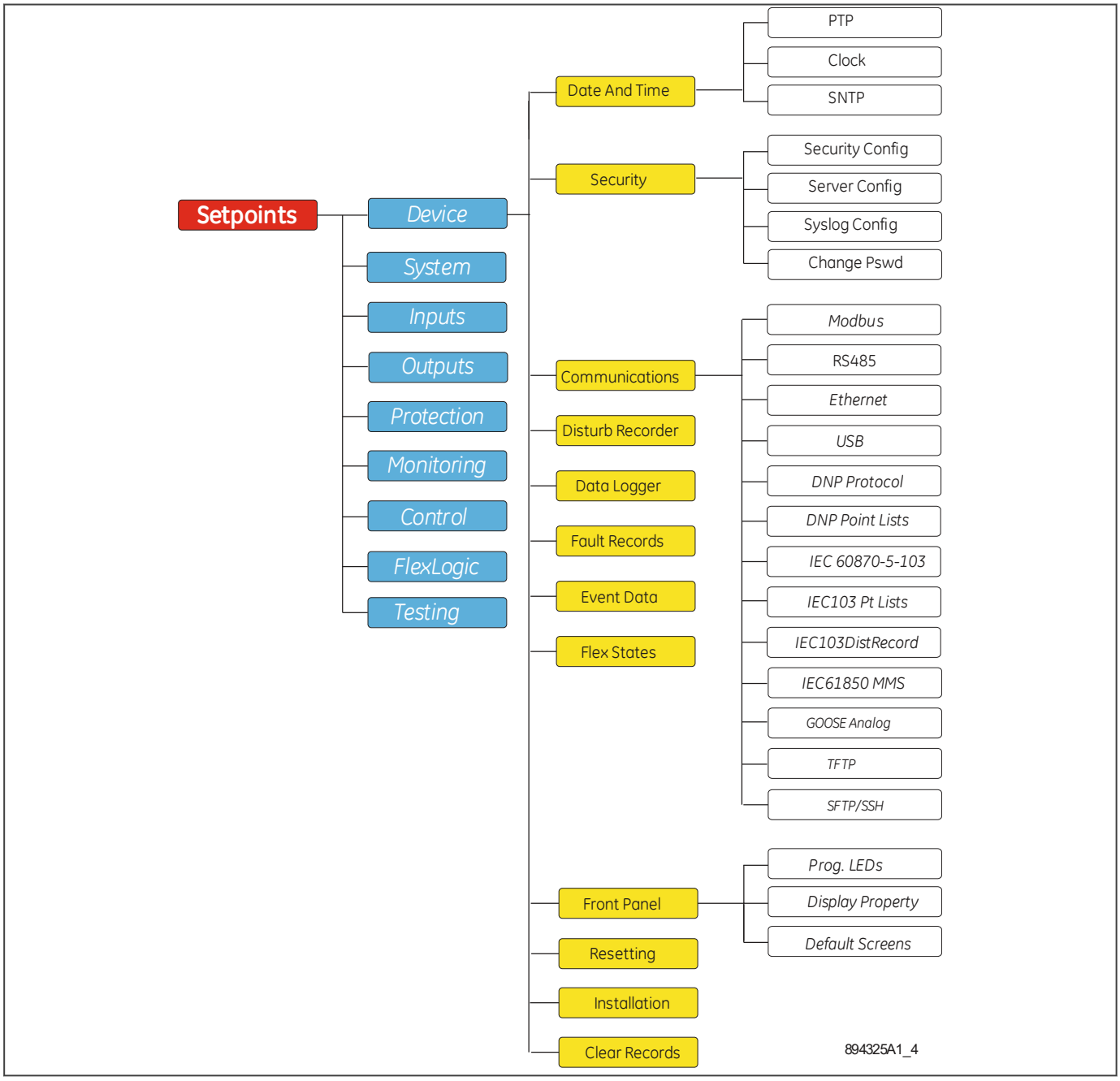

Figure 15: Device menu hierarchy

5.3.1 DATE AND TIME CONFIGURATION

The date and time setting will normally be updated automatically by the chosen UTC (Universal Time Co-ordination) time synchronisation mechanism when the device is in service. You can also set the date and time manually using the ***Clock*** setting under the path ***SETPOINTS\DEVICE\DATE AND TIME***.

5.3.1.1 CLOCK

The Multilin Agile IED is capable of receiving a time reference from several time sources in addition to its own internal clock for the purpose of time-stamping events, disturbance records and other occurrences within the IED. The accuracy of the time stamp is based on the time reference that is used. The Multilin Agile IED supports an internal clock, SNTP, IRIG-B and PTP IEEE 1588, as potential time references.

If two or more time sources are available, the time source with the higher priority shown in Time Sources table is used where 1 is considered to be the highest priority.

> *Note:*
> *The time source priority of PTP and IRIG-B can be swapped. If both PTP and IRIG-B are available to the Multilin Agile IED, by default the Multilin Agile IED clock syncs to PTP over IRIG-B. If PTP is not available, the IED syncs the internal clock to IRIG-B.*

The following table shows the priority of each time source.

Time Source	Priority
PTP (IEEE1588)	1*
IRIG-B	2*
SNTP	3
Internal Clock	4

*The priority of IRIG-B and PTP can be swapped in ***SETTINGS\ DEVICE\ DATE AND TIME\ CLOCK\ SYNC SRC PRIO***. path by selecting either `PTP`/`IRIG B`/`OTHER` setting value.

Path: ***SETTINGS\DEVICE\DATE AND TIME\CLOCK***

In the clock settings the date and time can be set manually or sync the IED to computer clock.

The System Clock (device date and time) and RTC Sync Source (Type of synchronization in place) are available at ***DEVICE STATUS\ CLOCK*** path

> *Note:*
> *Synchronisation via communication protocols, IEC 60870-5-103, DNP3 Serial and DNP3oE, Modbus RTU and Modbus TCP, etc will not be accepted if the sync source is from IRIG-B, SNTP or PTP.*

5.3.1.2 PTP PROTOCOL

The IED implements PTP functionality on each of its Ethernet ports independently, and automatically selects the port with the best time using the Best Master Clock Algorithm. Depending on the Cortec selection the device will have just one Ethernet port (ETHT1) or three (ETH1 and ETH2, ETH3 for redundancy).

The PTP settings are placed under the path: ***SETPOINT\ DEVICE\ DATE AND TIME\ PTP***.

The PTP status can be viewed in the at ***DEVICE STATUS\ PTP***

5.3.1.3 IRIG-B

All models have the option of accepting a demodulated IRIG-B input through the rear serial port 1 (COM1)

To set the device to use IRIG-B, Set the IRIG-B setting under path, ***SETPOINT\ DEVICE\ DATE AND TIME*** to `Enabled`.

For more information, refer to Demodulated IRIG-B sub-chapter under Time Synchronisation in Communications chapter.

5.3.1.4 SNTP PROTOCOL

SNTP is used to synchronise the clocks of computer systems over packet-switched, variable-latency data networks, such as IP.

The device is synchronised by the main SNTP server. This is achieved by entering the IP address of the SNTP server into the IED.

SNTP settings are found under the path: ***SETPOINTS\DEVICE\DATE AND TIME\SNTP***.

For more information, refer to SNTP sub-chapter under Time Synchronisation in Communications chapter.

5.3.2 SECURITY

The following security features are available:

- Basic Security – The basic security feature present in the default offering of the product.
- Advanced Cyber-security – The feature refers to the advanced security options available as a software option. When this option is purchased, it is automatically enabled and Basic Security is disabled.

Basic and Advanced Cyber-Security settings are found under the path: ***SETPOINTS\DEVICE\SECURITY***.

For more information, refer to the Cyber-Security chapter.

5.3.3 COMMUNICATIONS

This product supports Substation Automation System (SAS), and Supervisory Control and Data Acquisition (SCADA) communication.

Communication settings are found under the path: ***SETPOINTS\DEVICE\COMMUNICATIONS***.

Refer to the Communications chapter for more information.

5.3.4 DISTURBANCE RECORDER

The disturbance recorder feature allows to record the waveform capture of the calibrated analogue channels, together with selected values for the configurable digital and analogue channels available in the device. The disturbance recorder allows the user to configure up to 64 digital channels (up to 64) and up to 16 analogue channels.

The Disturbance Recorder settings are found under the path: ***SETPOINTS\DEVICE\DISTURB RECORDER***.

For more information, refer to the Monitoring and Control chapter.

5.3.5 DATA LOGGER

The data logger samples and records up to 16 analogue parameters at rate defined by the user. All data is stored in non-volatile memory, where the information will be retained upon relay control power lost.

The data logger can be configured with a few channels over a long period of time, or with larger number of channels for a shorter period of time. The IED automatically partitions the available memory between the channels in use.

The selection of the rate for logging data also affects the duration of recorded data. The data logger will have longer duration for sampling rates at longer periods of time (e.g. '1 minute', '30 minutes', '1 hour', etc.), as compared to sampling rates at short periods (e.g. '1 cycle', or '1 second', etc.).

The recorded data can be downloaded to EnerVista Configuration software and displayed.

The data logger settings are found under the path: ***SETPOINTS\DEVICE\DATA LOGGER***.

For more information, refer to the Monitoring and Control chapter.

5.3.6 FAULT RECORDS

The Multilin Agile IED supports up to 25 fault reports and an associated fault locator before overwriting the oldest one. The trigger conditions and the characteristics of the feeder, as well as the analog quantities to be stored, are configured in this setting menu.

When enabled, this function monitors the pre-fault trigger. The pre-fault data are stored in the memory for prospective creation of the fault report on the rising edge of the pre-fault trigger. The element waits for the fault trigger as long as the pre-fault trigger is asserted, but not shorter than 1 second. When the fault trigger occurs, the fault data is stored, and the complete report is created. If the fault trigger does not occur within 1 second after the pre-fault trigger drops out, the element resets and no record is created.

The user programmable fault report contains a header with the following information:

- IED model
- Device name
- Firmware revision
- Date and time of trigger
- Name of pre-fault trigger operand
- Name of Fault trigger operand
- Active setting group at the time of pre-fault trigger
- Active setting group at the time of fault trigger

The fault report continues with the following information:

- All current and voltage phasors (four cycles after the fault trigger)
- Pre-fault values for all programmed analogue channels (one cycle before pre-fault trigger)
- Fault values of all programmed analogue channels (one cycle after the fault trigger)

Each Fault Report is created as a text file with flt extension that can be visualized and shared using the EnerVista Configuration software. The file name is numbered with sequential numbers showing which one is older than the other.

The captured data also includes the type of fault and the distance to the fault location, as well as the autoreclose shot number (when applicable).

The Fault Records settings are found under the path: ***SETPOINTS\DEVICE\FAULT RECORD***S.

For more information, refer to the Monitoring and Control chapter.

5.3.7 EVENT DATA

The Event Data feature stores 64 configurable analogue values each time an event occurs. The IED is able to capture a maximum of 2048 Event records. The Event Data behaviour matches that of the Event Recorder.

There is no Enabling/Disabling of the feature. It is always ‘ON’.

When changes are made to the Event Data settings, the Event data is cleared and the Snapshot.txt file where the Event Data is stored internally in the IED is deleted. The Event Record remains as it is and is not cleared.

The data logger settings are found under the path: ***SETPOINTS\DEVICE\EVENT DATA***.

For more information, refer to the Monitoring and Control chapter.

5.3.8 FLEX STATES

The Flex State feature provides a mechanism where any of 256 selected FlexLogic operand states or any inputs can be used for efficient monitoring.

The feature allows user-customised access to the FlexLogic operand states in the IED. The state bits are packed so that 16 states may be read out in a single Modbus register. The state bits can be configured so that all of the states which are of interest are available in a minimum number of Modbus registers.

There are 256 Flex State bits available. The status value indicates the state of the given Flex State bit.

The Flex States settings are found under the path: ***SETPOINTS\DEVICE\FLEX STATES.***

For more information, refer to the Monitoring and Control chapter.

5.3.9 FRONT PANEL

5.3.9.1 DISPLAY PROPERTIES

The available language options in the IED include English (UK), English (US), Spanish, Russian and Turkish.

The ***Display Property*** setting in which the language can be selected is found under the path: ***SETPOINTS\DEVICE \FRONT PANEL\DISPLAY PROPERTY***.

5.3.9.2 DEFAULT SCREENS

The default display screens show the measurement values. The sequence of displaying the screens starts after a time of inactivity, when no key has been pressed. The displaying sequence goes as follows:

First screen: System Currents, Voltages, Frequency, DC supply voltage.

Second screen: System Power Measurements and Power Factor.

Third screen: System Current & Voltage Negative, Positive and Zero sequence values.

Fourth screen: System Total Harmonic Distorsion.

All default screens show Date & Time data.

The measurement values shown in the default display screens and its configuration are fixed by default. The display time for the default screens is configurable.

The Display Time setting can be found under the path: ***SETPOINTS\DEVICE\FRONT PANEL\DEFAULT SCREENS***.

5.3.10 RESETTING

Some events can be programmed to latch the front panel LEDs. Depending on the application some auxiliary relay outputs can be programmed to latch after the triggering event is cleared. Once set, the latching mechanism holds all the latched indicators, messages, and auxiliary relay outputs in the set state, after the initiating condition has cleared, until a ***RESET*** command is received to return these latches (except the FlexLogic NV latches) to the reset state.

The ***RESET*** command can be initiated by pressing the Cancel key for a few seconds, or by a configurable operand or by a remote device via a communication channel.

The Reset Input X setting (Being X from 1 to 3) under the path: ***SETPOINTS\DEVICE\RESETTING***, allows to selects an operand from the list of Flexlogic operands in the IED.

The targets, LEDs, and latched relay outputs will reset, upon assertion from any of the operand selected as Reset Inputs.

5.3.11 INSTALLATION

The Installation settings allow the user to:

Set the Device Name assigning an alphanumeric name to the device up to 13 alphanumeric characters.

Put the device in service or out of service. The relay is defaulted to the 'Not Ready' state when it leaves the factory. This safeguards against the installation of an IED whose settings have not been entered. The IED in the 'Not Ready' state blocks signaling of any relay output. These conditions remain until the IED is explicitly put in the 'Ready' state. When the IED is in 'Not Ready' state, the Out of Service LED is ON and the Healthy LED is OFF

Establish the Service Command for the IED.

Select the engineering units of temperature display to Celsius or Fahrenheit

Set the current and voltages cutoff levels.

The Installation settings can be found under the path: ***SETPOINTS\DEVICE\INSTALLATION***.

> *Note:*
> *Lower the Voltage Cutoff and Current Cutoff levels with care as the IED will accept lower signals as valid measurements. The default IED cuttoff settings are '0.020 pu' for current and '1.0 V' for voltage.'*

5.3.12 CLEAR RECORDS

The Clear Records commands are accessible from the front panel and from the EnerVista Configuration software.

The Clear Records commands available in the IED are: All Records, Event Records, Disturb Recorder, Data Logger, Fault Records, Max Cur Demand, Max P Demand, Max Q Demand, Energy Use Data, Reset Thermal, Digital Counters, CB1 Arc Current, CB1 Health Data, Security Records, Autoreclose, Last Trip Data, Pwr Quality Data, Volt Interruption.

Each record clear command operand can be set under the path: ***SETPOINTS\DEVICE\CLEAR RECORDS***.

Each record can be cleared either by assigning 'On' or a FlexLogic operand to the appropriate setting.

> *Note:*
> *The Clear Records commands are also available from the front panel under the path: **RECORDS\CLEAR RECORDS** and from the Enervista Configuration software under the path: **MONITORING\CLEAR RECORDS**, however there the allowable settings are only 'ON' and 'OFF'. (FlexLogic operands cannot be used.)*

5.3.13 USING THE HMI PANEL

Using the HMI, you can:

- Display and modify settings
- View the digital I/O signal status
- Display measurements
- Display fault records
- Reset fault and alarm indications

The keypad provides full access to the device functionality using a range of menu options. The information is displayed on the LCD.

Keys	Description	Function
	Up and down cursor keys	To change the menu level or change between settings in a particular setting level, or changing values within a setting

Keys	Description	Function
	Left and right cursor keys	To navigate between default displays, and in the event of a text length longer than 16 characters, this keys can be used to display the whole text
	ENTER key	For accepting setting values changes
	Hotkeys	Shortcuts for executing Reset command and enter CB Control menu. Also, for confirming or not confirming changes when navigating through settings
	Clear key	To return to a higher level menu header from any lower level menu. To clear the insertion whilst inputting a setting. To ask for settings confirmation when changing a setting
	Read key	To read alarm messages and enter Last Trip data menu

Note:
As the LCD display has a resolution of 16 characters by 3 lines, some of the information is in a condensed mnemonic form.

5.3.13.1 NAVIGATING THE HMI PANEL

The cursor keys are used to navigate the menus. These keys have an auto-repeat function if held down continuously. This can be used to speed up the setting value changes and menu navigation. The longer the key is held pressed, the faster the rate of change or movement.

The navigation map below shows how to navigate the menu items.

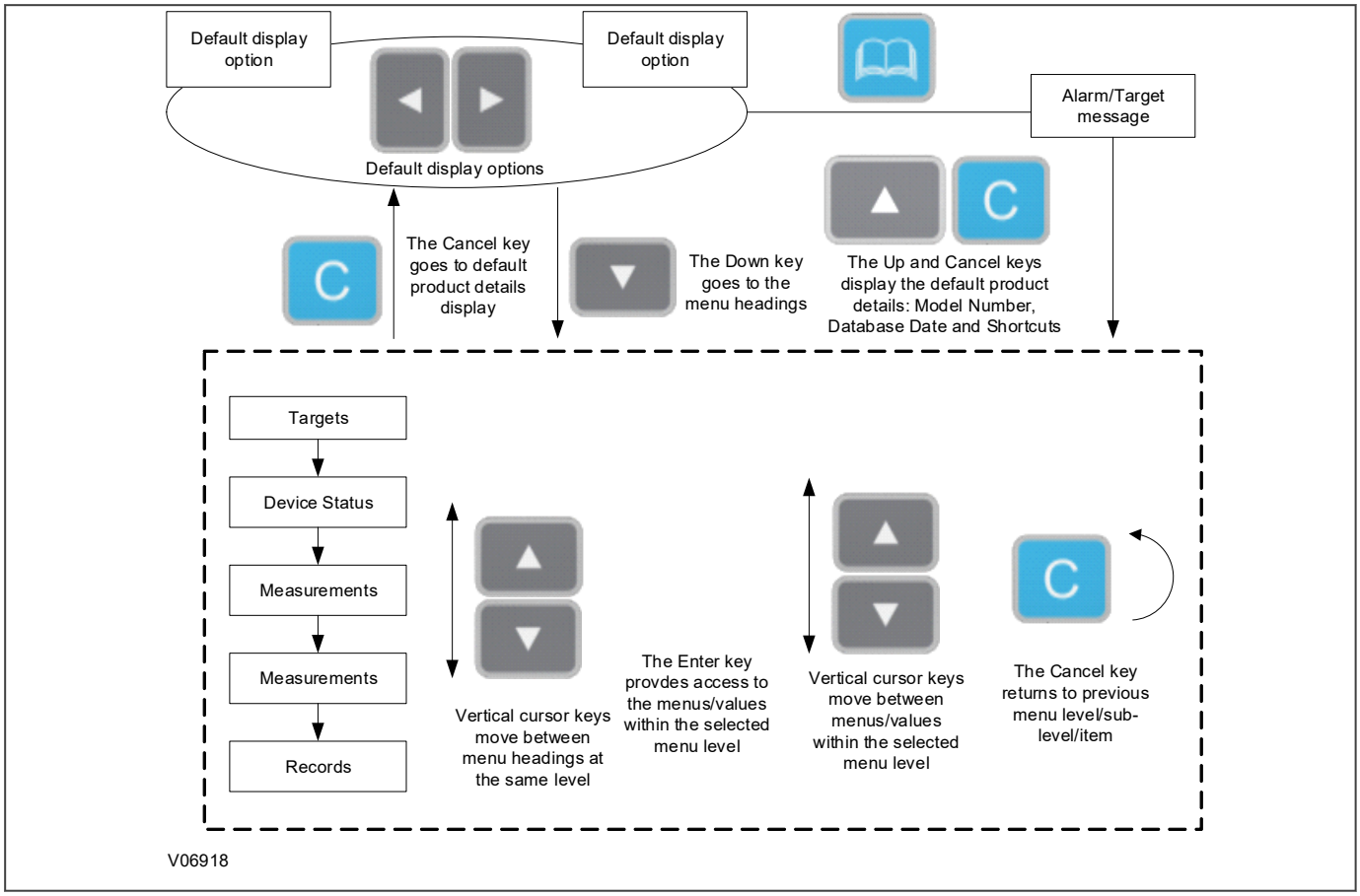

Figure 16: Navigating the HMI

5.3.13.2 GETTING STARTED

When the IED first starts, it will go through its power up procedure. After a few seconds it will settle down into the default display menu.

Even though the device itself should be in full working order when it first starts, an alarm could still be present, for example, if there is no network connection for a device that has the Ethernet port physically connected with a copper cable. If this is the case, the orange Alarms LED will be flashing and the alarm can be read by pressing the 'Read' key.

```
TARGETS
Link Error Prim
```

If this is the case, the IED will be need to be connected to an active Ethernet network to clear the alarm.

If there are other alarms present, these must also be cleared to set the Alarm LED OFF.

5.3.13.3 DEFAULT DISPLAY

The HMI display provides Date, Time and Measurements for the system voltages, currents, power, and frequency, depending on the device model.

Date and time, and Metering values

For example (P14D):

```
Ia 0.0 A Va 0.0 V
Ib 0.0 A Vb 0.0 V
Ic 0.0 A Vc 0.0 V
```

```
In 0.0 A Vn 0.0 V
f 0.00 Hz DC 0.0 V
```

5.3.13.4 DEFAULT DISPLAY NAVIGATION

The following diagram is an example of the default display navigation. This is an example only and may not apply in its entirety to all models. The actual display options available depend on the exact model.

Use the horizontal cursor keys to step through from one display to the next.

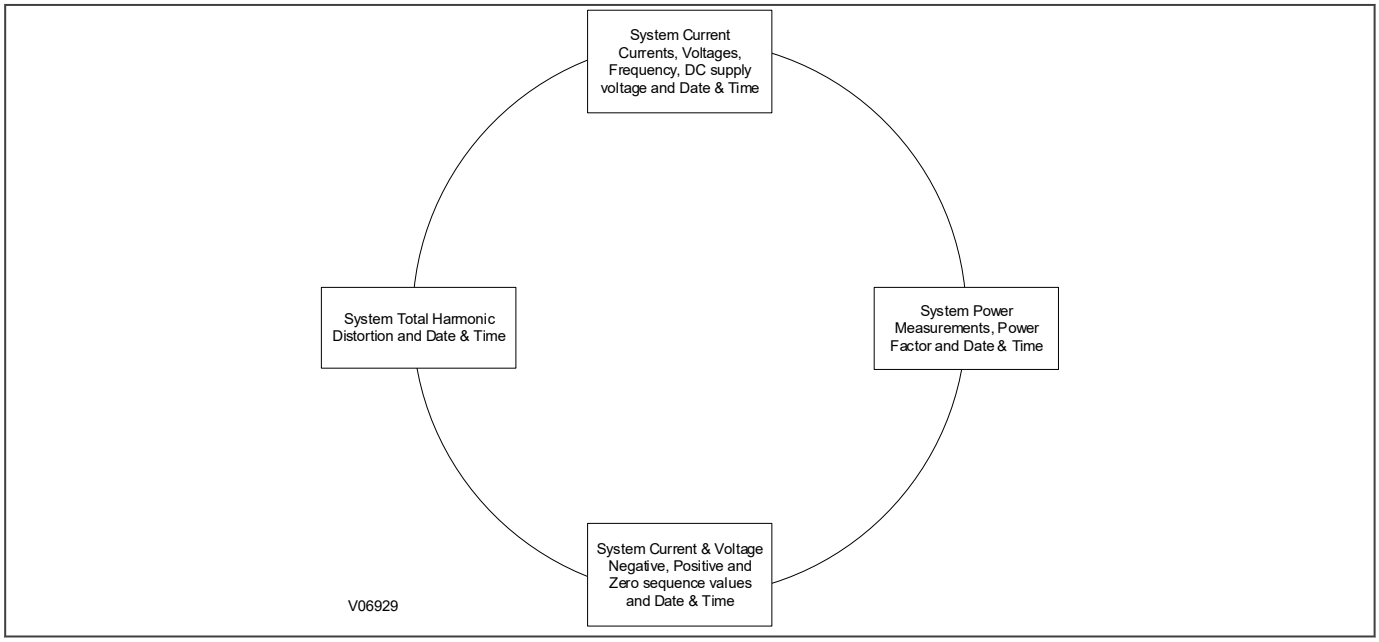

Figure 17: Default display navigation

5.3.13.5 PASSWORD ENTRY AND ROLE BASED ACCESS CONTROL (RBAC)

5.3.13.6 PASSWORD ENTRY AND ROLE BASED ACCESS CONTROL (RBAC)

Role Based Access Control (RBAC)

Role based access control, RBAC, is the core of session management. Every login attempt will connect to the RBAC service and it will allow or deny the login of the user.

In IEDs with Basic Cyber-Security (default option), the default connection is done as Viewer, without any password requirement. Basic Cyber-Security IEDs support 4 fixed roles: Administrator, Engineer, Operator and Viewer. Administrator, Engineer and Operator are password protected roles. The default password for those roles is 0.

In IEDs with Advanced Cyber-Security (see ordering options for more detail), a username and password always will be required. If the login is successful, the access level will correspond to the role defined to this user.

The maximum number of concurrent sessions is only one for all roles, except of Viewer role, which has the limit of 5 sessions.

Only Administrator can change other user's passwords. All IED users can change their own passwords. For password reset/recovery procedure the Administrator role will be required.

There is a session timeout adjustable by settings. This timeout means that open sessions are automatically closed if they remain inactive till the timer elapses. This inactivity timer defines the period that IED waits in idleness before a logged in user will be automatically logged out. This timeout is different for HMI interface and other interfaces (serial, Ethernet, etc.).

For more detailed information regarding Basic and Advanced Cyber-Security Implementation (Cortec dependent), please refer to the Cyber-Security chapter.

Password entry

When configuring the default display or any other settings modification, the user will be prompted for a Role and a password before any changes can be made in the IED. The default Viewer Role is not password protected (select Viewer as role and press Enter), Viewer role just allows settings visualisation. For any other role a password will be required as follows.

```
LOGIN
Role:
Admoinistrator
```

```
LOGIN
Password
A*****************
```

1. Select the Role in the Role login screen using the up or down cursor keys and press Enter key to confirm it.
2. A Password screen will be prompted, a fix cursor shows which character field of the password can be changed. Press the up or down cursor keys to change each character.
3. Use the left and right cursor keys to move between the character fields of the password.
4. Press the **Enter** key to confirm the password. If you enter an incorrect password, an invalid password message followed by an ***AUTH FAILED*** message is displayed. The display then reverts to ***PASSWORD***. On entering a valid password, if this Role is sufficient to edit the selected setting, the display returns to the setting screen to allow the edit to continue. If the correct level of password has not been entered, the password prompt screen appears again.
5. To escape from this password prompt, press the **Clear** key. If the keypad is inactive for a number of minutes, the password protection of the front panel user interface reverts to the default access level.

5.3.13.7 PROCESSING ALARMS AND RECORDS

If there are any alarm messages, they will appear on the Target Messages display and the orange alarm LED will flash. The alarm messages can either be self-resetting or latched. If they are latched, they must be cleared manually.

1. To view the alarm messages, press the **Read** key.
2. Scroll through the pages of the latest fault record, using the cursor keys.

5.3.13.8 MENU STRUCTURE

IED display messages are organized into a main menu, menus and different levels of sub-menus.. The five main menu headers are Targets, Device Status, Measurements, Settings and Records.

Pressing the **Down** key scrolls through the Main Menu.

Pressing the **Enter** key from the main menu headers displays the corresponding menus. Use the **Up** and **Down** keys to scroll through the available menus and sub-menus.

5.3.13.9 CHANGING THE SETTINGS

Starting at the default display, press the **Down** cursor key to show the Setpoint heading.

1. Use the **Enter** key to access to the settings menus and sub-menus.
2. Use the **Up** and **Down** keys to scroll through the available menus and press the **Enter** key to select the menu required. Repeat this sequence to access to the subsequent sub-menus.
3. To return to the previous menu level press the **Clear** key.
4. To return to the default display, press the **Clear** key repeatedly from any of the menus and sub-menus.
5. To change the value of a setting, go to the relevant Setting in the menu, then press the **Enter** key to change the setting value. A marking cursor on the LCD shows that the value can be changed. You may be prompted for a password first.
6. To change the setting value, use the **Up** and **Down** keys to select the required value to be changed.
7. Press the **Enter** key to confirm the new setting value or the **Clear** key to discard it. The new setting is automatically discarded if it is not confirmed within 15 seconds.
8. The changes must be confirmed before they are used. When all required changes have been entered, press the **Clear** key. Before returning to the previous menu level, the following prompt appears.

```
CONFIRM CHANGES?
NO YES
```

9. Press the relevant hotkey to accept or discard the new settings.

5.4 SYSTEM

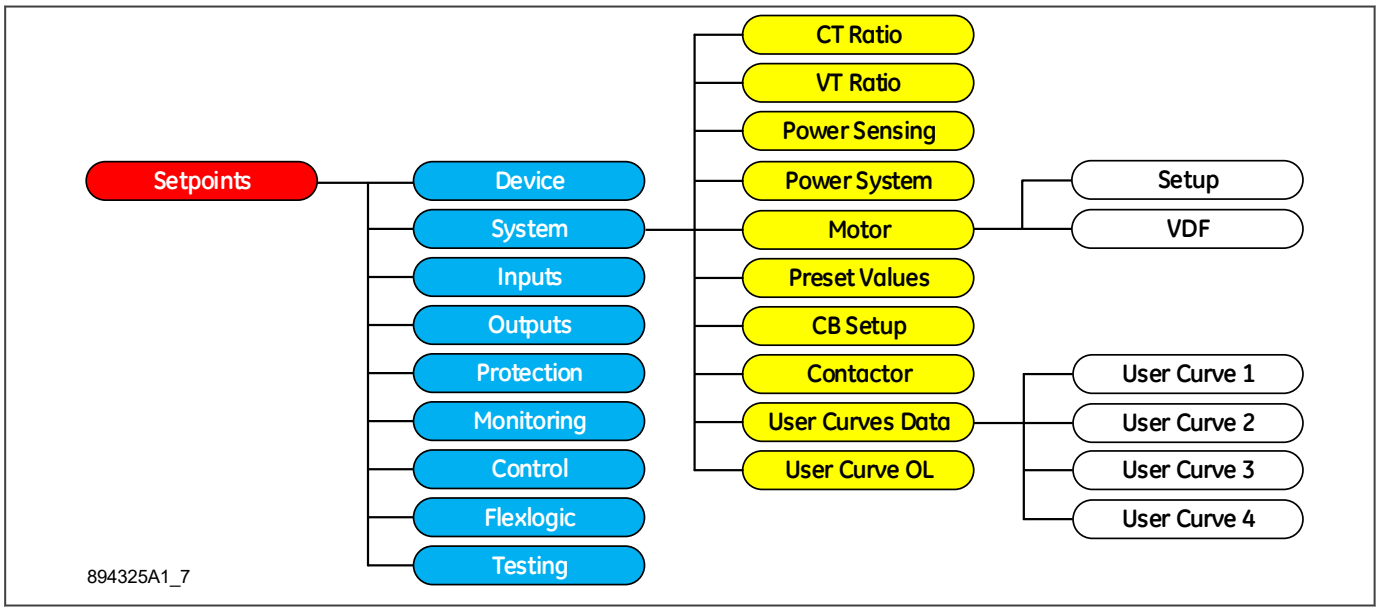

Figure 18: System menu hierarchy

5.4.1 CT RATIO

The CT RATIO menu provides the setup menu for the Current Transformers (CTs) connected to the Multilin Agile IED terminals. The setup of the three-phase CTs, the Earth CT, and the Sensitive Earth CT requires a selection of primary and secondary CT ratings.

The Multilin Agile IED has three inputs for phase currents A, B, and C, and one input for earth/residual current.

For PHASE CT PRIMARY settings, enter the primary rating of the three-phase feeder CTs wired to the IED phase CT terminals. With the phase CTs connected in wye (star), the calculated phasor sum of the three phase currents (Ia + Ib + Ic = Neutral Current = 3I0) is used as the input for the neutral.

For PHASE CT SEC'y, the EARTH CT PRIMARY and SEC'Y settings are displayed only if the Earth input is installed.

The SENSITIVE EARTH CT PRIMARY and SEC'Y settings are displayed only if the Sensitive Earth input is installed.

For both cases, and depending on the Earth or Sensitive Earth input selected, enter the primary rating of the Earth / Sensitive Earth CT wired to the relay Earth / Sensitive Earth CT terminals. When the Earth input is used for measuring the residual 3I0 current, the primary current must be the same as the one selected for the phase CTs.

The CT Ratio settings can be found under the path: ***SETPOINTS\SYSTEM\CT RATIO\CT RATIO***.

For more information regarding ranges and default values, refer to the Settings and Signal appendix.

> *Note:*
> *CT Ratio functionality is only available for products with CT inputs (P14D and P14N).*

5.4.2 VT RATIO

The VT RATIO menu provides the setup for all VTs (PTs) connected to the IED voltage terminals

> *Note:*
> *The nominal **MAIN VT SEC'Y** and the **4TH VT SEC'Y** voltage settings are the voltages across the phase VT terminals and the auxiliary VT terminals correspondingly when nominal voltage is applied.*

For example, on a system of 13.8kV nominal primary voltage, and a 14400:120 volt VT in a Delta connection, the secondary voltage would be 115V, i.e. (13800/14400)*120. For a Wye connection, the voltage value entered must be the phase to neutral voltage which would be 115/√3 = 66.4 V.

On a 14.4 kV system with a Delta connection and a VT primary to secondary turns ratio of 14400:120, the voltage value entered would be 120 V, i.e. 14400/120.

The VT Ratio settings can be found under the path: ***SETPOINTS\SYSTEM\VT RATIO\VT RATIO***.

For more information regarding ranges and default values, refer to the Settings and Signal appendix .

PH VT INPUT Selects the type of phase VT connection to match the VTs (PTs) connected to the IED.

MAIN VT PRIMARY Selects the phase VT ratio to match the ratio of the VTs connected to the VT bank.

MAIN VT SEC'Y Selects the output secondary voltage for phase VTs connected to the VT bank.

4th VT INPUT Selects the voltage type corresponding to the one applied to the Aux VT IED terminals from VT Bank. Select Vn (neutral voltage), if the neutral voltage is applied to the IED auxiliary VT.

4th VT PRIMARY Selects the phase VT ratio to match the ratio of the VT connected to the aux VT input from VT bank.

4TH VT SEC'Y Selects the output secondary voltage of the aux. VT connected to the aux. VT input from VT bank.

> *Note:*
> *VT Ratio functionality is only available for products with VT inputs (P14D and P94V).*

5.4.3 POWER SENSING

The power computation in the Multilin Agile IED is performed using the voltage and current inputs from the PH VT1 BANK-A and CT1 BANK-B. In cases when the connected VTs and CTs have opposite polarity, the power sensing menu allows for inverting the power measurement.

The Power Sensing settings can be found under the path: ***SETPOINTS\SYSTEM\POWER SENSING***.

For more information regarding ranges and default values, refer to the Settings and Signal Appendix B.

PHASE CT&VT POLARITY Selects the polarity of phase VT connection and Phase CT connection connected to the IED, Same or Reverse. When Reverse is selected, this setpoint inverts (multiplies phase currents by "-1") the CT polarity for the phase currents from CT1 BANK-B, with respect to the phase voltages from the PH VT1 BANK-A.

> *Note:*
> *The setpoint for inversion of the power metering will be useful to avoid the physical inversion of the CT connections on the relay. As the power metering will affect the power directional elements, the user must determine the correct forward and reverse direction of the power before setup.*

RESET EVENT ENERGY Selects the Flexlogic operand to log, and resets to Zero all energy metering values.

At the rising edge of the FlexLogic operand selected under ***RESET EVENT ENERGY*** setpoint, all energy metering values under ***MEASUREMENTS\ENERGY 1\ENERGY***, are logged and reset to zero, and `RST ENERGY D/T` is recorded and displayed.

The logged values are displayed as the `LAST EVENT (+/-) WHR` and `LAST EVENT (+/-) VARHR` under ***MEASUREMENTS\ENERGY 1\ENERGY LOG***. Today and yesterday energy events are also provided.

An application example could be monitoring of the total energy accumulated at the end of an event or a shift interval. An event/shift interval can be defined, e.g. per the breaker status operand (open or closed).

5.4.4 POWER SYSTEM

The ***NOM. FREQUENCY*** setting is used as a default to set the digital sampling rate if the system frequency cannot be measured from available AC signals. This may happen if the signals selected for frequency tracking are not present, or a valid frequency is not detected. Before reverting to the nominal frequency, the frequency tracking algorithm holds the last valid frequency measurement for a safe period of time while waiting for the signals to reappear or for the distortions to decay.

The selection of the ***PHASE SEQUENCE*** setting shall match the power system phase rotation. This setting is required to properly calculate sequence components and power parameters. Note that this setting informs the IED of the actual system phase sequence, either ABC or ACB. CT and VT inputs on the IED corresponding to a, b, and c, must be connected to system phases A, B, and C for correct operation.

The Power System settings can be found under the path: ***SETPOINTS\SYSTEM\POWER SYSTEM***. For more information regarding ranges and default values, refer to the Settings and Signal appendix.

5.4.5 CB SETUP

Breaker detection is performed on the IED by monitoring the state/states of either one, or preferably two, contact inputs. It is highly recommended to monitor the status of the feeder breaker using both breaker auxiliary contacts 52a, and 52b. However using only one of them is also acceptable.

CB STATUS INPUT setting selects the CB input configuration with one contact(52a or 52b) or two contacts (Both 52a and 52b).

CB AUX 3PH (52A) and CB AUX 3PH (52B) settings select the Input connected to the breaker auxiliary contacts 52a and 52b.

The Breaker settings can be found under the path: ***SETPOINTS\SYSTEM\CB SETUP\BREAKER***.

For more information regarding ranges and default values, refer to the Settings and Signal appendix.

5.4.6 USER CURVES

The IED incorporates four programmable User Curves: User Curve 1, 2, 3 and 4. The points for these curves are defined in the EnerVista Configuration software. User-defined curves can be used for Time Overcurrent protection in the same way as IEEE, IAC, ANSI, and IEC curves. Each of the four User Curves (1, 2, 3 and 4) has 120-point settings for entering times to reset and operate, 40 points for reset (from 0 to 0.98 times the Pickup value) and 80 for operate (from 1.03 to 20 times the Pickup). The data is converted into two continuous curves by linear interpolation between data points.

The User Curves Data settings for each User Curve can be found under the path: ***SETPOINTS\SYSTEM\USER CURVES DATA\USER CURVE X***, where X is 1 to 4.

For more information regarding ranges and default values, refer to the Settings and Signal appendix.

Note:
Use the EnerVista Configuration software to select, design or modify any of the User Curves' data.

CHAPTER 6

CURRENT PROTECTION FUNCTIONS

6.1 CHAPTER OVERVIEW

The P14D and P14N provide a wide range of current protection functions. This chapter describes the operation of these functions including the principles, logic diagrams and applications.

This chapter contains the following sections:

Chapter Overview 76
Overcurrent Protection Principles 77
Phase Overcurrent Protection 88
Voltage Dependent Overcurrent Element 96
Negative Sequence Overcurrent Protection 100
Sensitive Earth Fault Protection 106
Cold Load Pickup 114
Thermal Overload Protection 117
Broken Conductor Protection 122
Blocked Overcurrent Protection 124
SOTF Protection 126
Undercurrent Protection 127
Load Blinder 128

Note:
For any protection element setting set below 0.02xCT value, the Current Cutoff setting under the ***DEVICE\INSTALLATION*** *path must be taken into account and set accordingly, as the default value is 0.020.*

6.2 OVERCURRENT PROTECTION PRINCIPLES

Most electrical power system faults result in an overcurrent of one kind or another. It is the job of protection devices, formerly known as 'relays' but now known as Intelligent Electronic Devices (IEDs) to protect the power system from faults. The general principle is to isolate the faults as quickly as possible to limit the danger and prevent fault currents flowing through systems, which can cause severe damage to equipment and systems. At the same time, we wish to switch off only the parts of the power grid that are absolutely necessary, to prevent unnecessary blackouts. The protection devices that control the tripping of the power grid's circuit breakers are highly sophisticated electronic units, providing an array of functionality to cover the different fault scenarios for a multitude of applications.

The described products offer a range of overcurrent protection functions including:

- Phase Overcurrent protection
- Earth Fault Overcurrent protection
- Negative Sequence Overcurrent protection
- Sensitive Earth Fault protection

To ensure that only the necessary circuit breakers are tripped and that these are tripped with the smallest possible delay, the IEDs in the protection scheme need to co-ordinate with each other. Various methods are available to achieve correct co-ordination between IEDs in a system. These are:

- By means of time alone
- By means of current alone
- By means of a combination of both time and current.

Grading by means of current alone is only possible where there is an appreciable difference in fault level between the two locations where the devices are situated. Grading by time is used by some utilities but can often lead to excessive fault clearance times at or near source substations where the fault level is highest.

For these reasons the most commonly applied characteristic in co-ordinating overcurrent devices is the IDMT (Inverse Definite Minimum Time) type.

6.2.1 IDMT CHARACTERISTICS

There are two basic requirements to consider when designing protection schemes:

- All faults should be cleared as quickly as possible to minimise damage to equipment
- Fault clearance should result in minimum disruption to the electrical power grid.

The second requirement means that the protection scheme should be designed such that only the circuit breaker(s) in the protection zone where the fault occurs, should trip.

These two criteria are actually in conflict with one another, because to satisfy (1), we increase the risk of shutting off healthy parts of the grid, and to satisfy (2) we purposely introduce time delays, which increase the amount of time a fault current will flow. With IDMT protection applied to radial feeders, this problem is exacerbated by the nature of faults in that the protection devices nearest the source, where the fault currents are largest, actually need the longest time delay.

IDMT characteristics are described by operating curves. Traditionally, these were defined by the performance of electromechanical relays. In numerical protection, equations are used to replicate these characteristics so that they can be used to grade with older equipment.

The old electromechanical relays countered this problem somewhat due to their natural operate time v. fault current characteristic, whereby the higher the fault current, the quicker the operate time. The characteristic typical of these electromechanical relays is called Inverse Definite Minimum Time or IDMT for short.

6.2.1.1 IEC 60255 IDMT CURVES

There are seven well-known variants of this characteristic:

- Standard Inverse
- Very Inverse
- Extremely Inverse
- UK Long Time Inverse
- Rectifier
- FR Short Time Inverse
- Standard Inverse (1.3s)

These equations and corresponding curves governing these characteristics are very well known in the power industry.

Standard Inverse

This characteristic is commonly known as the 3/10 characteristic, i.e. at ten times setting current and TMS of 1, the IED will operate in 3 seconds.

The characteristic curve can be defined by the mathematical expression:

$$t_{op} = T \frac{0.14}{\left(\frac{I}{I_s}\right)^{0.02} - 1}$$

The standard inverse time characteristic is widely applied at all system voltages – as back up protection on EHV systems and as the main protection on HV and MV distribution systems.

In general, the standard inverse characteristics are used when:

- There are no co-ordination requirements with other types of protective equipment further out on the system, e.g. Fuses, thermal characteristics of transformers, motors etc.
- The fault levels at the near and far ends of the system do not vary significantly.
- There is minimal inrush on cold load pick up. Cold load inrush is that current which occurs when a feeder is energised after a prolonged outage. In general the IED cannot be set above this value but the current should decrease below the IED setting before the IED operates.

Very Inverse

This type of characteristic is normally used to obtain greater time selectivity when the limiting overall time factor is very low, and the fault current at any point does not vary too widely with system conditions. It is particularly suitable, if there is a substantial reduction of fault current as the distance from the power source increases. The steeper inverse curve gives longer time grading intervals. Its operating time is approximately doubled for a reduction in setting from 7 to 4 times the IED current setting. This permits the same time multiplier setting for several IEDs in series.

The characteristic curve can be defined by the mathematical expression:

$$t_{op} = T \frac{13.5}{\left(\frac{I}{I_s}\right) - 1}$$

Extremely Inverse

With this characteristic the operating time is approximately inversely proportional to the square of the current. The long operating time of the IED at peak values of load current make the IED particularly suitable for grading with fuses and also for protection of feeders which are subject to peak currents on switching in, such as feeders supplying refrigerators, pumps, water heaters etc., which remain connected even after a prolonged interruption of supply.

For cases where the generation is practically constant and discrimination with low tripping times is difficult to obtain, because of the low impedance per line section, an extremely inverse configured IED can be very useful since only a small difference of current is necessary to obtain an adequate time difference.

Another application for this IED is with auto-reclosers in low voltage distribution circuits. As the majority of faults are of a transient nature, the IED is set to operate before the normal operating time of the fuse, thus preventing perhaps unnecessary blowing of the fuse.

Upon reclosure, if the fault persists, the recloser locks itself in the closed position and allows the fuse to blow to clear the fault.

This characteristic is also widely used for protecting plant against overheating since overheating is usually an I2t function.

This characteristic curve can be defined by the mathematical expression:

$$t_{op} = T \frac{80}{\left(\frac{I}{I_s}\right)^2 - 1}$$

UK Long Time Inverse

This type of characteristic has a long time characteristic and may be used for protection of neutral earthing resistors (which normally have a 30 second rating). The IED operating time at 5 times current setting is 30 seconds at a TMS of 1.

This can be defined by:

$$t_{op} = T \frac{120}{\left(\frac{I}{I_s}\right) - 1}$$

Rectifier

This characteristic curve can be defined by the mathematical expression:

$$t_{op} = T \frac{45900}{\left[\frac{I}{I_S}\right]^{5.6} - 1}$$

FR Short Time Inverse

This characteristic curve can be defined by the mathematical expression:

$$t_{op} = T \frac{0.05}{\left[\frac{I}{I_S}\right]^{0.04} - 1}$$

Standard Inverse (1.3S)

This characteristic curve can be defined by the mathematical expression:

$$t_{op} = T \frac{0.00607}{\left[\frac{I}{I_S}\right]^{0.02} - 1}$$

In the above equations:

- t_{op} is the operating time
- T is the time multiplier setting
- I is the measured current

I_s is the current threshold setting.

The ratio I/I_s is sometimes defined as 'M' or 'PSM' (Plug Setting Multiplier).

These curves are plotted as follows:

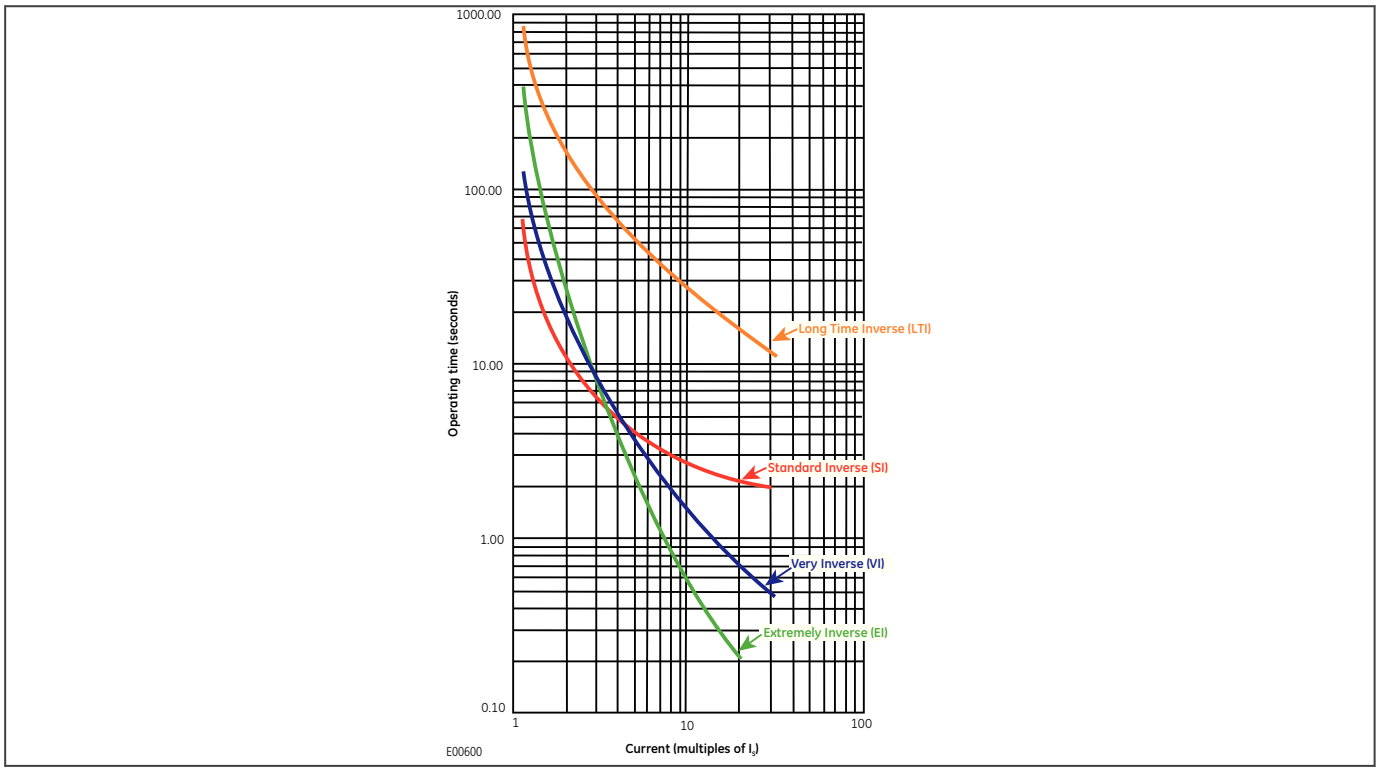

Figure 19: IEC 60255 IDMT curves

6.2.1.2 EUROPEAN STANDARDS

The IEC 60255 IDMT Operate equation is:

$$t_{op} = T\left(\frac{\beta}{M^{\alpha} - 1} + L\right) + C$$

and the IEC 60255 IDMT Reset equation is:

$$t_r = T\left(\frac{\beta}{1-M^{\alpha}}\right)$$

where:

- t_{op} is the operating time
- t_r is the reset time
- T is the Time Multiplier setting
- M is the ratio of the measured current divided by the threshold current (I/Is)
- β is a constant, which can be chosen to satisfy the required curve characteristic
- α is a constant, which can be chosen to satisfy the required curve characteristic
- C is a constant for adding Definite Time (Definite Time adder)
- L is a constant (usually only used for ANSI/IEEE curves)

The constant values for the IEC IDMT curves are as follows:

Curve Description	β Constant	α Constant	L Constant
IEC Standard Inverse Operate	0.14	0.02	0
IEC Standard Inverse Reset	8.2	6.45	0
IEC Very Inverse Operate	13.5	1	0
IEC Very Inverse Reset	50.92	2.4	0
IEC Extremely Inverse Operate	80	2	0
IEC Extremely Inverse Reset	44.1	3.03	0
UK Long Time Inverse Operate*	120	1	0
Rectifier Operate*	45900	5.6	0
FR Short Time Inverse Operate*	0.05	0.04	0
Standard Inverse (1.3s) Operate	0.0607	0.02	0
Standard Inverse (1.3s) Reset	3.55	6.45	0

Note:
** When using UK Long Time Inverse, Rectifier or FR Short time Inverse for the Operate characteristic, DT (Definite Time) is always used for the Reset characteristic.*

Rapid Inverse (RI) characteristic

The RI operate curve is represented by the following equation:

$$t_{op} = K\left(\frac{1}{0.339-\frac{0.236}{M}}\right)$$

where:

- t_{op} is the operating time
- K is the Time Multiplier setting
- M is the ratio of the measured current divided by the threshold current (I/I_s)

Note:
** When using RI for the Operate characteristic, DT (Definite Time) is always used for the Reset characteristic.*

6.2.1.3 NORTH AMERICAN STANDARDS

The IEEE IDMT Operate equation is:

$$t_{op} = TD\left(\frac{\beta}{M^{\alpha}-1}+L\right)+C$$

and the IEEE IDMT Reset equation is:

$$t_r = TD\left(\frac{\beta}{1-M^{\alpha}}\right)$$

where:

- t_{op} is the operating time
- t_r is the reset time
- TD is the Time Dial setting
- M is the ratio of the measured current divided by the threshold current (I/I_s)
- β is a constant, which can be chosen to satisfy the required curve characteristic
- α is a constant, which can be chosen to satisfy the required curve characteristic
- C is a constant for adding Definite Time (Definite Time adder)
- L is a constant (usually only used for ANSI/IEEE curves)

The constant values for the IEEE curves are as follows:

Curve Description	β Constant	α Constant	L Constant
IEEE Moderately Inverse Operate	0.0515	0.02	0.114
IEEE Moderately Inverse Reset	4.85	2	0
IEEE Very Inverse Operate	19.61	2	0.491
IEEE Very Inverse Reset	21.6	2	0
IEEE Extremely Inverse Operate	28.2	2	0.1217
IEEE Extremely Inverse Reset	29.1	2	0
CO8 US Inverse Operate	5.95	2	0.18
CO8 US Inverse Reset	5.95	2	0
CO2 US Short Time Inverse Operate	0.16758	0.02	0.11858
CO2 US Short Time Inverse Reset	2.261	2	0

6.2.1.3.1 ANSI CURVES

The ANSI Operate equation is:

$$T = TD \times \left[A + \frac{B}{\left(I / I_{pickup}\right) - C} + \frac{D}{\left(\left(I / I_{pickup}\right) - C\right)^2} + \frac{E}{\left(\left(I / I_{pickup}\right) - C\right)^3} \right]$$

$$t_r = TD \left(\frac{\beta}{1 - M^{\alpha}} \right)$$

And the ANSI Reset equation is:

$$T_{RESET} = TD \times \left[\frac{t_r}{1 - \left(I / I_{pickup}\right)^2} \right]$$

where:

- T = operate time (in seconds)
- TD = Time Dial setting
- I = measured current
- Ipickup = threshold Current
- A to E = constants
- tr = characteristic constant
- TRESET = reset time in seconds

The constant values for the ANSI curves are as follows:

Curve Description	A Constant	B Constant	C Constant	D Constant	E Constant	tr Constant
ANSI Extremely Inverse	0.0399	0.2294	0.5000	3.0094	0.7222	5.67
ANSI Very Inverse	0.0615	0.7989	0.3400	-0.2840	4.0505	3.88
ANSI Normally Inverse	0.0274	2.2614	0.3000	-4.1899	9.1272	5.95
ANSI Moderately Inverse	0.1735	0.6791	0.8000	-0.0800	0.1271	1.08

6.2.1.4 IAC CURVES

The IAC Operate equation is:

$$T = TD \times \left[A + \frac{B}{\left(I / I_{pickup}\right) - C} + \frac{D}{\left(\left(I / I_{pickup}\right) - C\right)^2} + \frac{E}{\left(\left(I / I_{pickup}\right) - C\right)^3} \right]$$

And the IAC Reset equation is:

$$T_{RESET} = TD \times \left[\frac{t_r}{1 - \left(I / I_{pickup}\right)^2} \right]$$

where:

- T = operate time (in seconds)
- TD = time dial setting
- I = measured current

- Ipickup = threshold current
- A to E = constants
- tr = characteristic constant, and
- TRESET = reset time in seconds

The constant values for the IAC curves are as follows:

Curve Description	A Constant	B Constant	C Constant	D Constant	E Constant	tr Constant
IAC Extremely Inverse	0.0040	0.6379	0.6200	1.7872	0.2461	6.008
IAC Very Inverse	0.0900	0.7965	0.1000	-1.2885	7.9586	4.678
IAC Normally Inverse	0.2078	0.8630	0.8000	-0.4180	0.1947	0.990
IAC Moderately Inverse	0.0428	0.0609	0.6200	-0.0010	0.0221	0.222

6.2.1.5 I2T CURVES

The I2T Operate equation is:

$$T = TD \times \left[\frac{100}{\left(I / I_{pickup} \right)^{2}} \right]$$

And the I2T Reset equation is:

$$T_{RESET} = TD \times \left[\frac{100}{\left(I / I_{pickup} \right)^{-2}} \right]$$

where:

- T = operate time (in seconds)
- TD = time dial setting
- I = measured current
- Ipickup = threshold current and
- TRESET = reset time in seconds

6.2.1.6 I4T CURVES

The I4T Operate equation is:

$$T = TD \times \left[\frac{100}{\left(I / I_{pickup} \right)^{4}} \right]$$

And the I4T Reset equation is:

$$T_{RESET} = TD \times \left[\frac{100}{\left(I / I_{pickup} \right)^{-4}} \right]$$

where:

- T = operate time (in seconds)
- TD = time dial setting
- I = measured current
- Ipickup = threshold current and
- TRESET = reset time in seconds

6.2.1.7 DIFFERENCES BETWEEN THE NORTH AMERICAN AND EUROPEAN STANDARDS

The IEEE and US curves are set differently to the IEC/UK curves, with regard to the time setting. A time multiplier setting (TMS) is used to adjust the operating time of the IEC curves, whereas a time dial setting is used for the IEEE/US curves. The menu is arranged such that if an IEC/UK curve is selected, the ***I>1 Time Dial*** setting is not visible and vice versa for the TMS setting.

6.2.1.8 PROGRAMMABLE CURVES

In addition to the standard curves as defined by various countries and standardising bodies, it is possible to program custom curves using User Curves, which can be programmed either through the IED front panel or through the EnerVista Configuration software (preferred option). There are 4 User Curves available. Each User Curve can be configured at the ***User Curve (n)*** menu available at ***SETPOINTS\SYSTEM\USER CURVES DATA***. The EnerVista Configuration software allows the creation of curves either by formula or by entering data points, allowing the user to have a standard curve as a reference. If the mode of entry selected is the IEDs front panel, the curve is created just by entering manually the curve data points.

User Curves help match more closely the withstand characteristics of the electrical equipment than the standard curves.

6.2.2 PRINCIPLES OF IMPLEMENTATION

The range of protection products provides a very wide range of protection functionality. Despite the diverse range of functionality provided, there is some commonality between the way many of the protection functions are implemented. It is important to describe some of these basic principles before going deeper into the individual protection functions.

A simple representation of protection functionality is shown in the following diagram:

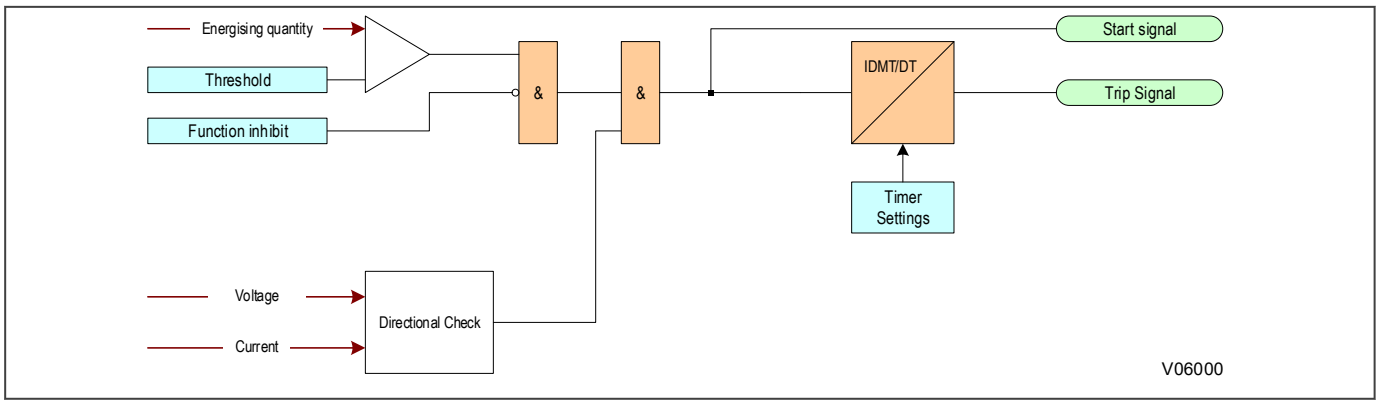

Figure 20: Principle of protection function implementation

An energising quantity is either a voltage input from a system voltage transformer, a current input from a system current transformer or another quantity derived from one or both of these. The energising quantities are extracted from the power system. The signals are converted to digital quantities where they can be processed by the IEDs internal processor.

In general, an energising quantity, be it a current, voltage, power, frequency, or phase quantity, is compared with a threshold value, which may be settable, or hard-coded depending on the function. If the quantity exceeds (for overvalues) or falls short of (for undervalues) the threshold, a signal is produced, which when gated with the various inhibit functions becomes the Start signal for that protection function. This Start signal is generally made available to the Flexlogic Equation Editor for further processing. It is also passed through a timer function to produce the Trip signal. The timer function may be an IDMT curve, or a Definite Time delay, depending on the function. The timer can be configured by a range of settings to define such parameters as the type of curve, The Time Multiplier Setting, the IDMT constants, the Definite Time delay etc.

In GE Vernova products, there are usually several independent stages for each of the functions, and for three-phase functions, there are usually independent stages for each of the three phases.

PTOC protection elements use an Inverse Definite Minimum Time (IDMT) timer function, and a Definite Time timer (DT) function. If the DT time delay is set to '0', then the function is known to be "instantaneous". In many instances, the term 'instantaneous protection" is used loosely to describe Definite Time protection stages, even when the stage may not theoretically be instantaneous.

Many protection functions require a direction-dependent decision. Such functions can only be implemented where both current and voltage inputs are available. For such functions, a directional check is required, whose output can block the Start signal should the direction of the fault be wrong.

Note:
In the logic diagrams and descriptive text, it is usually sufficient to show only the first stage, as the design principles for subsequent stages are usually the same (or at least very similar). Where there are differences between the functionality of different stages, this is clearly indicated.

6.2.2.1 TIMER HOLD FACILITY

The Timer Hold facility is available for stages with IDMT functionality, and is controlled by the timer reset settings for the relevant stages (e.g. ***I>1 tReset***, ***I>2 tReset***). These values are not visible for the IEEE/US curves if an inverse time reset characteristic has been selected, because in this case the reset time is determined by the time dial setting (TDS).

This feature may be useful in certain applications, such as when grading with upstream electromechanical overcurrent relays, which have inherent reset time delays. If you set the hold timer to a value other than zero, the resetting of the protection element timers will be delayed for this period. This allows the element to behave in a similar way to an electromechanical relay. If you set the hold timer to zero, the overcurrent timer for that stage will reset instantaneously as soon as the current falls below a specified percentage of the current setting (typically 95%).

Another situation where the timer hold facility may be used to reduce fault clearance times is for intermittent faults. An example of this may occur in a plastic insulated cable. In this application it is possible that the fault energy melts and reseals the cable insulation, thereby extinguishing the fault. This process repeats to give a succession of fault current pulses, each of increasing duration with reducing intervals between the pulses, until the fault becomes permanent.

When the reset time is instantaneous, the device will repeatedly reset and not be able to trip until the fault becomes permanent. By using the Timer Hold facility the device will integrate the fault current pulses, thereby reducing fault clearance time.

6.2.3 FUNCTION SETTING APPLICATION

The Function setting has an enumeration of `Disabled`, `Trip, Latched Trip, Alarm`, `Latched Alarm` or `Configurable` and is available in most of the elements. Selection of `Trip, Latched Trip, Alarm`, `Latched Alarm` or `Configurabl`e enables the element.

When the ***Alarm*** function is selected, and the element operates, the LED “ALARM” will flash, and will self-reset, when the operating conditions are cleared.

When the ***Latched Alarm*** function is selected, and the element operates, the LED “ALARM” will flash during the element operating condition and will be steady lit after the conditions are cleared. The LED “ALARM” can be cleared by issuing reset command. The output relay #1 “Trip” will not operate if Latched Alarm or Alarm setting is selected. The Output relay #1 “Trip” can be configured to operate using the element output operands and the Flexlogic Equation Editor.

The output relay #1 “Trip” will operate only when the ***Trip*** or ***Latched Trip*** function is selected, and the element operates. The LED “ALARM” will not turn on, if the element operates when set to function ***Trip*** or ***Latched Trip***.

When the ***Configurable*** function is selected, neither the trip output, nor the ALARM LED will turn on automatically. They need be configured using their own menus, FlexLogic operands and Flexlogic Equation Editor.

6.3 PHASE OVERCURRENT PROTECTION

Phase current faults are faults where fault current flows between two or more phases of a power system. The fault current may be between the phase conductors only or, between two or more phase conductors and earth.

Although not as common as earth faults (single phase to earth), phase faults are typically more severe.

6.3.1 PHASE OVERCURRENT PROTECTION IMPLEMENTATION

Phase Time Overcurrent Protection (PTOC) is configured under the path ***SETPOINTS\PROTECTION\GROUP [1-6\CURRENT PROT.\PHASE TOC***

Phase Instantaneous Overcurrent Protection (PIOC) is configured under the path ***SETPOINTS\PROTECTION \GROUP [1-6\CURRENT PROT.\PHASE IOC***

The product provides segregated three-phase time overcurrent protection and six-phase instantaneous overcurrent protection, each with independent time delay characteristics. The settings are independent for each stage, but for each stage, the settings apply to all phases.

Each stage of PTOC provides a choice of operate and reset characteristics, where you can select between:

- A range of IDMT (Inverse Definite Minimum Time) curves based on IEC, IEEE, ANSI and IAC standards
- A range of programmable user-defined curves
- DT (Definite Time) characteristic

For PTOC stage 1, this is achieved using the following settings:

- ***I>1 Curve*** for the overcurrent operate characteristic
- ***I>1 Reset Char*** if available, according to the ***I>1 Curve*** setting selection, for the overcurrent reset characteristic

The setting names for other stages follow the same principles.

For PIOC stage 1, there are no operate or reset characteristics but there are current pickup levels (current set), reset time and time delays:

- ***I>1 Current Set*** for the overcurrent pickup level
- ***I>1 tRESET*** for the overcurrent reset time
- ***I>1 Time Delay*** for the overcurrent time delay

The setting names for other stages follow the same principles.

6.3.2 NON-DIRECTIONAL OVERCURRENT LOGIC

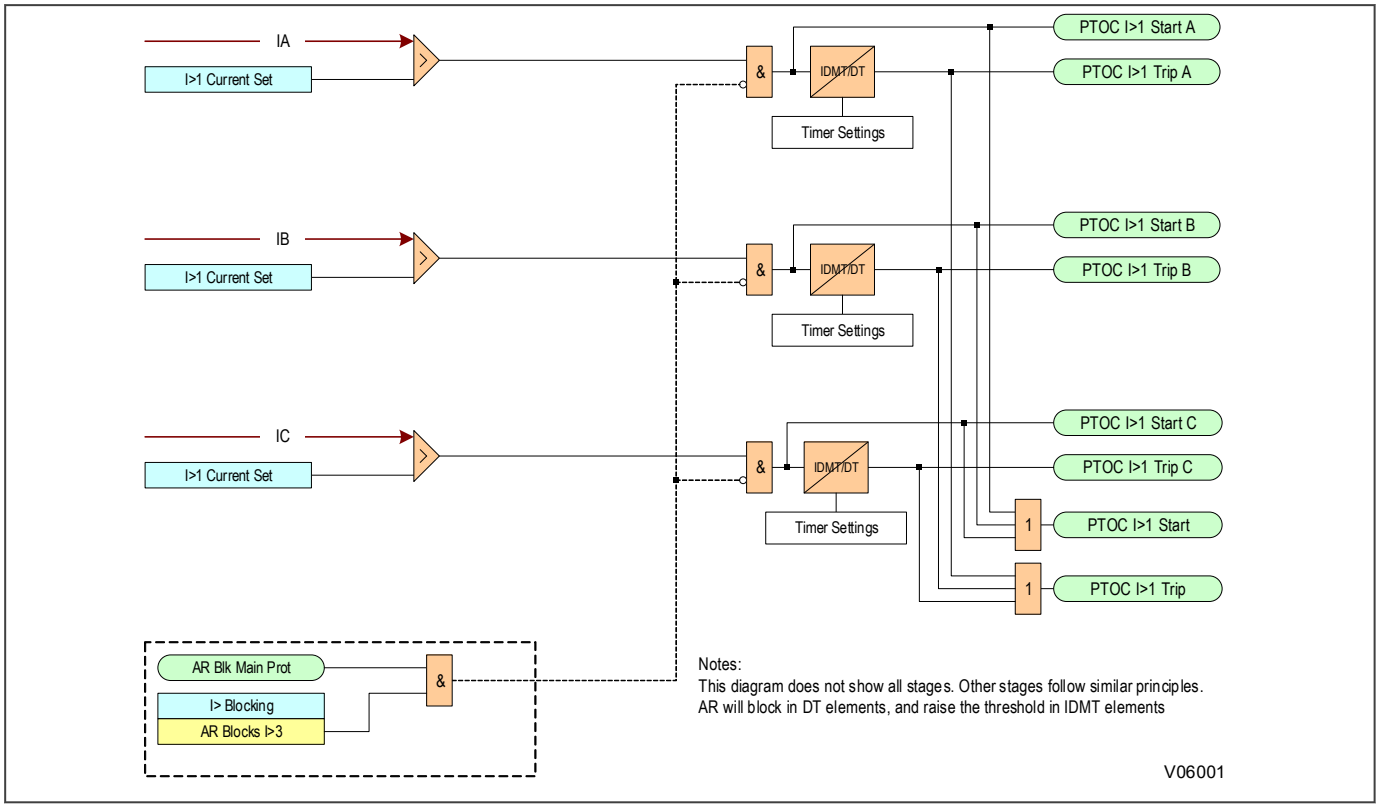

Figure 21: Non-directional overcurrent logic

Phase Overcurrent Modules are level detectors that detect when the current magnitude exceeds a set threshold. When this happens, a Start signal is generated unless it is inhibited by a blocking signal. This Start signal initiates the timer module, which can be configured as an IDMT timer or DT timer, for PTOC, or DT timer for PIOC respectively. The Start signal is also available for use in the Flexlogic Equation Editor. For each stage, there are three Phase Overcurrent Modules, one for each phase. The three Start signals from each of these phases are combined to form a 3-phase Start signal.

The timer can be configured with several settings depending on which type of curve is selected.

Taking stage 1 as an example:

I>1 Time Dial setting is the Time Multiplier Setting to adjust the operate time of IEEE M/V/E Inverse OR US Inverse/ Short Time OR ANSI E/V/N/M Inverse OR IAC E/V/N/S Inverse OR I2T OR I4T curves.

> *Note:*
> *The **I>1 Time Dial** setting can be made visible from setting management, only when Curve setting is selected as IEEE/US/ ANSI/IAC/I2T/I4T IDMT curves*

I>1 TMS setting is the Time Multiplier Setting to adjust the operate time of IEC S/V/E Inverse OR UK Long Time Inverse OR FR Short Time OR Rectifier OR Standard Inverse (1.3s).

> *Note:*
> *The **I>1 TMS** setting can be made visible from setting management, only when the **Curve** setting is selected as IEC/UK IDMT, Rectifier/Standard inverse curves.*

I>1 k (RI) setting defines the TMS constant to adjust the operate time of the RI curve.

Note:
*The **I>1 k (RI)** setting can be made visible from setting management, only when the **Curve** setting is selected as RI curves.*

I>1 MRT setting is the Minimum Response Time setting to set the minimum operating time for the Phase TOC element. If ***I>1 MRT*** setting is selected with a value different from zero, the Phase TOC element minimum operating time will be fixed by this setting, ensuring the operating time of the element never falls below this setting. The minimum operating time selected will be the maximum value between the curve value and the ***I>1 MRT*** setting, whichever is greater.

Note:
*The **I>1 MRT** setting can be made visible from the setting management, only when the Curve setting is selected as any type of curve (all curves but DT selection).*

Note:
*If **I>1** MRT setting is set to zero, the setting is disabled and just the curve time will apply.*

I>1 DT Adder setting adds an additional fixed time delay to the curve operate characteristics.

Note:
*The **I>1 DT Adder** setting can be made visible from the setting management, only when the **Curve** setting is selected as any type of curve but FlexCurves.*

I>1 Time Delay setting sets the definite Time delay for the Phase TOC element, when operate time is selected as Definite Time.

Note:
*The **I>1 Time Delay** setting can be made visible from setting management, only when the **Curve** setting is selected as DT (Definite Time).*

I>1 Reset Char setting allows the selection of an Definite Time (DT) or Inverse reset time. If ***DT*** reset is selected, the Phase TOC element will reset after a time delay provided by ***tRESET*** setting. If ***Inverse*** reset is selected, the time to reset is calculated based on the reset equation for the selected inverse curve.

When using UK Long Time Inverse, Rectifier, FR Short Time Inverse, RI curves for the Operate characteristic, it is always recommended to use DT for the Reset characteristic.

The outputs of the timer modules are the single-phase trip signals. These trip signals are combined to form a 3-phase Trip signal. The Trip signal is also available for use in the Flexlogic Equation Editor.

For close up three-phase faults, all three voltages will collapse to zero and no healthy phase voltages will be present. For this reason, the device includes a polarisation feature that stores the pre-fault voltage information and continues to apply this to the directional overcurrent elements for a period of 3 cycles. This ensures that either instantaneous or time-delayed directional overcurrent elements will be allowed to operate, even with a three-phase voltage collapse.

6.3.3 DIRECTIONAL ELEMENT

If fault current can flow in both directions through a protected location, you will need to use a directional overcurrent element to determine the direction of the fault. Once the direction has been determined the device can decide whether to allow tripping or to block tripping. To determine the direction of a phase overcurrent fault, the device must compare the phase angle of the fault current with that of a known reference quantity. The phase angle of this

known reference quantity must be independent of the faulted phase. Typically this will be the line voltage between the other two phases.

The phase fault elements of the IEDs are internally polarised by the quadrature phase-phase voltages, as shown in the table below:

Phase of Protection	Operate Current	Polarising Voltage
A Phase	IA	VBC
B Phase	IB	VCA
C Phase	IC	VAB

Under system fault conditions, the fault current vector lags its nominal phase voltage by an angle depending on the system X/R ratio. The IED must therefore operate with maximum sensitivity for currents lying in this region. This is achieved using the relay characteristic angle (RCA) setting. The RCA is the angle by which the current applied to the IED must be displaced from the voltage applied to the IED to obtain maximum sensitivity.

The characteristic angle can be set independently for each stage. For PTOC stage 1, for example, this would be the setting ***I>1 Char Angle***. It is possible to set characteristic angles anywhere in the range 0° to + 359°.

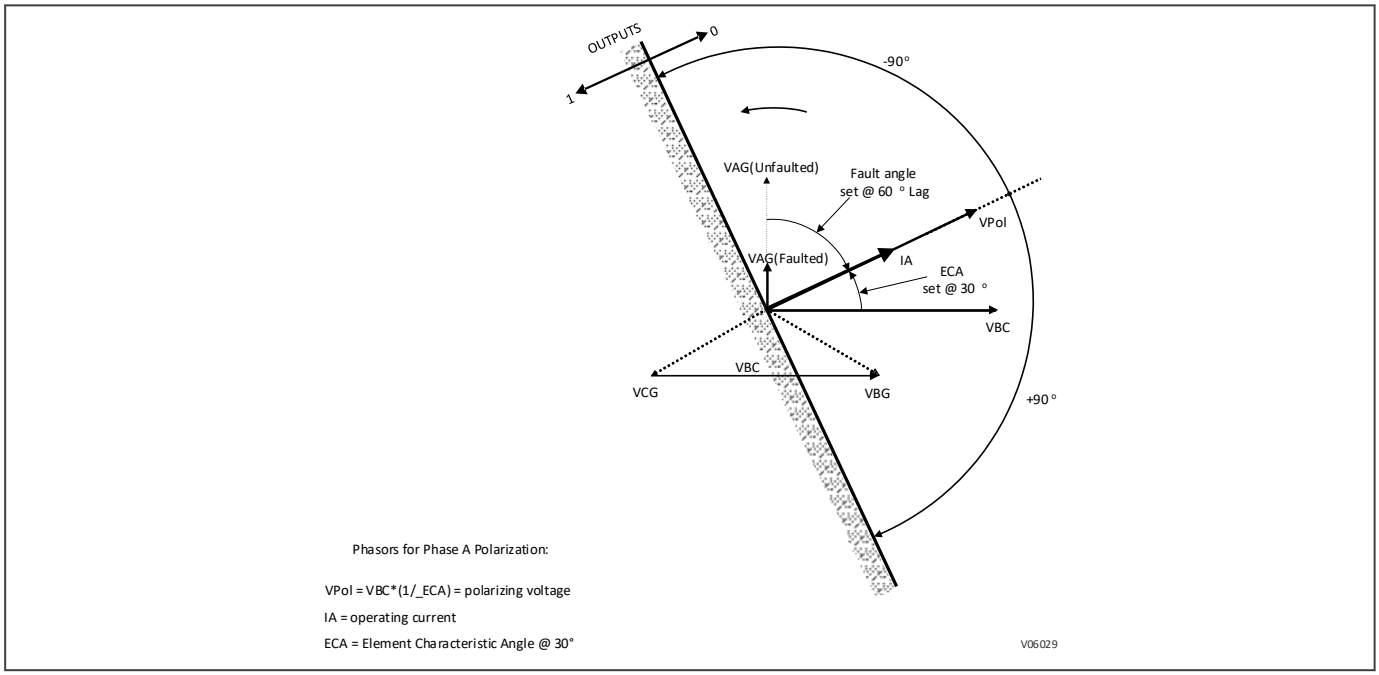

Figure 22: Directional trip angles

6.3.4 DIRECTIONAL OVERCURRENT LOGIC

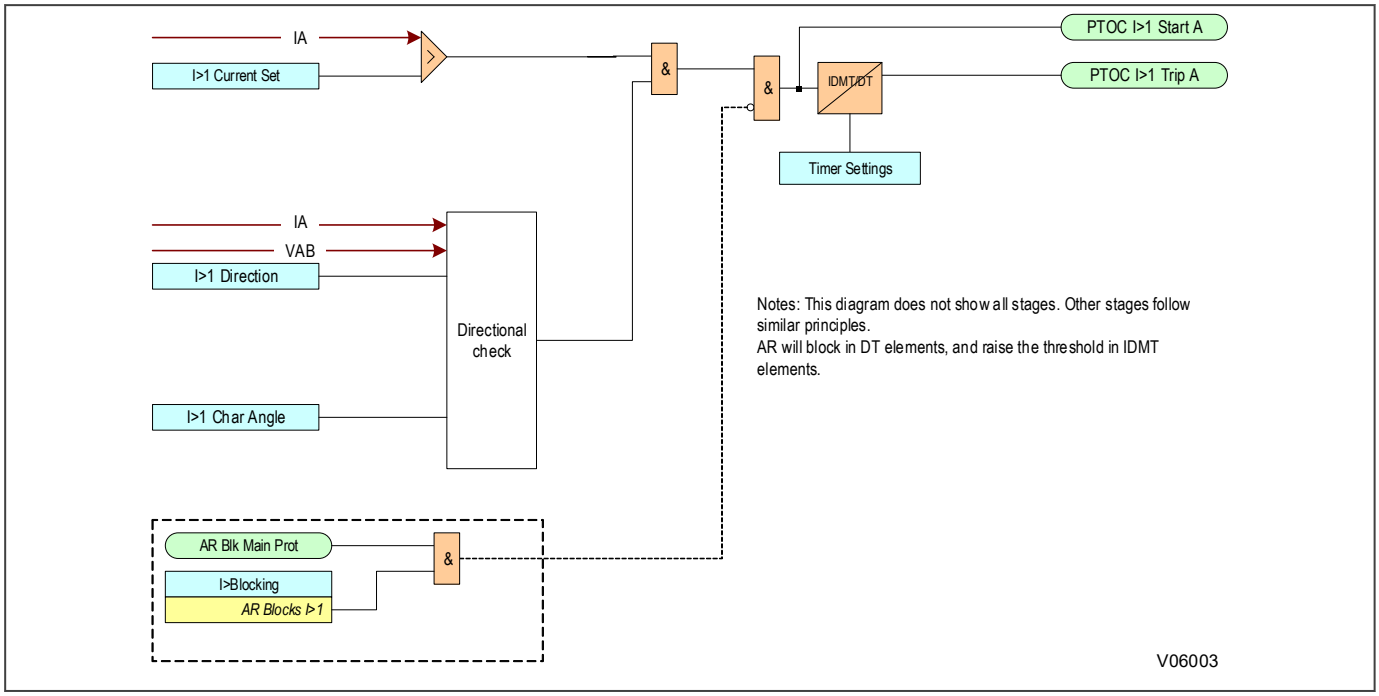

Figure 23: Directional overcurrent logic (Phase A only)

> *Note:*
> *Directional functionality is available for P14D only.*

6.3.5 APPLICATION NOTES

6.3.5.1 PARALLEL FEEDERS

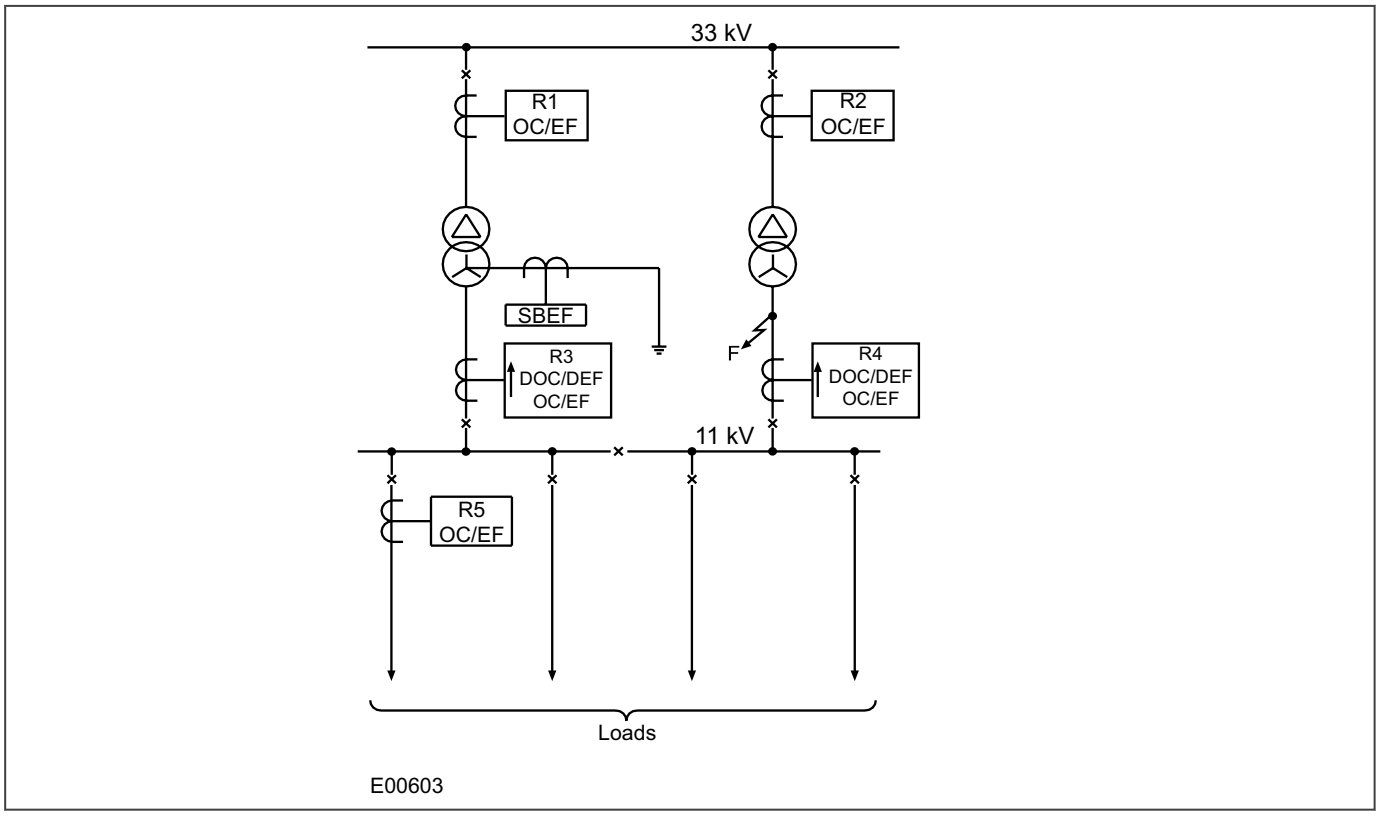

Figure 24: Typical distribution system using parallel transformers

In the application shown in the diagram, a fault at ‘F’ could result in the operation of both R3 and R4 resulting in the loss of supply to the 11 kV busbar. Hence, with this system configuration, it is necessary to apply directional protection devices at these locations set to 'look into' their respective transformers. These devices should co-ordinate with the non-directional devices, R1 and R2, to ensure discriminative operation during such fault conditions.

In such an application, R3 and R4 may commonly require non-directional overcurrent protection elements to provide protection to the 11 kV busbar, in addition to providing a back-up function to the overcurrent devices on the outgoing feeders (R5).

For this application, stage 1 of the R3 and R4 overcurrent protection would be set to non-directional and time graded with R5, using an appropriate time delay characteristic. Stage 2 could then be set to directional (looking back into the transformer) and also have a characteristic which provides correct co-ordination with R1 and R2. Directionality for each of the applicable overcurrent stages can be set in the directionality setting (***I>1 Direction***) as `FWD` or `REV`. The directional settings (RCA angle, etc.) are to be set at the different Dir OC menus available for each of the overcurrent stages. The direction for each overcurrent stage (Non-directional, Forward (FWD), Reverse(REV)) is set at each of the overcurrent protection function settings (***I>1 Direction***).

> *Note:*
> *The principles outlined for the parallel transformer application are equally applicable for plain feeders that are operating in parallel.*

6.3.5.2 RING MAIN ARRANGEMENTS

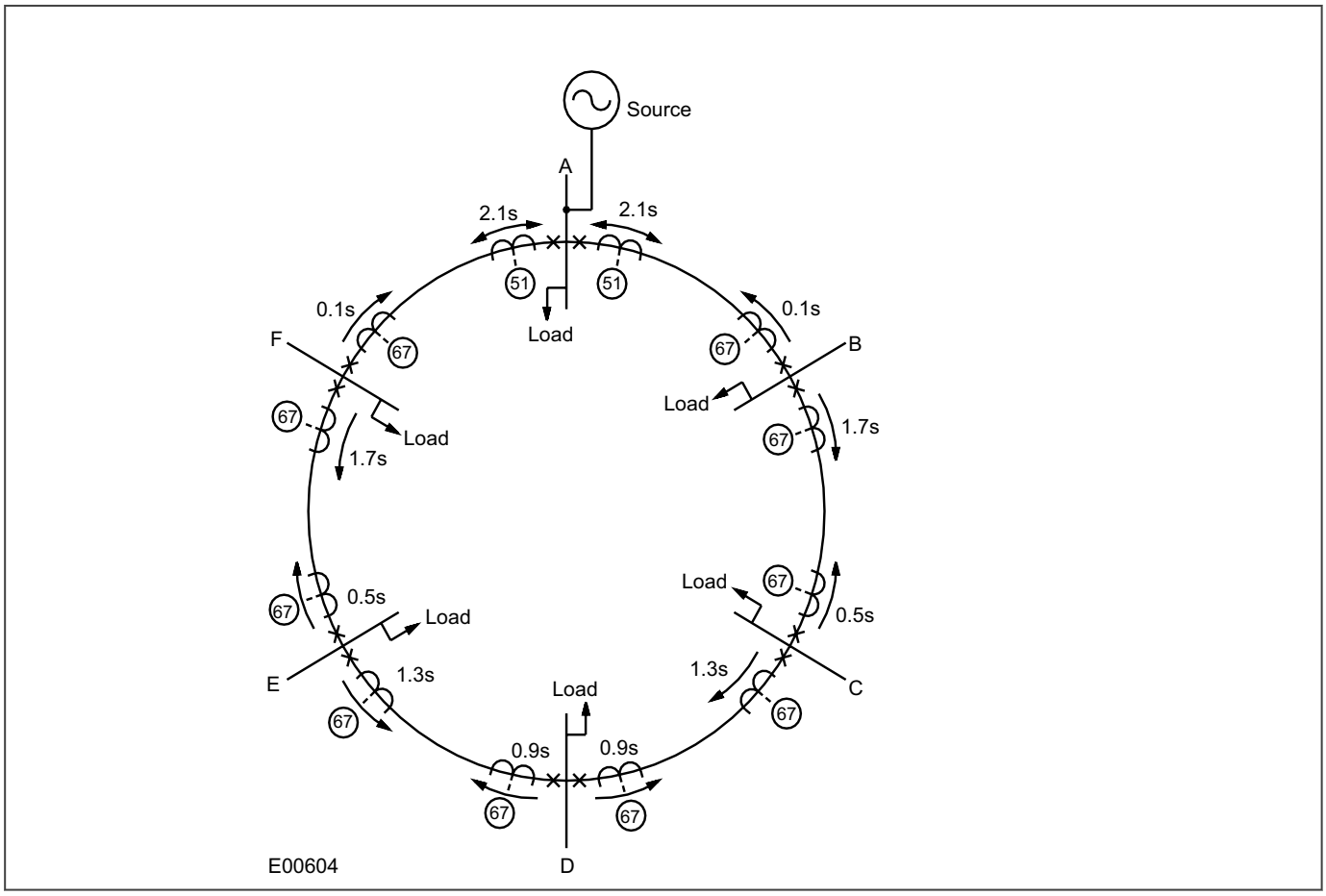

Figure 25: Typical ring main with associated overcurrent protection

In a ring main arrangement, current may flow in either direction through the various device locations, therefore directional overcurrent devices are needed to achieve correct discrimination.

The normal grading procedure for overcurrent devices protecting a ring main circuit is to consider the ring open at the supply point and to grade the devices first clockwise and then anti-clockwise. The arrows shown at the various device locations depict the direction for forward operation of the respective devices (i.e. the directional devices are set to look into the feeder that they are protecting).

The diagram shows typical time settings (assuming definite time co-ordination is used), from which it can be seen that any faults on the interconnections between stations are cleared discriminatively by the devices at each end of the feeder.

Any of the overcurrent stages may be configured to be directional and co-ordinated, but bear in mind that IDMT characteristics are not selectable on all the stages.

6.3.5.3 SETTING GUIDELINES

Standard principles should be applied in calculating the necessary current and time settings. The example detailed below shows a typical setting calculation and describes how the settings are applied.

This example is for a device feeding a LV switchboard and makes the following assumptions:

- CT Ratio = 500/1
- Full load current of circuit = 450A
- Slowest downstream protection = 100A Fuse

The current setting on the device must account for both the maximum load current and the reset ratio, therefore:

I> must be greater than: 450/dropout = 450/0.95 = 474A.

The required setting is 475A in terms of primary current.

A suitable time delayed characteristic will now need to be chosen. When co-ordinating with downstream fuses, the applied characteristic should be closely matched to the fuse characteristic. Therefore, assuming IDMT co-ordination is to be used, an Extremely Inverse (EI) characteristic would normally be chosen. This is found under the ***I>1 Curve*** setting as `IEC E Inverse`.

Finally, a suitable time multiplier setting (TMS) must be calculated and entered in setting ***I>1 TMS*.**

6.3.5.4 SETTING GUIDELINES (DIRECTIONAL ELEMENT)

The applied current settings for directional overcurrent devices are dependent upon the application in question. In a parallel feeder arrangement, load current is always flowing in the non-operate direction. Hence, the current setting may be less than the full load rating of the circuit.

You need to observe some setting constraints when applying directional overcurrent protection at the receiving-end of parallel feeders. These minimum safe settings are designed to ensure that there is no possibility of undesired tripping during clearance of a source fault. For a linear system load, these settings are as follows:

We recommend the following settings to ensure that there is no possibility of maloperation:

- Parallel plain feeders: Set to 50% pre-fault load current
- Parallel transformer feeders: Set to 87% pre-fault load current

In a ring main application, the load current can flow in either direction. The current setting must be above the maximum load current.

The required characteristic angle settings for directional devices depend on the application. We recommend the following settings:

- Plain feeders, or applications with an earthing point behind the device location, should use a +30° RCA setting
- Transformer feeders, or applications with a zero sequence source in front of the device location, should use a +45° RCA setting

Although it is possible to set the RCA to exactly match the system fault angle, we recommend that you adhere to the above guidelines, as these settings provide satisfactory performance and stability under a wide range of system conditions.

6.4 VOLTAGE DEPENDENT OVERCURRENT ELEMENT

An overcurrent protection scheme is co-ordinated throughout a system such that cascaded operation is achieved. This means that if for some reason a downstream circuit breaker fails to trip for a fault condition, the next upstream circuit breaker should trip.

However, where long feeders are protected by overcurrent protection, the detection of remote phase-to-phase faults may prove difficult due to the fact that the current pick-up of phase overcurrent elements must be set above the maximum load current, thereby limiting the minimum sensitivity.

If the current seen by a local device for a remote fault condition is below its overcurrent setting, a voltage dependent element may be used to increase the sensitivity to such faults. As a reduction in system voltage will occur during overcurrent conditions, this may be used to enhance the sensitivity of the overcurrent protection by reducing the pick up level.

Voltage dependent overcurrent devices are often applied in generator protection applications in order to give adequate sensitivity for close up fault conditions. The fault characteristic of this protection must then co-ordinate with any of the downstream overcurrent devices that are responsive to the current decrement condition. It therefore follows that if the device is to be applied to an outgoing feeder from a generator station, the use of voltage dependent overcurrent protection in the feeder device may allow better co-ordination with the Voltage Dependent device on the generator.

Note:
Voltage Dependent Overcurrent element is available in P14D only.

6.4.1 VOLTAGE DEPENDENT OVERCURRENT PROTECTION IMPLEMENTATION

Voltage Dependent Overcurrent Protection (***V Dep OC***) is set in ***Phase TOC***.

The function is available for each stage of ***PTOC***. When ***I>1 V Dep OC*** is enabled, the overcurrent setting is modified when the voltage falls below the thresholds set in the voltage dependent overcurrent settings.

If voltage dependent overcurrent operation is selected, the element can be set in one of two modes, voltage controlled overcurrent or voltage restrained overcurrent.

6.4.1.1 VOLTAGE CONTROLLED OVERCURRENT PROTECTION

In Voltage Controlled Operation (VCO) mode of operation, the under voltage detector is used to produce a step change in the current setting, when the voltage falls below the voltage setting ***V Dep OC V<1***. The operating characteristic of the current setting when voltage controlled mode is selected is as follows:

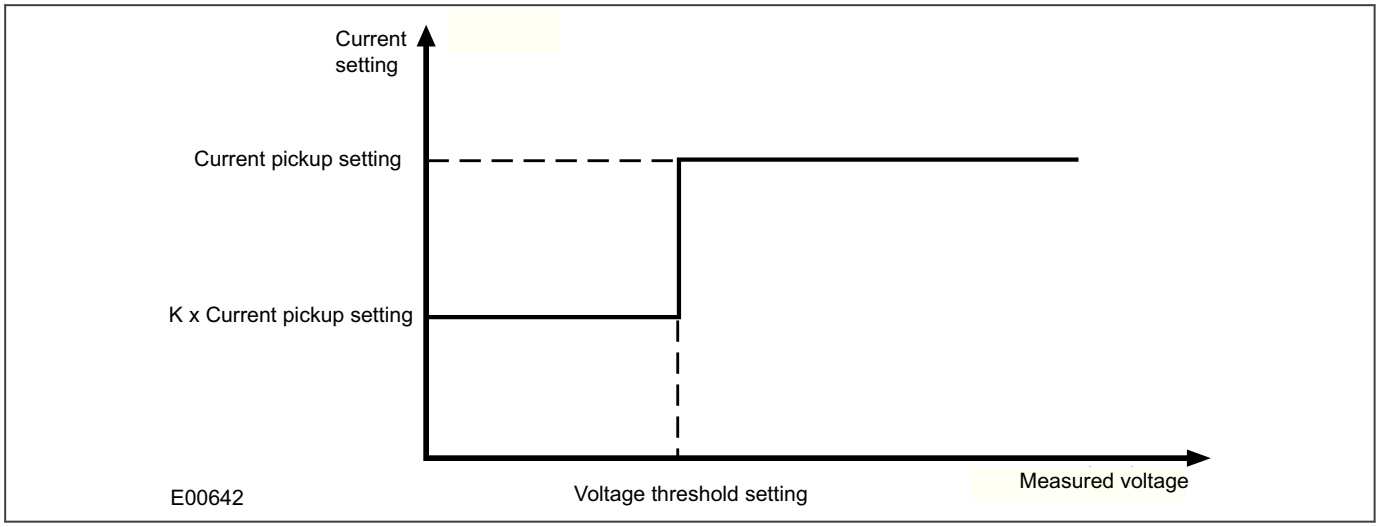

Figure 26: Modification of current pickup level for voltage controlled overcurrent protection

6.4.1.2 VOLTAGE RESTRAINED OVERCURRENT PROTECTION

In Voltage Restrained Operation (VRO) mode the effective operating current of the protection element is continuously variable as the applied voltage varies between two voltage thresholds. This protection mode is considered to be better suited to applications where the generator is connected to the system via a generator transformer.

With indirect connection of the generator, a solid phase-phase fault on the local busbar will result in only a partial phase-phase voltage collapse at the generator terminals.

The voltage-restrained current setting is related to measured voltage as follows:

- If V is greater than ***V<1***, the current setting (Is) = I>
- If V is greater than ***V<2*** but less than ***V<1***, the current setting (Is) =

$$KI > + \left(I > - KI \right) \frac{V - V < 2}{V < 1 - V < 2}$$

- If V is less than ***V<2***, the current setting (Is) = K.I>

where:

- I> = Over current stage setting
- Is = Current setting at voltage V
- V = Voltage applied to IED element
- V<1 = V Dep OC V<1
- V<2 = V Dep OC V<2

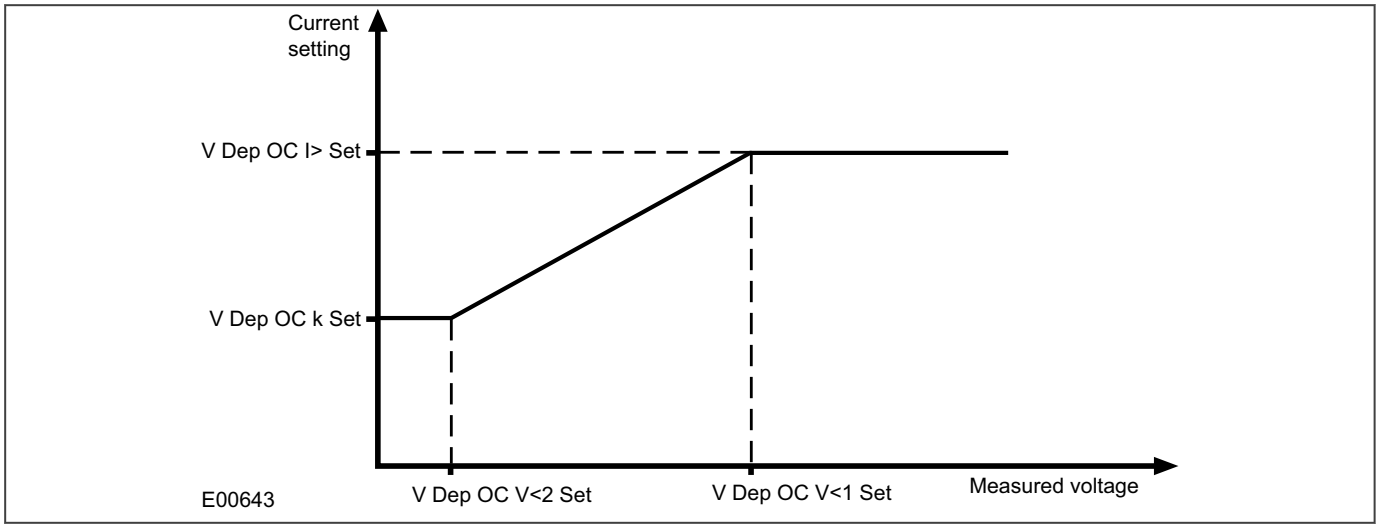

Figure 27: Modification of current pickup level for voltage restrained overcurrent protection

6.4.1.3 VOLTAGE DEPENDENT OVERCURRENT LOGIC

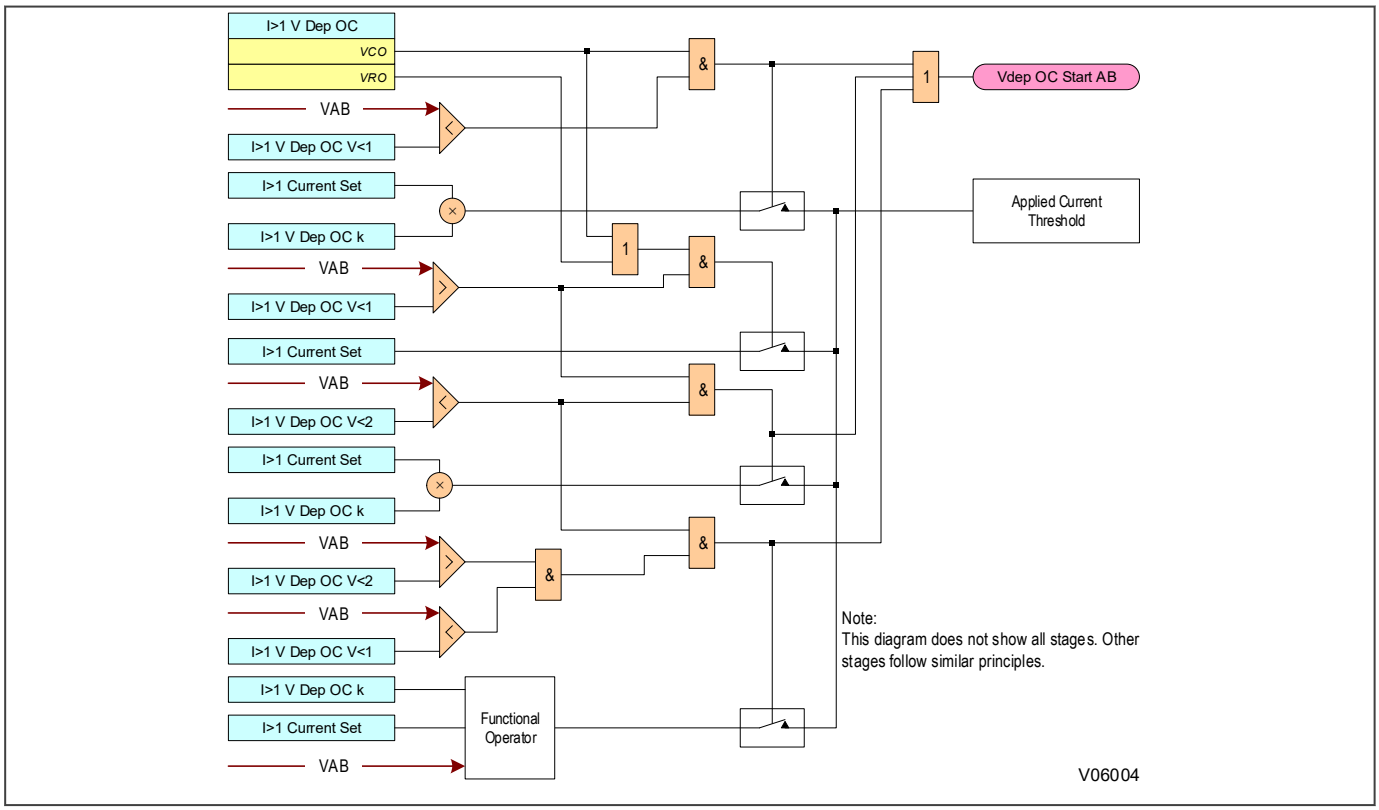

Figure 28: Voltage dependent overcurrent logic (Phase A to phase B)

The current threshold setting for the Overcurrent function is determined by the voltage.

If the voltage is greater than ***I>1 V Dep OC V<1*** setting, the normal overcurrent setting ***I>1 Current Set*** is used. this applies to both VCO and VRO modes.

If the voltage is less than the ***I>1 V Dep OC V<1*** setting AND it is in VCO mode, the overcurrent setting ***I>1 Current Set*** is multiplied by the factor set in the ***I>1 V Dep OC k*** setting.

If the voltage is less than the ***I>1 V Dep OC V<2*** setting AND it is in VRO mode, the overcurrent setting ***I>1 Current Set*** is multiplied by the factor set in the ***I>1 V Dep OC k*** setting.

If the voltage is between ***I>1 V Dep OC V<1*** and ***I>1 V Dep OC V<2*** settings AND it is in VRO mode, the overcurrent setting is multiplied by a functional operator to determine the setting.

6.4.2 APPLICATION NOTES

6.4.2.1 SETTING GUIDELINES

The ***I>1 V Dep OC k*** setting should be set low enough to allow operation for remote phase-to-phase faults, typically:

$$k = \frac{I_F}{1.2I>}$$

where:

- I_F = Minimum fault current expected for the remote fault
- I> = Phase current setting for the element to have VCO control

Example

If the overcurrent device has a setting of 160% In, but the minimum fault current for the remote fault condition is only 80% In, then the required k factor is given by:

$$k = \frac{0.8}{1.6 \times 1.2} = 0.42$$

The voltage threshold, ***I>1 V Dep OC V<(n)*** setting would be set below the lowest system voltage that may occur under normal system operating conditions, whilst ensuring correct detection of the remote fault.

6.5 NEGATIVE SEQUENCE OVERCURRENT PROTECTION

When applying standard phase overcurrent protection, the overcurrent elements must be set significantly higher than the maximum load current. This limits the element's sensitivity. Most protection schemes also use an earth fault element operating from residual current, which improves sensitivity for earth faults. However, certain faults may arise which can remain undetected by such schemes. Negative Phase Sequence Overcurrent elements can help in such cases.

Any unbalanced fault condition will produce a negative sequence current component. Therefore, a negative phase sequence overcurrent element can be used for both phase-to-phase and phase-to-earth faults. Negative Phase Sequence Overcurrent protection offers the following advantages:

- Negative phase sequence overcurrent elements are more sensitive to resistive phase-to-phase faults, where phase overcurrent elements may not operate.
- In certain applications, residual current may not be detected by an earth fault element due to the system configuration. For example, an earth fault element applied on the delta side of a delta-star transformer is unable to detect earth faults on the star side. However, negative sequence current will be present on both sides of the transformer for any fault condition, irrespective of the transformer configuration. Therefore, a negative phase sequence overcurrent element may be used to provide time-delayed back-up protection for any uncleared asymmetrical faults downstream.

6.5.1 NEGATIVE SEQUENCE OVERCURRENT PROTECTION IMPLEMENTATION

Negative Sequence Time Overcurrent Protection is implemented under the path ***Setpoints\Protection\Group [1-6]\Current Prot.\Neg Seq TOC***.

Negative Sequence Instantaneous Overcurrent Protection is implemented under the path ***Setpoints\Protection \Group [1-6]\Current Prot.\Neg Seq IOC***.

This relay is equipped with the Negative Sequence Time and Instantaneous Overcurrent protection element. The Negative Sequence Time Overcurrent element may be used to determine and clear unbalance in the system. The input for computing negative sequence current is the fundamental phasor value. The relay computes the negative sequence current magnitude |I2| using the following formula:

$|I2|=1/3 * |IA + IB*(1\angle 240º) + IC*(1\angle 120 º)|$

Neg Seq TOC pickup = |I2|

The Negative Sequence Instantaneous Overcurrent element may be used to determine and clear unbalance in the system. The input for computing negative sequence current is the fundamental phasor value. The relay computes the negative sequence current magnitude |I2| using the following formula:

$|I2|=1/3 * |IA + IB*(1\angle 240º) + IC*(1\angle 120 º)|$

The element responds to the negative-sequence current and applies a positive sequence restraint for better performance. A small portion (12.5%) of the positive sequence current magnitude is subtracted from the negative sequence current magnitude when forming the operating quantity:

Neg Seq IOC pickup = |I2| - K * |I1|

where K = 1/8 and $|I1| = 1/3 * |IA + IB*(1\angle 120º) + IC*(1\angle 240 º)|$

The positive sequence restraint allows for more sensitive settings by counterbalancing spurious negative-sequence currents resulting from:

- System unbalances under heavy load conditions
- Current transformer (CT) transformation errors during three-phase faults
- Fault inception and switch-off transients during three-phase faults

The product provides multiple stages of negative sequence overcurrent protection with independent time delay characteristics.

Each *NEG SEQ TOC* stage provides a choice of operate and reset characteristics, where you can select between:

- A range of standard IDMT (Inverse Definite Minimum Time) curves
- A range of User-defined curves
- DT (Definite Time)

For Neg Seq TOC stage 1, this is achieved using the following settings:

- ***I2>1 Curve*** for the overcurrent operate characteristic
- ***I2>1 Reset Char*** if available, depending on the ***I>1 Curve*** setting selection, for the overcurrent reset characteristic

The setting names for other stages follow the same principles.

For ***Neg Seq IOC*** stage 1, there are no operate or reset characteristic settings but there are current pickup levels (Current Set), reset time and time delays:

- ***I>1 Current Set*** for the negative sequence instantaneous overcurrent pickup level
- ***I>1 tReset*** for the negative sequence instantaneous overcurrent reset time
- ***I>1 Time Delay*** for the negative sequence instantaneous overcurrent time delay

The setting names for other stages follow the same principles.

6.5.2 NON-DIRECTIONAL NEGATIVE SEQUENCE OVERCURRENT LOGIC

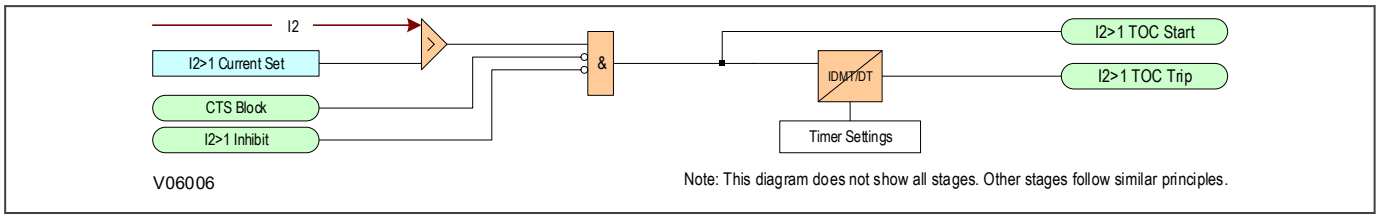

Figure 29: Negative sequence overcurrent logic - non-directional operation

For Negative Phase Sequence Overcurrent Protection, the energising quantity ***I2*** is compared with the threshold voltage ***I2>1 Current Set***. If the value exceeds this setting a Start signal is generated, provided there are no blocks.

The function can be blocked if a CTS condition is detected with inhibit signal.

The ***I2>1 (IOC, TOC) Start*** signal is fed into a timer to produce the ***I2>1 (IOC, TOC) Trip*** signal.

The timer settings can be configured with several settings depending on which type of curve is selected.

Taking stage 1 as an example:

I2>1 Time Dial setting is the Time Multiplier Setting to adjust the operate time of IEEE M/V/E Inverse OR US Inverse/Short Time OR ANSI E/V/N/M Inverse OR IAC E/V/N/S Inverse OR I2T OR I4T curves.

I2>1 TMS setting is the Time Multiplier Setting to adjust the operate time of IEC S/V/E Inverse OR UK Long Time Inverse OR FR Short Time OR Rectifier OR Standard Inverse (1.3s).

> *Note:*
> *The **I2>1 TMS** setting can be made visible from setting management, only when the **Curve** setting is selected as IEC/UK IDMT, Rectifier/Standard inverse curves.*

I2>1 k (RI) setting defines the TMS constant to adjust the operate time of the RI curve.

Note:
*The **I2>1 k (RI)** setting can be made visible from setting management, only when the **Curve** setting is selected as RI curves.*

I2>1 MRT setting is the Minimum Response Time setting to set the minimum operating time for the Negative Sequence TOC element. If ***I2>1 MRT*** setting is selected with a value different from zero, the Negative Sequence TOC element minimum operating time will be fixed by this setting, ensuring the operating time of the element never falls below this setting. The minimum operating time selected will be the maximum value between the curve value and the ***I2>1 MRT*** setting, whichever is greater.

Note:
*The **I2>1 MRT** setting can be made visible from setting management, only when the **Curve** setting is selected as any type of curve (all curves but DT selection).*

Note:
*If **I2>1 MRT** setting is set to zero, the setting is disabled and just the curve time will apply.*

I2>1 DT Adder setting adds an additional fixed time delay to the curve operate characteristics.

Note:
*The **I2>1 DT Adder** setting can be made visible from setting management, only when the **Curve** setting is selected as any type of curve but FlexCurves.*

I2>1 Time Delay setting sets the definite Time delay for the Negative Sequence TOC element, when operate time is selected as Definite Time.

Note:
*The **I2>1 Time Delay** setting can be made visible from setting management, only when the **Curve** setting is selected as DT (Definite Time).*

I2>1 Reset Char setting allows the selection of a Definite Time (DT) or Inverse reset time. If ***DT*** reset is selected, the Negative Sequence TOC element will reset after a time delay provided by ***tRESET*** setting. If ***Inverse*** reset is selected, the time to reset is calculated based on the reset equation for the selected inverse curve.

When using UK Long Time Inverse, Rectifier, FR Short Time Inverse, RI curves for the Operate characteristic, it is always recommended to use DT for the Reset characteristic.

This diagram and description applies to each stage.

6.5.3 DIRECTIONAL ELEMENT

Where negative phase sequence current may flow in either direction, directional control should be used.

Directionality is achieved by comparing the angle between the negative phase sequence voltage and the negative phase sequence current. A directional element is available for all of the negative sequence overcurrent stages. This is found in the ***I2>1 Direction*** setting for the relevant stage. It can be set to non-directional, directional forward, or directional reverse.

A suitable characteristic angle setting (***I2>1 Char Angle***) is chosen to provide optimum performance. This setting should be set equal to the phase angle of the negative sequence current with respect to the inverted negative sequence voltage (**–V2**), in order to be at the centre of the directional characteristic.

6.5.3.1 DIRECTIONAL NEGATIVE SEQUENCE OVERCURRENT

Mode	Operating Current
Negative Sequence	Iop = |I_2| - K x |I_1|

Direction	Compared Phasors	
Forward	-V_2	I_2 x 1 ∠ RCA
Reverse	-V_2	-(I_2 x 1 ∠ RCA)

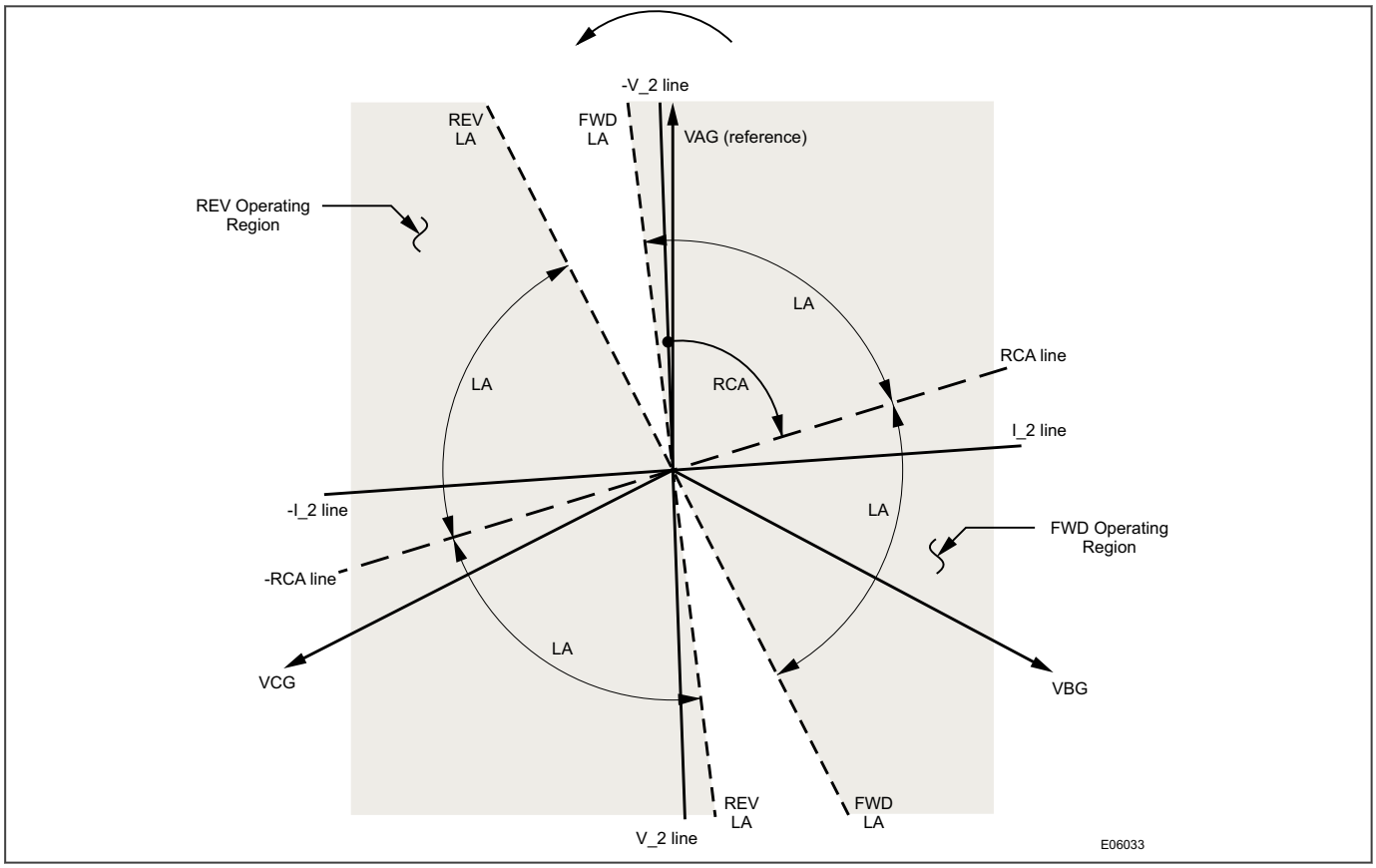

Figure 30: Negative sequence directional characteristic

6.5.3.2 DIRECTIONAL NEGATIVE SEQUENCE OVERCURRENT LOGIC

Directionality is achieved by comparing the angle between the negative phase sequence voltage and the negative phase sequence current. The element may be selected to operate in either the forward or reverse direction. A suitable characteristic angle setting (***I2>1 Char Angle***) is chosen to provide optimum performance. This setting should be set equal to the phase angle of the negative sequence current with respect to the inverted negative sequence voltage (–V2), in order to be at the centre of the directional characteristic.

The Multilin Agile IED equipped with the Negative Sequence Directional Overcurrent protection element provides both forward and reverse fault direction indications through its output operands `NEG SEQ DIR OC FWD` and `NEG SEQ DIR OC REV`, respectively. The output operand is asserted if the magnitude of the operating current is above a Pickup level (overcurrent unit) and the fault direction is seen as forward or reverse, respectively (directional unit).

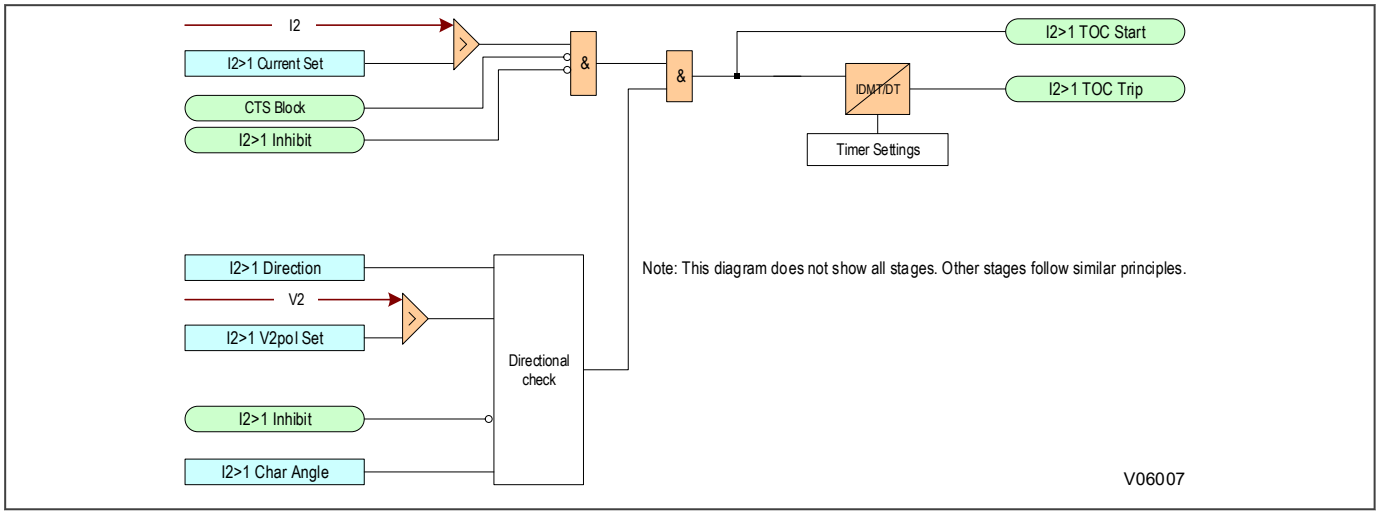

Figure 31: Negative sequence overcurrent logic - directional operation

> *Note:*
> *Directional functionality is available in P14D only.*

6.5.4 APPLICATION NOTES

6.5.4.1 SETTING GUIDELINES (CURRENT THRESHOLD)

A negative phase sequence element can be connected in the primary supply to the transformer and set as sensitively as required to protect for secondary phase-to-earth or phase-to-phase faults. This function will also provide better protection than the phase overcurrent function for internal transformer faults. The NPS overcurrent protection should be set to coordinate with the low-side phase and earth elements for phase-to-earth and phase-to-phase faults.

The current pickup threshold must be set higher than the negative phase sequence current due to the maximum normal load imbalance. This can be set practically at the commissioning stage, making use of the measurement function to display the standing negative phase sequence current. The setting should be at least 20% above this figure.

Where the negative phase sequence element needs to operate for specific uncleared asymmetric faults, a precise threshold setting would have to be based on an individual fault analysis for that particular system due to the complexities involved. However, to ensure operation of the protection, the current pickup setting must be set approximately 20% below the lowest calculated negative phase sequence fault current contribution to a specific remote fault condition.

6.5.4.2 SETTING GUIDELINES (TIME DELAY)

Correct setting of the time delay for this function is vital. You should also be very aware that this element is applied primarily to provide back-up protection to other protection devices or to provide an alarm. It would therefore normally have a long time delay.

The time delay set must be greater than the operating time of any other protection device (at minimum fault level) that may respond to unbalanced faults such as phase overcurrent elements and earth fault elements.

6.5.4.3 SETTING GUIDELINES (DIRECTIONAL ELEMENT)

Where negative phase sequence current may flow in either direction through an IED location, such as parallel lines or ring main systems, directional control of the element should be employed (VT models only).

Directionality is achieved by comparing the angle between the negative phase sequence voltage and the negative phase sequence current and the element may be selected to operate in either the forward or reverse direction. A suitable IED characteristic angle setting (***I2>1 Char Angle***) is chosen to provide optimum performance. This setting should be set equal to the phase angle of the negative sequence current with respect to the inverted negative sequence voltage (–V2), in order to be at the centre of the directional characteristic.

The angle that occurs between V2 and I2 under fault conditions is directly dependent on the negative sequence source impedance of the system. However, typical settings for the element are as follows:

- For a transmission system the relay characteristic angle (RCA) should be set equal to –60°
- For a distribution system the relay characteristic angle (RCA) should be set equal to –45°

6.6 SENSITIVE EARTH FAULT PROTECTION

With some earth faults, the fault current flowing to earth is limited by either intentional resistance (as is the case with some HV systems) or unintentional resistance (e.g. in very dry conditions and where the substrate is high resistance, such as sand or rock).

To provide protection in such cases, it is necessary to provide an earth fault protection system with a setting that is considerably lower than for normal line protection. Such sensitivity cannot be provided with conventional CTs, therefore the SEF input would normally be fed from a core balance current transformer (CBCT) mounted around the three phases of the feeder cable. The SEF transformer should be a special measurement class transformer.

6.6.1 SEF PROTECTION IMPLEMENTATION

SEF Time Overcurrent Protection is implemented under the path ***SETPOINTS\PROTECTION\GROUP [1-6]\CURRENT PROT.\SEF TOC***

SEF Instantaneous Overcurrent Protection is implemented under the path ***SETPOINTS\PROTECTION\GROUP [1-6]\CURRENT PROT.\SEF IOC***

The product provides ***SEF TOC*** protection with independent time delay characteristics:

- A range of IDMT (Inverse Definite Minimum Time) curves
- A range of User-defined curves
- DT (Definite Time)

For ***SEF TOC*** this is achieved using the following setpoints:

- ***ISEF>(n) Curve*** for the overcurrent operate characteristic
- ***ISEF>(n) Reset Chr*** if available, depending on the ***I>1 Curve*** setting selection, for the overcurrent reset characteristic

where (n) is the number of the stage.

For ***SEF IOC*** there are no operate or reset characteristic settings but current pickup levels (current) and reset time:

- ***ISEF>(n) Current*** for the SEF overcurrent pickup level
- ***ISEF>(n) tReset*** for the SEF overcurrent reset time
- ***ISEF>(n) Time Delay*** for the overcurrent time delay

where (n) is the number of the stage.

> *Note:*
> *The Current Cutoff setting configured under **SETPOINTS\DEVICE\INSTALLATION\CURRENT CUTOFF** is set to 0.020 p.u. as default factory value, so the SEF measurement starts metering from 20 mA on. If currents under 20 mA need to be measured, the **CURRENT CUTOFF** setting should be set to 0 p.u. or to whichever value meets the customer's requirement.*

The angle Phi is the angle difference between Isg and neutral voltage Vn.

The neutral voltage (Vn) must exceed the Voltage Cutoff level (setting path: ***Setpoints\Device\Installation***). This requirement ensures the validity of the neutral voltage signal, which is essential for determining the phase difference (Phi) between the sensitive ground current (Isg) and the neutral voltage (Vn). The phase difference is used to compute the operating quantities Isg×cos(Phi) and Isgxsin(Phi). If the neutral voltage signal is invalid, Isg×cos(Phi) and Isgxsin(Phi) cannot be used for fault indication.

When setting ***Ph VT Input*** is programmed to `Star`, voltage Vn is the residual voltage calculated from three phase voltages. When setting ***Ph VT Input*** is programmed to `Delta`, voltage Vn is the neutral voltage at the ***4th VT Input***. The setting ***4th VT Input*** must be programmed to `Vn`.

6.6.2 NON-DIRECTIONAL SEF LOGIC

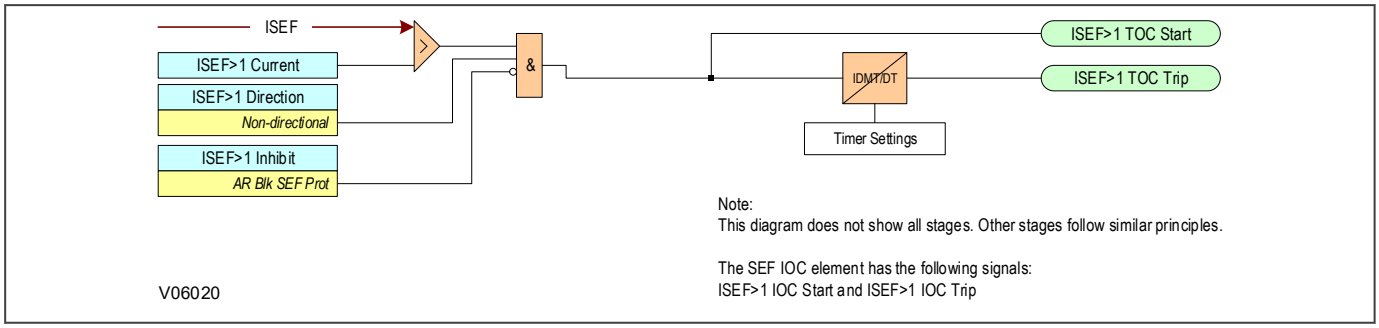

Figure 32: Non-directional SEF logic

The SEF current is compared with a set threshold (***ISEF>(n) Current***) for each stage. If it exceeds this threshold, a Start signal is triggered, providing it is not blocked. This can be blocked by an Inhibit signal configured at ***ISEF>(n) Inhibit*** setting.

The autoreclose logic can be set to block the SEF IOC start and trip after a prescribed number of shots in the ***Trip (n) SEF*** settings at ***SETPOINTS\CONTROL\AUTORECLOSE\AR SETUP*** menu. ***AR Blk SEF Prot*** is the FlexLogic signal that shows the AR blocking status for SEF IOC protection functions. This signal can be used as an inhibition signal for the SEF IOC if selected in ***ISEF>(n) Inhibit*** setting. It can also be used to create some logic configuration in the Flexlogic Equation Editor (***AR Blk Main Prot*** signal can be found under the Control Elements category in the Flexlogic Equation Editor inputs selection).

SEF Time Overcurrent protection can follow a subset of the IDMT characteristics as described in the Overcurrent Protection Principles section. Please refer to this section for details of the relevant IDMT characteristics.

The timer settings can be configured with several settings depending on which type of curve is selected.

Taking stage 1 as an example:

ISEF>1 Time Dial setting is the ***Time Multiplie***r Setting to adjust the operate time of IEEE M/V/E Inverse OR US Inverse/Short Time OR ANSI E/V/N/M Inverse OR IAC E/V/N/S Inverse OR I2T OR I4T curves.

> *Note:*
> *The **ISEF>1 Time Dial** setting can be made visible from setting management, only when **Curve** setting is selected as IEEE/US/ ANSI/IAC/I2T/I4T IDMT curves.*

ISEF>1 TMS setting is the ***Time Multiplier*** Setting to adjust the operate time of IEC S/V/E Inverse OR UK Long Time Inverse OR FR Short Time OR Rectifier OR Standard Inverse (1.3s).

> *Note:*
> *The **ISEF>1 TMS** setting can be made visible from setting management, only when the **Curve** setting is selected as IEC/UK IDMT, Rectifier/Standard inverse curves.*

ISEF>1 k (RI) setting defines the TMS constant to adjust the operate time of the RI curve.

> *Note:*
> *The **ISEF>1 k (RI)** setting can be made visible from setting management, only when the **Curve** setting is selected as RI curves.*

ISEF>1 MRT setting is the ***Minimum Response Time*** setting to set the minimum operating time for the Sensitive Earth Faut TOC element. If ***ISEF>1 MRT*** setting is selected with a value different from zero, the Sensitive Earth Fault TOC element minimum operating time will be fixed by this setting, ensuring the operating time of the element

never falls below this setting. The minimum operating time selected will be the maximum value between the curve value and the ***ISEF>1 MRT*** setting, whichever is greater.

> *Note:*
> *The **ISEF>1 MRT** setting can be made visible from setting management, only when the **Curve** setting is selected as any type of curve (all curves but DT selection).*

> *Note:*
> *If **ISEF>1 MRT** setting is set to zero, the setting is disabled and just the curve time will apply.*

ISEF>1 DT Adder setting adds an additional fixed time delay to the curve operate characteristics.

> *Note:*
> *The **ISEF>1 DT Adder** setting can be made visible from setting management, only when the **Curve** setting is selected as any type of curve but FlexCurves.*

ISEF>1 Time Delay setting sets the definite Time delay for the Sensitive Earth Fault TOC element, when operate time is selected as Definite Time.

> *Note:*
> *The **ISEF>1 Time Delay** setting can be made visible from setting management, only when the **Curve** setting is selected as DT (Definite Time).*

ISEF>1 Reset Char setting allows the selection of a Definite Time (DT) or Inverse reset time. If ***DT*** reset is selected, the Sensitive Earth Fault TOC element will reset after a time delay provided by ***tRESET*** setting. If ***Inverse*** reset is selected, the time to reset is calculated based on the reset equation for the selected inverse curve.

When using UK Long Time Inverse, Rectifier, FR Short Time Inverse, RI curves for the Operate characteristic, it is always recommended to use DT for the Reset characteristic.

6.6.3 DIRECTIONAL ELEMENT

Where current may flow in either direction, directional control should be used.

A directional element is available for all of the SEF overcurrent stages. This is found in the ***ISEF>(n) Direction*** setting for the relevant stage. It can be set to non-directional, directional forward, or directional reverse.

The device supports standard core-balanced directional control.

6.6.3.1 DIRECTIONAL SEF LOGIC

The Multilin Agile IED equipped with the Sensitive Earth Fault Directional Overcurrent protection element provides both forward and reverse fault direction indications: the SEF Dir OC FWD and SEF Dir OC REV operands, respectively. The output operands are asserted if the magnitude of the operating current is above a Pickup level (overcurrent unit) and the fault direction is seen as forward or reverse, respectively (directional unit).

The overcurrent unit responds to the magnitude of a fundamental frequency phasor of the sensitive ground current. There are separate Pickup settings for the forward-looking and reverse-looking functions.

The directional unit uses the sensitive ground current (Isg) for fault direction discrimination and may be programmed to use zero-sequence voltage (“Calculated V0” or “Measured VX”), for polarising. The following tables define the sensitive ground directional overcurrent element.

Directional Unit				Overcurrent Unit
Polarising Mode	**Direction**	**Compared Phasors**		
Voltage	Forward	V_0	Isg	Sensitive Ground Current (Isg)
	Reverse	–V_0	–Isg	

Where: V_0 = 1/3 * (Vag + Vbg + Vcg) = zero sequence voltage

When ***POLARISING VOLTAGE*** is set to “Measured VX”, one-third of this voltage is used in place of V_0. The following figure explains the usage of the voltage polarised directional unit of the element.

The figure below shows the voltage-polarised phase angle comparator characteristics for a phase A to ground fault, with:

- RCA = 90° (element characteristic angle = centerline of operating characteristic)
- FWD LA = 80° (forward limit angle = the ± angular limit with the RCA for operation)
- REV LA = 80° (reverse limit angle = the ± angular limit with the RCA for operation)

The element incorporates a current reversal logic: if the reverse direction is indicated for at least 1.25 of a power system cycle, the prospective forward indication will be delayed by 1.5 of a power system cycle. The element is designed to emulate an electromechanical directional device. Larger operating and polarising signals will result in faster directional discrimination bringing more security to the element operation.

The forward-looking function is designed to be more secure as compared to the reverse-looking function, and therefore, should be used for the tripping direction. The reverse-looking function is designed to be faster as compared to the forward-looking function and should be used for the blocking direction. This allows for better protection coordination.

The above bias should be taken into account when using the sensitive ground directional overcurrent element to directionalise other protection elements.

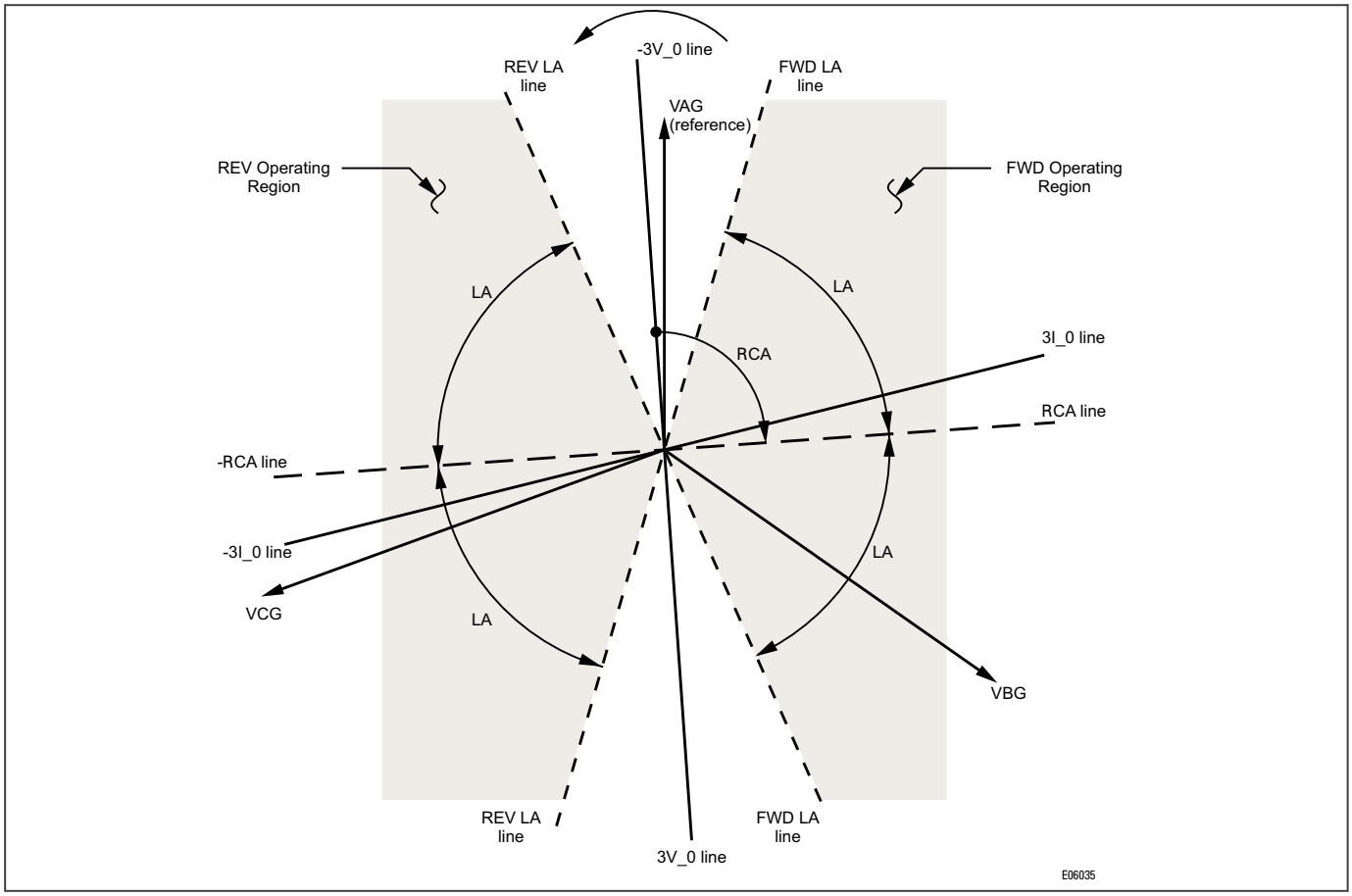

Figure 33: SEF voltage-polarised characteristics

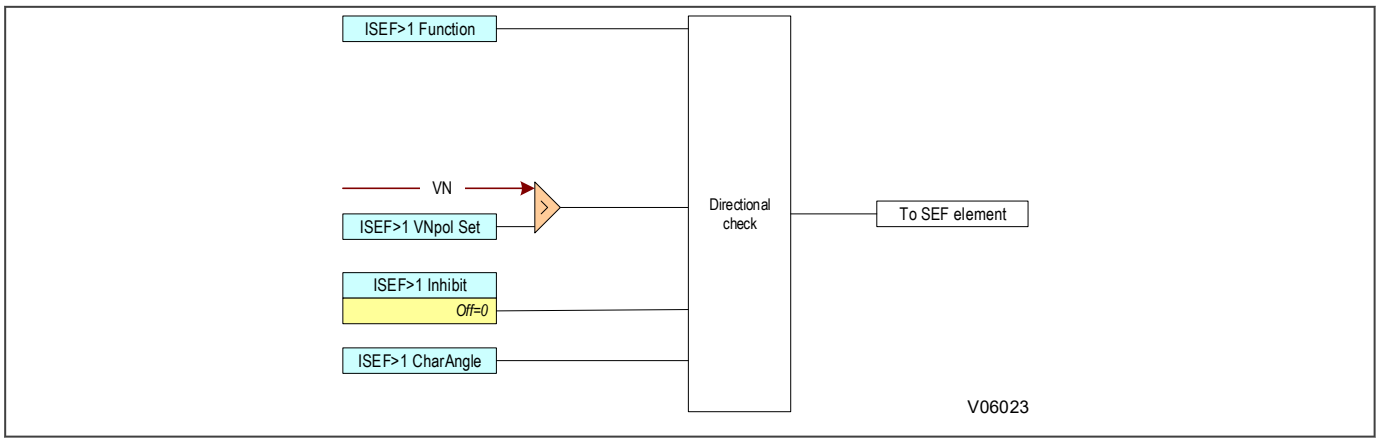

Figure 34: Directional SEF with VN polarisation (single stage)

The polarisation voltage can be selected between the derived and measured values of the residual voltage by selecting `Calculated V0` or `Measured VN` in the ***ISEF>1 VNpol Inp*** setting. If the Measured VN option is selected, the ***4th VT Input*** setting at ***SETPOINTS\SYSTEM\VT RATIO*** should be selected as `Vn` to measure the VN voltage from the 4th VT input.

> *Note:*
> *Directional functionality is available in P14D only.*

6.6.4 APPLICATION NOTES

6.6.4.1 INSULATED SYSTEMS

When insulated systems are used, it is not possible to detect faults using standard earth fault protection. It is possible to use a residual overvoltage device to achieve this, but even with this method full discrimination is not possible. Fully discriminative earth fault protection on this type of system can only be achieved by using a SEF (Sensitive Earth Fault) element. This type of protection detects the resultant imbalance in the system charging currents that occurs under earth fault conditions. A core balanced CT must be used for this application. This eliminates the possibility of spill current that may arise from slight mismatches between residually connected line CTs. It also enables a much lower CT ratio to be applied, thereby allowing the required protection sensitivity to be more easily achieved.

The following diagram shows an insulated system with a C-phase fault.

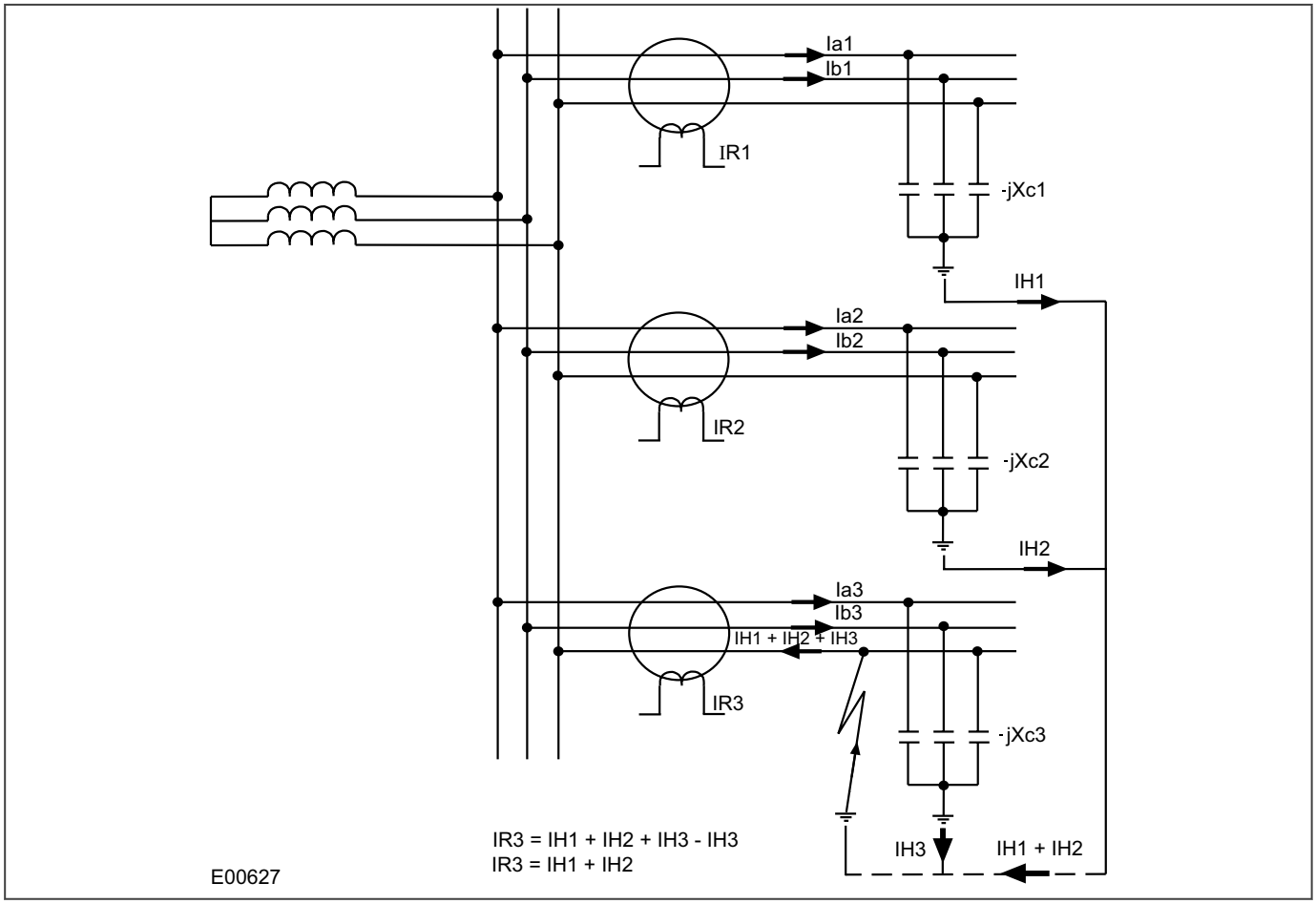

Figure 35: Current distribution in an insulated system with C phase fault

The protection elements on the healthy feeder see the charging current imbalance for their own feeder. The protection element on the faulted feeder, however, sees the charging current from the rest of the system (IH1 and IH2 in this case). Its own feeder's charging current (IH3) is cancelled out.

With reference to the associated vector diagram, it can be seen that the C-phase to earth fault causes the voltages on the healthy phases to rise by a factor of √3. The A-phase charging current (Ia1), leads the resultant A phase voltage by 90°. Likewise, the B-phase charging current leads the resultant Vb by 90°.

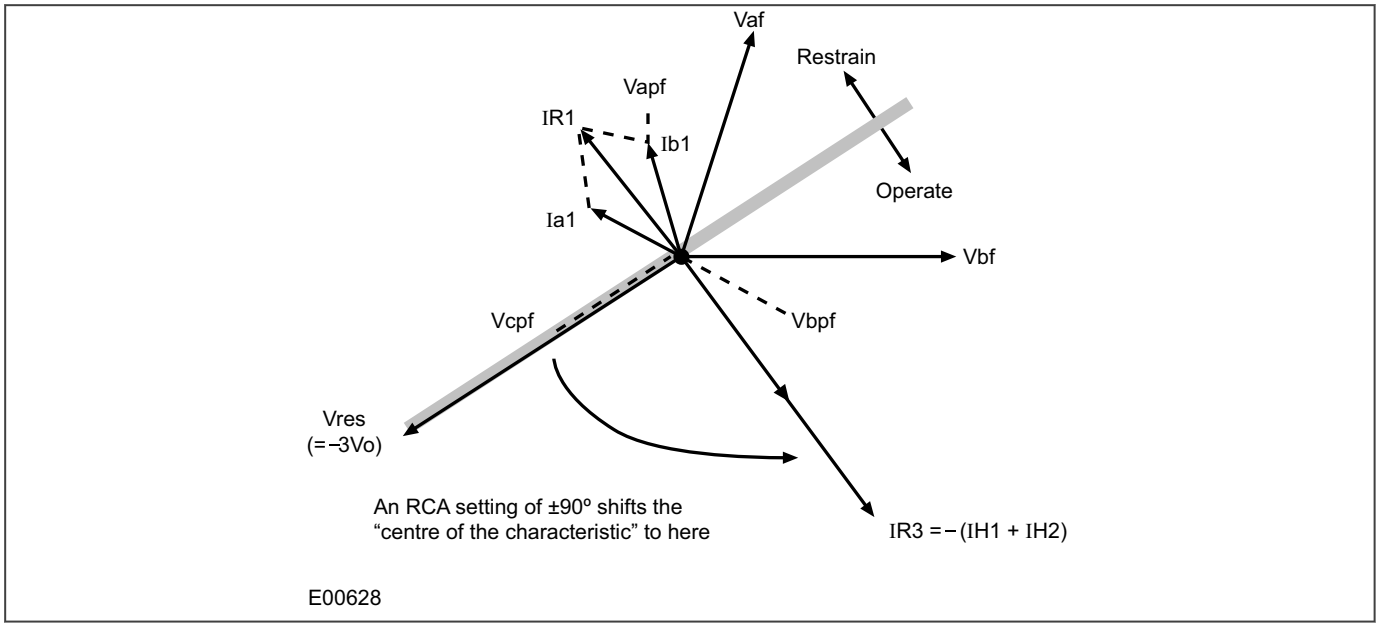

Figure 36: Phasor diagrams for insulated system with C phase fault

The current imbalance detected by a core balanced current transformer on the healthy feeders is the vector addition of Ia1 and Ib1. This gives a residual current which lags the polarising voltage (–3Vo) by 90°. As the healthy phase voltages have risen by a factor of √3, the charging currents on these phases are also √3 times larger than their steady state values. Therefore, the magnitude of the residual current IR1, is equal to 3 times the steady state per phase charging current.

The phasor diagram indicates that the residual currents on the healthy and faulted feeders (IR1 and IR3 respectively) are in anti-phase. A directional element (if available) could therefore be used to provide discriminative earth fault protection.

If the polarising is shifted through +90°, the residual current seen by the IED on the faulted feeder will lie within the operate region of the directional characteristic and the current on the healthy feeders will fall within the restrain region.

The required characteristic angle setting for the SEF element when applied to insulated systems, is +90°. This is for the case when the protection is connected such that its direction of current flow for operation is from the source busbar towards the feeder. If the forward direction for operation were set such that it is from the feeder into the busbar, then a –90° RCA would be required.

Note:
Discrimination can be provided without the need for directional control. This can only be achieved, however, if it is possible to set the IED in excess of the charging current of the protected feeder and below the charging current for the rest of the system.

6.6.4.2 SETTING GUIDELINES (INSULATED SYSTEMS)

The residual current on the faulted feeder is equal to the sum of the charging currents flowing from the rest of the system. Further, the addition of the two healthy phase charging currents on each feeder gives a total charging current which has a magnitude of three times the per phase value. Therefore, the total imbalance current is equal to three times the per phase charging current of the rest of the system. A typical setting may therefore be in the order of 30% of this value, i.e. equal to the per phase charging current of the remaining system. Practically though, the required setting may well be determined on site, where suitable settings can be adopted based on practically obtained results.

When using a core-balanced transformer, care must be taken in the positioning of the CT with respect to the earthing of the cable sheath:

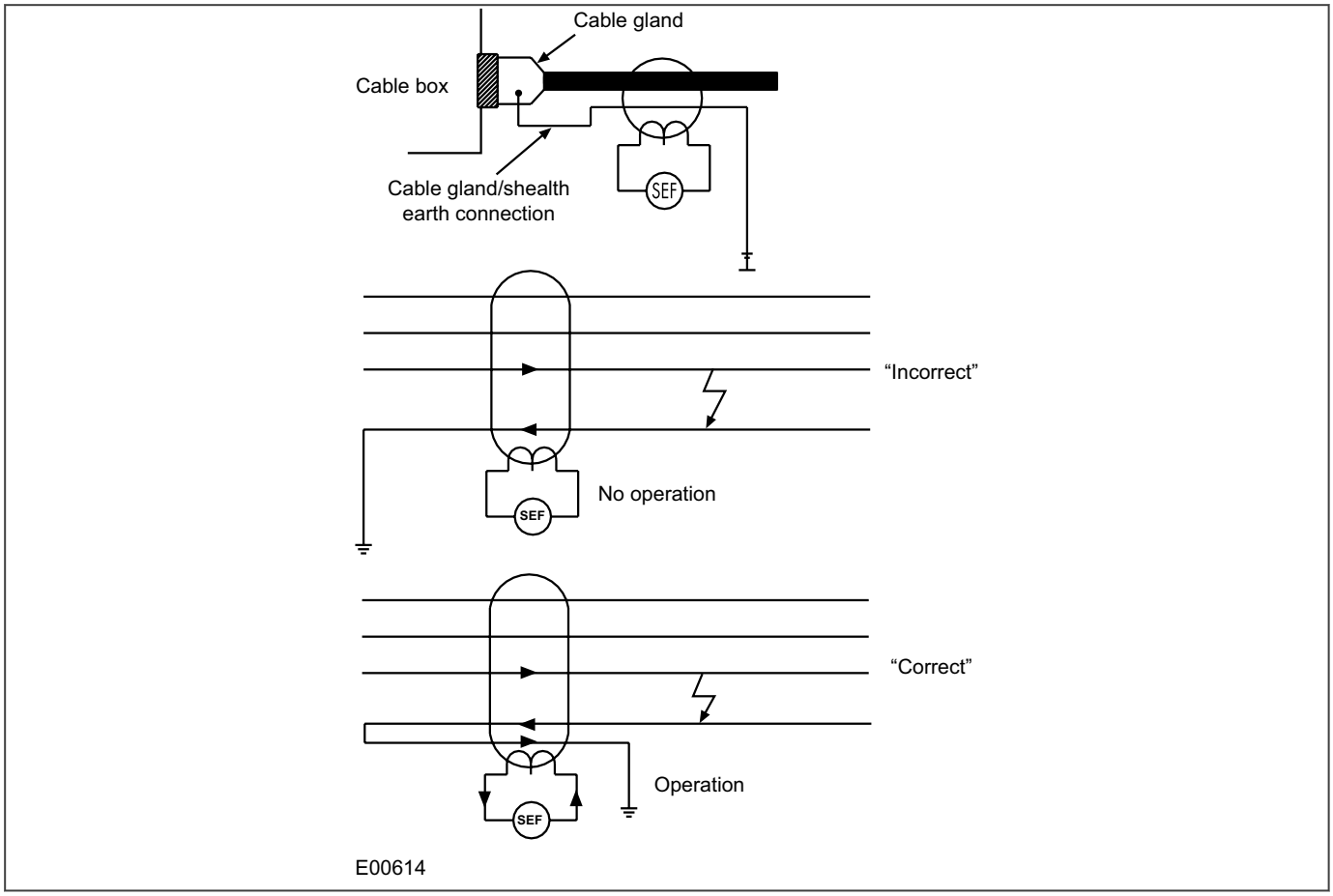

Figure 37: Positioning of core balance current transformers

If the cable sheath is terminated at the cable gland and directly earthed at that point, a cable fault (from phase to sheath) will not result in any unbalanced current in the core balance CT. Therefore, prior to earthing, the connection must be brought back through the CBCT and earthed on the feeder side. This then ensures correct IED operation during earth fault conditions.

6.7 COLD LOAD PICKUP

When a feeder circuit breaker is closed in order to energise a load, the current levels that flow for a period of time following energisation may be far greater than the normal load levels. Consequently, overcurrent settings that have been applied to provide overcurrent protection may not be suitable during this period of energisation (cold load), as they may initiate undesired tripping of the circuit breaker. This scenario can be prevented with Cold Load Pickup (CLP) functionality.

The Cold Load Pickup (CLP) logic works by either:

- Blocking one or more stages of the overcurrent protection for a set duration
- Raising the overcurrent settings of selected stages, for the cold loading period.

The CLP logic therefore provides stability, whilst maintaining protection during the start-up.

6.7.1 IMPLEMENTATION

Cold Load Pickup Protection is configured under the path ***SETPOINTS\CONTROL\CLP***.

This function acts upon the following protection functions:

- All overcurrent stages (both non-directional and directional if applicable)
- All Earth Fault 1 stages (both non-directional and directional if applicable)
- All Earth Fault 2 stages (both non-directional and directional if applicable)
- All negative sequence overcurrent stages

CLP operation occurs when the circuit breaker remains open for a time greater than ***tcold Time Delay*** and is subsequently closed. CLP operation is applied after ***tcold Time Delay*** and remains for a set time delay of ***tclp Time Delay*** following closure of the circuit breaker. Whilst CLP operation is in force, the CLP settings are enabled. After the time delay ***tclp Time Delay*** has elapsed, the normal overcurrent settings are applied and the CLP settings are disabled.

If desired, instead of applying different current setting thresholds for the cold load time, it is also possible to completely block the overcurrent operation during this time, for any of the overcurrent stages.

Voltage-dependent operation can also affect the overcurrent settings. If a Voltage Dependent condition arises, this takes precedence over the CLP function. If the CLP condition prevails and the Voltage Dependent function resets, the device will operate using the CLP settings. Time-delayed elements are reset to zero if they are disabled during the transitions between normal settings and CLP settings.

6.7.2 CLP LOGIC

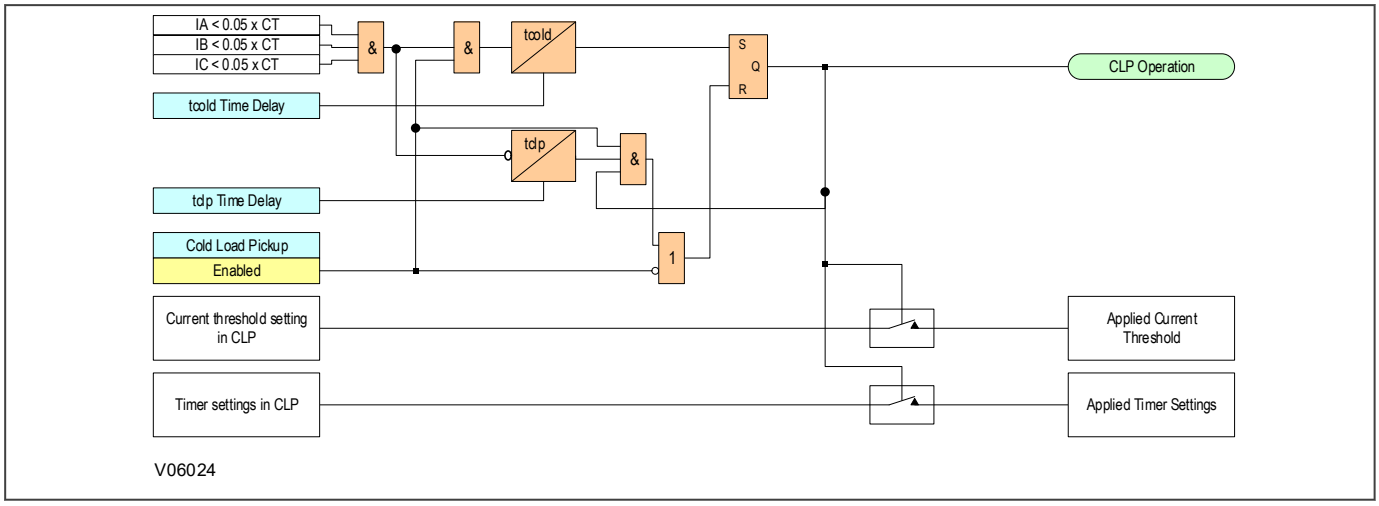

Figure 38: Cold load pickup logic

The CLP Operation signal indicates that CLP logic is in operation. This only happens when CLP is enabled AND CLP is initiated from an undercurrent function after the ***tcold Time Delay*** period has elapsed. The CLP Operation indicator goes low when CLP is disabled or when there is a CB closed condition.

tcold Time Delay and ***tclp Time Delay*** are initiated via the undercurrent signals generated within the device.

6.7.3 APPLICATION NOTES

6.7.3.1 CLP FOR RESISTIVE LOADS

A typical example of where CLP logic may be used is for resistive heating loads such as such as air conditioning systems. Resistive loads typically offer less resistance when cold than when warm, hence the start-up current will be higher.

The settings should be chosen in accordance with the expected load profile. Where it is not necessary to alter the setting of a particular stage, the CLP settings should be set to zero, so that the same overcurrent setting applies during CLP condition.

It may not be necessary to alter the protection settings following a short supply interruption. In this case a suitable ***tcold*** timer setting can be used.

6.7.3.2 CLP FOR MOTOR FEEDERS

In general, a dedicated motor protection device would protect feeders supplying motor loads. However, if CLP logic is available in a feeder device, this may be used to modify the overcurrent settings during start-up.

Depending on the magnitude and duration of the motor starting current, it may be sufficient to simply block operation of instantaneous elements. If the start duration is long, the time-delayed protection settings may also need to be raised. A combination of both blocking and raising of the overcurrent settings may be adopted. The CLP overcurrent settings in this case must be chosen with regard to the motor starting characteristic.

This may be useful where instantaneous earth fault protection needs to be applied to the motor. During motor start-up conditions, it is likely that incorrect operation of the earth fault element would occur due to asymmetric CT saturation. This is due to the high level of starting current causing saturation of one or more of the line CTs feeding the overcurrent/earth fault protection. The resultant transient imbalance in the secondary line current quantities is therefore detected by the residually connected earth fault element. For this reason, it is normal to either apply a nominal time delay to the element, or to use a series stabilising resistor.

The CLP logic may be used to allow reduced operating times or current settings to be applied to the earth fault element under normal running conditions. These settings could then be raised prior to motor starting, by means of the logic.

6.7.3.3 CLP FOR SWITCH ON TO FAULT CONDITIONS

In some feeder applications, fast tripping may be required if a fault is already present on the feeder when it is energised. Such faults may be due to a fault condition not having been removed from the feeder, or due to earthing clamps having been left on following maintenance. In either case, it is desirable to clear the fault condition quickly, rather than waiting for the time delay imposed by IDMT overcurrent protection.

The CLP logic can cater for this situation. Selected overcurrent/earth fault stages could be set to instantaneous operation for a defined period following circuit breaker closure (typically 200 ms). Therefore, instantaneous fault clearance would be achieved for a switch on to fault (SOTF) condition.

6.8 THERMAL OVERLOAD PROTECTION

The heat generated within an item of plant is the resistive loss. The thermal time characteristic is therefore based on the equation I^2Rt. Over-temperature conditions occur when currents in excess of their maximum rating are allowed to flow for a period of time.

Temperature changes during heating follow exponential time constants. The device provides two characteristics for thermal overload protection; a single time constant characteristic and a dual time constant characteristic. These can be selected according to the application.

6.8.1 SINGLE TIME CONSTANT CHARACTERISTIC

This characteristic is used to protect cables, dry type transformers and capacitor banks.

The single constant thermal characteristic is given by the equation:

$$T_{op} = \tau_1 * ln\left[\frac{\left(\frac{I_{phase}}{k * I_{pickup}}\right)^2 - \theta_0}{\left(\frac{I_{phase}}{k * I_{pickup}}\right)^2 - \theta}\right]$$

where:

- T_{op} = time to trip, from thermal capacity from θ_0 to θ following application of the overload current
- θ_0 = initial thermal capacity
- θ = final thermal capacity, Thermal trip set to 100%
- τ_1 = heating and cooling time constant of the protected plant
- I_{phase}/I_{pickup} = ratio of actual phase current and the pickup setting
- κ = overload factor, a constant, settable between 1 and 1.5

6.8.2 DUAL TIME CONSTANT CHARACTERISTIC

This characteristic is used to protect equipment such as oil-filled transformers with natural air cooling. The thermal model is similar to that with the single time constant, except that two time constants must be set.

For marginal overloading, heat will flow from the windings into the bulk of the insulating oil. Therefore, at low current, the replica curve is dominated by the long time constant for the oil. This provides protection against a general rise in oil temperature.

For severe overloading, heat accumulates in the transformer windings, with little opportunity for dissipation into the surrounding insulating oil. Therefore at high current levels, the replica curve is dominated by the short time constant for the windings. This provides protection against hot spots developing within the transformer windings.

Overall, the dual time constant characteristic serves to protect the winding insulation from ageing and to minimise gas production by overheated oil. Note however that the thermal model does not compensate for the effects of ambient temperature change.

The dual time constant thermal characteristic is given by the equation:

$$0.4 * e^{-\frac{t-t_0}{\tau_1}} + 0.6 * e^{-\frac{t-t_0}{\tau_2}} = \left[\frac{\left(\frac{I_{phase}}{k * I_{pickup}}\right)^2 - \theta}{\left(\frac{I_{phase}}{k * I_{pickup}}\right)^2 - \theta_0}\right]$$

where:

- τ_1 = heating and cooling time constant of the transformer windings
- τ_2 = heating and cooling time constant of the insulating oil

6.8.3 THERMAL OVERLOAD PROTECTION IMPLEMENTATION

The device incorporates a current-based thermal characteristic, using RMS load current to model heating and cooling of the protected plant. The element can be set with both alarm and trip stages.

Thermal Overload Protection is implemented under ***SETPOINTS\PROTECTION\GROUP [1-6]\CURRENT PROT. \THERMAL OVERLOAD\THERMAL O/L 1***

This contains the settings for the characteristic type, the alarm and trip thresholds and the time constants.

6.8.4 THERMAL OVERLOAD PROTECTION LOGIC

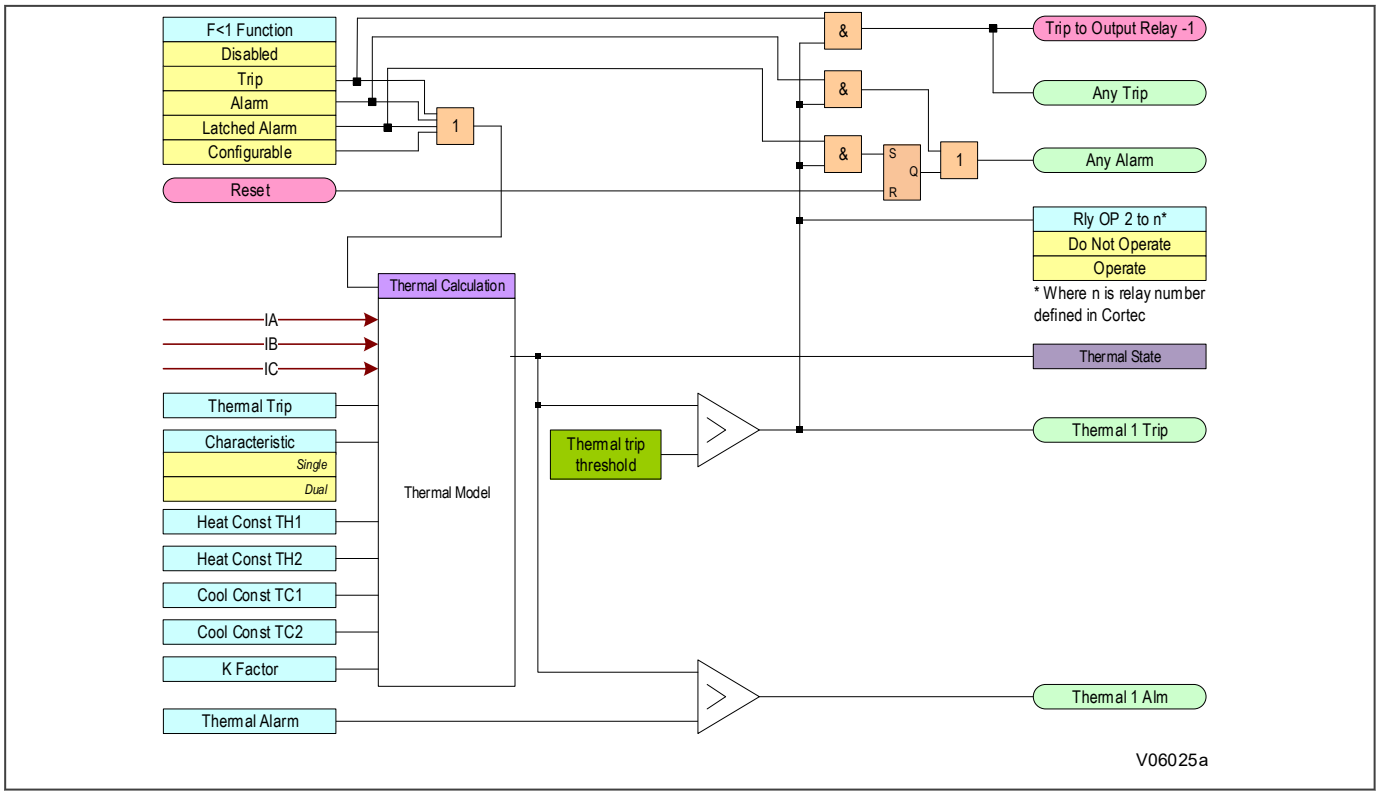

Figure 39: Thermal overload protection logic

Three phase input currents are taken as the input to the thermal overload function. If this current exceeds the thermal trip threshold setting a start condition is asserted.

The Start signal is applied to the chosen thermal characteristic module, which has three outputs signals; alarm trip and thermal state measurement.

The thermal state can be reset under the clear records menu.

6.8.5 APPLICATION NOTES

6.8.5.1 SETTING GUIDELINES FOR DUAL TIME CONSTANT CHARACTERISTIC

The easiest way of solving the dual time constant thermal equation is to express the current in terms of time and to use a spreadsheet to calculate the current for a series of increasing operating times using the following equation, then plotting a graph.

$$I = \sqrt{\frac{0.4I_p^{\ 2}.e^{(-t/\tau 1)} + 0.6I_p^{\ 2}.e^{(-t/\tau 2)} - k^2.I_{FLC}^{\ 2}}{0.4e^{(-t/\tau 1)} + 0.6e^{(-t/\tau 2)} - 1}}$$

	A	B	C	D	E	F
1						
2	**Time constant 1 =**		**300**	seconds		
3	**Time constant 2 =**		**7200**	seconds		
4	**Pre-overload current Ip =**		**0.9**	per unit		
5	**Full load current =**		**1**	Amps		
6						
7	**OP Time (t)**	**Overload current (I)**				
8	1	14.40852032				
9	1.5	11.7805774				
10	2	10.21617905				
11	2.5	9.150045407				
12	3	8.364131776				
13	3.5	7.754150044				
14	4	7.263123888				
15	4.5	6.856949012				

Figures based on equation

E00728

Figure 40: Spreadsheet calculation for dual time constant thermal characteristic

Note:
K factor = 1.05 in the above figure.

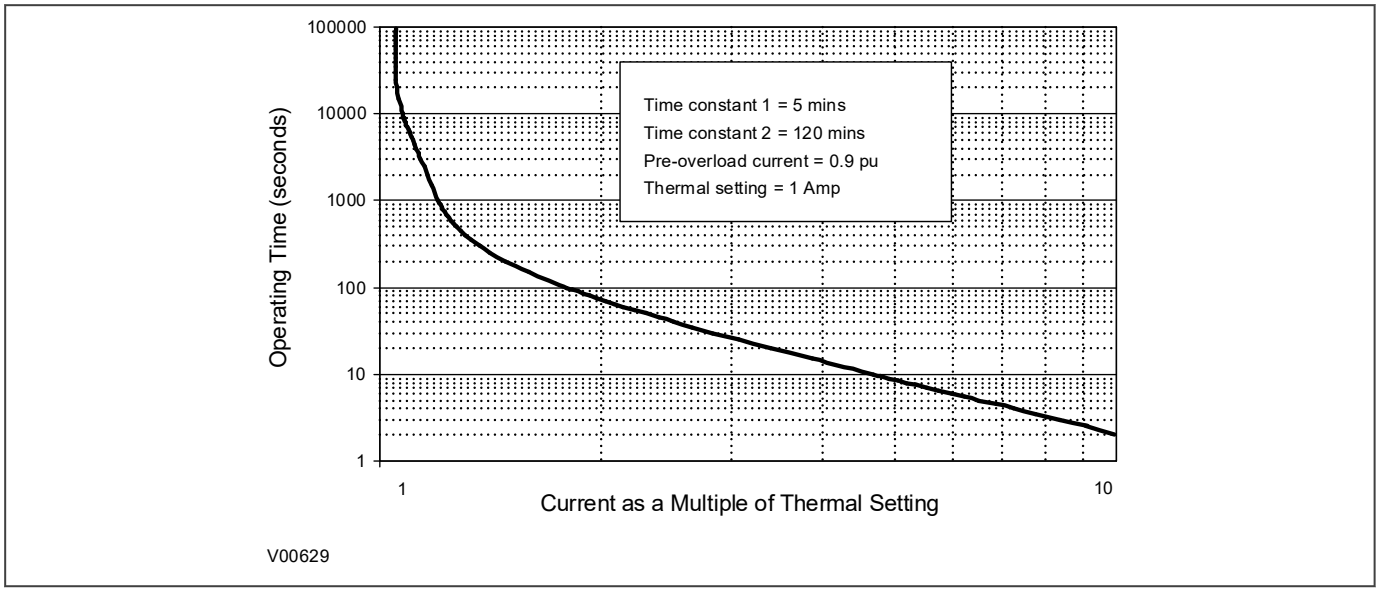

Figure 41: Dual time constant thermal characteristic

The current setting is calculated as:

Thermal Trip = Permissible continuous loading of the transformer item/CT ratio.

For an oil-filled transformer with rating 400 to 1600 kVA, the approximate time constants are:

- τ_1 = 5 minutes
- τ_2 = 120 minutes

An alarm can be raised on reaching a thermal state corresponding to a percentage of the trip threshold. A typical setting might be "Thermal Alarm" = 70% of thermal capacity.

> *Note:*
> *The thermal time constants given in the above tables are typical only. Reference should always be made to the plant manufacturer for accurate information.*

6.8.5.2 SETTING GUIDELINES FOR SINGLE TIME CONSTANT CHARACTERISTIC

The time to trip varies depending on the load current carried before application of the overload, i.e. whether the overload was applied from hot or cold.

The thermal time constant characteristic may be rewritten as:

$$e^{(-t/\tau)} = {}_{e}\left[\frac{\theta - \theta_p}{\theta - 1}\right]$$

where:

- θ = thermal state = $I^2/K^2I_{FLC}^2$
- θ_p = pre-fault thermal state = $I_p^2/K^2I_{FLC}^2$
- I_p is the pre-fault thermal state
- I_{FLC} is the full load current

Note:
A current of 105%Is (KI_{FLC}) has to be applied for several time constants to cause a thermal state measurement of 100%.

The current setting is calculated as:

Thermal Trip = Permissible continuous loading of the plant item/CT ratio.

The following tables show the approximate time constant in minutes, for different cable rated voltages with various conductor cross-sectional areas, and other plant equipment.

Area mm^2	6 - 11 kV	22 kV	33 kV	66 kV
25 - 50	10 minutes	15 minutes	40 minutes	–
70 - 120	15 minutes	25 minutes	40 minutes	60 minutes
150	25 minutes	40 minutes	40 minutes	60 minutes
185	25 minutes	40 minutes	60 minutes	60 minutes
240	40 minutes	40 minutes	60 minutes	60 minutes
300	40 minutes	60 minutes	60 minutes	90 minutes

Plant Type	Time Constant (Minutes)
Dry-type transformer <400 kVA	40
Dry-type transformers 400 – 800 kVA	60 - 90
Air-core reactors	40
Capacitor banks	10
Overhead lines with cross section > 100 mm^2	10
Overhead lines	10
Busbars	60

6.9 BROKEN CONDUCTOR PROTECTION

One type of unbalanced fault is the 'Series' or 'Open Circuit' fault. This type of fault can arise from, among other things, broken conductors. Series faults do not cause an increase in phase current and so cannot be detected by overcurrent protection. However, they do produce an imbalance, resulting in negative phase sequence current, which can be detected.

It is possible to apply a negative phase sequence overcurrent element to detect broken conductors. However, on a lightly loaded line, the negative sequence current resulting from a series fault condition may be very close to, or less than, the full load steady state imbalance arising from CT errors and load imbalances, making it very difficult to distinguish. A regular negative sequence element would therefore not work at low load levels. To overcome this, the device incorporates a special Broken Conductor protection element.

The ***Broken Conductor*** element measures the ratio of negative to positive phase sequence current (I2/I1). This ratio is approximately constant with variations in load current, therefore making it more sensitive to series faults than standard negative sequence protection.

6.9.1 BROKEN CONDUCTOR PROTECTION IMPLEMENTATION

Broken Conductor protection is implemented under the ***SETPOINTS\PROTECTION\GROUP [1-6]\CURRENT PROT.\BROKEN CONDUCTOR\BROKENCONDUCTOR1***

The ***Broken Conductor*** feature contains the settings to enable the function, for the pickup threshold and the time delay.

6.9.2 BROKEN CONDUCTOR PROTECTION LOGIC

This function will detect a line broken conductor condition or a single-pole breaker malfunction condition through checking the phase current input phasors and the I2/I1 ratio. In normal and balanced load situations this ratio is zero, while in severe load fault conditions an unbalance is produced and this ratio increases. The intention of this function is to detect only single-phase broken conductors. Two phase or three-phase broken conductors will not be detected.

To distinguish between single-phase disappearance and system disturbance in all three phases (such as load change, switching, etc.), the broken conductor element monitors the change in all three phase currents at the present instance and at four cycles previous. It also monitors changes in the I2/I1 ratio, I1 minimum, and I1 maximum.

This function should not be used to respond to fault transients and single-pole tripping/reclosing conditions. The time delay should therefore be programmed to a sufficient length to ensure coordination with the breaker dead time of the recloser function.

`Bkn Line 1 Start` will be high when the I2/I1 ratio of the current bank is above the threshold value, the positive current is in a range of nominal, and phase current changes. The broken conductor Trip flag is asserted if the element stays picked up for the time defined by the time delay. The element instantaneously resets without operation if the I2/I1 ratio decreases to between 96% and 99% of the threshold set before the time for operation is reached.

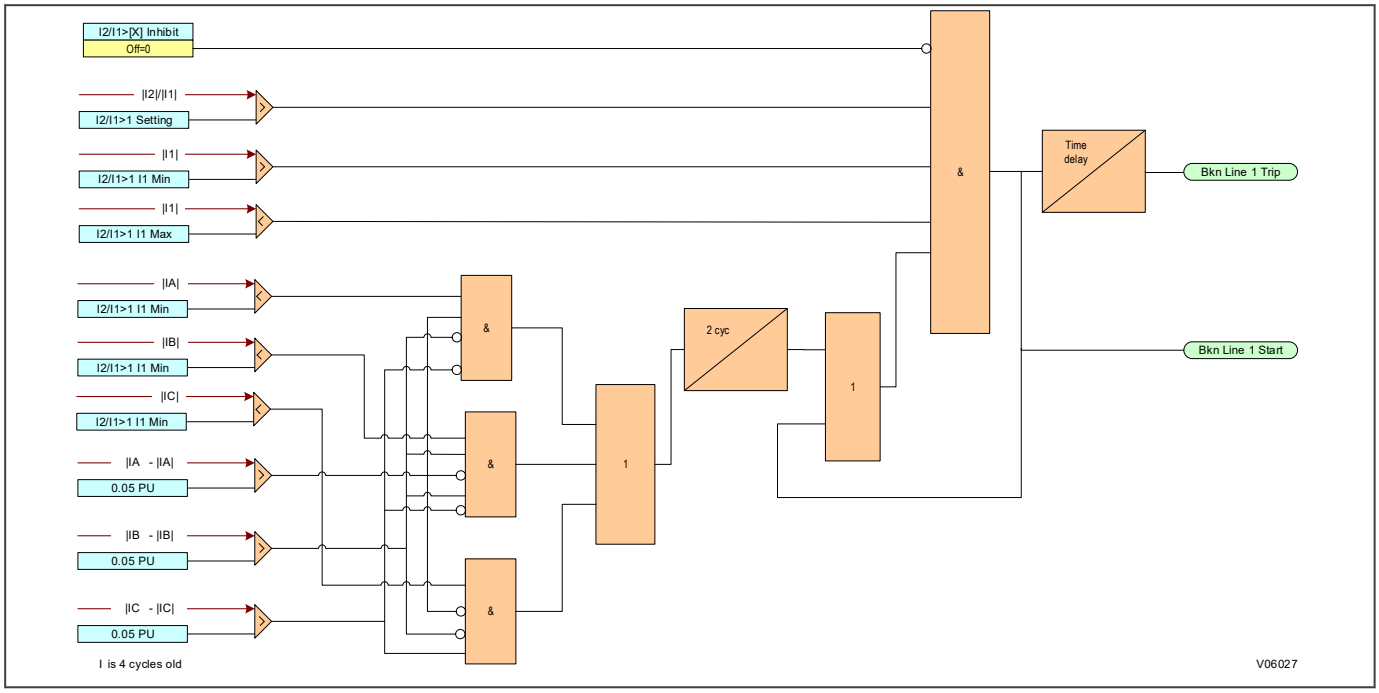

Figure 42: Broken conductor logic

6.9.3 APPLICATION NOTES

6.9.3.1 SETTING GUIDELINES

For a broken conductor affecting a single point earthed power system, there will be little zero sequence current flow and the ratio of I_2/I_1 that flows in the protected circuit will approach 100%. In the case of a multiple earthed power system (assuming equal impedance's in each sequence network), the ratio I_2/I_1 will be 50%.

In practise, the levels of standing negative phase sequence current present on the system govern this minimum setting. This can be determined from a system study, or by making use of the measurement facilities at the commissioning stage. If the latter method is adopted, it is important to take the measurements during maximum system load conditions, to ensure that all single-phase loads are accounted for.

Since sensitive settings have been employed, we can expect that the element will operate for any unbalanced condition occurring on the system (for example, during a single pole autoreclose cycle). For this reason, a long time delay is necessary to ensure co-ordination with other protection devices. A 60 second time delay setting may be typical.

The following example was recorded by an IED during commissioning:

$$I_{full\ load} = 500A$$

$$I_2 = 50A$$

therefore the quiescent I_2/I_1 ratio = 0.1

To allow for tolerances and load variations a setting of 20% of this value may be typical: Therefore set:

$$I_2/I_1 = 0.2$$

In a double circuit (parallel line) application, using a 40% setting will ensure that the broken conductor protection will operate only for the circuit that is affected. A setting of 0.4 results in no pickup for the parallel healthy circuit.

Set I_2/I_1 Time Delay = 60 s to allow adequate time for short circuit fault clearance by time delayed protections.

6.10 BLOCKED OVERCURRENT PROTECTION

With Blocked Overcurrent schemes, the start contacts from downstream IEDs are connected to the blocking inputs of upstream IEDs. This allows identical current and time settings to be used on each of the IEDs in the scheme, as the device nearest to the fault does not receive a blocking signal and so trips discriminatively. This type of scheme therefore reduces the number of required grading stages, and consequently fault clearance times.

The principle of Blocked Overcurrent protection may be extended by setting fast-acting overcurrent elements on the incoming feeders to a substation, which are then arranged to be blocked by start contacts from the devices protecting the outgoing feeders. The fast-acting element is thus allowed to trip for a fault condition on the busbar, but is stable for external feeder faults due to the blocking signal.

This type of scheme provides much reduced fault clearance times for busbar faults than would be the case with conventional time-graded overcurrent protection. The availability of multiple overcurrent and earth fault stages in GE Vernova's IEDs allows additional time-graded overcurrent protection for back-up purposes.

6.10.1 BLOCKED OVERCURRENT IMPLEMENTATION

Blocked Overcurrent schemes can be implemented using the IEDs settings or the Flexlogic Equation Editor. The start outputs, available from each stage of the overcurrent and earth fault elements (including the sensitive earth fault element) can be mapped to output relay contacts. These outputs can then be connected to the relevant block inputs of the upstream IEDs via opto-inputs.

6.10.2 APPLICATION NOTES

6.10.2.1 BUSBAR BLOCKING SCHEME

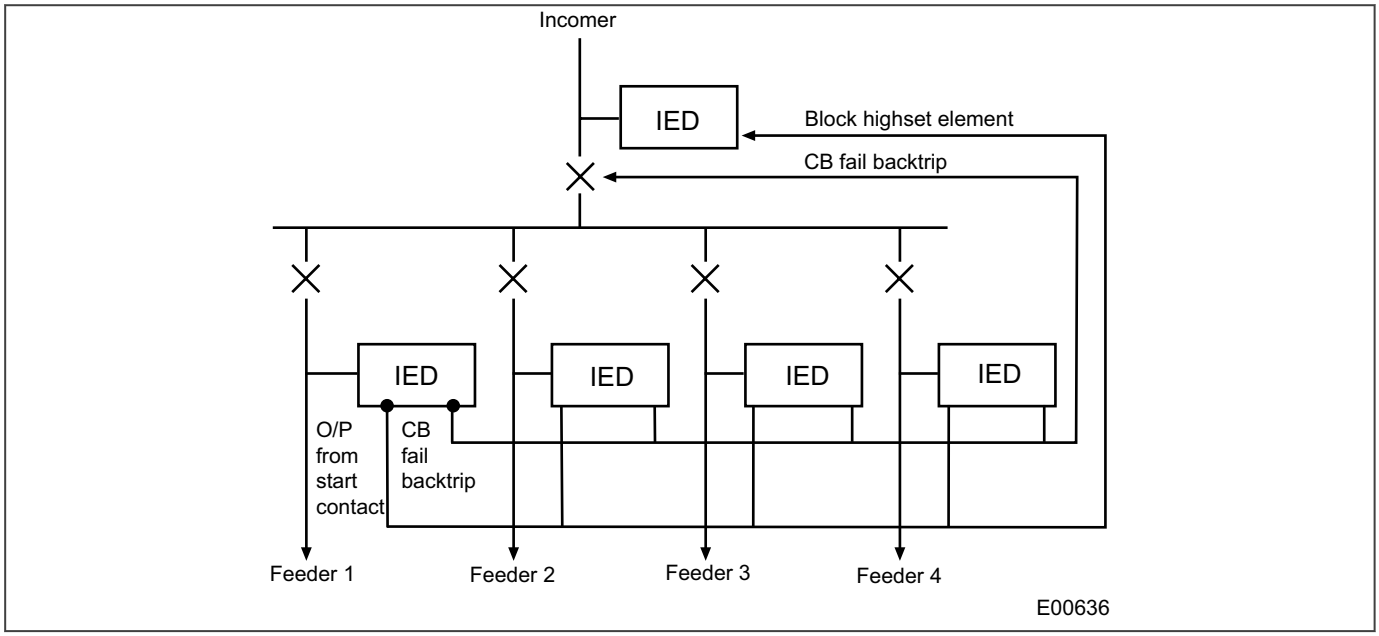

Figure 43: Simple busbar blocking scheme

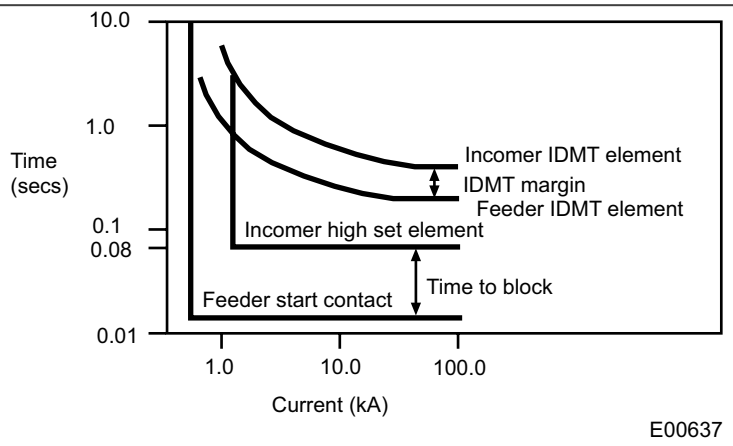

Figure 44: Simple busbar blocking scheme characteristics

For further guidance on the use of blocked busbar schemes, refer to GE Vernova.

6.11 SOTF PROTECTION

Switch on to fault protection (SOTF) is provided for high speed clearance of any detected fault immediately following manual closure or closure after a long open time of the circuit breaker. Without SOTF, there is a risk that if the breaker is closed onto close-in three-phase fault, the measured voltages may be too small for the impedance zones or the directional overcurrent stages to operate reliably.

6.11.1 SOTF IMPLEMENTATION

SOTF Protection is configured under the path ***SETPOINTS\PROTECTION\GROUP [1-6]\CURRENT PROT.\SOTF \SOTF 1***.

6.11.2 SOTF LOGIC

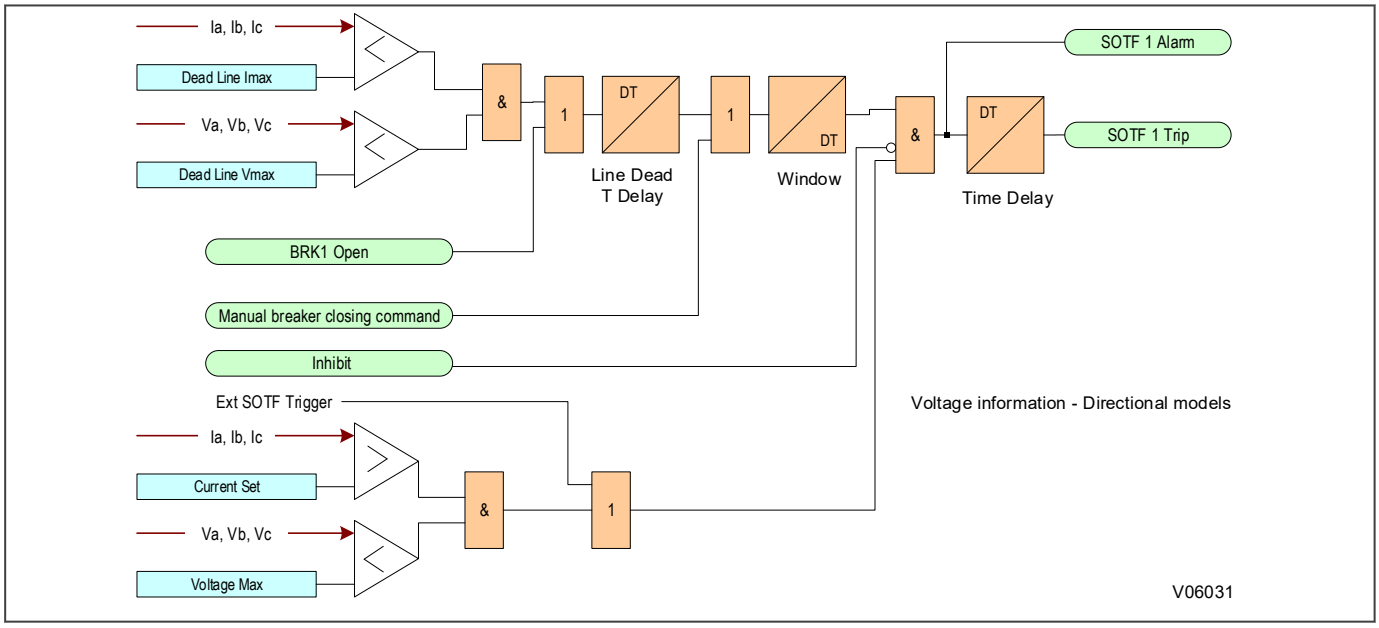

Figure 45: SOTF logic

Note:
This applies to the P14D only.

6.12 UNDERCURRENT PROTECTION

The IED provides one *UNDERCURRENT* element per protection group. The element responds to a per-phase current. An alarm will occur if the magnitude of any phase current falls below the undercurrent alarm pickup level for the time specified by the undercurrent alarm delay. Furthermore, a trip will occur if the magnitude of any phase current falls below the undercurrent trip pickup level for the time specified by the undercurrent trip delay. The alarm and trip pickup levels should be set lower than the lowest feeder loading during normal operations.

Undercurrent requires breaker ‘close’ status to active the element. In addition, the Undercurrent element can be blocked upon the closing of the feeder breaker for a period of time defined by the setting Start Block Delay. This block may be used in applications when load requires time to build up to a certain operating level before the undercurrent element trips or alarms.

6.12.1 UNDERCURRENT IMPLEMENTATION

Undercurrent Protection is configured under the path ***SETPOINTS\PROTECTION\GROUP [1-6]\CURRENT PROT. \UNDERCURRENT\UNDERCURRENT 1***.

6.12.2 UNDERCURRENT LOGIC

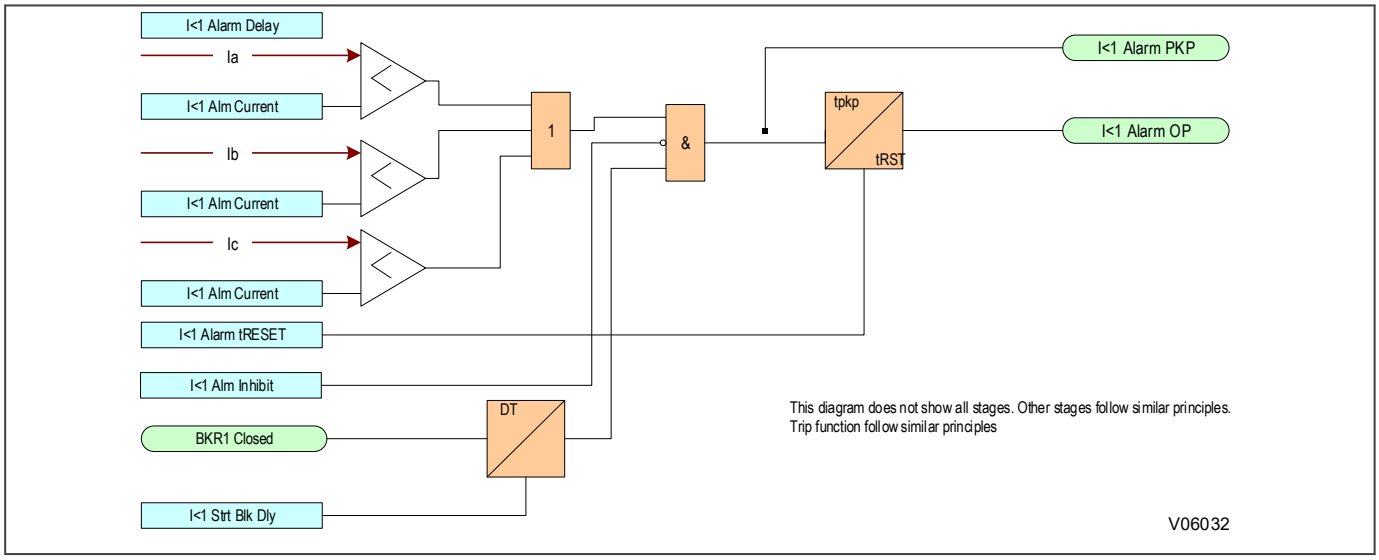

Figure 46: Undercurrent logic

6.13 LOAD BLINDER

The [product] relay provides one Load Encroachment element per protection group.

The load encroachment element responds to the positive-sequence voltage and current, and applies a characteristic shown in the figure below:

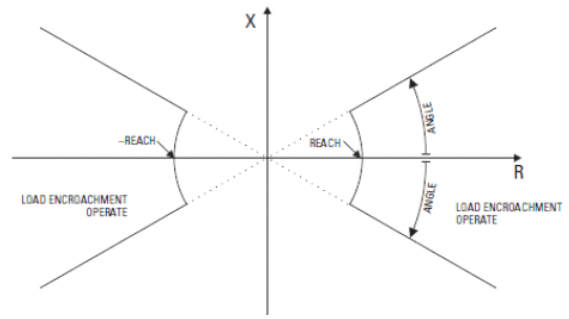

Figure 47: Load encroachment characteristic

The element operates if the positive-sequence voltage is above a set level, and asserts its output signal so that it can be used to block selected protection elements such as Phase Overcurrent.

6.13.1 LOAD BLINDER IMPLEMENTATION

Depending on the mode selection using setting ***Blinder Mode***, the Load Blinder responds to either positive sequence impedance (Z1) or single-phase impedance (Z). If ***Blinder Mode*** setting is selected as 3ph (based on Z1), positive sequence impedance (Z1) is calculated from positive sequence voltage (V1) and positive sequence current (I1). When ***Blinder Mode*** setting is selected as 1ph (based on Z), per phase impedance (Z) is calculated using phase voltages (Va, Vb, Vc) and phase current (Ia, Ib, Ic).

The element operates when:

- The impedance is inside the Load Blinder operating area. The operating area is defined by forward reach and reverse reach using settings ***Fwd Z Impedance/Angle*** and ***Rev Z Impedance/Angle***, respectively.
- And the positive sequence voltage is above the minimum operating value programmed as ***Blinder V<Block***.
- And negative sequence current is below the maximum threshold programmed as ***Blinder I2>Block*** setting.

The Load Blinder Trip flag is asserted if the element stays picked up for the time defined by the ***Time Delay*** setting.

Load Blinder can be inhibited by a blocking input using setting ***Inhibit***.

6.13.2 LOAD BLINDER LOGIC

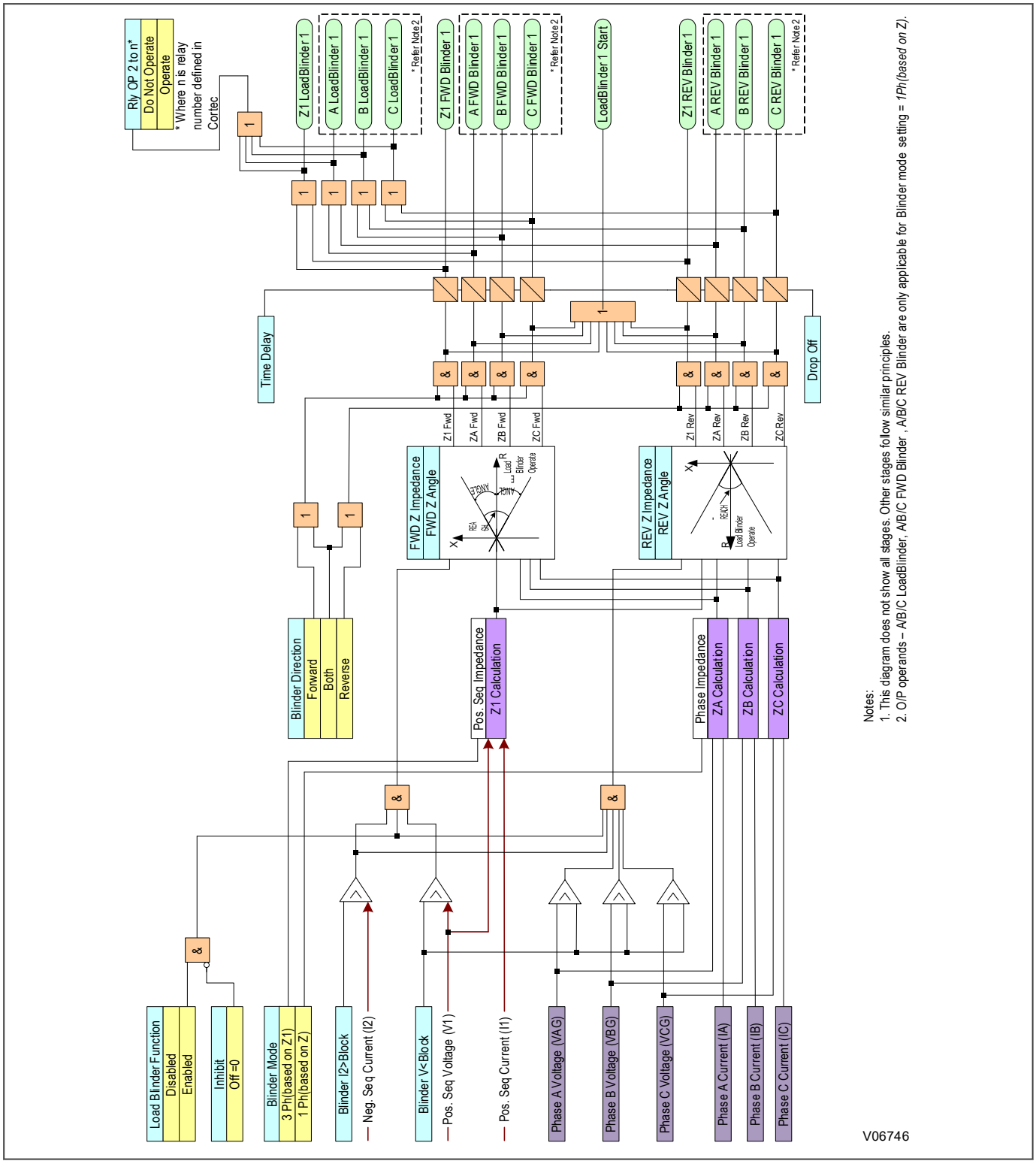

Figure 48: Load blinder logic

6.13.2.1 LOAD BLINDER SETTING GUIDELINES

Using setting ***Blinder Direction***, the load blinder reach direction can be programmed to reverse, forward or both. The forward and reverse reaches are defined using the settings ***Fwd Z Impedance/Angle*** and ***Rev Z Impedance/ Angle***, respectively.

The reach settings, ***Fwd Z Impedance*** and ***Rev Z Impedance***, specify the resistive reach of the element as shown in the Load Blinder characteristic diagram. These settings should be entered in secondary ohms and be calculated as the positive-sequence resistance seen by the relay under maximum load conditions and unity power factor.

Fwd Z Angle and ***Rev Z Angle*** settings specify the size of the blocking region as shown on the Load Blinder characteristic diagram and applies this to the positive-sequence impedance.

Blinder V<Block setting sets the minimum operating positive-sequence voltage/phase voltage required for operation of the Load Blinder element. If this voltage is below the set minimum threshold, the element will not operate. If 3-phase VT is delta connected, the true supervision level would be internally changed to

$1/\sqrt{3}$

of the user setting since the base of VT here is the phase-phase voltage.

Blinder I2>Block setting sets the Negative Phase Sequence current threshold for the Load Blinder function.

The Time Delay provides definite time pickup delay. It should be noted that in order to prevent erroneous tripping, the pickup time delay programmed in the overcurrent elements (or the other elements) that are blocked by the Load Blinder must be longer than the Time Delay programmed in the Load Blinder function.

CHAPTER 7

RESTRICTED EARTH FAULT PROTECTION

7.1 CHAPTER OVERVIEW

The device provides extensive Restricted Earth Fault functionality. This chapter describes the operation of this function including the principles of operation, logic diagrams and applications.

This chapter contains the following sections:

Chapter Overview 132

REF Protection Principles 133

Restricted Earth Fault Protection Implementation 139

Application Notes 142

7.2 REF PROTECTION PRINCIPLES

Winding-to-core faults in a transformer can be caused by insulation breakdown. Such faults can have very low fault currents, but they still need to be picked up. If such faults are not identified, this could result in extreme damage to very expensive equipment.

Often the associated fault currents are lower than the nominal load current. Neither overcurrent nor percentage differential protection is sufficiently sensitive in this case. We therefore require a different type of protection arrangement. Not only should the protection arrangement be sensitive, but it must create a protection zone, which is limited to each transformer winding. Restricted Earth Fault protection (REF) is the protection mechanism used to protect individual transformer winding sets.

The following figure shows a REF protection arrangement for protecting the delta side of a delta-star transformer.

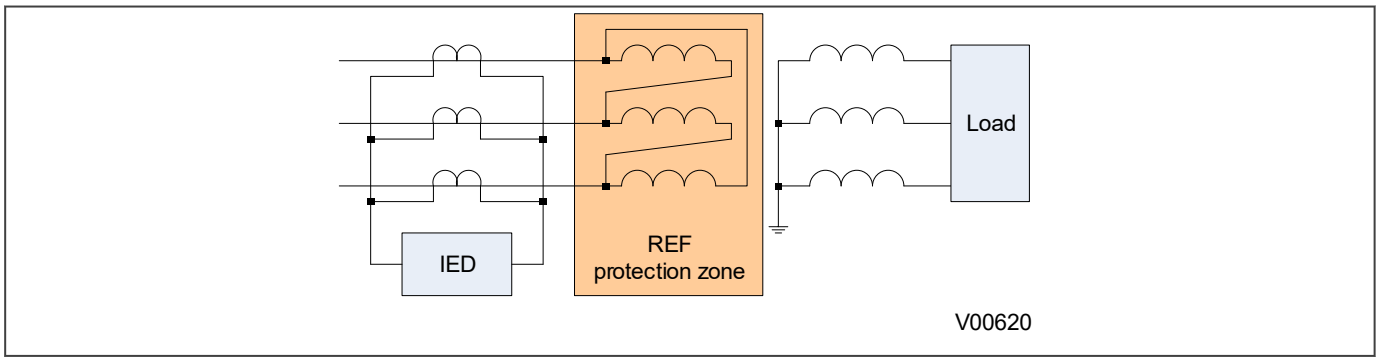

Figure 49: REF protection for delta side

The current transformers measuring the currents in each phase are connected in parallel. The currents from all three phases are summed to form a differential current, sometimes known as a spill current. Under normal operating conditions the currents of the three phases add up to zero resulting in zero spill current. A fault on the star side will also not result in a spill current, as the fault current would simply circulate in the delta windings. However, if any of the three delta windings were to develop a fault, the impedance of the faulty winding would change and that would result in a mismatch between the phase currents, resulting in a spill current. If the spill current is large enough, it will trigger a trip command.

The following figure shows a REF protection arrangement for the star side of a delta-star transformer.

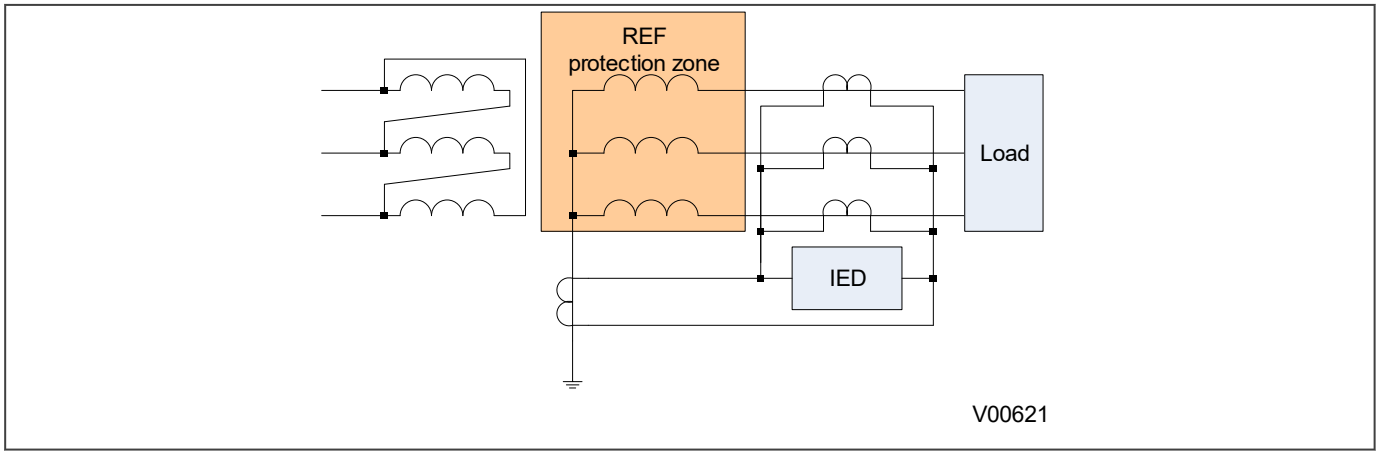

Figure 50: REF protection for star side

Here we have a similar arrangement of current transformers connected in parallel. The difference is that we need to measure the zero sequence current in the neutral line as well. An external unbalanced fault causes zero sequence current to flow through the neutral line, resulting in uneven currents in the phases, which could cause the protection to maloperate. By measuring this zero sequence current and placing it in parallel with the other three, the currents

are balanced, resulting in stable operation. Now only a fault inside the star winding can create an imbalance sufficient to cause a trip.

7.2.1 RESISTANCE-EARTHED STAR WINDINGS

Most distribution systems use resistance-earthed systems to limit the fault current. Consider the diagram below, which depicts an earth fault on the star winding of a resistance-earthed Dyn transformer (Dyn = Delta-Star with star-point neutral connection).

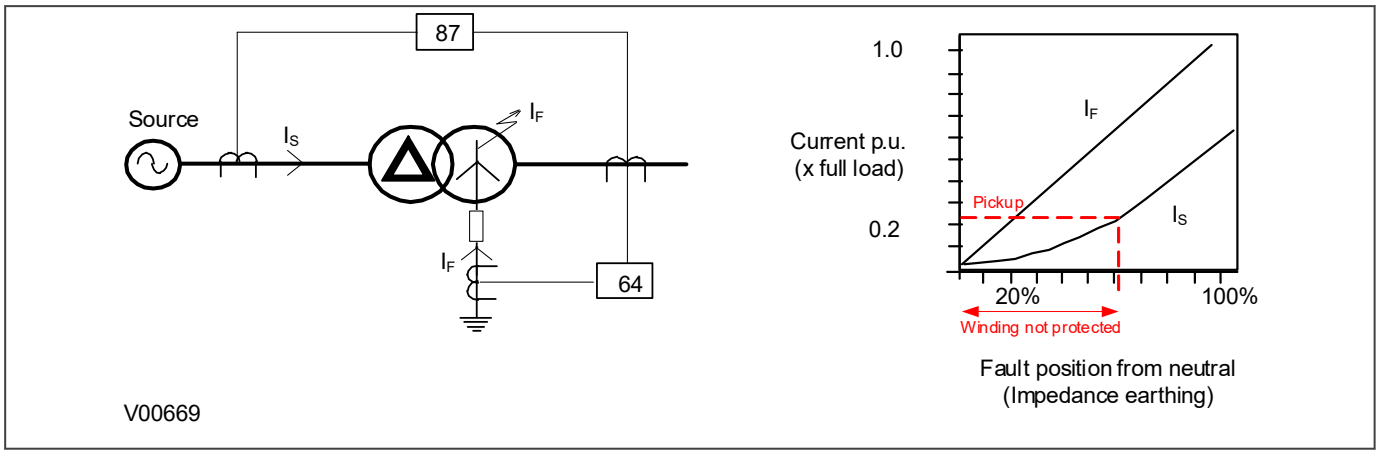

Figure 51: REF protection for resistance-earthed systems

The value of fault current (I_F) depends on two factors:

- The value of earthing resistance (which makes the fault path impedance negligible)
- The fault point voltage (which is governed by the fault location)

Because the fault current (I_F) is governed by the resistance, its value is directly proportional to the location of the fault.

A restricted earth fault element is connected to measure I_F directly. This provides very sensitive earth fault protection. The overall differential protection is less sensitive, since it only measures the HV current I_S. The value of I_S is limited by the number of faulty secondary turns in relation to the HV turns.

7.2.2 SOLIDLY-EARTHED STAR WINDINGS

Most transmission systems use solidly-earthed systems. Consider the diagram below, which depicts an earth fault on the star winding of a solidly-earthed Dyn transformer.

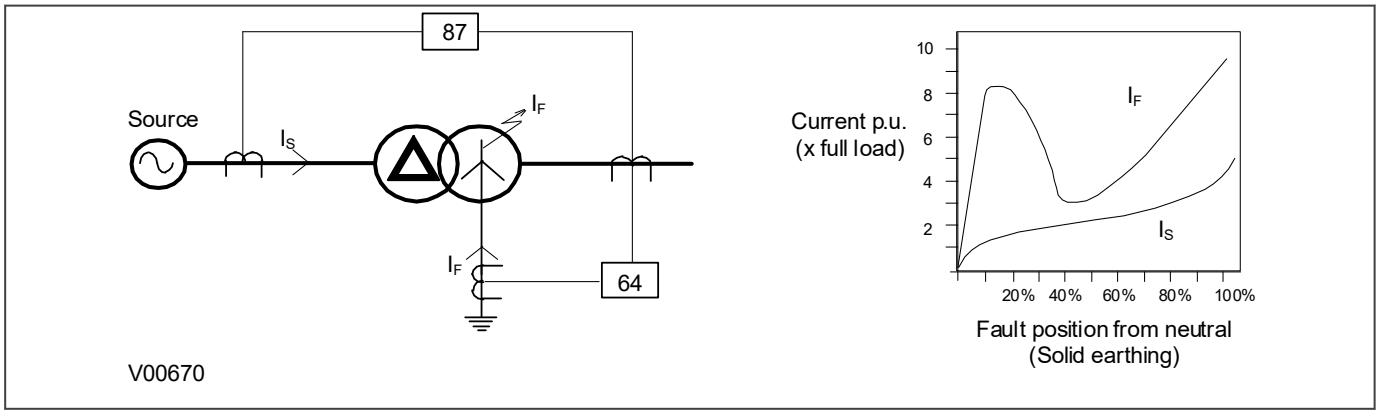

Figure 52: REF protection for solidly earthed system

In this case, the fault current I_F is dependent on:

- The leakage reactance of the winding
- The impedance in the fault path
- The fault point voltage (which is governed by the fault location)

In this case, the value of fault current (I_F) varies with the fault location in a complex manner.

A restricted earth fault element is connected to measure I_F directly. This provides very sensitive earth fault protection.

For solidly earthed systems, the operating current for the transformer differential protection is still significant for faults over most of the winding. For this reason, independent REF protection may not have been previously considered, especially where an additional device would have been needed. But with this product, it can be applied without extra cost.

7.2.3 THROUGH FAULT STABILITY

In an ideal world, the CTs either side of a differentially protected system would be identical with identical characteristics to avoid creating a differential current. However, in reality CTs can never be identical, therefore a certain amount of differential current is inevitable. As the through-fault current in the primary increases, the discrepancies introduced by imperfectly matched CTs is magnified, causing the differential current to build up. Eventually, the value of the differential current reaches the pickup current threshold, causing the protection element to trip. In such cases, the differential scheme is said to have lost stability. To specify a differential scheme's ability to restrain from tripping on external faults, we define a parameter called 'through-fault stability limit', which is the maximum through-fault current a system can handle without losing stability.

7.2.4 RESTRICTED EARTH FAULT TYPES

There are two different types of Restricted Earth Fault; Low Impedance REF (also known as Biased REF) and High Impedance REF. Each method compensates for the effect of through-fault errors in a different manner.

With Low Impedance REF, the through-fault current is measured and this is used to alter the sensitivity of the REF element accordingly by applying a bias characteristic. So the higher the through fault current, the higher the differential current must be for the device to issue a trip signal, Often a transient bias component is added to improve stability during external faults.

Low impedance protection used to be considered less secure than high impedance protection. This is no longer true as numerical IEDs apply sophisticated algorithms to match the performance of high-impedance schemes. Some advantages of using Low Impedance REF are listed below:

- There is no need for dedicated CTs. As a result CT cost is substantially reduced
- The wiring is simpler as it does not require an external resistor or Metrosil
- Common phase current inputs can be used
- It provides internal CT ratio mismatch compensation. It can match CT ratios up to 1:40 resulting flexibility in substation design and reduced cost
- Advanced algorithms make the protection secure

With High Impedance REF, there is no bias characteristic, and the trip threshold is set to a constant level. However, the High Impedance differential technique ensures that the impedance of the circuit is sufficiently high such that the differential voltage under external fault conditions is lower than the voltage needed to drive differential current through the device. This ensures stability against external fault conditions so the device will operate only for faults occurring inside the protected zone.

High Impedance REF protection responds to a voltage across the differential junction points. During external faults, even with severe saturation of some of the CTs, the voltage does not rise above certain level, because the other

CTs will provide a lower-impedance path compared with the device input impedance. The principle has been used for more than half a century. Some advantages of using High Impedance REF are listed below:

- It provides a simple proven algorithm, which is fast, robust and secure
- It is less sensitive to CT saturation

7.2.4.1 LOW IMPEDANCE REF PRINCIPLE

Low Impedance REF can be used for either delta windings or star windings in both solidly grounded and resistance grounded systems. The connection to a modern IED is as follows:

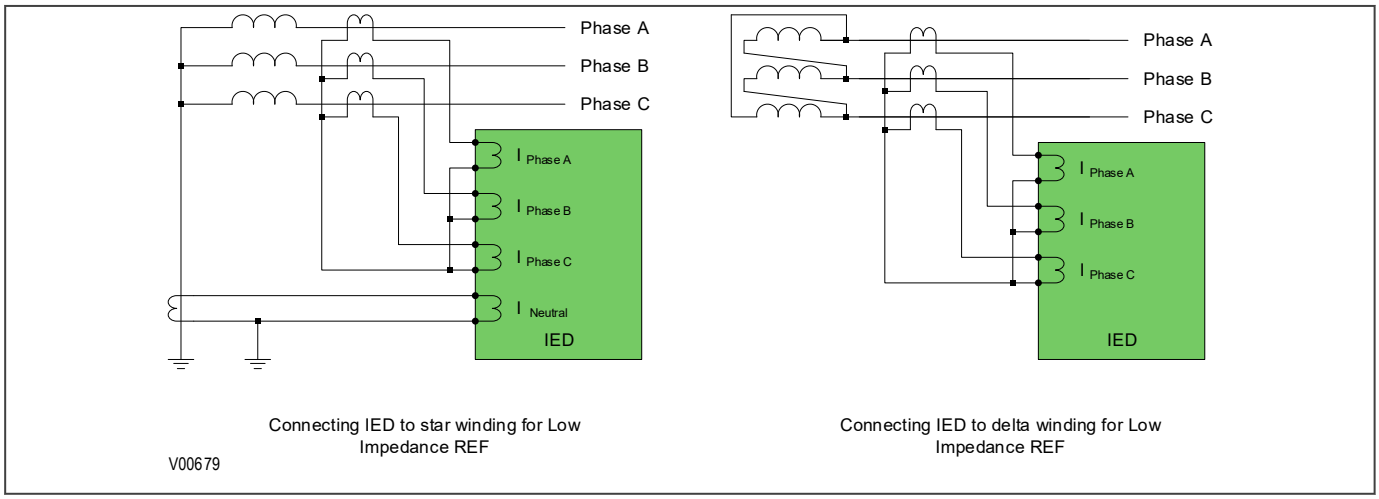

Figure 53: Low impedance REF connection

7.2.4.1.1 LOW IMPEDANCE BIAS CHARACTERISTIC

Usually, a triple slope biased characteristic is used as follows:

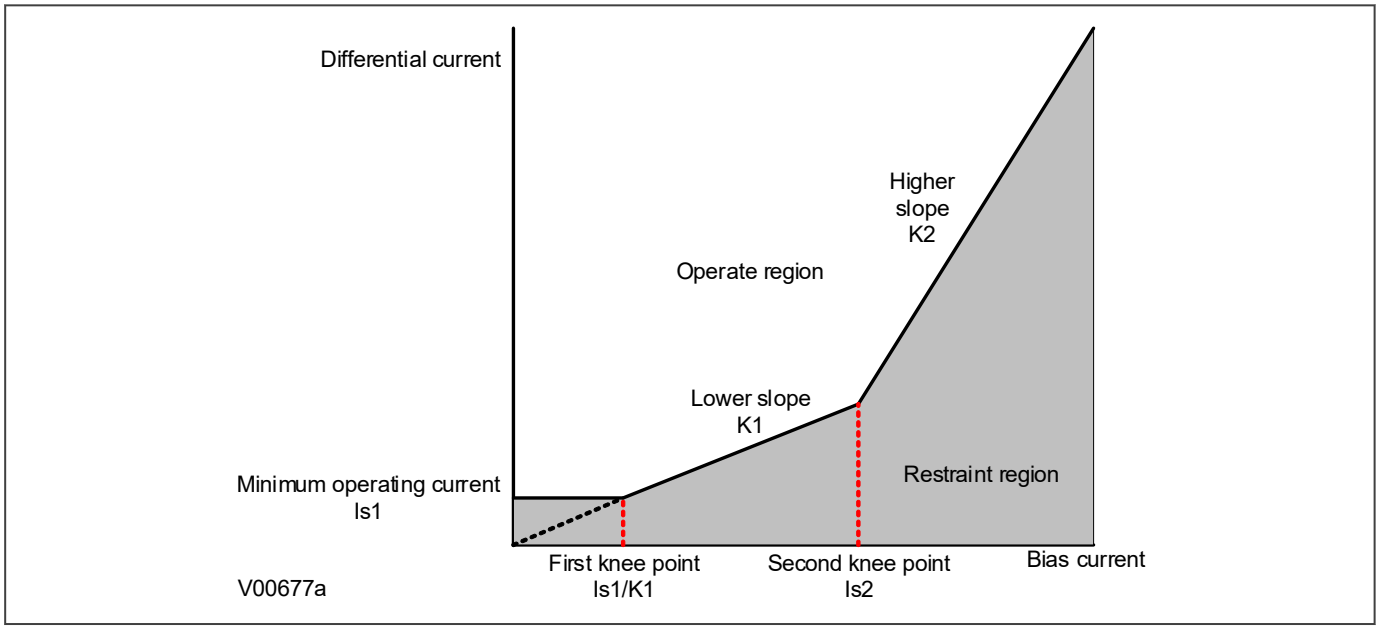

Figure 54: Three-slope REF bias characteristic

The flat area of the characteristic is the minimum differential current required to cause a trip (operate current) at low bias currents. From the first kneepoint onwards, the operate current increases linearly with bias current, as shown by the lower slope on the characteristic. This lower slope provides sensitivity for internal faults. From the second

knee point onwards, the operate current further increases linearly with bias current, but at a higher rate. The second slope provides stability under through fault conditions.

> *Note:*
> *In Restricted Earth Fault applications, Bias Current Compensation is also known as Low Impedance REF.*

7.2.4.2 HIGH IMPEDANCE REF PRINCIPLE

This scheme is very sensitive and can protect against low levels of fault current, typical of winding faults.

High Impedance REF protection is based on the differential principle. It works on the circulating current principle as shown in the following diagram.

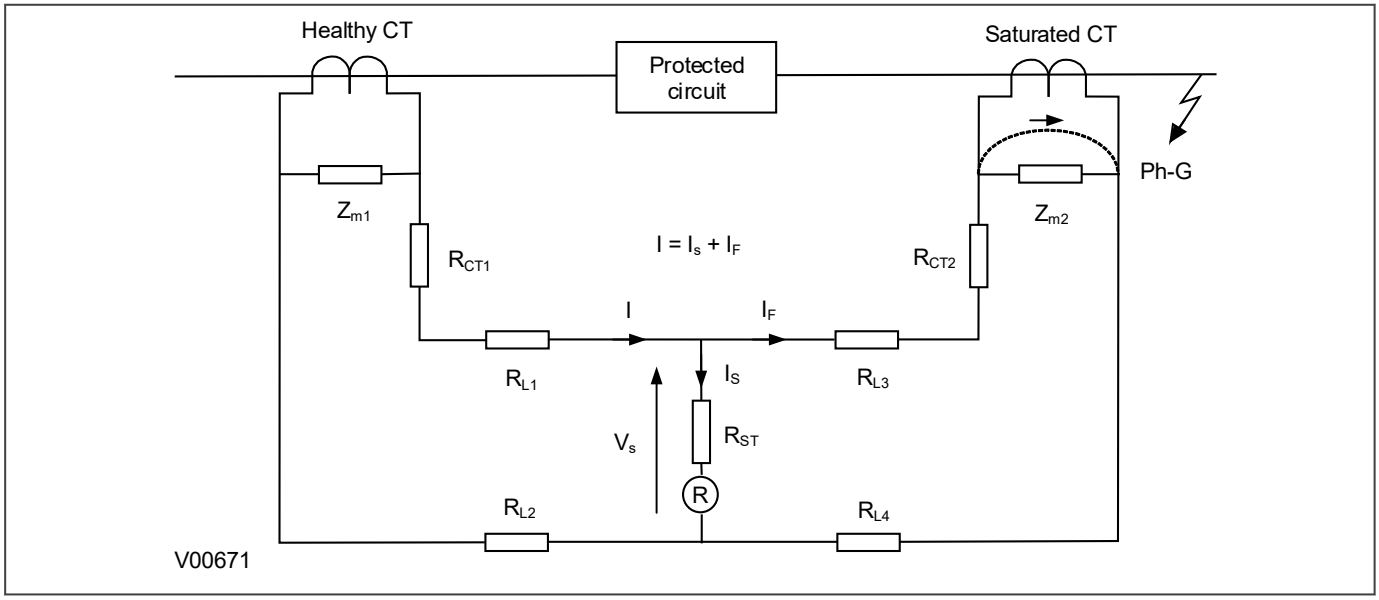

Figure 55: High impedance REF principle

When subjected to heavy through faults the line current transformer may enter saturation unevenly, resulting in imbalance. To ensure stability under these conditions a series connected external resistor is required, so that most of the unbalanced current will flow through the saturated CT. As a result, the current flowing through the device will be less than the setting, therefore maintaining stability during external faults.

Voltage across REF element $V_s = I_F (R_{CT2} + R_{L3} + R_{L4})$

Stabilising resistor $R_{ST} = V_s/I_s - R_R$

where:

- I_F = maximum secondary through fault current
- R_R = device burden
- R_{CT} = CT secondary winding resistance
- R_{L2} and R_{L3} = Resistances of leads from the device to the current transformer
- R_{ST} = Stabilising resistor

High Impedance REF can be used for either delta windings or star windings in both solidly grounded and resistance grounded systems. The connection to a modern IED are as follows:

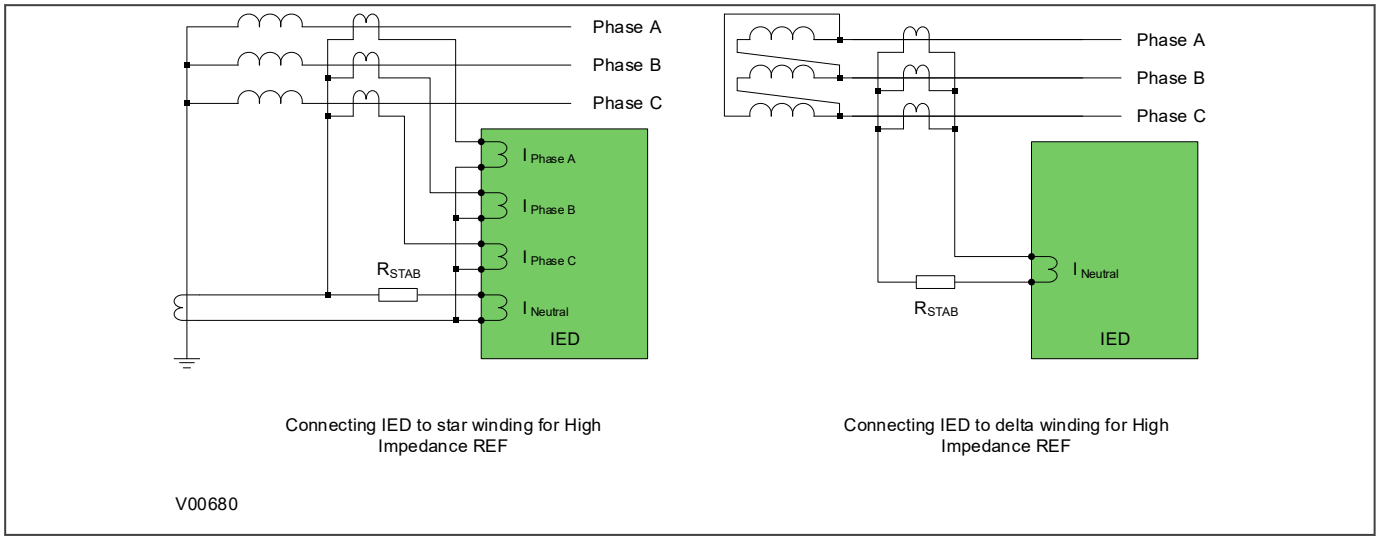

Figure 56: High impedance REF connection

7.3 RESTRICTED EARTH FAULT PROTECTION IMPLEMENTATION

7.3.1 RESTRICTED EARTH FAULT PROTECTION SETTINGS

Restricted Earth Fault Protection is implemented in the Restricted E/F menu of the relevant settings group. It is here that the constants and bias currents are set.

The REF protection may be configured to operate as either a high impedance or biased element.

7.3.2 LOW IMPEDANCE REF

7.3.2.1 SETTING THE BIAS CHARACTERISTIC

Low impedance REF uses a bias characteristic for increasing sensitivity and stabilising for through faults. The current required to trip the differential IED is called the Operate current. This Operate current is a function of the differential current and the bias current according to the bias characteristic.

The differential current is defined as follows:

$$I_{diff} = \left(\bar{I}_A + \bar{I}_B + \bar{I}_C\right) + K\bar{I}_N$$

The bias current is as follows:

$$I_{bias} = \frac{1}{2}\left\{\max\left[\left|I_A\right|,\left|I_B\right|,\left|I_C\right|\right] + K\left|I_N\right|\right\}$$

where:

- K = Neutral CT ratio / Line CT ratio
- IN = current measured by the neutral CT

The allowable range for K is:

$0.05 < K < 15$ for standard CTs

$0.05 < K < 20$ for sensitive CTs

The operate current is calculated according to the following characteristic:

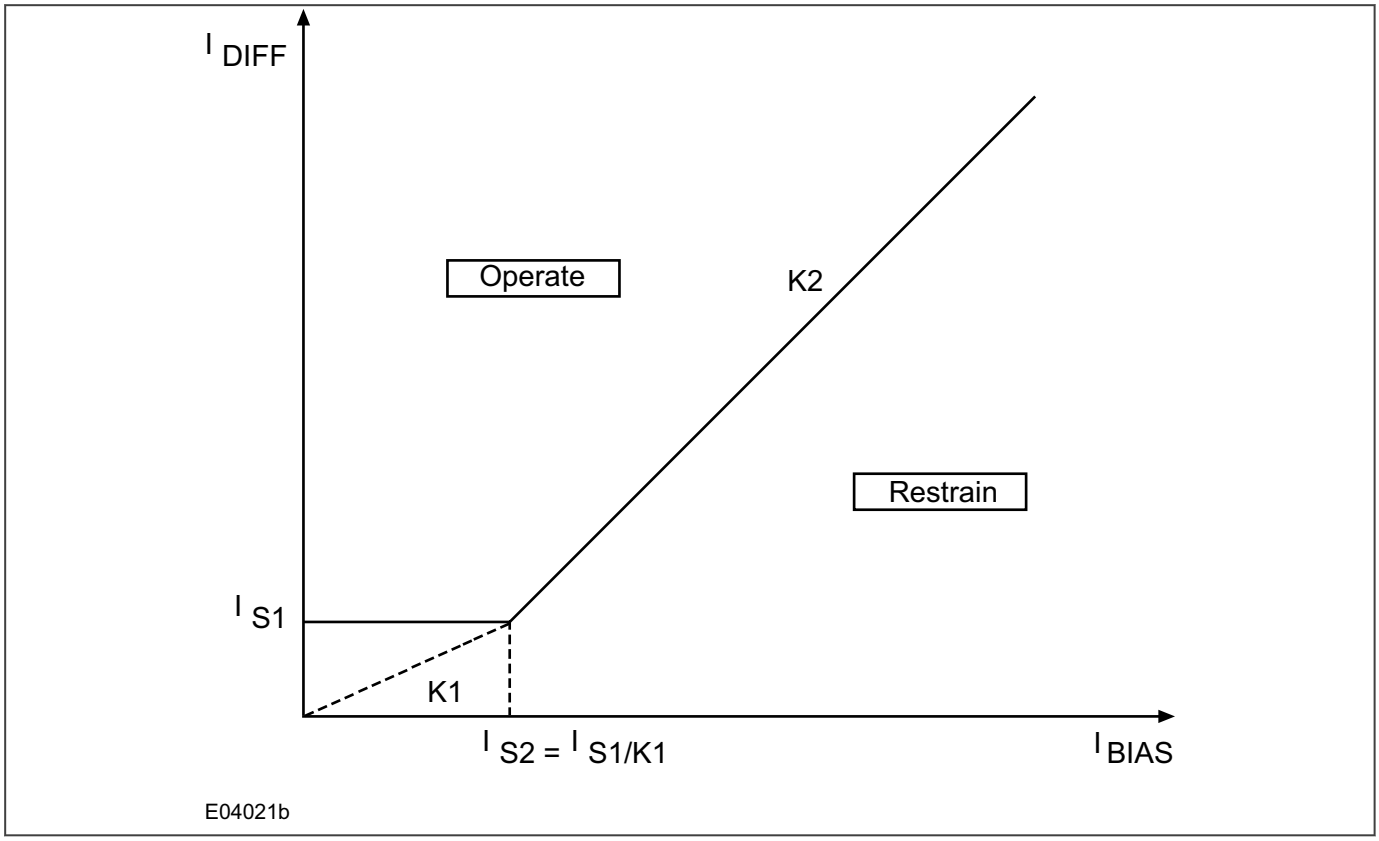

Figure 57: REF bias characteristic

The following settings are provided to define this bias characteristic:

- ***IREF> Is1***: sets the minimum trip threshold
- ***IREF> Is2***: sets the bias current kneepoint whereby the required trip current starts increasing
- ***IREF> k1***: defines the first slope
- ***IREF> k2***: defines the second slope

Note:
Is1 and Is2 are relative to the line CT, which is always the reference CT.

Note:
In order to obtain the graphic above, Is2 should be Is1/K1. Do not set K1 = 0 (as in that case the unit will always trip when the operating current is over Is1). However, if Is2 = Is1/K1, then the second knee point moves to the first knee point, the lower slope that spans Is1/K1 to Is2 becomes non-existent and the restrain characteristic applied is that of the higher slope, K2).

7.3.3 HIGH IMPEDANCE REF

The device provides a high impedance restricted earth fault protection function. An external resistor is required to provide stability in the presence of saturated line current transformers. Current transformer supervision signals do not block the high impedance REF protection. The appropriate logic must be configured in Flexlogic Equation Editor to block the high impedance REF when any of the above signals is asserted.

7.3.3.1 HIGH IMPEDANCE REF CALCULATION PRINCIPLES

The primary operating current (Iop) is a function of the current transformer ratio, the device operate current (***IREF>Is***), the number of current transformers in parallel with a REF element (n) and the magnetizing current of each current transformer (Ie) at the stability voltage (Vs). This relationship can be expressed in three ways:

1. The maximum current transformer magnetizing current to achieve a specific primary operating current with a particular operating current:

$$I_e < \frac{1}{n}\left(\frac{I_{op}}{CT\ ratio} - [IREF > Is]\right)$$

2. The maximum current setting to achieve a specific primary operating current with a given current transformer magnetizing current:

$$[IREF > Is] < \left(\frac{I_{op}}{CT\ ratio} - nI_e\right)$$

3. The protection primary operating current for a particular operating current with a particular level of magnetizing current:

$$I_{op} = (CT\ ratio)([IREF > Is] + nI_e)$$

To achieve the required primary operating current with the current transformers that are used, you must select a current setting for the high impedance element, as shown in item 2 above. The value of the stabilising resistor (R_{st}) can be calculated in the following manner.

$$R_{st} = \frac{Vs}{[IREF > Is]} = \frac{I_F\,(R_{CT} + 2R_L)}{[IREF > Is]}$$

where:

- R_{CT} = the resistance of the CT winding
- R_L = the resistance of the lead from the CT to the IED

> *Note:*
> *The above formula assumes negligible IED burden.*

We recommend a stabilizing resistor, which is continuously adjustable up to its maximum declared resistance.

7.4 APPLICATION NOTES

7.4.1 STAR WINDING RESISTANCE EARTHED

Consider the following resistance earthed star winding below.

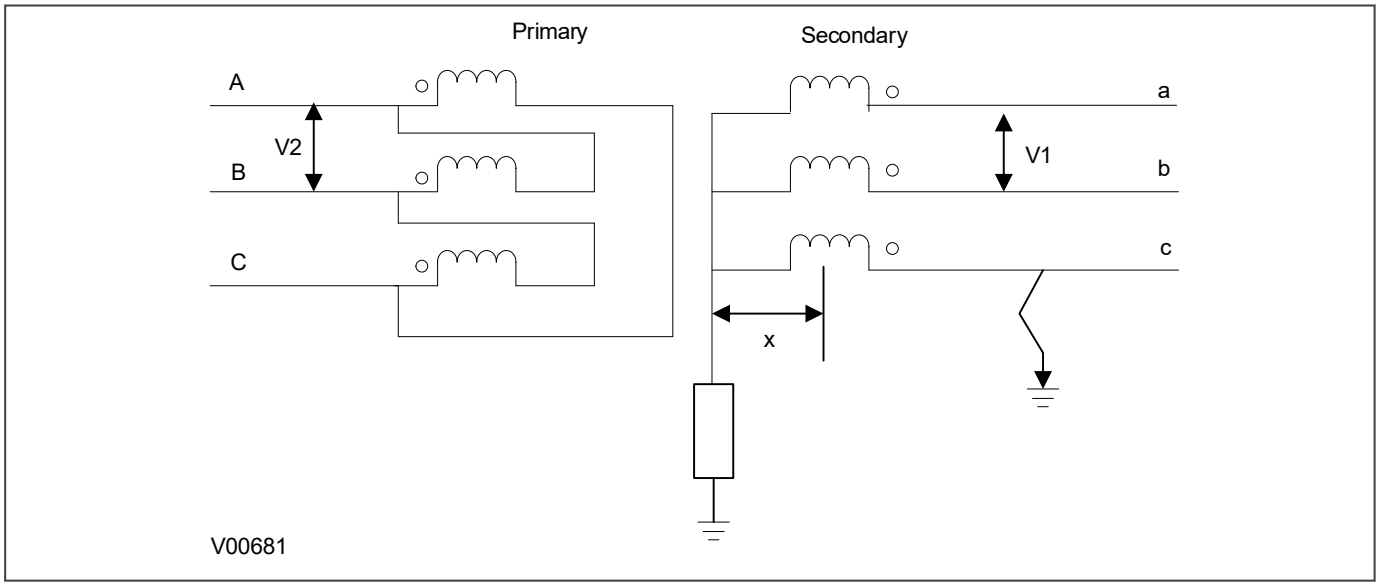

Figure 58: Star winding, resistance earthed

An earth fault on such a winding causes a current which is dependent on the value of earthing impedance. This earth fault current is proportional to the distance of the fault from the neutral point since the fault voltage is directly proportional to this distance.

The ratio of transformation between the primary winding and the short circuited turns also varies with the position of the fault. Therefore the current that flows through the transformer terminals is proportional to the square of the fraction of the winding which is short circuited.

The earthing resistor is rated to pass the full load current $I_{FLC} = V1/\sqrt{3}R$

Assuming that V1 = V2 then $T2 = \sqrt{3}T1$

For a fault at x PU distance from the neutral, the fault current $If = xV1/\sqrt{3}R$

Therefore the secondary fault current referred to the primary is $I_{primary} = x^2.I_{FLC}/\sqrt{3}$

If the fault is a single end fed fault, the primary current should be greater than 0.2 pu (Is1 default setting) for the differential protection to operate. Therefore $x^2/\sqrt{3} > 20\%$

The following diagram shows that 41% of the winding is protected by the differential element.

X in %	Idiff in %
10	0.58
20	2.31
30	5.20
40	9.24
50	14.43
60	20.00
70	28.29
80	36.95
90	46.77
100	57.74

59% of unprotected winding

41% of protected winding

V00682

Figure 59: Percentage of winding protected

7.4.2 LOW IMPEDANCE REF PROTECTION APPLICATION

7.4.2.1 SETTING GUIDELINES FOR BIASED OPERATION

Two bias settings are provided in the REF characteristic. The K1 level of bias is applied up to through currents of Is2, which is normally set to the rated current of the transformer. K1 is normally be set to 0% to give optimum sensitivity for internal faults. However, if any CT mismatch is present under normal conditions, then K1 may be increased accordingly, to compensate. We recommend a setting of 20% in this case.

K2 bias is applied for through currents above Is2 and would typically be set to 150%.

According to ESI 48-3 1977, typical settings for the Is1 thresholds are 10-60% of the winding rated current when solidly earthed and 10-25% of the minimum earth fault current for a fault at the transformer terminals when resistance earthed.

7.4.2.2 LOW IMPEDANCE REF SCALING FACTOR

The three line CTs are connected to the three-phase CTs, and the neutral CT is connected to the neutral CT input. These currents are then used internally to derive both a bias and a differential current quantity for use by the low impedance REF protection. The advantage of this mode of connection is that the line and neutral CTs are not differentially connected, so the neutral CT can also be used to provide the measurement for the Standby Earth Fault Protection. Also, no external components such as stabilizing resistors or Metrosils are required.

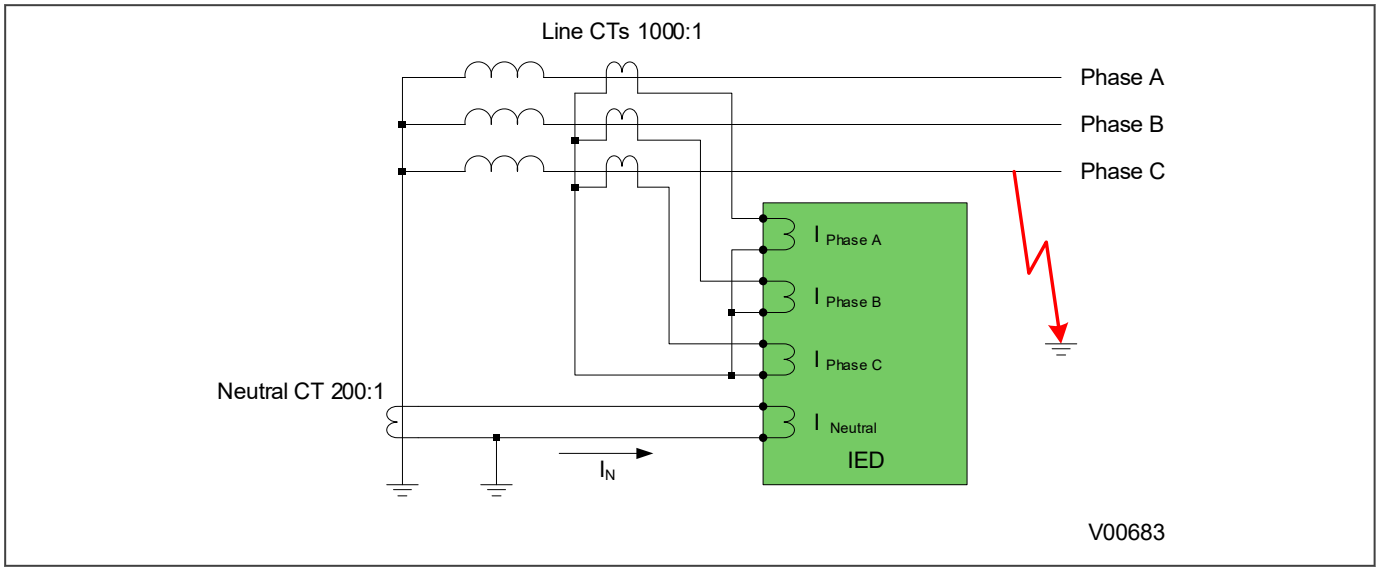

Figure 60: Low impedance REF scaling factor

Another advantage of Low Impedance REF protection is that you can use a neutral CT with a lower ratio than the line CTs in order to provide better earth fault sensitivity. In the bias calculation, the device applies a scaling factor to the neutral current. This scaling factor is as follows:

Scaling factor = K = Neutral CT ratio / Line CT ratio

This results in the following differential and bias current equations:

$$I_{diff} = \left(\bar{I}_A + \bar{I}_B + \bar{I}_C\right) + K\bar{I}_N$$

$$I_{bias} = \frac{1}{2}\left\{\max\left[\left|I_A\right|,\left|I_B\right|,\left|I_C\right|\right] + K\left|I_N\right|\right\}$$

7.4.2.3 PARAMETER CALCULATIONS

Consider a solidly earthed 90 MVA 132 kV transformer with a REF-protected star winding. Assume line CTS with a ratio of 400:1.

Is1 is set to 10% of the winding nominal current:

$= (0.1 \times 90 \times 10^6) / (\sqrt{3} \times 132 \times 10^3)$

= 39 Amps primary

= 39/400 = 0.0975 Amps secondary (approx 0.1 A)

Is2 is set to the rated current of the transformer:

$= 90 \times 10^6 / (\sqrt{3} \times 132 \times 10^3)$

= 390 Amps primary

= 390/400 = 0.975 Amps secondary (approx 1 A)

Set ***K1*** to 0% and ***K2*** to 150%

7.4.3 HIGH IMPEDANCE REF PROTECTION APPLICATION

7.4.3.1 HIGH IMPEDANCE REF OPERATING MODES

In the examples below, the respective Line CTS and measurement CTs must have the same CT ratios and similar magnetising characteristics.

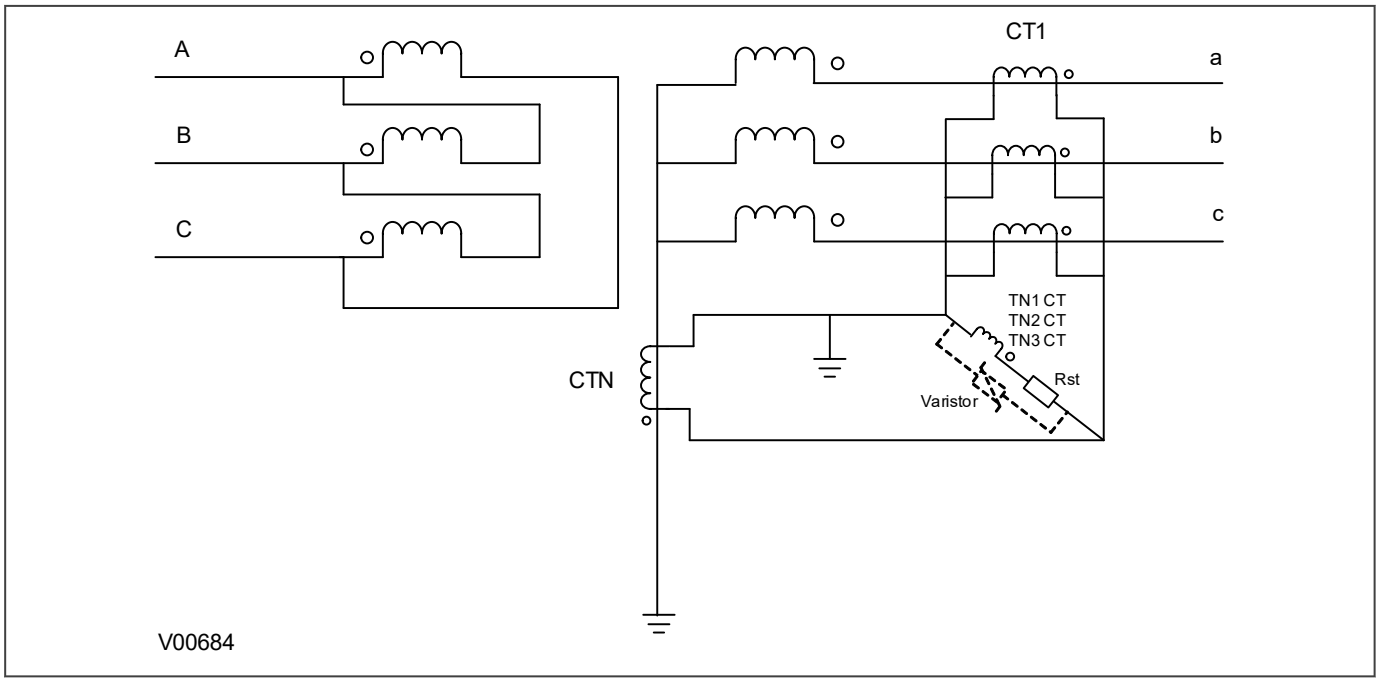

Figure 61: Hi-Z REF protection for a grounded star winding

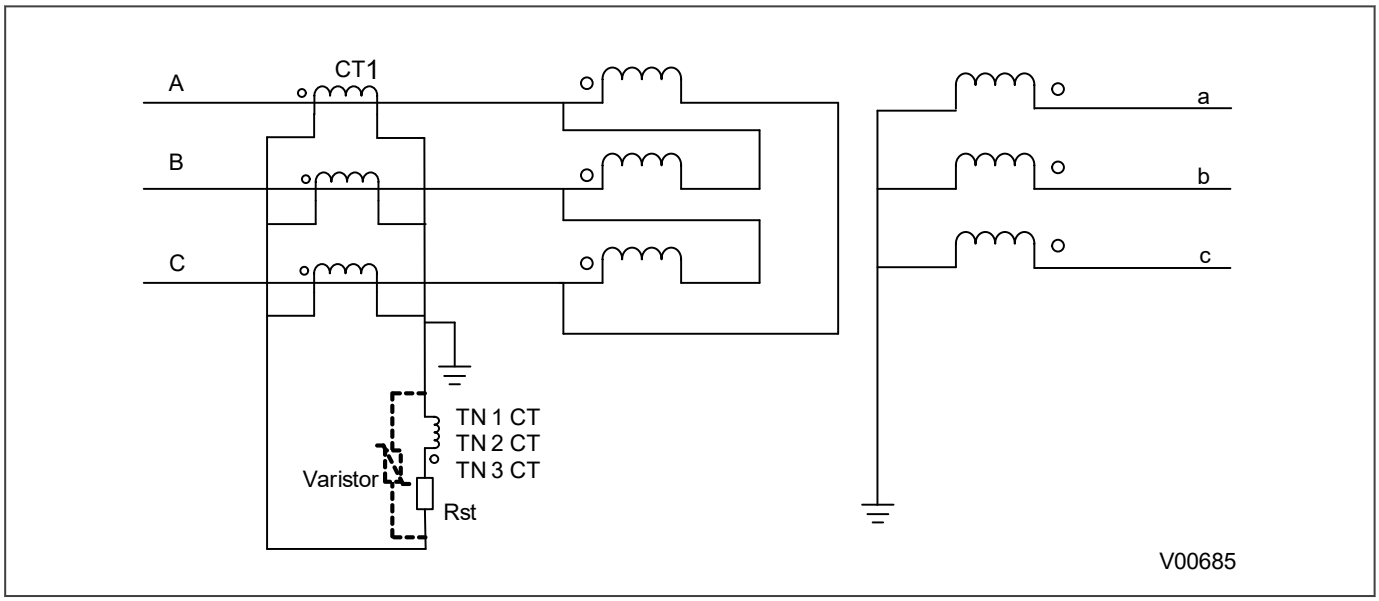

Figure 62: Hi-Z REF protection for a delta winding

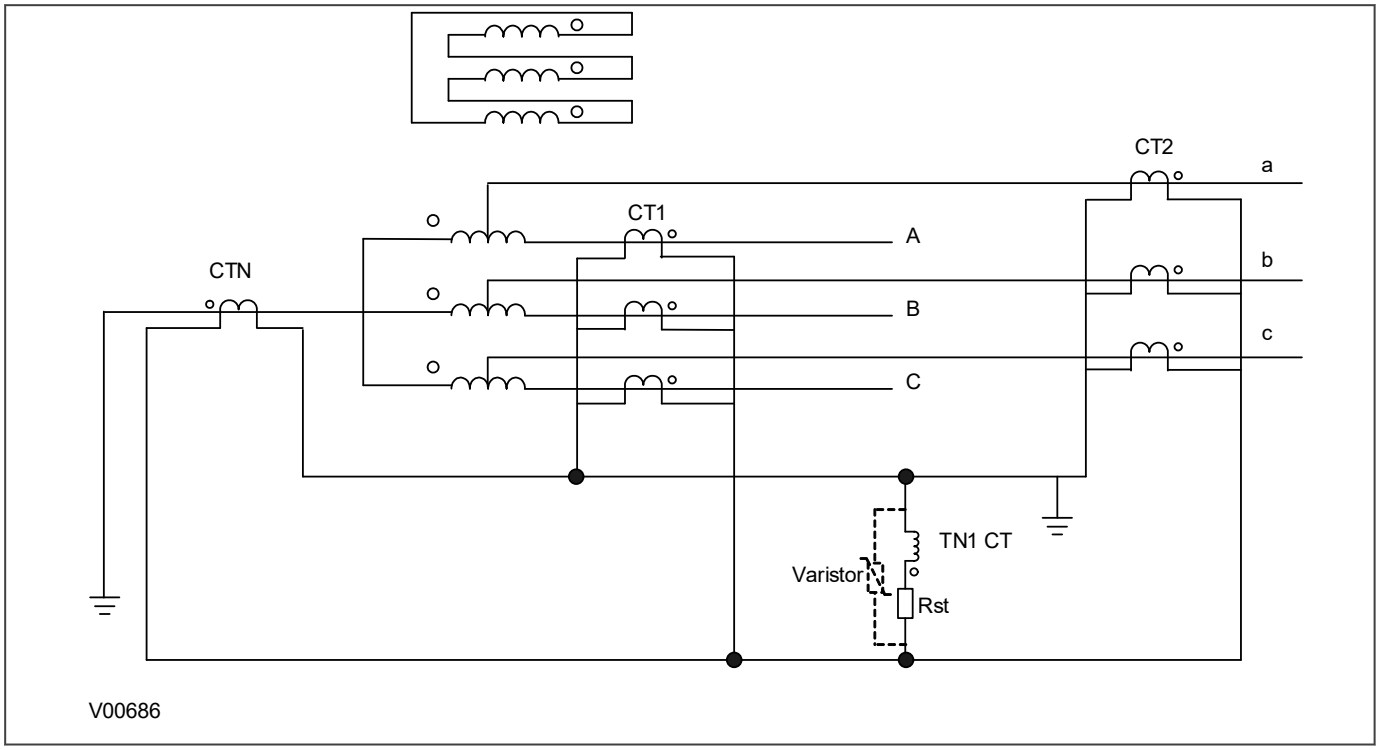

Figure 63: Hi-Z REF protection for autotransformer configuration

7.4.3.2 SETTING GUIDELINES FOR HIGH IMPEDANCE OPERATION

This scheme is very sensitive and can protect against low levels of fault current in resistance grounded systems. In this application, the ***IREF>Is*** settings should be chosen to provide a primary operating current less than 10-25% of the minimum earth fault level.

This scheme can also be used in a solidly grounded system. In this application, the ***IREF>Is*** settings should be chosen to provide a primary operating current between 10% and 60 % of the winding rated current.

The following diagram shows the application of a high impedance REF element to protect the LV winding of a power transformer.

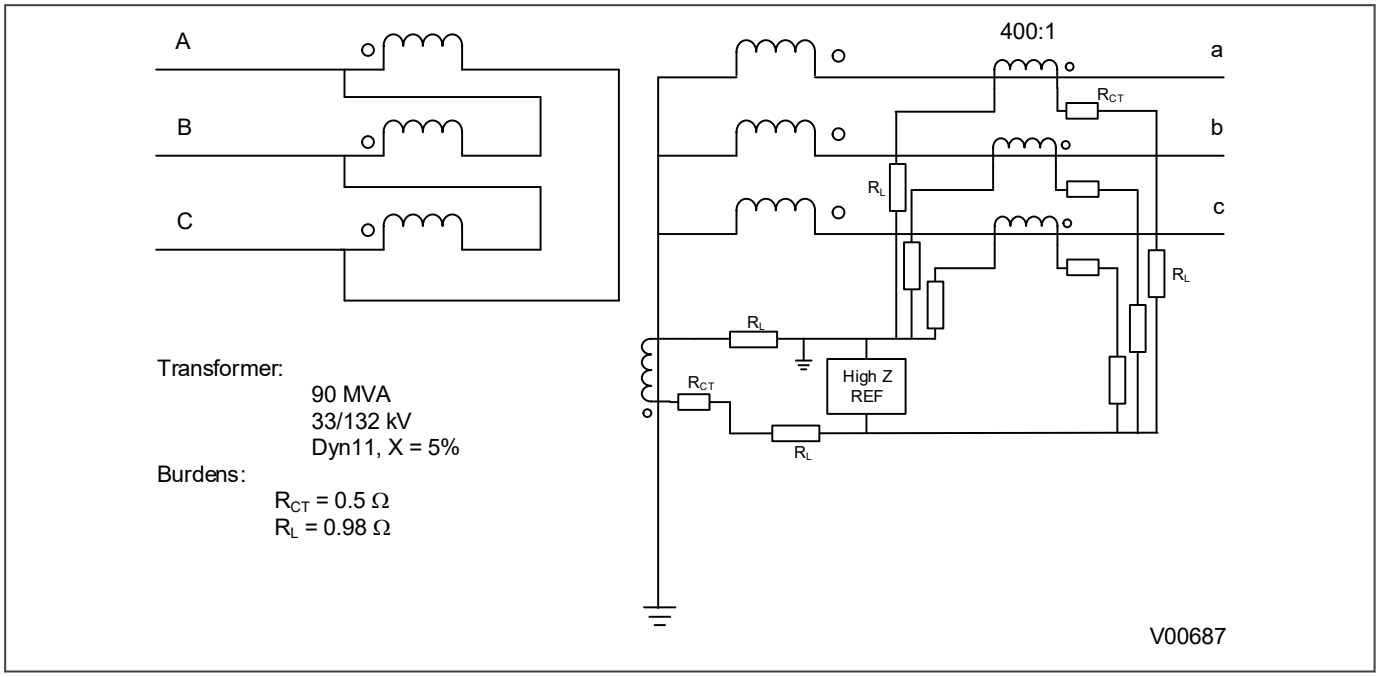

Figure 64: High impedance REF for the LV winding

7.4.3.2.1 STABILITY VOLTAGE CALCULATION

The transformer full load current, IFLC, is:

$$I_{FLC} = (90 \text{ x } 10^6)/32 \text{ x } 10^3 \text{ x } \sqrt{3}) = 394 \text{ A}$$

To calculate the stability voltage the maximum through fault level should be considered. The maximum through fault level, ignoring the source impedance, I_F, is:

$$I_F = I_{FLC}/_{TX} = 394/.05 = 7873 \text{ A}$$

The required stability voltage, VS, and assuming one CT saturated is:

$$V_s = KI_F(R_{CT} + 2R_L)$$

The following figure can be used to determine the K factor and the operating time. The K factor is valid when:

- 5 ≤ X/R ≤ 120

and

- 0.5In ≤ I f ≤ 40In

We recommend a value of VK/VS = 4.

With the transformer at full load current and percentage impedance voltage of 394A and 5% respectively, the prospective fault current is 7873 A and the required stability voltage Vs (assuming that one CT is saturated) is:

$$V_s = 0.9 \text{ x } 7873 \text{ x } (0.5 + 2 \text{ x } 0.98)/400 = 45.5 \text{ V}$$

The CTs knee point voltage should be at least 4 times Vs so that an average operating time of 40 ms is achieved.

7.4.3.2.2 PRIMARY CURRENT CALCULATION

The primary operating current should be between 10 and 60 % of the winding rated current. Assuming that the IED effective setting or primary operating current is approximately 30% of the full load current, the calculation below shows that a setting of less than 0.3 A is required.

Effective setting = $0.3I_{FLC}$/CT Ratio = 0.3 x 394/400 = approximately 0.3 A

7.4.3.2.3 STABILISING RESISTOR CALCULATION

Assuming that a setting of 0.1A is selected the value of the stabilizing resistor, R_{ST}, required is

$R_{ST} = V_s$/(IREF> Is1 (HV)) = 45.5/0.1 = 455 ohms

To achieve an average operating time of 40 ms, Vk/Vs should be 3.5.

The Kneepoint voltage is:

$V_K = 4V_s = 4 \times 45.5 = 182$ V.

If the actual V_K is greater than 4 times V_s, then the K factor increases. In this case, V_s should be recalculated.

> *Note:*
> *K can reach a maximum value of approximately 1.*

7.4.3.2.4 CURRENT TRANSFORMER CALCULATION

The effective primary operating current setting is:

$I_P = N(I_s + nI_e)$

By re-arranging this equation, you can calculate the excitation current for each of the current transformers at the stability voltage. This turns out to be:

$I_e = (0.3 - 0.1)/4 = 0.05$ A

In summary, the current transformers used for this application must have a kneepoint voltage of 182 V or higher (note that maximum Vk/Vs that may be considered is 16 and the maximum K factor is 1), with a secondary winding resistance of 0.5 ohms or lower and a magnetizing current at 45.5 V of less than 0.05 A.

Assuming a CT kneepoint voltage of 200 V, the peak voltage can be estimated as:

$V_P = 2\sqrt{2}V_K(V_F - V_K) = 2\sqrt{2}(200)(9004-200) = 3753$ V

This value is above the peak voltage of 3000 V and therefore a non-linear resistor is required.

> *Note:*
> *The kneepoint voltage value used in the above formula should be the actual voltage obtained from the CT magnetizing characteristic and not a calculated value.*

CHAPTER 8

CB FAIL PROTECTION

8.1 CHAPTER OVERVIEW

The device provides a Circuit Breaker Fail Protection function. This chapter describes the operation of this function including the principles, logic diagrams and applications.

This chapter contains the following sections:

Chapter Overview 150

Circuit Breaker Fail Protection 151

Circuit Breaker Fail Implementation 152

Circuit Breaker Fail Logic 154

Circuit Breaker Mapping 155

Application Notes 156

8.2 CIRCUIT BREAKER FAIL PROTECTION

When a fault occurs, one or more protection devices will operate and issue a trip command to the relevant circuit breakers. Operation of the circuit breaker is essential to isolate the fault and prevent, or at least limit, damage to the power system. For transmission and sub-transmission systems, slow fault clearance can also threaten system stability.

For these reasons, it is common practice to install Circuit Breaker Failure protection (CBF). CBF protection monitors the circuit breaker and establishes whether it has opened within a reasonable time. If the fault current has not been interrupted following a set time delay from circuit breaker trip initiation, the CBF protection will operate, whereby the upstream circuit breakers are back-tripped to ensure that the fault is isolated.

Note:
CBF protection is available in the P14D and P14N.

8.3 CIRCUIT BREAKER FAIL IMPLEMENTATION

Circuit Breaker Failure Protection is implemented under the ***SETPOINTS\CONTROL\CB FAIL\CB1 FAIL***.

The circuit breaker failure element determines that a breaker signaled to trip has not cleared a fault within a definite time. The circuit breaker failure scheme must Trip all breakers that can supply current to the faulted zone. Operation of a circuit breaker failure element causes clearing of a larger section of the power system than the initial Trip. As circuit breaker failure can result in tripping a large number of breakers, which can affect system safety and stability, a very high level of security is required.

The circuit breaker failure function monitors phase and neutral currents and/or status of the breaker while the protection trip or external initiation command exists. If circuit breaker failure is declared, the function operates the selected output relays, forces the autoreclose scheme to lockout and raises signals.

The operation of a circuit breaker failure element consists of three stages: initiation, determination of a failure condition, and outputs.

8.3.1 CIRCUIT BREAKER FAILURE INITIATION

The protection signals initially sent to the breaker or external initiation (signal that initiates circuit breaker failure) initiates the circuit breaker failure scheme. The initiating signal should be sealed-in if primary fault detection can reset before the breaker failure timers have finished timing. The seal-in is supervised by current level, so it is reset when the fault is cleared. If required, an incomplete sequence seal-in reset can be implemented by using the initiating operands to initiate a FlexLogic timer, set longer than any breaker failure time, whose output operand is selected to block the breaker failure scheme.

When the scheme is initiated, it sends a Trip signal, after a pickup delay, to the circuit breaker initially signalled to trip (this function is configured as Re-Trip and phase and neutral overcurrent condition is satisfied). This reduces the possibility of widespread tripping that can result from a declaration of a failed circuit breaker.

8.3.2 CIRCUIT BREAKER FAILURE DETERMINATION

The schemes determine a circuit breaker failure condition supervised by one of the following:

- Current supervision only
- Circuit breaker status only
- Both (current and circuit breaker status)

Each type of supervision is equipped with a time delay, after which a failed circuit breaker is declared and trip signals are sent to all breakers required to clear the zone. The delays are associated with breaker failure timers 1, 2, and 3.

Timer 1 logic is supervised by current level only. If fault current is detected after the delay interval, an output is issued. The continued presence of current indicates that the breaker has failed to interrupt the circuit. This logic detects a breaker that opens mechanically but fails to interrupt fault current.

Timer 2 logic is supervised by both current supervision and circuit breaker status. If the circuit breaker is still closed (as indicated by the auxiliary contact) and fault current is detected after the delay interval, an output is issued.

Timer 3 logic is supervised by a circuit breaker auxiliary contact only. There is no current level check in this logic as it is intended to detect low magnitude faults. External logic may be created to include the control switch contact used to indicate that the circuit breaker is in out-of-service mode, disabling this logic when the circuit breaker is out-of-service for maintenance.

Timer 1 and 2 logic provide two levels of current supervision - high-set and low-set - that allow the supervision level to change (for example: from a current which flows before a circuit breaker inserts an opening resistor into the faulted circuit to a lower level after resistor insertion). The high-set detector is enabled after the timeout of timer 1 or 2, along with a timer low-set delay that enables the low-set detector after its delay interval. The delay interval between high-set and low-set is the expected breaker opening time. Both current detectors provide a fast operating

time for currents at small multiples of the pickup value. The overcurrent detectors are required to operate after the circuit breaker failure delay interval to eliminate the need for very fast resetting overcurrent detectors.

8.3.3 CIRCUIT BREAKER FAILURE OUTPUTS

The outputs from the circuit breaker failure schemes are:

- Re-trip of the protected breaker
- FlexLogic operand that reports on the operation of the portion of the scheme where high-set or low-set current supervision is used
- FlexLogic operand that reports on the operation of the portion of the scheme where 52b status supervision is used only
- FlexLogic operand that initiates tripping required to clear the faulted zone. The Breaker Failure output can be sealed-in for an adjustable period

8.4 CIRCUIT BREAKER FAIL LOGIC

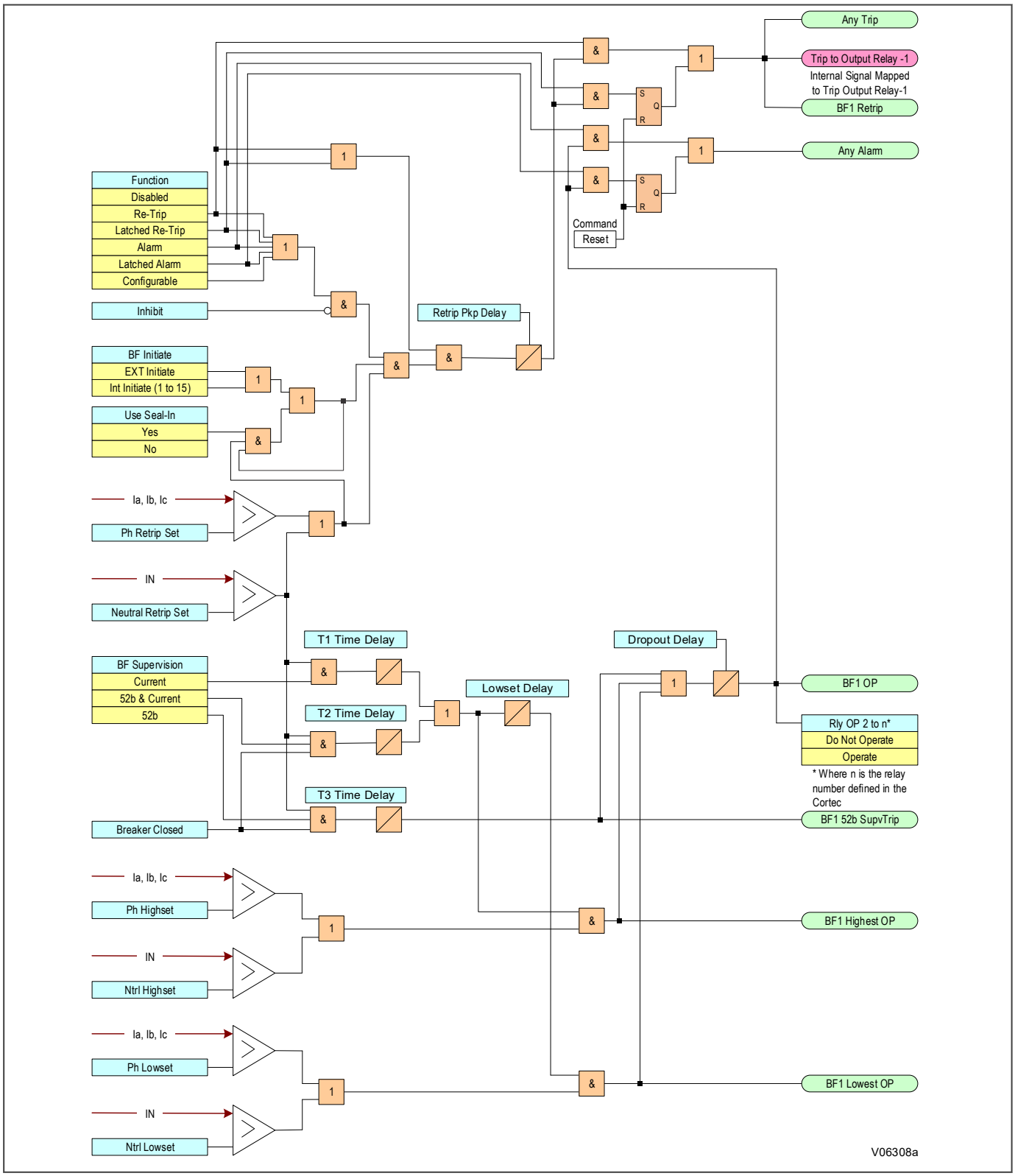

Figure 65: Circuit Breaker fail logic

8.5 CIRCUIT BREAKER MAPPING

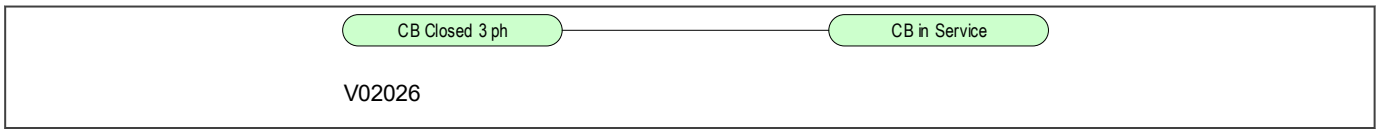

Figure 66: Circuit Breaker mapping

8.6 APPLICATION NOTES

8.6.1 RESET MECHANISMS FOR CB FAIL TIMERS

It is common practise to use low set undercurrent elements to indicate that circuit breaker poles have interrupted the fault or load current. This covers the following situations:

- Where circuit breaker auxiliary contacts are defective, or cannot be relied on to definitely indicate that the breaker has tripped.
- Where a circuit breaker has started to open but has become jammed. This may result in continued arcing at the primary contacts, with an additional arcing resistance in the fault current path. Should this resistance severely limit fault current, the initiating protection element may reset. Therefore, reset of the element may not give a reliable indication that the circuit breaker has opened fully.

For any protection function requiring current to operate, the device uses operation of undercurrent elements to detect that the necessary circuit breaker poles have tripped and reset the CB fail timers. However, the undercurrent elements may not be reliable methods of resetting CBF in all applications. For example:

- Where non-current operated protection, such as under/overvoltage or under/overfrequency, derives measurements from a line connected voltage transformer. Here, I< only gives a reliable reset method if the protected circuit would always have load current flowing. In this case, detecting dropoff of the initiating protection element might be a more reliable method.
- Where non-current operated protection, such as under/overvoltage or under/overfrequency, derives measurements from a busbar connected voltage transformer. Again using I< would rely on the feeder normally being loaded. Also, tripping the circuit breaker may not remove the initiating condition from the busbar, and so dropoff of the protection element may not occur. In such cases, the position of the circuit breaker auxiliary contacts may give the best reset method.

8.6.2 SETTING GUIDELINES (CB FAIL TIMER)

The following timing chart shows the CB Fail timing during normal and CB Fail operation. The maximum clearing time should be less than the critical clearing time which is determined by a stability study. The CB Fail back-up trip time delay considers the maximum CB clearing time, the CB Fail reset time plus a safety margin. Typical CB clearing times are 1.5 or 3 cycles. The CB Fail reset time should be short enough to avoid CB Fail back-trip during normal operation.

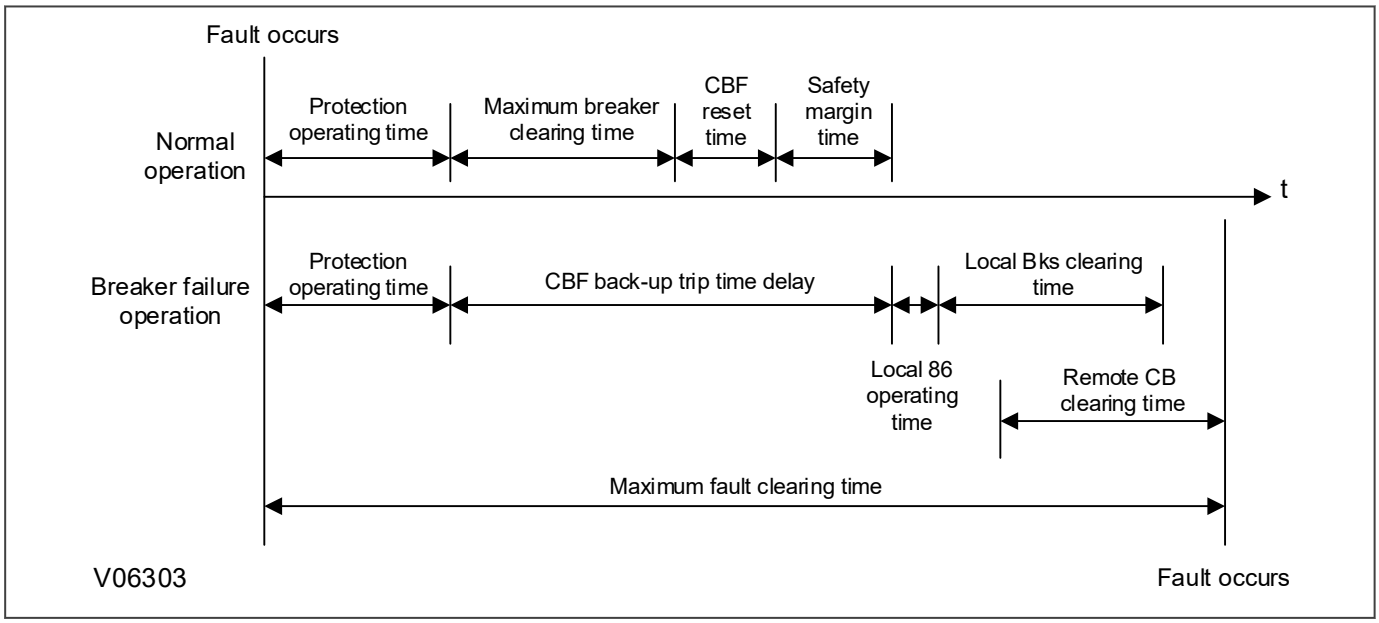

Figure 67: CB fail timing

The following examples consider direct tripping of a 2-cycle circuit breaker. Typical timer settings to use are as follows:

CB Fail Reset Mechanism	tBF Time Delay	Typical Delay For 2 Cycle Circuit Breaker
Initiating element reset	CB interrupting time + element reset time (max.) + error in tBF timer + safety margin	50 + 50 + 10 + 50 = 160 ms
CB open	CB auxiliary contacts opening/closing time (max.) + error in tBF timer + safety margin	50 + 10 + 50 = 110 ms
Undercurrent elements	CB interrupting time + undercurrent element (max.) + safety margin operating time	50 + 25 + 50 = 125 ms

CHAPTER 9

CURRENT TRANSFORMER REQUIREMENTS

9.1 CHAPTER OVERVIEW

This chapter contains the following sections:

Chapter Overview 159
CT requirements 160

9.2 CT REQUIREMENTS

The current transformer requirements are based on a maximum fault current of 50 times the rated current (In) with the device having an instantaneous overcurrent setting of 25 times the rated current. The current transformer requirements are designed to provide operation of all protection elements.

Where the criteria for a specific application are in excess of this, or the lead resistance exceeds the limiting lead resistance shown in the following table, the CT requirements may need to be modified according to the formulae in the subsequent sections:

Nominal Rating	Nominal Output	Accuracy Class	Accuracy Limited Factor	Limiting Lead Resistance
1A	2.5 VA	10P	20	1.3 ohms
5A	7.5 VA	10P	20	0.11 ohms

The formula subscripts used in the subsequent sections are as follows:

K = A constant affected by the dynamic response of the IED

I_{cn} = Maximum prospective secondary earth fault current or 31 times I> setting (whichever is lower) (amps)

I_{cp} = Maximum prospective secondary phase fault current or 31 times I> setting (whichever is lower) (amps)

I_f = Maximum through-fault current level (amps)

I_{fn} = Maximum prospective secondary earth fault current (amps)

I_{fp} = Maximum prospective secondary phase fault current (amps)

I_n = Rated secondary current (amps)

I_s = Current setting of REF elements (amps)

I_{sn} = Stage 3 & 4 earth fault setting (amps)

I_{sp} = Stage 3, 4, 5 and 6 setting (amps)

I_{st} = Motor start up current referred to CT secondary side (amps)

R_{CT} = Resistance of current transformer secondary winding (ohms)

R_L = Resistance of a single lead from IED to current transformer (ohms)

R_n = Impedance of the neutral current input at 30In (ohms)

R_p = Impedance of the phase current input at 30In (ohms)

R_{st} = Value of stabilising resistor for REF applications (ohms)

V_K = Required CT knee-point voltage (volts)

V_S = Required stability voltage

9.2.1 PHASE OVERCURRENT PROTECTION

9.2.1.1 DIRECTIONAL ELEMENTS

Time-delayed phase overcurrent elements

$$V_K = \frac{I_{cp}}{2}(R_{CT} + R_L + R_p)$$

Instantaneous phase overcurrent elements

$$V_K = \frac{I_{fp}}{2}(R_{CT} + R_L + R_p)$$

9.2.1.2 NON-DIRECTIONAL ELEMENTS

Time-delayed phase overcurrent elements

$$V_K = \frac{I_{cp}}{2}(R_{CT} + R_L + R_p)$$

Instantaneous phase overcurrent elements

$$V_K = I_{sp}(R_{CT} + R_L + R_p)$$

9.2.2 EARTH FAULT PROTECTION

9.2.2.1 DIRECTIONAL ELEMENTS

Instantaneous earth fault overcurrent elements

$$V_K = \frac{I_{fn}}{2}(R_{CT} + 2R_L + R_p + Rn)$$

9.2.2.2 NON-DIRECTIONAL ELEMENTS

Time-delayed earth fault overcurrent elements

$$V_K = \frac{I_{cn}}{2}(R_{CT} + 2R_L + R_p + R_n)$$

Instantaneous earth fault overcurrent elements

$$V_K = I_{sn}(R_{CT} + 2R_L + R_p + R_n)$$

9.2.3 SEF PROTECTION (RESIDUALLY CONNECTED)

9.2.3.1 DIRECTIONAL ELEMENTS

Time delayed SEF protection

$$V_K \geq \frac{I_{cn}}{2}(R_{CT} + 2R_L + R_p + Rn)$$

Instantaneous SEF protection

$$V_K \geq \frac{I_{fn}}{2}(R_{CT} + 2R_L + R_p + Rn)$$

9.2.3.2 NON-DIRECTIONAL ELEMENTS

Time delayed SEF protection

$$V_K \geq \frac{I_{cn}}{2}(R_{CT} + 2R_L + R_p + Rn)$$

Instantaneous SEF protection

$$V_K \geq \frac{I_{sn}}{2}(R_{CT} + 2R_L + R_p + Rn)$$

9.2.4 SEF PROTECTION (CORE-BALANCED CT)

9.2.4.1 DIRECTIONAL ELEMENTS

Instantaneous element

$$V_K \geq \frac{I_{fn}}{2}(R_{CT} + 2R_L + Rn)$$

Note:
Ensure that the phase error of the applied core balance current transformer is less than 90 minutes at 10% of rated current and less than 150 minutes at 1% of rated current.

9.2.4.2 NON-DIRECTIONAL ELEMENTS

Time delayed element

$$V_K \geq \frac{I_{cn}}{2}(R_{CT} + 2R_L + Rn)$$

Instantaneous element

$$V_K \geq I_{sn}(R_{CT} + 2R_L + Rn)$$

Note:
Ensure that the phase error of the applied core balance current transformer is less than 90 minutes at 10% of rated current and less than 150 minutes at 1% of rated current.

9.2.5 LOW IMPEDANCE REF PROTECTION

For X/R < 40 and I_f < 15I_n

$$V_K \geq 24 I_n (R_{CT} + 2R_L)$$

For 40 < X/R < 120 and 15I_n < If < 40I_n

$$V_K \geq 48 I_n (R_{CT} + 2R_L)$$

Note:
Class x or Class 5P CTs should be used for low impedance REF applications.

9.2.6 HIGH IMPEDANCE REF PROTECTION

The high impedance REF element will maintain stability for through-faults and operate in less than 40ms for internal faults, provided the following equations are met:

$$R_{st} = \frac{I_f (R_{CT} + 2R_L)}{I_s}$$

$$V_K \geq 4 I_s R_{st}$$

Note:
Class x CTs should be used for high impedance REF applications.

9.2.7 HIGH IMPEDANCE BUSBAR PROTECTION

The high impedance bus bar protection element will maintain stability for through faults and operate for internal faults. You should select Vk/Vs based on the X/R of the system. The equation is:

$$V_s = K * I_f * (R_{CT} + R_L)$$

For X/R <= 40

$V_k/V_s >= 2$

Typical operating time = 25 ms

For X/R > 40

$V_k/V_s >= 4$

Typical operating time = 30 ms

Note:
K is a constant affected by the dynamic response of the device. K is always equal to 1.

9.2.8 USE OF METROSIL NON-LINEAR RESISTORS

Current transformers can develop high peak voltages under internal fault conditions. Metrosils are used to limit these peak voltages to a value below the maximum withstand voltage (usually 3 kV).

You can use the following formulae to estimate the peak transient voltage that could be produced for an internal fault. The peak voltage produced during an internal fault is a function of the current transformer kneepoint voltage and the prospective voltage that would be produced for an internal fault if current transformer saturation did not occur.

$$Vp = 2\sqrt{(2VK(V_F - V_K))}$$

$$Vf = I'f(R_{CT} + 2_{RL} + R_{ST})$$

where:

- Vp = Peak voltage developed by the CT under internal fault conditions
- Vk = Current transformer kneepoint voltage
- Vf = Maximum voltage that would be produced if CT saturation did not occur
- I'f = Maximum internal secondary fault current
- R_{CT} = Current transformer secondary winding resistance
- R_L = Maximum lead burden from current transformer to IED
- R_{ST} = IED stabilising resistor

You should always use Metrosils when the calculated values are greater than 3000 V. Metrosils are connected across the circuit to shunt the secondary current output of the current transformer from the device to prevent very high secondary voltages.

Metrosils are externally mounted and take the form of annular discs. Their operating characteristics follow the expression:

$$V = CI^{0.25}$$

where:

- V = Instantaneous voltage applied to the Metrosil
- C = Constant of the Metrosil
- I = Instantaneous current through the Metrosil

With a sinusoidal voltage applied across the Metrosil, the RMS current would be approximately 0.52 x the peak current. This current value can be calculated as follows:

$$I_{RMS} = 0.52\left(\frac{\sqrt{2}V_{S(RMS)}}{C}\right)^4$$

where:

- $V_{S(RMS)}$ = RMS value of the sinusoidal voltage applied across the metrosil.

This is due to the fact that the current waveform through the Metrosil is not sinusoidal but appreciably distorted.

The Metrosil characteristic should be such that it complies with the following requirements:

- The Metrosil current should be as low as possible, and no greater than 30 mA RMS for 1 A current transformers or 100 mA RMS for 5 A current transformers.
- At the maximum secondary current, the Metrosil should limit the voltage to 1500 V RMS or 2120 V peak for 0.25 second. At higher device voltages it is not always possible to limit the fault voltage to 1500 V rms, so higher fault voltages may have to be tolerated.

The following tables show the typical Metrosil types that will be required, depending on IED current rating, REF voltage setting etc.

Metrosils for devices with a 1 Amp CT

The Metrosil units with 1 Amp CTs have been designed to comply with the following restrictions:

- The Metrosil current should be less than 30 mA rms.
- At the maximum secondary internal fault current the Metrosil should limit the voltage to 1500 V rms if possible.

The Metrosil units normally recommended for use with 1Amp CTs are as shown in the following table:

	Nominal Characteristic		Recommended Metrosil Type	
Device Voltage Setting	**C**	**β**	**Single Pole IED**	**Triple Pole IED**
Up to 125 V RMS	450	0.25	600A/S1/S256	600A/S3/1/S802
125 to 300 V RMS	900	0.25	600A/S1/S1088	600A/S3/1/S1195

Note:
Single pole Metrosil units are normally supplied without mounting brackets unless otherwise specified by the customer.

Metrosils for devices with a 5 Amp CT

These Metrosil units have been designed to comply with the following requirements:

- The Metrosil current should be less than 100 mA rms (the actual maximum currents passed by the devices shown below their type description.
- At the maximum secondary internal fault current the Metrosil should limit the voltage to 1500 V rms for 0.25secs. At the higher IED settings, it is not possible to limit the fault voltage to 1500 V rms so higher fault voltages have to be tolerated.

The Metrosil units normally recommended for use with 5 Amp CTs and single pole IEDs are as shown in the following table:

Secondary Internal Fault Current	Recommended Metrosil Types for Various Voltage Settings			
Amps RMS	Up to 200 V RMS	250 V RMS	275 V RMS	300 V RMS
50A	600A/S1/S1213 C = 540/640 35 mA RMS	600A/S1/S1214 C = 670/800 40 mA RMS	600A/S1/S1214 C = 670/800 50 mA RMS	600A/S1/S1223 C = 740/870 50 mA RMS
100A	600A/S2/P/S1217 C = 470/540 70 mA RMS	600A/S2/P/S1215 C = 570/670 75 mA RMS	600A/S2/P/S1215 C = 570/670 100 mA RMS	600A/S2/P/S1196 C = 620/740 100 mA RMS
150A	600A/S3/P/S1219 C = 430/500 100 mA RMS	600A/S3/P/S1220 C = 520/620 100 mA RMS	600A/S3/P/S1221 C = 570/670 100 mA RMS	600A/S3/P/S1222 C = 620/740 100 mA RMS

In some situations single disc assemblies may be acceptable, contact GE Vernova for detailed applications.

Note:
The Metrosils recommended for use with 5 Amp CTs can also be used with triple pole devices and consist of three single pole units mounted on the same central stud but electrically insulated from each other. To order these units please specify "Triple pole Metrosil type", followed by the single pole type reference. Metrosil for higher voltage settings and fault currents are available if required.

9.2.9 USE OF ANSI C-CLASS CTS

Where American/IEEE standards are used to specify CTs, the C class voltage rating can be used to determine the equivalent knee point voltage according to IEC. The equivalence formula is:

$$V_K = 1.05(C\ rating\ in\ volts) + 100R_{CT}$$

CHAPTER 10

VOLTAGE PROTECTION FUNCTIONS

10.1 CHAPTER OVERVIEW

The device provides a wide range of voltage protection functions. This chapter describes the operation of these functions including the principles, logic diagrams and applications.

This chapter contains the following sections:

Chapter Overview 168
Undervoltage Protection 169
Overvoltage Protection 172
Residual Overvoltage Protection 175
Negative Sequence Overvoltage Protection 179
Positive Sequence Undervoltage Protection 181
Positive Sequence Overvoltage Protection 182
Volts Per Hertz 183
UV Reactive Power 186
Timed Undervoltage Protection (27T) 191
Moving Average Overvoltage Protection 194

10.2 UNDERVOLTAGE PROTECTION

Undervoltage conditions may occur on a power system for a variety of reasons, some of which are outlined below:

- Undervoltage conditions can be related to increased loads, whereby the supply voltage will decrease in magnitude. This situation would normally be rectified by voltage regulating equipment such as AVRs (Auto Voltage Regulators) or On Load Tap Changers. However, failure of this equipment to bring the system voltage back within permitted limits leaves the system with an undervoltage condition, which must be cleared.
- If the regulating equipment is unsuccessful in restoring healthy system voltage, then tripping by means of an undervoltage element is required.
- Faults occurring on the power system result in a reduction in voltage of the faulty phases. The proportion by which the voltage decreases is dependent on the type of fault, method of system earthing and its location. Consequently, co-ordination with other voltage and current-based protection devices is essential in order to achieve correct discrimination.
- Complete loss of busbar voltage. This may occur due to fault conditions present on the incomer or busbar itself, resulting in total isolation of the incoming power supply. For this condition, it may be necessary to isolate each of the outgoing circuits, such that when supply voltage is restored, the load is not connected. Therefore, the automatic tripping of a feeder on detection of complete loss of voltage may be required. This can be achieved by a three-phase undervoltage element.
- Where outgoing feeders from a busbar are supplying induction motor loads, excessive dips in the supply may cause the connected motors to stall, and should be tripped for voltage reductions that last longer than a pre-determined time.

10.2.1 UNDERVOLTAGE PROTECTION IMPLEMENTATION

Undervoltage Protection is implemented under the path ***SETPOINTS***/***PROTECTION***/***GROUP [1-6]***/***VOLTAGE PROT***/***PHASE UV***.

The product provides four stages of Undervoltage protection with independent time delay characteristics.

Each stage provides a choice of operate characteristics, where you can select between:

- An IDMT characteristic
- A range of user-defined curves
- DT (Definite Time)

You set this using the ***V<(n) Curve***, depending on the stage.

The IDMT characteristic is defined by the following formula:

$$T = D/(1 - V/Vpkp)$$

where:

- T = Operating time in seconds
- D = Undervoltage Pickup Time Delay setpoint (for D = 0.00 operates instantaneously)
- V = Voltage as a fraction of the nominal VT Secondary Voltage
- Vpkp = Undervoltage Pickup Level

If FlexCurves are selected, the operating time is determined based on the following equation:

- T= Flexcurve(Vpkp/V)

The drop time detection can be delayed using ***V<[X] Reset Time***. The Reset Mode is based on IEC 60255-151 reset characteristics, and can be configured to Definite or Dependent time.

The undervoltage stages can be configured either as phase-to-neutral or phase-to-phase voltages in the setting ***V< [n] Meas Mode***.

Additional stages are included in order to provide multiple output types, such as alarm and trip stages. Alternatively, different time settings may be required depending upon the severity of the voltage dip. For example, motor loads will be able to cope with a small voltage dip for a longer time than a major one.

Outputs are available for single, double or three phase conditions via the ***V< (n) Operate Mode*** setting for each stage.

10.2.2 UNDERVOLTAGE PROTECTION LOGIC

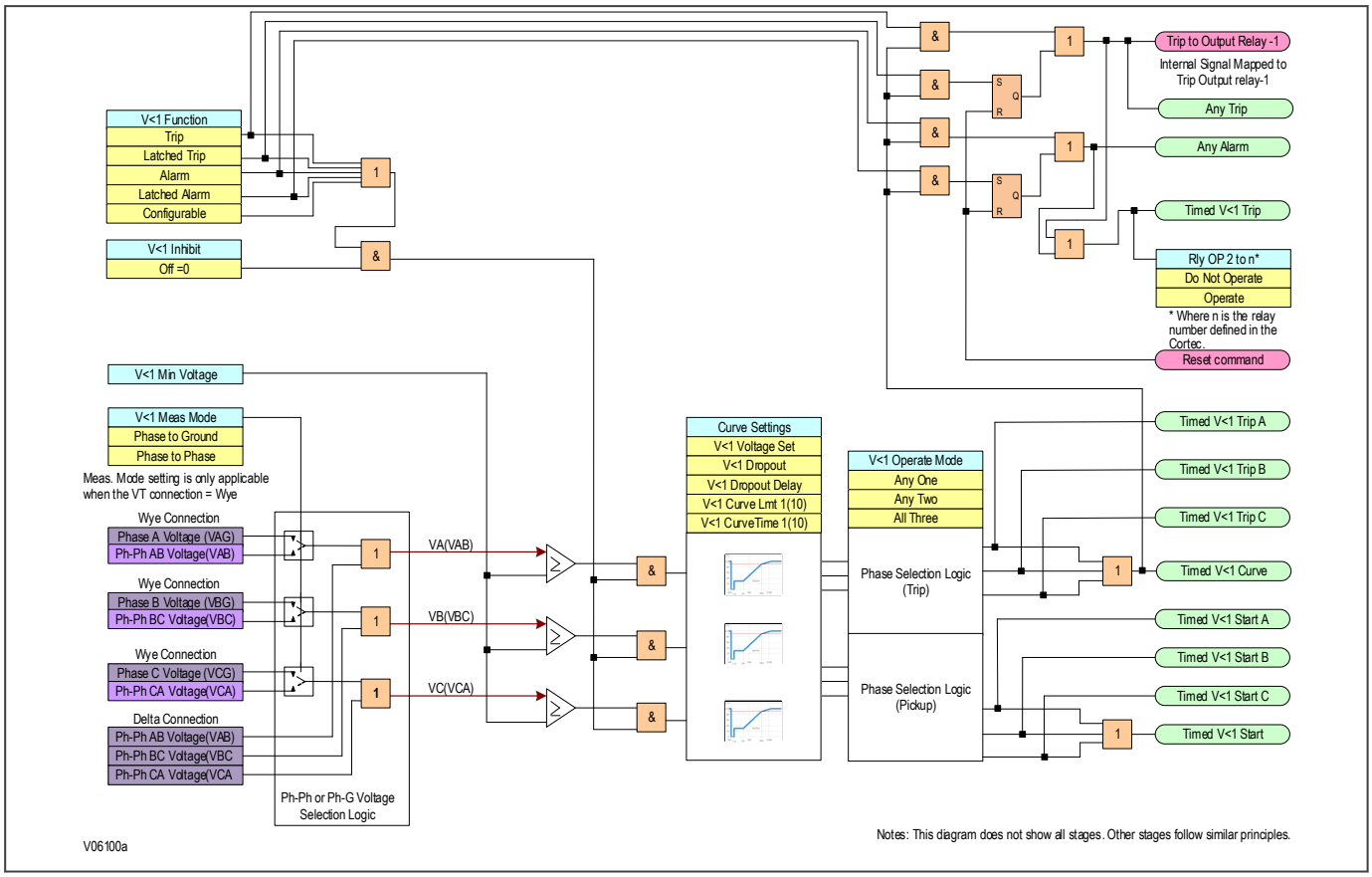

Figure 68: Undervoltage - single and three phase tripping mode (single stage)

The Undervoltage protection function detects when the voltage magnitude for a certain stage falls short of a set threshold. If this happens a ***Start*** signal, signifying the "Start of protection", is produced. This Start signal can be blocked by the ***VTS Fast Block*** signal and a ***V<(n) Min Voltage*** threshold setting. This ***Start*** signal is applied to the timer module to produce the ***Trip*** signal. For each stage, there are three Phase undervoltage detection modules, one for each phase. The three ***Start*** signals from each of these phases are OR'd together to create a 3-phase Start signal (***V<(n) Start***), which can be be activated when any of the three phases start (Any Phase), or when all three phases start (Three Phase), depending on the chosen ***V<(n) Operate Mode*** setting.

The outputs of the timer modules are the trip signals which are used to drive the tripping output relay. These tripping signals are also OR'd together to create a 3-phase Trip signal, which are also controlled by the ***V<(n) Operate Mode*** setting.

In some cases, we do not want the undervoltage element to trip; for example, when the protected feeder is de-energised, or the circuit breaker is opened, an undervoltage condition would obviously be detected, but we would not want to start protection. To cater for this, a ***V<(n) Min Voltage*** threshold setting blocks the ***Start*** signal for each phase.

10.2.3 APPLICATION NOTES

10.2.3.1 UNDERVOLTAGE SETTING GUIDELINES

In most applications, undervoltage protection is not required to operate during system earth fault conditions. If this is the case you should select phase-to-phase voltage measurement, as this quantity is less affected by single-phase voltage dips due to earth faults.

The voltage threshold setting for the undervoltage protection should be set at some value below the voltage excursions that may be expected under normal system operating conditions. This threshold is dependent on the system in question but typical healthy system voltage excursions may be in the order of 10% of nominal value.

The same applies to the time setting. The required time delay is dependent on the time for which the system is able to withstand a reduced voltage.

If motor loads are connected, then a typical time setting may be in the order of 0.5 seconds.

10.3 OVERVOLTAGE PROTECTION

Overvoltage conditions are generally related to loss of load conditions, whereby the supply voltage increases in magnitude. This situation would normally be rectified by voltage regulating equipment such as AVRs (Auto Voltage Regulators) or On Load Tap Changers. However, failure of this equipment to bring the system voltage back within permitted limits leaves the system with an overvoltage condition which must be cleared.

> *Note:*
> *During earth fault conditions on a power system there may be an increase in the healthy phase voltages. Ideally, the system should be designed to withstand such overvoltages for a defined period of time.*

10.3.1 OVERVOLTAGE PROTECTION IMPLEMENTATION

Overvoltage Protection is implemented under the path ***SETPOINTS***/***PROTECTION***/***GROUP [1-6]***/***VOLTAGE PROT***/***PHASE OV***.

The product provides overvoltage protection with independent time delay characteristics.

Each stage provides a choice of operate characteristics, where you can select between:

- An IDMT characteristic
- A range of user-defined curves
- DT (Definite Time)

You set this using the ***V>(n) Curve***.

The IDMT characteristic is defined by the following formula:

The operating time is defined by the following formula:

$$T = \frac{D}{\left(\frac{V}{V_{pickup}} - 1\right)}$$

when V > Vpickup

Where:

- T = trip time in seconds
- D = Overvoltage Pickup Delay setpoint
- V = actual phase-phase voltage
- Vpickup = Overvoltage Pickup setpoint

The overvoltage stages can be configured either as phase-to-neutral or phase-to-phase voltages in the ***V>(n) Meas Mode*** setting.

Additional stages are included in order to provide multiple output types, such as alarm and trip stages. Alternatively, different time settings may be required depending upon the severity of the voltage increase.

Outputs are available for single, double or three-phase conditions via the ***V>(n) Operate Mode*** setting for each stage.

10.3.2 OVERVOLTAGE PROTECTION LOGIC

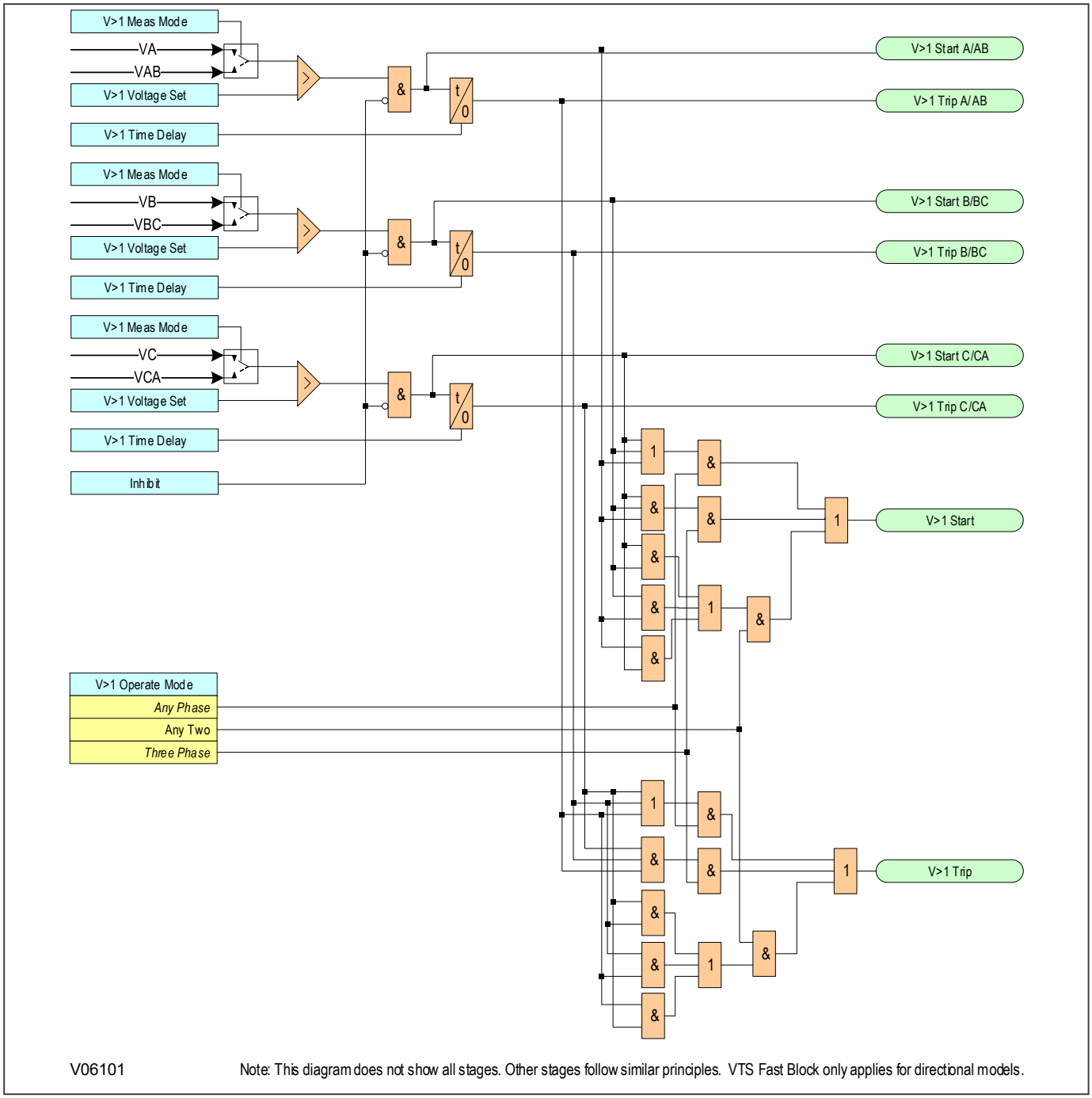

Figure 69: Overvoltage - single and three phase tripping mode (single stage)

The Overvoltage protection function detects when the voltage magnitude for a certain stage exceeds a set threshold. If this happens a ***Start*** signal, signifying the "Start of protection", is produced. This Start signal can be blocked by the ***Inhibit*** signal. This start signal is applied to the timer module to produce the ***Trip*** signal. For each stage, there are three Phase overvoltage detection modules, one for each phase. The three ***Start*** signals from each of these phases are OR'd together to create a 3-phase Start signal (***V>(n) Start***), which can then be activated when any of the three phases start (Any Phase), or when all three phases start (Three Phase), depending on the chosen ***V>(n) Operate Mode*** setting.

The outputs of the timer modules are the trip signals which are used to drive the tripping output relay. These tripping signals are also OR'd together to create a 3-phase Trip signal, which are also controlled by the ***V>(n) Operate Mode*** setting.

10.3.3 APPLICATION NOTES

10.3.3.1 OVERVOLTAGE SETTING GUIDELINES

The provision of multiple stages and their respective operating characteristics allows for a number of possible applications:

- Definite Time can be used for both stages to provide the required alarm and trip stages.
- Use of the IDMT characteristic allows grading of the time delay according to the severity of the overvoltage. As the voltage settings for both of the stages are independent, the second stage could then be set lower than the first to provide a time-delayed alarm stage.
- If only one stage of overvoltage protection is required, or if the element is required to provide an alarm only, the remaining stage may be disabled.

This type of protection must be co-ordinated with any other overvoltage devices at other locations on the system.

10.4 RESIDUAL OVERVOLTAGE PROTECTION

On a healthy three-phase power system, the sum of the three-phase to earth voltages is nominally zero, as it is the vector sum of three balanced vectors displaced from each other by 120°. However, when an earth fault occurs on the primary system, this balance is upset and a residual voltage is produced. This condition causes a rise in the neutral voltage with respect to earth. Consequently this type of protection is also commonly referred to as 'Neutral Voltage Displacement' or NVD for short.

This residual voltage may be derived (from the phase voltages) or measured (from a measurement class open delta VT). Derived values will normally only be used where the model does not support measured functionality (a dedicated measurement class VT). If a measurement class VT is used to produce a measured Residual Voltage, it cannot be used for other features such as Check Synchronisation.

This offers an alternative means of earth fault detection, which does not require any measurement of current. This may be particularly advantageous in high impedance earthed or insulated systems, where the provision of core balanced current transformers on each feeder may be either impractical, or uneconomic, or for providing earth fault protection for devices with no current transformers.

10.4.1 RESIDUAL OVERVOLTAGE PROTECTION IMPLEMENTATION

Residual Overvoltage Protection is implemented under the paths ***SETPOINTS***/***PROTECTION***/***GROUP [1-6]***/ ***VOLTAGE PROT***/***RESIDUAL OV(M)***--for measured values, and ***SETPOINTS***/***PROTECTION***/***GROUP [1-6]***/ ***VOLTAGE PROT***/***RESIDUAL OV(D)***--for derived values.

Some applications require more than one stage. For example an insulated system may require an alarm stage and a trip stage. It is common in such a case for the system to be designed to withstand the associated healthy phase overvoltages for a number of hours following an earth fault. In such applications, an alarm is generated soon after the condition is detected, which serves to indicate the presence of an earth fault on the system. This gives time for system operators to locate and isolate the fault. The second stage of the protection can issue a trip signal if the fault condition persists.

The product provides Residual Overvoltage protection with independent time delay characteristics.

Each stage provides a choice of operate characteristics, where you can select between:

- An IDMT characteristic
- A range of user-defined curves
- DT (Definite Time)

The operating time is given by:

$$T = \frac{D}{\left(\frac{V}{V_{pickup}} - 1\right)}$$

when V > Vpickup

Where:

- T = trip time in seconds
- D = overvoltage Pickup Delay setpoint
- V = measured or derived phase-phase voltage
- Vpickup = overvoltage Pickup setpoint

You set this and all others in this section using the ***VN(x)>(n) Curve*** technically.

The residual voltage may be derived from the phase voltages (Vres = Va + Vb +Vc) or measured from the 4th VT input.

The device derives the residual voltage internally from the three-phase voltage inputs supplied from either a 5-limb VT or three single-phase VTs. These types of VT design provide a path for the residual flux and consequently permit the device to derive the required residual voltage. In addition, the primary star point of the VT must be earthed. Three-limb VTs have no path for residual flux and are therefore unsuitable for this type of protection.

10.4.2 RESIDUAL OVERVOLTAGE LOGIC

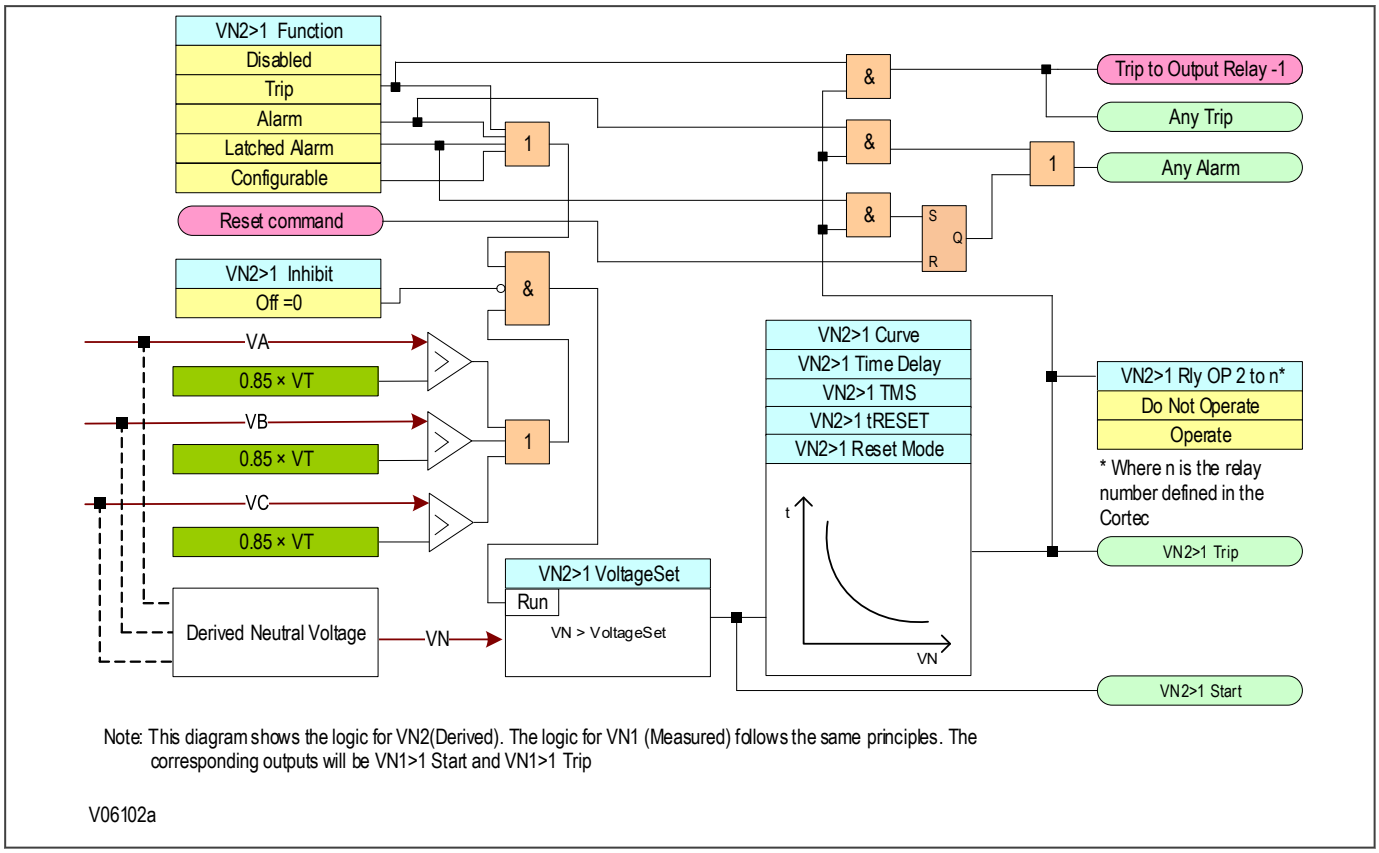

Figure 70: Residual overvoltage logic

The Residual Overvoltage module (VN>) is a level detector that detects when the voltage magnitude exceeds a set threshold, for each stage. When this happens, the comparator output produces a ***Start*** signal (***VN>(n) Start***), which signifies the "Start of protection". This can be blocked by a ***VTS Fast block*** signal (in P14D only). This ***Start*** signal is applied to the timer module. The output of the timer module is the ***VN> (n) Trip*** signal which is used to drive the tripping output relay.

10.4.3 APPLICATION NOTES

10.4.3.1 CALCULATION FOR SOLIDLY EARTHED SYSTEMS

Consider a Phase-A to Earth fault on a simple radial system.

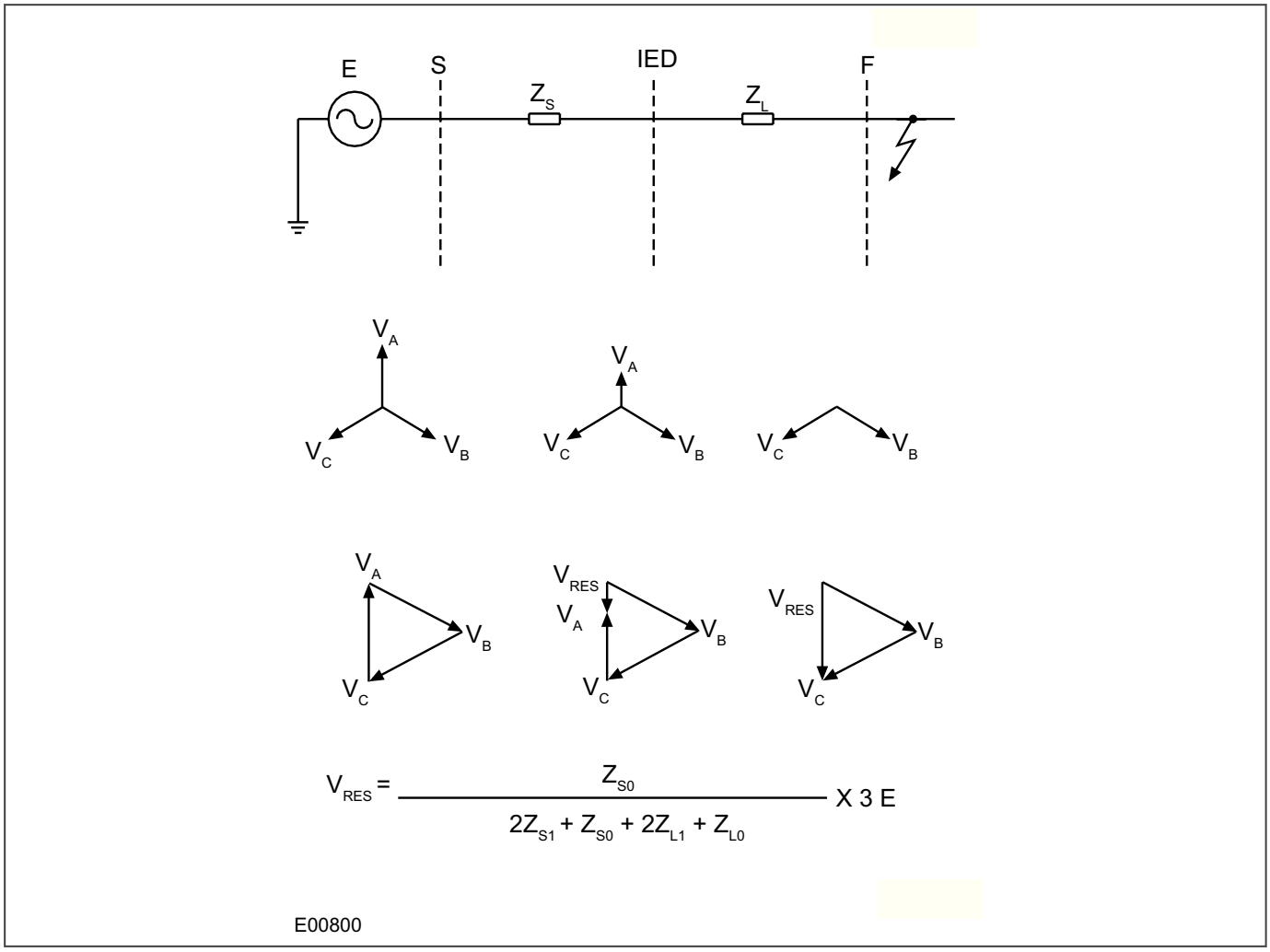

Figure 71: Residual voltage for a solidly earthed system

As can be seen from the above diagram, the residual voltage measured on a solidly earthed system is solely dependent on the ratio of source impedance behind the protection to the line impedance in front of the protection, up to the point of fault. For a remote fault far away, the Z_S/Z_L: ratio will be small, resulting in a correspondingly small residual voltage. Therefore, the protection only operates for faults up to a certain distance along the system. The maximum distance depends on the device setting.

10.4.3.2 CALCULATION FOR IMPEDANCE EARTHED SYSTEMS

Consider a Phase-A to Earth fault on a simple radial system.

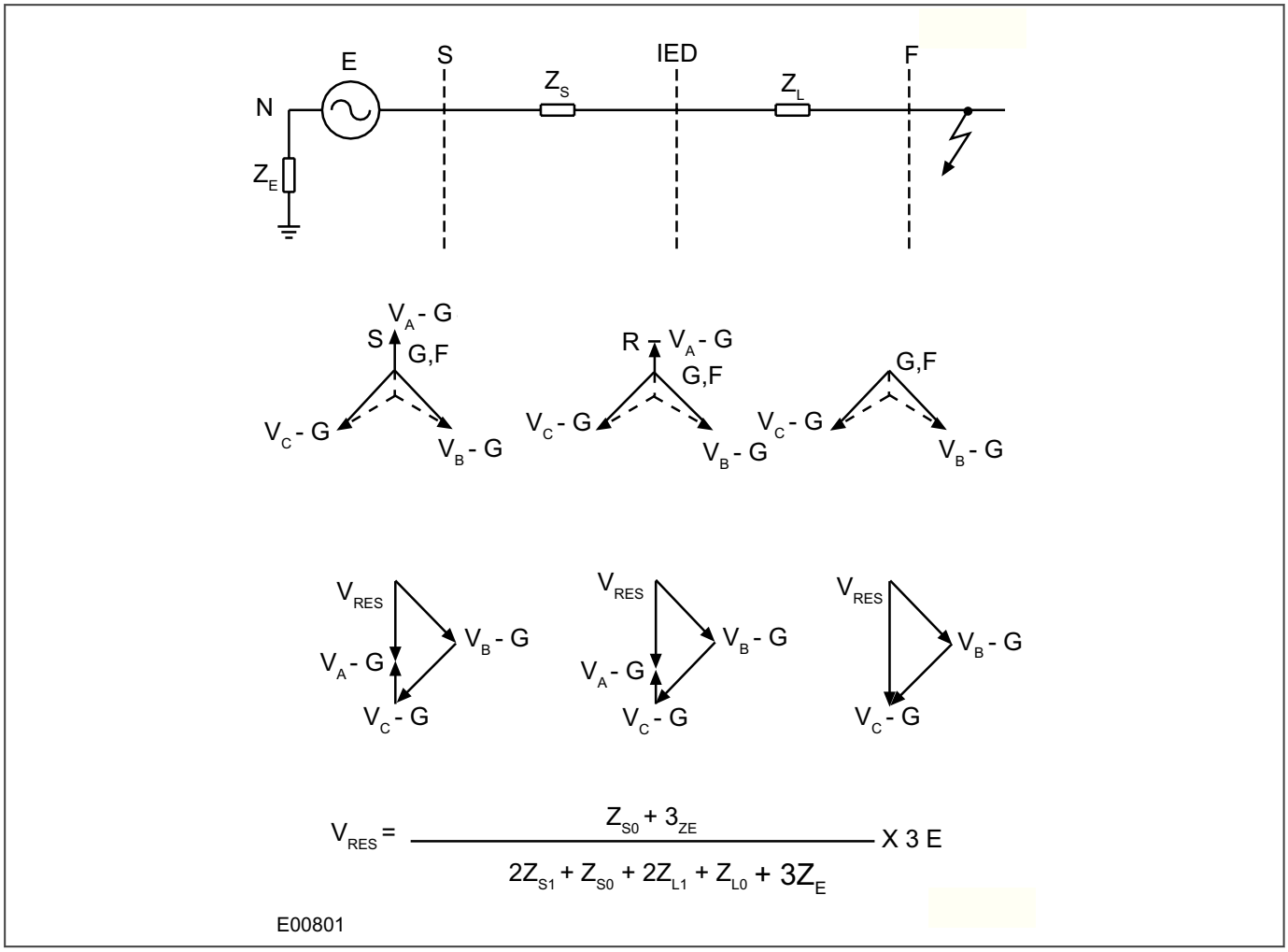

Figure 72: Residual voltage for an impedance earthed system

An impedance earthed system will always generate a relatively large degree of residual voltage, as the zero sequence source impedance now includes the earthing impedance. It follows then that the residual voltage generated by an earth fault on an insulated system will be the highest possible value (3 x phase-neutral voltage), as the zero sequence source impedance is infinite.

10.4.3.3 SETTING GUIDELINES

The voltage setting applied to the elements is dependent on the magnitude of residual voltage that is expected to occur during the earth fault condition. This in turn is dependent on the method of system earthing employed.

Also, you must ensure that the protection setting is set above any standing level of residual voltage that is present on the system.

10.5 NEGATIVE SEQUENCE OVERVOLTAGE PROTECTION

Where an incoming feeder is supplying rotating plant equipment such as an induction motor, correct phasing and balance of the supply is essential. Incorrect phase rotation will result in connected motors rotating in the wrong direction. For directionally sensitive applications, such as elevators and conveyor belts, it is unacceptable to allow this to happen.

Imbalances on the incoming supply cause negative phase sequence voltage components. In the event of incorrect phase rotation, the supply voltage would effectively consist of 100% negative phase sequence voltage only.

10.5.1 NEGATIVE SEQUENCE OVERVOLTAGE IMPLEMENTATION

Negative Sequence Overvoltage Protection is implemented under the path ***SETPOINTS\PROTECTION\GROUP [1-6]\VOLTAGE PROT\NEG SEQ OV***.

The device includes one Negative Phase Sequence Overvoltage element with multiple stages. Only Definite time is possible.

This element monitors the input voltage rotation and magnitude (normally from a bus connected voltage transformer) and may be interlocked with the motor contactor or circuit breaker to prevent the motor from being energised whilst incorrect phase rotation exists.

The element is enabled using the ***V2>1 Function*** setting.

10.5.2 NEGATIVE SEQUENCE OVERVOLTAGE LOGIC

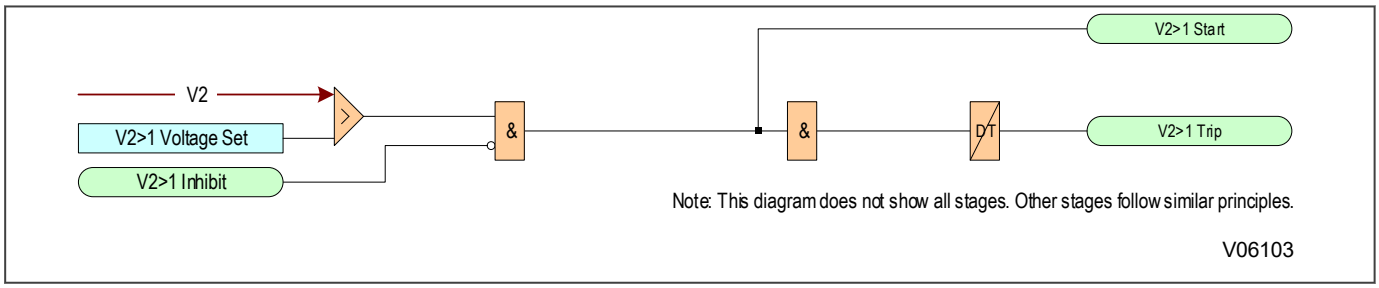

Figure 73: Negative sequence overvoltage logic

The Negative Voltage Sequence Overvoltage module detects when the voltage magnitude exceeds a set threshold. When this happens, the comparator output Overvoltage Module produces a ***Start*** signal (e.g. for stage 1: ***V2>1 Start***), which signifies the "Start of protection". This can be blocked by a ***V2>1 Inhibit*** signal. This ***Start*** signal is applied to the DT timer module. The output of the DT timer module is the trip signal which is used to drive the tripping output relay.

10.5.3 APPLICATION NOTES

10.5.3.1 SETTING GUIDELINES

The primary concern is usually the detection of incorrect phase rotation (rather than small imbalances), therefore a sensitive setting is not required. The setting must be higher than any standing NPS voltage, which may be present due to imbalances in the measuring VT, device tolerances etc.

A setting of approximately 15% of rated voltage may be typical.

> *Note:*
> *Standing levels of NPS voltage (V2) are displayed in the **V2 Magnitude** setting under MEASUREMENTS.*

The operation time of the element depends on the application, but a typical setting would be in the region of 5 seconds.

10.6 POSITIVE SEQUENCE UNDERVOLTAGE PROTECTION

10.6.1 POSITIVE SEQUENCE UNDERVOLTAGE IMPLEMENTATION

Positive Sequence Undervoltage Protection is implemented under the path ***SETPOINTS\PROTECTION\GROUP [1-6]\VOLTAGE PROT\POS SEQ UV***.

The product provides Positive Sequence Undervoltage protection with independent time delay characteristics.

Each stage provides a choice of operate characteristics, where you can select between:

- An IDMT characteristic
- DT (Definite Time)

You set this using the ***V1<1 Curve***

The IDMT characteristic is defined by the following formula:

$$T = TMS/(1 - V/Vpkp)$$

where:

- T = Operating time in seconds
- TMS = Time Multiplier Setting
- V = Measured positive sequence voltage
- Vpkp = Undervoltage Pickup Level

Additional stages are included in order to provide multiple output types, such as alarm and trip stages.

10.6.2 POSITIVE SEQUENCE UNDERVOLTAGE LOGIC

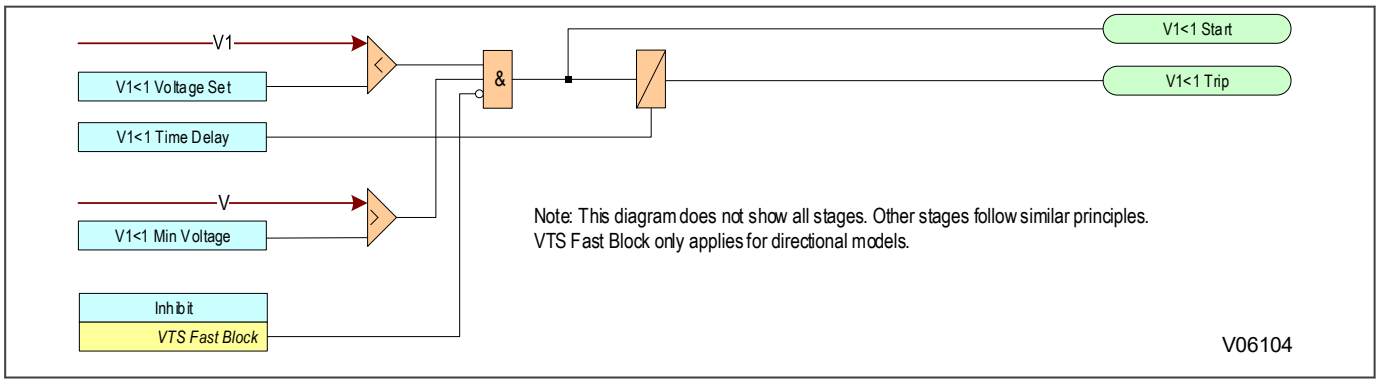

Figure 74: Positive sequence undervoltage logic

10.7 POSITIVE SEQUENCE OVERVOLTAGE PROTECTION

10.7.1 POSITIVE SEQUENCE OVERVOLTAGE IMPLEMENTATION

Positive Sequence Overvoltage Protection is implemented under the path ***SETPOINTS\PROTECTION\GROUP [1-6]\VOLTAGE PROT\POS SEQ OV***

The product provides Positive Sequence Overvoltage protection with independent time delay characteristics.

Each stage provides a choice of operate characteristics, where you can select between:

- An IDMT characteristic
- DT (Definite Time)

You set this using the ***V1>1 Curve*** setting.

The IDMT characteristic is defined by the following formula:

$$T = \frac{TMS}{\left(\frac{V}{V_{pickup}} - 1\right)}$$

where:

- T = operate time (in seconds)
- TMS = Time Multiplier setting
- V = measured positive sequence voltage
- Vpickup = Pickup Voltage setting

Multiple stages are included in order to provide multiple output types, such as alarm and trip stages.

10.7.2 POSITIVE SEQUENCE OVERVOLTAGE LOGIC

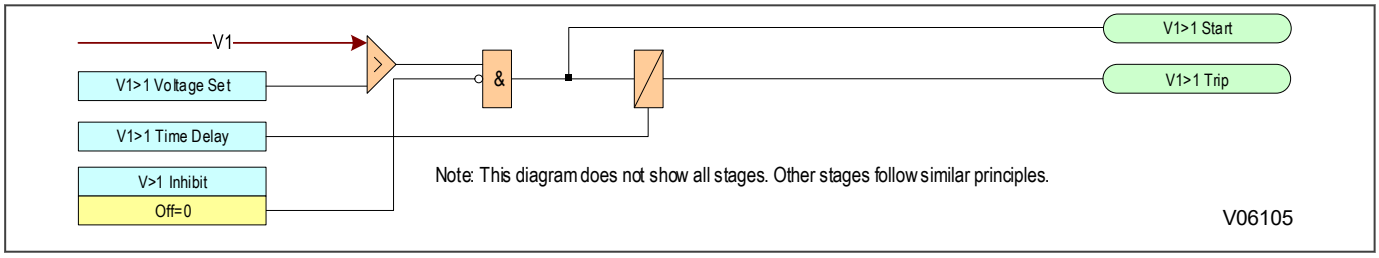

Figure 75: Positive sequence overvoltage logic

10.8 VOLTS PER HERTZ

10.8.1 VOLTS PER HERTZ IMPLEMENTATION

The volts-per-hertz (V/Hz) value is calculated using the maximum of the three-phase voltage inputs. If there is no voltage on the relay terminals, the V/Hz value is automatically set to "0". The V/Hz value is established as per voltage and nominal frequency power system settings as follows:

V/Hz is based on the selected Setpoint > System > VT Ratio > ***Main VT Secondary*** setting, and the Setpoint > System > Power System > ***Nom. Frequency*** setting.

For example, if ***Main VT Secondary*** and ***Nominal Frequency*** are set as 120 V and 60 Hz, respectively, these set values define the base unit as 1 x (V/Hz). The volts-per-hertz ratio after division of these nominal settings is 120/60 = 2. If the ***Pickup*** setpoint from the V/Hz element is set to "1.05 x (V/Hz)", will mean that in order for the element to pick up, the actual volts-per-hertz ratio after division should be 2 *1.05 = 2.1. The ratio of 2.1 can be achieved if for example the measured voltage is 126V and frequency is 60 Hz, or the voltage is constant at 120 V and the frequency is 57.14 Hz, or any other combination of these two values, which after V/Hz division equals 2.1. To check back the pickup setting, we use the base (V/Hz) unit = 120/60 = 2, such that the pickup setting value is 2.1/2 = 1.05 x (V/Hz).

If the ***Phase VT Input*** is selected as "Star", then the ***V/Hz>[X] Meas Mode*** setting further defines the operating quantity and per-unit value for this element. If the voltage measuring mode is set as "Phase-phase", then the operating quantity for this element will be phase-to-phase nominal voltage. Likewise, if the voltage measuring mode is set to "Phase-ground", then the operating quantity for this element will be the phase-to-ground nominal voltage. It is beneficial to use the phase-to-phase voltage mode for this element when the relay is applied on an isolated or resistance-grounded system. If the ***Phase VT Input*** is selected as "Delta", then the phase-to-phase nominal voltage is used to define the per-unit value, regardless of the ***V/Hz>[X] Meas Mode*** selection.

The V/Hz element may be used as an instantaneous element with no intentional time delay or as a Definite or Inverse timed element. The characteristics of the inverse curves are shown below:

Definite Time

For the definite time curve, operating time is configured using the ***V/Hz>1 TimeDelay*** setting. Instantaneous operation can be obtained by setting the ***V/Hz>1 TimeDelay*** to "0".

Inverse Curve A:

The curve for the Volts/Hertz Inverse Curve A shape is derived from the formula:

$$T = \frac{TMS}{\left[\left(\frac{V}{(Hz)}\right) / Pickup\right]^2 - 1} \quad when \frac{V}{F} > Pickup$$

Inverse Curve B:

The curve for the Volts/Hertz Inverse Curve B shape is derived from the formula:

$$T = \frac{TMS}{\left[\left(\frac{V}{(Hz)}\right) / Pickup\right] - 1} \quad when \frac{V}{F} > Pickup$$

Inverse Curve C:

The curve for the Volts/Hertz Inverse Curve C shape is derived from the formula:

$$T = \frac{TMS}{\left[\left(\frac{V}{(Hz)}\right) / Pickup\right]^{1/2} - 1} \; when \frac{V}{F} > Pickup$$

Where:

T = Operating Time

TMS = Time Multiplier setting (delay in seconds)

V = Fundamental RMS value of voltage

F = Frequency of voltage signal

Pickup = V/Hz>[X] Set setting

The element has a linear reset characteristic. The reset time can be programmed using ***V/Hz>[X] tReset*** setting to match the cooling characteristics of the protected equipment. The element will fully reset from the trip threshold in Reset Time seconds.

10.8.2 VOLTS PER HERTZ LOGIC

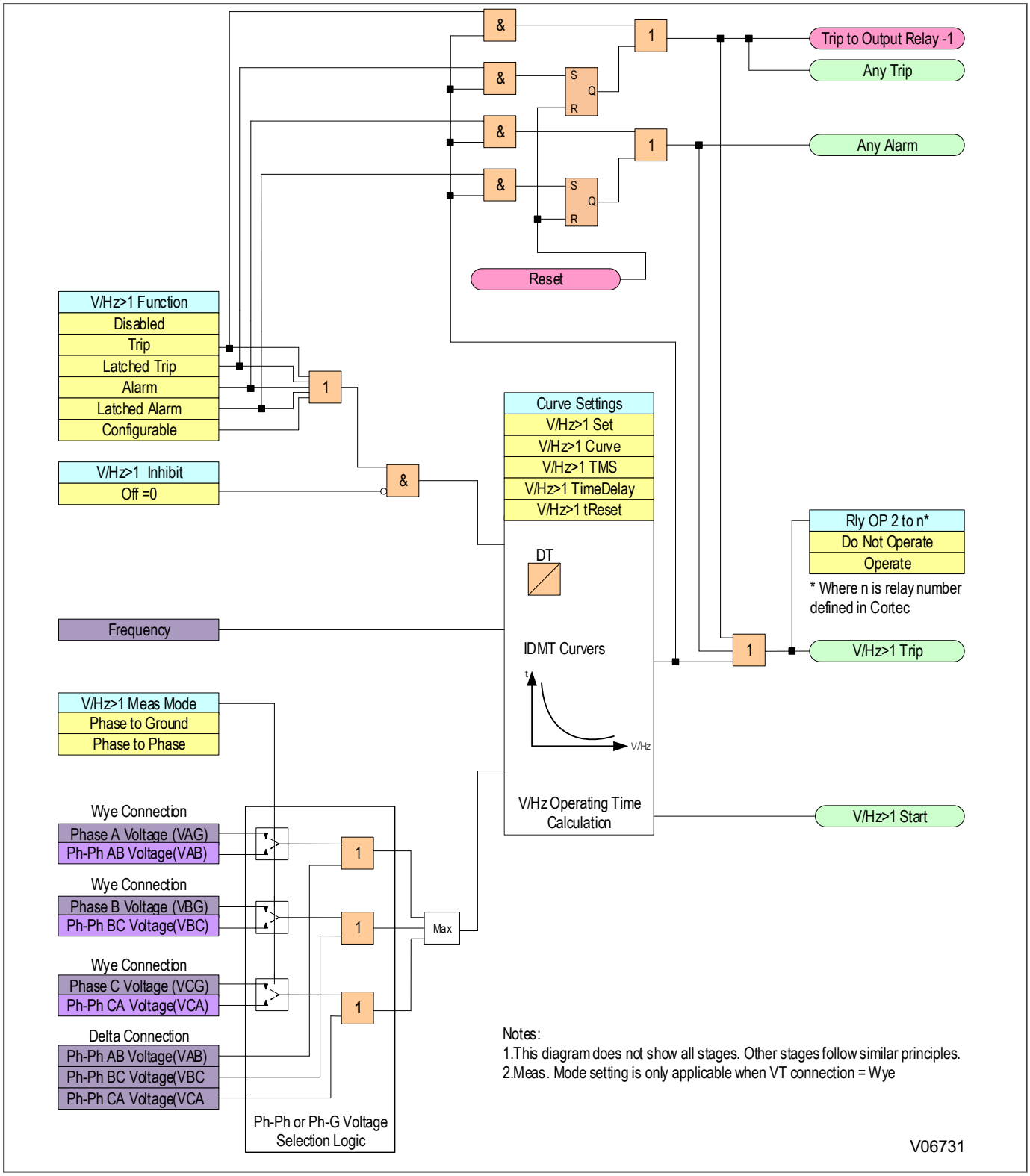

Figure 76: Volts per Hertz logic

10.9 UV REACTIVE POWER

More and more distributed energy resources (DER) are fitted in the MV grid. The amount of controllable power reserve (active and inductive reactive power) by means of large-scale conventional plants is decreasing. Reactive power is used to maintain mains voltage stability. Faults in the grid, increasing load with reactive power requirements and changes within the network may lead to mains voltage drops. In the event of severe voltage drops in several grid sections, such voltage instability may cause a collapse of the mains voltage by means of cutting the power supply (blackout).

Protection equipment is of considerable importance for secure and reliable operation of networks, connection facilities and generating plants. National grid codes and regulations require that DER units feeding into MV grid must support the mains voltage of a network failure. Therefore, the purpose of voltage and frequency protection units at machine level is to disconnect the generating units from the grid in case of faults. If a voltage drops and an inductive, reactive power flow in the direction towards the generating unit are detected at the network connection point simultaneously, then the affected generating unit will be switched off (disconnecting the generator circuit breaker). After an unsuccessful attempt to disconnect the generating unit, the whole DER plant will be switched off by the circuit breaker at the network connection point.

10.9.1 UV REACTIVE POWER IMPLEMENTATION

UV Reactive Power element comprises of protection function and generating unit restoration function.

Protection Function

UV reactive power protection function operates after a settable ***Time Delay*** as soon as:

- All the phase voltages fall below the set voltage level, programmed as ***Voltage Set***, and
- the measured positive sequence current I1 exceeds the current supervision level, programmed as Curn. Sup. Level, and
- the measured reactive power exceeds the level programmed as ***Vars Set***.

Restoration Function

The restoration function can send the closing command to the generating unit CB when:

- All the phase voltages are above the minimum voltage level, programmed as ***Min Voltage***, and
- frequency is within the minimum and maximum frequency range, programmed as ***Min Frequency*** and ***Max Frequency*** respectively, and
- if ***CS Supervision*** not bypassed, it permits the closing of the breaker by asserting CS 1 Close Perm operand.

The mains voltage may not necessarily have measured at the network connection point. According to the above-mentioned protective functions, reclosing of the generator CB shall only take place after the set time delay programmed as ***Restore Delay***.

In so far as the DER is disconnected from the grid at the network connection point, the individual generating units are shut down too. Consequently, reclosing of the CB at the network connection point does not require any mains voltage measurement. Reclosing is done manually.

If the ***Phase VT Input*** is selected as "Star", then the Meas Mode setting further defines the operating quantity and per-unit value for this element. If the voltage measuring mode is set as "Phase-phase", then the operating quantity for this element will be phase-to-phase. Likewise, if the voltage measuring mode is set to "Phase-ground", then the operating quantity for this element will be the phase-to-ground. If the ***Phase VT Input*** is selected as "Delta", then the phase-to-phase voltage is used, regardless of the ***Meas Mode*** selection.

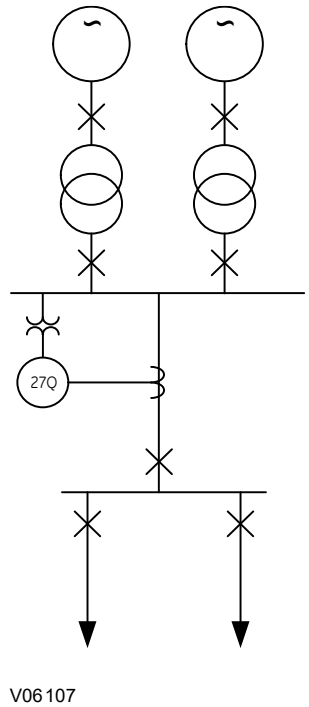

Figure 77: Figure: Example of UV reactive power (27 Q) applied for generating feeder

10.9.2 UV REACTIVE POWER LOGIC

27Q protection function is supervised by the minimum positive sequence current level that inhibits this element if it is below the ***Curn. Sup. Level***. As soon as the voltage falls below the ***Voltage Set*** level and positive sequence current exceeds the ***Curn. Sup. Level*** and reactive power exceeds the ***Vars Set*** level, the UV Reactive Protection pickups.

The flow direction of the watts(P) and Vars(Q) are specified by the ***Var Direction*** during normal and fault situations, as seen from the grid or generator viewpoint.

When ***Var Direction*** is programmed as Forward:

- During normal operation P > 0 and Q > 0, which means generator delivers active and inductive reactive power to the grid.
- During fault situation P > 0 and Q < 0, which means generator delivers active power to the grid and takes the inductive reactive power of the grid. Protection trips, if reactive power measurement value is negative (Q < 0) and the absolute value of measured reactive power exceeds the level programmed as ***Vars Set***.

When ***Var Direction*** is programmed as Reverse:

- During normal operation P < 0 and Q < 0, which means grid takes active and inductive reactive power of the generator.
- During fault situation: P < 0/P > 0 and Q > 0, which means grid takes/delivers the active power of/to the generator and grid delivers inductive reactive power to the generator. Protection trips, if reactive power measurement value is positive (Q > 0) and the absolute value of measured reactive power exceeds the level programmed as ***Vars Set***.

27Q restoration function can be enabled by the ***Restore Function*** setting. Reclose signal is directly mapped to CB Control when ***Restore Function*** is configured as Close. Reclosing of the generator circuit breaker requires that the voltage measurement at the network connection point must exceed the ***Min Voltage*** level and the frequency measurement must lie within the band defined by the ***Min Frequency*** and ***Max Frequency***.

Once circuit breaker restore command is initiated by the 27Q restoration function, it gets reset if current becomes greater than the ***Min Current*** level or new restoration process initiates. The initiation of the generating unit CB re-closing can be achieved by following two means:

- 27Q element undervoltage protection function can be used to initiate the restoration process when setting ***27Q Initiate*** is programmed to 'ON'. CB re-closing is initiated when 27Q undervoltage trip (operand UV Var Trip) gets reset.
- CB reclosing can also be initiated by detecting the dropping of assigned input (e.g. trip) specified by the setting ***Restore Initiate***. If more than one input is required to initiate the restoration function, then the logic builder must be used to build the required logic.

When any of the restore initiation inputs (assigned input or UV Var Trip operand) drops to zero, it will start the ***Restore Delay*** timer and release the command to re-close the generating unit CB. However, if the assigned input or UV Var Trip becomes active, the ***Restore Delay*** timer resets and the restoring release deactivates.

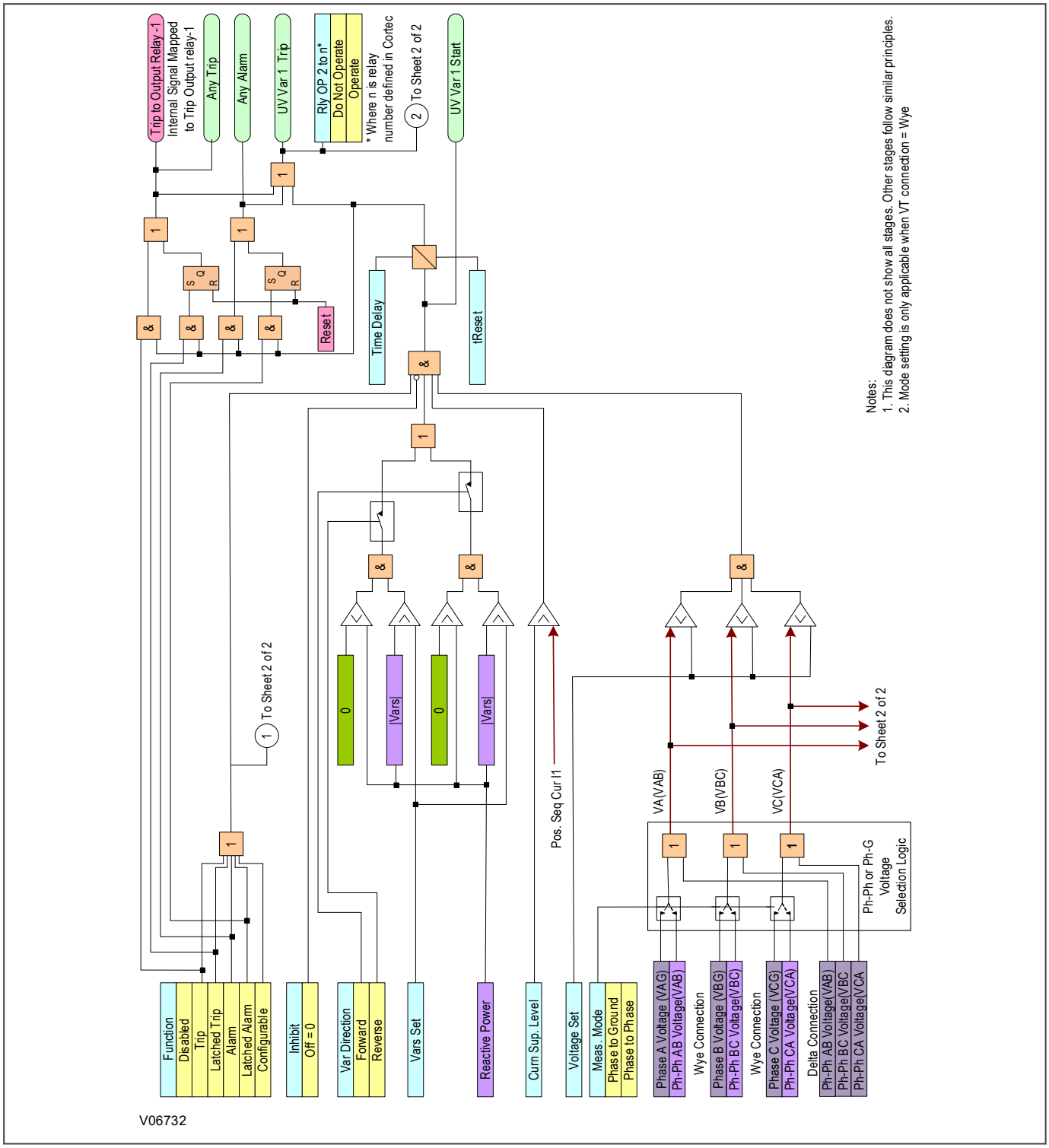

Figure 78: UV reactive power logic - page 1

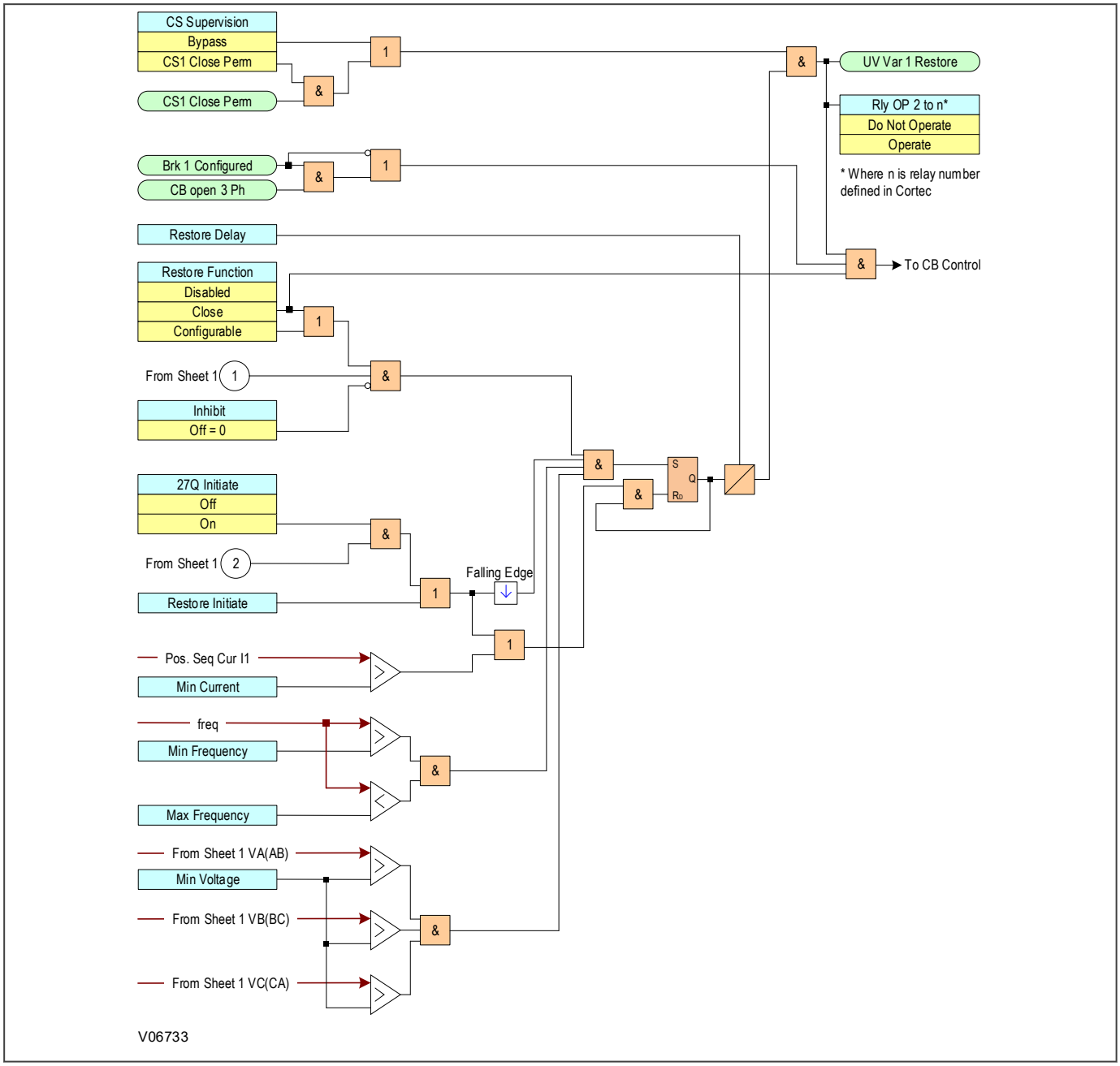

Figure 79: UV reactive power logic - page 2

10.10 TIMED UNDERVOLTAGE PROTECTION (27T)

In certain regions of the world, the power plants must meet certain requirements of grid support. In case of a voltage drop, the power plants are sometimes required to continue supporting the grid and not be disconnected from the grid. Therefore, a conventional phase undervoltage protection may not be adequate for such scenarios.

> *Note:*
> *When no voltage measurement is possible, caused by the location of the VTs down from the circuit breaker and the CB being open, the 27T protection must be blocked.*

10.10.1 TIMED UNDERVOLTAGE IMPLEMENTATION

The Multilin Agile relay provides four Timed Phase Undervoltage (UV) protection elements per protection group. This element may be used for protection against transient voltage drops and low voltage ride through applications.

The Timed Undervoltage element can be set as a time dependent element which can be programmed with ten configurable points (***V<[X] Curve Lmt, V<[X] Curve Time***) that make up its characteristics curve. The configurable curve allows the relay to continue the grid support for brief voltage drops and operate for voltage drops that enter the operate region of the configurable curve. Additionally, the element provides a counter-based protection which counts the number of transient voltage drops and trips according to the provided threshold for the given time window. This counter-based logic is functional only if the overall element is enabled using setting ***V<[X] Function***. The counter mode can be enabled/disabled using setting ***V<[X] Counter Mode*** and it runs in parallel to the configurable characteristics-based protection. If the number of transient voltage drops exceeds the ***V<[X] Volt. Drops*** within the time ***V<[X]Time VoltDrop***, a trip is issued.

If the ***Phase VT*** Input is selected as "Star", then the ***V<[X] Meas Mode*** setting further defines the operating quantity and per-unit value for this element. If the voltage measuring mode is set as "Phase to Phase", then the operating quantity for this element will be phase-to-phase. Likewise, if the voltage measuring mode is set to "Phase-ground", then the operating quantity for this element will be the phase-to-ground. If the ***Phase VT Input*** is selected as "Delta", then the phase-to-phase voltage is used, regardless of the ***V<[X] Meas Mode*** selection.

The settings of this function are applied to each of the three voltage inputs to produce pickup and trip flags per voltage input. Using setting ***V<[X] Operate Mode*** number of voltages can be specified for operation of the 27T function. The Timed UV Start flag is asserted, when the measured voltage is below the PKP value and deserted when it reaches above the dropout level. The Timed UV Trip flag is asserted if the element stays picked up for the time defined by curve, and number of voltages required for operation matches the number of voltages selected in the setting.

The Timed Undervoltage element has programmable minimum operating threshold ***V<[X] Voltage Set*** to prevent some undesired operation when voltage is not available. The input voltages are the three phase to phase voltages from delta connected VTs (PTs) or three phase to ground voltages from wye connected VTs (PTs).

The minimum voltage setting selects the operating voltage below which the element is blocked.

10.10.2 TIMED UNDERVOLTAGE LOGIC

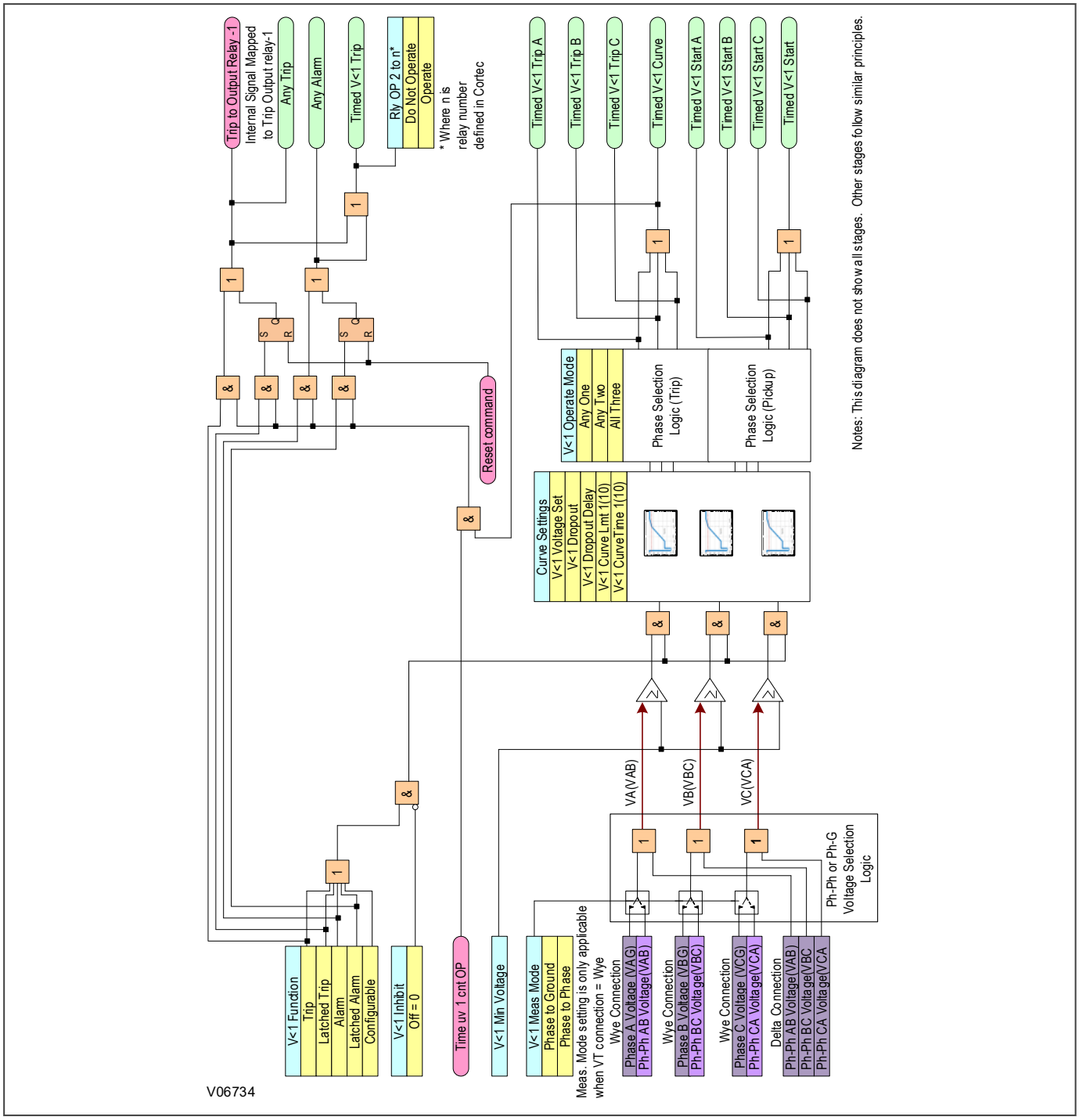

Figure 80: Timed undervoltage protection logic - page 1

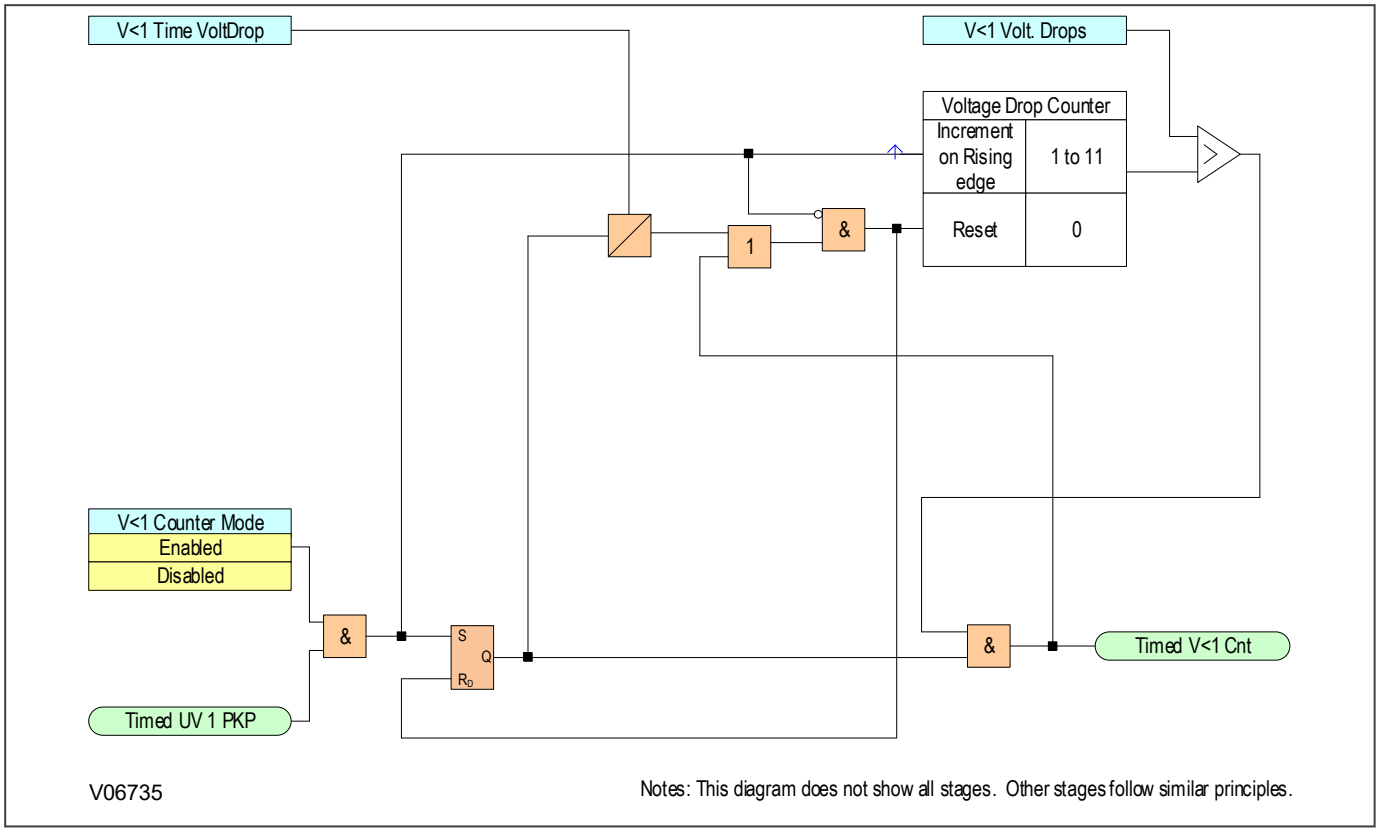

Figure 81: Timed undervoltage protection logic - page 2

10.10.3 SETTING GUIDELINES

V<[X] Voltage Set setting specifies the pickup level as percent of VT. For example, a Pickup setting of 0.90xVT with 13800:115 VT translates into 12.42kV (or 103.5V secondary). If the mode selection is Phase to phase and setpoint Phase VT Input selection is Star, the previous example will translate to the phase-to-phase voltage value of 12.42kV x 1.732 = 21.51kV.

The counter mode can be enabled/disabled using setting ***V<[X] Counter Mode*** and it runs in parallel to the configurable characteristics-based protection. With counter mode enabled, the user can define the number of tolerated voltage drops specified by setting ***V<[X] Volt. Drops*** and the total time window specified by setting ***V<[X] Time Volt. Drops*** for which these voltage drops are allowed.

V<[X] Volt. Drops setting can be coordinated with recloser shot settings. This setting is only functional if the ***V<[X] Counter Mode*** setting is set to Enabled.

V<[X] Time Volt. Drops setting indicates the total time window for which a set number of voltage drops are allowed before the element issues a time-independent undervoltage trip. If the number of transient voltage drops exceeds the defined setting within the time defined for the voltage drops, a time-independent undervoltage trip is issued. This is not a sliding time window; the time window jumps from one set of time to the next. This setting is only functional if the Counter Mode setting is set to Enabled.

10.11 MOVING AVERAGE OVERVOLTAGE PROTECTION

Moving average voltage functions available for Multilin Agile are:

- Overvoltage (Vavg>)

The moving average overvoltage function calculates the average of the phase voltage over a configurable amount of time (10 minutes by default). The measurements are RMS. If the ***Ph VT Input*** is set as Delta, then the phase overvoltage function calculates the average of phase-to-phase voltages rather than phase-to-ground voltages calculated when set to Wye.

The voltage is sampled at 5 Hz or 6 Hz (one sample every 200 ms for a 50 Hz system, one sample every 166,67 ms for a 60 Hz system). The refresh period is 3 seconds. The average voltages for the previous ***Total Average Time*** (10 minutes by default) are calculated, displayed as measurements, and used as energising quantities for the protection functions.

The following quantities are provided as measurements:

Ph VT Input selected as "Star":

VAN Mov Average: Phase A RMS average voltage

VBN Mov Average: Phase B RMS average voltage

VCN Mov Average: Phase C RMS average voltage

Ph VT Input is selected as "Delta":

VAB Mov Average: Phase A to Phase B RMS average voltage

VBC Mov Average: Phase B to Phase C RMS average voltage

VCA Mov Average: Phase C to Phase A RMS average voltage

Note:
Ph VT Input *selection for "Star" or "Delta" can be done in* ***SETPOINT\SYSTEM\VT RATIO*** *path.*
Moving Average Voltage measurements can be found at ***MEASUREMENTS\MOV AVG VOLTAGE*** *path.*

10.11.1 MOVING AVERAGE OVERVOLTAGE PROTECTION IMPLEMENTATION

Moving Average Overvoltage Protection is implemented under the path ***SETPOINTS/PROTECTION/GROUP [1-6]/ VOLTAGE PROT/MOV AVG VOLTAGE.***

The product provides two overvoltage stages with independent settings.

Both stages share a common ***Tot Avg Time*** setting for measurements calculation.

The overvoltage stages can be configured either for single, double, or three-phase conditions via the ***Vavg>(n) Oper Mode*** setting for each stage.

10.11.2 MOVING AVERAGE OVERVOLTAGE PROTECTION LOGIC

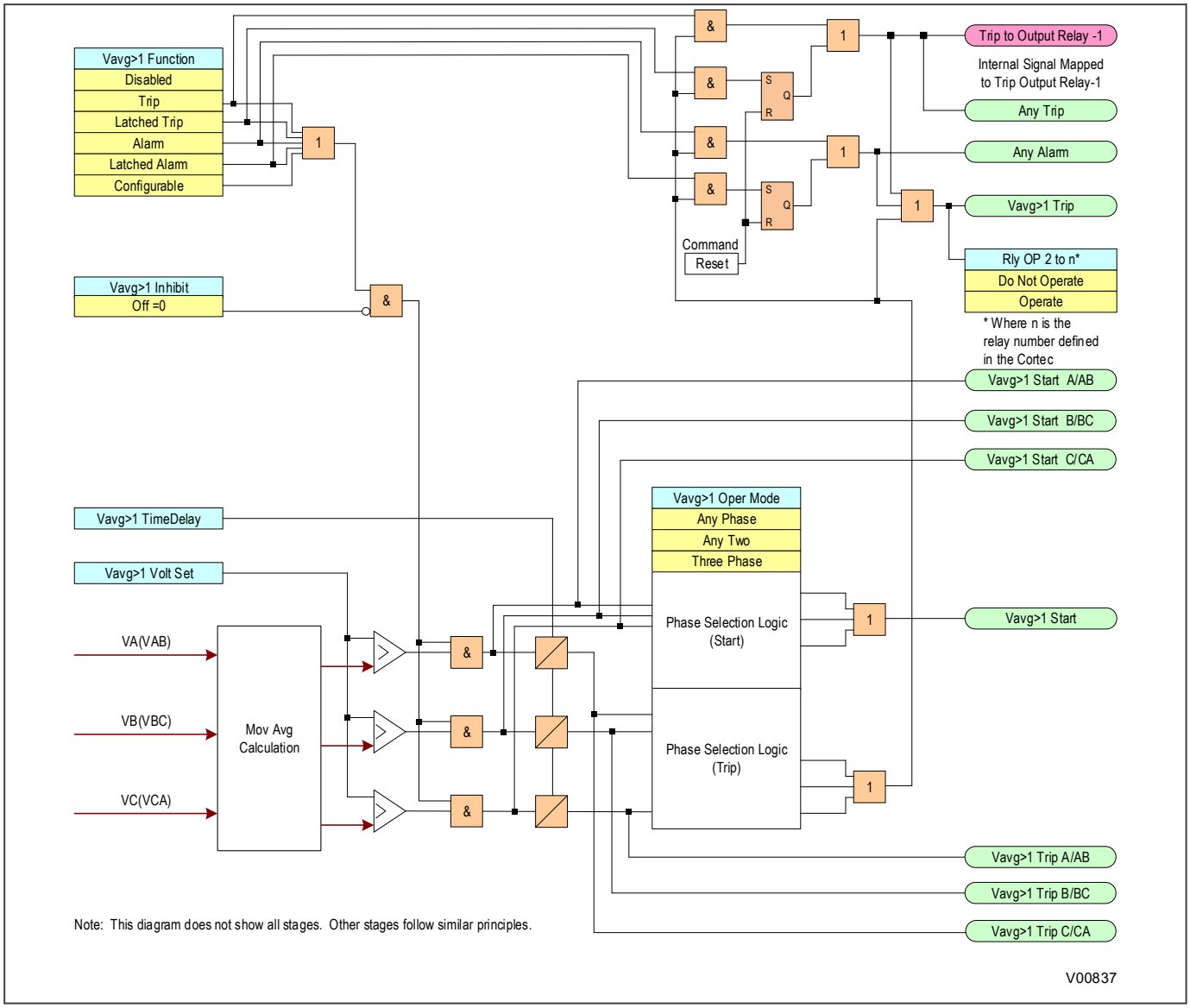

Figure 82: Moving Average overvoltage logic

CHAPTER 11

FREQUENCY PROTECTION FUNCTIONS

11.1 CHAPTER OVERVIEW

The device provides a range of frequency protection functions. This chapter describes the operation of these functions including the principles, logic diagrams and applications.

This chapter contains the following sections:

Chapter Overview 197

Frequency Protection Overview 198

Underfrequency Protection 199

11.2 FREQUENCY PROTECTION OVERVIEW

Power generation and utilisation needs to be well balanced in any industrial, distribution or transmission network. These electrical networks are dynamic entities, with continually varying loads and supplies, which are continually affecting the system frequency. Increased loading reduces the system frequency and generation needs to be increased to maintain the frequency of the supply. Conversely decreased loading increases the system frequency and generation needs to be reduced. Sudden fluctuations in load can cause rapid changes in frequency, which need to be dealt with quickly.

Unless corrective measures are taken at the appropriate time, frequency decay can go beyond the point of no return and cause widespread network collapse, which has dire consequences.

Protection devices capable of detecting low frequency conditions are generally used to disconnect unimportant loads in order to re-establish the generation-to-load balance. However, with such devices, the action is initiated only after the event and this form of corrective action may not be effective enough to cope with sudden load increases that cause large frequency decays in very short times. In such cases a device that can anticipate the severity of frequency decay and act to disconnect loads before the frequency reaches dangerously low levels, are very effective in containing damage. This is called instantaneous rate of change of frequency protection (ROCOF).

11.2.1 FREQUENCY PROTECTION IMPLEMENTATION

Frequency Protection is implemented under the path ***SETPOINTS\PROTECTION\GROUP [1-6]\FREQUENCY PROT***.

The device includes multiple stages for the following frequency protection methods:

- Underfrequency Protection: abbreviated to F<(n)
- Overfrequency Protection: abbreviated to F>(n)
- Independent Rate of Change of Frequency Protection: abbreviated to df/dt>(n)

Each stage can be disabled or enabled with the ***Function*** setting. The frequency protection can also be blocked by an undervoltage condition if required.

11.2.2 FREQUENCY PROTECTION COMMON SETUP

There are common settings that are applied to Under and Over Frequency elements when the Hi-Speed Frequency is enabled.

Hi-Speed Freq: Enables the Hi-Speed algorithm

Semicycles Set: Number of semi-cycles used for frequency estimation.

Semicycle Reset: Number of semi-cycles used for frequency estimation to evaluate the reset conditions.

11.3 UNDERFREQUENCY PROTECTION

A reduced system frequency implies that the net load is in excess of the available generation. Such a condition can arise, when an interconnected system splits, and the load left connected to one of the subsystems is in excess of the capacity of the generators in that particular subsystem. Industrial plants that are dependent on utilities to supply part of their loads will experience underfrequency conditions when the incoming lines are lost.

Many types of industrial loads have limited tolerances on the operating frequency and running speeds (e.g. synchronous motors). Sustained underfrequency has implications on the stability of the system, whereby any subsequent disturbance may damage equipment and even lead to blackouts. It is therefore essential to provide protection for underfrequency conditions.

11.3.1 UNDERFREQUENCY PROTECTION IMPLEMENTATION

Under Frequency Protection is implemented under the path ***SETPOINTS\PROTECTION\GROUP [1-6]\FREQUENCY PROT.\UNDER FREQUENCY***.

The following settings are relevant for underfrequency:

- ***F<(n) Function***: Determines whether the stage is underfrequency or disabled
- ***F<(n) Freq Set***: Defines the frequency pickup setting
- ***F<(n) Time Delay***: Sets the time delay
- ***F<(n) Freq IP***: Normal or high-speed frequency can be selected as an input to detect under frequency

Note:
*When the source input for tracking frequency differs from that used for the Under Frequency function, due to frequency variations, you may encounter notable voltage measurement errors as the frequency of input signal moves away from the tracking frequency source input. For instance, when the setting '**Frequency Input**' is configured to auxiliary voltage (from the 4th VT), while the tracking frequency comes from the main source's three-phase voltages, any difference between the frequency of the auxiliary voltage (Vx) and the three-phase voltages (3VT) leads to a magnitude measurement error in Vx, caused by the deviation of Vx frequency from the main frequency.*

11.3.2 UNDERFREQUENCY PROTECTION LOGIC

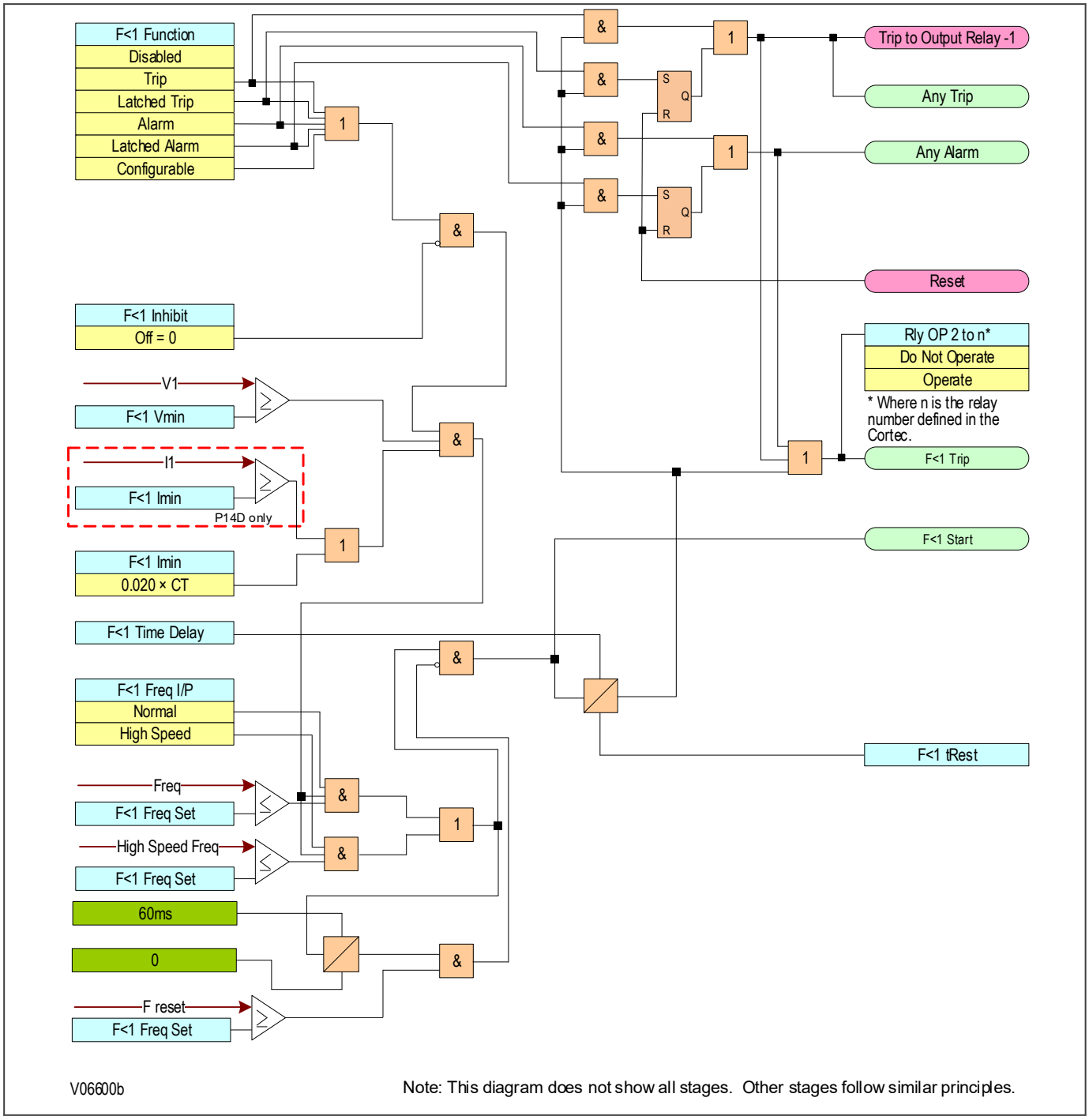

Figure 83: Underfrequency logic (single stage)

If the frequency is below the setting and not blocked the DT timer is started. If the frequency cannot be determined, the function is blocked.

11.3.3 APPLICATION NOTES

11.3.3.1 SETTING GUIDELINES

In order to minimise the effects of underfrequency, a multi-stage load shedding scheme may be used with the plant loads prioritised and grouped. During an underfrequency condition, the load groups are disconnected sequentially, with the highest priority group being the last one to be disconnected.

The effectiveness of each load shedding stage depends on the proportion of power deficiency it represents. If the load shedding stage is too small compared with the prevailing generation deficiency, then there may be no improvement in the frequency. This should be taken into account when forming the load groups.

Time delays should be sufficient to override any transient dips in frequency, as well as to provide time for the frequency controls in the system to respond. These should not be excessive as this could jeopardize system stability. Time delay settings of 5 - 20 s are typical.

An example of a four-stage load shedding scheme for 50 Hz systems is shown below:

Stage	Element	Frequency Setting (Hz)	Time Setting (Sec)
1	F>1 Freq Set	49.0	20 s
2	F>2 Freq Set	48.6	20 s
3	F>3 Freq Set	48.2	10 s
4	F>4 Freq Set	47.8	10 s

The relatively long time delays are intended to provide sufficient time for the system controls to respond. This will work well in a situation where the decline of system frequency is slow. For situations where rapid decline of frequency is expected, this load shedding scheme should be supplemented by rate of change of frequency protection elements.

11.3.3.2 FAST UNDERFREQUENCY

Frequency variations originate from unbalance conditions between generation and load. The main reasons for this condition are:

- Inadequate load forecast or deficient generation capacity programming
- Busbars, generator group or interconnection feeders trip
- System splits into islands

When the frequency variation is small, the unbalance condition will be corrected by the generator’s regulator. In the case of big frequency variations, the regulator is not able to correct itself, and the frequency value will decrease with the danger of losing generation capacity.

If this underfrequency condition is not corrected, then a general blackout may occur.

In case of a shortage of generation capacity, the only possible way of recovering the stability of the system is through a selective load shedding scheme. The load disconnection is done when the frequency goes down below certain thresholds in order to provide adequate reaction time for the generators to recover via their speed regulators.

It is important to point out that when the frequency decreases quickly, the relays operation, based on the detection of the underfrequency condition may not be enough to recover stability. In this case, the load shedding scheme must also take into account the rate of change of frequency. This is done by calculating the frequency derivative over time. Loads are "shed" based not only on an absolute (static) underfrequency threshold, but also on the dynamic rate of change of frequency.

The Fast Underfrequency element is mainly used in medium voltage and distribution substations as a selective load shedding scheme. By doing so, frequency recovers stability, and ensures that potentially dangerous situations that might affect generators in other parts of the electrical system are avoided.

The Fast Underfrequency element measures frequency by detecting the consecutive voltage zero crossings, and measuring the time between them. The measured frequency has the range between 20 to 70 Hz. The out-of-range measurement will be classified as invalid, which will not affect the behavior of SET and RESET counters. Compared to the regular metered voltage frequency value, the fast frequency has the faster response but lesser accuracy.

11.3.3.2.1 FAST FREQUENCY IMPLEMENTATION

Fast Underfrequency protection is implemented under the path **SETPOINTS\PROTECTION\GROUP [1-6]\FREQUENCY PROT.\FAST UF**.

The Multilin Agile device provides nine Fast Underfrequency protection elements per protection group. All nine elements share a ***common setup*** set of settings, used to establish the base for the frequency input, minimum voltage level and set and reset semi cycles for the frequency calculations common to all elements.

Frequency I/P setting provides selection of the frequency signal source.

Vmin setting sets the minimum voltage for all Fast Underfrequency elements operation specified per times VT. The setpoint prevents incorrect operation if the voltage decreases below the threshold.

If **Setpoints\System\VT Ratio*Ph VT Input*** is delta connected and ***Frequency I/P*** is set to A-3VT, the positive sequence voltage is used as the supervision voltage. In such conditions, the true supervision level would be internally changed to

$1/\sqrt{3}$

of the user setting, since the base of VT here is the phase-phase voltage.

Semicycles Set setting specifies a set counter prior to picking up.

When the frequency is detected to be below the setting (and rate of change is also below the setting if in the df/dt type), the element starts counting how many consecutive half-periods (semicycles) it continues below the setting. If the set counter is reached, the pickup signal of the element is activated, and the element starts the delay timer set independently for each element. However, the invalid frequency measurement will not affect the set counter.

Semicycles Reset setting specifies a reset counter to reset the element.

It is possible that the frequency transiently restores and pickup conditions are not satisfied. The element then freezes the set counter to pick up and starts counting the number of semicycles to reset the element. If the count of semicycles to reset reaches the value set in the setting ***Semicycles Reset***, then the element is reset. On the other hand, if the pickup conditions are satisfied before reset, the element will continue the count of semicycles to set from where it was last left. However, the invalid frequency measurement will not affect the set counter.

Those are the common settings to all Fast Underfrequency elements. The rest of the settings are dedicated to each Fast Underfrequency element.

Function setting determines whether the stage is Disabled or set to Trip, Latched Trip, Alarm, Latched Alarm or Configurable.

Type setting specifies the input to the element. UF Only type uses only the frequency value, and UF and df/dt type considers both frequency and rate of change of frequency (df/dt) as the input.

UF Set setting sets the Underfrequency Pickup level.

df/dt Set setting sets the Rate of Change Pickup level.

Time Delay setting sets the time for the element to operate once the operating conditions are met.

tReset setting sets the time for the element to operate once the reset conditions are met.

Rly OP[X] setting allows the user to select any assignable output relay to operate upon Fast Underfrequency protection operation.

11.3.3.2.2 FAST UNDERFREQUENCY LOGIC

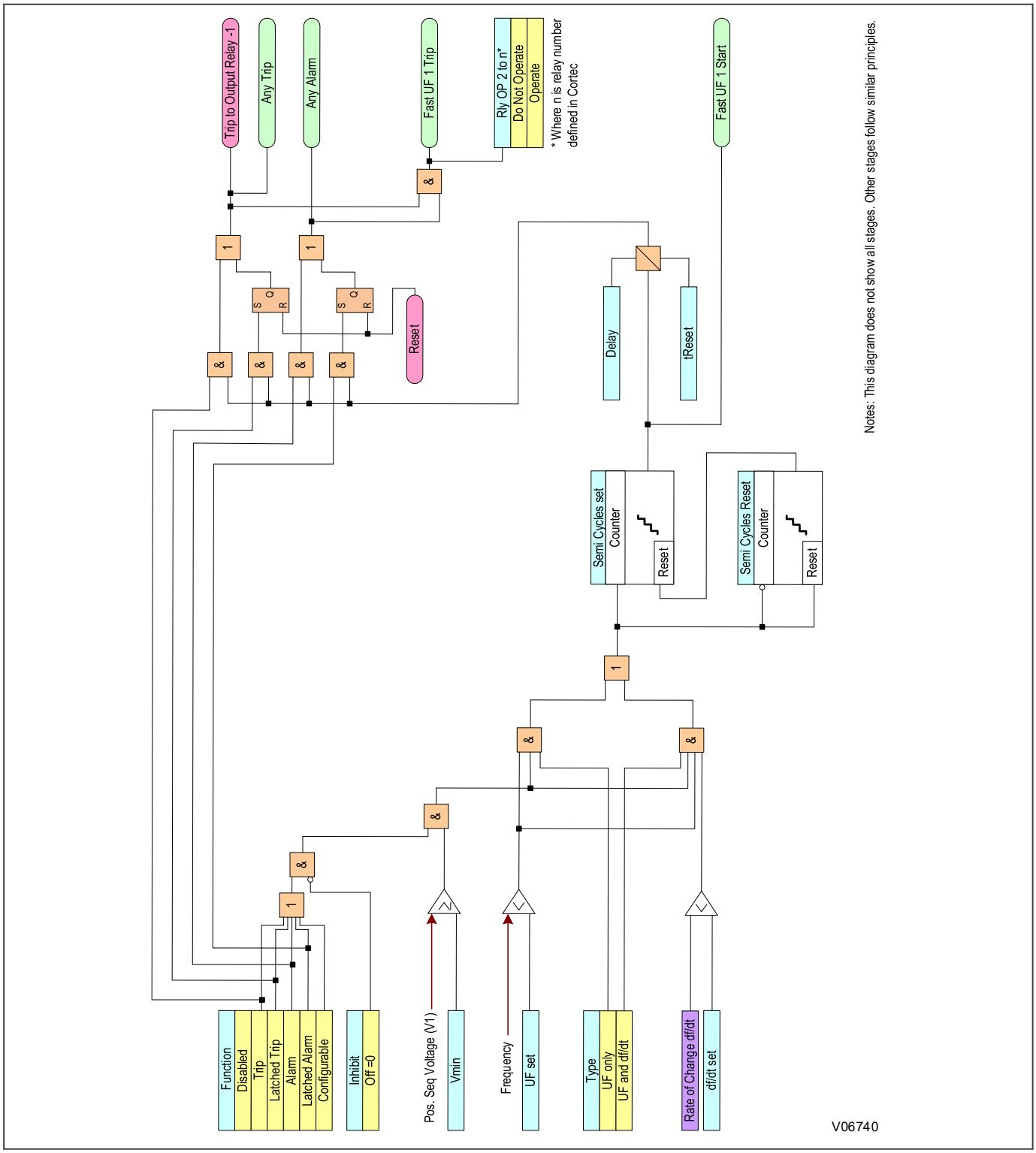

Figure 84: Fast underfrequency logic

11.3.3.3 OVERFREQUENCY PROTECTION

An increased system frequency arises when the mechanical power input to a generator exceeds the electrical power output. This could happen, for instance, when there is a sudden loss of load due to tripping of an outgoing

feeder from the plant to a load centre. Under such conditions, the governor would normally respond quickly to obtain a balance between the mechanical input and electrical output, thereby restoring normal frequency. Overfrequency protection is required as a backup to cater for cases where the reaction of the control equipment is too slow.

11.3.3.3.1 OVERFREQUENCY PROTECTION IMPLEMENTATION

Over Frequency Protection is implemented under the path ***SETPOINTS\PROTECTION\GROUP [1-6]\FREQUENCY PROT.\OVER FREQUENCY***.

The following settings are relevant for overfrequency:

- ***F>(n) Function***: Determines whether the stage is overfrequency or disabled
- ***F>(n) Freq Set***: Defines the frequency pickup setting
- ***F>(n) Time Delay***: Sets the time delay
- ***F>(n) Freq IP***: Normal or high-speed frequency can be selected as an input to detect over frequency

Note:
When the source input for tracking frequency differs from that used for the Over Frequency function, due to frequency variations, you may encounter notable voltage measurement errors as the frequency of input signal moves away from the tracking frequency source input. For instance, when the setting 'Frequency Input' is configured to auxiliary voltage (from the 4th VT), while the tracking frequency comes from the main source's three-phase voltages, any difference between the frequency of the auxiliary voltage (Vx) and the three-phase voltages (3VT) leads to a magnitude measurement error in Vx, caused by the deviation of Vx frequency from the main frequency.

11.3.3.3.2 OVERFREQUENCY PROTECTION LOGIC

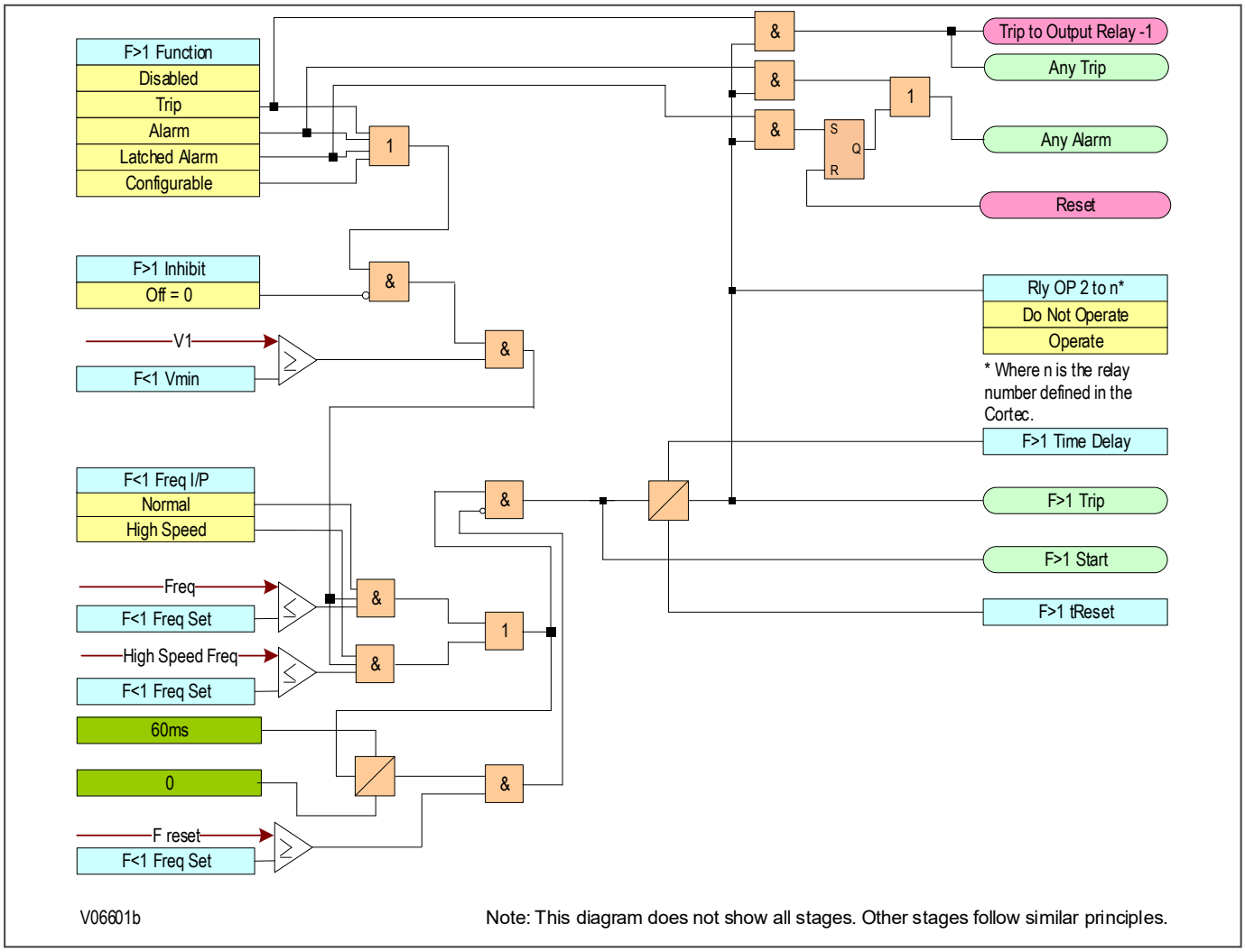

Figure 85: Overfrequency logic (single stage)

If the frequency is above the setting and not blocked, the DT timer is started and after this has timed out, the trip is produced. If the frequency cannot be determined, the function is blocked.

11.3.3.3.3 APPLICATION NOTES

11.3.3.3.3.1 SETTING GUIDELINES

Following changes on the network caused by faults or other operational requirements, it is possible that various subsystems will be formed within the power network. It is likely that these subsystems will suffer from a generation/ load imbalance. The "islands" where generation exceeds the existing load will be subject to overfrequency conditions. Severe over frequency conditions may be unacceptable to many industrial loads, since running speeds of motors will be affected. The overfrequency element can be suitably set to sense this contingency.

An example of two-stage overfrequency protection is shown below using stages 5 and 6. However, settings for a real system will depend on the maximum frequency that equipment can tolerate for a given period of time.

Stage	Element	Frequency Setting (Hz)	Time Setting (Sec.)
1	F>5 Freq Set	50.5	30
2	F>6 Freq Set	51.0	20

The relatively long time delays are intended to provide time for the system controls to respond and will work well in a situation where the increase of system frequency is slow.

For situations where rapid increase of frequency is expected, the protection scheme above could be supplemented by rate of change of frequency protection elements.

In the system shown below, the generation in the MV bus is sized according to the loads on that bus, whereas the generators linked to the HV bus produce energy for export to utility. If the links to the grid are lost, the generation will cause the system frequency to rise. This rate of rise could be used to isolate the MV bus from the HV system.

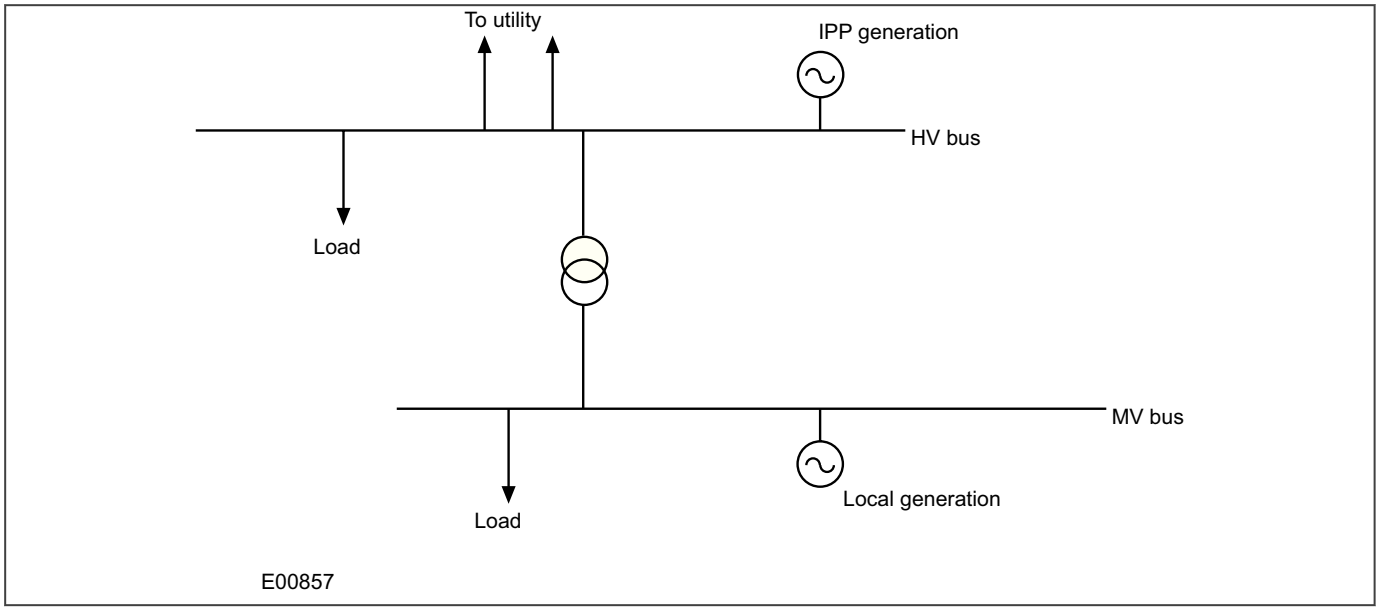

Figure 86: Power system segregation based upon frequency measurements

11.3.3.4 INDEPENDENT R.O.C.O.F PROTECTION

Where there are very large loads, imbalances may occur that result in rapid decline in system frequency. The situation could be so bad that shedding one or two stages of load is unlikely to stop this rapid frequency decline. In such a situation, standard underfrequency protection will normally have to be supplemented with protection that responds to the rate of change of frequency. An element is therefore required which identifies the high rate of decline of frequency, and adapts the load shedding scheme accordingly.

Such protection can identify frequency variations occurring close to nominal frequency thereby providing early warning of a developing frequency problem. The element can also be used as an alarm to warn operators of unusually high system frequency variations.

11.3.3.4.1 INDEPENDENT R.O.C.O.F PROTECTION IMPLEMENTATION

Rate Of Change Of Frequency Protection is implemented under the path ***SETPOINTS\PROTECTION\GROUP [1-6]\FREQUENCY PROT.\ROCOF***,

The device provides independent stages of protection. Each stage can respond to either rising or falling frequency conditions. This depends on whether the df/dt>(n) Dir'n is set to negative or positive or Both. For example, if the trend is set to positive, the rate of change of frequency setting is considered as positive and the element will operate for rising frequency conditions. If the trend is set to negative, the element will operate for falling frequency conditions.

The following settings are relevant for df/dt protection:

- ***df/dt>(n) Dir'n***: determines whether the stage is for falling or rising frequency conditions
- ***df/dt>(n) Set***: defines the rate of change of frequency pickup setting
- ***df/dt>(n) Delay***: sets the time delay

11.3.3.4.2 INDEPENDENT R.O.C.O.F PROTECTION LOGIC

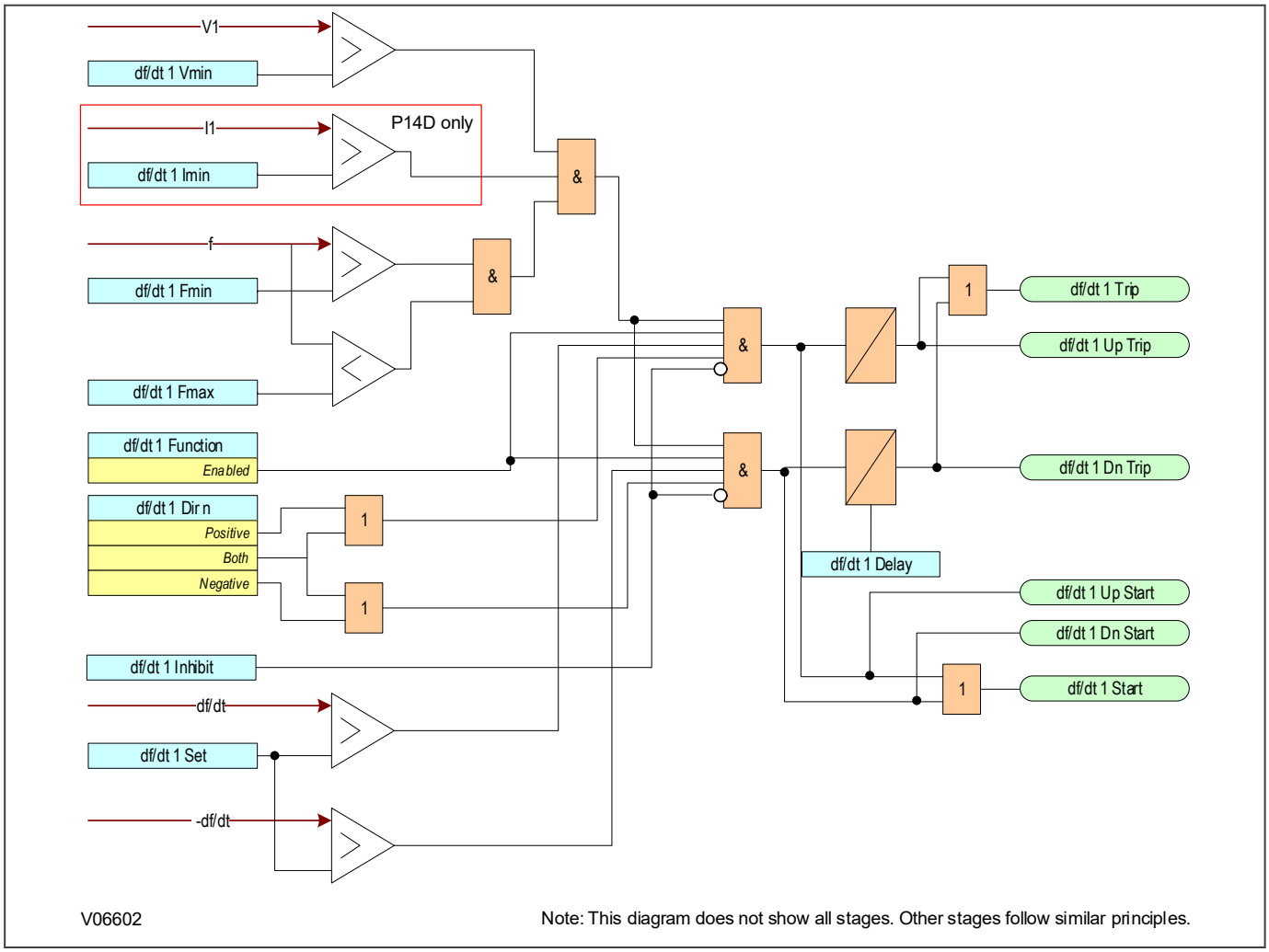

Figure 87: Independent rate of change of frequency logic (single stage)

11.3.3.4.3 APPLICATION NOTES

11.3.3.4.3.1 SETTING GUIDELINES

Considerable care should be taken when setting this element because it is not supervised by a frequency setting. Setting of the time delay will improve stability but this is traded against reduced tripping times.

It is likely that this element would be used in conjunction with other frequency based protection elements to provide a scheme that accounts for severe frequency fluctuations. An example scheme is shown below:

Stage	Rate of Change of Frequency "df/dt [81R]" Elements	
	Rate of Change of Frequency Setting (Hz/Sec.)	Time Setting (Sec.)
1	-	-
2	-	-
3	-3.0	0.5
4	-3.0	0.5
5	-3.0	0.1

In this scheme, tripping of the last two stages is accelerated by using the independent rate of change of frequency element. If the frequency starts falling at a high rate (> 3 Hz/s in this example), then stages 3 & 4 are shed at around 48.5 Hz, with the objective of improving system stability. Stage 5 serves as an alarm and gives operators advance warning that the situation is critical.

CHAPTER 12

POWER PROTECTION FUNCTIONS

12.1 CHAPTER OVERVIEW

Power protection is used for protecting generators. Although the main function of this device is for feeder applications, it can also be used as a cost effective alternative for protecting small distributed generators, typically less than 2 MW.

Power protection applies to the P14D only.

This chapter contains the following sections:

Chapter Overview 210

Overpower Protection 211

Underpower Protection 214

Wattmetric Ground Fault 216

12.2 OVERPOWER PROTECTION

With Overpower, we should consider two distinct conditions: Forward Overpower and Reverse Overpower.

A forward overpower condition occurs when the system load becomes excessive. A generator is rated to supply a certain amount of power and if it attempts to supply power to the system greater than its rated capacity, it could be damaged. Therefore overpower protection in the forward direction can be used as an overload indication. It can also be used as back-up protection for failure of governor and control equipment. Generally the Overpower protection element would be set above the maximum power rating of the machine.

A reverse overpower condition occurs if the generator prime mover fails. When this happens, the power system may supply power to the generator, causing it to motor. This reversal of power flow due to loss of prime mover can be very damaging and it is important to be able to detect this with a Reverse Overpower element.

12.2.1 OVERPOWER PROTECTION IMPLEMENTATION

Overpower Protection is implemented under the path ***SETPOINTS\PROTECTION\GROUP [1-6]\POWER PROT. \OVERPOWER***.

The Overpower Protection element provides two stages of directional overpower for both active and reactive power. The directional element can be configured as forward or reverse and can activate single-phase or three-phase trips.

The elements use three-phase power and single phase power measurements as the energising quantities. A Start condition occurs when measurements exceed the setting threshold. A trip condition occurs if the Start condition is present for the set time delay. This can be inhibited by the VTS Slow Block and Pole Dead logic if desired.

The Start and Trip timer resets if the power falls below the dropout level or if an inhibit condition occurs. The reset mechanism is similar to the overcurrent functionality for a pecking fault condition, where the percentage of elapsed time for the operate timer is memorised for a set reset time delay. If the Start condition returns before the reset timer has timed out, the operate time initialises from the memorised travel value. Otherwise the memorised value is reset to zero after the reset time times out.

12.2.2 OVERPOWER LOGIC

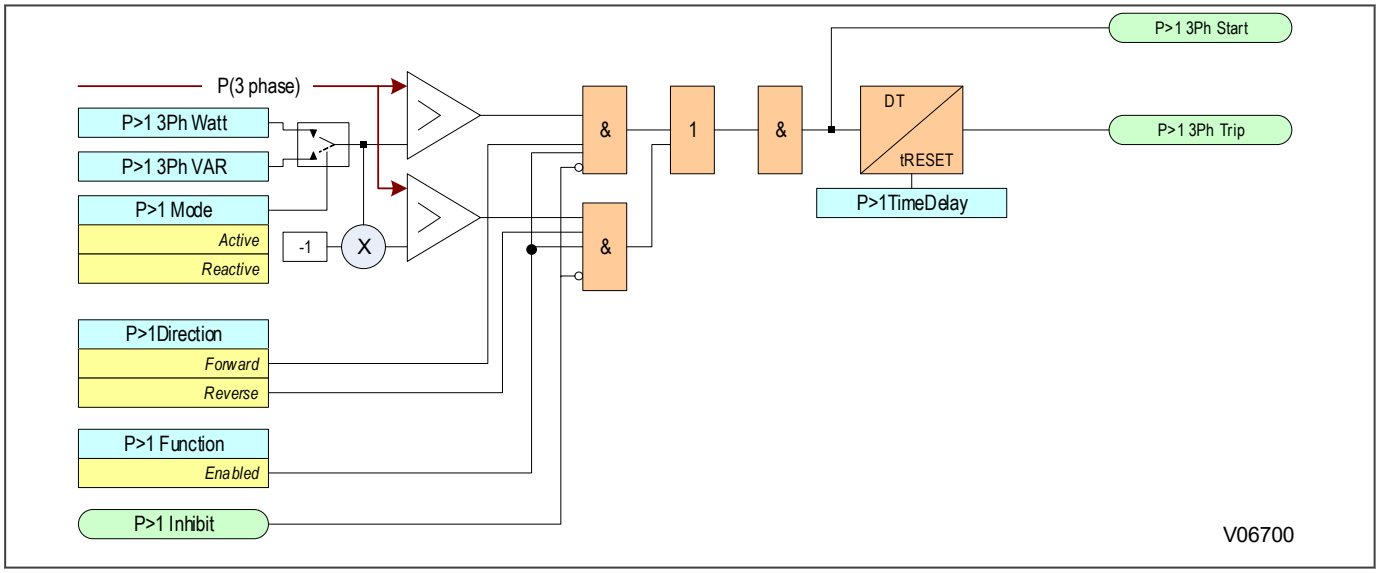

Figure 88: Overpower logic

12.2.3 APPLICATION NOTES

12.2.3.1 FORWARD OVERPOWER SETTING GUIDELINES

The relevant power threshold settings should be set greater than the full load rated power.

The operating mode should be set to Forward.

A time delay setting (***P>(n) TimeDelay***) should be applied. This setting is dependent on the application. The delay on the reset timer (***P>(n) tRESET***), would normally be set to zero.

12.2.3.2 REVERSE POWER CONSIDERATIONS

A generator is expected to supply power to the connected system in normal operation. If the generator prime mover fails, it will begin to take motoring power from the power system (if the power system to which it is connected has other generating sources). The consequences of this reversal of power and the level of power drawn from the power system will be dependent on the type of prime mover.

Typical levels of motoring power and possible motoring damage that could occur for various types of generating plant are given in the following table.

Prime Mover	Motoring Power	Possible Damage (Percentage Rating)
Diesel Engine	5% - 25%	Risk of fire or explosion from unburned fuel
Motoring level depends on compression ratio and cylinder bore stiffness. Rapid disconnection is required to limit power loss and risk of damage.		
Gas Turbine	10% - 15% (Split-shaft) >50% (Single-shaft)	With some gear-driven sets, damage may arise due to reverse torque on gear teeth.
Compressor load on single shaft machines leads to a high motoring power compared to split-shaft machines. Rapid disconnection is required to limit power loss or damage.		
Hydraulic Turbines	0.2 - >2% (Blades out of water) >2.0% (Blades in water)	Blade and runner damage may occur with a long period of motoring
Power is low when blades are above tail-race water level. Hydraulic flow detection devices are often the main means of detecting loss of drive. Automatic disconnection is recommended for unattended operation.		
Steam Turbines	0.5% - 3% (Condensing sets) 3% - 6% (Non-condensing sets)	Thermal stress damage may be inflicted on low-pressure turbine blades when steam flow is not available to dissipate losses due to air resistance.
Damage may occur rapidly with non-condensing sets or when vacuum is lost with condensing sets. Reverse power protection may be used as a secondary method of detection and might only be used to raise an alarm.		

In some applications, the level of reverse power in the case of prime mover failure may fluctuate. This may be the case for a failed diesel engine. To prevent cyclic initiation and reset of the main trip timer, an adjustable reset time delay is provided. You will need to set this time delay longer than the period for which the reverse power could fall below the power setting. This setting needs to be taken into account when setting the main trip time delay.

> *Note:*
> *A delay in excess of half the period of any system power swings could result in operation of the reverse power protection during swings.*

12.2.3.3 REVERSE OVERPOWER SETTING GUIDELINES

Each stage of power protection can be selected to operate as a reverse power stage by setting ***P>(n) Direction*** to `Reverse`.

The relevant power threshold settings should be set to less than 50% of the motoring power.

The operating mode should be set to Reverse.

The reverse power protection function should be time-delayed to prevent false trips or alarms being given during power system disturbances or following synchronisation.

A time delay setting, of approximately 5 s would be typically applied.

The delay on the reset timer, ***P>1 tRESET*** or ***P>2 tRESET***, would normally be set to zero.

When settings of greater than zero are used for the reset time delay, the pickup time delay setting may need to be increased to ensure that false tripping does not result in the event of a stable power swinging event.

Reverse overpower protection can also be used for loss of mains applications. If the distributed generator is connected to the grid but not allowed to export power to the grid, it is possible to use reverse power detection to switch off the generator. In this case, the threshold setting should be set to a sensitive value, typically less than 2% of the rated power. It should also be time-delayed to prevent false trips or alarms being given during power system disturbances, or following synchronisation. A typical time delay is 5 seconds.

12.3 UNDERPOWER PROTECTION

Although the Underpower protection is directional and can be configured as forward or reverse, the most common application is for Low Forward Power protection.

When a machine is generating and the circuit breaker connecting the generator to the system is tripped, the electrical load on the generator is cut off. This could lead to overspeeding of the generator if the mechanical input power is not reduced quickly. Large turbo-alternators, with low-inertia rotor designs, do not have a high over speed tolerance. Trapped steam in a turbine, downstream of a valve that has just closed, can rapidly lead to over speed. To reduce the risk of over speed damage, it may be desirable to interlock tripping of the circuit breaker and the mechanical input with a low forward power check. This ensures that the generator circuit breaker is opened only after the mechanical input to the prime mover has been removed, and the output power has reduced enough such that overspeeding is unlikely. This delay in tripping the circuit breaker may be acceptable for non-urgent protection trips (e.g. stator earth fault protection for a high impedance earthed generator). For urgent trips however (e.g. stator current differential protection), this Low Forward Power interlock should not be used.

12.3.1 UNDERPOWER PROTECTION IMPLEMENTATION

Underpower Protection is implemented under the path ***SETPOINTS\PROTECTION\GROUP [1-6]\POWER \UNDEROWER\UNDERPOWER 1***.

The *UNDERPOWER* Protection element provides multiple stages of directional underpower for both active and reactive power. The directional element can be configured as forward or reverse and can activate single-phase or three-phase trips.

The elements use three-phase power and single phase power measurements as the energising quantity. A start condition occurs when two consecutive measurements fall below the setting threshold. A trip condition occurs if the start condition is present for the set trip time. This can be inhibited by the VTS slow block and pole dead logic if desired.

The Start and Trip timer resets if the power exceeds the dropout level or if an inhibit condition occurs. The reset mechanism is similar to the overcurrent functionality for a pecking fault condition, where the percentage of elapsed time for the operate timer is memorised for a set reset time delay. If the Start condition returns before the reset timer has timed out, the operate time initialises from the memorised travel value. Otherwise the memorised value is reset to zero after the reset time times out.

12.3.2 UNDERPOWER LOGIC

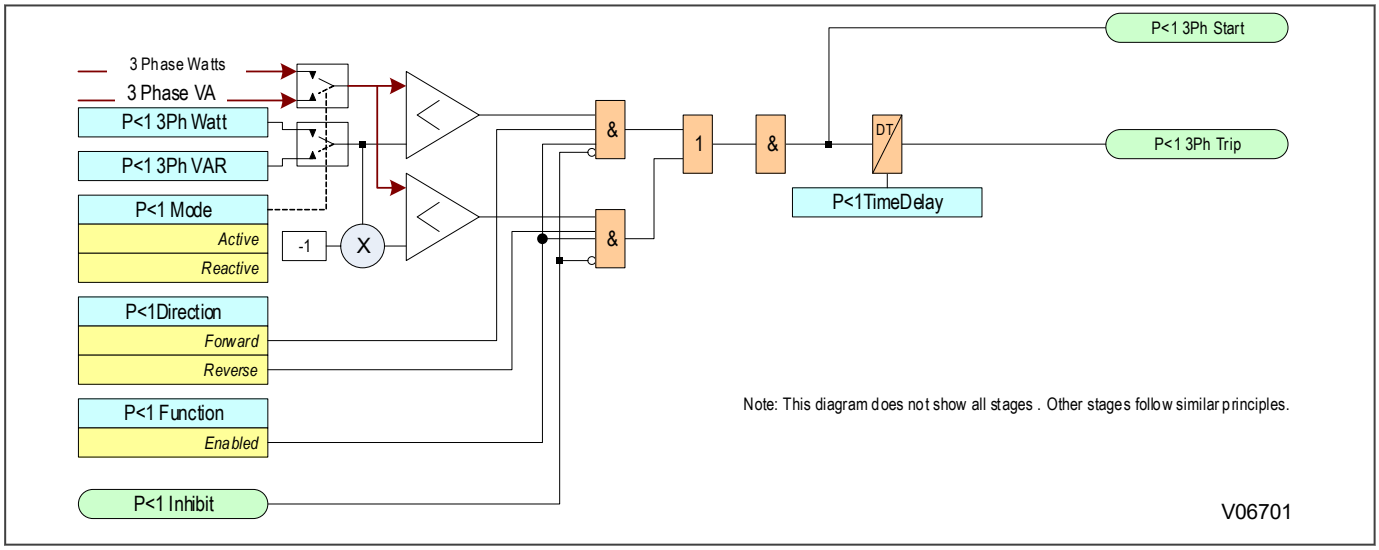

Figure 89: Underpower logic

12.3.3 APPLICATION NOTES

12.3.3.1 LOW FORWARD POWER CONSIDERATIONS

The Low Forward Power protection can be arranged to interlock ‘non-urgent’ protection tripping using the Flexlogic Equation Editor. It can also be arranged to provide a contact for external interlocking of manual tripping. To prevent unwanted alarms and flags, a Low Forward Power protection element can be disabled when the circuit breaker is opened via Pole Dead logic.

The Low Forward Power protection can also be used to provide loss of load protection when a machine is motoring. It can be used for example to protect a machine which is pumping from becoming unprimed, or to stop a motor in the event of a failure in the mechanical transmission.

A typical application would be for pump storage generators operating in the motoring mode, where there is a need to prevent the machine becoming unprimed which can cause blade and runner damage. During motoring conditions, it is typical for the protection to switch to another setting group with the low forward power enabled and correctly set and the protection operating mode set to `Reverse`.

A low forward power element may also be used to detect a loss of mains or loss of grid condition for applications where the distributed generator is not allowed to export power to the system.

12.3.3.2 LOW FORWARD POWER SETTING GUIDELINES

Each stage of power protection can be selected to operate as a forward power stage by setting ***P<(n) Direction*** to `Forward`.

When required for interlocking of non-urgent tripping applications, the threshold setting of the low forward power protection function should be less than 50% of the power level that could result in a dangerous overspeed condition on loss of electrical loading.

When required for loss of load applications, the threshold setting of the low forward power protection function, is system dependent, however, it is typically set to 10 - 20% below the minimum load. The operating mode should be set to operate for the direction of the load current, which would typically be reverse for a pump storage machine application where `Forward` is the Generating direction and `Reverse` is the motoring direction.

For interlocking non-urgent trip applications the time delay associated with the low forward power protection function could be set to zero. However, some delay is desirable so that permission for a non-urgent electrical trip is not given in the event of power fluctuations arising from sudden steam valve/throttle closure. A typical time delay is 2 seconds.

For loss of load applications the pickup time delay is application dependent but is normally set in excess of the time between motor starting and the load being established. Where rated power cannot be reached during starting (for example where the motor is started with no load connected) and the required protection operating time is less than the time for load to be established then it will be necessary to inhibit the power protection during this period. This can be done in the Flexlogic Equation Editor using AND logic and a pulse timer triggered from the motor starting to block the power protection for the required time.

When required for loss of mains or loss of grid applications where the distributed generator is not allowed to export power to the system, the threshold setting of the reverse power protection function, should be set to a sensitive value, typically <2% of the rated power.

The low forward power protection function should be time-delayed to prevent false trips or alarms being given during power system disturbances or following synchronisation. A time delay setting, of 5 s should be applied typically.

The delay on the reset timers would normally be set to zero.

To prevent unwanted alarms and flags, the protection element can be disabled when the circuit breaker is open via Pole Dead logic.

12.4 WATTMETRIC GROUND FAULT

12.4.1 WATTMETRIC GROUND IMPLEMENTATION

The Wattmetric Ground Fault element, also called Wattmetric Zero-sequence Directional element, responds to power derived from zero-sequence voltage and current in a direction specified by the element characteristic angle specified by ***DE>[X] ECA***. The angle ***WDE>[X] ECA*** can be set within all four quadrants and the power can be active or reactive. Therefore, the element may be used to sense either forward or reverse ground faults in inductive, capacitive or resistive networks. The inverse time characteristic ***WDE>[X] Curve*** allows time coordination of elements across the network.

Typical applications include ground fault protection in grounded/ungrounded/resistor-grounded/resonant-grounded distribution networks, or for directionalizing other non-directional ground elements.

The element uses neutral voltage and neutral current (that is, three times the zero-sequence). ***WDE>[X] Voltage*** and ***WDE>[X] Current*** settings allow selecting the internally calculated or externally supplied neutral voltage and current, respectively. Externally supplied neutral voltage is connected to 4th VT Input of the relay. The 4th VT Input must be identified by the user as a neutral voltage under the VT bank settings. Similarly, current supplied externally via the Earth CT input from more accurate sources such as the core balanced CT.

Element operates when three conditions are met to discriminate fault direction. These conditions are minimum current supervision, minimum voltage supervision and operating power to exceed the threshold.

Minimum zero-sequence voltage and current supervision is provided to supervise the directional power measurement. Minimum voltage and current levels are programmed using the settings specified as ***WDE>[X] Volt. Set*** and ***WDE>[X] CT I/P***, respectively. The thresholds are higher than possible unbalance during normal operation of the system.

The third condition to satisfy to operate the element after time delay is operating power quantity to exceeds the threshold defined by setting ***WDE>[X] Power Set***.

Element operation can be delayed by the time defined by the one of the three choices: definite time (DT), inverse curve (IDMT) or user defined curves.

The "DT" selection allows for a fixed time delay specified as ***WDE>[X] Time Delay*** when ***WDE>[X] Curve*** is selected as DT (definite time).

The "IDMT" selection allows for an inverse time characteristics delay defined by the following formula:

$$t = mx\frac{S_{ref}}{S_{op}}$$

Where:

m is a multiplier defined by the multiplier setting ***WDE>[X] TMS***,

S_{ref} is the reference power pickup setting ***WDE>[X] Pref Set***,

S_{op} is the operating power at the time.

This IDMT timer starts after the definite time, ***WDE>[X] Time Delay***, expires.

Four User Curves allow for custom user-programmable time characteristics. When working with User Curves, the element uses the operate power to reference power ratio, and the multiplier setting is not applied:

$$t = UserCurve\left(\frac{S_{op}}{S_{ref}}\right)$$

Again, the User Curve timer starts after the definite time, ***WDE>[X] Time Delay***, expires.

12.4.2 WATTMETRIC GROUND LOGIC

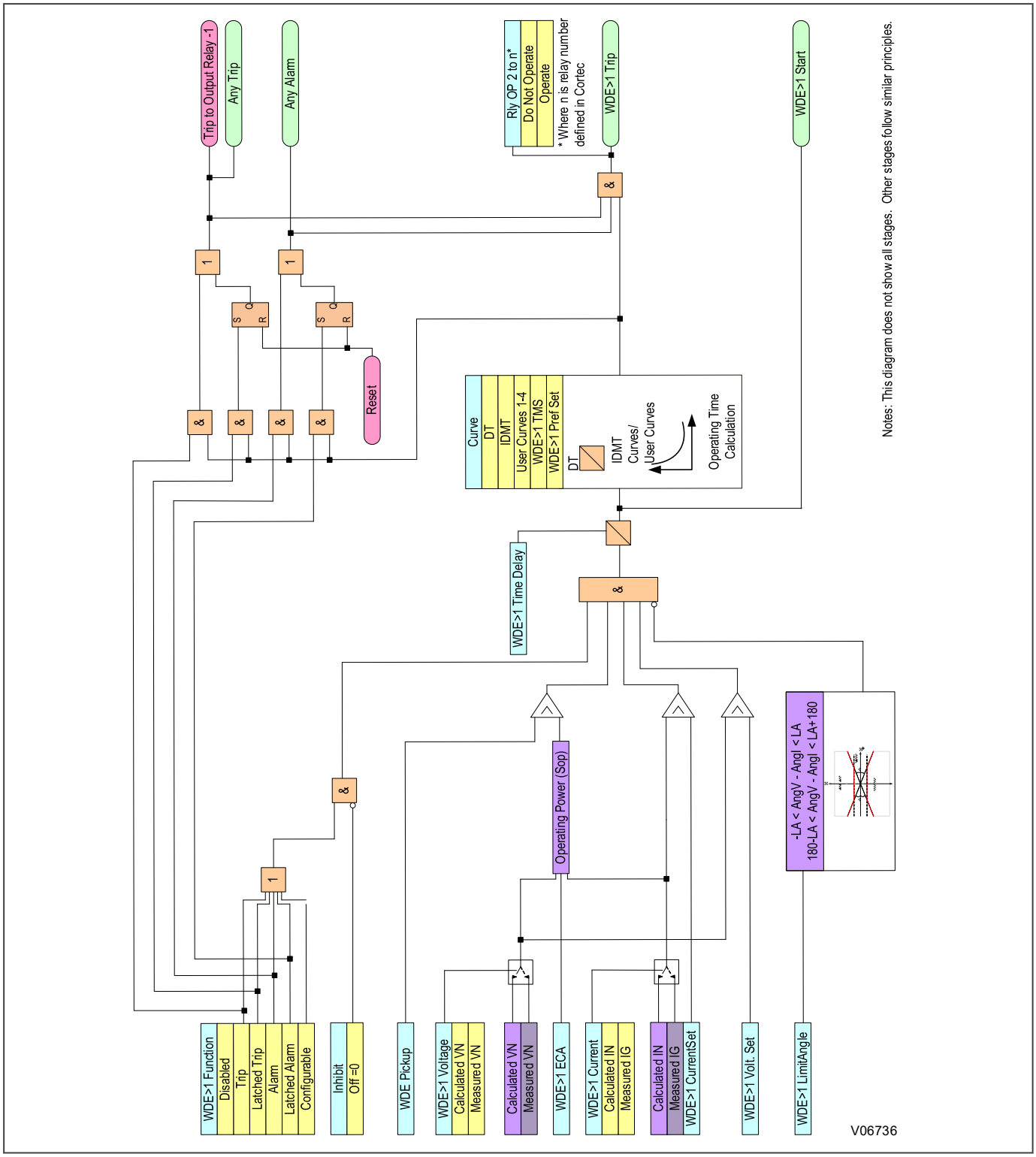

Figure 90: Wattmetric ground logic

12.4.3 SETTING GUIDELINES

To supervise the directional power measurement, typically, ***WDE>[X] Volt. Set*** setting is selected at 0.1 to 0.2 x VT for the ungrounded or resonant grounded systems, and at 0.05 to 0.1 x VT for solidly or resistor grounded systems.

When using externally supplied voltage via the 4th VT Input, 1 x VT is the nominal voltage of this channel as per VT bank settings. When using internally calculated neutral voltage, 1 x VT is the nominal phase-to-ground voltage per the VT bank settings.

WDE>[X] ECA setpoint adjusts the maximum torque angle of the element. The operating power is calculated as:

$$S_{op} = \mathrm{Re}\left(V_n \left(I_n \times 1\angle ECA^{\circ}\right)^{*}\right)$$

Where * indicates complex conjugate. By varying the element characteristic angle (ECA), the element can be made to respond to forward or reverse direction in inductive, resistive, or capacitive networks as shown in the Wattmetric characteristic angle response diagram.

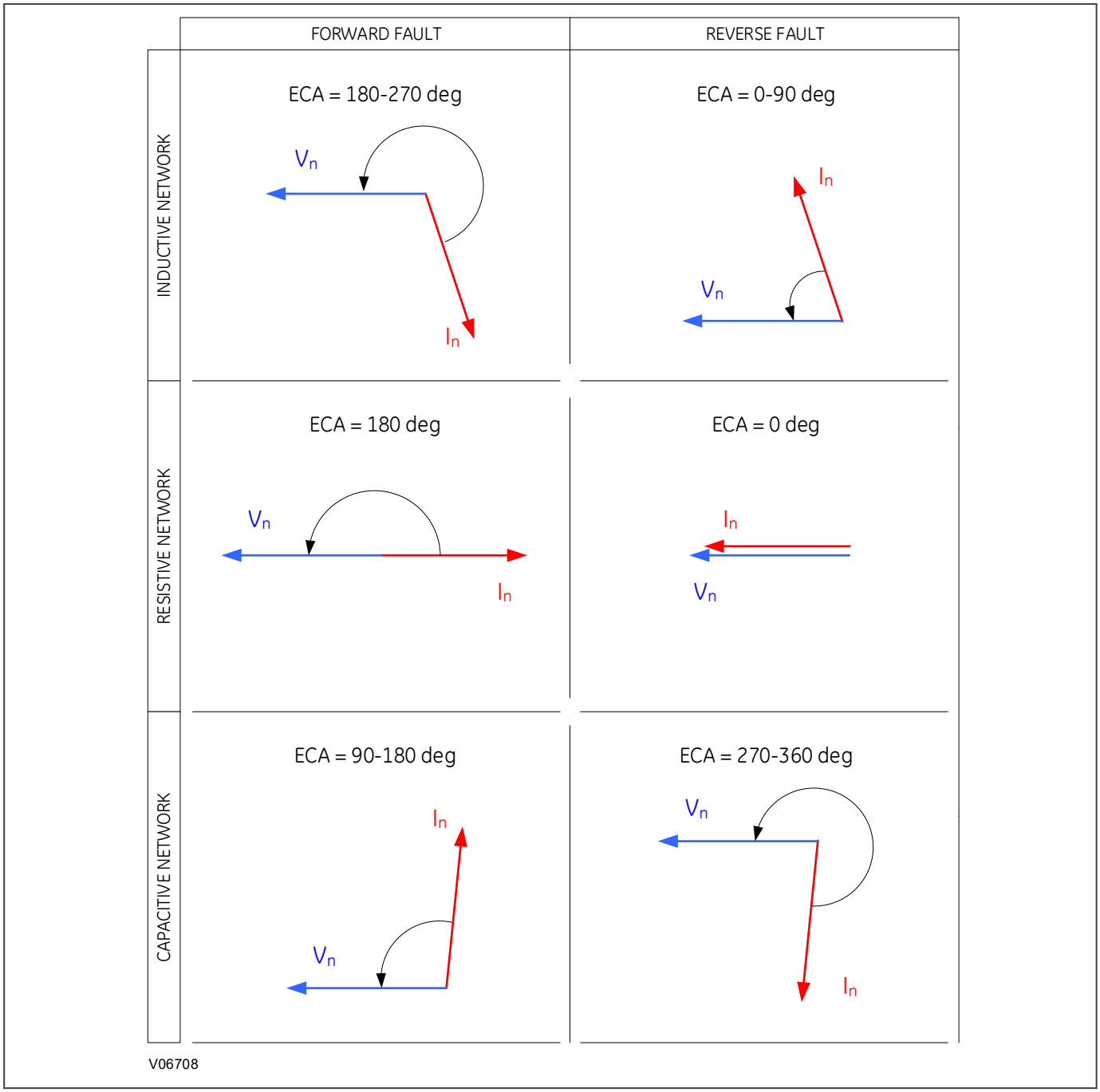

Figure 91: Wattmetric characteristic angle response

WDE>[X] LimitAngle defines the Limit Angle to block the WGF operation in both the directions.

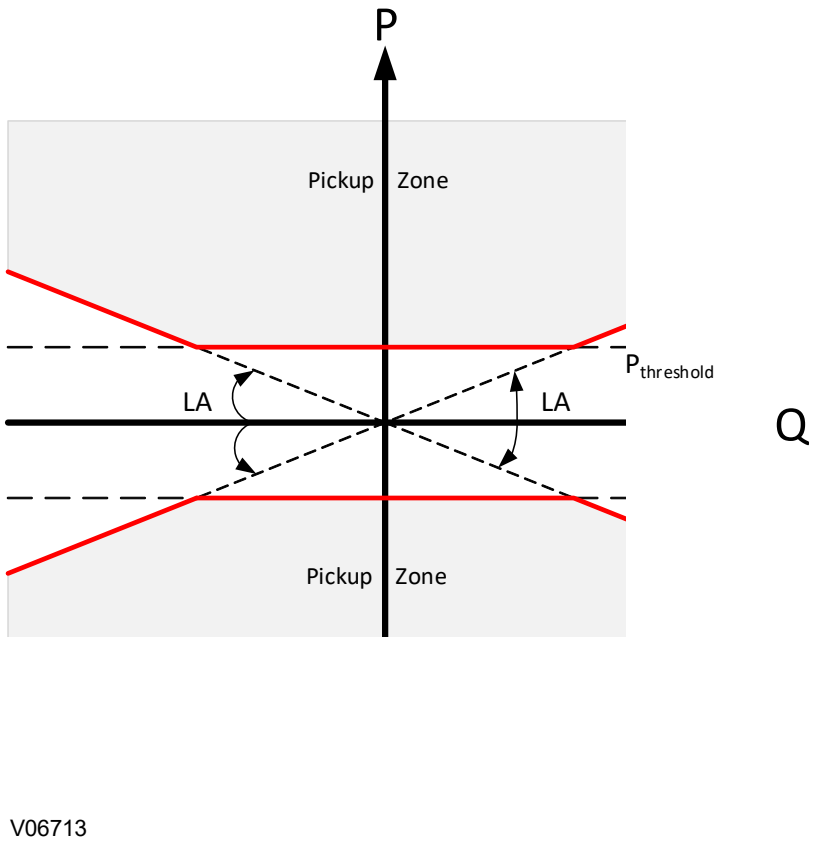

CHAPTER 13

ADMITTANCE

13.1 CHAPTER OVERVIEW

Selected models of this product provide sophisticated Autoreclose (AR) functionality. The purpose of this chapter is to describe the operation of this functionality including the principles, logic diagrams and applications.

This chapter contains the following sections:

Chapter Overview 221

Introduction 222

Neutral Admittance 223

13.2 INTRODUCTION

It is known that approximately 80 - 90% of faults are transient in nature. This means that most faults do not last long and are self-clearing. A common example of a transient fault is an insulator flashover, which may be caused for example by lightning, clashing conductors or wind-blown debris.

A transient fault, such as an insulator flashover, is a self-clearing ‘non-damage’ fault. The flashover will cause one or more circuit breakers to trip, but it may also have the effect of clearing the fault. If the fault clears itself, the fault does not recur when the line is re-energised.

The remaining 10 – 20% of faults are either semi-permanent or permanent. A small tree branch falling on the line could cause a semi-permanent fault. Here the cause of the fault would not be removed by the immediate tripping of the circuit, but could be burnt away during a time-delayed trip. Permanent faults could be broken conductors, transformer faults, cable faults or machine faults, which must be located and repaired before the supply can be restored.

In the majority of fault incidents, if the faulty line is immediately tripped out, and time is allowed for the fault arc to deionise, reclosure of the circuit breakers will result in the line being successfully re-energised.

Autoreclose schemes are used to automatically reclose a circuit breaker a set time after it has been opened due to operation of a protection element.

On HV/MV distribution networks, autoreclosing is applied mainly to radial feeders, where system stability problems do not generally arise. The main advantages of using Autoreclose are:

- Minimal interruption in supply to the consumer
- Reduction of operating costs - fewer man hours in repairing fault damage and the possibility of running unattended substations
- With Autoreclose, instantaneous protection can be used which means shorter fault durations. This in turn means less fault damage and fewer permanent faults

Autoreclosing provides an important benefit on circuits using time-graded protection, in that it allows the use of instantaneous protection to provide a high speed first trip. With fast tripping, the duration of the power arc resulting from an overhead line fault is reduced to a minimum. This lessens the chance of damage to the line, which might otherwise cause a transient fault to develop into a permanent fault. Using instantaneous protection also prevents blowing of fuses in teed feeders, as well as reducing circuit breaker maintenance by eliminating pre-arc heating.

When instantaneous protection is used with autoreclosing, the scheme is normally arranged to block the instantaneous protection after the first trip. Therefore, if the fault persists after re-closure, the time-graded protection will provide discriminative tripping resulting in the isolation of the faulted section. However, for certain applications, where the majority of the faults are likely to be transient, it is common practise to allow more than one instantaneous trip before the instantaneous protection is blocked.

Some schemes allow a number of re-closures and time-graded trips after the first instantaneous trip, which may result in the burning out and clearance of semi-permanent faults. Such a scheme may also be used to allow fuses to operate in teed feeders where the fault current is low.

When considering feeders that are partly overhead line and partly underground cable, any decision to install auto-reclosing should be subject to analysis of the data (knowledge of the frequency of transient faults). This is because this type of arrangement probably has a greater proportion of semi-permanent and permanent faults than for purely overhead feeders. In this case, the advantages of autoreclosing are small. It can even be disadvantageous because re-closing on to a faulty cable is likely to exacerbate the damage.

13.3 NEUTRAL ADMITTANCE

In medium voltage (MV) network, the compensating reactor is used to compensate the capacitive fault current ideally to zero at the fault point. However, detection of low earth-fault current in such networks is challenging when using the conventional current-based ground fault detection methods.

13.3.1 NEUTRAL ADMITTANCE IMPLEMENTATION

This element uses neutral admittance-based criteria to successfully detect the earth fault in the compensated or isolated MV networks. Measured or calculated values of neutral current and neutral voltage are used to calculate the shunt neutral admittance (Y_0), conductance (G_0) and susceptance (B_0). The element uses one of the three modes (Y_0, G_0, B_0) to operate or block the output operands.

The element uses one of the three modes (Y_0, G_0, B_0) to operate or block the output operands. The setpoint ***Mode*** allows selecting the protection criterion (characteristic quantity) of the Neutral Admittance Ground Fault protection. When this value is set to Y_0, G_0 and B_0, the protection criterion is Neutral-Admittance, Neutral-Conductance, and Neutral-Susceptance, respectively.

Neutral admittance, conductance, and susceptance quantities are calculated from zero-sequence current and voltage, which are either calculated from three phase inputs or calculated from externally supplied neutral input. ***Current I/P*** and ***Voltage I/P*** settings allow selecting the internally calculated zero-sequence values or calculated from externally supplied neutral voltage and current, respectively. Externally supplied neutral voltage is connected to 4th VT Input of the relay. The 4th VT Input must be identified by the user as a neutral voltage under the VT bank settings. Similarly, current supplied externally via the Earth CT input.

Element operates after the ***Time Delay*** when three conditions are met. These conditions are minimum current supervision, minimum voltage supervision and operating quantity (Y_0, G_0, B_0) to exceed the threshold.

Minimum voltage and current levels are programmed using the settings specified as ***VN Threshold*** and ***IN Threshold***, respectively. The element will remain blocked until zero-sequence current, and voltage exceeds minimum threshold.

13.3.2 NEUTRAL ADMITTANCE LOGIC

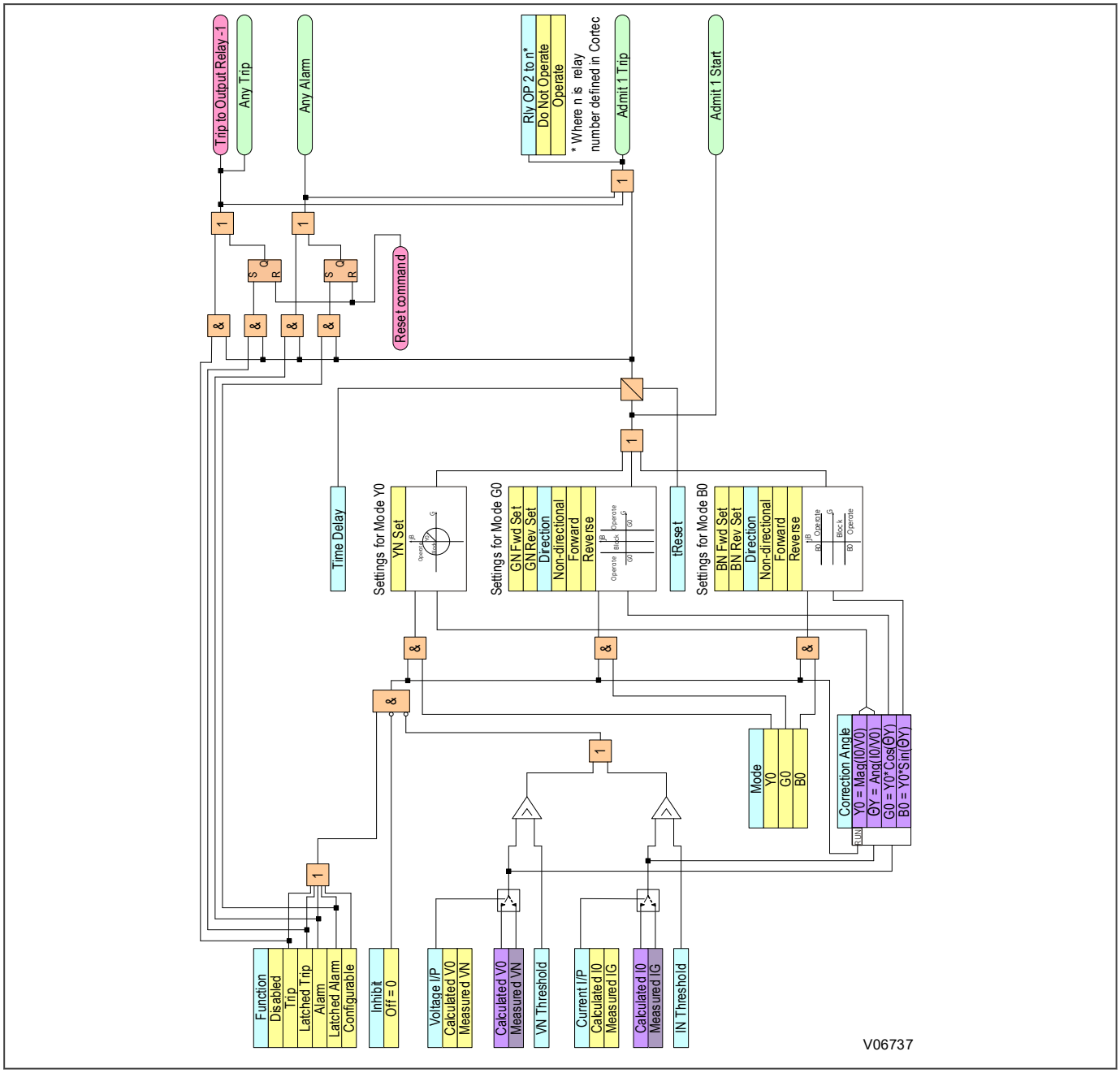

Figure 92: Neutral admittance logic

13.3.3 SETTING GUIDELINES

Using ***Mode*** setting element allows selecting the protection criterion (characteristic quantity) of the Neutral Admittance Ground Fault protection.

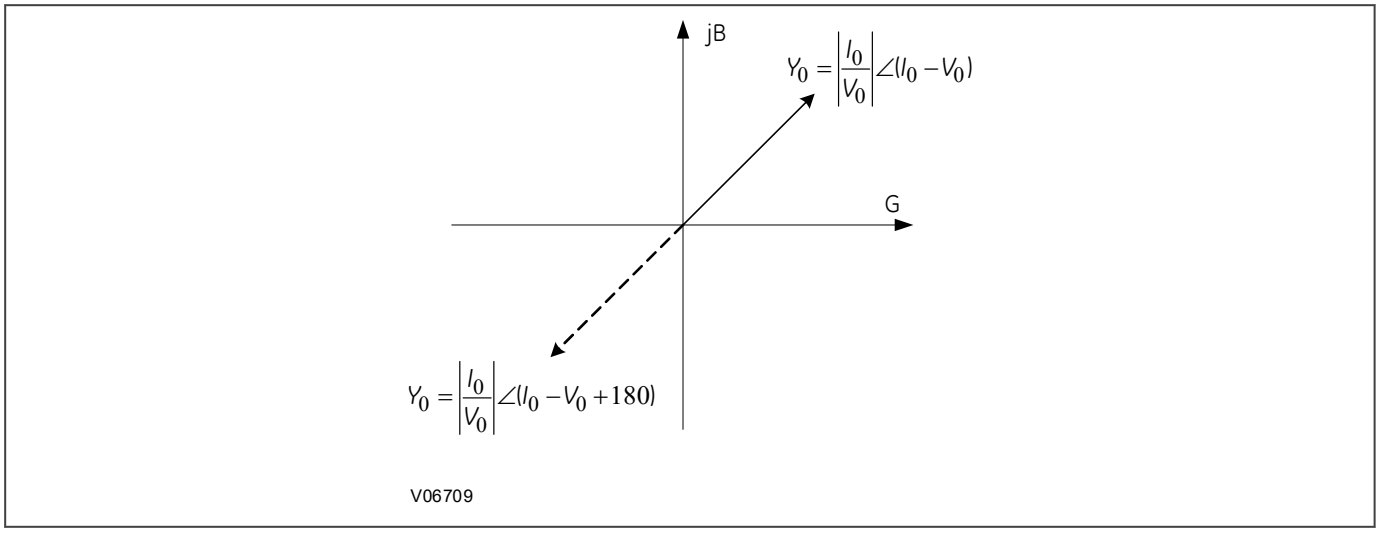

The setpoint ***Direction*** is used to specify the direction of the fault. When this setting is set to "Non-Directional", the element operates in both forward and reverse direction. If set to "Forward", the element operates when the fault is detected in the forward direction. When set to "Reverse", the element operates when the fault is detected in the Reverse direction. Mode Y_0 always operates in non-directional, therefore ***Direction*** setting is not applicable to protection criterion mode Y_0.

Correction Angle specifies the correction angle between current and voltage. This setting can be used to correct the relative polarity of the ground current with respect to voltage. If the polarity of the current is reversed or not relative to voltage, this setting can be used to change the polarity. When "180 deg" is selected, the measured admittance Y_0 is multiplied with -1 which corresponds to 180 deg shift in current direction.

Secondly, this angle can also be used to eliminate the angular errors of the voltage transformer and/or current transformers (CT); measured phase angle deviations caused by measuring inaccuracy of voltage transformers, can be eliminated by properly setting this value.

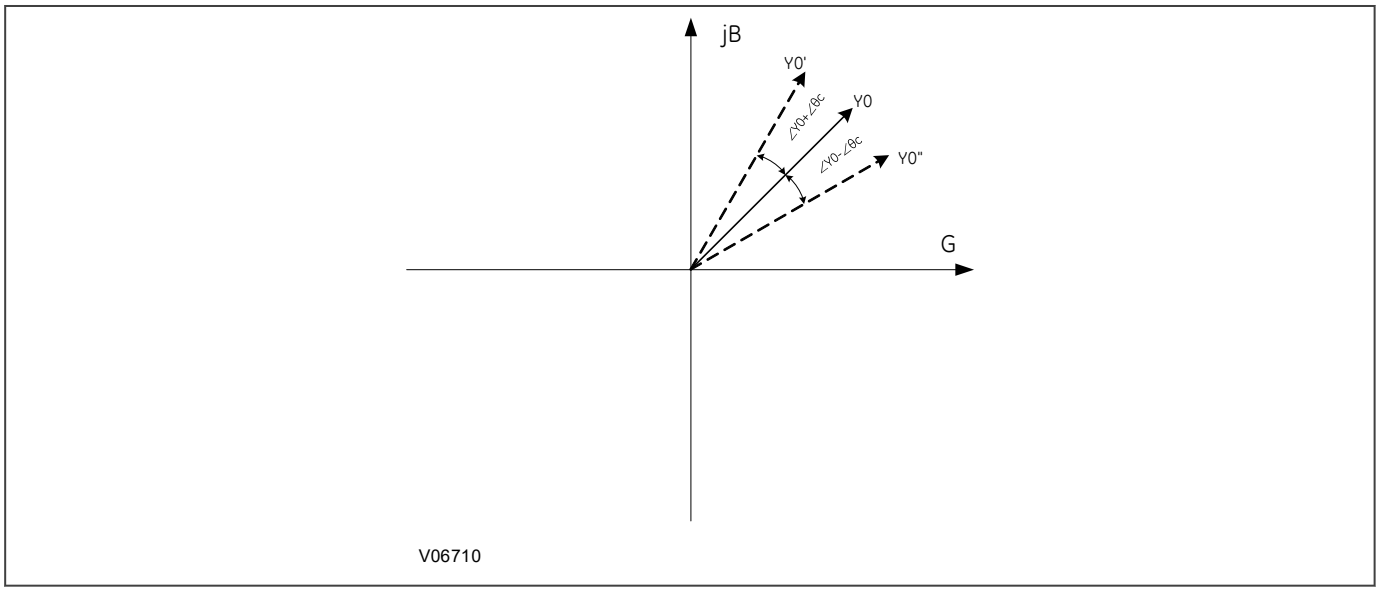

When Y_0 mode is selected, neutral admittance operates when Y_0 reach exceeds the reach **YN Set**. Regardless of the Direction setting, this element always operates in the non-directional mode. Operating characteristic depends only on pick-up threshold defined by this setting.

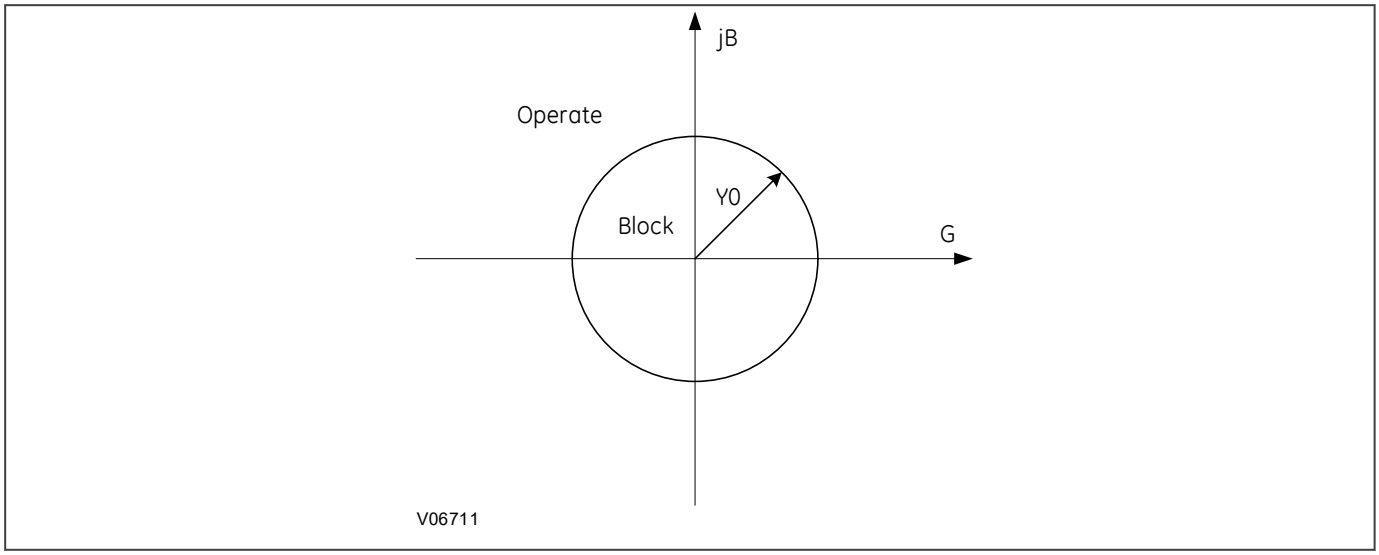

Modes G_0 and B_0 operate in forward, reverse or in both directions depending on the selection of direction. When direction is configured as Non-directional, G_0 and B_0 operates in both forward and reverse directions when operating quantity exceeds the corresponding reach level defined by ***GN Fwd Set/BN Fwd Set and GN Rev Set/BN Rev Set***. In Forward direction, G_0 and B_0 operates in forward direction when operating quantity (GN or BN) exceeds ***GN Fwd Set*** and ***BN Fwd Set*** reach, respectively. In Reverse direction, G_0 and B_0 operates in reverse direction when operating quantity (GN or BN) exceeds ***GN Rev Set*** and ***BN Rev Set*** reach, respectively.

The following figures show the interactions between different setting options of parameters Mode and Direction per the tripping and operating ranges of Neutral Admittance Ground Fault protection:

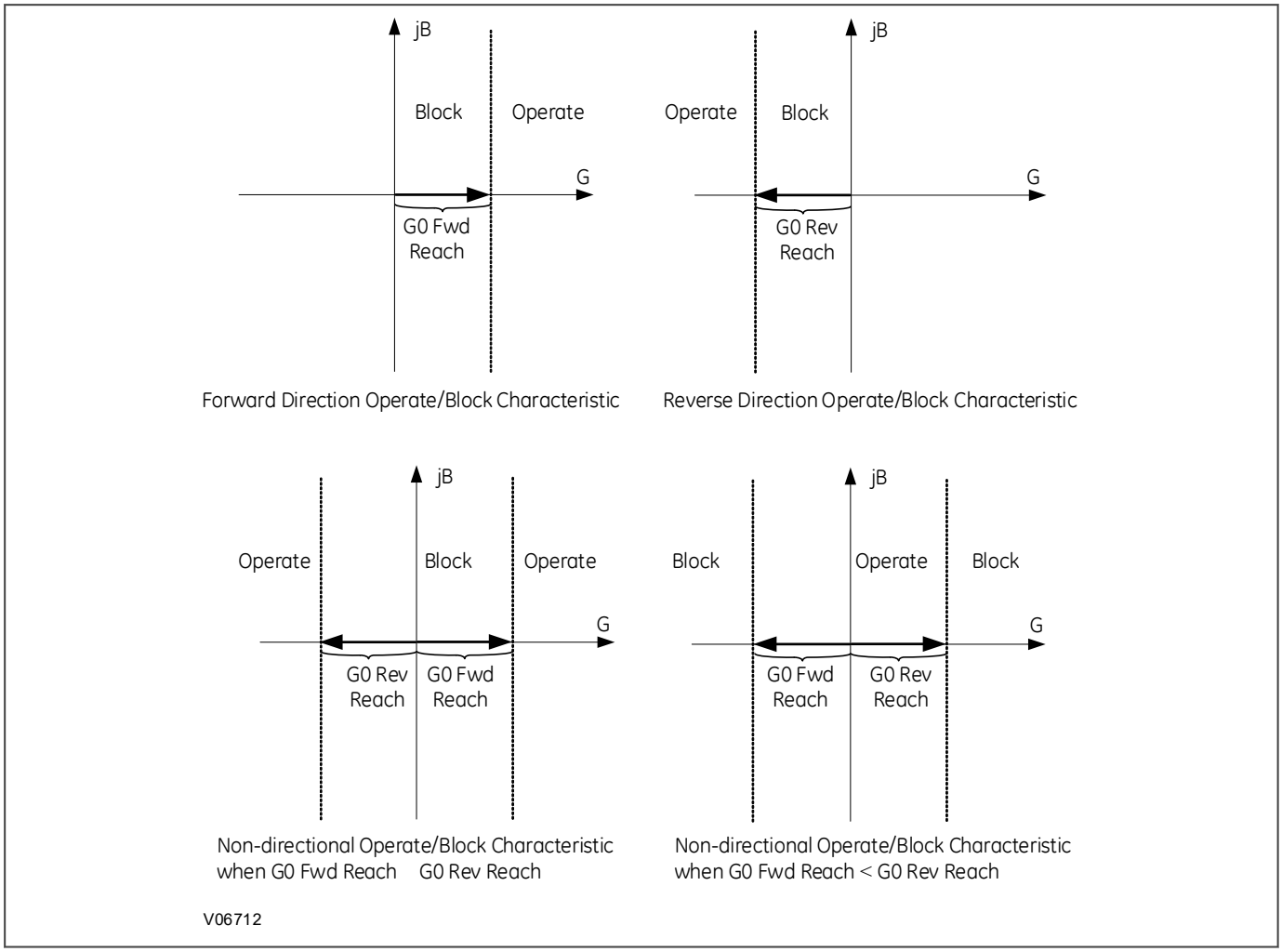

Note:
In order to get proper functionality, the settings of the element should be programmed with values higher enough to allow measurement oscillation over the accuracy level.

CHAPTER 14

AUTORECLOSE

14.1 CHAPTER OVERVIEW

Selected models of this product provide sophisticated Autoreclose (AR) functionality. The purpose of this chapter is to describe the operation of this functionality including the principles, logic diagrams and applications.

This chapter contains the following sections:

Chapter Overview 229
Introduction to 3-phase Autoreclose 230
Implementation 231
Autoreclose Function Inputs 232
Autoreclose Function Outputs 235
Autoreclose Function Alarms 237
Autoreclose Operation 238
Setting Guidelines 255

14.2 INTRODUCTION TO 3-PHASE AUTORECLOSE

It is known that approximately 80 - 90% of faults are transient in nature. This means that most faults do not last long and are self-clearing. A common example of a transient fault is an insulator flashover, which may be caused for example by lightning, clashing conductors or wind-blown debris.

A transient fault, such as an insulator flashover, is a self-clearing 'non-damage' fault. The flashover will cause one or more circuit breakers to trip, but it may also have the effect of clearing the fault. If the fault clears itself, the fault does not recur when the line is re-energised.

The remaining 10 – 20% of faults are either semi-permanent or permanent. A small tree branch falling on the line could cause a semi-permanent fault. Here the cause of the fault would not be removed by the immediate tripping of the circuit, but could be burnt away during a time-delayed trip. Permanent faults could be broken conductors, transformer faults, cable faults or machine faults, which must be located and repaired before the supply can be restored.

In the majority of fault incidents, if the faulty line is immediately tripped out, and time is allowed for the fault arc to deionise, reclosure of the circuit breakers will result in the line being successfully re-energised.

Autoreclose schemes are used to automatically reclose a circuit breaker a set time after it has been opened due to operation of a protection element.

On HV/MV distribution networks, autoreclosing is applied mainly to radial feeders, where system stability problems do not generally arise. The main advantages of using Autoreclose are:

- Minimal interruption in supply to the consumer
- Reduction of operating costs - fewer man hours in repairing fault damage and the possibility of running unattended substations
- With Autoreclose, instantaneous protection can be used which means shorter fault durations. This in turn means less fault damage and fewer permanent faults

Autoreclosing provides an important benefit on circuits using time-graded protection, in that it allows the use of instantaneous protection to provide a high speed first trip. With fast tripping, the duration of the power arc resulting from an overhead line fault is reduced to a minimum. This lessens the chance of damage to the line, which might otherwise cause a transient fault to develop into a permanent fault. Using instantaneous protection also prevents blowing of fuses in teed feeders, as well as reducing circuit breaker maintenance by eliminating pre-arc heating.

When instantaneous protection is used with autoreclosing, the scheme is normally arranged to block the instantaneous protection after the first trip. Therefore, if the fault persists after re-closure, the time-graded protection will provide discriminative tripping resulting in the isolation of the faulted section. However, for certain applications, where the majority of the faults are likely to be transient, it is common practise to allow more than one instantaneous trip before the instantaneous protection is blocked.

Some schemes allow a number of re-closures and time-graded trips after the first instantaneous trip, which may result in the burning out and clearance of semi-permanent faults. Such a scheme may also be used to allow fuses to operate in teed feeders where the fault current is low.

When considering feeders that are partly overhead line and partly underground cable, any decision to install auto-reclosing should be subject to analysis of the data (knowledge of the frequency of transient faults). This is because this type of arrangement probably has a greater proportion of semi-permanent and permanent faults than for purely overhead feeders. In this case, the advantages of autoreclosing are small. It can even be disadvantageous because re-closing on to a faulty cable is likely to exacerbate the damage.

14.3 IMPLEMENTATION

Autoreclose functionality is a software option, which is selected when ordering the device, so this description only applies to models with this option.

Autoreclose works for phase overcurrent (POC) earth fault (EF) and sensitive earth fault (SEF) protection. It is implemented in the under the path SETPOINTS\CONTROL\AUTORECLOSE

The Autoreclose function can be set to perform a single-shot, two-shot, three-shot or four-shot cycle. You select this by the ***Number of Shots*** setting in the ***AR (n) Setup*** menu. You can also initiate a separate Autoreclose cycle for the SEF protection, with a different number of shots, selected by the ***Number SEF Shots***. Dead times for all shots can be adjusted independently.

An Autoreclose cycle can be initiated internally by operation of a protection element, or externally by a separate protection device.At the end of the relevant dead time, an Auto Close signal is given, providing it is safe for the circuit breaker to close. This is determined by checking that certain system conditions are met as specified by the **System *Checks*** functionality.

It is safe to close the circuit breaker providing that:

- only one side of the circuit breaker is live (either dead line/live bus, or live line/dead bus), or
- if both bus and line sides of the circuit breaker are live, the system voltages are synchronised.

In addition, the energy source powering the circuit breaker (for example the closing spring) must be fully charged. This is indicated from the ***CB Healthy*** input.

When the CB has closed, the reclaim time starts. If the circuit breaker does not trip again, the Autoreclose function resets at the end of the set reclaim time. If the protection operates during the reclaim time the device either advances to the next shot in the Autoreclose cycle, or if all reclose attempts have been made, goes to lockout.

CB Status signals must also be available, so the default setting for ***CB Status Input*** should be modified according to the application. The default Flexlogic Equation Editor requires 52A, 52B and CB Healthy logic inputs, so a setting of both ***52A and 52B*** would be required for the ***CB Status Input*** if used with the default Flexlogic Equation Editor.

14.4 AUTORECLOSE FUNCTION INPUTS

The Autoreclose function has several logic inputs, which can be mapped to any of the opto-inputs or to one or more of the output signals generated by the Flexlogic Equation Editor. The functions of these inputs are described below.

14.4.1 CB HEALTHY

It is necessary to establish if there is sufficient energy in the circuit breaker (spring charged, gas pressure healthy, etc.) before the CB can be closed. This ***CB Healthy*** input is used to ensure this before initiating a ***CB closed 3 ph*** command. If on completion of the dead time, the ***CB Healthy*** input is low, and remains low for a period given by the ***CB Healthy Time*** timer, lockout will result and the circuit breaker will remain open.

The majority of circuit breakers are only capable of providing a single trip-close-trip cycle, in which case the ***CB Healthy*** signal would stay low after one Autoreclose shot, resulting in lockout.

This check can be disable by setting ***CB Healthy*** to `on`, whereby the signal defaults to high state.

14.4.2 BLOCK AR

The ***Block AR*** input blocks the Autoreclose function and causes a lockout. It can be used when protection operation without Autoreclose is required. A typical example is on a transformer feeder, where Autoreclose may be initiated by the feeder protection but blocked by the transformer protection.

14.4.3 RESET LOCKOUT

The ***Reset Lockout*** input can be used to reset the Autoreclose function following lockout. It also resets any Autoreclose alarms, provided that the signals that initiated the lockout have been removed.

14.4.4 AR AUTO MODE

The ***AR Auto Mode*** input is used to select the Auto operating mode. In this mode, the Autoreclose function is in service.

14.4.5 AR LIVELINE MODE

The ***AR LiveLine Mode*** input is used to select the Live Line operating mode when Autoreclose is out of service and all blocking of instantaneous protection by Autoreclose is disabled. This operating mode takes precedence over all other operating modes for safety reasons, as it indicates that utility personnel are working near live equipment.

14.4.6 TELECONTROL MODE

The ***Telecontrol*** input is used to select the Telecontrol operating mode so that the Auto and Non-auto modes of operation can be selected remotely.

14.4.7 LIVE/DEAD CCTS OK (LIVE/DEAD CIRCUITS OK)

The ***LiveDead Ccts OK*** signal is a signal indicating the status of the Live Line/Dead Bus or Live Bus/Dead Line system conditions (High = OK, Low = Not OK). The logic required can be derived in the Flexlogic Equation Editor from the Live Line, Dead Line, Live Bus and Dead Bus signals in the System Check logic (if applicable), or it can come from an external source depending on the application.

14.4.8 AR SYS CHECKS (AR SYSTEM CHECKS)

This signal can be mapped to an opto-input, to allow the IED to receive a signal from an external system monitoring device, indicating that the system conditions are suitable for CB closing. This should not normally be necessary, since the IED has comprehensive built in system check functionality.

14.4.9 EXT AR PROT TRIP (EXTERNAL AR PROTECTION TRIP)

The ***Ext AR Prot Trip*** signal allows Autoreclose initiation by a Trip from a separate protection device.

14.4.10 EXT AR PROT START (EXTERNAL AR PROTECTION START)

The ***Ext AR Prot Strt*** signal allows Autoreclose initiation by a Start from a separate protection device.

14.4.11 DAR COMPLETE (DELAYED AUTORECLOSE COMPLETE)

Some utilities require Delayed Autoreclose (DAR) functionality.

The ***DAR Complete*** signal can, if required, be mapped in Flexlogic Equation Editor to provide a short pulse when a CB Close command is given at the end of the dead time. If ***DAR Complete*** is activated during an Autoreclose cycle, the output signal ***DAR in Progress*** resets, even though the reclaim time may still be running, and ***AR in Progress*** remains set until the end of the reclaim time.

For most applications, ***DAR complete*** can be ignored (not mapped in Flexlogic Equation Editor). In such cases, **DAR in *Progress*** operates and resets in parallel with ***AR in Progress***.

14.4.12 CB IN SERVICE (CIRCUIT BREAKER IN SERVICE)

The ***CB In Service*** signal must remain asserted when protection operates if autoreclose is to be initiated. For most applications, it can be mapped to ***CB Closed 3ph***. More complex Flexlogic Equation Editor mapping can be programmed if required, for example where it is necessary to confirm not only that the CB is closed but also that the line and/or bus VT is actually live up to the instant of protection operation.

14.4.13 AR RESTART

In some applications, it is sometimes necessary to initiate an Autoreclose cycle by means of connecting an external signal to an opto-input. This would be when the normal interlock conditions are not all satisfied, i.e. when the CB is open and the associated feeder is dead. If the ***AR Restart*** input is mapped to an opto-input, activation of that opto-input will initiate an Autoreclose cycle irrespective of the status of the ***CB in Service*** input, provided the other interlock conditions, are still satisfied.

14.4.14 DT OK TO START (DEAD TIME OK TO START)

This is an optional extra interlock in the dead time initiation logic. In addition to the CB being open and the protection reset, ***DT OK To Start*** has to be set high to allow the dead time function to be primed after an AR cycle has started. Once the dead time function is primed, this signal has no further affect - the dead time function stays primed even if the signal subsequently goes low. A typical Flexlogic Equation Editor mapping for this input is from the ***Dead Line*** signal from the System Check logic. This would enable dead time priming only when the feeder has gone dead after CB tripping. If this extra dead time priming interlock is not required, ***DT OK To Start*** is set to `On`, and it will default to a high state.

14.4.15 DEADTIME ENABLED

This is an optional interlock in the dead time logic. This signal has to be high to allow the dead time to run. If this signal goes low, the dead time stops and resets, but stays primed, and will restart from zero when it goes high again. A typical Flexlogic Equation Editor mapping is from the ***CB Healthy*** input or from selected signals from the System Check logic. It could also be mapped to an opto-input to provide a 'hold off' function for the follower CB in a 'master/follower' application with 2 CBs. If this optional interlock is not required, ***DeadTimeEnabled*** is set to `On`, and it will default to a high state.

14.4.16 AR INIT TRIPTEST (INITIATE TRIP TEST)

If ***AR Init TripTest*** is mapped to an opto-input, and that input is activated momentarily, the IED generates a CB trip output via ***AR Trip Test***. The default Flexlogic Equation Editor then maps this to output to the trip output relay and initiates an Autoreclose cycle.

14.4.17 AR SKIP SHOT 1

If **A*R Skip Shot 1*** is mapped to an opto-input, and that input is activated momentarily, the IED logic will cause the Autoreclose sequence counter to increment by 1. This will decrease the available number of reclose shots and will lockout the re-closer.

14.4.18 INH RECLAIM TIME (INHIBIT RECLAIM TIME)

If ***Inh Reclaim Time*** is mapped to an opto-input, and that input is active at the start of the reclaim time, the IED logic will cause the reclaim timers to be blocked.

14.5 AUTORECLOSE FUNCTION OUTPUTS

The Autoreclose function has several logic outputs, which can be assigned to output relay contacts or the Flexlogic Equation Editor. The functions of these outputs are described below.

14.5.1 AR IN PROGRESS

This signal is present during the complete re-close cycle from the start of protection to the end of the reclaim time or lockout.

14.5.2 DAR IN PROGRESS

This operates together with the ***AR In Progress*** signal at the start of Autoreclose. If ***DAR Complete*** does not operate, ***DAR in Progress*** remains operated until ***AR In Progress*** resets at the end of the cycle. If ***DAR Complete*** goes high during the Autoreclose cycle, ***DAR in Progress*** resets.

14.5.3 SEQUENCE COUNTER STATUS SIGNALS

During each Autoreclose cycle a sequence Counter increments by 1 after each fault trip and resets to zero at the end of the cycle.

- ***AR SeqCounter 0*** is set when the counter is at zero
- ***AR SeqCounter 1*** is set when the counter is at 1
- ***AR SeqCounter 2*** is set when the counter is at 2
- ***AR SeqCounter 3*** is set when the counter is at 3
- ***AR SeqCounter 4*** is set when the counter is at 4

14.5.4 SUCCESSFUL CLOSE

The ***Successful Close*** output indicates that an Autoreclose cycle has been successfully completed. A successful Autoreclose signal is given after the protection has tripped the CB and it has reclosed successfully. The successful Autoreclose output is reset at the next CB trip or from one of the reset lockout methods.

14.5.5 AR IN SERVICE

The ***AR In Service*** output indicates whether the Autoreclose is in or out of service. Autoreclose is In Service when the device is in ***Auto*** mode and Out of Service when in the ***Non Auto*** and ***Live Line*** modes.

14.5.6 AR BLK MAIN PROT (BLOCK MAIN PROTECTION)

The ***AR Blk Main Prot*** signal blocks the DT-only stages (instantaneous stages) of the main current protection elements. You block the instantaneous stages for each trip of the Autoreclose cycle using the ***Trip 1 Main, Trip 2 Main, Trip 3 Main, Trip 4 Main*** and ***Trip 5 Main*** settings.

14.5.7 AR BLK SEF PROT (BLOCK SEF PROTECTION)

The ***AR Blk SEF Prot*** signal blocks the DT-only stages (instantaneous stages) of the SEF protection elements. You block the instantaneous SEF stages for each trip of the Autoreclose cycle using the ***Trip 1 SEF***, ***Trip 2 SEF***, ***Trip 3 SEF***, ***Trip 4 SEF*** and ***Trip 5 SEF*** settings.

14.5.8 RECLOSE CHECKS

The ***Reclose Checks*** output indicates that the AR System Checks are in progress.

14.5.9 DEADTIME IN PROG

The ***DeadTime in Prog*** output indicates that the dead time is in progress. This signal is set when ***Reclose Checks*** is set AND input ***Dead TimeEnabled*** is high. This may be useful during commissioning to check the operation of the Autoreclose cycle.

14.5.10 DT COMPLETE (DEAD TIME COMPLETE)

DT *Complete* (Dead time complete) operates at the end of the set dead time, and remains operated until either the scheme resets at the end of the reclaim time or a further protection operation or Autoreclose initiation occurs. It can be applied purely as an indication, or included in the Flexlogic Equation Editor mapping to logic input ***DAR Complete***.

14.5.11 AR SYNC CHECK (AR SYNCHRONISATION CHECK)

AR Sync Check indicates that the Autoreclose Synchronism checks are satisfactory. This is when the synchronisation check module confirms an In-Synchronism condition.

14.5.12 AR SYSCHECKS OK (AR SYSTEM CHECKS OK)

AR SysChecks OK indicates that the Autoreclose System checks are satisfactory. This is when any selected system check condition (synchronism check, live bus/dead line etc.) is confirmed.

14.5.13 AUTO CLOSE

The ***Auto Close*** output indicates that the Autoreclose logic has issued a `Close` signal to the CB. This output feeds a signal to the control close pulse timer and remains on until the CB has closed. This signal may be useful during commissioning to check the operation of the Autoreclose cycle.

14.5.14 PROTECTION LOCKT (PROTECTION LOCKOUT)

Protection Lockt (Protection Lockout) operates if ***AR lockout*** is triggered by protection operation either during the inhibit period following a manual CB close or when the device is in ***Non-auto*** or ***Live Line*** mode.

14.5.15 RESET LCKOUT ALM (RESET LOCKOUT ALARM)

Reset Lckout Alm operates when the device is in ***Non-auto mode***, if the ***Reset Lockout*** setting is set to `Select Non Auto`.

14.5.16 RECLAIM IN PROG

Reclaim in Prog output indicates that a reclaim timer is in progress and will dropout once the reclaim timer resets.

14.5.17 RECLAIM COMPLETE

Reclaim Complete operates at the end of the set reclaim time and is a fast reset. To maintain the output indication a dwell timer has to be implemented in Flexlogic Equation Editor.

14.6 AUTORECLOSE FUNCTION ALARMS

The following DDB signals will produce an alarm. These are described below.

14.6.1 AR NO SYS CHECK

The ***AR No Sys Check*** alarm indicates that the system voltages are not suitable for autoreclosing at the end of the system check time (setting ***Sys Check Time***), leading to a lockout condition. This alarm is latched and must be reset manually.

14.6.2 AR CB UNHEALTHY

The ***AR CB Unhealthy*** alarm indicates that the **CB *Healthy*** input was not energised at the end of the `CB Healthy Time`, leading to a lockout condition. This alarm is latched and must be reset manually.

14.6.3 AR LOCKOUT

The ***AR Lockout*** alarm indicates that the device is in a lockout status and that further re-close attempts will not be made. This alarm can configured to reset automatically (self-reset) or manually as determined by the setting ***Reset Lockout by.***

14.7 AUTORECLOSE OPERATION

The Autoreclose function is a complex function consisting of several modules interacting with one another. This is described in terms of separate logic diagrams, which link together by means of Internal signals (depicted by the pink-coloured boxes.

14.7.1 OPERATING MODES

The Autoreclose function has three operating modes:

- Auto Mode: Autoreclose is in service
- Non-auto Mode: Autoreclose is out of service AND the chosen protection functions are blocked if setting ***AR Deselected*** = `Block Inst Prot.`
- Live Line Mode: Autoreclose is out of service, but protection functions are NOT blocked, even if setting ***AR Deselected*** = `Block Inst Prot.`

> *Note:*
> *Live Line Mode provides extra security for live line working on the protected feeder.*

You can select the Autoreclose operating mode according to application requirements. The basic method of mode selection is determined by the setting ***AR Mode Select*** as summarised in the following table:

AR Mode Select Setting	Description
Command Mode	Auto or Non-auto mode selection is determined by the command setting ***Autoreclose Mode.***
Opto Set Mode	Auto or Non-auto mode selection is determined by an opto-input mapped to ***AR Auto Mode*** If the ***AR Auto Mode*** input is high, Auto operating mode is selected. If the ***AR Auto Mode*** input is low, Non-Auto operating mode is selected.
User Set Mode	Auto or Non-auto mode selection is controlled by the ***Telecontrol Mode*** input. If the ***Telecontrol Mode*** input is high, the setting ***Autoreclose Mode*** is used to select Auto or Non Auto operating mode. If the ***Telecontrol Mode*** input is low, it behaves as for the ***Opto Set Mode*** setting.
Pulse Set Mode	Auto or Non-auto mode selection is determined by the falling edge of ***AR Auto Mode*** signal. If the Telecontrol input is high, the operating mode is toggled between Auto and Non Auto Mode on the falling edge of the ***AR Auto Mode*** signal as it goes low. The Auto Mode pulses are produced by the SCADA system. If the Telecontrol input is low, it behaves as for the ***Opto Set Mode*** setting.

The Live Line Mode is controlled by ***AR LiveLine Mode***. If this is high, the scheme is forced into Live Line Mode irrespective of the other signals.

14.7.1.1 FOUR-POSITION SELECTOR SWITCH IMPLEMENTATION

It is quite common for some utilities to apply a four position selector switch to control the mode of operation. This application can be implemented using the signals ***AR LiveLine Mode***, ***AR Auto Mode*** and ***Telecontrol Mode***. This is demonstrated in the following diagram.

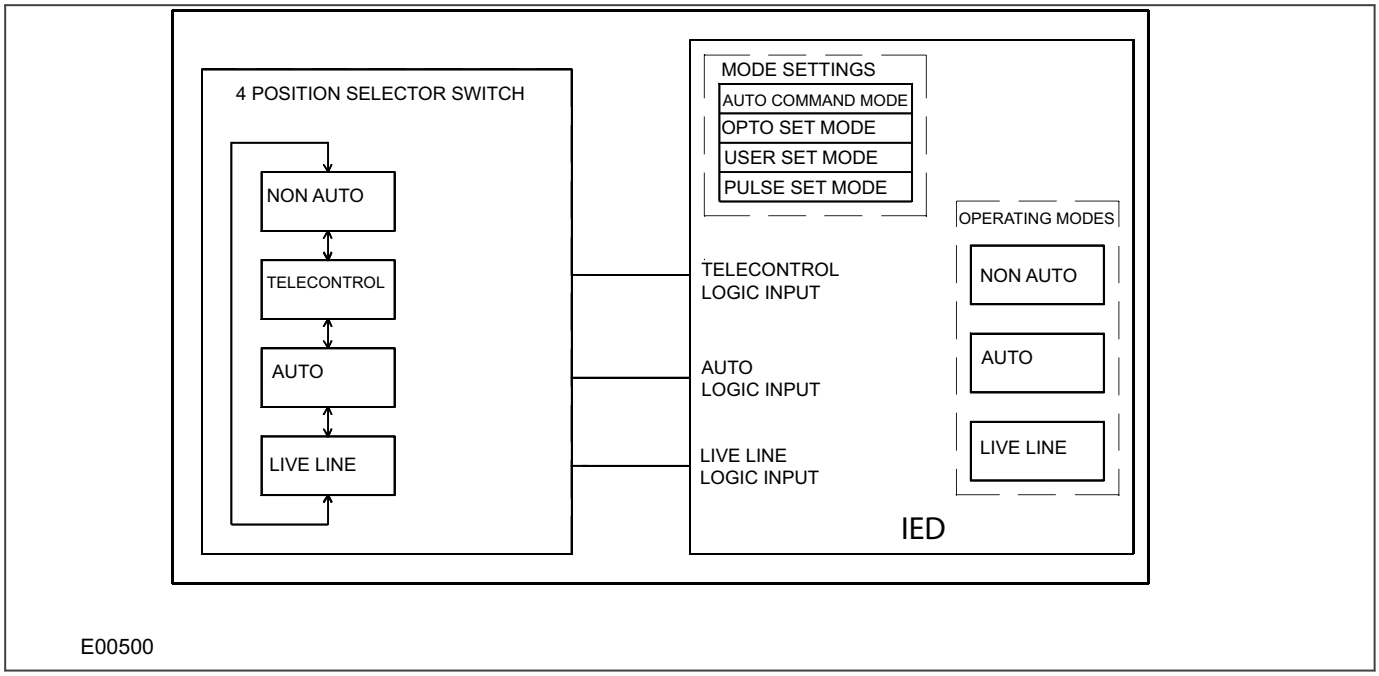

Figure 93: Four-position selector switch implementation

The required logic truth table for this arrangement is as follows:

Switch Position	AR Auto Mode	Telecontrol Mode	AR Live Line Mode
Non-auto	0	0	0
Telecontrol	0 or SCADA pulse	1	0
Auto	1	0	0
Live line	0	0	1

14.7.1.2 OPERATING MODE SELECTION LOGIC

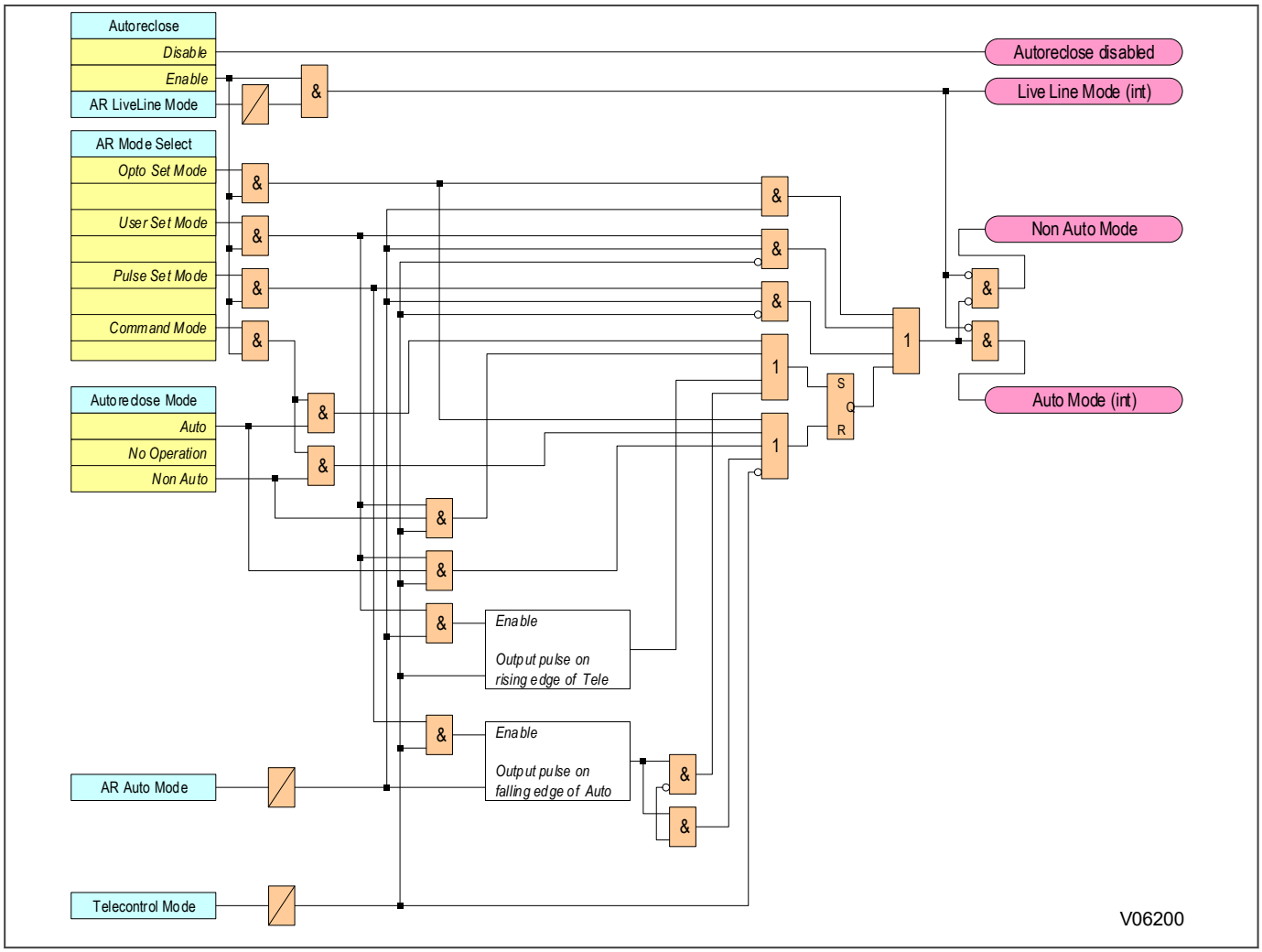

Figure 94: Autoreclose mode select logic

The mode selection logic includes a 100 ms delay for ***Auto Mode***, ***Telecontrol Mode*** and ***Live Line*** logic inputs, to ensure a predictable change of operating modes. This is of particular importance for the case when the four position switch does not have 'make-before-break' contacts. The logic also ensures that when the switch is moved from Auto or Non-Auto position to Telecontrol, the scheme remains in the previously selected mode (Auto or Non-Auto) until a different mode is selected by remote control.

For applications where live line operating mode and remote selection of Auto/Non-auto modes are not required, a simple two position switch can be arranged to activate ***Auto Mode*** input. In this case, the ***Live Line*** and ***Telecontrol Mode*** inputs would be unused.

14.7.1.3 AUTORECLOSE INITIATION

Autoreclose is usually initiated from the IEDs internal protection function. Different stages of phase overcurrent and earth fault protection can be programmed to initiate or block the main Autoreclose function. The stages of sensitive earth fault protection can also be programmed to initiate or block both the Main Autoreclose function or the SEF Autoreclose function.

The associated settings are found in the path ***AUTORECLOSE\AR INITIATE***.

For example:

If ***Phase IOC 1*** is set to `Initiate Main AR`, operation of the ***Phase IOC 1*** protection stage will initiate Autoreclose

If ***ISEF IOC>1 AR*** is set to `No Action`, operation of the ***ISEF>1*** protection stage will lead to a CB trip but no reclose. Otherwise it can be used to initiate Main autoreclose or SEF autoreclose.

> *Note:*
> *A selection must be made for each protection stage that is enabled.*

A separate protection device may also initiate Autoreclose. The Autoreclose can be initiated from a protection Trip, or when sequence coordination is required from a protection Start. If external triggering of Autoreclose is required, the following DDB signals should be mapped to opto-inputs:

- ***Ext AR Prot Trip***
- ***Ext AR Prot Strt*** (if applicable)

In addition, the setting ***Ext Prot*** should be set to `Initiate Main AR`.

Although a protection start and a protection trip can initiate an AR cycle, several checks still have to be performed before the initialisation signal is given. Some of the checks are listed below:

- ***Auto Mode*** has been selected
- ***Live line mode*** is disabled
- The number of main protection and SEF shots have not been reached
- Sequence co-ordination is enabled (for protection start to initiate AR. This is not necessary if a protection trip is doing the initiating)
- The ***CB in Service*** DDB signal is high

> *Note:*
> *The relevant protection trip must be mapped to the **Trip Command In** DDB.*

14.7.1.3.1 START SIGNAL LOGIC

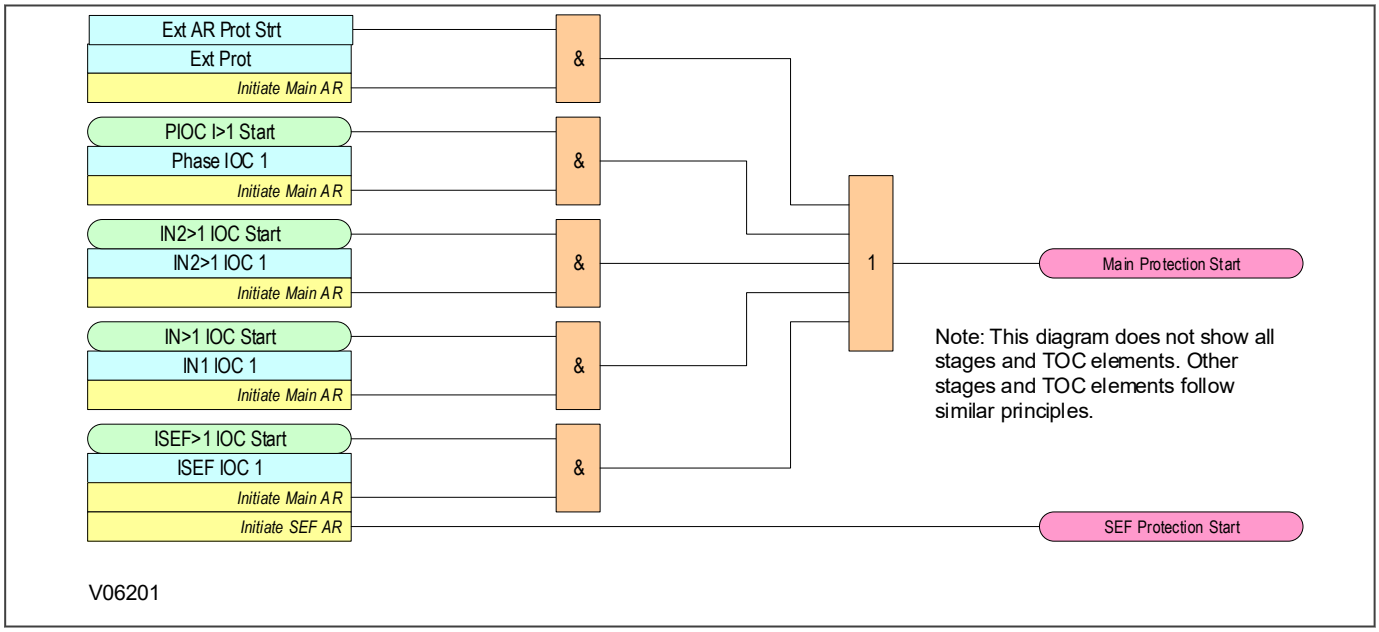

Figure 95: Start signal logic

14.7.1.3.2 TRIP SIGNAL LOGIC

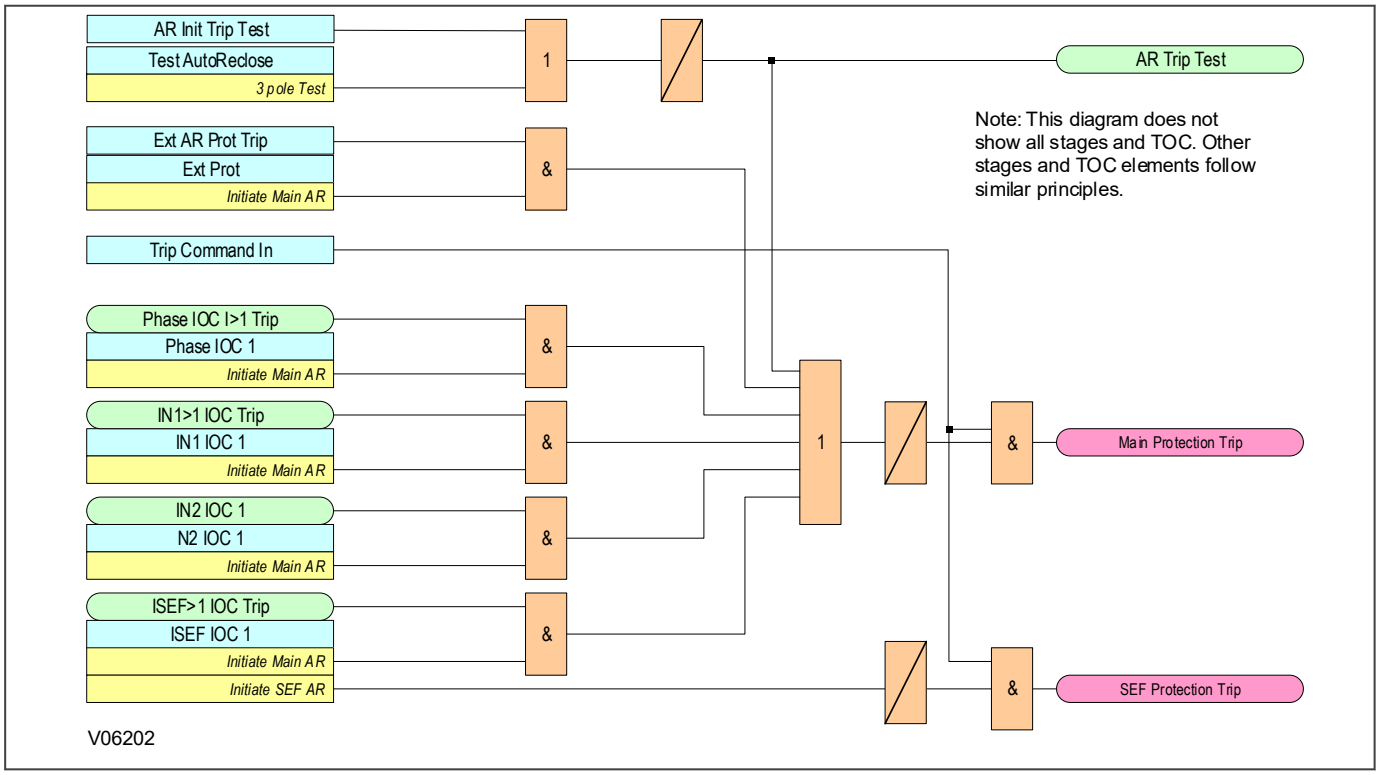

Figure 96: Trip signal logic

14.7.1.3.3 BLOCKING SIGNAL LOGIC

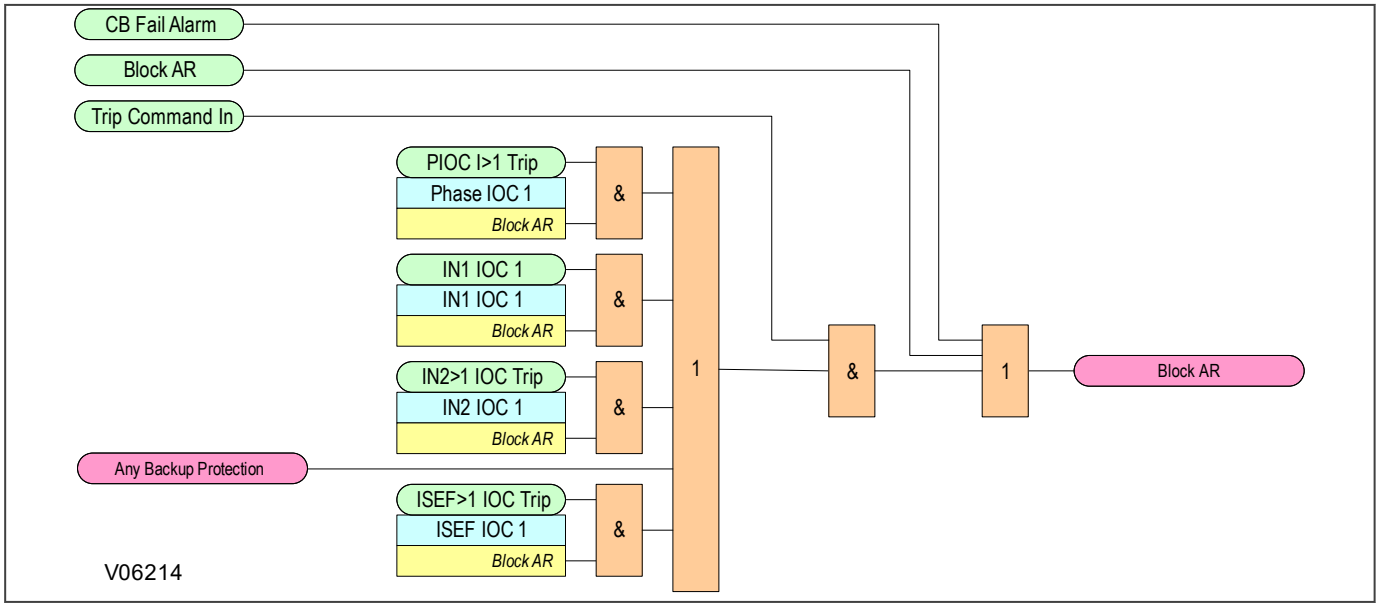

Figure 97: Blocking signal logic

14.7.1.3.4 SHOTS EXCEEDED LOGIC

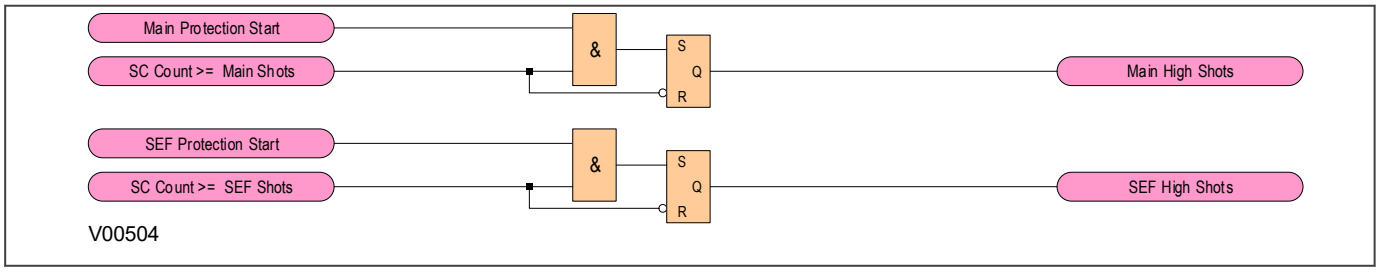

Figure 98: Shots exceeded logic

14.7.1.3.5 AR INITIATION LOGIC

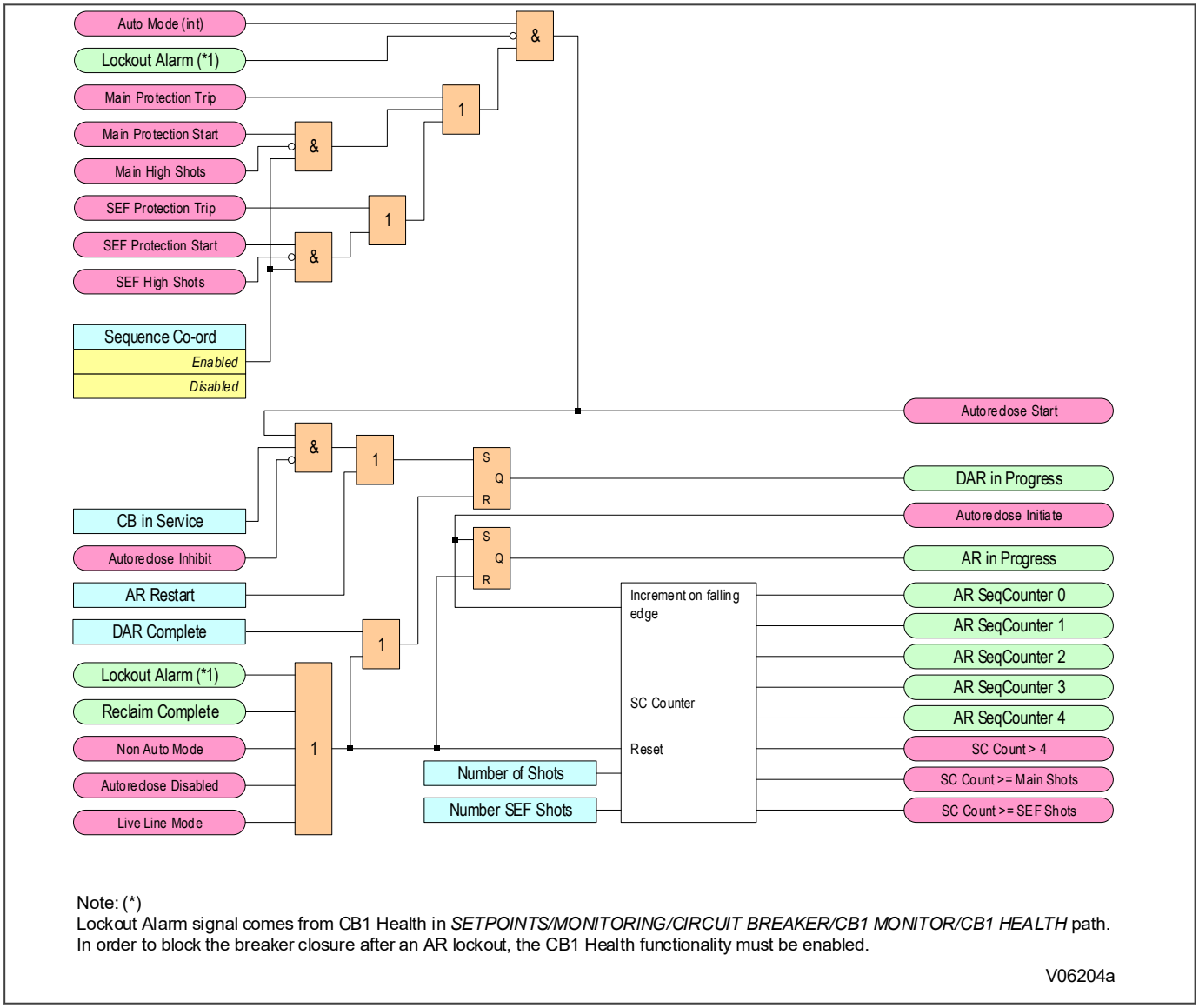

Figure 99: AR initiation logic

14.7.1.4 BLOCKING INSTANTANEOUS PROTECTION FOR SELECTED TRIPS

Instantaneous protection may be blocked or not blocked for each trip in an Autoreclose cycle. This is selected using the ***Trip (n) Main*** and ***Trip (n) SEF*** settings, where n is the number of the trip in the autoreclose cycle. These allow

the instantaneous elements of phase, earth fault and SEF protection to be selectively blocked for a CB trip sequence. For example, if ***Trip 1 Main*** is set to `No Block` and ***Trip 2 Main*** is set to `Block Inst Prot`, the instantaneous elements of the phase and earth fault protection will be available for the first trip but blocked afterwards for the second trip during the Autoreclose cycle. The logic for this is shown below.

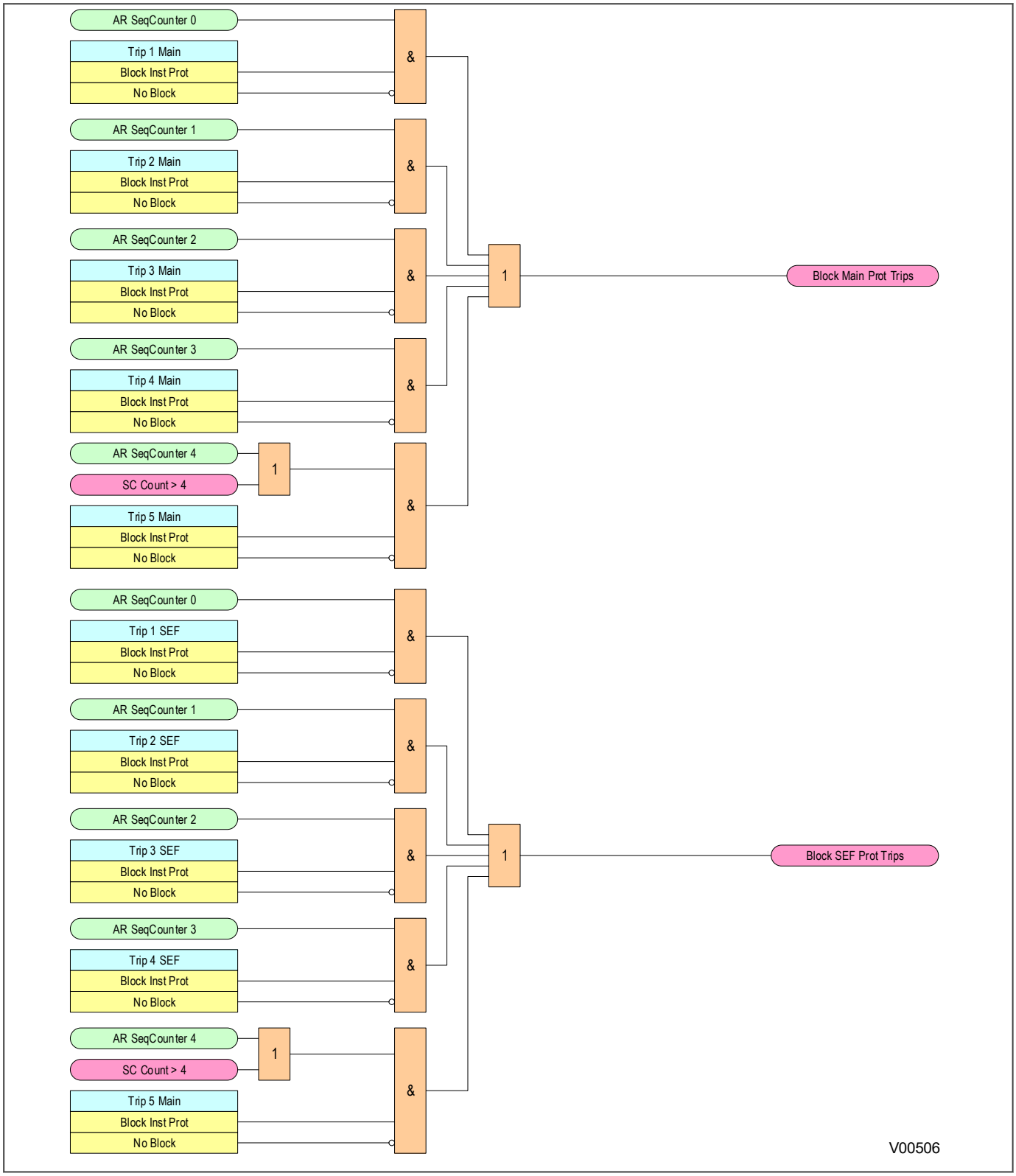

Figure 100: Blocking instantaneous protection for selected trips

14.7.1.5 BLOCKING INSTANTANEOUS PROTECTION FOR LOCKOUTS

Instantaneous protection can also be blocked for certain lockout conditions:

It is blocked when the CB maintenance lockout counter or excessive fault frequency lockout has reached its penultimate value.

For example, if the setting ***No. CB Ops Lock*** in the ***SETPOINTS\MONITORING\CIRCUIT BREAKER\CB 1 MONITOR\CB1 HEALTH\FUNCTION*** is set to 100, the instantaneous protection can be blocked to ensure that the last CB trip before lockout will be due to discriminative protection operation. This is controlled using the ***EFF Maint Lock*** setting (Excessive Fault Frequency maintenance lockout). If this is set to `Block Inst Prot`, the instantaneous protection will be blocked for the last CB Trip before lockout occurs.

Instantaneous protection can also be blocked when the IED is locked out, using the ***AR Lockout*** setting. It can also be blocked after a manual close using the ***Manual Close*** setting. When the IED is in the Non-auto mode it can be blocked by using the ***AR Deselected*** setting. The logic for these features is shown below.

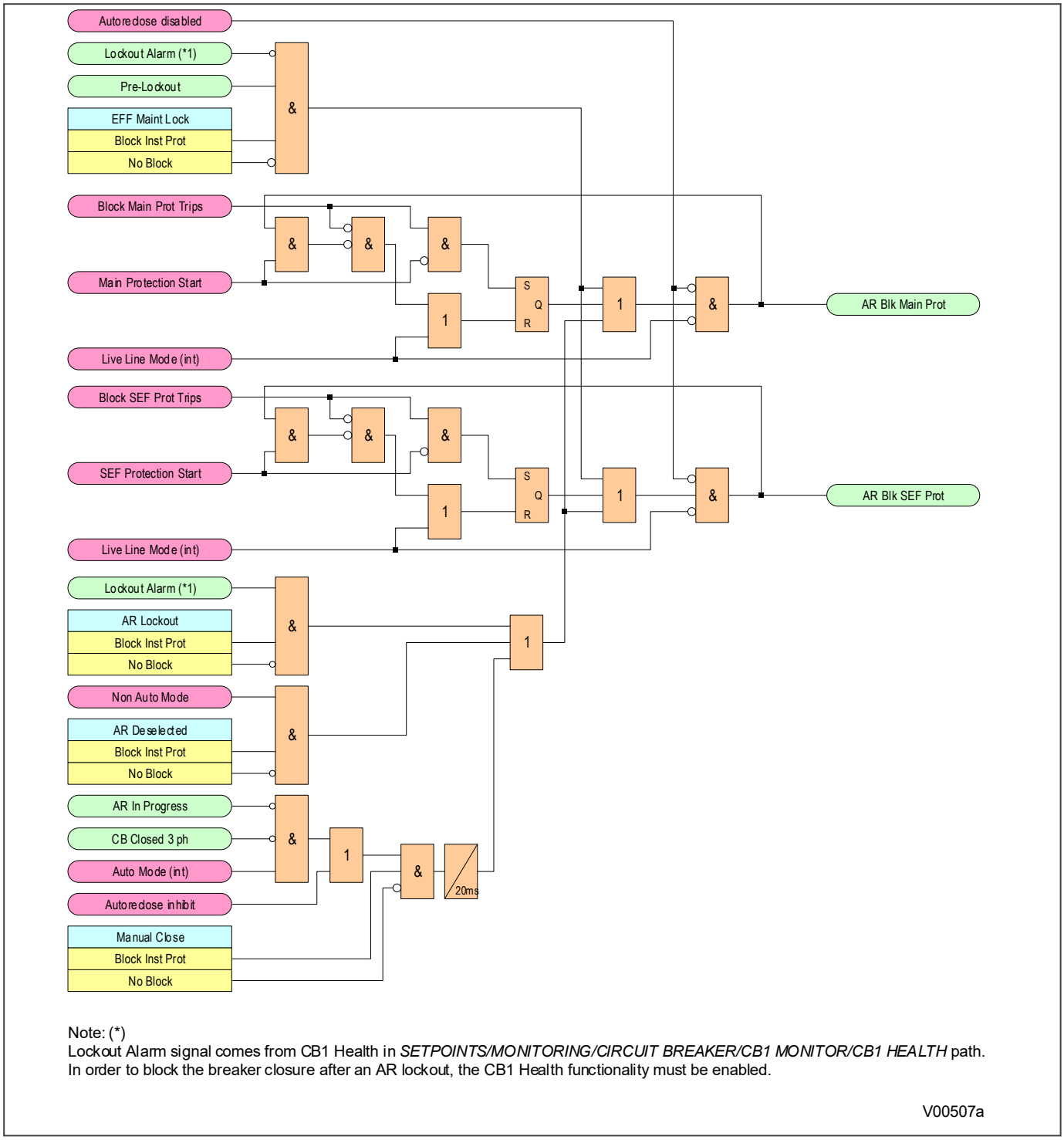

Figure 101: Blocking instantaneous protection for lockouts

14.7.1.6 DEAD TIME CONTROL

When the setting ***CS AR Immediate*** is enabled, immediate re-closure of the circuit breaker is allowed providing that both sides of the circuit breaker are live and in synchronism at any time after the dead time has started. This allows for quicker load restoration, as it is not necessary to wait for the full dead time to expire.

If ***CS AR Immediate*** is disabled, or neither Line nor Bus are live, the dead timer will continue to run, if the ***DeadTimeEnabled*** signal is high. The ***DeadTimeEnabled*** function could be mapped to an opto-input to indicate that the circuit breaker is healthy. Mapping the ***DeadTimeEnabled*** function in the Flexlogic Equation Editor

increases the flexibility by allowing it to be triggered by other conditions such as Live Line/Dead Bus. If ***DeadTimeEnabled*** is not mapped in the Flexlogic Equation Editor, it is set to `On`, so the dead time can run.

The dead time control logic is shown below.

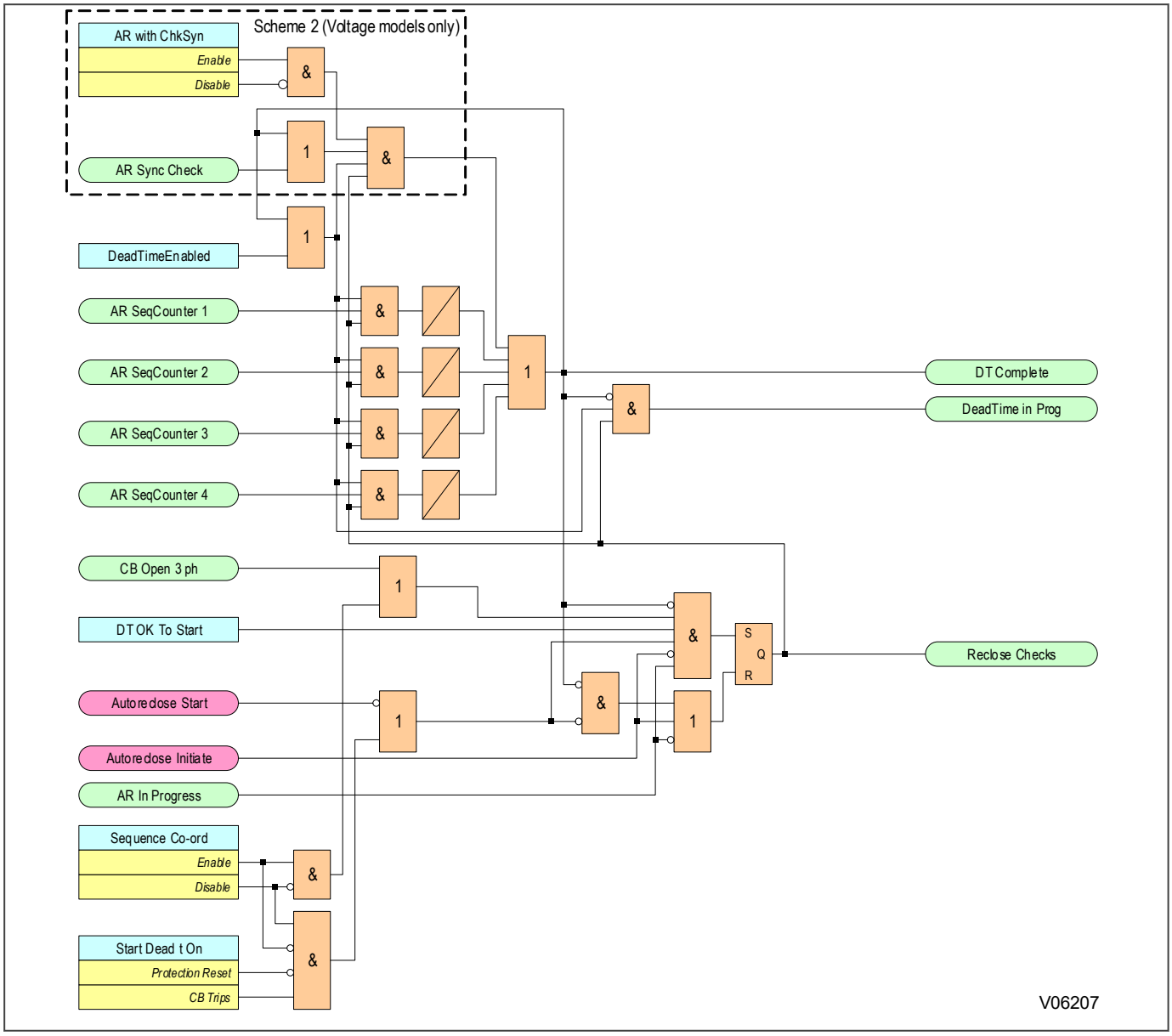

Figure 102: Dead time control logic

14.7.1.6.1 AR CB CLOSE CONTROL

Once the dead time is completed or a synchronism check is confirmed, the ***Auto Close*** signal is given, provided both the ***CB Healthy*** and the ***System Checks*** are satisfied. The ***Auto Close*** signal triggers a CB Close command via the CB Control functionality.

The AR CB Close Control Logic is as follows:

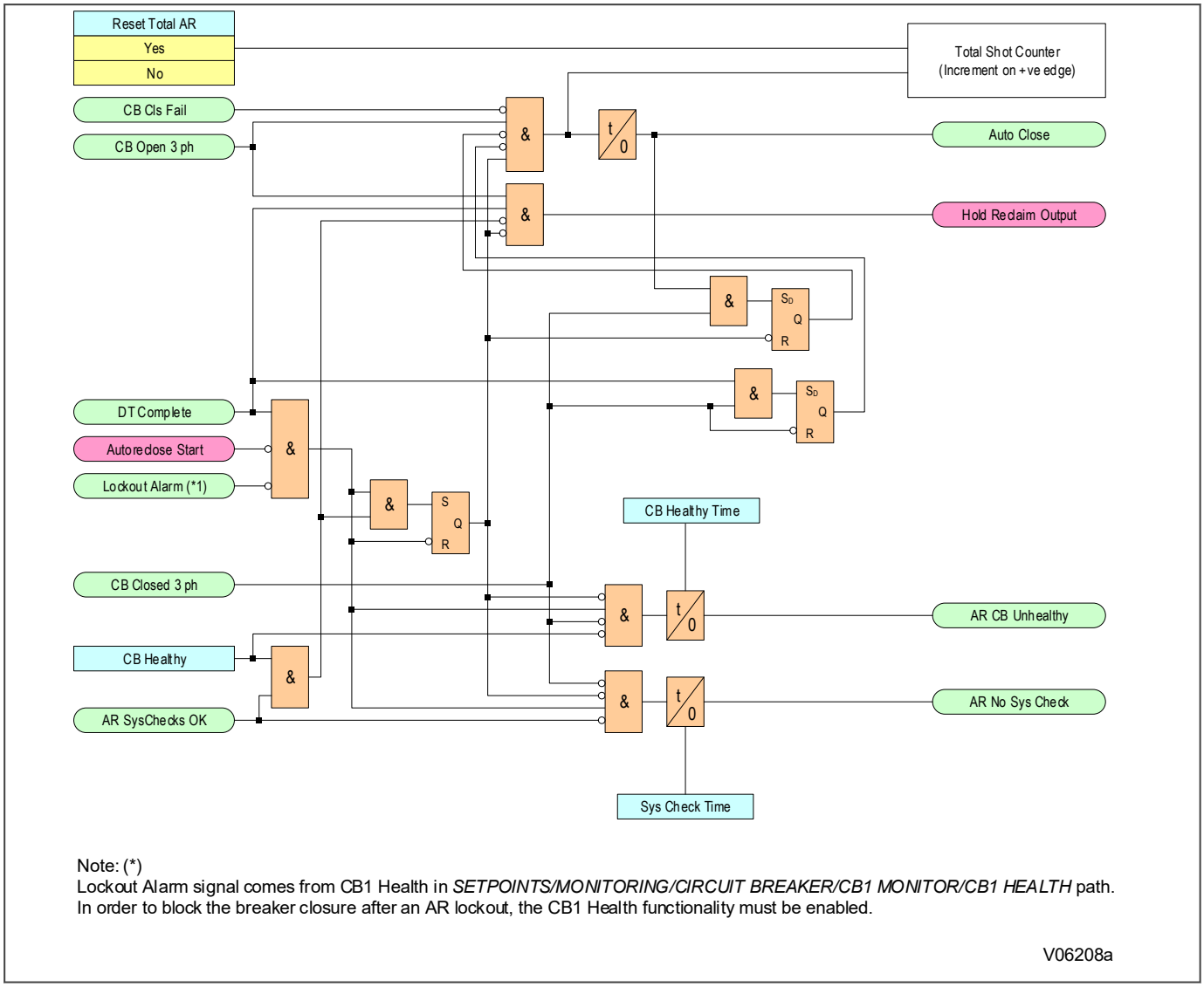

Figure 103: AR CB close control logic

14.7.1.7 AR SYSTEM CHECKS

The permission to initiate an Autoreclose depends on the following AR system check settings. These are found in the path (AUTORECLOSE under AR SYS CHECKS).

The *AR SYSTEM CHECKS* are as follows:

- ***Live/Dead Ccts***: When enabled this setting will give an ***AR Check OK*** signal when the ***LiveDead Ccts OK*** signal is high. This logic input DDB would normally be mapped in the Flexlogic Equation Editor to appropriate combinations of Line Live, Line Dead, Bus Live and Bus Dead signals.
- ***No System Checks***: When enabled this setting completely disables system checks thus allowing Autoreclose initiation under any system conditions.
- ***SysChk on Shot 1***: Can be used to disable system checks on the first AR shot.
- ***AR with ChkSyn***: Only allows Autoreclose when the system satisfies the Check Sync Stage 1 (CS1) settings in the main *SYSTEM CHECKS* menu.

The AR System Check logic is as follows:

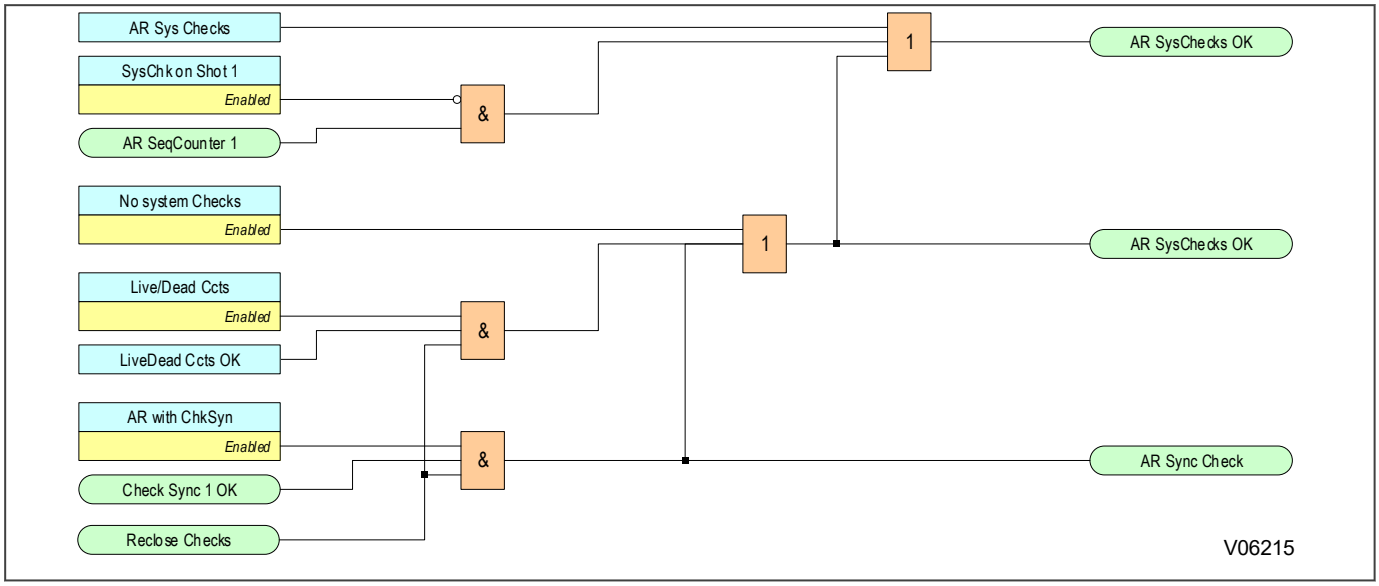

Figure 104: AR system check logic

14.7.1.8 RECLAIM TIMER INITIATION

The ***tReclaim Extend*** setting allows you to control whether the timer is suspended from the protection start contacts or not. When a setting of `No Operation` is used, the reclaim timer operates from the instant the CB is closed and will continue until the timer expires. The ***Reclaim Time*** must therefore be set in excess of the time-delayed protection operating time, to ensure that the protection can operate before the Autoreclose function is reset.

For certain applications it is advantageous to set ***tReclaim Extend*** to `On Prot Start`. This facility allows the operation of the reclaim timer to be suspended after CB re-closure by a signal from the main protection start or SEF protection start signals. This feature ensures that the reclaim time cannot time out and reset the Autoreclose before the time delayed protection has operated.

Since the reclaim timer will be suspended, it is unnecessary to use a timer setting in excess of the protection operating time, therefore a short reclaim time can be used. Short reclaim time settings can help to prevent unnecessary lockout for a succession of transient faults in a short period, for example during a thunderstorm.

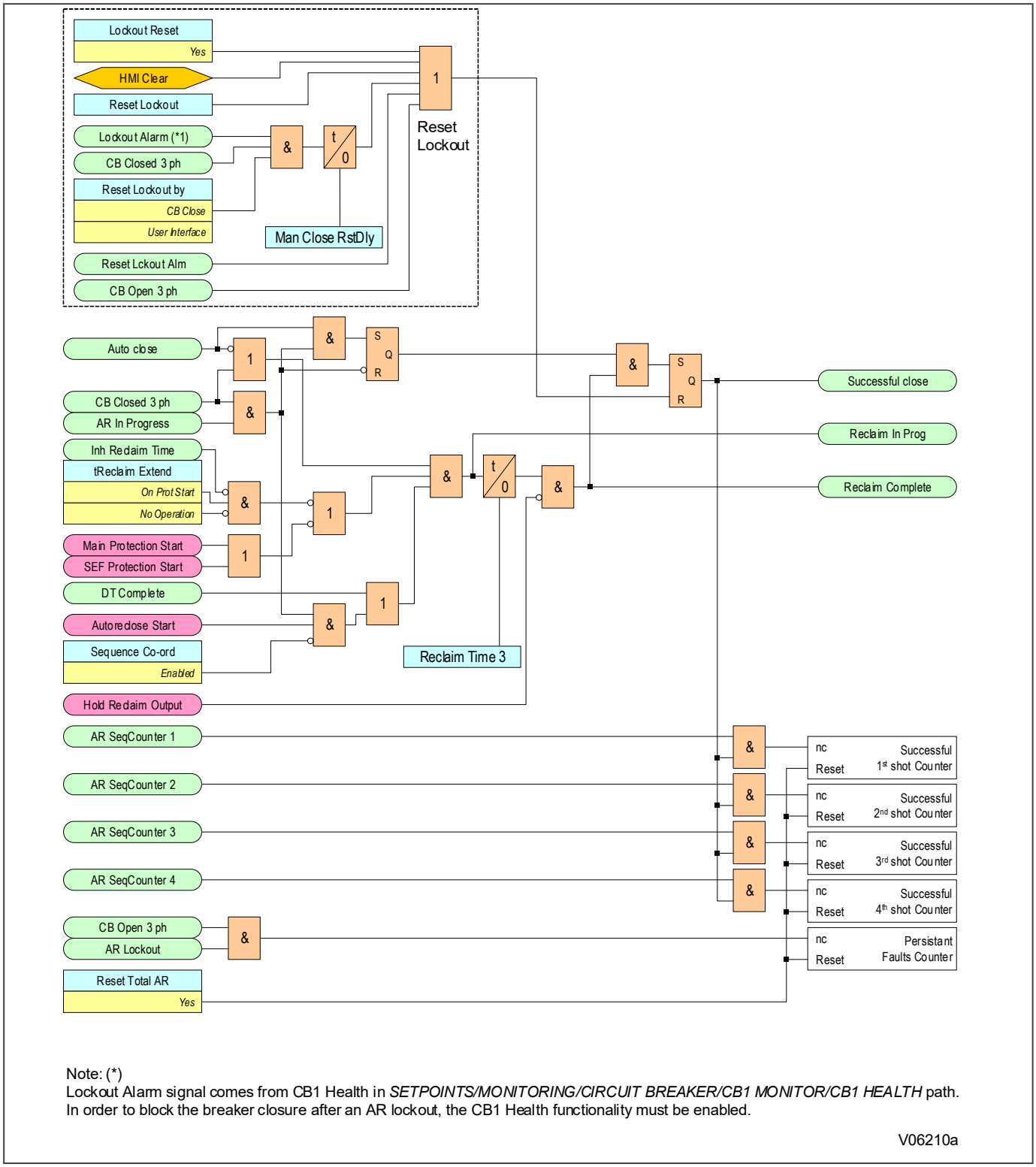

Figure 105: Reclaim time logic

14.7.1.9 AUTORECLOSE INHIBIT

To ensure that autoreclosing is not initiated for a manual CB closure on to a pre-existing fault (switch on to fault), the ***AR on Man Close*** setting can be set to Inhibited. With this setting, Autoreclose initiation is inhibited for a period equal to setting ***AR Inhibit Time*** following a manual CB closure. The logic for AR Inhibit is as follows:

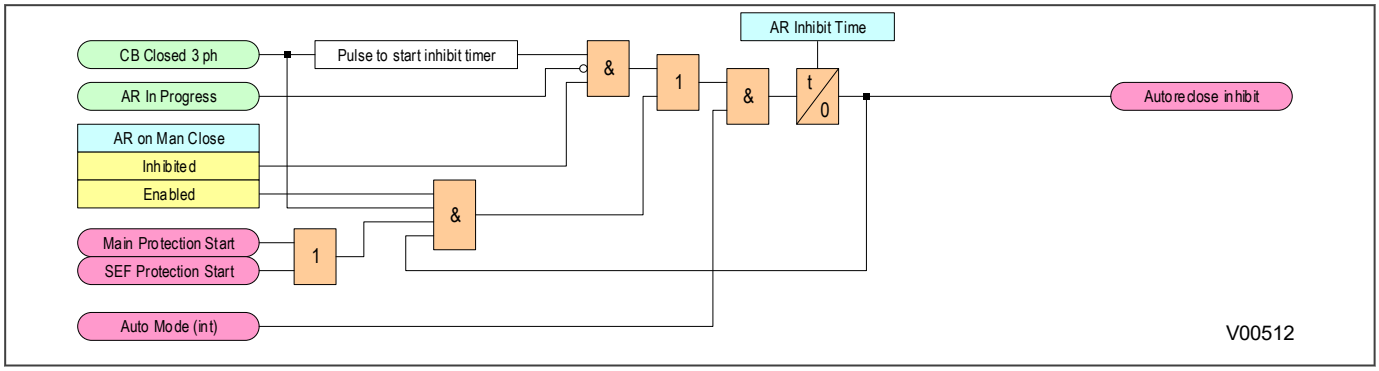

Figure 106: AR initiation inhibit

If a protection operation occurs during the inhibit period, Autoreclose is not initiated. A further option is provided by setting ***Man Close on Flt***. If this is set to `Lockout`, Autoreclose is locked out (***AR Lockout***) for a fault during the inhibit period following manual CB closure. If ***Man Close on Flt*** is set to `No Lockout`, the CB trips without reclosure, but Autoreclose is not locked out.

You may need to block selected fast non-discriminating protection in order to obtain fully discriminative tripping during the AR initiation inhibit period following CB manual close. You can do this by setting ***Manual Close*** to `Block Inst Prot`. A `No Block` setting will enable all protection elements immediately on CB closure.

If setting ***AR on Man Close*** is set to `Enabled`, Autoreclose can be initiated immediately on CB closure, and settings ***AR Inhibit Time***, ***Man Close on Flt*** and ***Manual Close*** are irrelevant.

14.7.1.10 AUTORECLOSE LOCKOUT

If protection operates during the reclaim time following the final reclose attempt, the IED is driven to lockout and the Autoreclose function is disabled until the lockout condition is reset. This produces the alarm, ***AR Lockout***. The ***Block AR*** input blocks Autoreclose and causes a lockout if Autoreclose is in progress.

Autoreclose lockout can also be caused by the CB failing to close due to an unhealthy circuit breaker (CB springs not charged or low gas pressure) or if there is no synchronisation between the system voltages. These two conditions are indicated by the alarms ***CB Unhealthy*** and ***AR No Sys Check*** This is shown in the AR Lockout logic diagram as follows:

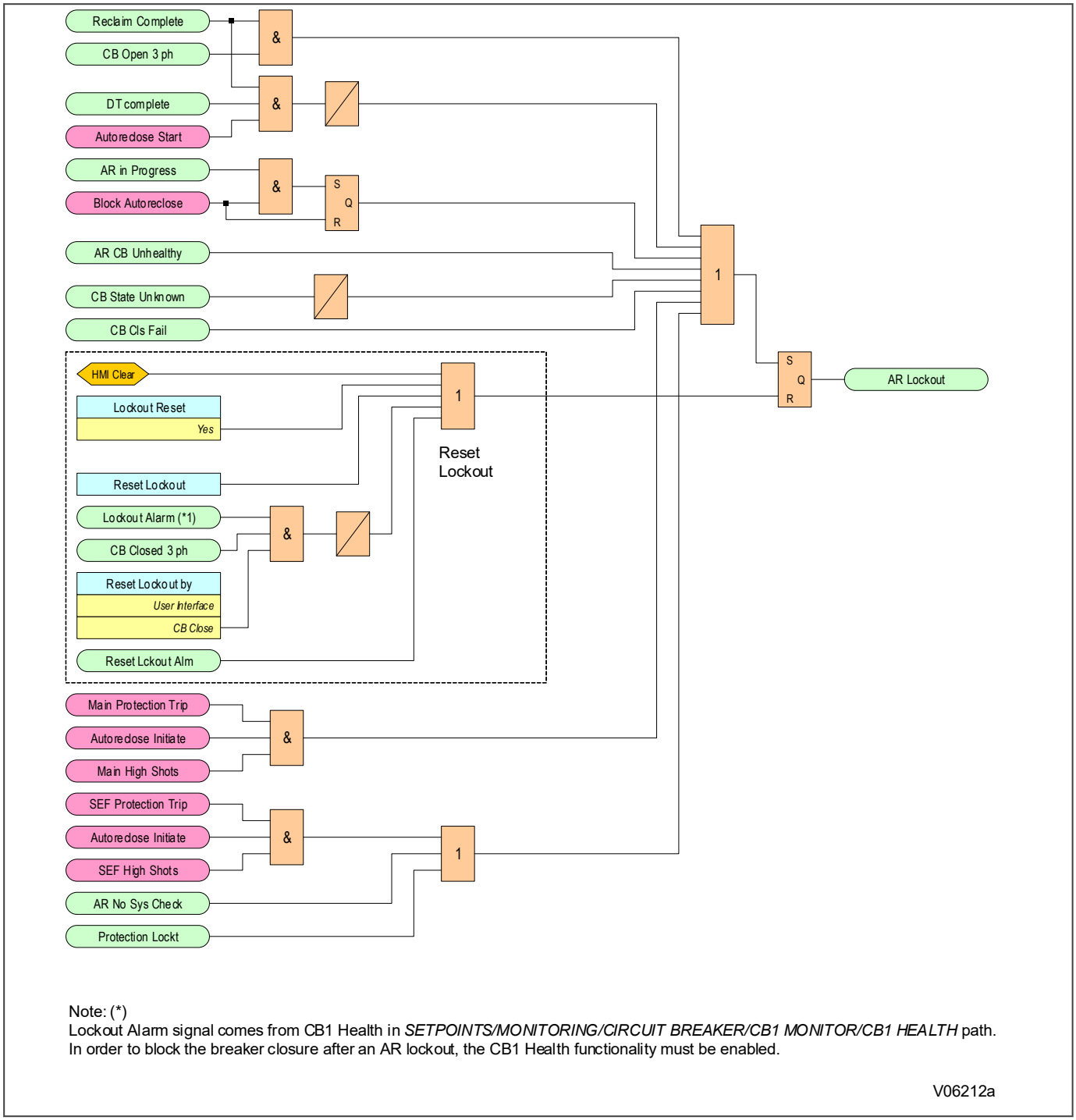

Figure 107: Overall lockout logic

AR lockout may also be due to a protection operation when the IED is in the Live Line or Non-auto modes when the setting ***Trip AR Inactive*** is set to `Lockout`. Autoreclose lockout can also be caused by a protection operation after manual closing during the ***AR Inhibit Time*** when the ***Man Close on Flt*** setting is set to `Lockout`. This is shown as follows:

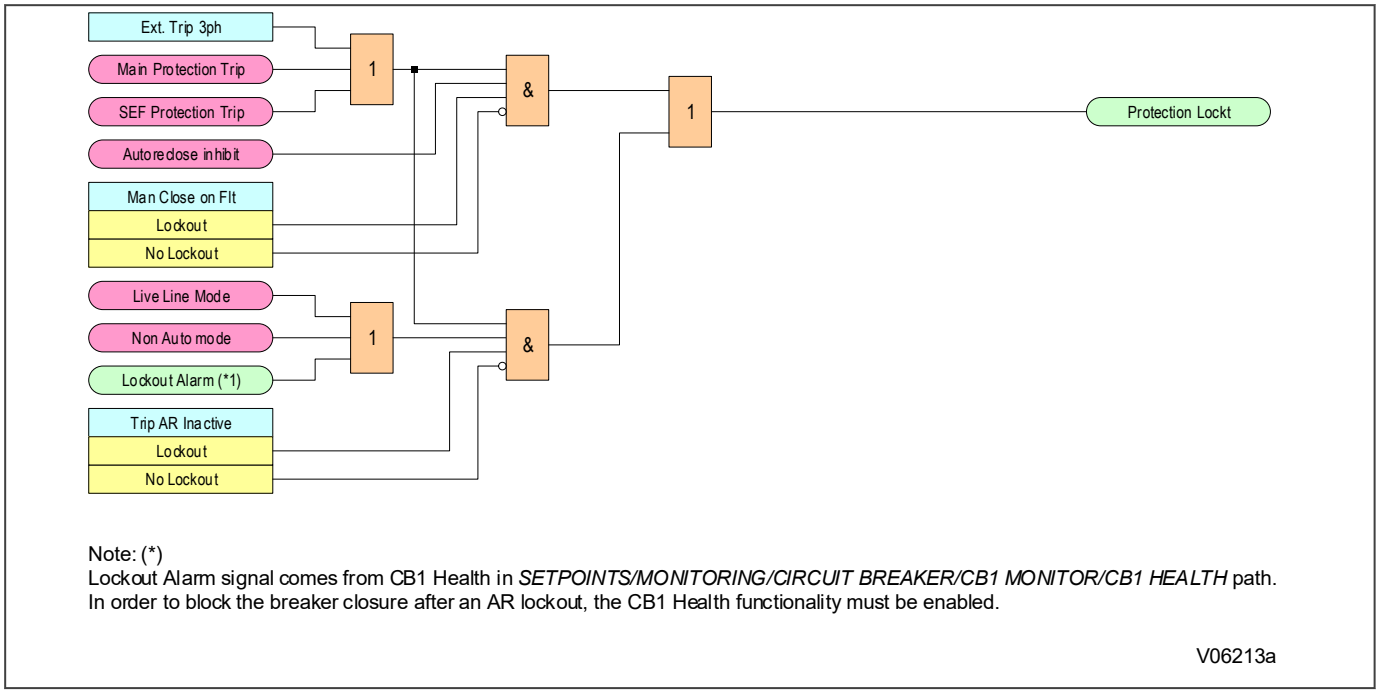

Figure 108: Lockout for protection trip when AR is not available

The ***Reset Lockout*** input can be used to reset the Autoreclose function following lockout and reset any Autoreclose alarms, provided that the signals that initiated the lockout have been removed. Lockout can also be reset from the clear key or the command ***Lockout Reset***.

The ***Reset Lockout by*** setting is used to enable or disable reset of lockout automatically from a manual close after the manual close time ***Man Close RstDly*** or to enable/disable the resetting of lockout when the IED is in the Non-auto operating mode. The reset lockout methods are summarised in the following table:

Reset Lockout Method	When Available?
User Interface via the Clear key. Note: This will also reset all other protection flags	Always
User interface via command ***Lockout Reset***	Always
Opto-input Reset lockout	Always
Following a successful manual close if ***Reset Lockout by*** is set to `CB Close`	Only when set
By selecting Non-Auto mode, provided ***Reset Lockout by*** is set to `Select NonAuto`	Only when set

14.7.1.11 SEQUENCE CO-ORDINATION

The ***Sequence Co-ord*** setting in the *AUTORECLOSE* menu allows sequence co-ordination with other protection devices, such as downstream pole-mounted reclosers.

The main protection start or SEF protection start signals indicate when fault current is present, advance the sequence count by one and start the dead time, whether the CB is open or closed. When the dead time is complete and the protection start inputs are low, the reclaim timer is initiated.

You should program both the upstream and downstream Autoreclose IEDs with the same number of shots to lockout and number of instantaneous trips before instantaneous protection is blocked. This will ensure that for a persistent downstream fault, both Autoreclose IEDs will be on the same sequence count and will block instantaneous protection at the same time. When sequence co-ordination is disabled, the circuit breaker has to be tripped to start the dead time, and the sequence count is advanced by one.

When using sequence co-ordination for some applications such as downstream pole-mounted reclosers, it may be desirable to re-enable instantaneous protection when the recloser has locked out. When the downstream recloser

has locked out there is no need for discrimination. This allows you to have instantaneous, then IDMT, then instantaneous trips again during an Autoreclose cycle. Instantaneous protection may be blocked or not blocked for each trip in an Autoreclose cycle using the ***Trip (n) Main*** and ***Trip (n) SEF*** settings, where n is the number of the trip in the autoreclose cycle.

14.7.1.12 SYSTEM CHECKS FOR FIRST RECLOSE

The ***SysChk on Shot 1*** setting in the *SYSTEM CHECKS* sub menu of the *AUTORECLOSE* menu is used to enable or disable system checks for the first reclose attempt in an Autoreclose cycle. This may be preferred when high speed Autoreclose is applied, to avoid the extra time for a synchronism check. Subsequent reclose attempts in a multi-shot cycle will, however, still require a synchronism check.

14.8 SETTING GUIDELINES

14.8.1 NUMBER OF SHOTS

There are no clear cut rules for defining the number of shots for a particular application. Generally medium voltage systems use only two or three shot Autoreclose schemes. However, in certain countries, for specific applications, a four-shot scheme is used. A four-shot scheme has the advantage that the final dead time can be set sufficiently long to allow any thunderstorms to pass before reclosing for the final time. This arrangement prevents unnecessary lockout for consecutive transient faults.

Typically, the first trip, and sometimes the second, will result from instantaneous protection. Since most faults are transient, the subsequent trips will be time delayed, all with increasing dead times to clear semi-permanent faults.

An important consideration is the ability of the circuit breaker to perform several trip-close operations in quick succession and the affect of these operations on the circuit maintenance period.

On EHV transmission circuits with high fault levels, only one re-closure is normally applied, because of the damage that could be caused by multiple re-closures.

14.8.2 DEAD TIMER SETTING

The choice of dead time is dependent on the system. The main factors that can influence the choice of dead time are:

- Stability and synchronism requirements
- Operational convenience
- Load
- The type of circuit breaker
- Fault de-ionising time
- The protection reset time

14.8.2.1 STABILITY AND SYNCHRONISM REQUIREMENTS

It may be that the power transfer level on a specific feeder is such that the systems at either end of the feeder could quickly fall out of synchronism if the feeder is opened. If this is the case, it is usually necessary to reclose the feeder as quickly as possible to prevent loss of synchronism. This is called high speed autoreclosing (HSAR). In this situation, the dead time setting should be adjusted to the minimum time necessary. This time setting should comply with the minimum dead time limitations imposed by the circuit breaker and associated protection, which should be enough to allow complete deionisation of the fault path and restoration of the full voltage withstand level. Typical HSAR dead time values are between 0.3 and 0.5 seconds.

On a closely interconnected transmission system, where alternative power transfer paths usually hold the overall system in synchronism even when a specific feeder opens, or on a radial supply system where there are no stability implications, it is often preferred to leave a feeder open for a few seconds after fault clearance. This allows the system to stabilise, and reduces the shock to the system on re-closure. This is called slow or delayed auto-reclosing (DAR). The dead time setting for DAR is usually selected for operational convenience.

14.8.2.2 OPERATIONAL CONVENIENCE

When HSAR is not required, the dead time chosen for the first re-closure following a fault trip is not critical. It should be long enough to allow any resulting transients resulting to decay, but not so long as to cause major inconvenience to consumers who are affected by the loss of the feeder. The setting chosen often depends on service experience with the specific feeder.

Typical first shot dead time settings on 11 kV distribution systems are 5 to 10 seconds. In situations where two parallel circuits from one substation are carried on the same towers, it is often arranged for the dead times on the

two circuits to be staggered, e.g. one at 5 seconds and the other at 10 seconds, so that the two circuit breakers do not reclose simultaneously following a fault affecting both circuits.

For multi-shot Autoreclose cycles, the second shot and subsequent shot dead times are usually longer than the first shot, to allow time for semi-permanent faults to burn clear, and for the CB to recharge. Typical second and third shot dead time settings are 30 seconds and 60 seconds respectively.

14.8.2.3 LOAD REQUIREMENTS

Some types of electrical load might have specific requirements for minimum and/or maximum dead time, to prevent damage and minimise disruption. For example, synchronous motors are only capable of tolerating extremely short supply interruptions without losing synchronism. In practise it is desirable to disconnect the motor from the supply in the event of a fault; the dead time would normally be sufficient to allow a controlled shutdown. Induction motors, on the other hand, can withstand supply interruptions up to typically 0.5 seconds and re-accelerate successfully.

14.8.2.4 CIRCUIT BREAKER

For HSAR, the minimum dead time of the power system will depend on the minimum time delays imposed by the circuit breaker during a tripping and reclose operation.

After tripping, time must be allowed for the mechanism to reset before applying a closing pulse, otherwise the circuit breaker might fail to close correctly. This resetting time will vary depending on the circuit breaker, but is typically 0.1 seconds.

Once the mechanism has reset, a CB Close signal can be applied. The time interval between energising the closing mechanism and making the contacts is called the closing time. A solenoid closing mechanism may take up to 0.3 seconds. A spring-operated breaker, on the other hand, can close in less than 0.1 seconds.

Where HSAR is required, for the majority of medium voltage applications, the circuit breaker mechanism reset time itself dictates the minimum dead time. This would be the mechanism reset time plus the CB closing time. A solenoid mechanism is not suitable for high speed Autoreclose as the closing time is generally too long.

For most circuit breakers, after one reclosure, it is necessary to recharge the closing mechanism energy source before a further reclosure can take place. Therefore the dead time for second and subsequent shots in a multi-shot sequence must be set longer than the spring or gas pressure recharge time.

14.8.2.5 FAULT DE-IONISATION TIME

For HSAR, the fault deionising time may be the most important factor when considering the dead time. This is the time required for ionised air to disperse around the fault position so that the insulation level of the air is restored. You cannot accurately predict this, but you can obtain an approximation from the following formula:

Deionising time = (10.5 + ((system voltage in kV)/34.5))/frequency

Examples:

At 66 kV 50 Hz, the deionising time is approximately 0.25 s

At 132 kV 60 Hz, the deionising time is approximately 0.29 s

14.8.2.6 PROTECTION RESET TIME

It is essential that any time-graded protection fully resets during the dead time, so that correct time discrimination will be maintained after reclosing on to a fault. For HSAR, instantaneous reset of protection is required. However at distribution level, where the protection is predominantly made up of overcurrent and earth fault devices, the protection reset time may not be instantaneous. In the event that the circuit breaker recloses on to a fault and the protection has not fully reset, discrimination may be lost with the downstream protection. To avoid this condition the dead time must be set in excess of the slowest reset time of either the local device or any downstream protection.

Typical 11/33 kV dead time settings are as follows:

1st dead time = 5 - 10 seconds

2nd dead time = 30 seconds

3rd dead time = 60 - 180 seconds

4th dead time = 1 - 30 minutes

14.8.3 RECLAIM TIMER SETTING

A number of factors influence the choice of the reclaim timer:

- Supply continuity: Large reclaim times can result in unnecessary lockout for transient faults.
- Fault incidence/Past experience: Small reclaim times may be required where there is a high incidence of lightning strikes to prevent unnecessary lockout for transient faults.
- Spring charging time: For HSAR the reclaim time may be set longer than the spring charging time to ensure there is sufficient energy in the circuit breaker to perform a trip-close-trip cycle. For delayed Autoreclose there is no need as the dead time can be extended by an extra CB healthy check window time if there is insufficient energy in the CB. If there is insufficient energy after the check window time the IED will lockout.
- Switchgear maintenance: Excessive operation resulting from short reclaim times can mean shorter maintenance periods. A minimum reclaim time of more than 5 seconds may be needed to allow the circuit breaker time to recover after a trip and close before it can perform another trip-close-trip cycle. This time will depend on the circuit breaker's duty rating.

The reclaim time must be long enough to allow any time-delayed protection initiating Autoreclose to operate. Failure to do so would result in premature resetting of the Autoreclose scheme and re-enabling of instantaneous protection. If this condition arose, a permanent fault would effectively look like a number of transient faults, resulting in continuous autoreclosing, unless additional measures are taken such as excessive fault frequency lockout protection.

Sensitive earth fault protection is applied to detect high resistance earth faults and usually has a long time delay, typically 10 - 15 seconds. This longer time may have to be taken into consideration, if autoreclosing from SEF protection. High resistance earth faults are rarely transient and may be a danger to the public. It is therefore common practise to block Autoreclose by operation of sensitive earth fault protection and lockout the circuit breaker.

A typical 11/33 kV reclaim time is 5 - 10 seconds. This prevents unnecessary lockout during thunderstorms. However, reclaim times of up to 60 - 180 seconds may be used elsewhere in the world.

CHAPTER 15

MONITORING AND CONTROL

15.1 CHAPTER OVERVIEW

As well as providing a range of protection functions, the product includes comprehensive monitoring and control functionality.

For correct retrieval of the Records, time synchronization must be performed at least once when the device is first put into service, before the recordings start.

This chapter contains the following sections:

Chapter Overview	259
Event Records	260
Disturbance Recorder	262
Data Logger	264
Fault Records	266
Event Data	268
Flex States	269
Flex Elements	270
Measurements	272
Power Factor	274
Breaker Arcing Current	279
Voltage Disturbance	282
Voltage Interruptions	286
CB Health Monitoring	288
CB State Monitoring	292
Setpoint Group	294
Select Before Operate	295
Circuit Breaker Control	300
Switches Status and Control	315
Pole Dead Function	319
Synchrocheck	321
Harmonic Detection	326
Pole Discrepancy	328
Demand	334
Digital Counters	336
Loss Of Communications	337
Transient Earth Fault Detection	338
High Impedance Fault (HiZ) Detection	348
Trip Bus	354
Digital Elements	356
Arc Flash	359

15.2 EVENT RECORDS

Multilin Agile IEDs record events in an event log. This allows the user to establish the sequence of events that led up to a particular situation. For example, a change in a digital input signal or protection element output signal would cause an event record to be created and stored in the event log. This could be used to analyse how a particular power system condition was caused. These events are stored in the IEDs non-volatile memory. Each event is time tagged.

The event records can be displayed on an IEDs front panel but it is easier to view them through the EnerVista Configuration software.

The event records (Events) are available and always enabled for device, inputs, outputs, protection, monitoring and control features.

For Virtual Inputs and Virtual Outputs, the events can be ***Enabled***/***Disabled*** at the Events setting under the ***SETPOINTS\INPUTS\VIRTUAL INPUTS\VIRTUAL I/P (n)*** path for Virtual Inputs, and ***SETPOINTS\INPUTS \VIRTUAL OUTPUTS\VIRTUAL O/P (n)*** path for Virtual Outputs, where (n) is the number of Virtual Inputs and Outputs (1 to 128).

The Events (and their associated Event Data) can be accessed, either through the IEDs front panel (for Events and Event Data visualization with no file retrieval) at the ***RECORDS\EVENTS*** menu, or through the EnerVista Configuration software (for Events and Event Data visualization and file retrieval) by double clicking on the Evt file available at the ***Browse Data*** sub tab under the ***Records*** tab. The event file (*.evt) can be exported and saved in a computer. This file contains some information for each event: event number, date and time, cause of event, and the values of the analogue parameters corresponding to the Event Data (if configured). All the events are displayed chronologically. The first event shown is always the latest event.

The device is capable of storing up to 2048 event records.

The Events can be deleted using the ***Clear Events*** command accessible through the Commands window on the ***Monitor*** tab on EnerVista Configuration software. The Events can also be deleted using the Clear All Records command (take into account that the Clear All Records command will clear all the records in the device, not just the Events). The Events can be also deleted by accessing to the same commands but under the ***SETPOINT\DEVICE \CLEAR RECORDS*** path, either directly through the IEDs front panel or through the EnerVista Configuration software ***Setting*** tab.

15.2.1 EVENT TYPES

There are several different types of event:

- Opto-input events (Change of state of opto-input)
- Relay output events (Change of state of output relay contact)
- Alarm and self-test error events
- Fault record events
- Standard events
- Security events

Standard events are further sub-categorised internally to include different pieces of information. These are:

- Protection events (starts and trips)
- Platform events

Note:
The first event in the list is the most recent event to have occurred.

15.2.1.1 OPTO-INPUT EVENTS

If one or more of the opto-inputs has changed state since the last time the protection algorithm ran (which runs at several times per cycle), a new event is created, which logs the logic states of the opto-inputs that have changed their status.

The opto-inputs status is also shown under the ***DEVICE STATUS***/***OPTO INPUTS*** path. The opto-inputs status is checked and updated at every protection algorithm run, whereas the information in the event log, although checked at every protection run, it is a snapshop at the time when the change of status of the opto-input takes place.

15.2.1.2 IED OUTPUT EVENTS

If one or more of the relay output contacts has changed state since the last time the protection algorithm ran (which runs at several times per cycle), a new event is created, which logs the logic states of the relay outputs that have changed their status.

The relay outputs status is also shown under the ***DEVICE STATUS***/***RELAY OUTPUTS*** path. The relay outputs status is checked and updated at every protection algorithm run, whereas the information in the event log, although checked at every protection run, it is a snapshot at the time when the change of status of the relay outputs takes place.

15.2.1.3 ALARM AND SELF-TEST ERROR EVENTS

The IED monitors itself on power up and continually thereafter. If it notices any problems, it will register an alarm event.

The same information is also shown in the ***Targets*** menu. This information is updated continuously, whereas the information in the event log is a snapshot at the time when the event was created.

15.2.1.4 FAULT RECORD EVENTS

An event record is created for every fault the IED detects. If the protection function that will operate for that fault is set to trip, the IED will record the trip event associated to that fault in the event recorder and its corresponding Last Trip Data information in a separate 'LastTripData' file containing the values of the parameters set in ***Event Data*** menu under the ***SETPOINTS\DEVICE\EVENT DATA*** path. For more details, refer to the Event Data and Last Trip Data sections.

The Last Trip Data file will only available if the protection function is set to trip. If the protection function is not set to trip, the trip timestamp data and event data will be available in the event recorder but the 'LastTripData' file will not be created.

In IEDs with Fault Locator (21FL) available (Cortec dependent feature), a fault report is triggered by the ***Fault Rpt Trig*** signal if the ***Function*** setting in the ***FAULT RECORDS*** menu is set to `Enabled`. The event recorder will show the timestamp of the ***Fault Rpt Trig*** signal. The fault report file can be retrieved using EnerVista Configuration under the ***Records*** menu. There are up to 25 fault records available. The Fault report records the values of up to 32 configurable analogue channels for the duration of the fault. The values of the analogue channels and the rest of the Fault Records settings, ***Pre-Fault Trig.***, ***Fault Trigger***, etc.) can be configured under the ***SETPOINTS\DEVICE \FAULT RECORDS*** path. For more details, refer to the Fault Records section.

15.2.1.5 SECURITY EVENTS

An event record is generated each time a setting that requires an access level is executed.

15.2.1.6 PROTECTION EVENTS

The IED logs protection starts and trips as individual events. Protection events are special types of standard events.

Not all signals can generate an event. Those that can are shown in the *RECORD/EVENTS* menu when an event takes place.

15.3 DISTURBANCE RECORDER

The Disturbance Recorder feature allows the waveform capture of the calibrated analogue channels, together with selected values for the configurable digital and analogue channels available in the device. The configurable digital channels (up to 64) may be inputs, outputs, or internal digital signals (FlexLogic). The configurable analogue channels (up to 16) may be any analogue signal (FlexAnalog) available in the IED. The disturbance records can be extracted using the EnerVista Configuration software or using the SCADA system. The disturbance record file can be stored in COMTRADE format. This allows the use of other software packages other than EnerVista Configuration software to view the recorded data.

The user can configure how disturbance records are handled in case the available memory has reached capacity by selecting one of the options in the ***Trigger mode*** setting (`Overwrite` or `Protected` mode).

When `Overwrite` mode is selected, the new records overwrite the old ones, meaning the IED will always keep the newest records as per the selected number of records.

When `Protected` mode is selected, the IED will keep the maximum number of records corresponding to the value selected in the ***Number of Record*** setting, without saving further records beyond the value.

The number of cycles captured in a single disturbance record varies based on the ***Number of Records*** and ***Sample per Cycle*** setting values selected.

There is a fixed amount of data storage for the Disturbance Recorder: the higher the sampler rate, the less number of cycles captured per record. The number of records is user selectable up to 16 and the sampling rate can be selected from 8 up to 128 samples/cycle (8/16/32/64/128). The 128 samples/cycle used in the Disturbance Recorder is an interpolation from the 64 samples/cycle used for protection purposes.

To calculate the length in time corresponding to the length in cycles for a disturbance record the frequency of the system should be considered: *Length in seconds = Length in cycles * 1/System frequency*. For example, if the number of records is 1 and the sample rate is 8, the length in cycles would be 4895.125 and the length in time would be 81.47 seconds at a system frequency of 60 Hz and 97.77 seconds at 50 Hz.

The cycles per record (approximated values) for certain configuration of settings are shown in the following table:

Number of Records	Sample Rate	Length-Cycles
1	128	1064.125
1	64	1826.5
1	32	2846
1	16	3947.625
1	8	4895.125
5	128	354.625
5	64	608.75
5	32	948.625
5	16	1315.875
5	8	1631.625
16	128	125.125
16	64	214.875
16	32	334.75
16	16	464.375
16	8	575.875

The ***Trigger Position*** setting sets the value of pre-fault and post-fault within a disturbance record. If set to 20%, 20% of the stored file would be pre-fault data and 80% would be fault and post-fault data.

The disturbance record file can be generated upon change of state of at least one of the assigned triggers: ***Trigger Source***, ***Trigger on Start***, ***Trigger on Oper.***, ***Trigger on Alarm*** or ***Trigger on Trip***.

The Disturbance Recorder is supplied with data by the protection and control task once per cycle and collates the received data into the required length disturbance record.

It is not possible to view the disturbance records locally via the front panel LCD. The disturbance records should be extracted from the IED using suitable setting application software such as EnerVista Configuration or via SCADA system.

The Disturbance Recorder setting configuration can be made at the ***SETPOINTS\DEVICE\DISTURB RECORDER*** path accessing directly through the IEDs front panel, or through the EnerVista Configuration software ***Setting*** tab.

The Disturbance Recorder files can be visualized using the EnerVista Configuration software by double clicking on the ***Osc(n)*** file available at the ***Browse Data*** sub tab under the ***Records*** tab, where (n) is the number of the disturbance record file. The file in Comtrade format (*.cfg, *.dat, *.hdr) can be exported and saved on a computer. A summary of the data contained in the file is also provided and can be accessed by double clicking on the ***View Summary*** icon for each file.

Basic Disturbance Recorder information, such as: records since last clear, total number of records, last clear date time and date and time of the record, can be also accessed through the IEDs front panel at ***RECORDS \DISTURBANCE***, but the recommended way of accessing to the Disturbance Recorder data is using the EnerVista Configuration software.

The Disturbance Recorder files can be deleted using the ***Clear Transient Records (Disturb Recorder)*** command accessible through the ***Commands*** window on the ***Monitor*** tab on EnerVista Configuration software. The files can also be deleted using the ***Clear All Records*** command (this command will clear all the records in the device, not just those in the Disturbance Recorder). The Clear Records commands are also available at the ***SETPOINT \DEVICE\CLEAR RECORDS*** path, directly through the IEDs front panel, or through the EnerVista Configuration software ***Setting*** tab.

A ***Trigger Waveform (Disturb Recorder)*** command is also available in EnerVista Configuration ***Commands*** menu in ***Monitor*** tab. This command allows to create a Disturbance Record by user command. For more detail information regarding the Disturbance Recorder configuration refer to the dedicated Disturbance Recorder section in this chapter.

Note:
*Use **Any Trip** Flexlogic operand for selecting the Relay 1 Trip behaviour for any setting using Flexlogic.*

15.4 DATA LOGGER

The Data Logger samples and records up to 16 analogue parameters at a configured rate defined by the user. All data is stored in non-volatile memory as a 1 MB file, where the information is retained upon an IED control power loss.

The Data Logger can be configured with a few channels over a long period of time, or with larger number of channels for a shorter period of time. The IED automatically partitions the available memory between the channels in use.

The selection of the rate for logging data also affects the duration of recorded data. The Data Logger has longer duration for sampling rates at longer periods of time (i.e. `1 minute`, `30 minutes`, `1 hour`), as compared to sampling rates at short periods (i.e. `1 cycle`, or `1 second`).

The length covered by the Data Logger record can be estimated with the following formula (being 0x100000 1MB in hexadecimal):

$$\text{Data Logger Record Length} = \frac{0x100000}{8 + \text{Actual Number of Configure Analogue Channels} \cdot 2} \cdot \text{Rate}$$

The Data Logger record length (approximated values) for certain configuration of settings are shown in the following table:

File Size	Sampling Rate [sec]		Number of Channels	Time-Window Covered			
				[sec]	[min]	[hour]	[day]
1048576	1 cycle	60 Hz (0.0167 s)	1	1747.6	29.1	0.5	0.0
			8	728.2	12.1	0.2	0.0
			16	436.9	7.3	0.1	0.0
		50 Hz (0.0200 s)	1	1498.0	25.0	0.4	0.0
			8	624.1	10.4	0.2	0.0
			16	374.5	6.2	0.1	0.0
	1		1	104857.0	1747.6	29.1	1.2
			8	43690.0	728.2	12.1	0.5
			16	26214.0	436.9	7.3	0.3
	30		1	3145710.0	52428.5	873.8	36.4
			8	1310700.0	21845.0	364.1	15.2
			16	786420.0	13107.0	218.5	9.1
	60		1	6291420.0	104857.0	1747.6	72.8
			8	2621400.0	43690.0	728.2	30.3
			16	1572840.0	26214.0	436.9	18.2
	900		1	94371300.0	1572855.0	26214.3	1092.3
			8	39321000.0	655350.0	10922.5	455.1
			16	23592600.0	393210.0	6553.5	273.1
	1800		1	188742600.0	3145710.0	52428.5	2184.5
			8	78642000.0	1310700.0	21845.0	910.2
			16	47185200.0	786420.0	13107.0	546.1
	3600		1	377485200.0	6291420.0	104857.0	4369.0
			8	157284000.0	2621400.0	43690.0	1820.4
			16	94370400.0	1572840.0	26214.0	1092.3

If data is not available for the entire duration of pre-trigger, the trigger position will be based on available pre-trigger.

The Data Logger setting configuration can be made at the ***SETPOINTS\DEVICE\DATA LOGGER*** path, accessing directly through the IEDs front panel, or through the EnerVista Configuration software ***Setting*** tab.

The Data Logger files can be visualized using the EnerVista Configuration software by double clicking on the ***DataLogger*** file available at the ***Browse Data*** sub tab under the ***Records*** tab. The Data Logger file, in Comtrade format (*.cfg, *.dat, no header provided), can be exported and saved in a computer. A summary of the data contained in the file is also provided and can be accessed by double clicking on the ***View Summary*** icon.

Basic Data Logger information, such as: newest sample time and oldest sample time can be accessed through the IEDs front panel at ***RECORDS\DATA LOGGER***. The recommended way of accessing to the Disturbance Recorder data is using the EnerVista Configuration software.

The Data Logger files can be deleted using the ***Clear Data Logger*** command accessible through the ***Commands*** window on the ***Monitor*** tab on EnerVista Configuration software. The files can also be deleted using the ***Clear All Records*** command (this command will clear all the records in the device, not just the Data Logger ones). The Clear Records commands are also available at the ***SETPOINT\DEVICE\CLEAR RECORDS*** path, directly through the IEDs front panel, or through the EnerVista Configuration software ***Setting*** tab.

15.5 FAULT RECORDS

Some models provide fault location functionality. It is possible to identify the fault location by measuring the fault voltage and current magnitude and phases and presenting this information to a Fault Locator function. The fault locator is triggered whenever a fault record is generated, and the subsequent fault location data is included as part of the fault record. This information is also displayed in the ***Fault Records*** sub menu in the *RECORDS* menu. This setting will display the fault location in kilometres or miles, depending on the chosen units in the ***Units of Length*** setting.

The Fault Locator uses pre-fault and post-fault analogue input signals to calculate the fault location. The result is included in the fault record along with the pre-fault and post-fault voltages.

The ***Fault Records*** setting configuration can be made at the ***SETPOINTS\DEVICE\FAULT RECORDS*** path, accessing directly through the IEDs front panel, or through the EnerVista Configuration software ***Setting*** tab.

The Fault Report files can be visualized using the EnerVista Configuration software by double clicking on the ***FaultReport-(n)*** file available at the ***Browse Data*** sub tab under the ***Records*** tab, where (n) is the number of the fault report. The file fault report file is a text file with a (*.flt) extension, that can be exported and saved in a computer. This file contains some data related to the IED and some of the Fault Records settings, the postfault phasor values, prefault and fault data from the programmed analogue channels, along with the fault location details: type of fault and distance to fault.

Basic Fault Records information, such as: number of reports, last trip time, last clear time, type of fault and distance to fault and the date and time of the record, can be accessed through the IEDs front panel at ***RECORDS\FAULT RECORDS.*** Analogue prefault, fault and postfault data for each fault record can be accessed via the EnerVista Configuration software.

The fault report files can be deleted using the ***Clear Fault Reports*** command accessible through the ***Commands*** window on the ***Monitor*** tab on the EnerVista Configuration software. The files can also be deleted using the ***Clear All Records*** command (this command will clear all the records in the device, not just the fault reports ones). The Clear Records commands are also available at the ***SETPOINT\DEVICE\CLEAR RECORDS*** path, directly through the IEDs front panel, or through the EnerVista Configuration software ***Setting*** tab.

Note:
Fault Report (Fault Locator) only available for products with CT & VT inputs (in model P14D only).

15.5.1 FAULT LOCATOR SETTINGS EXAMPLE

Assuming the following data for the protected line:

Parameter	Value
CT ratio	1200/5
VT ratio	230000/115
Line length	10 km
Positive sequence line impedance ZL1 (per km|)	0.089+j0.476 Ohms/km
Zero sequence line impedance ZL0	0.34+j1.03 ohms/km
Zero sequence mutual impedance ZM0	0.1068+j0.5712 Ohms/km

The line impedance magnitude and angle settings are calculated as follows:

- Ratio of secondary to primary impedance = CT ratio/VT ratio = 0.12
- Positive sequence line impedance ZL1 (total) = 0.12 x 10(0.484∠79.4°) = 0.58 ∠79.4°
- Therefore set line length = 0.58
- Line angle = 79°

The residual impedance compensation magnitude and angle are calculated using the following formula:

$$KZn = \frac{ZL0 - ZL1}{3ZL1} = \frac{(0.34 + j1.03) - (0.089 + j0.476)}{3(0.484\angle 79.4°)} = \frac{0.6\angle 65.2°}{1.45\angle 79.4°} = 0.41\angle -14.2°$$

Therefore the settings are:

- KZN Residual = 0.41
- KZN Res Angle = -14

15.6 EVENT DATA

The ***Event Data*** feature stores 64 FlexAnalog quantities each time an event occurs. The IED is able to capture a maximum of 2048 event records. The ***Event Data*** behaviour matches that of the Event Recorder. This is a Platform feature and a Basic option, so it has no dependencies.

There is no Enabling/Disabling of the feature. It is always ON.

The Event Data setting configuration can be made at the ***SETPOINTS\DEVICE\EVENT DATA*** path, accessing directly through the IEDs front panel, or through the EnerVista Configuration software ***Setting*** tab.

64 analogue parameters can be configured in the Event Data and its values will be recorded per event at the time of its occurrence.

Event Data values can be visualized if using the EnerVista Configuration software by clicking on each event contained in the ***Evt*** file available at the ***Browse Data*** sub tab under the ***Records*** tab. The Event Data information for each event will be shown (Parameter and Value) under ***Event Info*** in the right pane. The event file (*.evt), containing the event data, can be exported and saved on a computer.

The Event Data recorder for each event can be also accessed through the IEDs front panel by pressing the ENTER key at ***RECORDS\EVENTS***. Several screens will be accessible per event, containing the 64 analogue configurable parameters. The ones configured will show the name of the analogue signal and its value, the ones not configured will show OFF. To go to of the Event Data visualisation, press the Cancel key.

The Event Data will be cleared when the events are deleted.

15.7 FLEX STATES

The Flex State feature provides a mechanism where any of 256 selected states or any inputs can be used for efficient monitoring.

The Flex States setting configuration can be made at the ***SETPOINTS\DEVICE\FLEX STATES*** path, accessing directly through the IEDs front panel, or through the EnerVista Configuration software ***Setting*** tab.

256 digital parameters (FlexLogic operands) can be configured in the Flex States feature.

Flex States values can be visualized (Parameter (n) and Value (On, Off)) in the ***Flex State*** menu available at the ***Device Status*** sub tab under the ***Monitoring*** tab if using the EnerVista Configuration software.

The Flex States values can be also accessed through the IEDs front panel at ***DEVICE STATUS\FLEX ELEMENTS*** path.

15.8 FLEX ELEMENTS

There are 8 identical Flex Element that can be configured under the ***SETPOINTS\FLEXLOGIC\FLEXELEMENTS*** path. A Flex Element is a universal comparator, that can be used to monitor any analogue actual value measured or calculated by the IED, or a net difference of any two analogue actual values of the same type. Depending on how the Flex Element is programmed, the effective operating signal could be either a signed signal (“Signed” selected for Input Mode), or an absolute value (“Absolute” selected for Input Mode).

The element can be programmed to respond either to a signal level or to a rate-of-change (delta) over a pre-defined period of time. The output signal is asserted when the operating signal is higher than a threshold or lower than a threshold as per user’s choice.

When programming a Flex Element, one shall keep in mind the following limitations:

1. The analogue inputs for any Flex Element shall be from the same “gender”:

- current and current (in any combination, phase-symmetrical, phase-phase, kA-A, differential, restraint, etc.)
- voltage and voltage (as above)
- active power and active power (Watts and Watts)
- reactive power and reactive power (Vars and Vars)
- apparent power and apparent power (VA and VA)
- angle and angle (any, no matter what signal, for example angle of voltage and angle of current are a valid pair)
- % and % (any, for example THD and harmonic content is a valid pair)
- V/Hz and V/Hz
- Flex Element actual and Flex Element actual

For all the other combinations, the element will display 0.000 or N/A and will not assert any output signal. The IED displays an error message.

2. The analogue value associated with one Flex Element can be used as an input to another Flex Element “Cascading”.

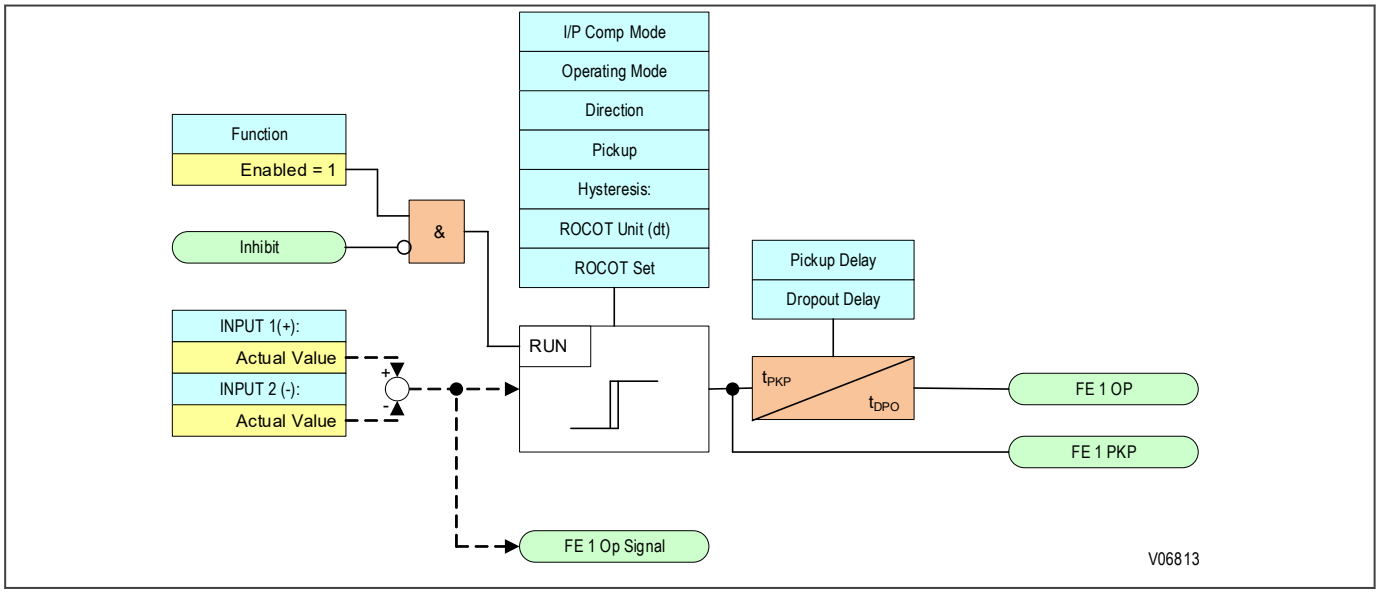

Figure 109: Flex element logic diagram

Input 1 (+) setting specifies the first input (non-inverted) to the Flex Element. Zero is assumed as the input if this setting is set to Off. For proper operation of the element at least one input must be selected. Otherwise, the element will not assert its output signal. ***Input 2 (-)*** setting specifies the second input (inverted) to the Flex Element. Zero is

assumed as the input if this setting is set to Off. For proper operation of the element at least one input must be selected, otherwise, the element will not assert its output signal. This input should be used to invert the signal if needed for convenience, or to make the element respond to a differential signal. A warning message is displayed, and the element does not operate if the two input signals are of different types, for example if one tries to use active power and phase angle to build the effective operating signal.

The element responds directly to the differential signal if this ***Operating Mode*** setting is set to Signed. The element responds to the absolute value of the differential signal if this ***Operating Mode*** setting is set to Absolute. Sample applications for the Absolute selection include monitoring the angular difference between two phasors with a symmetrical limit angle in both directions; monitoring power regardless of its direction or monitoring a trend regardless of whether the signal increases of decreases.

Pickup setting specifies the operating threshold for the effective operating signal of the element. If the Over direction is set in the ***Oper Signal Dir.*** setting, the element picks up when the operating signal exceeds the `PICKUP` value. If the Under direction is set, the element picks up when the operating signal falls below the value set in the ***Pickup*** setting. The ***Hysteresis*** setting controls the element drop out. Note that both the operating signal and the pickup threshold can be negative when facilitating applications such as reverse power alarms.

The Flex Element can be programmed to work with all analogue values measured or computed by the IED. The ***Pickup*** setting is entered in pu values using the following definitions of the base units:

Definitions of the Base Unit for the Flex Element

Measured or Calculated Analogue Value Related to:	Base Unit
Voltage	VBASE = maximum nominal primary RMS value of the Input 1 (+) and Input 2 (-) inputs
Current	IBASE = maximum nominal primary RMS value of the Input 1 (+) and Input 2 (-) inputs
Power	PBASE = maximum value of VBASE * IBASE for the Input 1 (+) and Input 2 (-) inputs
Power factor	PFBASE = 1.00
Phase angle	DegBASE = 360 deg
Harmonic content	HBASE = 100% of nominal
THD	THDBASE = 100%
Frequency	fBASE = nominal frequency as entered under the SYSTEM SETUP menu
Volt/Hz	BASE = 1.00
I2t (arcing amps)	BASE = 2000 kA2*cycle

ROCOT Unit (dt) setting specifies the time base dt when programming the FlexElement as a rate of change element.

ROCOT Set setting specifies the duration of the time interval for the rate of change mode of operation.

Note:
*The **ROCOT Unit (dt)** and **ROCOT Set** settings are applicable only if the **I/P Comp Mode** is set to Delta.*

15.9 MEASUREMENTS

15.9.1 MEASURED QUANTITIES

The device measures directly and calculates a number of system quantities, which are updated every second. You can view these values in the relevant *MEASUREMENT* window or with the Measurement Viewer in the settings software. Depending on the model, the device may measure and display some or more of the following quantities:

- Measured and calculated analogue current and voltage values
- Power and energy quantities
- Peak, fixed and rolling demand values
- Frequency measurements
- Thermal measurements

15.9.1.1 MEASURED AND CALCULATED CURRENTS

The device measures phase-to-phase and phase-to-neutral current values. The values are produced by sampling the analogue input quantities, converting them to digital quantities to present the magnitude and phase values. Sequence quantities are produced by processing the measured values. These are also displayed as magnitude and phase angle values.

These measurements are contained in the *MEASUREMENTS* window in the *CT1 BANK-B* tab.

15.9.1.2 MEASURED AND CALCULATED VOLTAGES

The device measures phase-to-phase and phase-to-neutral voltage values. The values are produced by sampling the analogue input quantities, converting them to digital quantities to present the magnitude and phase values. Sequence quantities are produced by processing the measured values. These are also displayed as magnitude and phase angle values.

These measurements are contained in the *MEASUREMENTS* window in the *PH VT1 BANK-A* or *4TH VT1 BANK-A* tabs.

15.9.1.3 POWER AND ENERGY QUANTITIES

Using the measured voltages and currents the device calculates the apparent, real and reactive power quantities. These are produced on a phase by phase basis together with three-phase values based on the sum of the three individual phase values. The device also calculates the per-phase and three-phase power factors.

15.9.1.4 DEMAND VALUES

The device produces fixed, rolling, and peak demand values. You reset these quantities using the ***Reset demand*** command.

The fixed demand value is the average value of a quantity over the specified interval. Values are produced for three phase currents and three phase real and reactive power. The fixed demand values displayed are those for the previous interval. The values are updated at the end of the fixed demand period according to the ***Fix Dem Period*** setting.

The rolling demand values are similar to the fixed demand values, but a sliding window is used. The rolling demand window consists of a number of smaller sub-periods. The resolution of the sliding window is the sub-period length, with the displayed values being updated at the end of each of the sub-periods according to the ***Roll Sub Period*** setting.

Peak demand values are produced for each phase current and the real and reactive power quantities. These display the maximum value of the measured quantity since the last reset of the demand values.

15.9.1.5 FREQUENCY MEASUREMENTS

The device produces a range of frequency statistics and measurements relating to the Frequency Protection function. These include Check synchronisation, Slip frequency and Rate of Change of Frequency measurements.

The device produces the slip frequency measurement by measuring the rate of change of phase angle between the bus and line voltages, over a one-cycle period. The slip frequency measurement assumes the bus voltage to be the reference phasor.

15.9.1.6 OTHER MEASUREMENTS

Depending on the model, the device produces a range of other measurements such as thermal measurements.

15.9.2 OPTO-INPUT TIME STAMPING

Each opto-input sample is time stamped within a tolerance of +/- 1 ms with respect to the Real Time Clock. These time stamps are used for the opto event logs and for the disturbance recording. The device needs to be synchronised accurately to an external clock source such as an IRIG-B signal or a master clock signal provided in the relevant data protocol.

For both the filtered and unfiltered opto-inputs, the time stamp of an opto-input change event is the sampling time at which the change of state occurred. If multiple opto-inputs change state at the same sampling interval, these state changes are reported as a single event.

15.10 POWER FACTOR

It is generally desirable for a system operator to maintain the Power Factor as close to unity as possible, to minimize both costs and voltage excursions. Since the Power Factor is variable on common non-dedicated circuits, it is advantageous to compensate for low (lagging) Power Factor values by connecting a capacitor bank to the circuit when required.

15.10.1 POWER FACTOR IMPLEMENTATION

Four independent elements are available for monitoring Power Factor. Each having a Switch-In and a Switch-Out level. The relay allows two stages of capacitance switching for Power Factor compensation. It calculates the average Power Factor in the three phases as follows:

$$t_{op} = TD\left(\frac{\beta}{M^{\alpha}-1}+L\right)+C$$

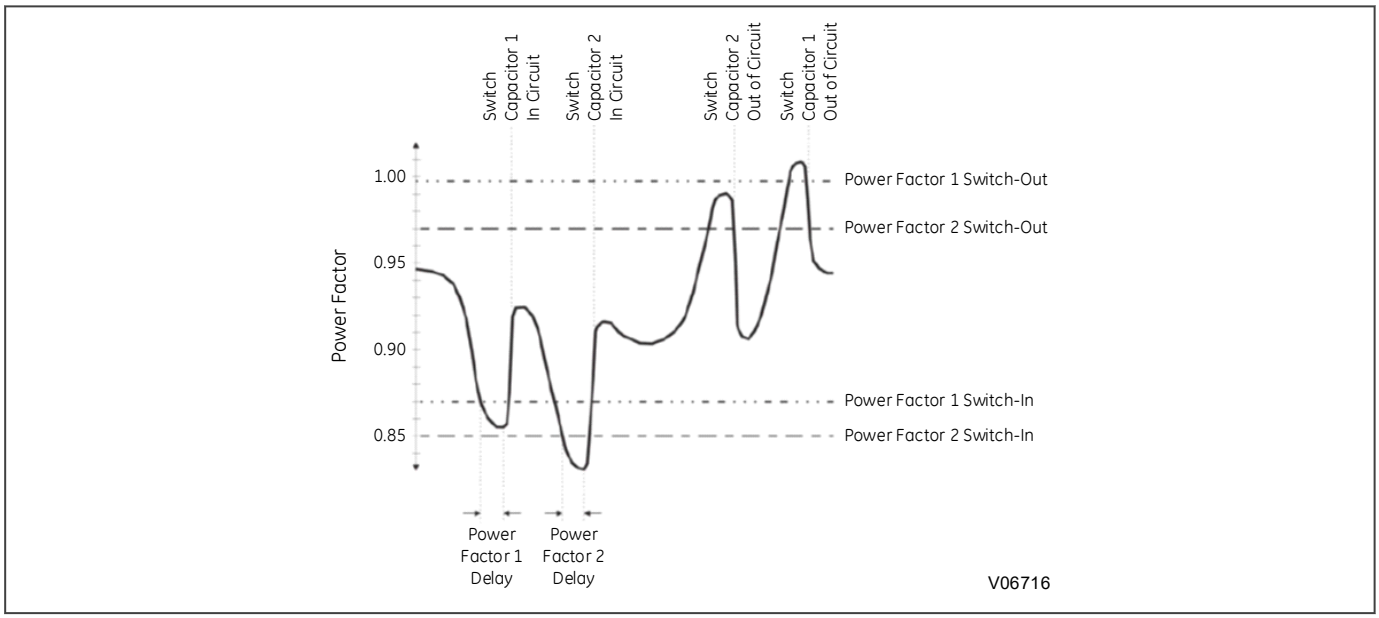

Figure 110: Capacitor bank switching

The setting of this function produces Switch-In, Switch-Out and Operate flags. The Power Factor Switch-In flag is asserted when the absolute value of the calculated Power Factor is below the `Switch-In` value, and current and voltage supervision conditions are satisfied. The Power Factor Operate flag in the Switch-In level is asserted if the element stays switched in for the time defined by the **Time Delay**. After the element drops from Switch-In, the Power Factor Switch-Out flag is asserted when the Power Factor passes the `Switch-Out` value. The Power Factor Operate flag in the Switch-Out level is asserted if the element stays switched out for the time defined by the **Time Delay**.

The minimum operating voltage ***Vmin*** is set as a threshold below which the element is reset.

The following figure illustrates the conventions established for use in the relay, where the negative value means the lead power factor, and the positive value means the lag power factor.

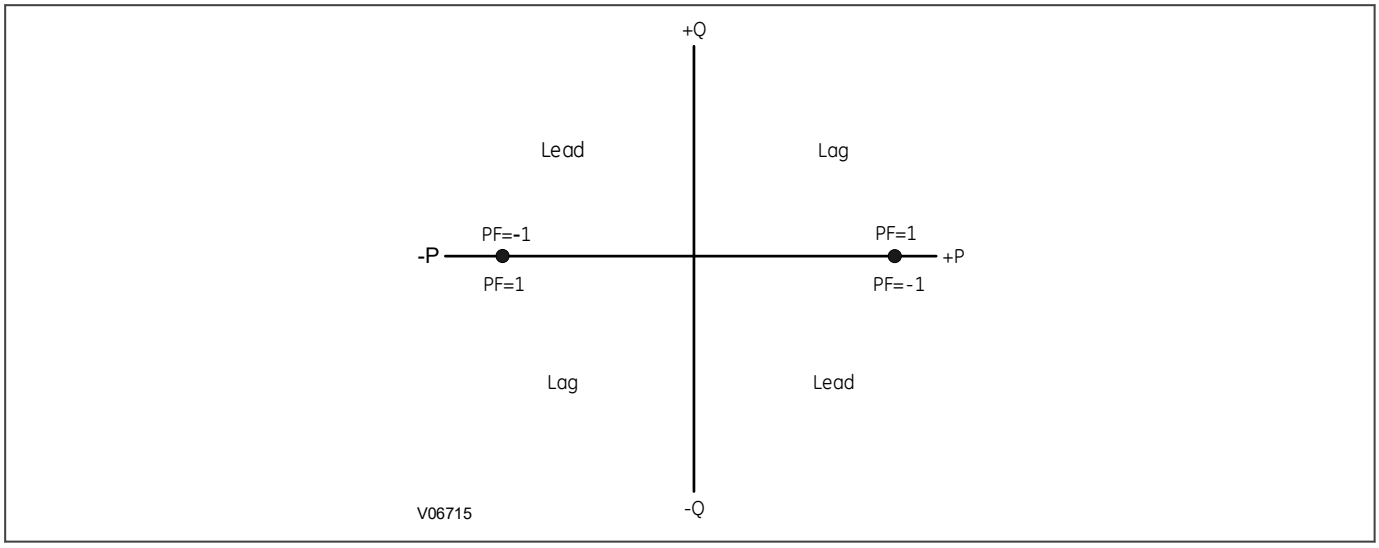

Figure 111: Conventions for power factor

15.10.2 POWER FACTOR LOGIC

For each element, when the measured Power Factor becomes more lagging or leading (depending on the user setting) than the ***Switch-In*** level, the relay operates a user-selected output contact. This output can be used to control a switching device which connects capacitance to the circuit, or to signal an alarm to the system operator. After entering this state, when the Power Factor becomes less lagging or leading than the power factor ***Switch-Out*** level for a time greater than the set ***Time Delay***, the relay will reset the output contact to the non-operated state.

For Delta-connected VTs, the Power Factor feature is inhibited from operating unless all three voltages are above a threshold `Vmin` and one or more currents are above 0.002 x CT. Power Factor element delay timers will only be allowed to time when the voltage threshold is exceeded on all phases and the Power Factor remains outside of the region between the programmed ***Switch-In*** and ***Switch-Out*** levels. In the same way, when a Power Factor condition starts the delay timer programmed as ***Time Delay***, if all three phase voltages fall below the threshold before the timer has timed-out, the element will reset without operating. A loss of voltage during any state will return Power Factor elements to the Reset state.

For wye-connected VTs, the power factor value is calculated from the valid phase(s) which voltage is above a user selected threshold and current is above 0.002 x CT. Power Factor element delay timers will only be allowed to time when the supervision conditions are met, and the Power Factor remains outside of the region between the programmed ***Switch-In*** and ***Switch-Out*** levels. In the same way, when a Power Factor condition starts the delay timer, if one or more valid phases no longer satisfy the supervision conditions, the power factor will be re-calculated based on the still valid phase(s). If the element is continuously asserted with the new power factor value, the timer would continue timing, otherwise, the element will reset without operating.

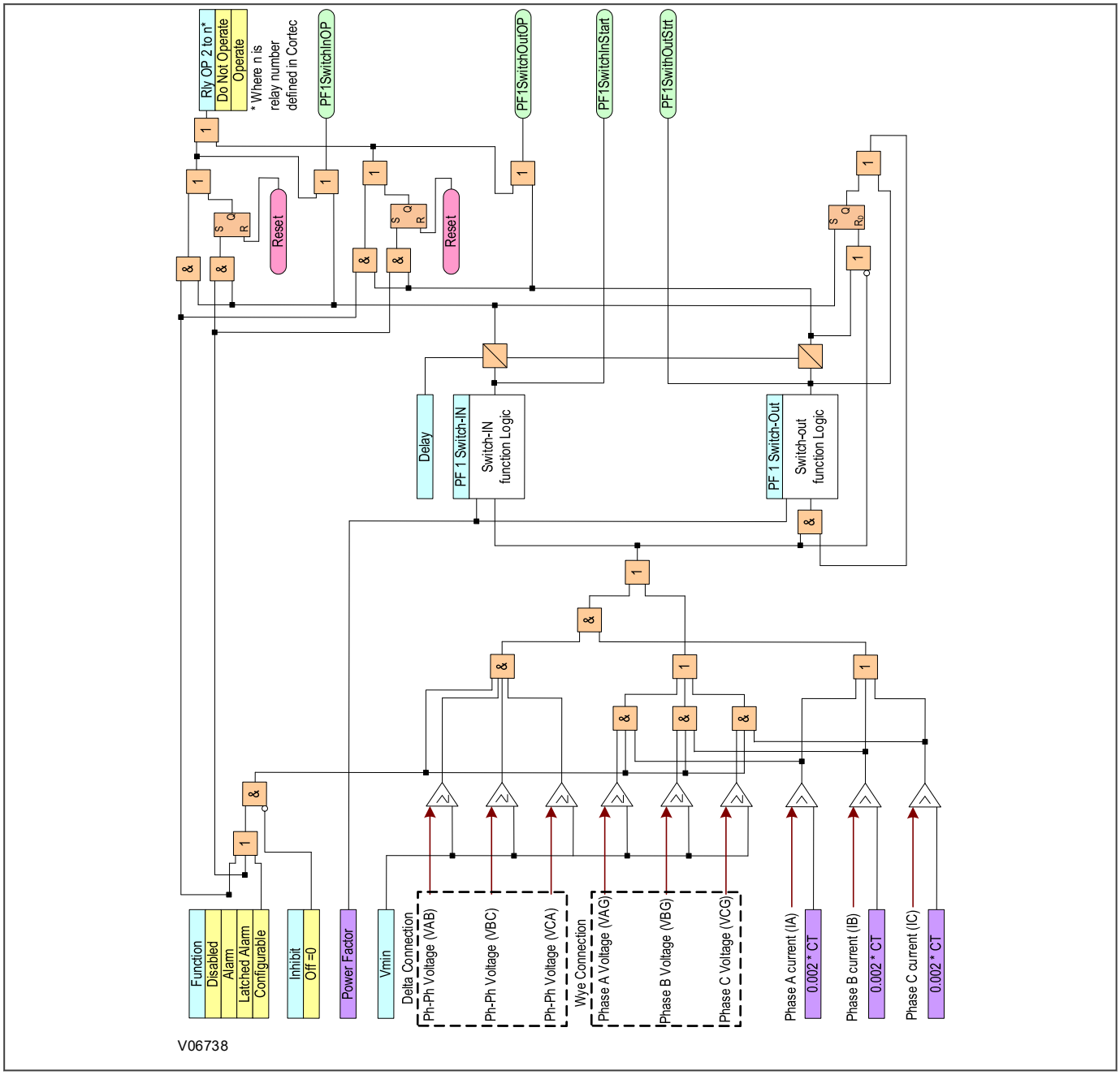

Figure 112: Power factor logic

15.10.3 POWER FACTOR LOGIC SETTING GUIDELINES

The settings ***Switch-In*** and ***Switch-Out*** can be set as negative value that denotes the lead power factor, and the positive value for the lag power factor. It should be noted that ***Switch-In*** and ***Switch-Out*** are mutually exclusive, as shown in the following application examples where there is no common zone in which both ***Switch-In*** and ***Switch-Out*** are asserted.

For example, the applications of ***Switch-In*** and ***Switch-Out*** levels are shown in the figures below:

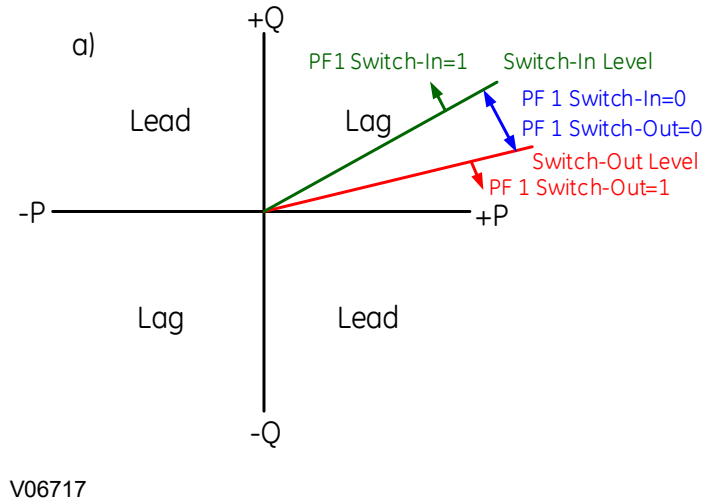
a)
+Q
PF1 Switch-In=1
Switch-In Level
PF 1 Switch-In=0
PF 1 Switch-Out=0
Lead
Lag
Switch-Out Level
PF 1 Switch-Out=1
-P
+P
Lag
Lead
-Q
V06717

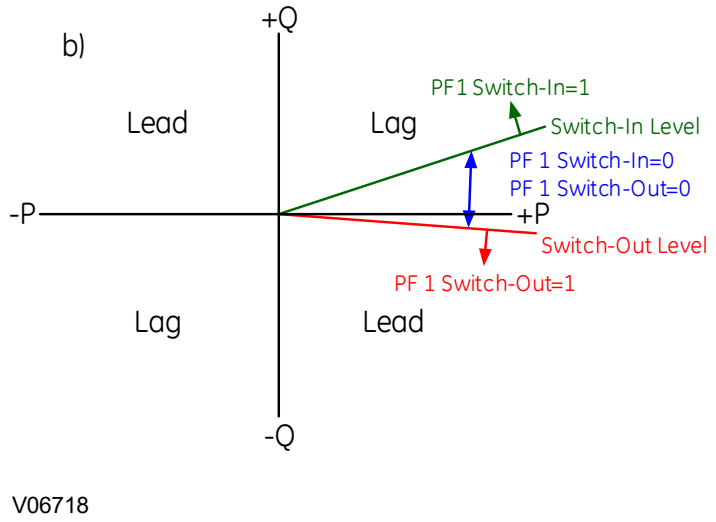
b)
+Q
PF1 Switch-In=1
Lead
Lag
Switch-In Level
PF 1 Switch-In=0
PF 1 Switch-Out=0
-P
+P
Switch-Out Level
PF 1 Switch-Out=1
Lag
Lead
-Q
V06718

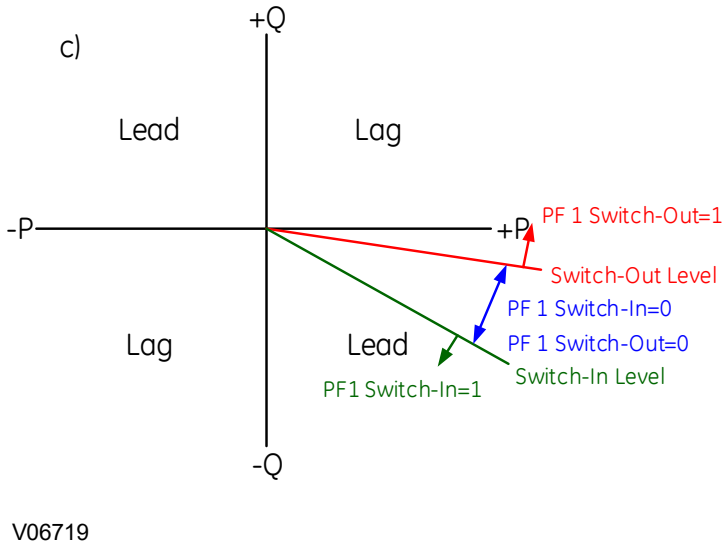
c)
+Q
Lead
Lag
-P
+P
PF 1 Switch-Out=1
Switch-Out Level
PF 1 Switch-In=0
PF 1 Switch-Out=0
Lag
Lead
Switch-In Level
PF1 Switch-In=1
-Q
V06719

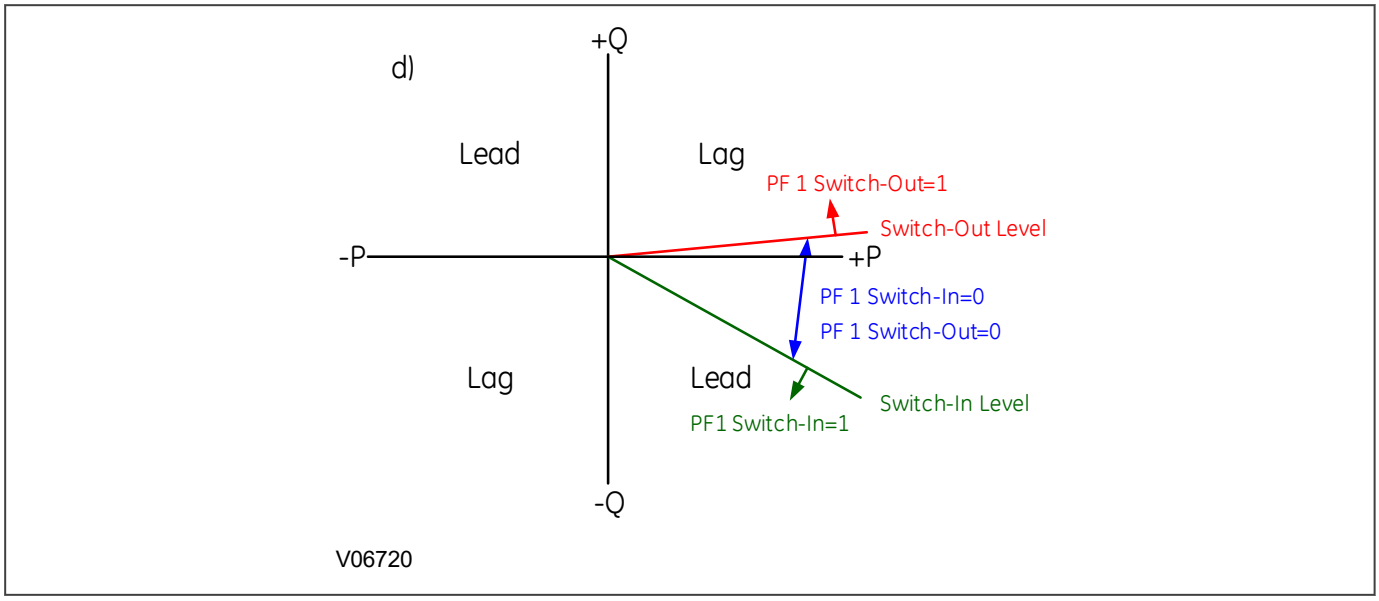

Figure 113: Application examples of power factor element

15.11 BREAKER ARCING CURRENT

It is generally desirable for a system operator to maintain the Power Factor as close to unity as possible, to minimize both costs and voltage excursions. Since the Power Factor is variable on common non-dedicated circuits, it is advantageous to compensate for low (lagging) Power Factor values by connecting a capacitor bank to the circuit when required.

15.11.1 BREAKER ARCING CURRENT IMPLEMENTATION

Breaker Arcing current is implemented under the path **SETPOINT\MONITROING\CIRCUIT BREAKER\CB 1 MONITOR**. The device provides one Breaker Arcing current element.

This Breaker Arcing current element calculates an estimate of the per-phase wear on the breaker contacts by measuring and integrating the current squared passing through the breaker contacts as an arc. These per-phase values are added to accumulated totals for each phase and are compared to a programmed threshold value as a setting in setpoint ***Alarm Value***. When the threshold is exceeded in any phase, the relay can set an output operand, operate an output relay based on the setting and set an alarm. The accumulated value for each phase is; ***Arc current Phase A, Arc current Phase B, Arc current Phase C & ∑ Arcing Current*** are displayed as an actual value in ***Records***.

The values can be cleared by navigating to ***Records/Clear Records*** menu, and either executing an individual command to clear the accumulated “BKR (x) Arcing Current” values only, or executing the command to clear “All Records”. The data will be cleared by changing a command setting to “YES” and pressing the ENTER key. After clearing the data, the command setting automatically reverts to “NO”.

15.11.2 BREAKER ARCING CURRENT LOGIC

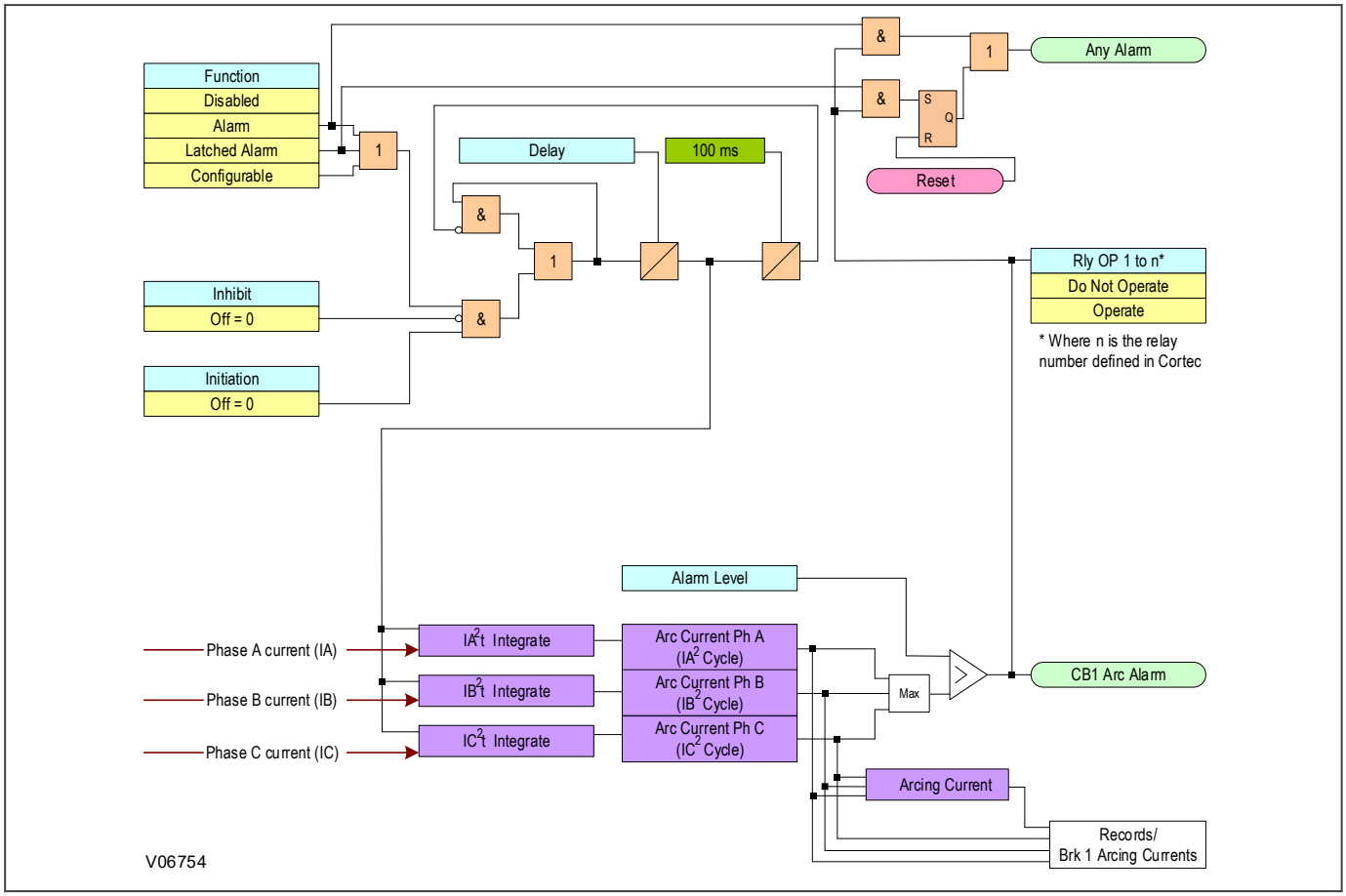

Figure 114: Breaker arcing current logic

15.11.3 BREAKER ARCING CURRENT APPLICATION NOTES

The same output operands that are selected to operate the Trip output relay, and are used to trip the breaker indicating a tripping sequence has begun, are used to initiate this feature. The inputs/operands are selected in setpoint ***Initiation*** and initiates the Breaker Arcing Current scheme.

The Setpoint ***Delay*** is the time delay introduced between initiation and starting of the integration, to prevent integration of current flow through the breaker before the contacts have parted. This interval includes the operating time of the output relay, and any other auxiliary relays and the breaker mechanism. For maximum measurement accuracy, the interval between the change-of-state of the operand (from 0 to 1) and contact separation should be measured for the specific installation.

Integration of the measured current continues for 100 ms, which is expected to include the total arcing period.

The setpoint ***Alarm Value*** specifies the threshold value (kA2-cycle) above which the output operand is set.

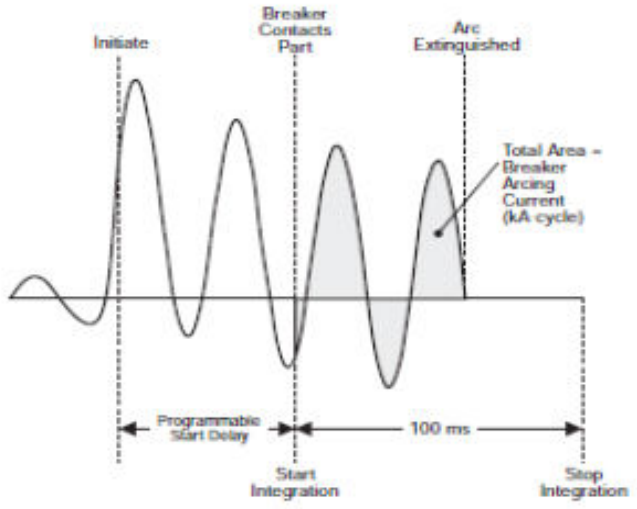

Figure 115: The breaker arcing current measurement

15.12 VOLTAGE DISTURBANCE

15.12.1 VOLTAGE SAG (DIP)

As per IEEE 1159-2009: IEEE Recommended Practice for Monitoring Electric Power Quality, Voltage sag is a fall in the RMS voltage between 0.1 pu and 0.9 pu for durations from 0.5 cycles to 1 min. The condition ends when the level increases to at least 10% of the nominal voltage above the SAG LEVEL setting. When the voltage on any phase drops below this level, a Sag condition occurs. Voltage sags are usually associated with system faults but can also be caused by switching heavy loads or starting large motors. Short duration sag may cause process disruptions.

15.12.2 VOLTAGE SWELL

As per IEEE 1159-2009, voltage swell is an increase in the RMS voltage above 1.1 pu for durations from 0.5 cycle to 1 min. To end a Swell condition the level must decrease to 10% of the nominal voltage bellow the ***SWELL LEVEL*** setting. Voltage swells are usually associated with system fault conditions, but they are much less common than voltage sags. An SLG fault on the system can cause a swell to occur, resulting in a temporary voltage rise on the healthy phases. Swells can also be caused by switching off a large load, load shedding, or switching on a large capacitor bank. Voltage swell may cause failure of the components depending upon the magnitude and frequency of occurrence.

Below is a reference table representing the different categories of Voltage Sag/Swell conditions based on duration and pickup level.

Short Duration Root-Mean-Square (rms)	Duration	Level
Instantaneous		
Sag	0.5 - 30 cycles	0.1 - 0.9 pu
Swell	0.5 - 30 cycles	1.1 - 1.8 pu
Momentary		
Sag	30 cycles - 3 s	0.1 - 0.9 pu
Swell	30 cycles - 3 s	1.1 - 1.4 pu
Interruption	0.5 cycles - 3 s	< 0.1 pu
Temporary		
Sag	> 3s - 1 min	0.1 - 0.9 pu
Swell	> 3s - 1 min	1.1 - 1.2 pu
Interruption	> 3s - 1 min	< 0.1 pu

15.12.3 VOLTAGE DISTURBANCE IMPLEMENTATION

The relay provides four power quality voltage disturbance elements for the monitoring of Voltage Sag and Voltage Swell.

Voltage Swell operates after a settable ***Volt Swell Delay***, as soon as any of the three voltage phases exceeds the set voltage level, programmed as ***Volt Swell Set***.

Voltage Sag operates after a settable ***Volt Sag Delay***, when any of the three voltage phases is greater than the set minimum voltage using setting ***Vmin*** level, and the voltage drops below the set ***Volt Sag Set***.

If the ***Phase VT Input*** is selected as "Star", then the ***Mode*** setting further defines the operating quantity and per-unit value for this element. If the voltage measuring mode is set as Phase to Phase, then the operating quantity for this element will be phase-to-phase. Likewise, if the voltage measuring mode is set to Phase to Ground, then the operating quantity for this element will be the phase-to-ground. If the ***Phase VT Input*** is selected as "Delta", then the phase-to-phase voltage is used, regardless of the ***Mode*** selection.

To avoid an undesired continuous alarm, in case the upstream power source is turned off, Volt Sag operation alarm is limited to the time duration of length ***Volt Sag tReset***. After this alarm reset time, the sag operation alarm is reset until the next sag event.

15.12.4 VOLTAGE DISTURBANCE LOGIC

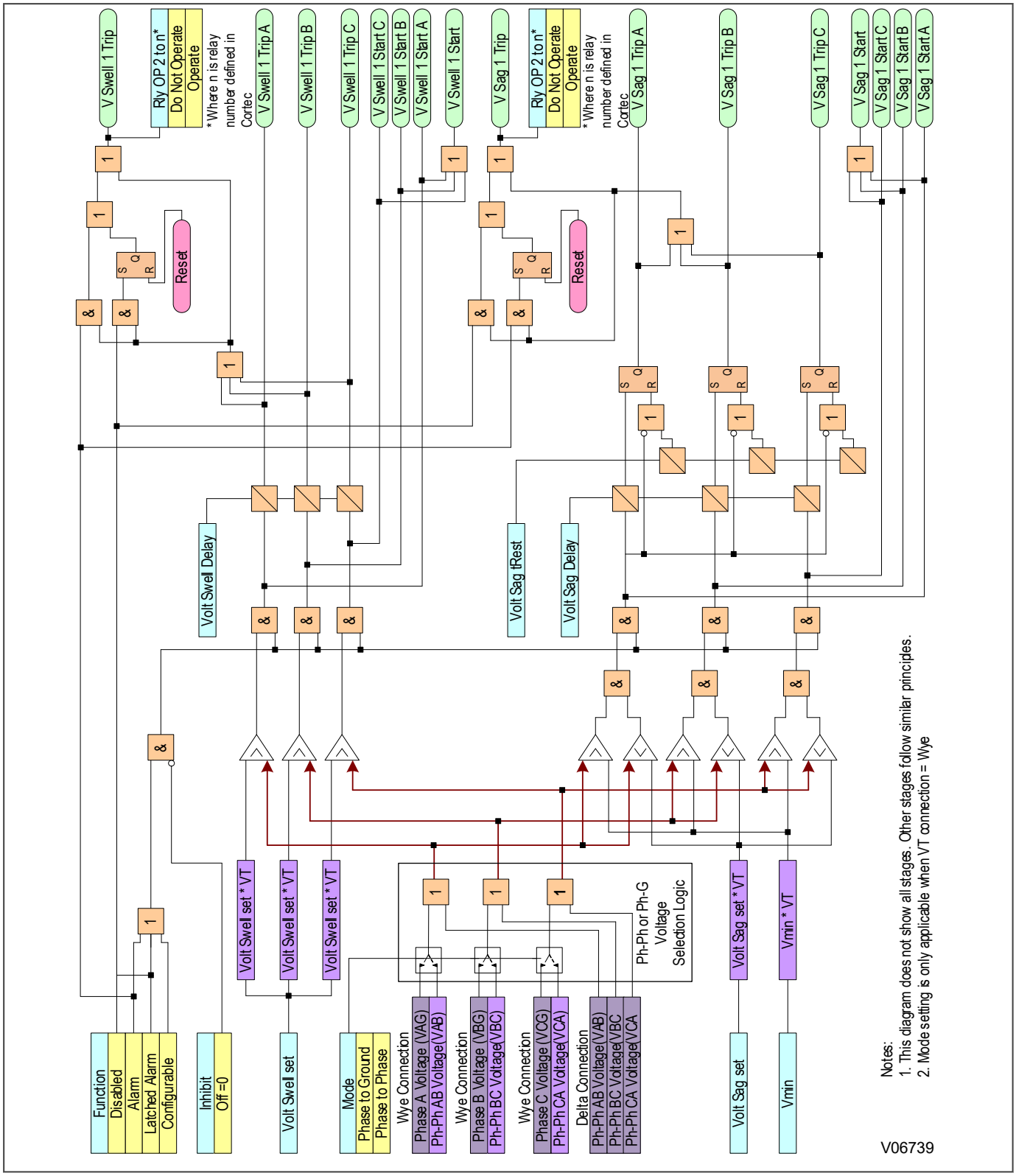

Figure 116: Voltage disturbance logic

15.12.5 VOLTAGE DISTURBANCE IMPLEMENTATION SETTING GUIDELINES

Volt Swell Set setting defines the voltage swell pickup level for phase (A, B, C), and is usually set to level 1.1 to 1.8 times the VT/nominal voltage.

Vmin setting defines the minimum feeder voltage level required to identify the voltage sag condition. This will help to discriminate the voltage sag condition from the feeder down condition.

Volt Sag Set setting defines the voltage sag pickup level, and it is usually set to a level between 0.1 to 0.9 times the VT/nominal voltage.

Volt Swell Delay and ***Volt Sag Delay*** settings specify the operation time delay for the voltage swell and swag functions, respectively. Short duration (less than 1 min) or long duration (more than 1 min) swell/sag conditions can be differentiated by setting this delay appropriately.

Volt Sag tReset setting specifies the duration of the Volt Sag operation alarm. After this alarm reset time, the sag operation alarm is reset until the next sag event. This setting avoids an undesired continuous alarm in case the upstream power source is turned off.

15.13 VOLTAGE INTERRUPTIONS

15.13.1 VOLTAGE INTERRUPTIONS IMPLEMENTATION

The [product] device provides one Voltage Interruption monitoring element under Power Quality.

The setting of this function is applied to the positive sequence voltage. When the measured voltage is below the threshold, the pickup flag is asserted, and when it reaches above the dropout level, the flag is deserted. The element also calculates the number of voltage interruptions and the total time the voltage is interrupted. The device will store the latest data for the number of voltage interruption and total interruption times for any given instance. Whenever the positive sequence voltage goes below the threshold, the values of the interruption counter and the total time the counter starts are incremented.

The function displays the number of voltage interruptions and the total time the voltage is interrupted for the selected period. The periods can be selected as 8 hours, 1 day, 1 week, 1 month or 1 year.

8 hours:	00:00 - 08:00, 08:00 - 16:00, 16:00 - 24:00
1 day:	0:00 - 24:00
1 week:	Monday 00:00 - Sunday 24:00
1 month:	the first day 00:00 - the last day 24:00
1 year:	1st January 00:00 - 31st December 24:00

15.13.2 VOLTAGE INTERRUPTIONS LOGIC

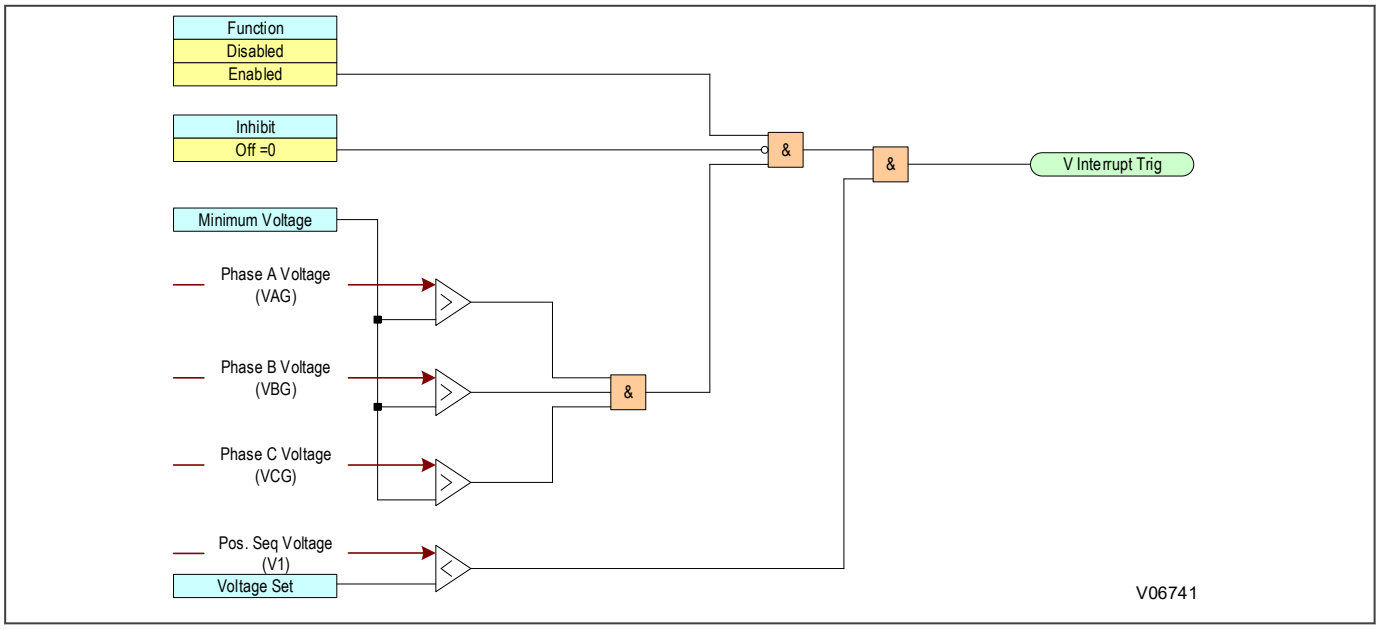

Figure 117: Voltage interruptions logic

Voltage Interruptions recorded values can be found under the path **RECORDS\VOLTINTERRUPTION**

Curr Cml. CNT counter is the cumulative count of voltage interruptions in the current selected period.

Curr Total Time is the total time of voltage interrupted for the current selected period.

Prev Cml. CNT counter is the cumulative count of voltage interruptions in the previous selected period.

Prev Total Time is the total time of voltage interrupted for the previous selected period.

Voltage Interruptions values can be cleared using the ***VoltInterruption*** command accessible under ***SETPOINTS|DEVICE|CLEAR RECORDS*** path, directly through the IEDs front panel or through the EnerVista software, either by assigning 'On', or a FlexLogic operand to the appropriate setting.

Voltage Interruption values can also be cleared by navigating to ***RECORDS\CLEAR RECORDS*** menu in the IEDs front panel, either executing an individual command to clear the accumulated ***VoltInterruption*** values only or executing the command to clear All Records (take into account that the Clear ***All Records*** command will clear all the records in the device, not just the Voltage Interruptions). The data will be cleared by changing a command setting to Yes and pressing the ENTER key. After clearing the data, the command setting automatically reverts to No.

Data can be also cleared through the COMMANDS menu in Enervista by executing the Clear command on the ***VoltInterruption*** selection.

15.13.3 VOLTAGE INTERRUPTION IMPLEMENTATION SETTING GUIDELINES

Voltage Interruptions monitoring is implemented under the path **SETPOINTS\MONITORING\POWER QUALITY \VOLTINTERRUPTION**.

Function setting determines whether the element is Disabled or Enabled.

Multilin Agile has no setting to select the voltage signal input. The signal used for the voltage interruption calculations is always the positive sequence voltage of the Ph VT1 Bank-A.

Voltage Set setting sets the pick-up threshold for the positive sequence under voltage element specified per times VT.

Vmin setting sets the minimum operating voltage for positive sequence under voltage pickup level specified per times VT.

Period setting sets the period of time for which the number of voltage interruptions and total time of voltage interrupted will be displayed.

Inhibit setting allows the user to block the voltage interruption when the selected operand is asserted.

15.14 CB HEALTH MONITORING

The device records various statistics related to the circuit breaker trip operation, allowing an accurate assessment of the circuit breaker condition to be determined. The circuit breaker condition monitoring counters are incremented every time the device issues a trip command.

These statistics are available in the ***RECORDS\CIRCUIT BREAKER*** menu. The menu items are counter values only, and cannot be set directly. The counters may be reset, however, during maintenance. This is achieved with the ***Clear All Records*** command.

Note:
When in Commissioning test mode the CB condition monitoring counters are not updated.

15.14.1 CB HEALTH MONITORING LOGIC

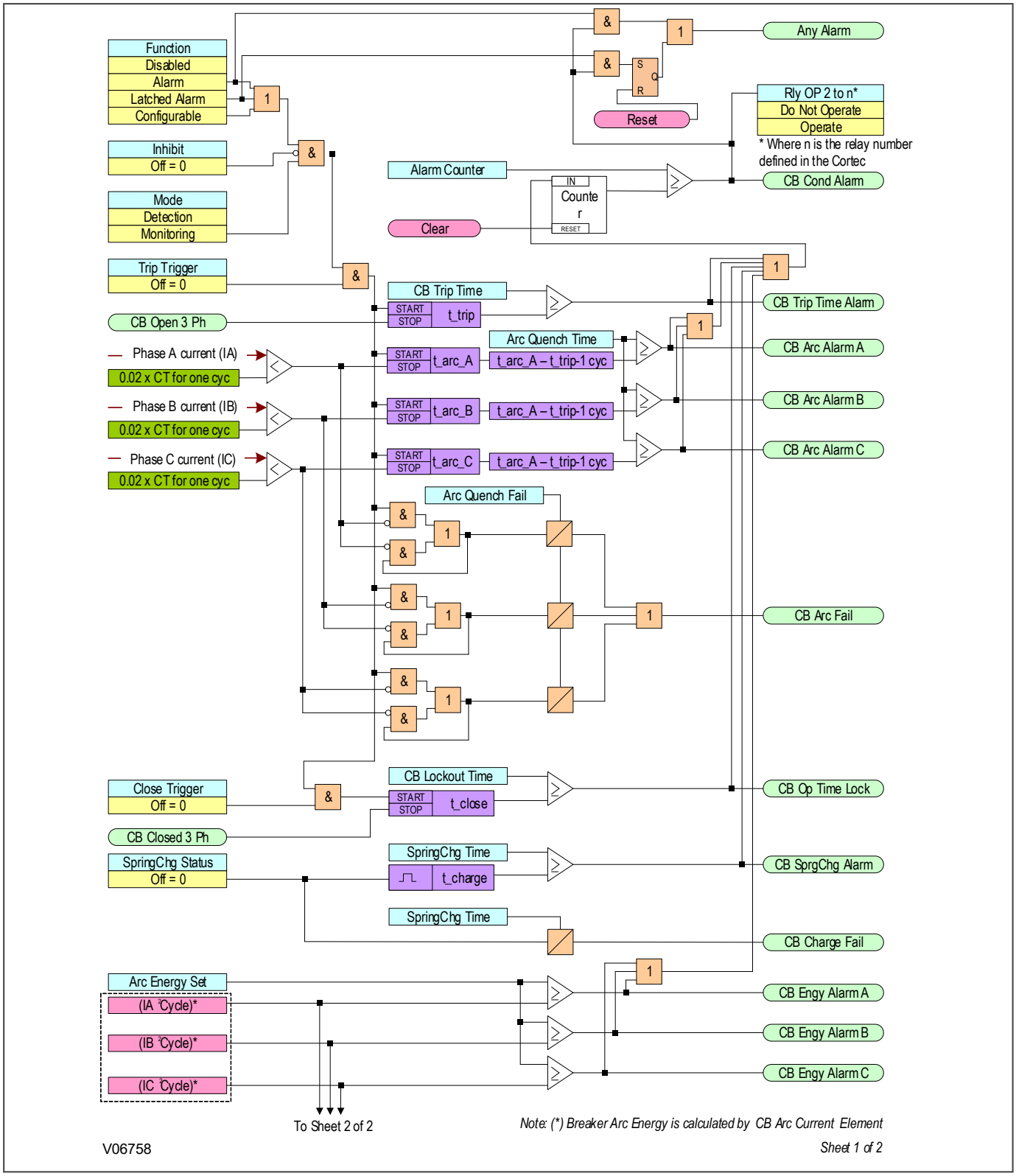

Figure 118: CB health monitoring logic - page 1

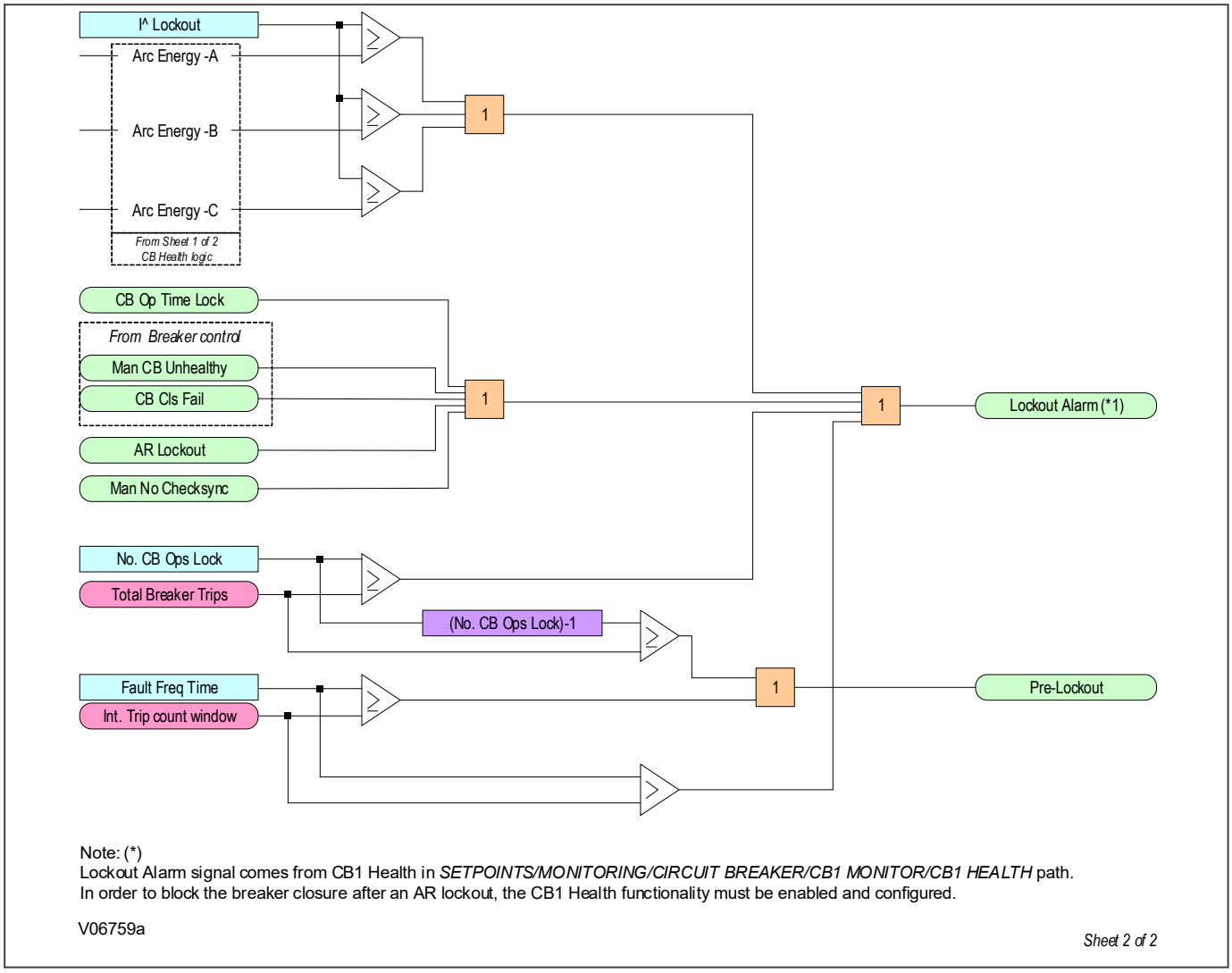

Figure 119: CB health monitoring logic - page 2

15.14.2 APPLICATION NOTES

15.14.2.1 SETTING THE THRESHOLDS FOR THE ARC ENERGY

Where power lines use oil circuit breakers (OCBs), changing of the oil accounts for a significant proportion of the switchgear maintenance costs. Often, oil changes are performed after a fixed number of CB fault operations. However, this may result in premature maintenance where fault currents tend to be low, because oil degradation may be slower than would normally be expected. The Total Current Accumulator (I^ counter) cumulatively stores the total value of the current broken by the circuit breaker providing a more accurate assessment of the circuit breaker condition.

The dielectric withstand of the oil generally decreases as a function of I^2t, where ‘I’ is the broken fault current and ‘t’ is the arcing time within the interrupter tank.

The ARC ENERGY is calculated by the breaker arcing current element. If the breaker arcing current element is disabled, the ARC ENERGY will not be calculated and the ***Arc Energy Set*** setting should not be used. The ARC ENERGY used here is the individual value for each trip rather than the accumulated value recorded in the Breaker Arcing Current element.

Note:
Any maintenance program must be fully compliant with the switchgear manufacturer's instructions.

15.14.2.2 SETTING THE THRESHOLDS FOR THE NUMBER OF OPERATIONS

Every circuit breaker operation results in some degree of wear for its components. Therefore routine maintenance, such as oiling of mechanisms, may be based on the number of operations. Suitable setting of the maintenance threshold will allow an alarm to be raised, indicating when preventative maintenance is due. Should maintenance not be carried out, the device can be set to lockout the autoreclose function on reaching a second operations threshold (***No. CB ops Lock***). This prevents further reclosure when the circuit breaker has not been maintained to the standard demanded by the switchgear manufacturer's maintenance instructions.

The lockout threshold ***No. CB Ops Lock*** may be set to disable autoreclosure when repeated further fault interruptions could not be guaranteed. This minimises the risk of oil fires or explosion.

15.14.2.3 SETTING THE THRESHOLDS FOR THE OPERATING TIME

Slow CB operation indicates the need for mechanism maintenance. Lockout thresholds (***Lockout Time***) is provided to enforce this. They can be set in the range of 0 to 600 ms. This time relates to the interrupting time of the circuit breaker.

15.14.2.4 SETTING THE THRESHOLDS FOR EXCESSSIVE FAULT FREQUENCY

Persistent faults will generally cause autoreclose lockout, with subsequent maintenance attention. Intermittent faults such as clashing vegetation may repeat outside of any reclaim time, and the common cause might never be investigated. For this reason it is possible to set a frequent operations counter, which allows the number of operations ***Fault Freq Count*** over a set time period ***Fault Freq Time*** to be monitored. A separate alarm and lockout threshold can be set.

15.15 CB STATE MONITORING

CB State monitoring is used to verify the open or closed state of a circuit breaker. Most circuit breakers have auxiliary contacts through which they transmit their status (open or closed) to control equipment such as IEDs. These auxiliary contacts are known as:

- 52A for contacts that follow the state of the CB
- 52B for contacts that are in opposition to the state of the CB

This device can be set to monitor both of these types of circuit breaker state indication. If the state is unknown for some reason, an alarm can be raised.

Some CBs provide both sets of contacts. If this is the case, these contacts will normally be in opposite states. Should both sets of contacts be open, this would indicate one of the following conditions:

- Auxiliary contacts/wiring defective
- Circuit Breaker (CB) is defective
- CB is in isolated position

Should both sets of contacts be closed, only one of the following two conditions would apply:

- Auxiliary contacts/wiring defective
- Circuit Breaker (CB) is defective

If any of the above conditions exist, an alarm will be issued. An output contact can be assigned to this function via the Flexlogic Equation Editor. The time delay is set to avoid unwanted operation during normal switching duties.

In the ***SETPOINTS\SYSTEM\CB SETUP\BREAKER*** setpoint there is a setting called ***CB Status Input*** that can be set at one of the following four options:

- None
- 52A
- 52B
- Both 52A and 52B

Where `None` is selected no CB status is available. Where only 52A is used on its own then the device will assume a 52B signal opposite to the 52A signal. Circuit breaker status information will be available in this case but no discrepancy alarm will be available. The above is also true where only a 52B is used. If both 52A and 52B are used then status information will be available and in addition a discrepancy alarm will be possible, according to the following table:

Auxiliary Contact Position		CB State Detected	Action
52A	52B		
Open	Closed	Breaker open	Circuit breaker healthy
Closed	Open	Breaker closed	Circuit breaker healthy
Closed	Closed	State unknown	Alarm raised if the condition persists
Open	Open	State unknown	Alarm raised if the condition persists

15.15.1 CB STATE MONITORING LOGIC

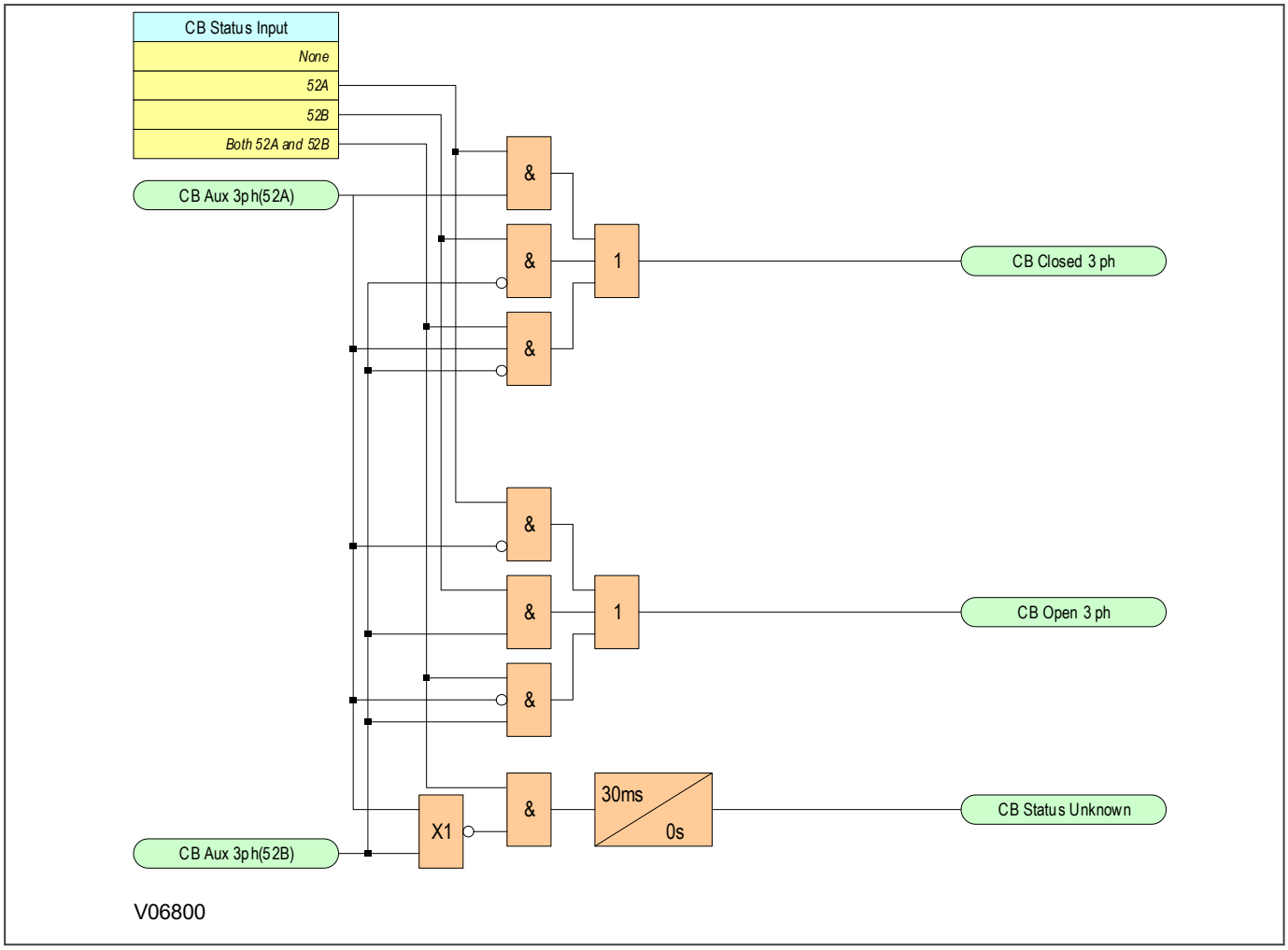

Figure 120: CB state monitoring logic

15.16 SETPOINT GROUP

The IED provides six setting groups. All settings contained under the protection setpoints are reproduced in six groups, identified as Groups 1, 2, 3, 4, 5 and 6. These multiple settings provide the capability for both automatic and manual switching to protection settings for different operating situations. Automatic (adaptive) protection setting adjustment is available to change settings when the power system configuration is altered.

Automatic group selection can be initiated from any signal configured in the ***Setting Group (n)*** settings at ***SETPOINTS\CONTROL\SETPOINT GROUP***, being (n) from 2 to 6.

Group 1 is the default for the Active Group and is used unless another group is requested to become active. The active group can be selected with the ***Active Settings*** setting at ***SETPOINTS\CONTROL\SETPOINT GROUP***, or by the activation of the signals configured at ***Setting Group (n)*** settings. If there is a conflict in the selection of the active group, between the ***Active Settings*** setting and the activation of the signals configured in any of the ***Setting Group (n)*** settings, the higher numbered group is made active. For example, if the inputs for Group 2, 3, 4, 5 and 6 are all asserted, the IED uses Group 6. If the logic input for Group 6 then becomes de-asserted, the IED uses Group 5. Some application conditions require that the IED does not change from the present active group. The prevention of a setpoint group change can be applied by configuring the ***Change Inhib.(n)*** settings, being (n) from 1 to 6. These settings select the signals that inhibits the change of the active setpoint group. If needed, typically this change inhibit is done when any of the overcurrent (phase, earth (measured or derived), sensitive earth or negative sequence), overvoltage, bus or line undervoltage, or underfrequency elements are picked-up.

Setpoint Group Path: ***SETPOINTS\CONTROL\SETPOINT GROUP***

Note:
*The Active Group status can be accessed at **DEVICE STATUS\DEVICE STATUS** path, directly in the HMI, or through the **Monitor** tab in EnerVista Configuration.*

15.17 SELECT BEFORE OPERATE

15.17.1 SELECT BEFORE OPERATE IMPLEMENTATION

In 30TE models with a configurable single line diagram, Multilin Agile provides local control of the breaker and switches using the front panel pushbuttons through the Select Before Operate (SBO) function. The SBO feature is only available in local mode, when the relay is ordered with 30TE. SBO can be enabled using the setpoint ***Local with SBO*** located under menu Path: **Setpoint\Control\Local Control w/SBO**.

- When the setting ***Local with SBO*** is enabled, it will enable the local control of all the CB and Switches using the front panel. In this case, the breaker setting ***Control By*** and all the switches setting ***Control By*** become default to local mode. The settings ***Control By*** for Breaker and Switches are located under menu Path: **Setpoint\Control\CB Control for** Breaker, and Path: **Setpoint\Control\Switch Control**, for Switches respectively.
- When ***Local with SBO*** remains disabled, then the breaker can be individually set to local/remote/opto modes using the Setpoint ***Control By*** in menu Path: **Setpoint\Control\CB Control**. Similarly, a switch can be individually set to local or remote mode using the Setpoint ***Control By*** in menu Path: **Setpoint\Control \Switch Control**.

15.17.2 SELECT BEFORE OPERATE LOGIC

15.17.2.1 SWITCHING DEVICE SELECTION USING NAVIGATION KEYS

The Multilin Agile front panel provides navigation pushbuttons that highlight the component (breaker or disconnect \overhead switch) from the single line diagram. As shown in the following figure, the navigation pushbuttons (Up/Down/Left/Right), are used to browse through the SLD components. These pushbuttons are used for SLD navigation only. The navigation starts with highlighting the first breaker, and then goes through all the other components in sequence, until the last one (breaker or switch). Only the breakers (contactor) and switches included in the SLD from the display will be browsed (navigated).

Note:
The selection of Breaker and Switches is available only to those configured and included in the SLD. If the breaker or a switch ***Function*** *setting is programmed to Disabled, it will be skipped from the sequence during navigation.*

15.17.2.2 SWITCHING DEVICE CONTROL USING FRONT PANEL

Once the breaker or the switch is highlighted in the SLD, using the navigation pushbuttons, the component must be selected before an open or close action is performed. The selection of the component is performed by pressing the "ENTER" key from the front panel. A flash message "CB Selected", or "Sw # Selected" appears on the screen to denote the selection.

If breaker is selected, it can be controlled using:

- The hardcoded ‘Open (O)’ and ‘Close (I)’ pushbuttons or
- If, in addition to local mode, Opto control is configured under setting ***Control By***, once the breaker is selected, the control signal programmed under settings ***Init Close*** and ***Init Open*** can be used to Close and Open the breaker, respectively. With SBO, the addition of Opto-inputs for closing and opening the breaker in local mode provides the flexibility to use a pair of pushbuttons mounted on the cubicle in close proximity to the relay.

If switch is selected, it can be Opened and Closed using the hardcoded ‘Open (O)’ and ‘Close (I)’ pushbuttons, respectively. The relay doesn’t allow closing and opening of a switch using Opto-inputs, regardless of the SBO being enabled or disabled.

When ***Local with SBO*** is disabled, the breaker can be controlled directly by the hardcoded ‘Open (O)’ and ‘Close (I)’ pushbuttons without additional confirmation or manually using the ***Trip/Close*** command directly or from the

Front Port. The ***Trip/Close*** command is located at ***SETPOINTS\CONTROL\CB CONTROL*** menu. Opto-inputs can also be used to open and close, if ***Control By*** is programmed to Opto, Local+Opto or Local+Opto+Remote.

When ***Local with SBO*** is disabled, the local control for the disconnect\overhead switches is suspended from the front panel. Open and Close control of switches using the Open (O) and Close (I) pushbuttons on the front panel is only available when ***Local with SBO*** is enabled. When ***Local with SBO*** is disabled, switches cannot be controlled using the front panel pushbuttons in local mode. In that case, switches can be controlled manually using the ***Trip/Close*** command directly or from the Front Port. The ***Trip/Close*** command is located at ***SETPOINTS\CONTROL \SWITCH CONTROL*** menu.

The navigation, the breaker or switch selection and the front panel control are operational when in ***Local mode with SBO*** is enabled. When both ***Local with SBO*** and remote options are configured, the default breaker and switch control remain in Remote mode until the relay enters into local mode by pressing the L/R pushbutton on the front panel for 3 seconds. When the relay enters into front panel local mode control, LM letters are displayed on the relay display banner and Local Mode On operand becomes true. Alternatively, an LED can be programmed to turn ON using the Local Mode On operand to indicate activation of local control from the front panel of the relay.

Note:
Regardless of whether remote mode is selected with local mode, the L/R pushbutton must be pressed for 3 seconds to enter into the front panel local control mode.

With IEC 61850 OrCAT control, the relay can also enter in ***Local Mode*** control when setting '***IED Local Status'*** operand becomes true. Once in Local Mode, when '***L/R PB***' is short pressed the relay exits Local Mode. Moreover, the relay can also exit the Local Mode when setting '***IED Local Status***' operand becomes false only if the relay was entered into Local Mode using the '***IED Local Status***'. If the relay was entered into Local Mode using the '***L/R PB 3sec pulse***' then '***IED Local Status***' cannot be used to exit the Local Mode.

The selected component from SLD can be deselected by one of the following three ways:

- If the time programmed in ***SETPOINTS\CONTROL\LOCAL CONTROL W/SBO\CB/SW SELECT TIMEOUT*** expires
- The RESET PB is short pressed. It only deselects the selected component while the relay remains in Local Mode and the LM icon is displayed.
- Short pressing of the L/R PB can also be used to deselect the selected component. Moreover, by pressing the L/R PB while in local mode, the relay exits local mode and the LM icon turns off

Note:
The "HOME" button will not deselect the selected object. To navigate to the home page, the component must first be de-selected on the SLD page using the PB 'L/R'.
*When setting **Local with SBO** is enabled and the relay enters into the front panel local control mode by pressing L/R button for 3 seconds, the 'Reset' button is exclusively used by the relay to deselect the switching component on the SLD, and therefore, any other resetting functionality of the Reset button is ignored.*
The selection of the breaker or a switch allows the user to apply only one control command, either open or close. After the status of the component is confirmed to match the applied control action, the component gets deselected. The component needs to be selected again to apply another command.

The local mode breaker or switch selection and operation is only active if the user has the proper level of security access.

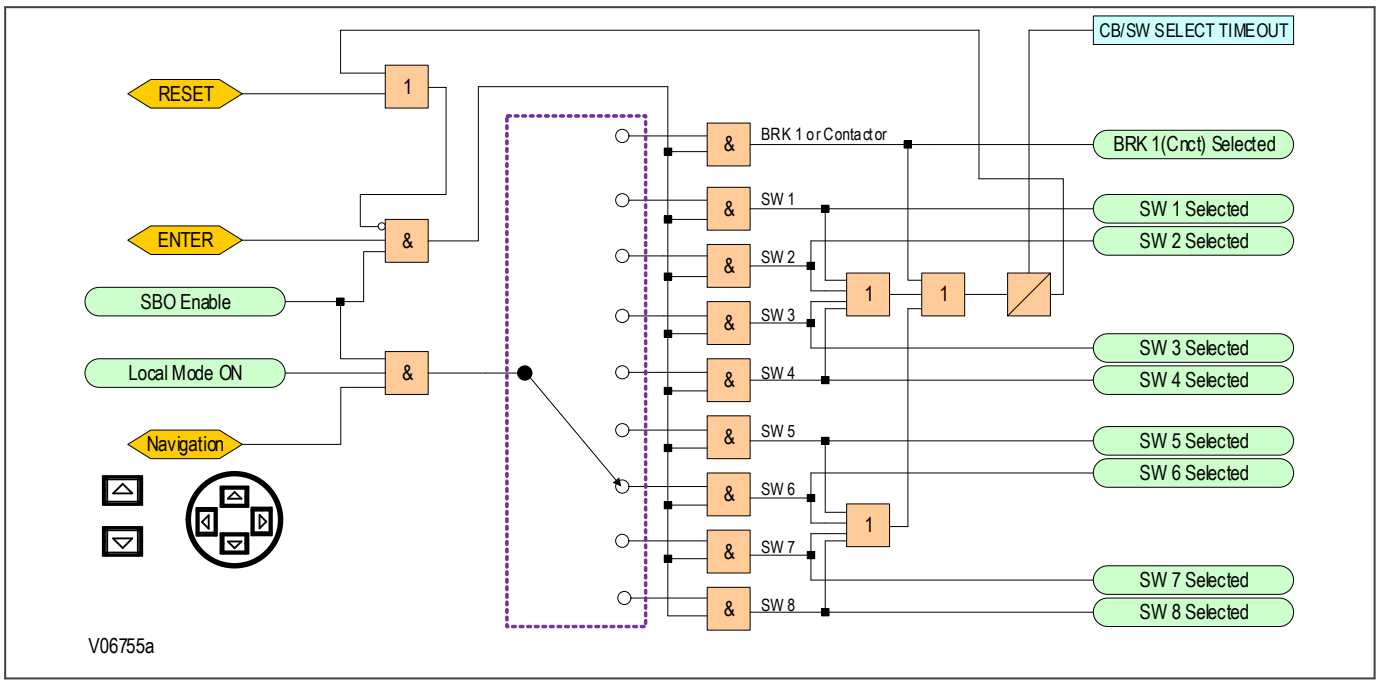

Figure 121: Navigation and SLD component selection

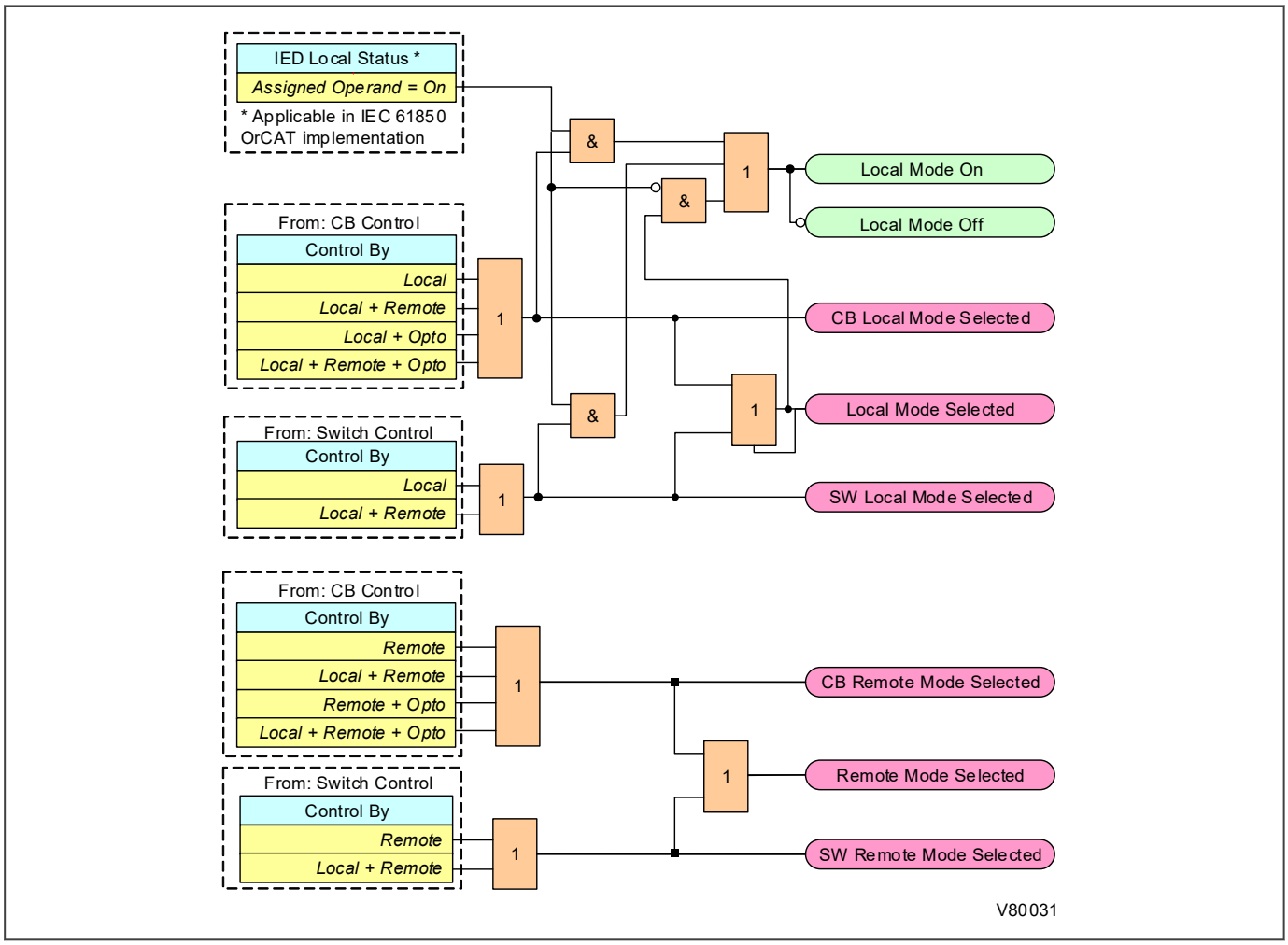

Figure 122: 20TE local and remote mode selection logic

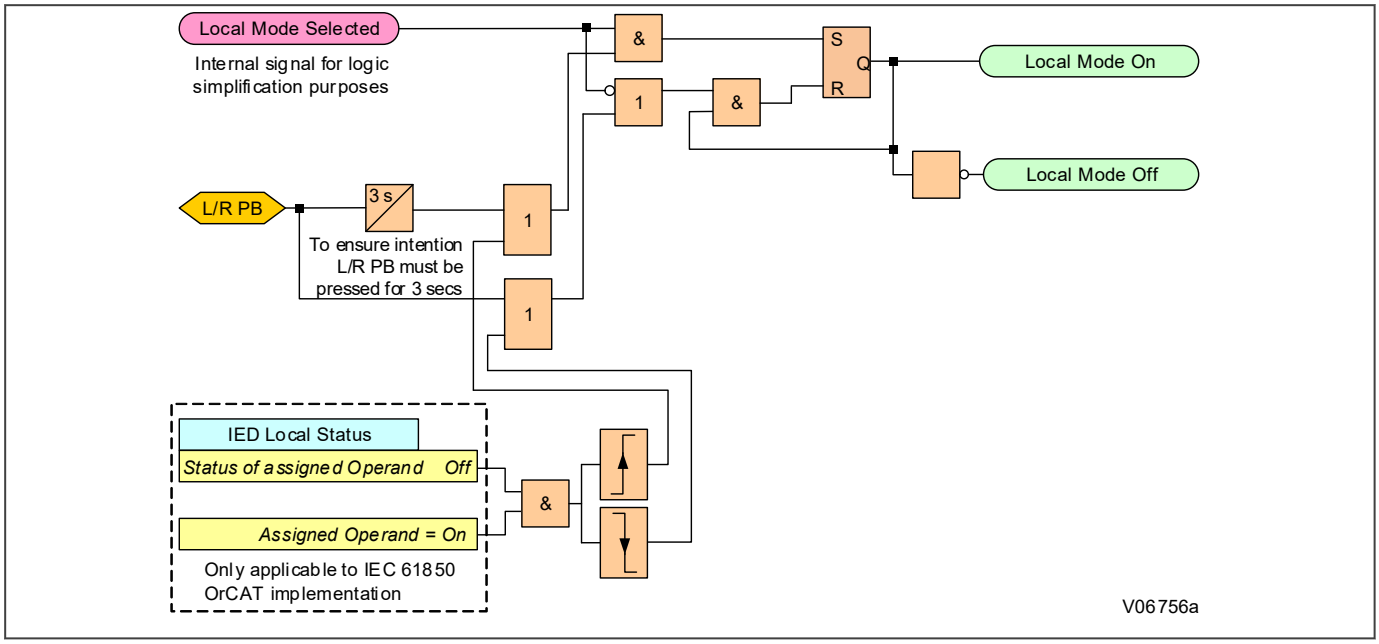

Figure 123: Multilin Agile 30TE local mode on logic

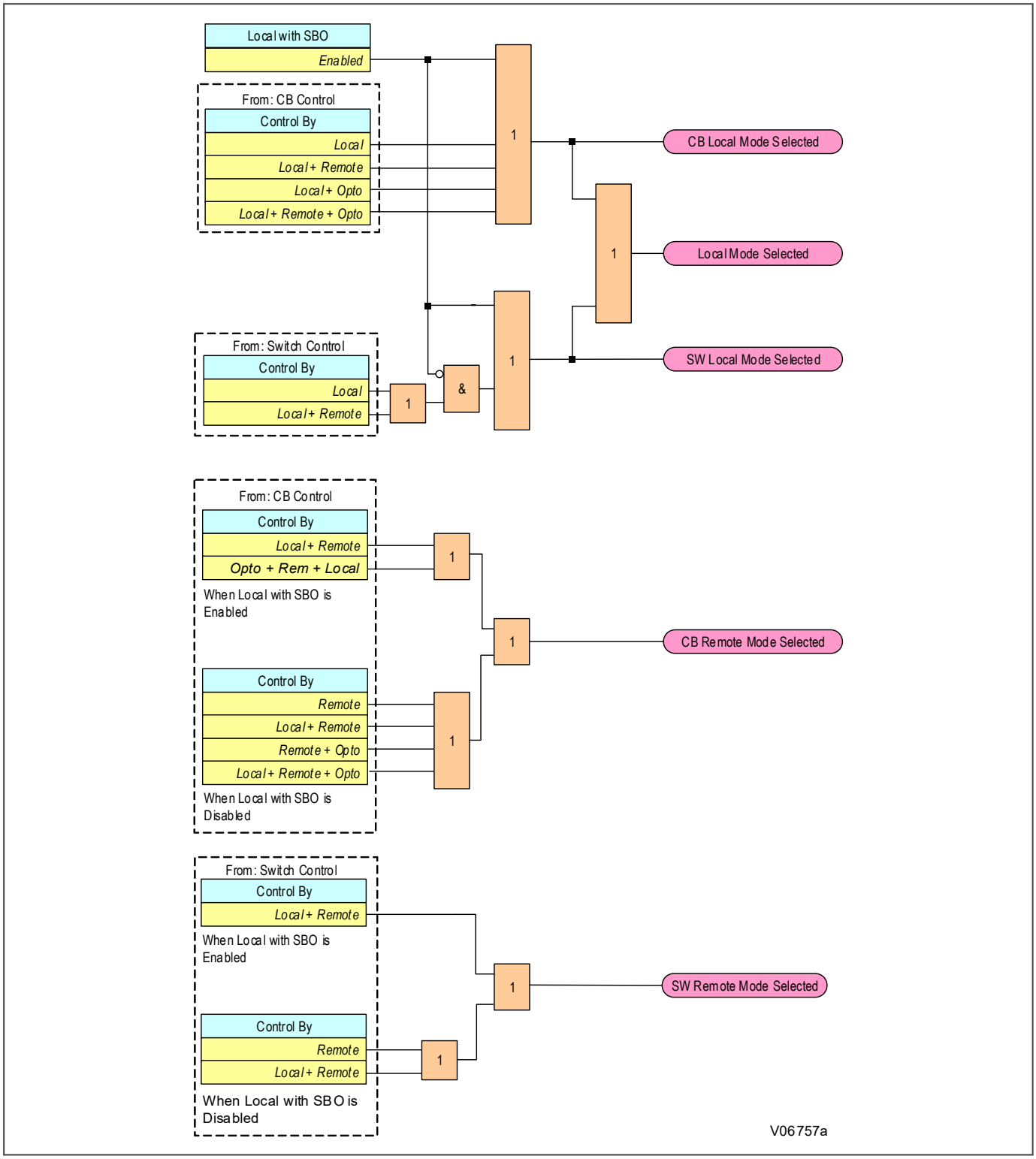

Figure 124: Multilin Agile 30TE local and remote mode selection logic

15.18 CIRCUIT BREAKER CONTROL

Although some circuit breakers do not provide auxiliary contacts, most provide auxiliary contacts to reflect the state of the circuit breaker. These are:

- CBs with 52A contacts (where the auxiliary contact follows the state of the CB)
- CBs with 52B contacts (where the auxiliary contact is in the opposite state from the state of the CB)
- CBs with both 52A and 52B contacts

Circuit Breaker control is only possible if the circuit breaker in question provides auxiliary contacts. The ***Status Input*** setting in the ***SETPOINTS\SYSTEM\CB SETUP*** *MENU* element must be set to the type of circuit breaker. If no CB auxiliary contacts are available then this setting should be set to `None`, and no CB control will be possible.

For local control, the ***Control by*** setting should be set at ***SETPOINTS\CONTROL\CB CONTROL*** menu.

The output contact can be set to operate following a time delay defined by the setting ***Man Close Delay***. One reason for this delay is to give personnel time to safely move away from the circuit breaker following a CB close command.

The control close cycle can be cancelled at any time before the output contact operates by any appropriate trip signal, or by activating the ***Reset Close Dly*** signal.

The length of the trip and close control pulses can be set via the ***Trip Pulse Time*** and **Close Pulse Time** settings respectively. These should be set long enough to ensure the breaker has completed its open or close cycle before the pulse has elapsed.

If an attempt to close the breaker is being made, and a protection trip signal is generated, the protection trip command overrides the close command.

If the CB fails to respond to the control command (indicated by no change in the state of CB Status inputs) an alarm is generated after the relevant trip or close pulses have expired. These alarms can be viewed on the LCD display, remotely, or can be assigned to output contacts using the Flexlogic Equation Editor.

> *Note:*
> *The **Healthy Time** and **Sys Check time** set under the **CB CONTROL** menu section are applicable to manual circuit breaker operations only. These settings are duplicated in the **AUTORECLOSE** menu at **SETPOINTS\CONTROL** path for autoreclose applications (Autoreclose is a Cortec dependent feature).*

The device includes the following options for control of a single circuit breaker:

- The IED menu (local control)
- The Hotkeys (local control 20TE)/Front Panel Pushbuttons (local control 30TE)
- The opto-inputs (local control)
- SCADA communication (remote control)

15.18.1 CB CONTROL USING THE IED MENU

Manual trips and closes can be manually launched using the ***Trip/Close*** command at ***SETPOINTS\CONTROL\CB CONTROL*** menu. This can be set to `No Operation`, `Trip`, or `Close` accordingly.

For this to work you have to set the ***Control by*** setting to `Local`, `Local+Remote`, `Opto+Local`, or `Opto+Rem +Local` in the *CB CONTROL* menu.

15.18.2 CB CONTROL USING THE HOTKEYS IN 20TE FRONT PANEL

The hotkeys allow the user to manually trip and close the CB without the need to enter the *CB CONTROL* menu. For this to work the ***Control by*** setting must be set to `Local`, `Local+Remote`, `Opto+Local`, or `Opto+Rem+Local` in the *CB CONTROL* element.

CB control using the hotkey is achieved by pressing the right-hand Up button directly below LCD screen text CB CTRL at the Default Display that shows the Model Number, Database Date and Shortcuts. This button is only enabled if:

- The ***Control by*** setting is at ***SETPOINTS\CONTROL\CB CONTROL*** set to one of the options where local control is possible
- The ***Status Input*** setting at ***SETPOINTS\SYSTEM\CB SETUP*** is set to '52A', '52B', or 'Both 52A and 52B'

Once in CB CTRL hotkey operating mode by pressing the right-hand Up button, the CB Status (Closed, Open or Unknown) will be displayed. Depending on the CB status, different command options will be available: If the CB is currently closed, the command text on the bottom left of the LCD screen reads `Trip`. If the CB is currently open, the command text on the bottom right of the LCD screen will read `Close`. If the CB status is unknown, there is no command text given, just the `Exit` hotkey.

If a `Trip` is executed, a screen with the CB status will be displayed once the command has been completed. If a `Close` is executed, a screen with a countdown will appear while the command is being executed. The time delay is determined by the ***Man Close Delay*** setting in the *CB CONTROL* menu. When the command has been executed, a screen confirming the present status of the circuit breaker is displayed. The user is then prompted to select the next appropriate command or exit.

The hotkey functionality is summarised graphically below:

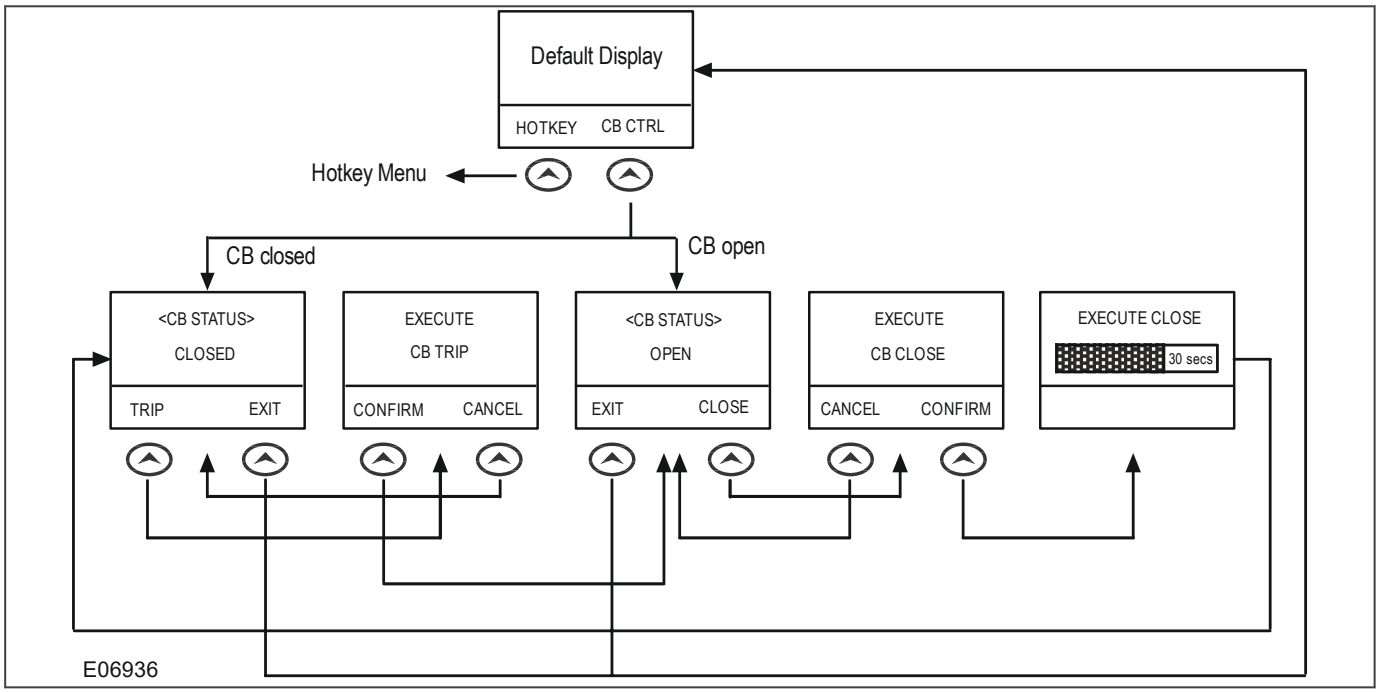

Figure 125: Hotkey menu navigation

15.18.3 CB CONTROL USING THE OPEN AND CLOSE PUSHBUTTONS IN 30TE FRONT PANEL

Multilin Agile 30TE models with configurable single line diagram, provide local control of the breaker using the front panel pushbuttons Open (O) or Close (I), with or without Select Before Operate (SBO) function. SBO can be

enabled configuring the ***Local with SBO*** setting at ***SETPOINT\CONTROL\LOCAL CONTROL W/SBO*** path as Enabled.

> *Note:*
> *The Select Before Operate (SBO) feature is only available in local mode when the device is ordered with 30TE.*

Further details on the Local Control with SBO can be found in section SELECT BEFORE OPERATE.

When the setting ***Local with SBO*** is `Enabled`, once the breaker is selected on the single-line diagram, it enables local control of the breaker using the front panel. In this case, the setting ***Control By*** becomes defaulted to Local mode.

When ***Local with SBO*** remains `Disabled` the breaker can be individually set to `local/remote/opto` modes using the setpoint ***Control By***.

> *Note:*
> *Without the SBO, the breaker can be controlled directly using the hardcoded **Open (O)** and **Close (I)** pushbuttons.*

In 30TE models with configurable single line diagram, with both local and remote options configured, by default the breaker control remains in Remote mode until the device enters Local mode by pressing ***L/R*** pushbutton on the front panel, or the Opto-Inputs are used. To control the breaker using the front panel control, Local mode control must first be enabled by pressing the ***L/R*** pushbutton for 3 seconds. When the device enters in front panel local mode control, ***LM*** letters are displayed on the device display banner and ***Local Mode On*** operand becomes true. Alternatively, an LED can be programmed to turn ON using ***Local Mode On*** Flexlogic operand, to indicate the activation of the local control from the front panel of the device.

15.18.4 CB CONTROL USING THE OPTO-INPUTS

Certain applications may require the use of pushbuttons or other external signals to control the various CB control operations. It is possible to connect such pushbuttons and signals to opto-inputs and map these to the relevant IEDs signals.

In 20TE models, for this to work, the ***Control by*** setting must be set to `opto`, `Opto+Local`, `Opto+Remote`, or `Opto+Rem+Local` in the *CB CONTROL* menu.

In 30TE models:

If ***Select Before Operate*** feature is not enabled, this is, the ***Local with SBO*** setting at ***SETPOINTS\CONTROL \LOCAL CONTROL W/SBO*** path is `Disabled`, the Opto-inputs can be directly used if the ***Control by*** setting at ***CB CONTRO***L menu at ***SETPOINTS\CONTROL*** path is set to `Opto, Opto+Local, Opto+Remote,` or `Opto+Rem +Local`.

If ***Select Before Operate*** feature is enabled, this is, ***Local with SBO*** setting at ***SETPOINTS\CONTROL\LOCAL CONTROL W/SBO*** path is `Enabled`, and ***Control by*** setting is set to `Opto+Local` or `Opto+Remote`, then, once the breaker is selected on the single line diagram, the control signals programmed under ***Init Close*** and ***Init Trip*** settings at ***CB CONTROL*** menu at ***SETPOINTS\CONTROL*** path, can be used to Close and Open the breaker, respectively. With SBO, the addition of Opto-inputs for closing and opening the breaker in local mode provides flexibility to use a pair of pushbuttons mounted on the cubicle in the same proximity with the device.

15.18.5 REMOTE CB CONTROL

Remote CB control can be achieved by setting the ***Trip/Close*** in the ***CB CONTROL*** menu at ***SETPOINTS/ CONTROL*** path to trip or close, by using a command over a communication link.

For this to work, the ***Control by*** setting must be set to `Remote`,`Local+Remote`, `Opto+remote`, `Opto+Local +Rem+Local` in the *CB CONTROL* menu.

We recommend that separate relay output contacts are allocated for remote CB control and protection tripping. This allows you to select the control outputs using a simple local/remote selector switch as shown below. Where this feature is not required the same output contact(s) can be used for both protection and remote tripping.

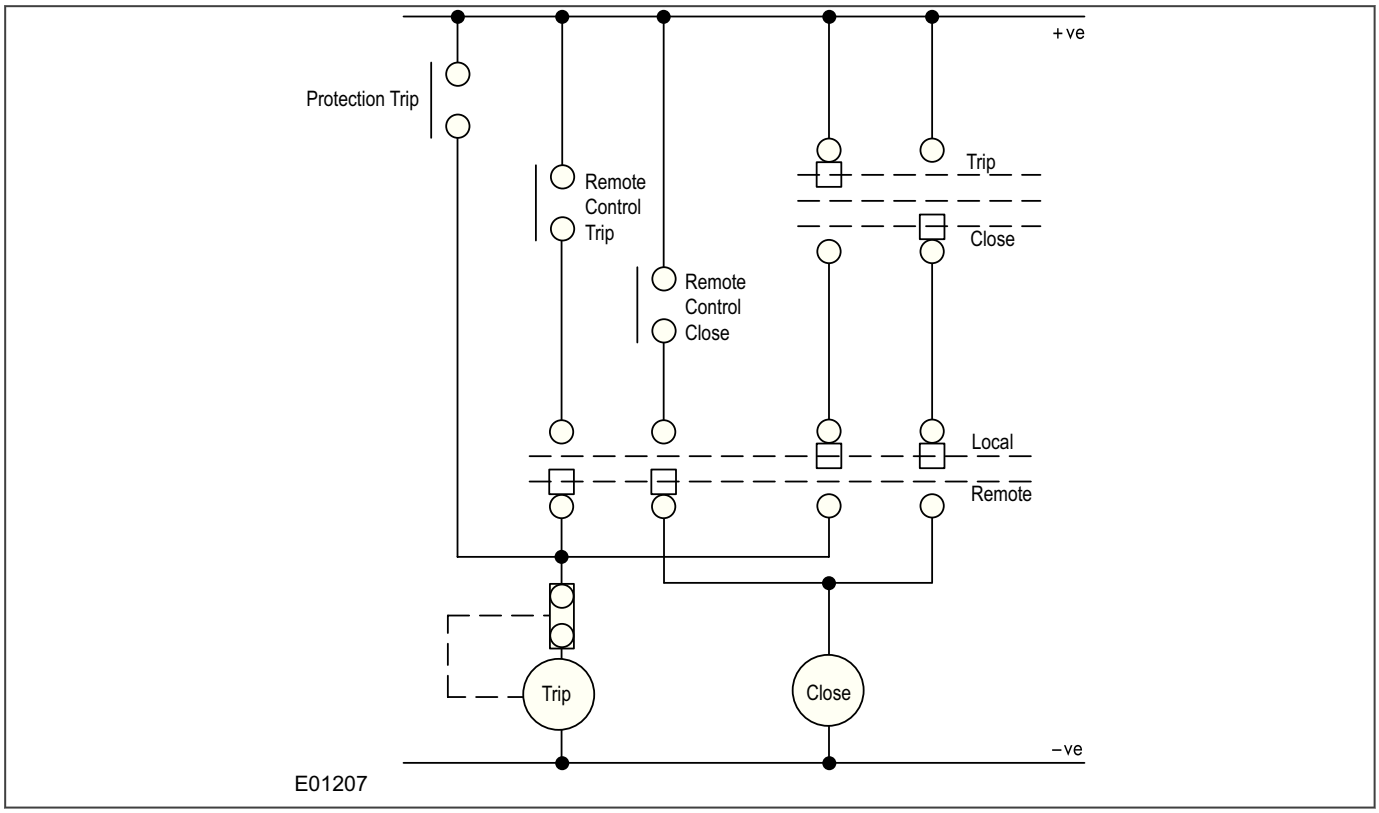

Figure 126: Remote control of circuit breaker

15.18.6 SYNCHRONISATION CHECK

Where the check synchronism function is set, this can be enabled to supervise manual circuit breaker Close commands. A circuit breaker Close command will only be issued if the Check Synchronisation criteria are satisfied. A time delay can be set with the setting ***Sys Check time.*** If the Check Synchronisation criteria are not satisfied within the time period following a Close command the device will raise a `Man No Checksync` logic signal that can be used for signalisation.

15.18.7 CB HEALTHY CHECK

A CB Healthy check is available if required. The ***Healthy*** setting at ***SETPOINTS\CONTROL\CB CONTROL*** path accepts any logic signal or opto input to indicate that the breaker is capable of closing (e.g. that it is fully charged). A time delay can be set with the setting ***Healthy Time***. If the CB does not indicate a healthy condition within the time period following a Close command, the device will raise a `Man CB Unhealthy` logic signal that can be used for signalisation.

15.18.8 CB CONTROL LOGIC

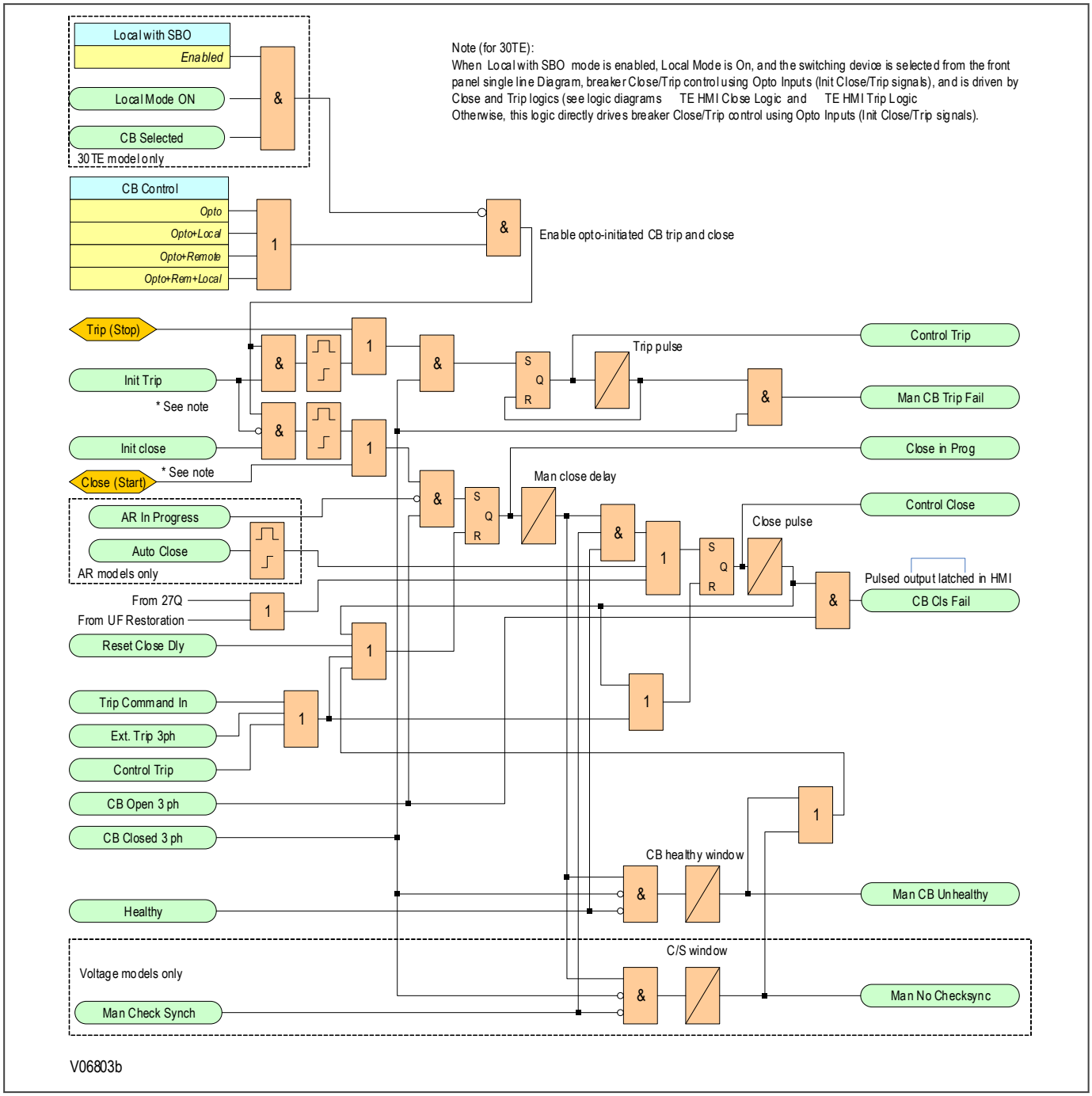

Figure 127: CB control logic

If an attempt to close the breaker or contactor is being made, and a protection trip signal is generated, the protection trip command overrides the close command. The ***Close in Prog*** signal is activated when an attempt to close the breaker or contactor is initiated.

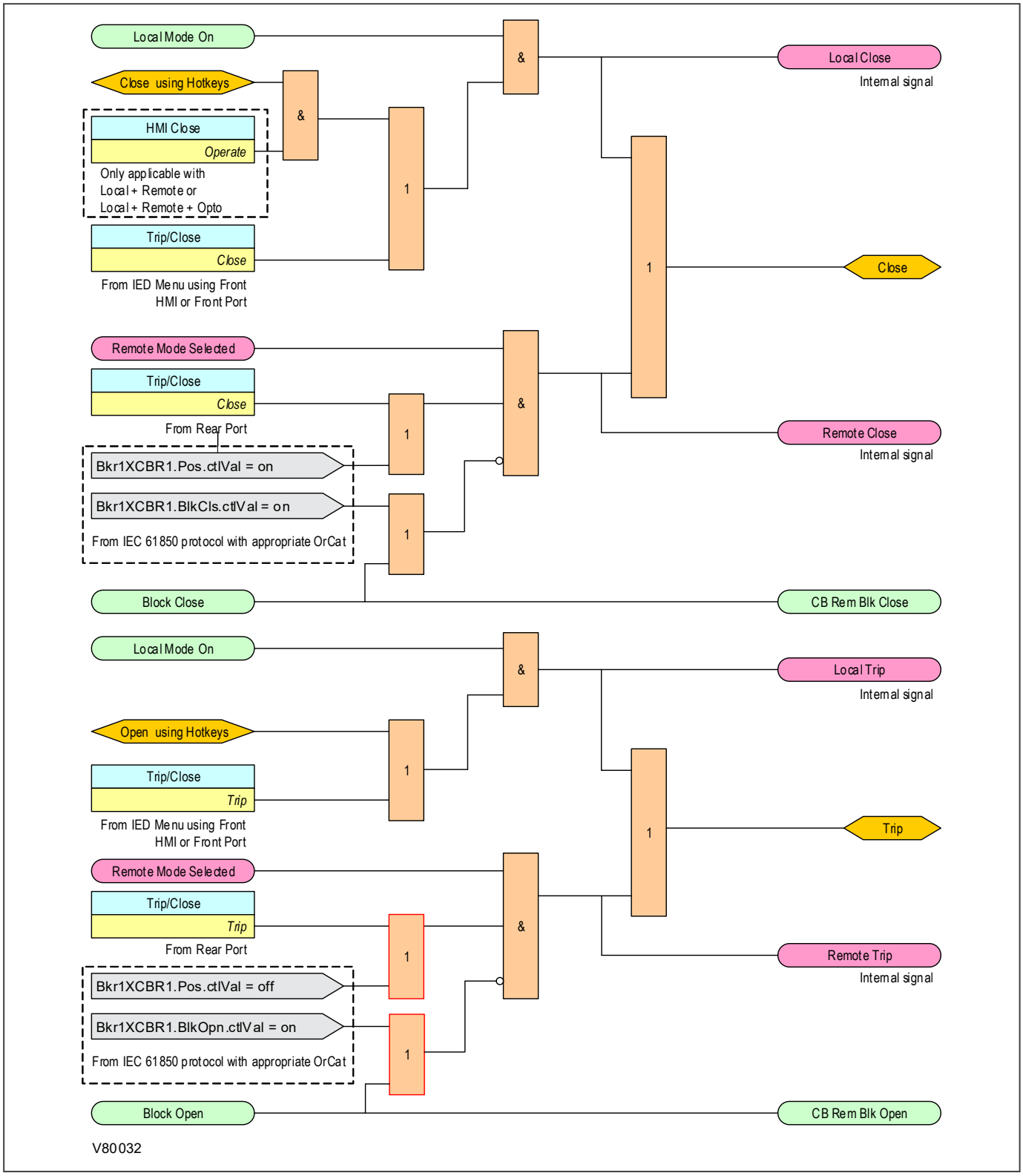

Figure 128: 20TE HMI close and HMI trip logics

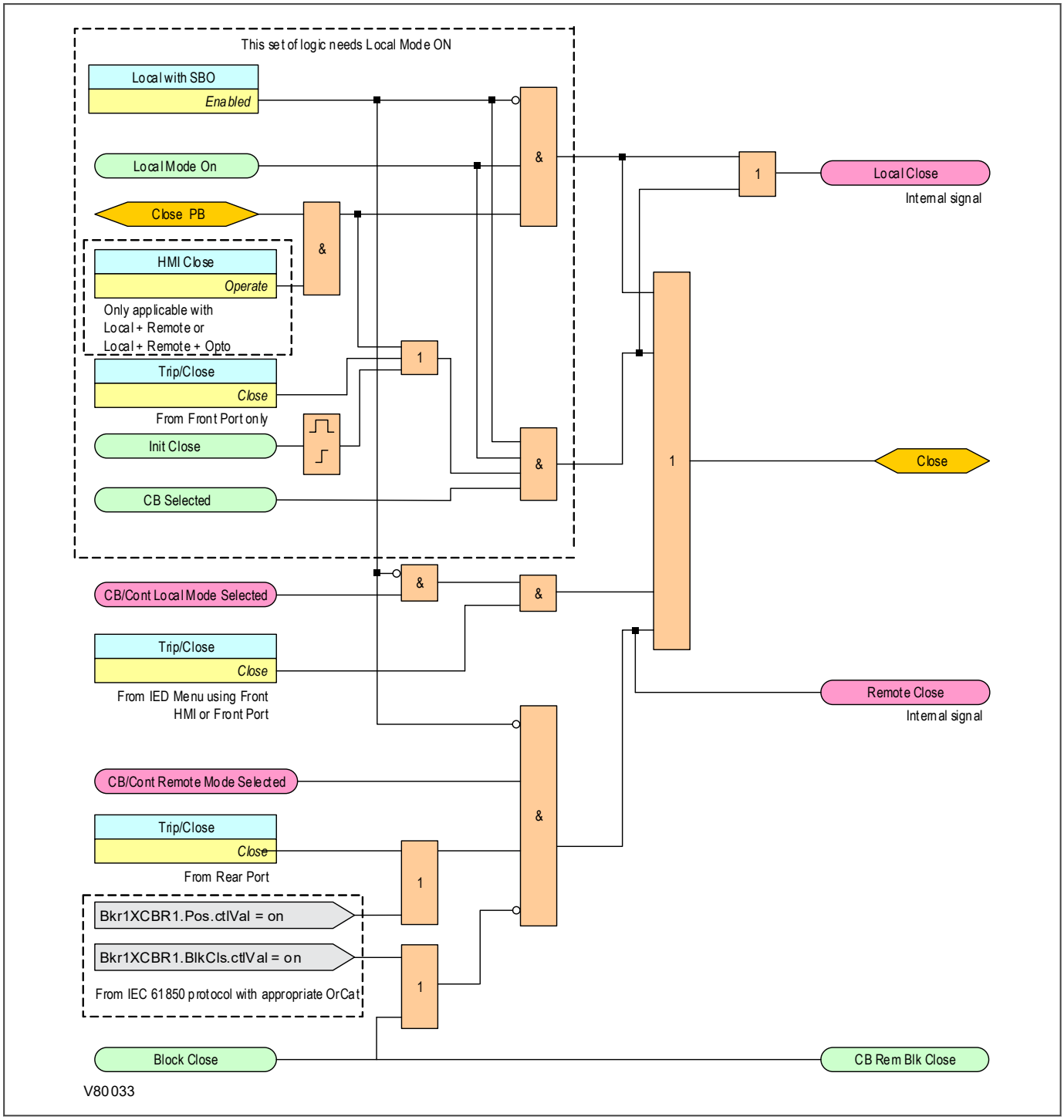

Figure 129: 30TE HMI close logic

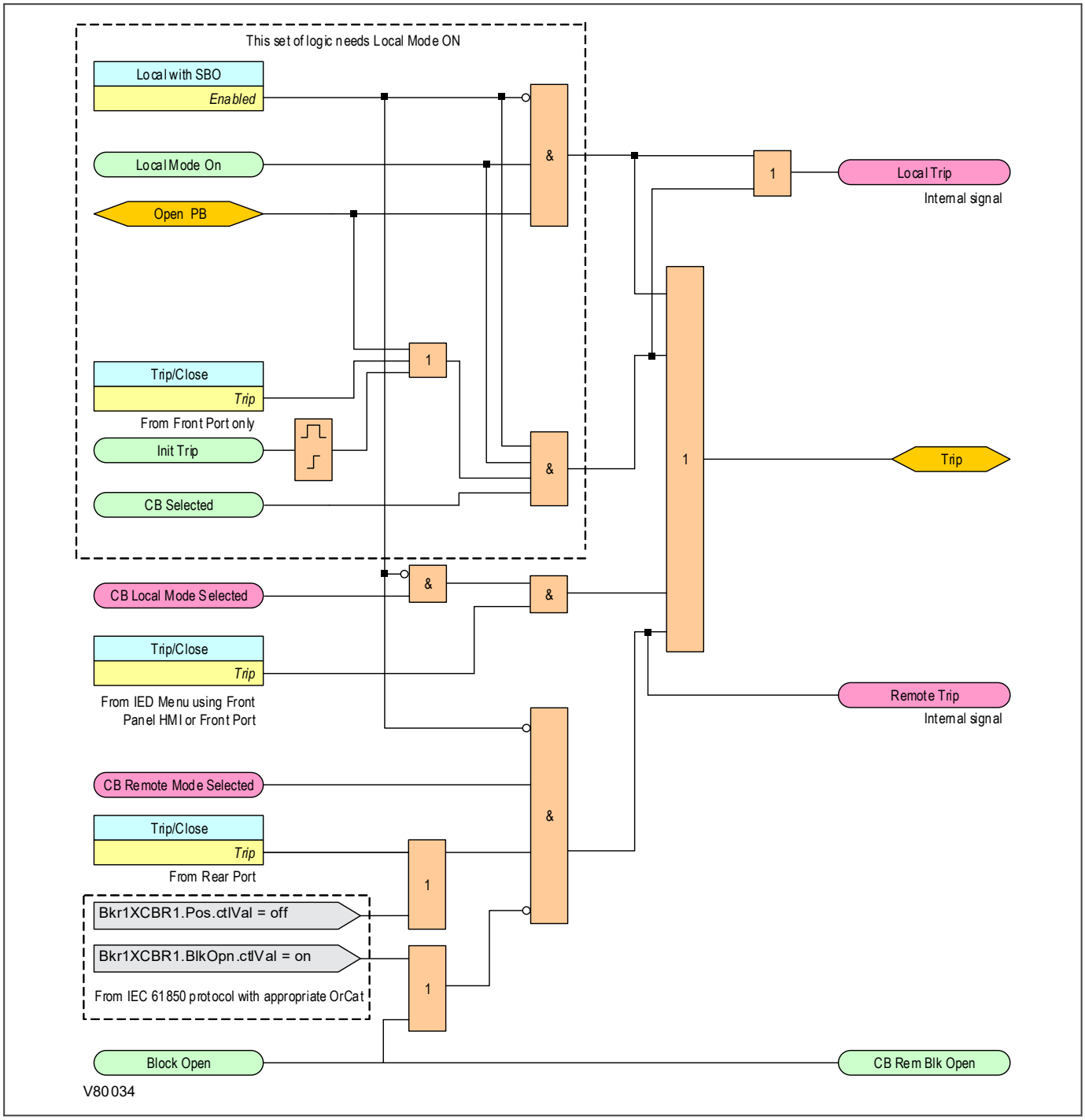

Figure 130: 30TE HMI trip logic

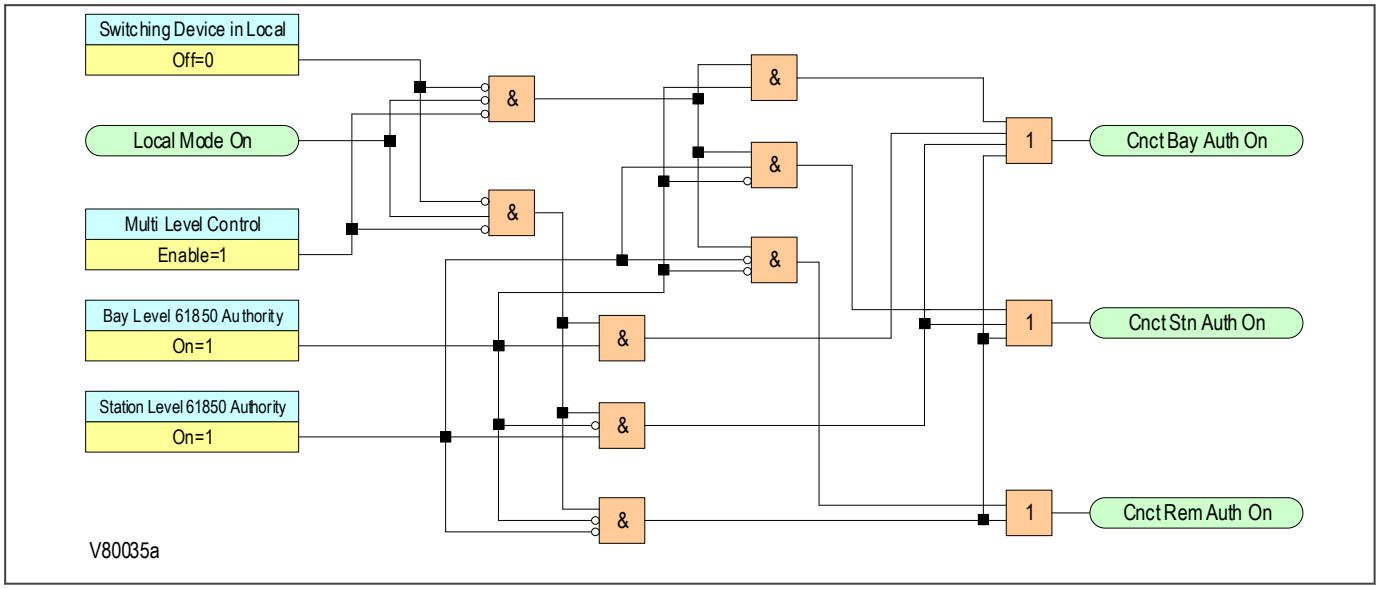

Figure 131: IEC 61850 control authority settings logic

15.18.9 CB CONTROL SETTINGS DESCRIPTION

This section describes the IEC 61850 control authority feature implementation in Multilin Agile.

Within the substation, control commands to the primary equipment, such as breaker or contactor or disconnect switch, can be originated from one of the three levels: Bay level, Station level or Remote level. The local/remote control feature (described in IEC 61850 7-4: Annex B) allows users to enable or disable control authority from one or more of the three levels.

The below table shows the control authority implemented in Multilin Agile IEDs.

Control Authority

	Switch	Bay Control			Manual Control at Switch Process)	Non 61850 Bay Control (Front Panel PB, HMI)	Command From		
							Bay	Station	NCC
		Mode of Switching Authority for Local Control	Local Control Behaviour	Control Authority at Station Level			OrCat		
LLN0.LocKey	XCBR.Loc XSWI.Loc	LLN0.MltLev	CSWI.Loc	CSWI.LocSta OR LLN0.LocSta			Local Ctl (Bay)	Station	Remote
IED Local Status = 1	Local Mode Selected = 1	Multilevel Control (ENABLED)	Bay Level 61850 Authority (ON)	Station Level 61850 Authority (ON)					
T	T	F	n.a.	n.a.	AA	AA	NA	NA	NA
F	F	F	T	n.a.	AA	AA	AA	NA	NA
F	F	F	F	T	AA	AA	NA	AA	NA
F	F	F	F	F	AA	AA	NA	NA	AA
T	T	T	n.a.	n.a.	AA	AA	NA	NA	NA
F	F	T	T	n.a.	AA	AA	AA	NA	NA
F	F	T	F	T	AA	AA	AA	AA	NA
F	F	T	F	F	AA	AA	AA	AA	AA

	Switch	Bay Control			Manual Control at Switch Process)	Non 61850 Bay Control (Front Panel PB, HMI)	Command From		
							Bay	Station	NCC
		Mode of Switching Authority for Local Control	Local Control Behaviour	Control Authority at Station Level			OrCat		
LLN0.LocKey	XCBR.Loc XSWI.Loc	LLN0.MltLev	CSWI.Loc	CSWI.LocSta OR LLN0.LocSta			Local Ctl (Bay)	Station	Remote

Loc status (behaviour of the LN reg. switching authority)

T = TRUE command only allowed at this level

F = FALSE command not allowed at this level

n.a. = not applicable the position of this Loc is of no importance

Command

AA = ALWAYS ALLOWED Command always allowed

NA = NOT ALLOWED Command not allowed

MtlLev (mode of switching authority for local control)

F = only one level (Originator) at a time has the switching authority (default, if this data object is not present)

T = more than one level (Originator) at any time has the switching authority (e.g. station and bay level)

Non-61850 Bay Control - Any manual control from the relay, such as control from Front panel or relay push buttons or command initiated from Flexoperands.

With ***IED Local Status*** setting, the operand ***Local Mode On*** is generated when the value of the ***IED Local Status*** setting at ***SETPOINTS\DEVICE\COMMUNICATION\GENERAL*** path is True and, either the ***Local with SBO*** setting at ***SETPOINTS\CONTROL\LOCAL CONTROL W/SBO*** is `Enabled` or the ***Control By*** setting at ***SETPOINTS\CONTROL\CB CONTROL*** is configured to either `Local, Local+Remote, Opto+Local, Opto +Rem+Local`. LLN0.Loc is mapped to **Local Mode On**.

Manual control at switch (process) - means the control outside IED, may be breaker is controlled directly from control panel without IED intervention.

There are several settings in Multilin Agile to configure IEC 61850 control authority, these settings are placed at ***SETPOINTS\DEVICE\COMMUNICATIONS\GENERAL*** for generic settings and at ***SETPOINTS\CONTROL\CB CONTROL*** and ***SETPOINTS\CONTROL\SWITCH CONTROL*** for breaker and switches respectively.

GENERIC SETTINGS

These settings can be set at ***SETPOINTS\DEVICE\COMMUNICATIONS\GENERAL*** path.

Multi Lvl Ctrl

When this setting is set to `Enabled`, control authority from multiple levels (Bay, Station and Remote) are allowed simultaneously based on Local/Remote status and status authority status. Otherwise only one level has the authority to control, based on Local/Remote status and status authority status.

IED Local Status

This setting allows the selection of an operand, that indicates IED in local mode. When the operand value is set, the IED is considered in local mode and when the operand is reset, the IED is considered in remote mode.

The ***IED Local Status*** setting is related to the ***Local Mode On*** Flexlogic operand.

With ***IED Local Status*** setting, the operand ***Local Mode On*** is generated when the value of the ***IED Local Status*** setting at ***SETPOINTS\DEVICE\COMMUNICATION\GENERAL*** path is True and, either the ***Local with SBO*** setting at ***SETPOINTS\CONTROL\LOCAL CONTROL W/SBO*** is `Enabled` or the ***Control By*** setting at ***SETPOINTS \CONTROL\CB CONTROL*** is configured to either `Local, Local+Remote, Opto+Local, Opto+Rem+Local`. LLN0.Loc is mapped to ***Local Mode On***.

StnLv 61850 Auth

This setting allows the selection of an operand that indicates the Station level authority status.

The operand status is modelled in the IEC 61850 server, using respective breakers CSWI LocSta data object. The operand status is applied to the control authority table to determine the control authority for different levels. It is an Edge driven function.

BAY SETTINGS (BREAKER AND SWITCHES)

These settings are available at ***SETPOINT\CONTROL\CB CONTROL*** for breaker and at **SETPOINT\CONTROL \SWITCH CONTROL** for switches (1 to 8).

BayLv 61850 Auth

This setting allows the selection of an operand that indicates the Bay level authority status.

The operand status is modelled in the IEC 61850 server using respective breakers CSWI Loc data object. The operand status is applied to the control authority table to determine the control authority for different levels. It is an Edge driven function.

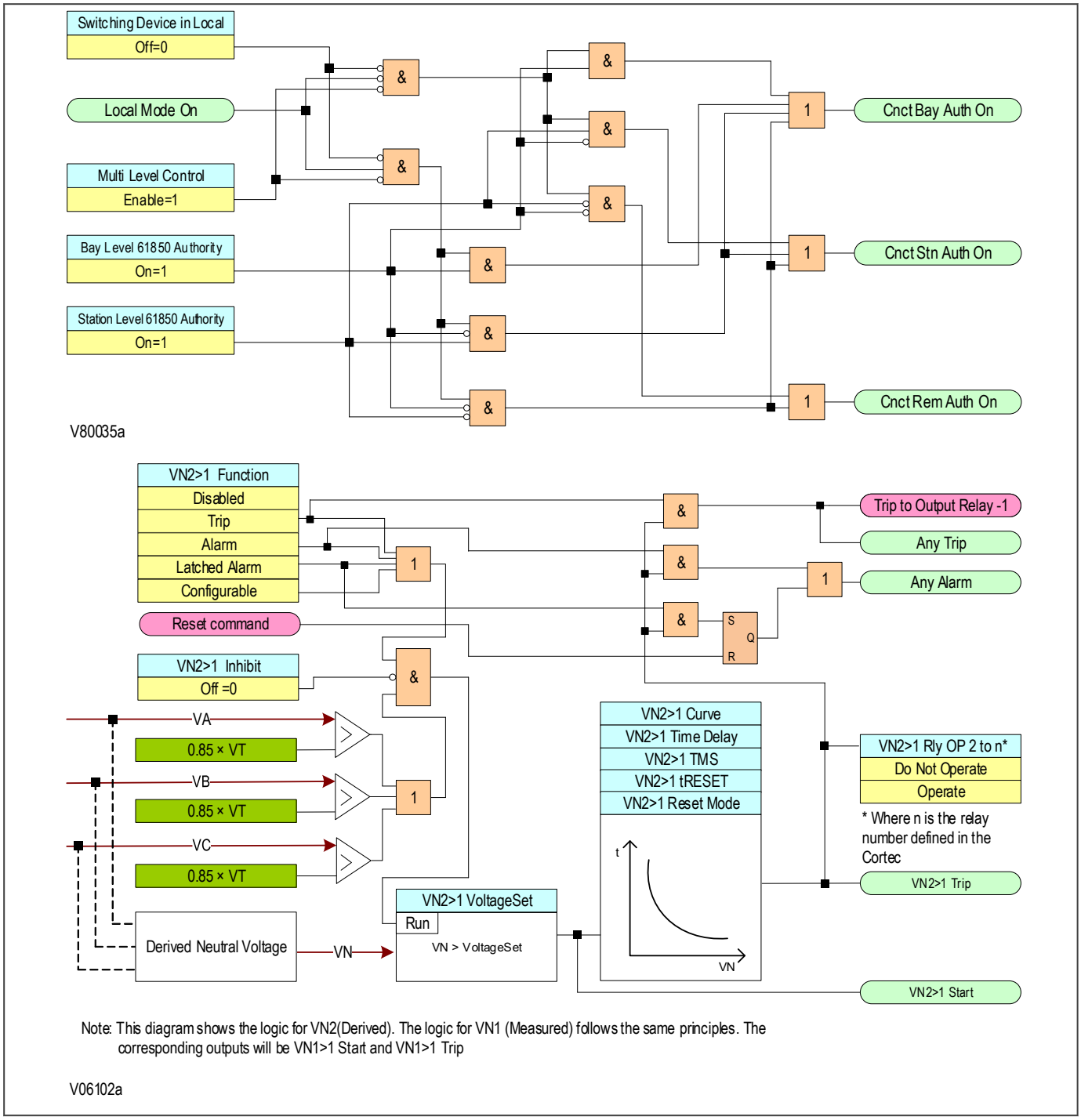

Figure 132: IEC 61850 control authority settings logic

15.18.10 CONTROL AUTHORITY (IEC61850)

The settings for the CB Control function are placed at ***SETPOINTS\CONTROL\CB CONTROL*** path.

The settings are as follows:

Control by

This setting selects the type of circuit breaker control to be used.

In 30TE models with configurable single line diagram, when the ***Local with SBO*** setting at ***SETPOINTS\CONTROL \LOCAL CONTROL W/SBO*** path is ***Enabled***, the default of this setting becomes `Local`.

An example of the default settings and ranges for 20TE or 30TE with ***Local with SBO*** set as `Disabled`, and 30TE with ***Local with SBO*** set as `Enabled`.

20TE or 30TE with ***Local with SBO*** set as `Disabled`.

Default: `Disabled`

Range: `Disabled, Local, Remote, Local+Remote, Opto, Opto+local, Opto+Remote, Opto+Rem +local`

30TE with ***Local with SBO*** set as `Enabled`.

Default: `Local`

Range: `Disabled, Local, Local + Remote, Opto + Local, Opto+Rem+Local`

HMI Close

This setting is available when the remote mode is enabled with local mode. This is either `Local+Remote` or `Opto +Rem+local` set at ***Control by*** setting.

When ***HMI Close*** setting is configured as `Operate`, the breaker closing through the HMI is possible. When ***HMI Close*** setting is set as `No Operate`, the breaker closing through the HMI is not possible.

Close Pulse Time

This setting defines the duration of the close pulse, which the CB should close when a close command is issued.

> *Note:*
> *This timer is a Pulse timer.*

Trip Pulse Time

This setting defines the duration of the trip pulse, which the CB should trip when a manual or protection trip command is issued.

> *Note:*
> *This timer is a Pulse timer.*

Man Close Delay

This setting defines the delay time before the close pulse is executed.

Healthy Time

This setting defines the time period in which a CB needs to indicate a healthy condition before it closes.

If the CB does not indicate a healthy condition in this time period following a close command, the IED will raise an alarm.

Sys Check Time

This setting sets a time delay for manual closure with System Check Synchronizing.

If the System Check Synchronizing criteria are not satisfied in this time period following a close command, the IED will produce an alarm.

Init Trip

This setting allows the configurating of a Flexlogic operand that when asserted will initiate the circuit breaker to open.

This setting is applicable only when ***Control by*** setting is set to either `Opto, Opto+local, Opto+Remote, Opto+Rem+local`.

Trip Command In

This setting allows the configurating of a Flexlogic operand that when asserted triggers the fixed Trip LED. It is mapped to the Trip Command. The default value of this setting is set to `Any Trip`.

Ext. Trip 3ph

The Flexlogic operand configured in this setting receives an external three-phase trip signal.

Init Close

This setting allows the configurating of a Flexlogic operand that when asserted will initiate the circuit breaker to close.

This setting is applicable only when ***Control by*** setting is set to either `Opto, Opto+local, Opto+Remote, Opto+Rem+local`.

Reset Close Dly

This setting allows the configurating of a Flexlogic operand that when asserted will reset the Manual CB Close Time Delay.

Healthy

This setting allows the configurating of a Flexlogic operand that indicates that the CB is healthy. A healthy condition is needed in order to close the breaker.

Man Check Synch

This signal can be mapped to an opto-input to allow the IED to receive a signal from built in system check functionality.

Trip/Close

This is a command (setting) to directly `Trip` or `Close` the breaker.

This setting is available for Local operation when ***Control by*** setting is set to either `Local, Local+Remote, Opto+Local, Opto+Rem+local` (HMI and front port).

This setting is available in all Protocols for Remote Operation when ***Control by*** setting is set either to `Remote, Local+Remote, Opto+Remote, Opto+Rem+local` (Rear port).

Interlock Open

A setting to be set in the setup software or via SCL File. It selects an operand that indicates the Breaker Interlock status for "Open/Off' command from an IEC 61850 client. When the operand value is set (***CBCILO1.EnaOpn.stVal: is set to fals***e), the "Open/Off" command form the IEC 61850 Client is rejected if the client set the interlock-check, but in the "Check" parameter of the control command.

Interlock Close

A setting to be set in the setup software or via SCL File. It selects an operand that indicates the Breaker Interlock status for "Close/On' command from an IEC 61850 client. When the operand value is set (***CBCILO1.EnaCls.stVal: is set to false***), the "Close/On" command form the IEC 61850 Client is rejected if the client set the interlock-check, but in the "Check" parameter of the control command.

Block Open

The assertion of the operand assigned to this setpoint prevents the breaker from opening/tripping.

Block Close

The assertion of the operand assigned to this setpoint prevents the breaker from closing.

BayLv 61850 Auth

This setting allows the selecting of an operand that indicates the Bay level authority status. The operand status is modelled in the IEC 61850 server using respective breakers CSWI Loc data object. The operand status is applied to control authority table to determine the control authority for different levels. It is an Edge driven function.

15.19 SWITCHES STATUS AND CONTROL

All Multilin Agile products support Switch Status and Control for up to 8 switchgear elements in an IEC 61850 substation. The device is able to monitor the status of and control up to eight switches. The type of switches that can be controlled are:

- Load Break switch
- Disconnector
- Earthing Switch
- High Speed Earthing Switch

Consider the following feeder bay:

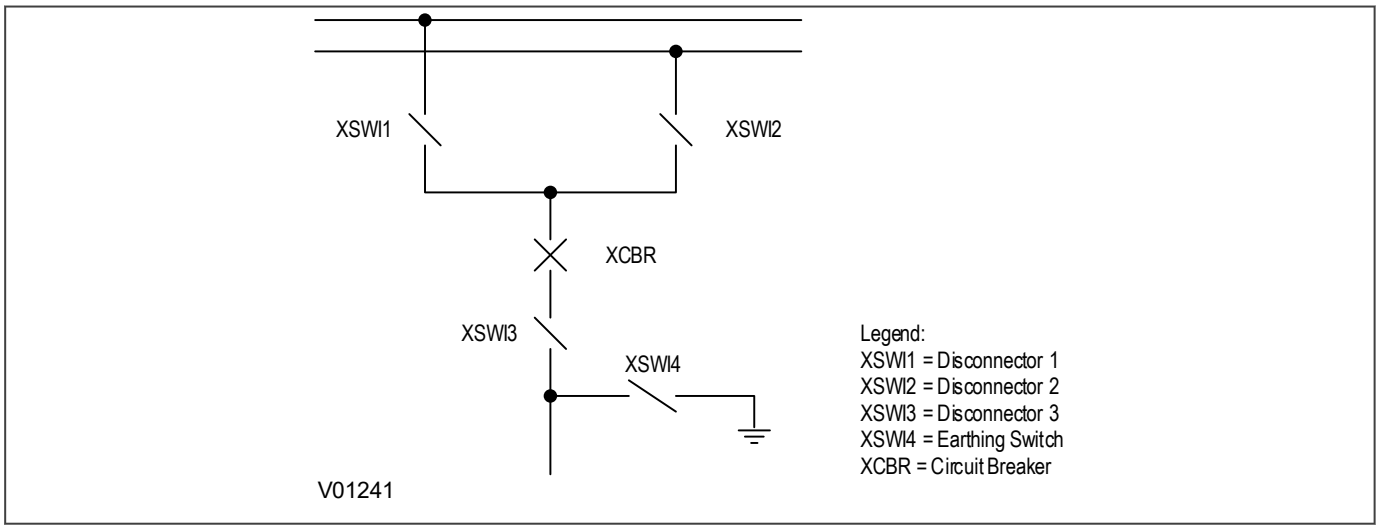

Figure 133: Representation of typical feeder bay

This bay shows four switches of the type LN XSWI and one circuit breaker of type LN XCBR. In this example, the switches XSWI1 – XSWI3 are disconnectors and XSWI4 is an earthing switch.

For the device to be able to control the switches, the switches must provide auxiliary contacts to indicate the switch status. For convenience, the device settings refer to the auxiliary contacts as 52A and 52B, even though they are not circuit breakers.

There are eight sets of ***SW(n) CONTROL*** settings in the *SWITCH CONTROL* menu at ***SETPOINTS\CONTROL***, which allows the user to set up the Switch control, one set for each switch where (n) is the number of the switch. These settings are as follows:

Type

This setting defines the type of switch. It can be a load breaking switch, a disconnector, an earthing switch or a high speed earthing switch.

Status Input

This setting defines the type of auxiliary contacts that will be used for the control logic. For convenience, the device settings refer to the auxiliary contacts as 52A and 52B, even though they are not circuit breakers. "A" contacts match the status of the primary contacts, whilst "B" contacts are of the opposite polarity.

Control by

This setting determines how the switch is to be controlled. This can be Local (using the device directly), Remote (using a remote communications link), or both (Local+Remote).

Trip/Close

This is a command to directly trip or close the switch.

Remote Switch control can be achieved by setting the ***CB Trip/Close*** to trip or close by using a command over a communication link.

For this to work, the ***Control by*** setting should be set to `Remote` or `Local+Remote` in the ***SW(n) CONTROL*** menu for each switch.

Local Switch control can be achieved by setting the ***CB Trip/Close*** to trip or close by using a command over the IEDs front panel or USB communications.

For this to work, the ***Control by*** setting should be set to `Local` or `Local+Remote` in the ***SW(n) CONTROL*** menu for each switch.

The `SWI(n) Control Trp` and `SWI(n) Control Cls` logic operands are the outcome of the Trip and Close commands. This logic operand can be assigned to relay output contacts to physically operate the switches.

SWI1 Aux (52A) and ***SWI1 Aux (52B)***

This setting defines the signals that provides the status of the associated auxiliary contacts for each switch.

Trip Pulse Time and ***Close Pulse Time***

These settings allow the user to control the width of the open and close pulses.

Status Alrm Time

This setting allows the user to define the duration of wait timer before the IED raises a status alarm.

Trip Alrm Time and ***Close Alrm Time***

These settings control the delay of the open and close alarms when the final switch status is not in line with expected status.

SWI1 Blk Rmt Ops

This setting blocks Switch Remote operation.

Reset Data

This setting resets the switch monitoring data.

> *Note:*
> *In order to detect SWI1 Cls Fail, Close Alrm Time must be less than Close Pulse Time.*

> *Note:*
> *In order to detect SWI1 Trip Fail, Trip Alarm Time must be less than Trip Pulse Time.*

The actual values SWI1 Status and SWI1 Operations provided by the Switch Control can be accessed at the ***DEVICE STATUS\SWITCH CONTROL*** path directly in the IEDs front panel, or through the ***Monitor*** tab in the EnerVista Configuration Software.

`SWI1 Status` represents the status of the switch.

`SWI1 Operations` increments its status based on the number of switch trips. This a value saved in Non-volatile memory that can be reset only using the ***Reset Data*** setting per each Switch.

> *Note:*
> *Settings for switch 1 are shown, but settings for all other switch elements are the same.*

15.19.1 SWITCH STATUS LOGIC

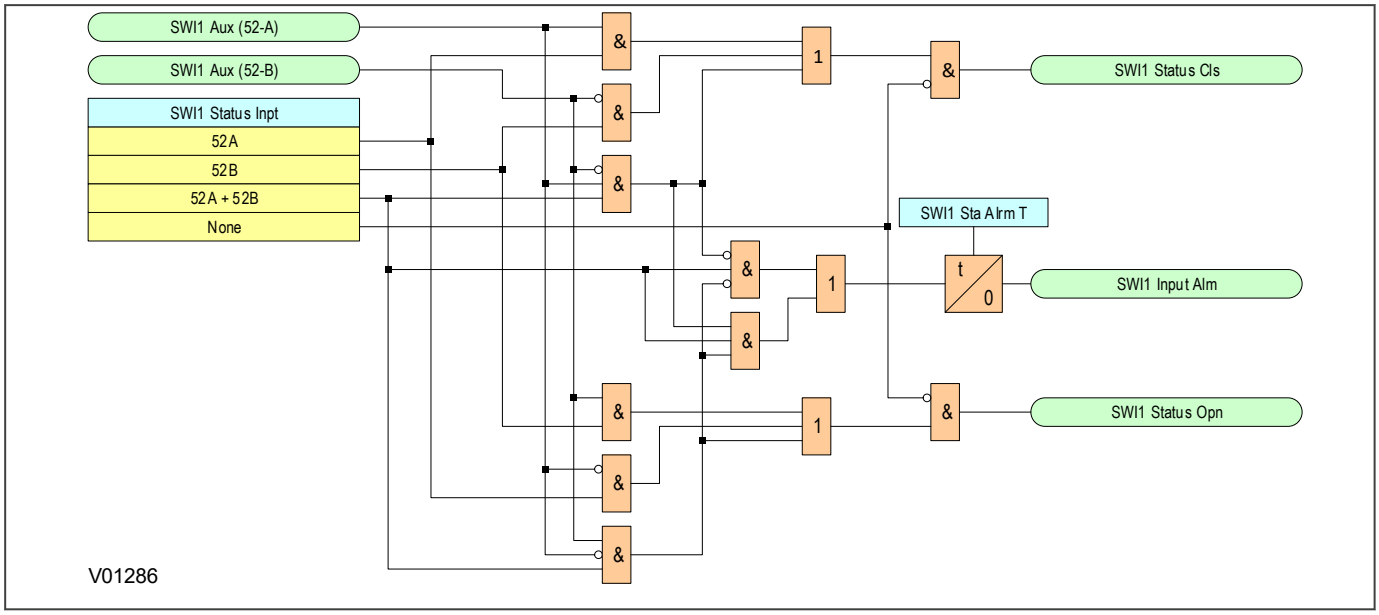

Figure 134: Switch status logic

15.19.2 SWITCH CONTROL LOGIC

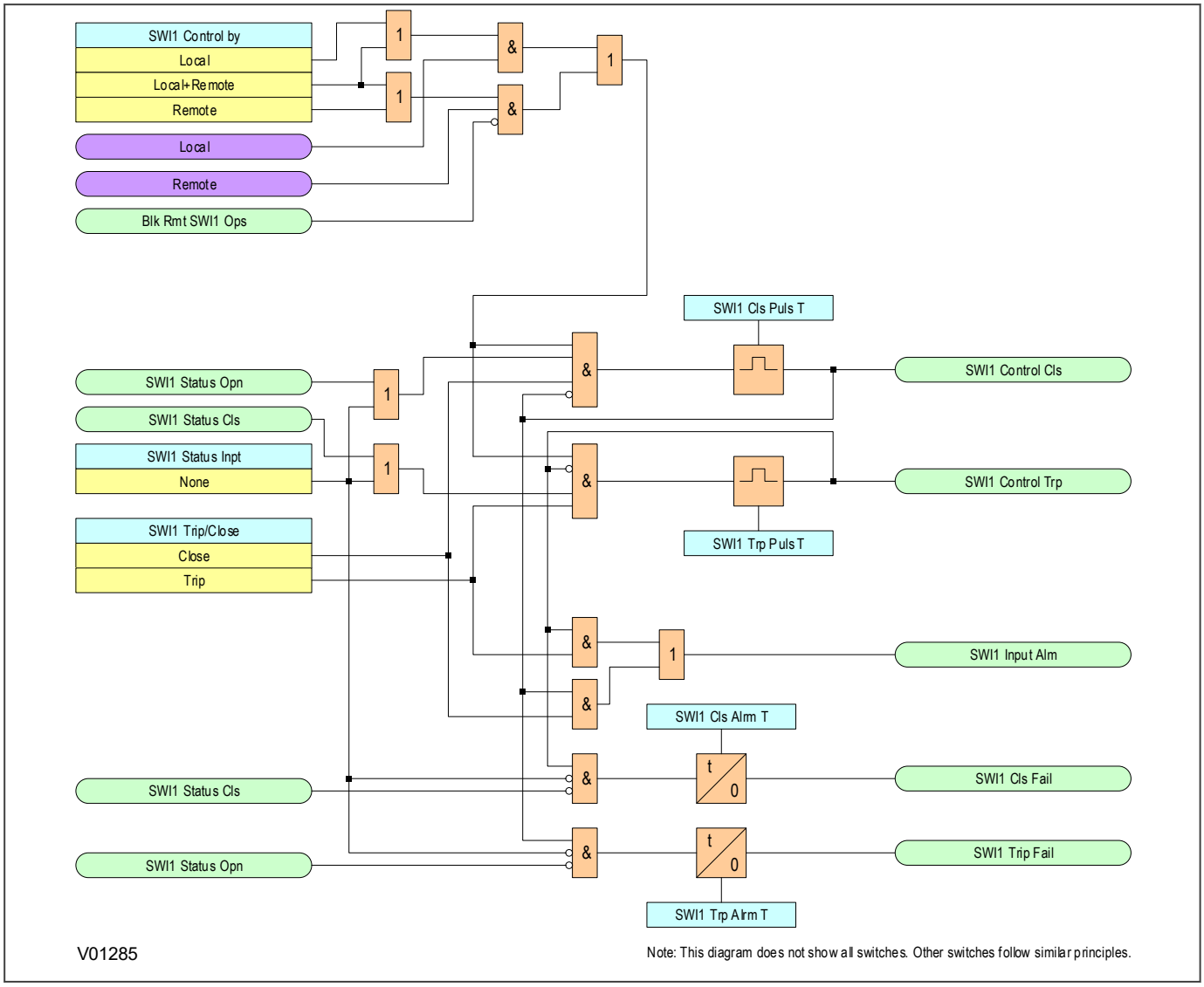

Figure 135: Switch control logic

15.20 POLE DEAD FUNCTION

The Pole Dead feature is used to determine and indicate that one or more phases of the line are not energised. A Pole Dead condition is determined either by measuring:

- the line currents and/or voltages, or
- by monitoring the status of the circuit breaker auxiliary contacts, as shown by dedicated signals.

This feature can also be used to block operation of underfrequency and undervoltage elements where applicable.

15.20.1 POLE DEAD LOGIC

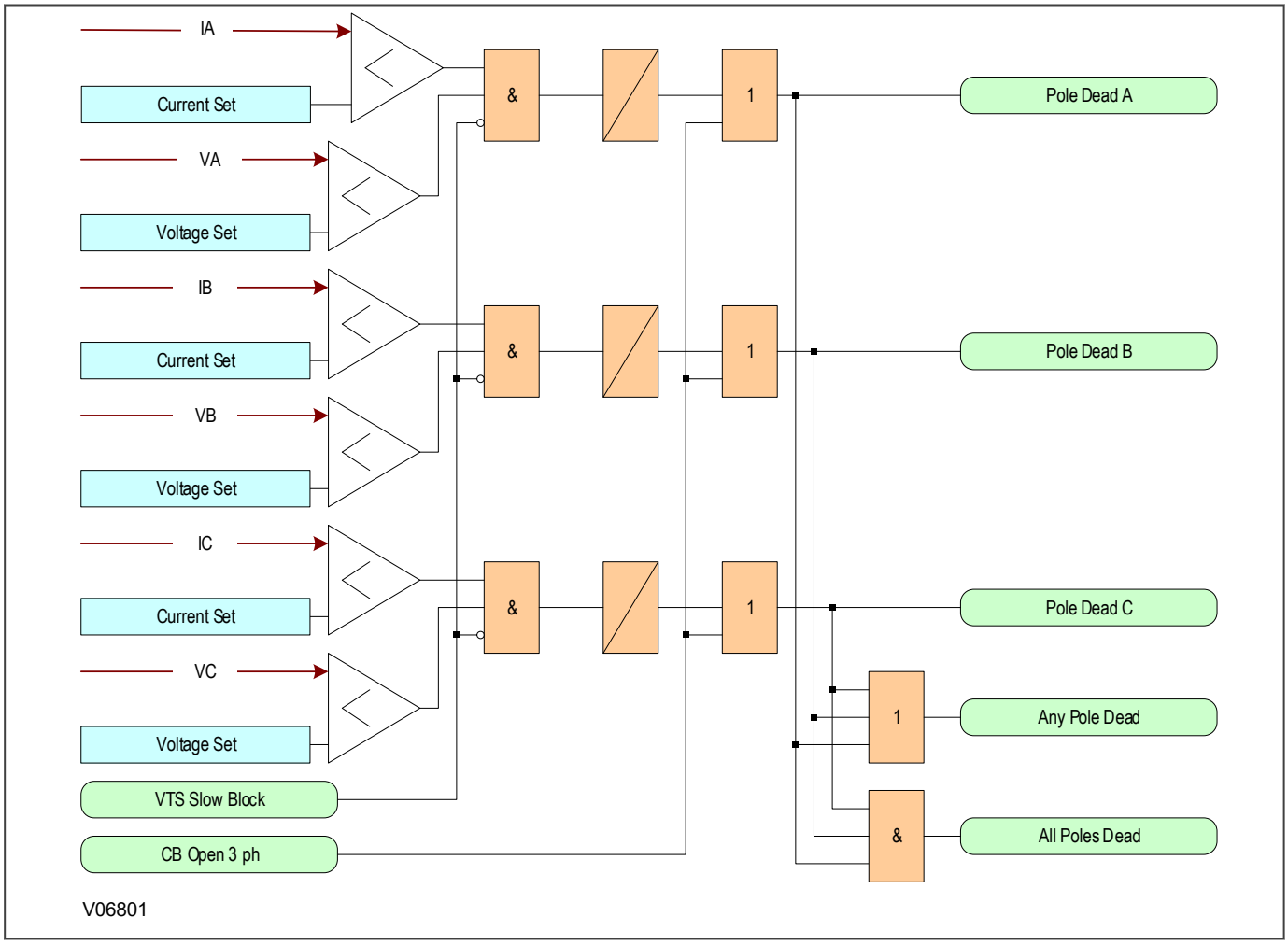

Figure 136: Pole dead logic

If both the line current and voltage fall below certain thresholds, the device will initiate a Pole Dead condition.

If one or more poles are dead, the device will indicate which phase is dead and will also assert the ***Any Pole Dead*** signal. If all phases are dead the ***Any Pole Dead*** signal would be accompanied by the ***All Poles Dead*** signal.

If a VT fails, a ***VTS*** signal is generated to block the Pole Dead indications that would be generated by the undervoltage and undercurrent thresholds. However, the VTS logic will not block the Pole Dead indications if they are initiated by a ***BRK Open*** signal. A ***BRK Open*** signal automatically initiates a Pole Dead condition regardless of the current and voltage measurement.

Note:
Pole dead functionality is only available in P14D & P14N products. Voltage settings will be applicable only for model P14D.

15.21 SYNCHROCHECK

In some situations it is possible for both "bus" and "line" sides of a circuit breaker to be live when a circuit breaker is open - for example at the ends of a feeder that has a power source at each end. Therefore, it is normally necessary to check that the network conditions on both sides are suitable, before closing the circuit breaker. This applies to both manual circuit breaker closing and autoreclosing. If a circuit breaker is closed when the line and bus voltages are both live, with a large phase angle, frequency or magnitude difference between them, the system could be subjected to an unacceptable shock, resulting in loss of stability, and possible damage to connected machines.

The Synchrocheck functionality involves monitoring the voltages on both sides of a circuit breaker, and if both sides are live, performing a synchronisation check to determine whether any differences in voltage magnitude, phase angle or frequency are within permitted limits.

The pre-closing system conditions for a given circuit breaker depend on the system configuration, and for autoreclosing, on the selected autoreclose program. For example, on a feeder with delayed autoreclosing, the circuit breakers at the two line ends are normally arranged to close at different times. The first line end to close usually has a live bus and a dead line immediately before reclosing. The second line end circuit breaker now sees a live bus and a live line.

If there is a parallel connection between the ends of the tripped feeder the frequencies will be the same, but any increased impedance could cause the phase angle between the two voltages to increase. Therefore just before closing the second circuit breaker, it may be necessary to perform a synchronisation check, to ensure that the phase angle between the two voltages has not increased to a level that would cause unacceptable shock to the system when the circuit breaker closes.

If there are no parallel interconnections between the ends of the tripped feeder, the two systems could lose synchronism altogether and the frequency at one end could "slip" relative to the other end. In this situation, the second line end would require a synchronism check comprising both phase angle and slip frequency checks.

If the second line-end busbar has no power source other than the feeder that has tripped; the circuit breaker will see a live line and dead bus assuming the first circuit breaker has re-closed. When the second line end circuit breaker closes the bus will charge from the live line (dead bus charge).

Note:
Synchrocheck functionality is only available in P14D & P94V products.

15.21.1 SYNCHROCHECK IMPLEMENTATION

Warning:
The synchrocheck cannot be performed if the three-phase VTs are Delta connected, and the Wye single voltage input is selected under “Aux VT connection”. “Wye” voltages cannot be calculated from Delta connected VTs. Also, if both Line and Bus sides are three-phase VTs, the VT types should be matching, i.e. either Line and Bus Volt inputs are both Delta type or both Wye type. If both sides are single phase Aux VT inputs, then both Aux VT connection types should match exactly, i.e. If Line side Aux VT type is Vab, then the Bus side Aux VT type must be Vab. Aux VT connection “Vn” is not a valid type for synchro-check.

Caution:
If the VT type on the line side and the bus side input don't match, as specified in the warning above, the synchrocheck function will not run, although function is set to Enabled.

Warning:
Once the synchrocheck function is programmed, it will perform a voltage input selection check, to determine that the voltage magnitudes are not different by more than 5% of each other. This check depends only on the settings entered for phase and auxiliary VTs under Setpoints/System/Voltage Sensing menu. If the difference between both of the selected voltage inputs by calculation is bigger than 5%, the synchrocheck will not work.

Warning:
For example, the phase VT can be set to Wye connection with a secondary voltage of 66.4V. The Aux. VT can be connected between phase A to B with a secondary voltage set to 115V. Then, one of the synchrocheck inputs can be set as the Wye connected Phase voltage bank, and the other input can be the Aux. VT with voltage Vab. As the difference between the computed Vab input and the Aux VT setting is 0%, the synchrocheck will work. However, if this difference is bigger than 5%, the synchrocheck will not work.

The Synchrocheck function provides *Live/Dead Voltage Monitoring* and *Check Synchronisation*.

The System Checks function is enabled or disabled under the path ***SETPOINTS\CONTROL\CHECK SYNC 1*** using the ***CS1 Function*** setting.

15.21.1.1 VT CONNECTIONS

The device provides inputs for a three-phase "Main VT" and at least one single-phase VT for check synchronisation or residual voltage. Depending on the primary system arrangement, the Main VT may be located on either the line-side of the busbar-side of the circuit breaker, with the 4th VT on the other. Normally, the Main VT is located on the line-side (as per the default setting), but this is not always the case. For this reason, the ***Line VT I/P*** is provided where you can define this. This is the main ***Bus VT I/P*** setting.

The ***Bus VT I/P*** setting is provided to define the Bus VT Location.

15.21.1.2 VOLTAGE MONITORING

The settings ***Bus Live V*** and ***Line Live V*** allow you to define the threshold at which a voltage is considered live, and a threshold at which the voltage is considered dead. These thresholds apply to both line and bus sides. If the measured voltage falls below the ***Bus Dead V*** or ***Line Dead V*** setting, a signal is generated (***Dead Bus***, or ***Dead Line***). If the measured voltage exceeds the ***Bus Live V*** or ***Line Live V*** setting, a signal is generated (***Live Bus***, or ***Live Line***).

15.21.1.3 CHECK SYNCHRONISATION

Synchrocheck verifies that the voltages (BUS and LINE) on the two sides of the supervised circuit breaker are within set limits of magnitude, angle and frequency differences. The time that the two voltages remain within the admissible angle difference is determined by the setting of the phase angle difference ΔΦ and the frequency difference ΔF (slip frequency).

This can be defined as the time it would take the voltage phasor, BUS or LINE, to traverse an angle equal to 2 × ΔΦ at a frequency equal to the frequency difference ΔF. This time can be calculated by:

$$T = \frac{1}{\frac{360°}{2 \times \Delta\Phi} \times \Delta F}$$

where: ΔΦ = phase angle difference in degrees; ΔF = frequency difference in Hz.

Example: for the values of ΔΦ = 30° and ΔF = 0.1 Hz, the time while the angle between the two voltages will be less than the set value is:

$$T = \frac{1}{\frac{360}{2 \times 30} \times 0.1} = 1.66\,\text{sec}$$

Therefore the breaker closing time must be less than than this computed time, in terms to successfully close and connect both energized sides.

If one or both sides of the synchronising breaker are de-energized, the synchrocheck programming can allow for closing of the circuit breaker using undervoltage control to by-pass the synchrocheck measurements (dead source function).

15.21.1.4 SYNCHRO CHECK LOGIC

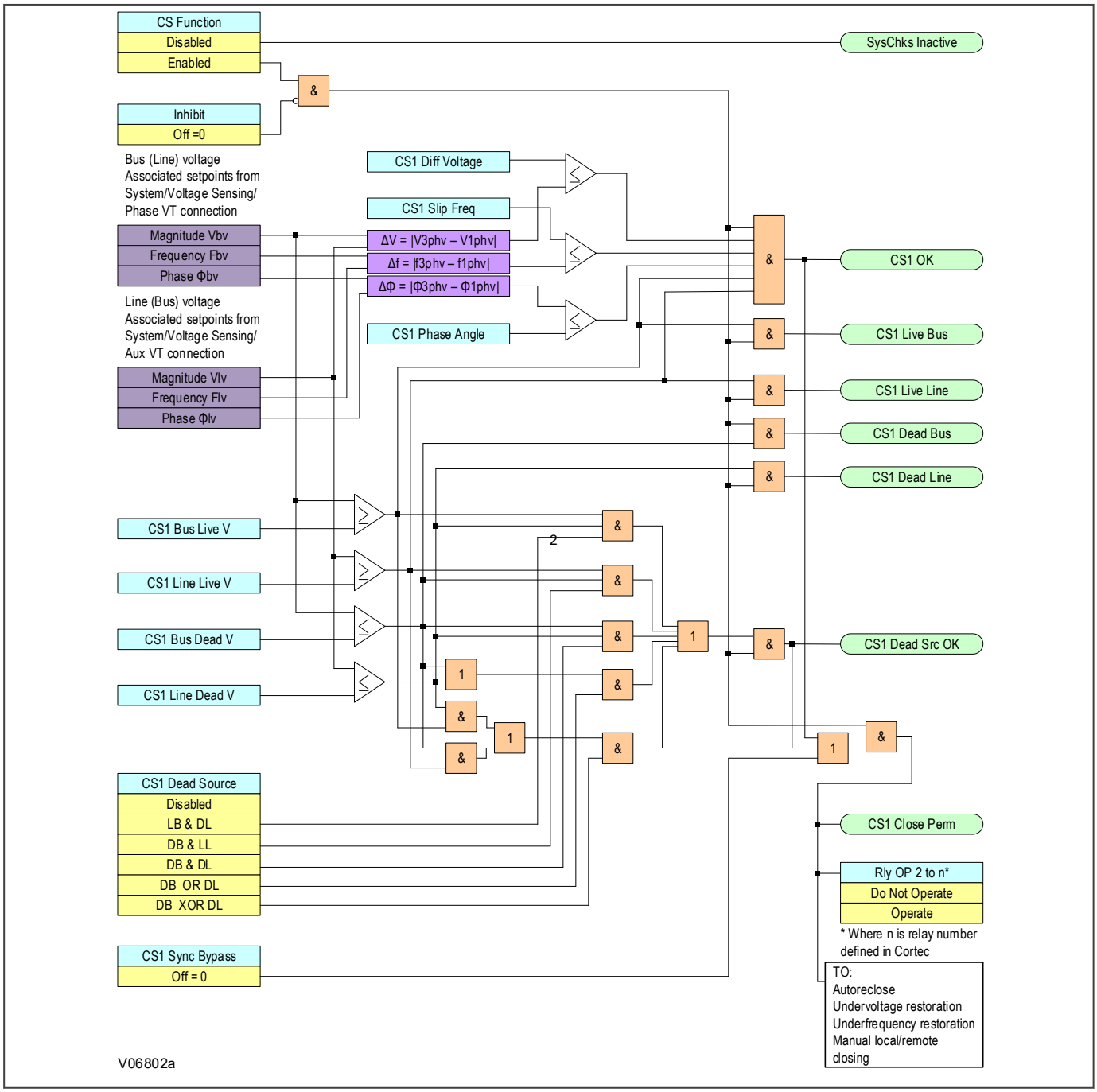

Figure 137: Synchro check logic

15.21.1.5 SYSTEM CHECK FLEXLOGIC EQUATION EDITOR

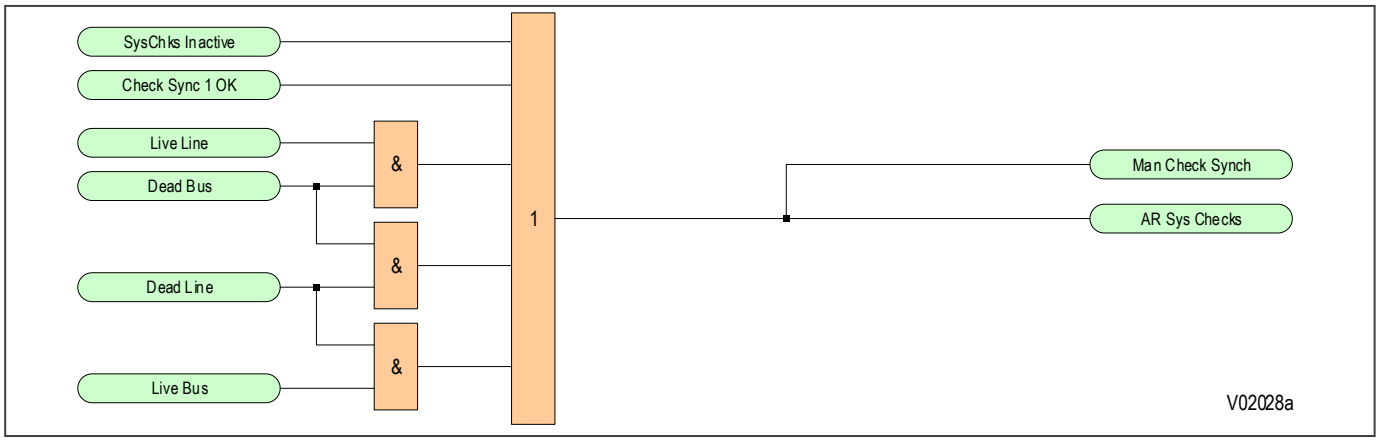

Figure 138: System check flexlogic equation editor

15.22 HARMONIC DETECTION

The Harmonic Detection function monitors the 2nd harmonic, which is present in the phase currents. The IED provides four identical Harmonic Detection elements.

During transformer energization or motor starts, the inrush current present in phase currents can impact some sensitive elements, such as negative sequence overcurrent. Therefore, the ratio of the second harmonic to the fundamental magnitude per phase is monitored, while exceeding the settable pickup level, an operand is asserted, which can be used to block such sensitive elements. The harmonics are updated every protection pass.

This function defines the phases required for operation like `Any One, Any Two, Any Three` or `Average`. This phase definition can be done at the ***Operate Mode*** setting at ***SETPOINTS\MONITORING\HARMONIC DETEC***. If set to `Average`, the IED calculates the average level of the 2nd harmonic and compares this level against the pickup setting. Averaging of the 2nd harmonic follows an adaptive algorithm depending on the fundamental current magnitude per-phase. If the fundamental magnitude on any of the three phases goes below the current cut-off level, the 2nd harmonic current from that phase is dropped (zeroed) from the equation for averaging, and the divider is decreased from 3 to 2. The same happens if the magnitude of the fundamental magnitude on one of remaining two phases drops below the cut-off level. In this case the 2nd harmonic on this phase is dropped from summation, and the divider is decreased to 1.

Imin setting at ***SETPOINTS\MONITORING\HARMONIC DETEC*** sets the minimum value of current required to allow the Harmonic Detection element to operate. If ***Operate Mode*** is set to `Average`, the average of three-phase currents is used for supervision. A similar adaptive average algorithm is applied to calculate the average of operation current magnitude.

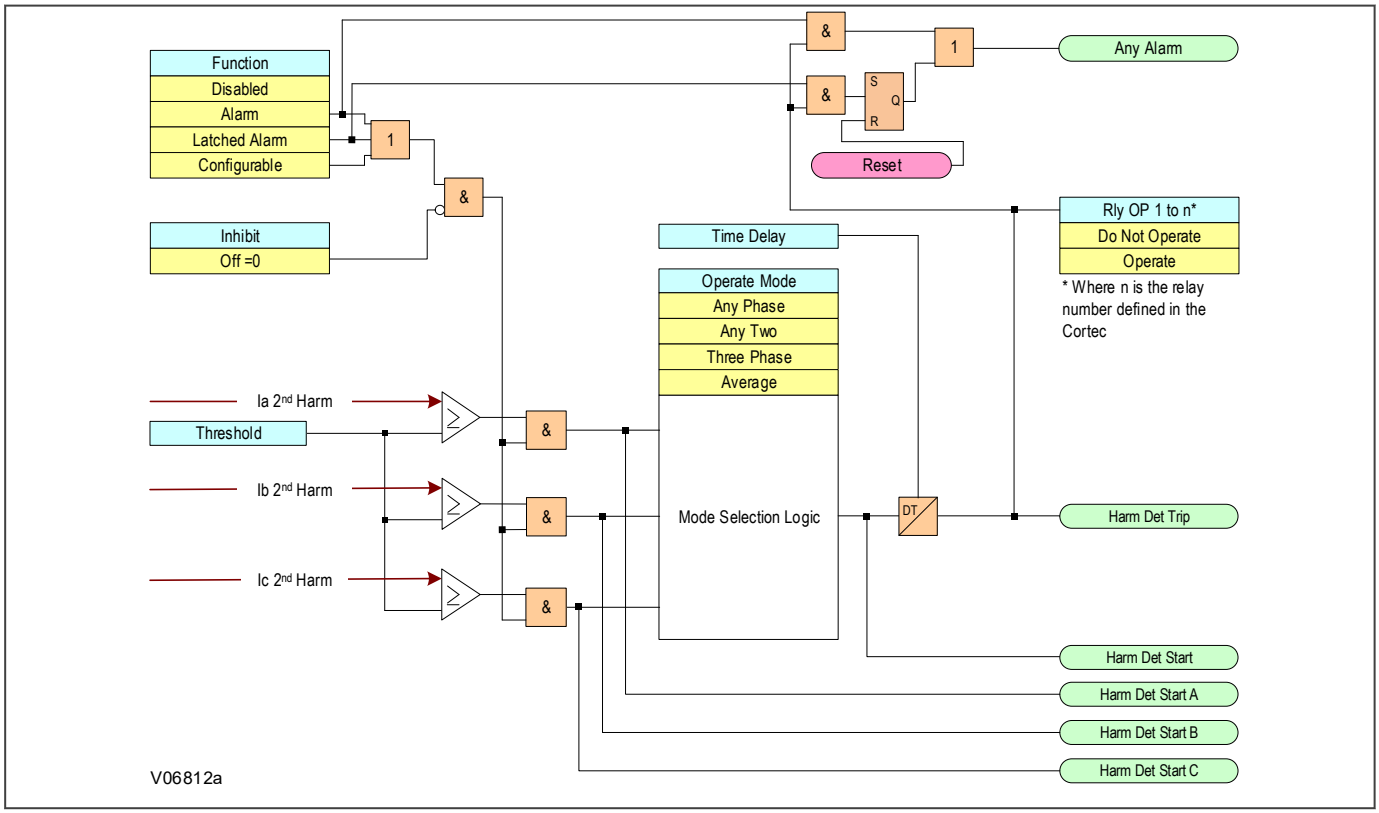

Figure 139: Harmonic detection logic

> *Note:*
> *Harmonic Detection functionality is only available in P14D & P14N products.*

Note:
*Take into account that Harmonic Detection signals can be used to block sensitive elements. In order to get proper functionality, the **Threshold** setting in the Harmonic Detection element should be programmed with values higher enough to allow measurement oscillation over the accuracy level. **Time Delay** setting should be higher enough to avoid transients in metering, and lower than the time delay of the IOC or TOC element being supervised by it.*

15.23 POLE DISCREPANCY

The Multilin Agile Enhanced IED provides a Pole Discrepancy element under Control menu at ***SETPOINTS \CONTROL\POLEDISCREPANCY\POLEDISCREPANCY1*** path. This element can be used for re-tripping the breaker after pole discrepancy detection or tripping upstream breaker in cases when the pole discrepancy still persists. The element detects if one or two of the breaker poles remain open following close command, or if one or two of the poles remain closed following open command. The Pole Discrepancy function operates based on either information from auxiliary contacts associated with the open/close status of each pole of the breaker, or by detecting the presence of phase currents above/below programmable current limit level upon breaker close or open operation respectively. To detect pole discrepancy using phase currents, the setting ***Current Limit*** must be programmed. By monitoring each phase current with respect to the selected Current Limit threshold, the IED detects whether the breaker pole is open or closed. If the phase current is detected below the current limit, the pole will be declared open, and if the current is above that limit, the pole will be declared closed.

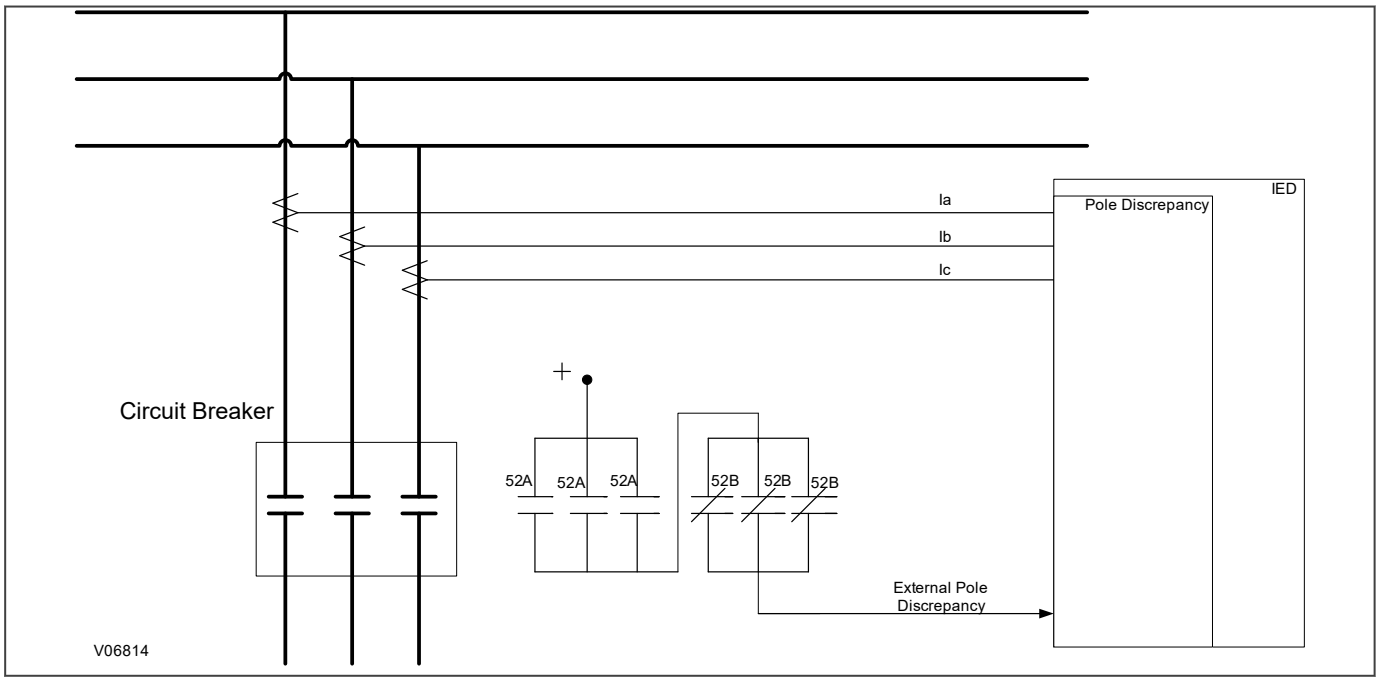

Figure 140: Breaker contacts arrangement for detecting pole discrepancy externally

The implemented pole discrepancy logic from a Multilin Agile IED allows either detection of pole discrepancy externally using single contact input (see figure, above), Aux Status Based detection using 6 input contacts from 52a and 52B auxiliary breaker contacts per-phase (see figure, below), currents based detection, any combination of the three detection methods, or all three methods enabled.

The pole discrepancy scheme from a Multilin Agile IED allows two types of breaker contacts wiring: The figure above shows wiring of the breaker pole discrepancy signal detected externally. In such schemes the three 52A contacts are paralleled and connected in series with the three paralleled 52B contacts. If the External Pole Discrepancy input turns ON, this would indicate either any of the 52B contacts did not open after breaker close command, or any of the 52A contacts remained closed after breaker trip command.

The figure below shows the connection of breaker 52A and 52B auxiliary contacts per breaker pole, and their wiring to the IED Opto Inputs. This wiring of the breaker contacts to the IED is used when the contacts based method for pole discrepancy detection is enabled on the IED.

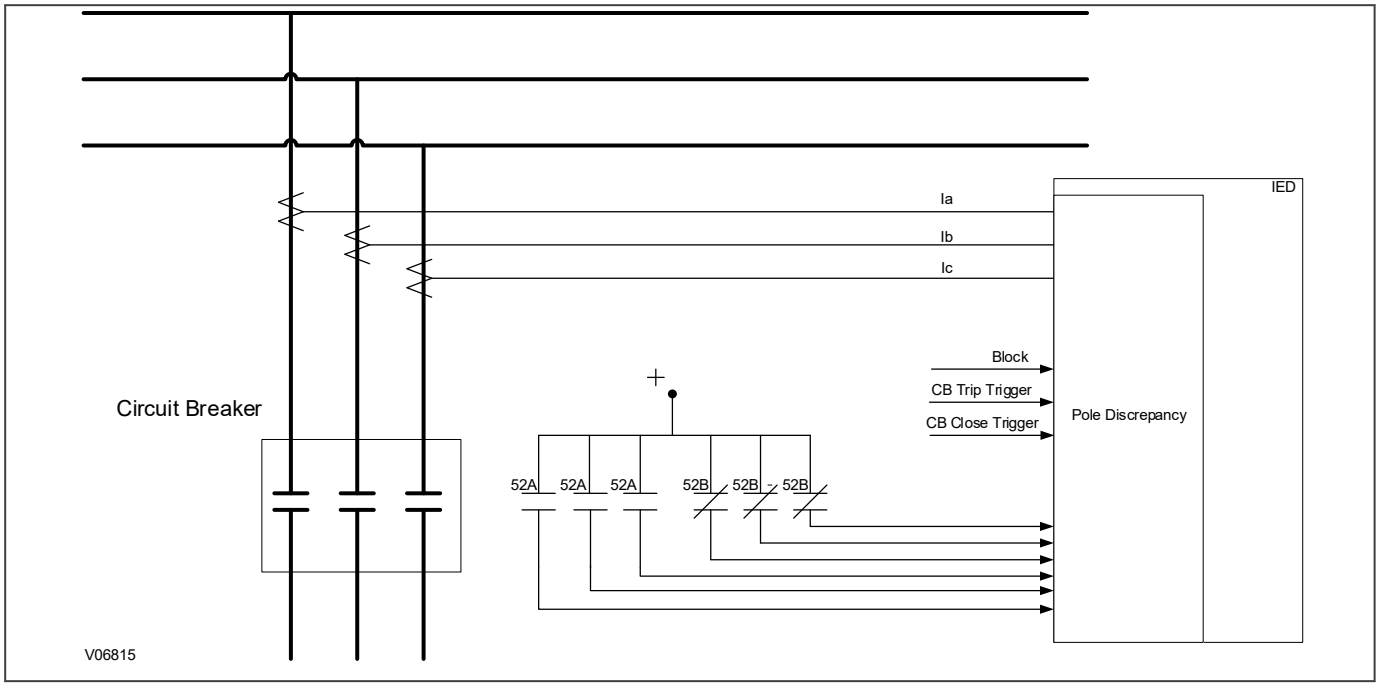

Figure 141: Breaker contacts wiring for pole discrepancy detected by the IED

CB Trip Trigger setting assigns the CB trip (open) initiation signal. ***CB Close Trigger*** setting assigns the breaker close initiation signal. The ***Ext Pole Discrp***. setting selects an operand (typically opto input) as an input from pole discrepancy detected externally by arranging the breaker auxiliary contacts.

Time Delay setting provides the definite time pickup delay. If, during a breaker open action, all three poles are detected open before the timer expires, the timer resets and no pole discrepancy is declared. If, however, one or two of the poles remain closed after the timer expires, pole discrepancy is declared. The same logic applies when a close command is sent to the breaker, by monitoring the closed status of the breaker poles.

> *Note:*
> *Even though the minimum **Time Delay** setting of 100 ms from the range serves most breakers with shorter operating times, ensure that the breaker operating times are checked, and set the delay to be longer than these times.*

Aux Status Based setting enables the ***Ph A(B,C) Open*** and ***Ph A(B,C) Closed*** settings associated with Aux Status Based PD detection. ***Ph A(B,C) Open*** setting provides selection of the operand per phase (pole) to detect the Open status of the breaker phase (pole). Normally, selection of the contact input wired to the pole auxiliary contact 52B is selected. ***Ph A(B,C) Closed*** setting provides selection of operand per phase (pole) to detect the Closed status of this breaker phase (pole). Normally, selection of the contact input wired to the pole auxiliary contact 52A is selected. These ***Ph A(B,C) Open*** and ***Ph A(B,C) Closed*** settings apply only if ***Aux Status Based*** setting is set to `Enabled`.

> *Note:*
> *To get proper functionality when using auxiliary contacts as detection criteria, the primary contacts must be fully synchronized with the auxiliary contacts of the monitored switching element. This means primary contacts and auxiliary contacts need to switch simultaneously.*

The ***Current Based*** setting enables the ***Current Limit*** setting, associated with current-based PD detection. The ***Current Limit*** setting sets the threshold for the measured phase currents per breaker pole, above which, the pole is considered closed, and below which, the pole is detected open.

The Pole Discrepancy element will be blocked when the operand selected in the ***Inhibit*** setting is asserted.

Note:
It is advisable to block the Pole Discrepancy element during single-pole breaker reclosing, as the status of the three breaker poles would create conditions for pole discordance operation.

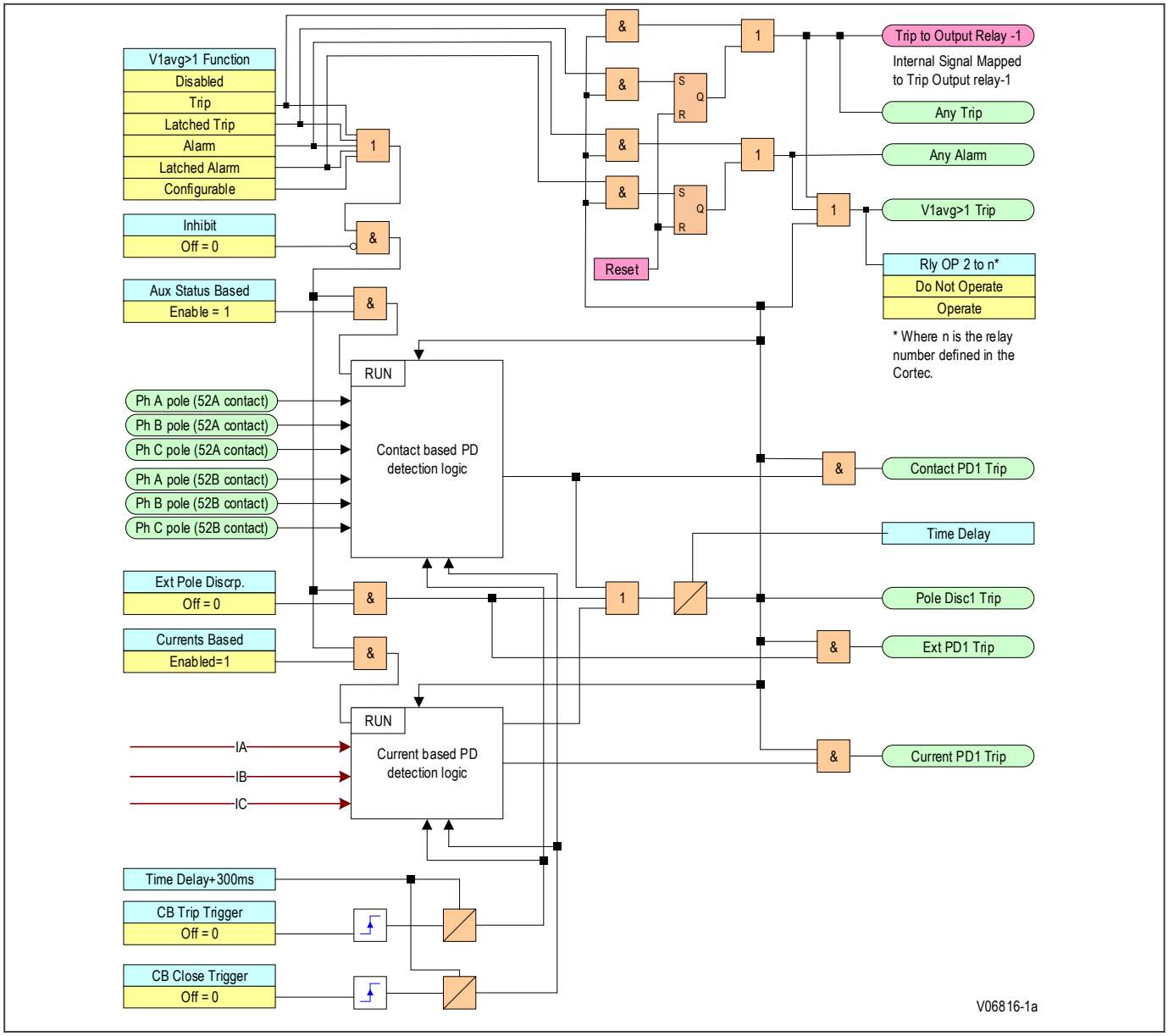

Figure 142: Pole discrepancy detection main logic

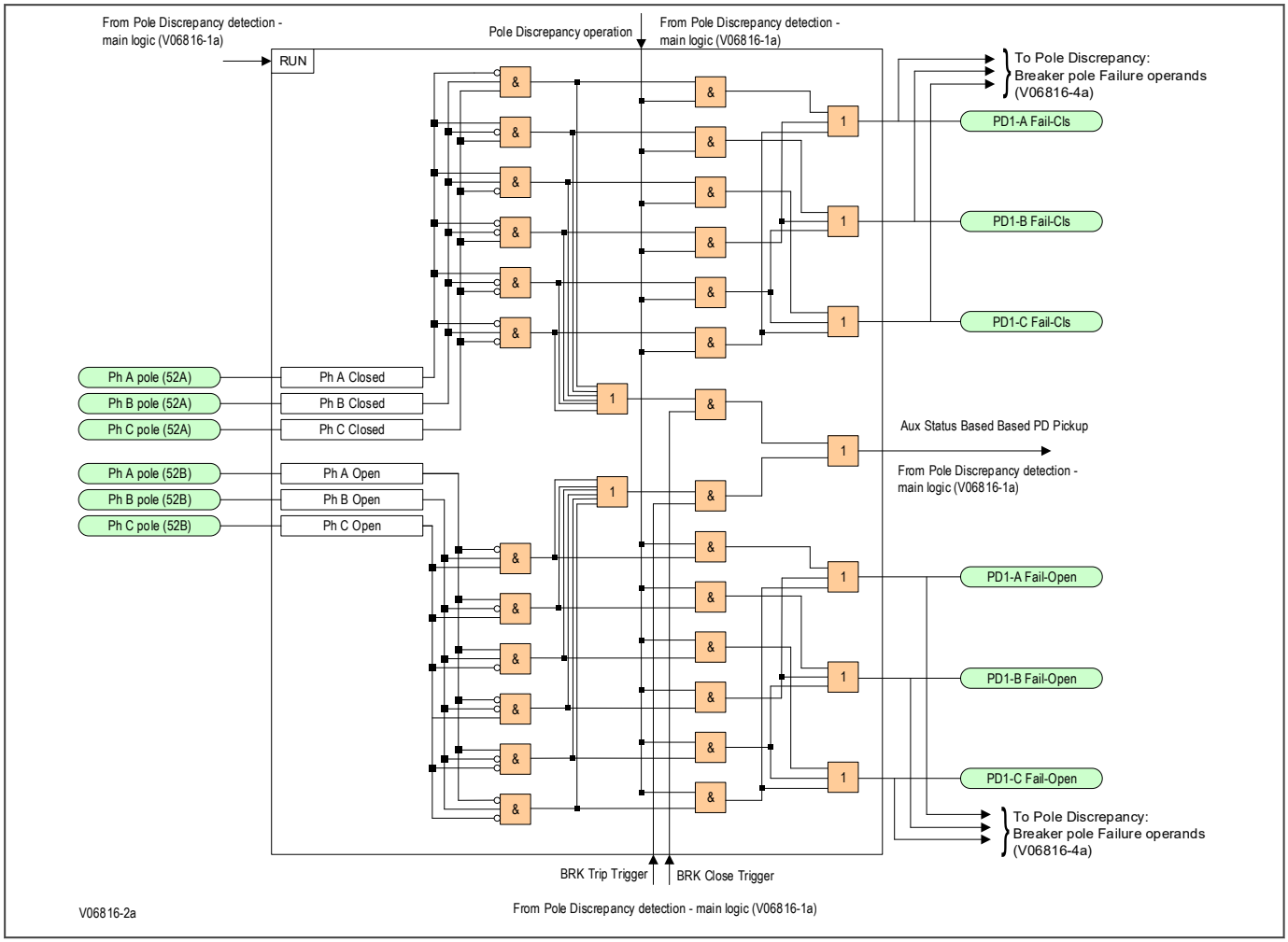

Figure 143: Auxiliary status based pole discrepancy detection logic

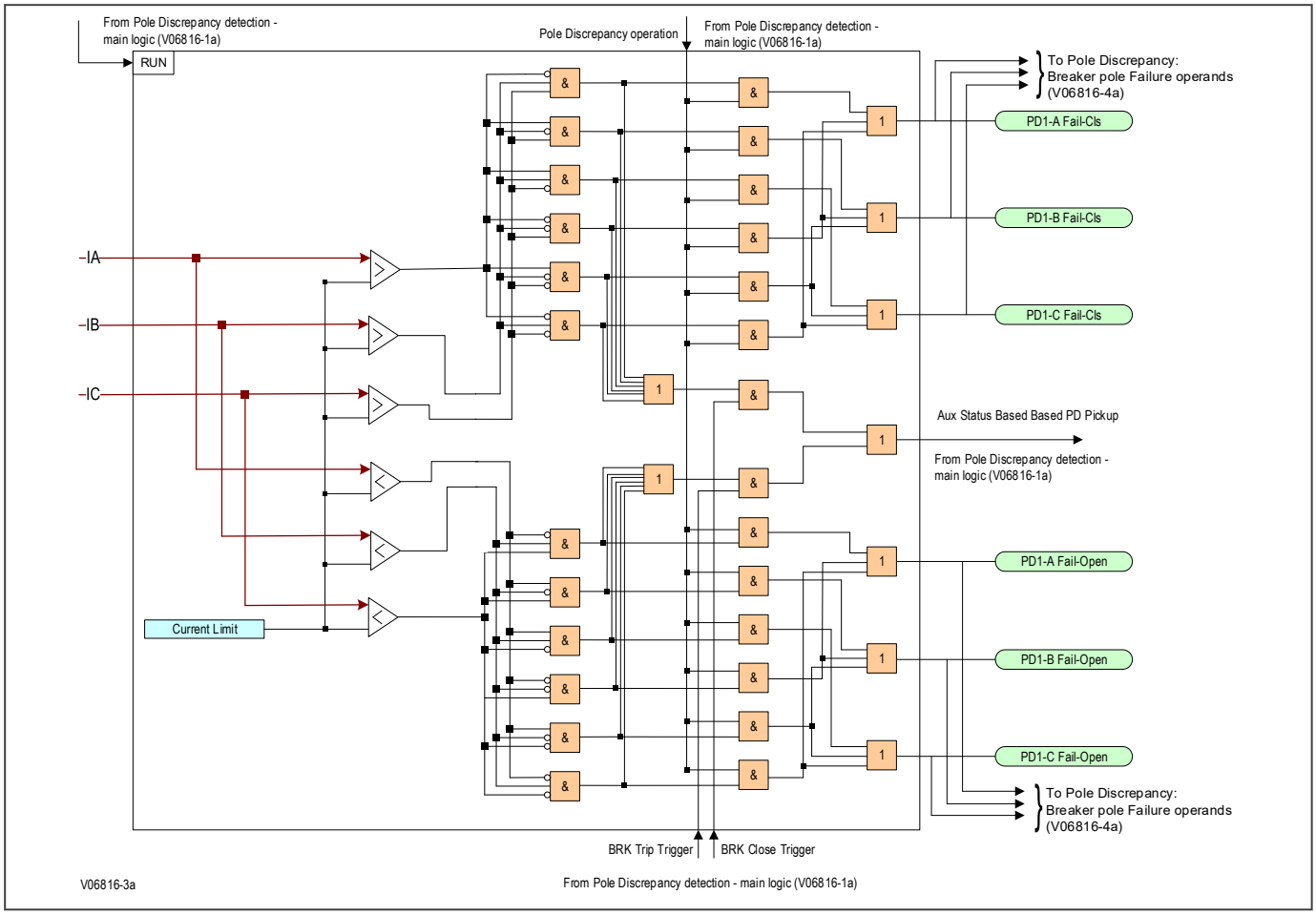

Figure 144: Current based pole discrepancy detection logic

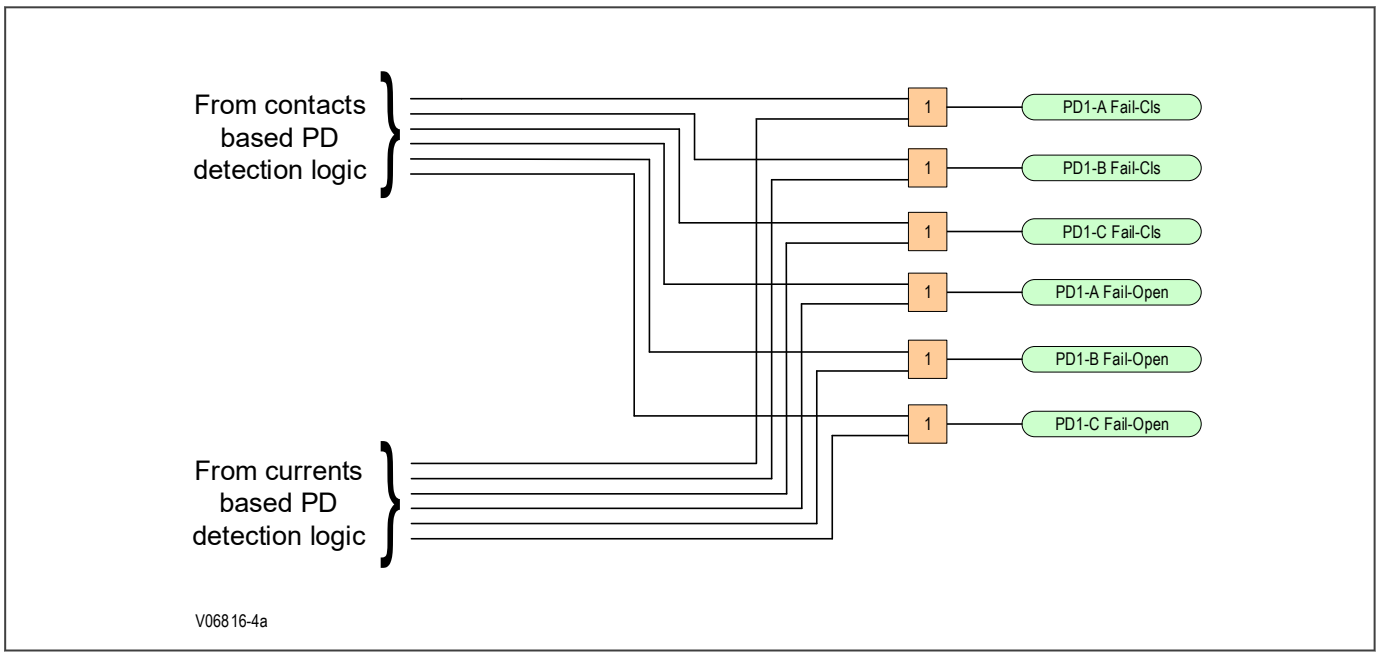

Figure 145: Pole discrepancy: breaker pole failure signal logic

Note:
Pole Discrepancy functionality is only available in P14D & P14N products.

15.24 DEMAND

15.24.1 CURRENT DEMAND

Current Demand is measured on each phase, and on three phases for real and reactive power. Setpoints allow the user to emulate some common electrical utility demand measuring techniques for statistical or control purposes.

The IED can be set to calculate Demand using the following two methods:

1. ***Fixed Demand***: This calculates a linear average of the quantity (RMS current, real power, reactive power) over the programmed Demand time interval, starting daily at 00:00:00 (i.e. 12 am). The 1440 minutes per day is divided into the number of blocks as set by the programmed time interval. Each new value of demand becomes available at the end of each time interval.
2. ***Rolling Demand***: This calculates a linear average of the quantity (RMS current, real power, reactive power) over the programmed Demand time interval, in the same way as Fixed Interval. The value is updated every minute and indicates the Demand over the time interval just proceeding the time of update.

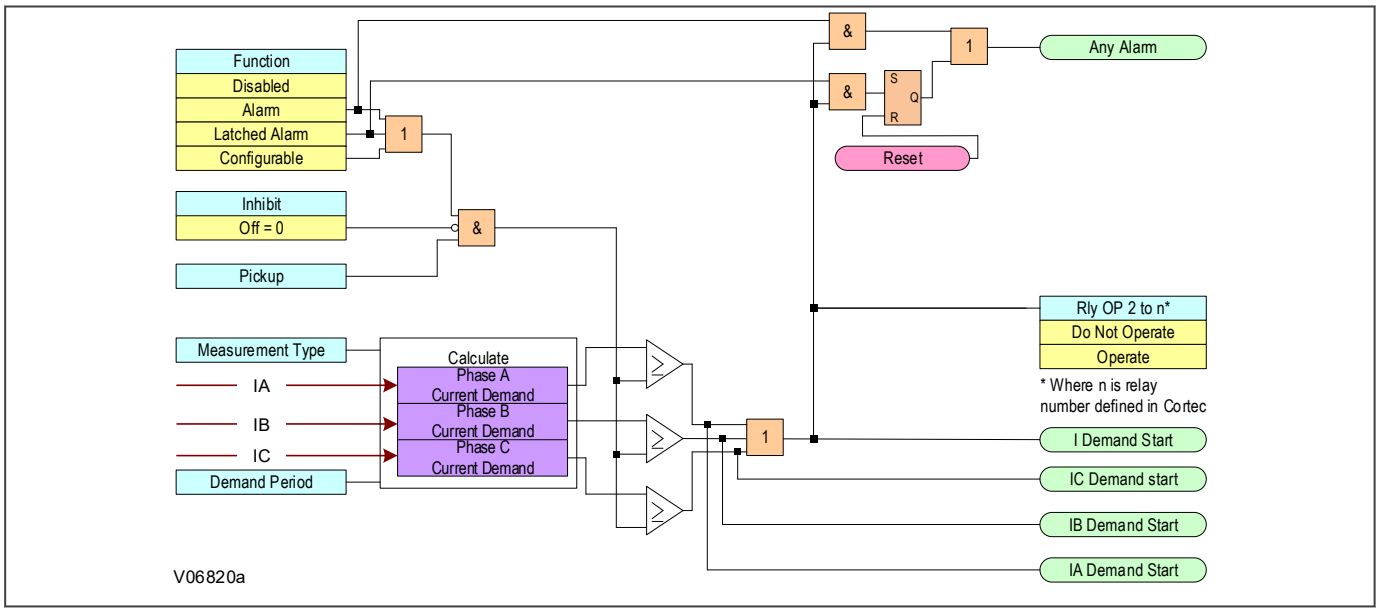

Figure 146: Current demand logic

15.24.2 ACTIVE POWER DEMAND

Active Demand is monitored by comparing it to a Pickup value. If the ***Active Demand Pickup*** is ever equaled or exceeded, the IED can be configured to cause an alarm or signal an output relay.

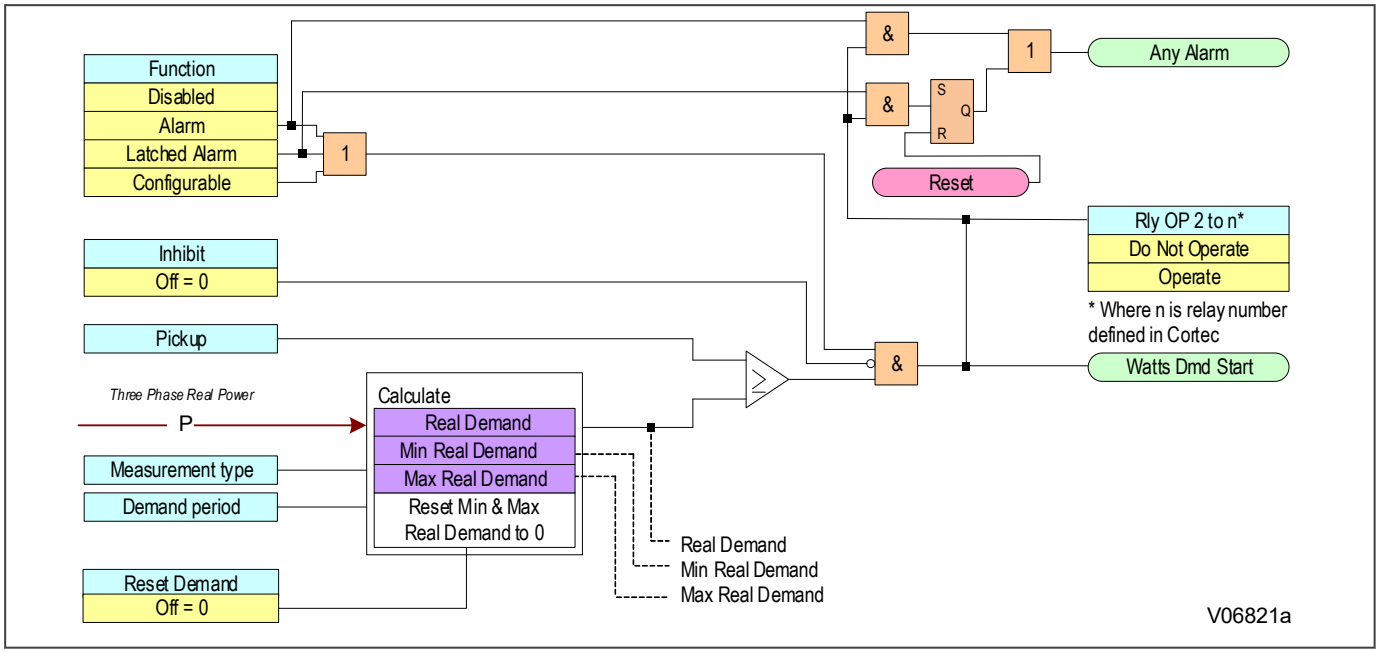

Figure 147: Active demand logic

15.24.3 REACTIVE POWER DEMAND

The ***Reactive Power Demand*** i monitored by comparing to a Pickup value. If the ***Reactive Power Demand Pickup*** is ever equaled or exceeded, the relay can be configured to cause an alarm or signal an output relay.

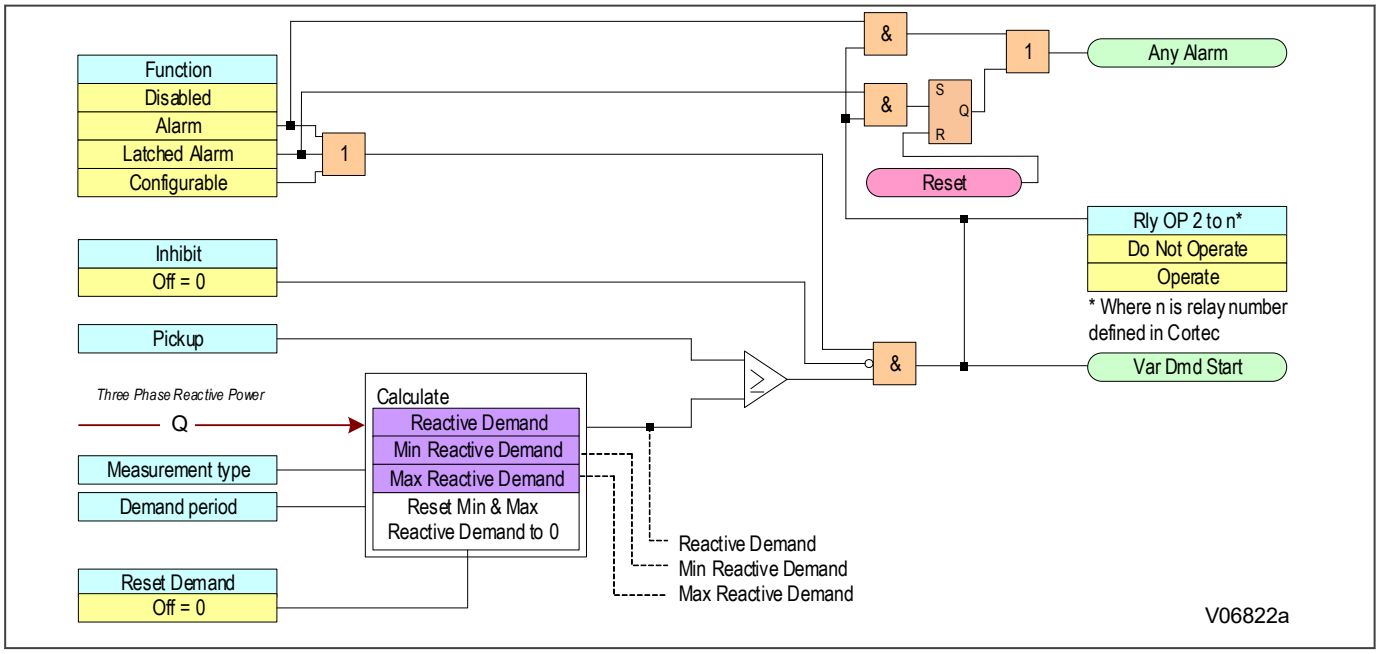

Figure 148: Reactive power demand logic

15.25 DIGITAL COUNTERS

The IED provides sixteen identical Digital Counters. A Digital Counter counts the number of state transitions from logic 0 to logic 1. The Digital Counters are numbered from 1 to 16. The counters are used to count operations such as the Pickups of an element, the changes of state of an external contact (e.g. breaker auxiliary switch), or the pulses from a watt-hour meter.

Preset sets the count to a required pre-set value before counting begins. This may be necessary where a substitute relay is to be installed in place of an in-service relay, or while the counter is running.

Compare sets the value to which the accumulated count value is compared. Three output operands are provided to indicate if the present value is more than (`HI`), equal to (`EQL`), or less than (`LO`), the set value.

Up selects the operand for incrementing the Counter. If an enabled ***Up*** input is received when the accumulated value is at the limit of +2147483647, the counter rolls over to -2147483648 and shows the alarm `Digital Counter 1 at Limit`.

Down selects the operand for decrementing the Counter. If an enabled ***Down*** input is received when the accumulated value is at the limit of +2147483647, the counter rolls over to -2147483648 and shows the alarm `Digital Counter 1 at Limit`.

Set To Pre-Set selects the operand used to set the counter to the pre-set value. The counter is set at pre-set value in the following situations:

- When the Counter is enabled and ***Digital Counter 1 Set to Pre-Set*** operand has value `1` (when the Counter is enabled and ***Digital Counter 1 Set to Pre-Set*** operand has value `0`, the Counter will be set to 0).
- When the Counter is running and ***Digital Counter 1 Set to Pre-Set*** operand changes the state from `0` to `1` (***Digital Counter 1 Set to Pre-Set*** changing from `1` to `0` while the Counter is running has no effect on the count).
- When a ***Reset*** or ***Reset/Freeze*** command is sent to the Counter and ***Digital Counter 1 Set to Pre-Set*** operand has the value `1` (when a reset or reset/freeze command is sent to the Counter and ***Digital Counter 1 Set to Pre-Set*** operand has the value `0`, the Counter will be set to 0).

Reset selects the operand for setting the count, either 0 or the pre-set value depending on the state of the Counter 1 Set to Pre-set operand.

Freeze/Reset selects the operand for freezing (capturing) the accumulating count value into a separate register with the associated date and time of the operation while resetting the count to either 0 or the pre-set value depending on the state of the ***Counter 1 Set to Pre-set*** operand.

Freeze/Count selects the operand for freezing (capturing) the accumulating count value into a separate register with the associated date and time of the operation while continuing to count. The present accumulated value and frozen (captured) value with the associated date/time stamp are available as `Status` values. If control power is interrupted, during the power-down operation, the accumulated and frozen (captured) values are saved into non-volatile memory.

15.26 LOSS OF COMMUNICATIONS

The device monitors activity on an interface via the configured protocol for this interface. The communications status is set for each protocol. If communications are lost, the enabled interface will issue a `Loss of Comms` event and operate a combination of output relays/states. With the ***Interface*** setting, only the protocols associated with the selected interface are shown on this screen as options. For example, if ***Ethernet*** is selected, the Ethernet protocols are available to monitor. The Ethernet protocols selection is defined as EthernetProtocolBitmask.

15.27 TRANSIENT EARTH FAULT DETECTION

Some distribution systems run completely insulated from earth. Such systems are called unearthed systems. The advantage of an unearthed system is that a single phase to earth fault does not cause an earth fault current to flow. This means the whole system remains operational and the supply is not interrupted. The system must be designed to withstand high transient and steady state over voltages, however, and so its use is generally restricted to low and medium voltage distribution systems.

When there is an earth fault in an unearthed 3-phase system, the voltage of the faulted phase is reduced to the earth potential. This causes the phase voltage in the other two phases to increase, which causes a significant charging current between the phase-to-earth capacitances. This can cause arcing at the fault location. Many systems use a Petersen coil to compensate for this, thus eliminating the arcing problem. Such systems are called compensated networks. The network is earthed with an inductive reactor, where its reactance is made nominally equal to the total system capacitance to earth. Under this condition, a single-phase earth fault does not result in any steady state earth fault current.

The introduction of a Petersen coil introduces major difficulties when it comes to determining the direction of the fault. This is because the faulted line current is the sum of the inductive current introduced by the Petersen coil and the capacitive current of the line, which are in anti-phase with each other. If they are equal in magnitude, the current in the faulted line is zero. If the inductive current is larger than capacitance current, the direction of the faulted line current will appear to be in the same direction as that of the healthy line.

Standard directionalising techniques used by conventional feeder protection devices are not adequate for this scenario, therefore, we need a different method for determining the direction of the fault. Two commonly used methods are the First Half Wave method and the Residual Active Power method.

First Half Wave Method

The initial transient wave, generated at the fault point travels towards the bus along the faulted line, until it reaches the healthy line. For forward faults the high frequency fault voltage and current components are in opposite directions during the first half wave, whereas for reverse faults, they are in phase. This fact can be used to determine the fault direction. This method, however, is subject to the following disadvantages:

- The time duration of the characteristic is very short, in most cases not more than 3ms. Because of this, it requires a high sampling frequency (3000Hz or even higher)
- It requires an analogue high pass filter, necessitating special hardware
- It is affected by the fault inception angle. For example, when the fault inception angle is 0°, there are no initial travelling waves

Residual Active Power Method

Residual Active power, which is sometimes used to detect the instance of a fault can also in some cases be used for detecting the fault direction. Although the capacitive currents can be compensated by an inductive current generated by a Petersen coil, the active (instantaneous) current can never be compensated for and this is still opposite to that of the healthy line. This fact can also be used to directionalise the fault.

For a forward directional fault, the zero-sequence active power is the power loss of Petersen's coil, which is negative. For a reverse fault, the zero-sequence active power is the power loss of the transmission line, which is positive. This method, however, is subject to the following disadvantages:

- The zero-sequence active power will be very small in magnitude for a reverse directional fault. Its value depends on the power loss of transmission line
- The zero-sequence active power may be too small in magnitude to be detected for a forward directional fault. Its value depends on the power loss of Petersen coil
- High resolution CTs are required

Due to the low magnitude of measured values, reliability is compromised.

This product does not use the above techniques for directionalisation. This product uses an innovative patented technique called Transient Reactive Power method to determine the fault direction of an earth fault in a compensated network.

> *Note:*
> *Transient Earth Fault Detection functionality is only available for P14DZ1 Cortec selection.*

15.27.1 TRANSIENT EARTH FAULT DETECTION IMPLEMENTATION

Transient Earth Fault Detector (TEF)

To establish if there is an earth fault somewhere on the system is straightforward. A simple residual overvoltage comparison can determine this. A ***TEF[X]> Start*** signal is produced by comparing the neutral voltage with a threshold voltage set by ***TEF[X] VN> Start*** setting. The difficulty comes with establishing the type of fault and its direction.

Transient Earth Fault Detector (TEF)

Transient Earth Fault Detection (TEFD) in this device comprises three modules:

- Transient Earth Fault Detection module (TEF)
- Fault Type Detector (FTD)
- Direction Detector (DD)

> *Note:*
> *Transient Earth Fault Detection functionality is implemented for 50 Hz only.*

Fault Type Detector (FTD)

The FTD uses a Fundamental analysis (FA) technique to establish whether the fault is an intermittent fault or a steady state fault. For Transient Earth Fault Detection, the detector counts the Residual Voltage bursts within a specified time window. With some clever signal processing the detector module creates pulses by comparing the bursts with a settable threshold, it then counts these pulses. If the number of pulses equals or exceeds the number specified by the ***TEF[X] FTD>Flt Cnt*** setting, within the time window specified by ***TEF[X] FTD>TimeWin***, the fault is deemed to be intermittent and the ***TEF[X]> Intermit*** Operand is asserted. If there are fewer pulses than this number, this indicates either a disturbance or a permanent fault. To establish which, we need to look at the RMS value of the residual voltage.

If there are fewer pulses than specified and the RMS value does not drop below setting within the specified time window, the fault is deemed to be permanent. In this case the ***TEF[X]> Steady*** Operand is asserted. If there are fewer pulses than specified and the RMS value does drop below setting, this indicates that a disturbance has been detected but it is not a fault. In this case the ***TEF[X]> Steady*** Operand is not asserted.

The inputs to the Fault Type Detector (FTD) are:

- The residual voltage
- ***TEF[X] FTD> VN*** (defines the threshold which converts the residual voltage burst into a pulse)
- ***TEF[X] FTD>TimeWin*** (defines the time window - default is 2 seconds)
- ***TEF[X] FTD>Flt Cnt*** (defines the fault count)

The FTD outputs two signals to indicate whether the fault is steady state ***(TEF[X]> Steady)*** or intermittent ***(TEF[X]> Intermit)***.

Direction Detector (DD)

The Direction Detector (DD) uses a patented technique based on Transient Reactive Power (TRP) to establish the direction of the fault. Unlike traditional methods, this TRP method does not require high resolution CTs or special analogue filtering hardware, and is therefore cheaper to implement.

It can be shown that the residual voltage and residual current components can be reliably used as discriminative criteria between a faulty and healthy feeder at 220Hz.

The admittance response of a healthy distributed feeder is shown below using a Pi model:

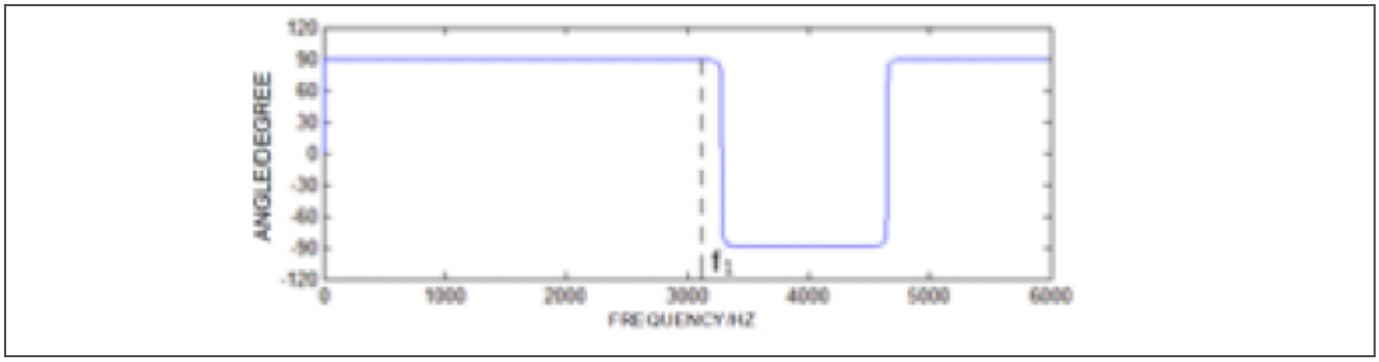

Figure 149: Healthy line response

In the above figure, the phase response of the admittance is consistent at 90° up to frequency f1 (approximately 3000Hz). For a compensated faulty feeder, the admittance response is shown below using a Pi model:

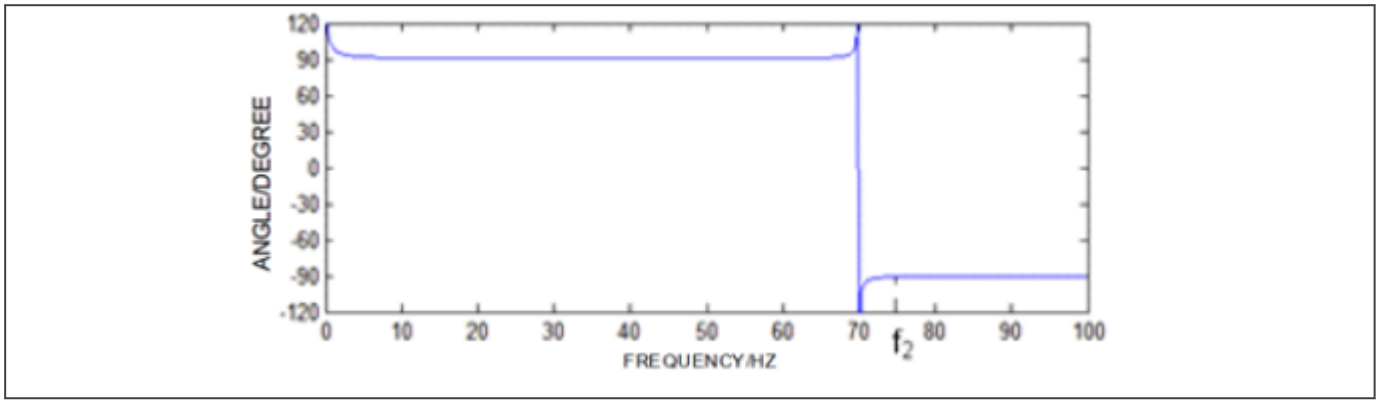

Figure 150: Faulty line response

We can observe that the phase angle (and thus, the reactive power flow) changes from 90° to -90° at frequencies higher than f2. Based on the above, we have clear direction discrimination between a healthy and faulted feeder at any frequency between f2 and f1 approximately.

> *Note:*
> *The resonant frequency in the above system is 70Hz. For a perfectly compensated system, this will be 50Hz.*

IEDs use an anti-aliasing band pass filter with cut-off frequency of 150Hz. Furthermore, at 220Hz the post-filter magnitude is approximately 0.5pu, and at 330Hz it is less than 0.2pu. To avoid any integer harmonics, and to avoid severely attenuated quantities due to the filter, we have chosen 220Hz as the most suitable frequency for direction determination.

In the forward direction, the residual voltage leads the residual current by 90°, and in the reverse direction the residual voltage lags the residual current by 90°. These criteria can be used to directionalise the fault.

The residual voltage (Vres) after passing through the bandpass filter tuned to 220 Hz, has 90° added to its phase. The residual current (Ires) is also passed through a 220 Hz bandpass filter, but no phase shift is applied.

After residual voltage and current signals pass through the band pass filter, VN becomes VN' due to a 90º shift:

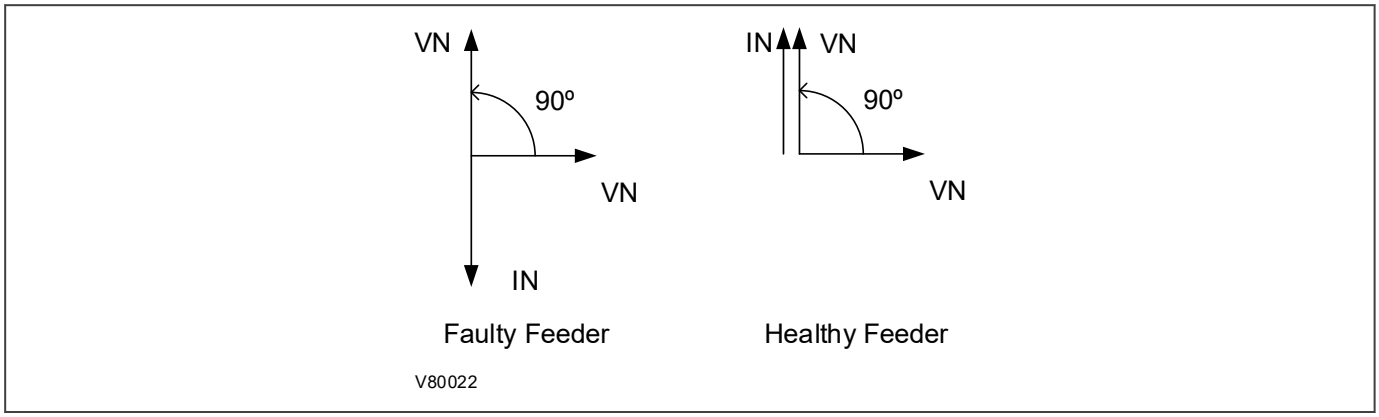

Figure 151: The relationship between VN and IN (VN phase shift)

As a healthy line is capacitive and a faulty line is inductive:

- If VN' and IN are in the opposite direction it means the feeder is faulty (forward) so transient reactive power is negative.
- If VN' and IN are in the same direction it means the feeder is healthy (reverse) so transient reactive power is positive.

Dynamic Thresholds

The Transient P and transient Q are calculated during fault conditions to help determine the fault direction.

The transient active power measurement is computed at nominal frequency. (P trans)

The transient reactive power measurement is computed at 220 Hz. (Q trans)

The maximum values of the Transient P and Q are stored during the fault's detection and are used for the calculation of the dynamic thresholds. After that, at every protection pass, the dynamic thresholds are updated as:

Q negative threshold = -***'TEF[X] Dir>Qf Set'*** + 0.1 * QtransMax

Q positive threshold = ***'TEF[X] Dir>Qr Set'*** + 0.1 * QtransMax

P negative threshold = -***'TEF[X] Dir>Qf Set'*** + 0.1 * PtransMax

P positive threshold = ***'TEF[X] Dir>Qr Set'*** + 0.1 * PtransMax

The P/Q threshold discriminates between the use of P transient and Q transient in the TEF algorithm. When the active power is higher than this threshold while the Q transient value is kept below it, the algorithm uses the P transient as the operate input, otherwise the Q transient value is used instead.

The next figure illustrates the reactive and active power selection:

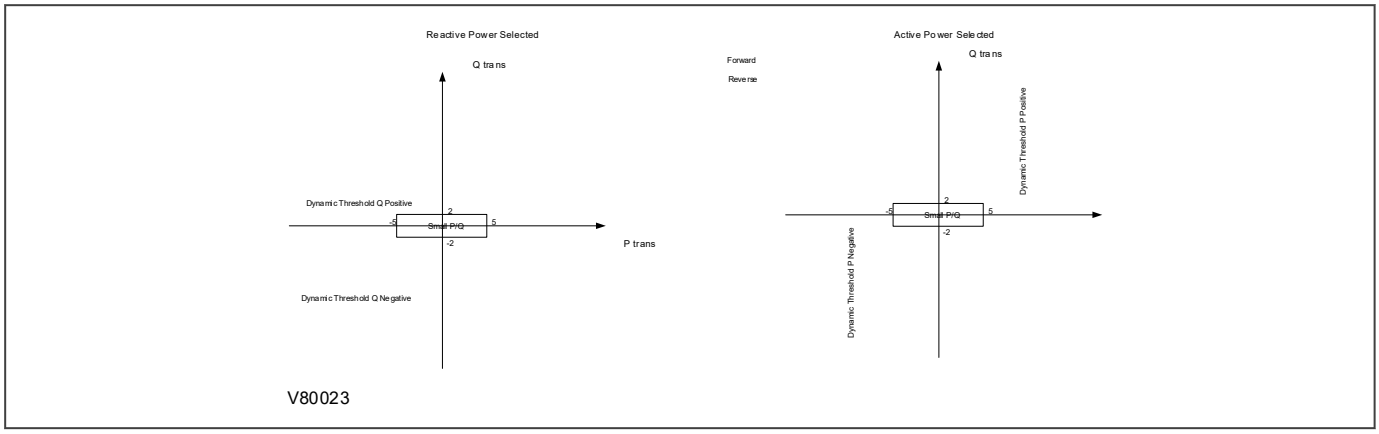

Figure 152: Reactive and active power selection

The following default settings are recommended for the majority of applications:

- ***TEF[X] FTD> VN*** 8.000 V
- ***TEF[X] Dir>Qf Set*** 50.0 KW
- ***TEF[X] Dir>Qr Set*** 21.0 KW

It is important to note that all settings for the TEFD function, including those at 220Hz, can be set based on 50Hz nominal secondary values. This is because the gain of the 220Hz transient filter is 1.

The inputs to this module are:

- The residual voltage
- The residual current
- ***TEF[X] FTD>VN*** (defines the threshold for the TEFD detection)
- ***P/Q Threshold*** (defines the threshold for the selection between P or Q in the fault's detection)

The TEFD outputs two signals to indicate a forward and a reverse fault.

Ground OC Dir

The Direction Detector should be disabled in this case due to a Solidly Grounded System, and the directionality determined by Earth Fault 1 Measured (IN1>1). Therefore, only TEFD should enable the FTD (Fault Type Detector) to detect an intermittent fault or a transient fault.

The following Operands are also available:

TEF[X] Inhibit: used to inhibit the TEF function and reset all associated signals

Reset TEF[X]: can be configured as a user-defined manual reset alarms

15.27.2 TRANSIENT EARTH FAULT DETECTION LOGIC

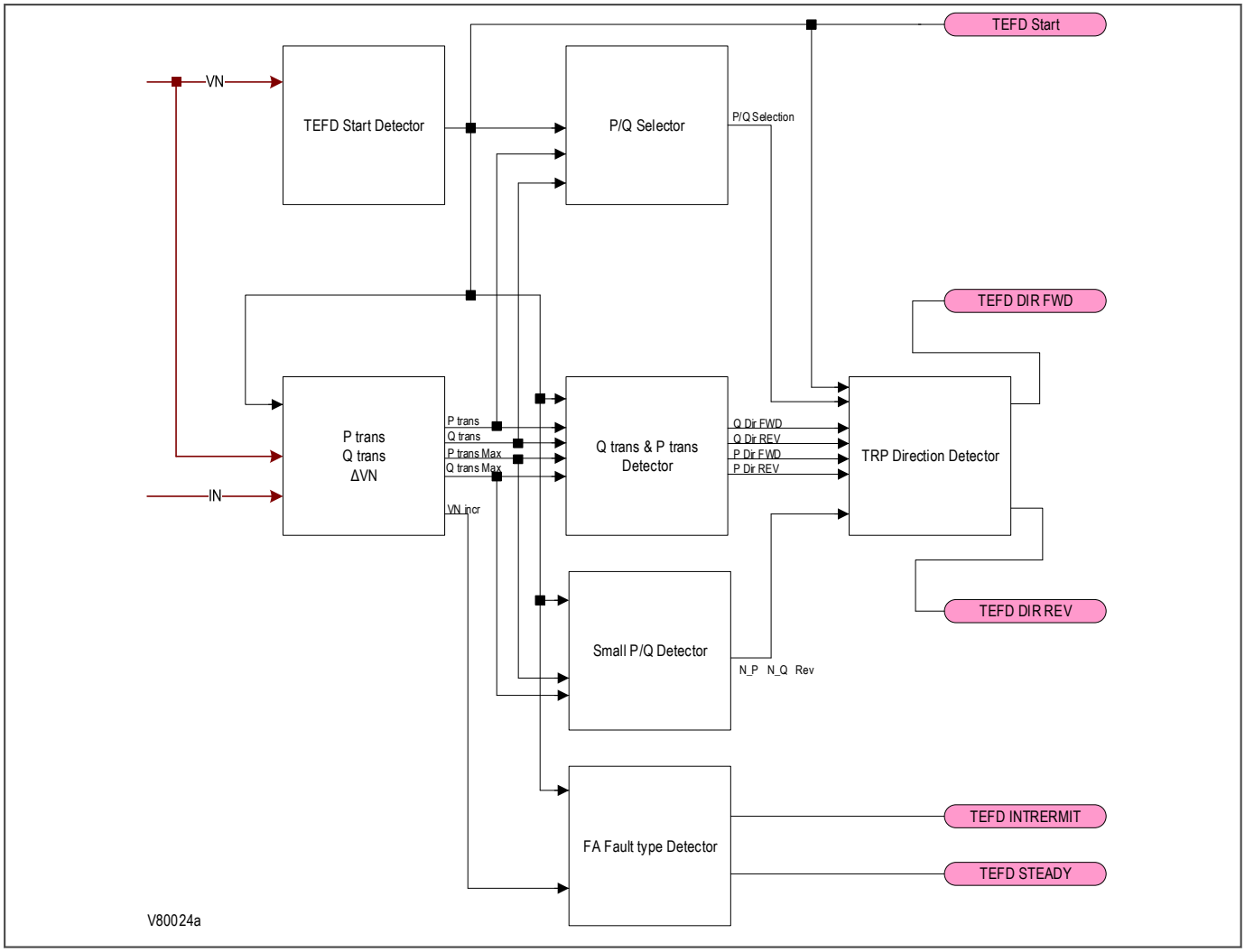

Figure 153: Simplified TEFD scheme

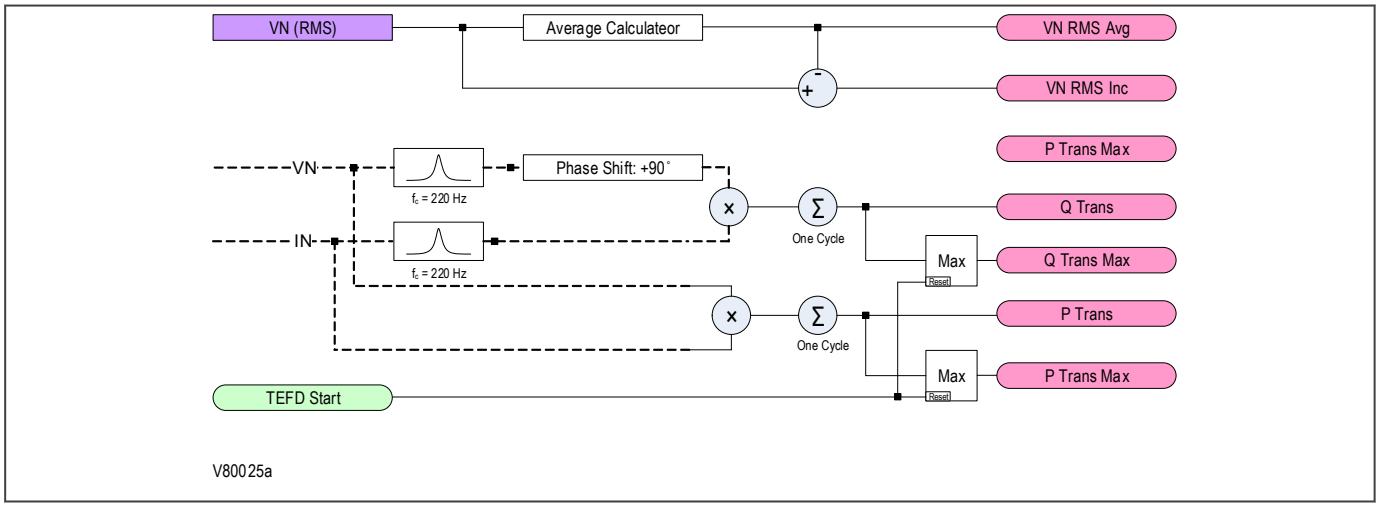

Figure 154: Scheme of the calculation of P Trans, Q Trans and U RMS Inc

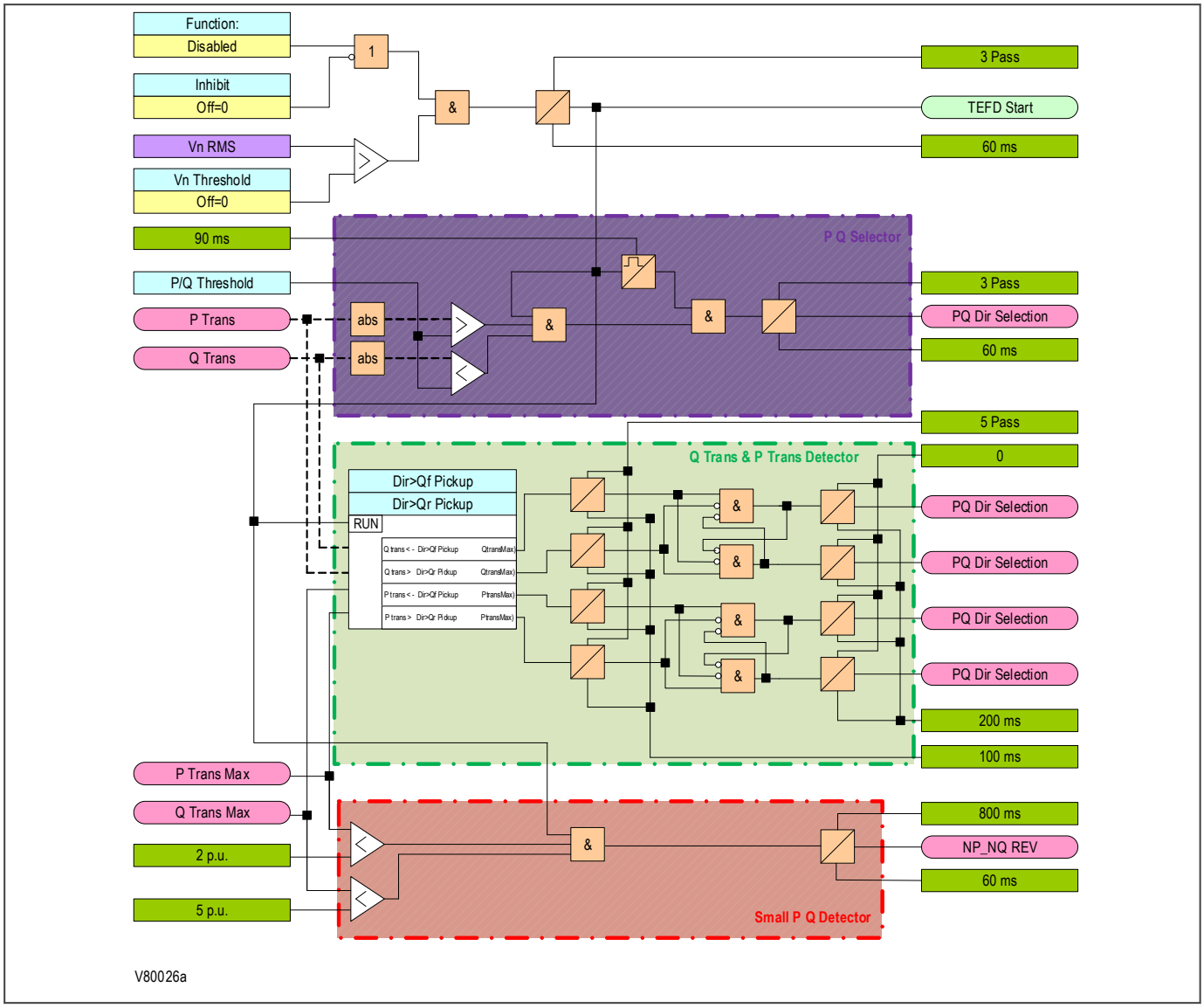

Figure 155: TGFD start, PQ detector, small PQ selector and dynamic Q trans & P trans

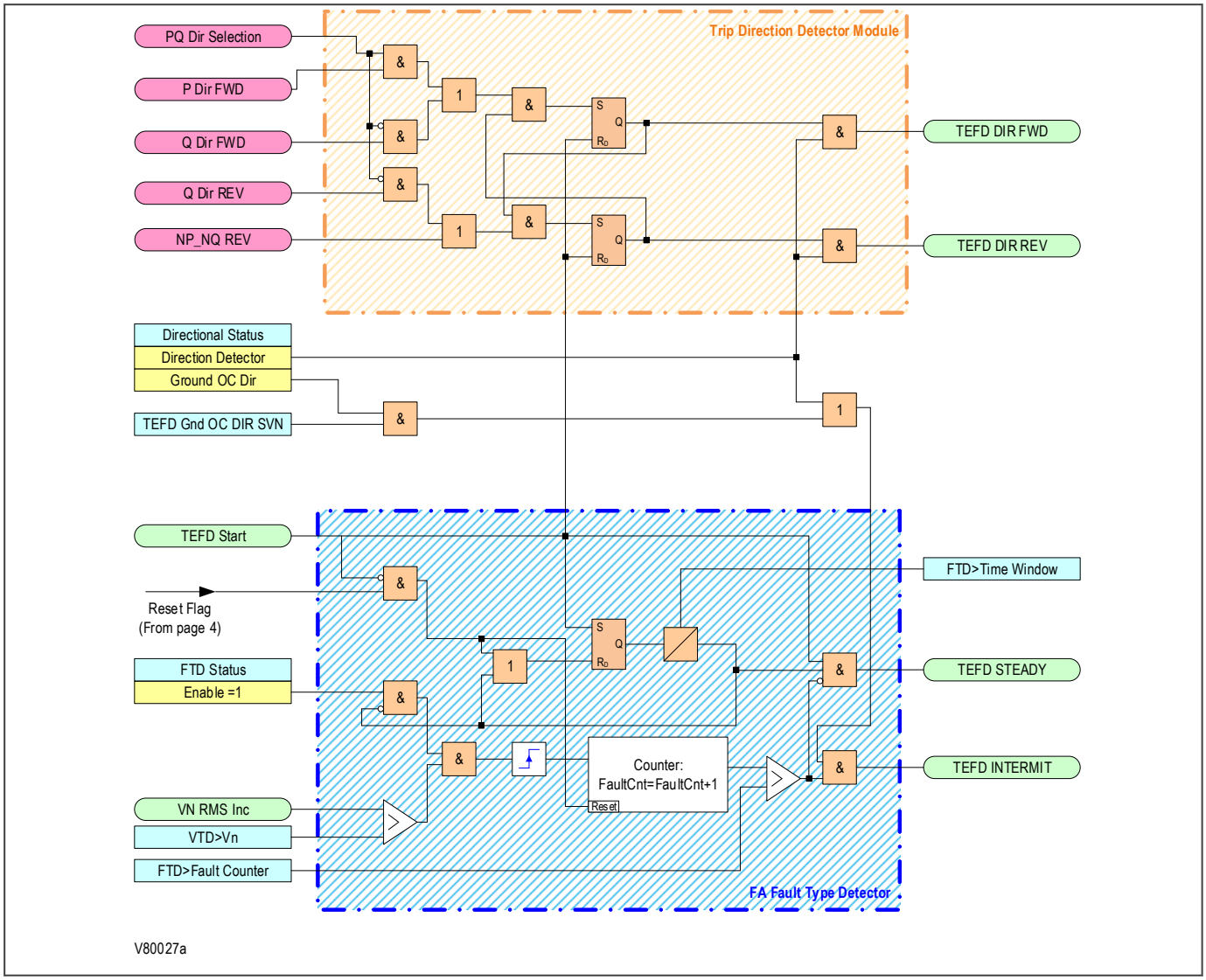

Figure 156: TRP direction detector module and FA fault type detector scheme

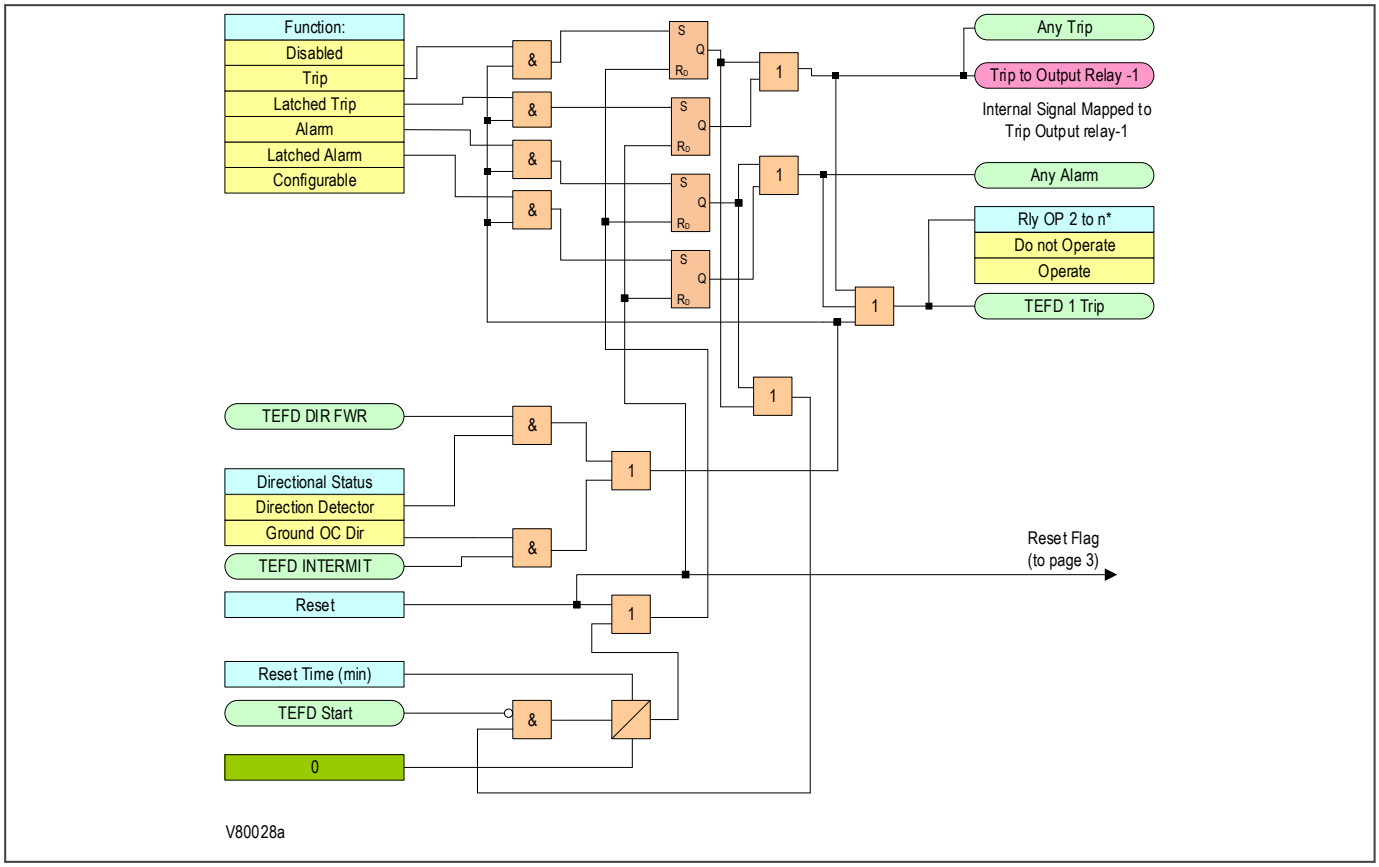

Figure 157: Alarm & trip outputs signals and reset scheme

15.27.3 APPLICATION NOTES

Transient Earth Fault Detection (TEFD) in this device comprises three modules:

- Transient Earth Fault Detection module (TEF)
- Fault Type Detector (FTD)
- Direction Detector (DD)

> *Note:*
> *Transient Earth Fault Detection functionality is implemented for 50 Hz only.*

15.27.3.1 TRANSIENT EARTH FAULT DETECTION: ACTIVE POWER CHECK

A preventive measure should be taken in cases when relays are located at the extremities of a radial system, where the charging current component reduces the further the relay is from the source, and the active component remains small but constant. In these cases, the transient active current component can be comparable to the transient reactive current during the directional check of the TEFD algorithm.

To ensure correct directionality for all fault positions and system configurations (radial, ring or meshed), the TEFD algorithm shall be supplemented with an additional element - 'Active Power Check'. This scheme ensures the correct directional decision is raised regardless of residual active power levels present in the system at the time of the fault. Sensitive Directional Earth Fault (SDEF) with Active Power Check shall be applied in parallel with the TEFD algorithm.

The combined logic for the TEFD and SDEF is shown in the figure below. A 'Forward START' (shown as a name modified User Alarm) signal is raised when either TEFD FWD or SDEF FWD signals are active. However, 'Forward START' is inhibited if the SDEF REV signal is ever active. This ensures SDEF takes priority if there is enough

residual active power during a fault condition. For cases where the residual active power is low, the TEFD algorithm provides the directional decision.

An additional 100ms delay is included to delay the start conditions, ensuring the SDEF protection is not adversely affected by the initial fault transient. The TEFD logic is unaffected by the additional timer as its directional decision is latched for a minimum of 200ms after fault inception.

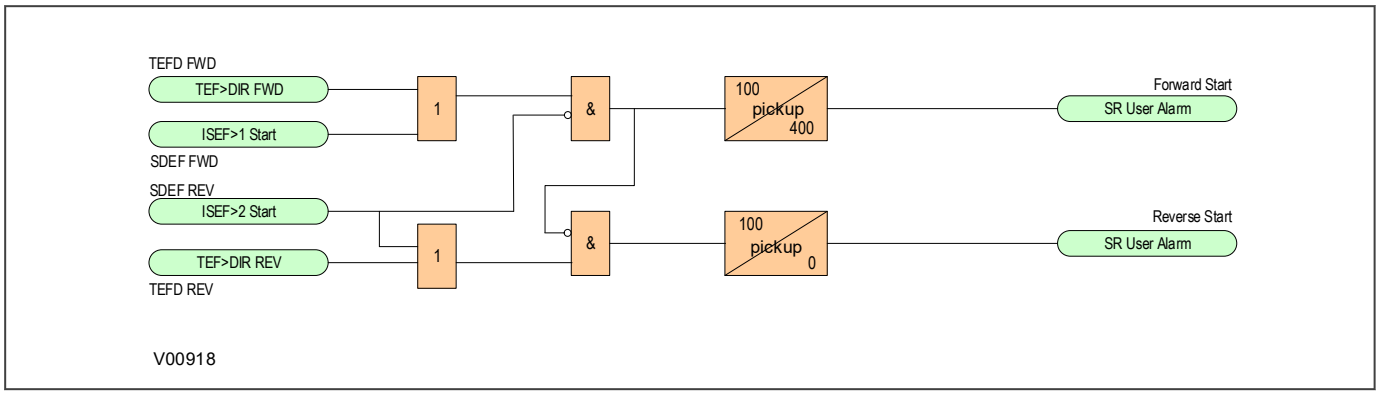

Figure 158: Combined TEFD and SDEF start PSL logic

15.28 HIGH IMPEDANCE FAULT (HIZ) DETECTION

High ground resistance/impedance faults in overhead distribution feeders are characterized by significantly low fault current. If resultant fault current is in the order of expected unbalance load or less, it cannot be reliably detected/ differentiated by typical overcurrent protections. These faults are classified as high-impedance (HiZ/HiF) faults. A HiZ/HiF fault is not accompanied by excessive current, however, an undetected HiZ/HiF fault is a risk to people and property as well as having the potential to evolve into a high magnitude evolving fault.

A high impedance earth/ground fault happens when a primary conductor makes unwanted electrical contact with a tree limb, road surface, sidewalk, or with other surfaces or objects which restrict the flow of fault current to a level below that reliably detectable by conventional overcurrent devices.

There are generally two aspects of the high impedance fault hiding below the conventional overcurrent relay's threshold: 1) the lower current due to the high impedance in the fault circuit, in this case the relay will not pick-up a typical overcurrent protection; 2) the transient/intermittent conduction of the fault, which often resets the relay's earth fault detection process due to the short duration.

15.28.1 HIGH IMPEDANCE FAULT (HIZ/HIF) PROTECTION IMPLEMENTATION

The characteristic high impedance residual current varies when the fault happens on different material surfaces (i.e. grass, cement, asphalt and soil etc.). The extraction of HiZ/HiF information and the design of the discrimination rules based on different algorithms and rules is determined only based on the neutral/residual current measurement. Neutral voltage is used (when available) to calculate the direction of the fault.

The number of metering elements are calculated from the original current to get the characteristic at different fault levels, which includes RMS, incremental/delta of RMS, wavelet transform energy and harmonics using FFT (Fast Fourier Transform). A data effectiveness selection is used to discriminate the fault waveform from noise and very normal situations, to ensure HiZ/HiF detection is immune under noise and normal conditions. This selection focuses on the harmonic distortion referred to as the fundamental element.

Rule-1 RMS OC: The absolute value of the original current RMS energy. The input current is either the measured sensitive ground current, or the neutral current derived from the phase currents. The value of this input current should be, under normal circumstances, less than a certain threshold.

Rule-2 Deviation RMS: A randomness algorithm based on di/dt, when there is an intermittent arcing fault. A continuous fluctuation is observed which can be reflected by the di/dt RMS value.

Rule-3 Delta Energy: Another randomness algorithm based on the variation of the average value of current energy. Similar to Rule -2.

Rule-4 Relative Wav Rand: Based on the wavelet transform, the energy of scale 1 is calculated based on which a relative randomness algorithm was developed.

Rule-5 Harm Ph Angle: Based on the phase difference between the 3rd harmonic and fundamental current at the zero-crossing of the fundamental current.

Rule-6 Harm AND Energy: A combination of harmonic and wavelet transform ratio which can discriminate most of the fault from noise and normal operation.

Based on the rule selection criteria, the output of the selected components designed from the above rules are connected to an "OR" gate, to produce the output of the residual HiZ/HiF output which is supervised by the directional logic.

The High Impedance Fault protection function can be supervised by the special directional (DIR) logic. This is specifically applicable when a system is grounded via a resistor with larger distributed capacitance. The fault generated transient may be distributed along all the lines due to the large distributed capacitance along the health and faulted line. Therefore, a direction element is needed to enhance the performance of the HiZ/HiF. The DIR consists of two steps: 1) the instantaneous power calculation; 2) the output of the direction results as well as the threshold setting.

15.28.2 HIGH IMPEDANCE (HIZ/HIF) RULES AND SETTINGS DESCRIPTION

The settings for the High Impedance fault protection function are placed at ***SETPOINTS\MONITORING\HIGH IMPEDANCE*** path.

Some of the settings described below are generic to the function, others are dedicated to a particular rule option. These settings are as follows:

Signal Input

This setting provides the selection of the current used for HiZ/HiF detection, either neutral from phases or measured from the SEF option. The setting selection shows `Calculated IN, Measured IG` as options, where `Measured IG` stands for ISEF sensitive earth current.

> *Note:*
> *Rule selection settings:*
> *Any, or all, of the Rules (Rule-1 RMS OC, Rule-2 Deviation RMS, Rule-3 Delta Energy, Rule-4 Relative Wav Rand, Rule-5 Harm Ph Angle, Rule-6 Harm AND Energy) can be selected to be applied to HiZ/HiF detection. The user can select all the rules for the most dependable output; and, if test data is available, the appropriate rule can be selected based on the playback test result performance of the individual rule output.*

RULE-1 RMS OC SETTINGS

RMS OC

This setting selects the use of the Rule-1 RMS OC for the High Impedance algorithm calculations. If set to `On`, the absolute value of the original current RMS value in normal situations should be lower than the ***I Supv Thresh*** setting value. A value higher than the setting will set the operation of the rule to true. If set to `Off`, this rule will not apply for the HiZ/HiF detection.

I Supv Thresh

This setting sets the pick-up threshold for **Rule-1 RMS OC** for the high impedance calculations.

RULE-2 DEVIATION RMS SETTINGS

Deviation RMS

This setting selects the use of the **Rule-2 Deviation RMS** for the High Impedance algorithm calculations. If set to `On`, a randomness algorithm based on di/dt will use the di/dt RMS value to discriminate if there is an intermittent arcing fault. If set to `Off`, this rule will not apply for the HiZ/HiF detection.

RULE-3 DELTA ENERGY SETTINGS

Delta Energy

This setting selects the use of the Rule-3 Delta Energy for the High Impedance algorithm calculations. If set to `On`, a randomness algorithm based on the variation of the average value of current energy will be used. Similar to Rule -2, if set to `Off`, this rule will not apply for the HiZ/HiF detection.

RULE-4 RELATIVE WAV RAND SETTINGS

Relative Wav Rand

This setting selects the use of the **Rule-4 Relative Wav Rand** for the High Impedance algorithm calculations. If set to `On`, a relative randomness algorithm based on the wavelet transform will be used, based on the energy of scale 1 wavelet energy (WTi1). If set to `Off`, this rule will not apply for the HiZ/HiF detection.

RULE-5 HARM PH ANGLE SETTINGS

Harm Ph Angle

This setting selects the use of the **Rule-5 Harm Ph Angle** for the High Impedance algorithm calculations. If set to `On`, the phase difference between the 3rd harmonic and fundamental current at the zero-crossing of the fundamental current will be used. If set to `Off`, this rule will not apply for the HiZ/HiF detection.

3PHA Fund Thresh

This setting defines the threshold of fundamental magnitude that enables the rule 5: Zero-crossing phase angle of 3rd harmonic.

3PHA 3rdH Thresh

This setting defines the threshold of the 3rd harmonic to fundamental ratio for the rule 5: Zero-crossing phase angle of 3rd harmonic.

3PHA DelAng 180+X

This setting sets the lower limit of the phase angle between 3rd harmonic and fundamental.

3PHA DelAng 180-X

This setting sets the higher limit of the phase angle between 3rd harmonic and fundamental.

The following figure depicts the rule 5 tripping zone in grey based on the settings:

3PHA DelAng 180+X (HarmAng Del Ang 180+X)

3PHA DelAng 180-X (HarmAng Del Ang 180-X)

The ***PhDiff 3rd -1st*** represents the difference in angle between the 3rd harmonic and the fundamental. The actual value `H3/H1 Phase` that provides this measurement can be found at ***MEASUREMENTS\HiZ*** path. The angle range goes from 0 to 360º counterclockwise.

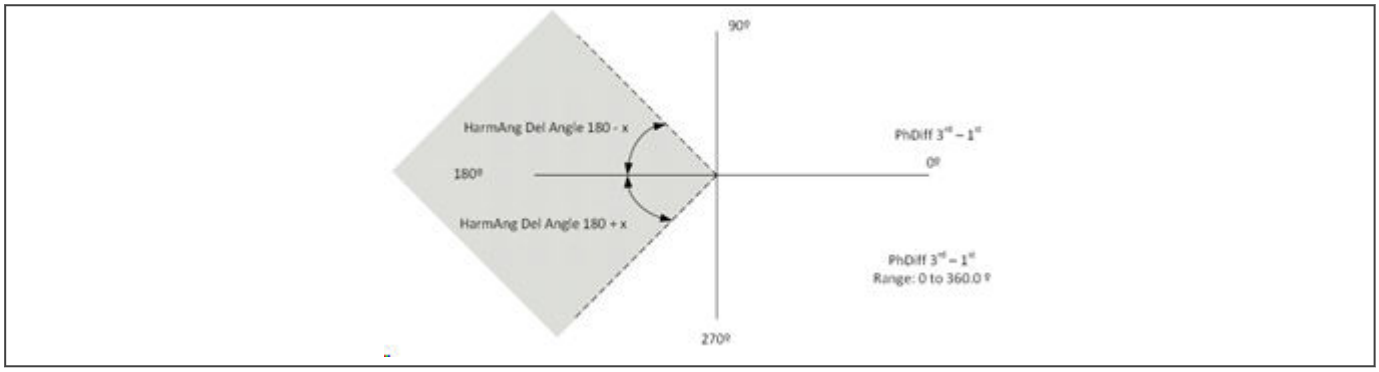

Figure 159: Angle difference between 3rd harmonic and fundamental

RULE-6 HARM AND ENERGY SETTINGS

Harm AND Energy

This setting selects the use of the **Rule-6 Harm AND Energy** for the High Impedance algorithm calculations. If set to `On`, a combination of harmonic and wavelet transform ratio to discriminate most of the fault from noise and normal operation will be used. If set to `Off`, this rule will not apply for the HiZ/HiF detection

> *Note:*
> *Based on the rule selection criteria, all the outputs of the selected components designed from the above rules are connected to an "OR" gate, producing the HiZ/HiF output which can be supervised by the directional function embedded in the HiZ/HiF element.*

COMMON SETTINGS FOR ALL RULES

Time Delay

This setting sets the time necessary to determine a High Impedance occurrence.

tReset

This setting establishes the time necessary to reset a High Impedance occurrence.

Inhibit

This setting allows the selection of a Flexlogic operand that, when asserted, will block the HiZ/HiF element.

DIRECTIONAL SETTINGS FOR ALL RULES

> *Note:*
> *The directionality calculation only applies to P14D models.*

DIR Function

This setting enables the directional supervision over the High Impedance rules calculations.

P/Q Mode

This setting provides the two operation modes: `Active P` or `Reactive Q` for High Impedance directional detection.

Forward Thres

This setting sets the power value pick-up threshold for the element for the `Active P` mode selection at ***P/Q Mode*** setting.

Reverse Thres

This setting sets the power value pick-up threshold for the element for the `Reactive Q` mode selection at ***P/Q Mode*** setting.

Dir Auto Thres

This setting enables/disables an Adaptive Power Threshold (Dynamic Power Threshold). When enabled, this dynamic threshold adjusts itself according to the amplitude/power conditions: this is, when the directional calculations are triggered to start (Start Flag), this dynamic threshold adds 0.1 of the max instantaneous power to the fixed threshold (P or Q Threshold) set by setting.

The direction calculations using the **dynamic power threshold** are triggered to start when the ***Dir Auto Thres*** setting is set to `Enabled`, and when either the operand configured in the ***SEF Start*** setting is asserted, or when the value of the residual voltage measured by the device is higher than the value set at ***Vres> Thres*** setting. If those conditions are not met the directional calculations will be done using the **fix power thresholds**.

The **dynamic threshold** will be either **P + 0.1*Pmax**, or **Q + 0.1*Qmax**, depending on the ***P/Q Mode*** setting selection.

The **fixed power thresholds** are set for P and Q at the ***Forward Thres*** setting for active power (P), and ***Reverse Thres*** setting for reactive power (Q).

When the instantaneous power (P or Q) is too small and the direction can't be determined, the direction is set to reverse when the directional calculations are triggered to start (Start Flag).

> *Note:*
> *It is recommended that the Dynamic threshold is used with reactive instantaneous power direction detection.*

Example of dynamic power threshold calculations:

An example is show in the figure below, where the fixed Q threshold is '1'. When the directional calculations start (START), the first transient spike's instantaneous power is '2', then the Q threshold is set to '1', the second spike's power is '6', then the Q threshold is changed to fixed Q + 0.1*Qmax, and 1.2 is the new Q threshold.

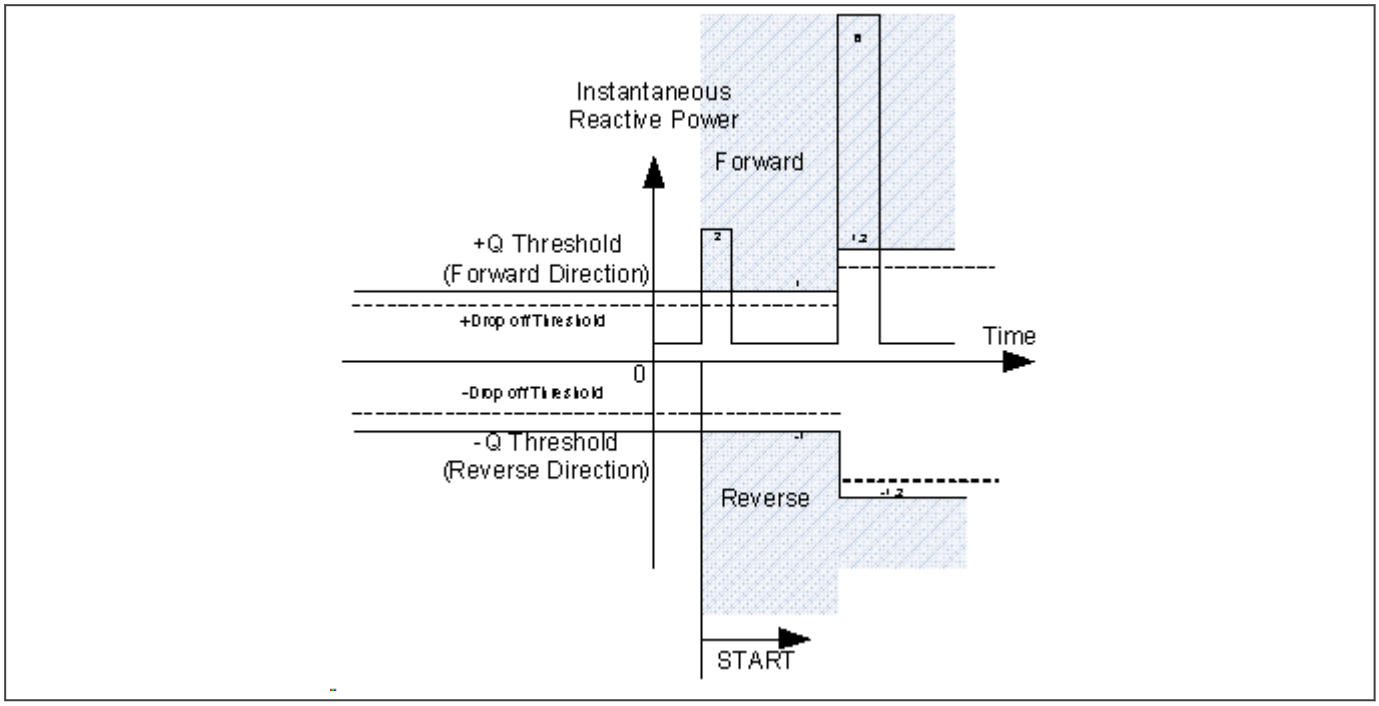

Figure 160: Dynamic threshold for direction detection

SEF Start

This setting selects a FlexLogic operand to start the directional calculations using the dynamic threshold.

Vres> Thres

This setting defines the Residual Voltage pickup value to start the directional calculations, using the dynamic threshold.

The functionality provided by Residual Voltage will not be available in solid-grounded systems, as there is no Residual Over-Voltage in solid-grounded systems.

Dir Supv

This setting determines the direction (Forward or Reverse) of the HiZ/HiF element.

> *Note:*
> *The directional function is embedded in the HiZ/HiF element. For the direction to be calculated, the **DIR Function** setting should be set to Enabled and the **Dir Supv** setting has to be set either to Forward or Reverse. If either **Dir Function** setting is set to Disabled or the **Dir Supv** setting is set to Non-Directional, the directional supervision would not be applied to the HiZ/HiF element.*

Dir Inhibit

This setting allows the selection of a FlexLogic operand that, when asserted, will block the directional supervision of the HiZ/HiF element.

15.28.3 HIGH IMPEDANCE FAULT (HIZ/HIF)PROTECTION LOGIC

The following overall functional logic diagram details the definition and design for a high impedance fault detection application. The block diagram illustrates the overall aspects of the HiZ/HiF detection methods logic, input and output signals, logical flow of the associated functions/features.

For Neutral/Residual Current Based (HiZ IN), the HiZ neutral/residual current detection uses 6 rules, such as:

- RMS current OC (Rule 1)
- Deviation of RMS (Rule 2)
- Delta Energy (Rule 3)
- Relative wavelet energy randomness (Rule 4)Harm phase angle (Rule 5)
- Harm phase angle AND wavelet energy (Rule 6)

Neutral/residual method uses IN (IN2 derived from phases), or ISEF (sensitive earth value measured), and (if available) VN derived from phases, for directional supervision.

The typical Neutral/residual detection interval is adaptive between 2 to few cycles.

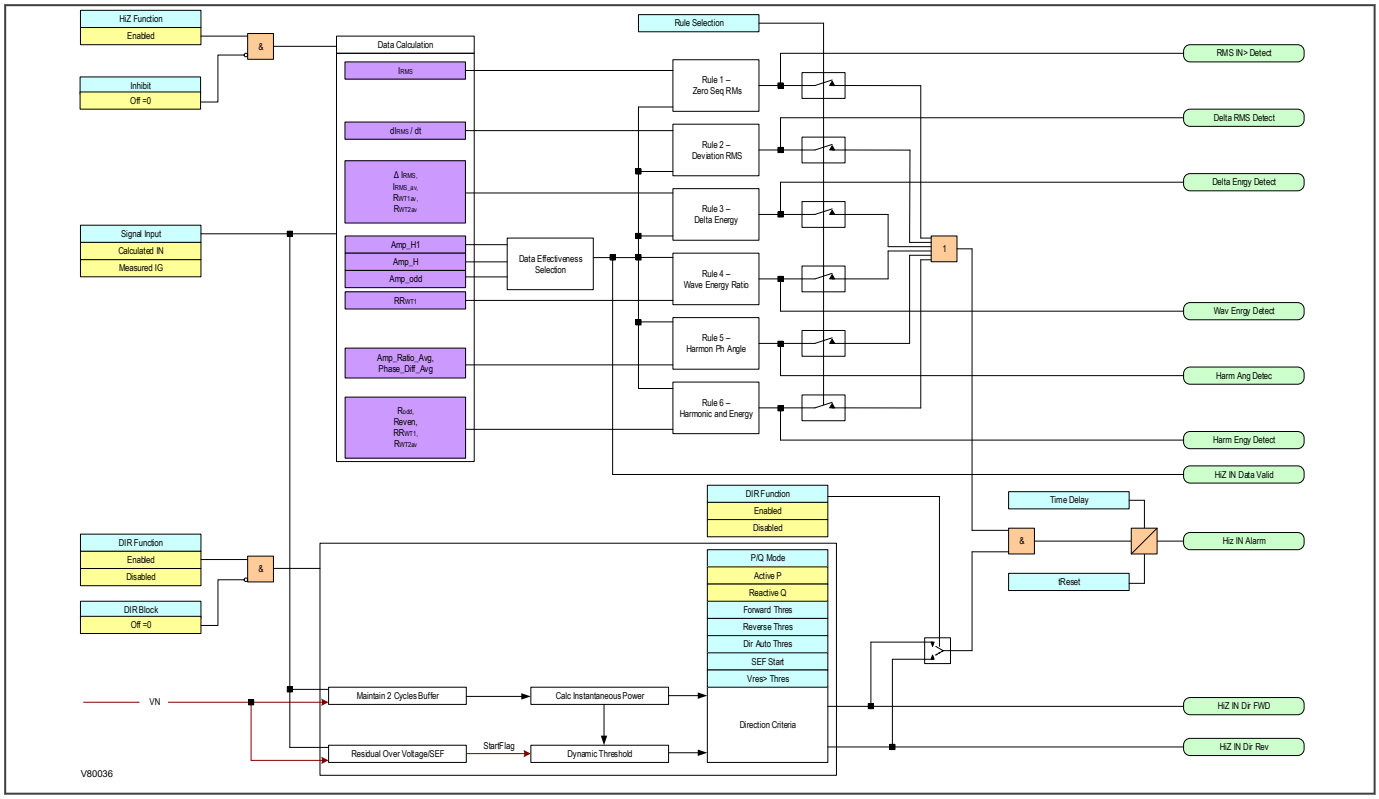

Figure 161: HiZ/HiF protection logic

15.29 TRIP BUS

Mutilin Agile IEDs provide six identical Trip Bus elements. The Trip Bus element allows aggregating outputs of protection, monitoring, control elements, inputs, etc., without the need to use the FlexLogic Equation Editor to assign them. In a simple and effective manner, you can directly map each each signal to any of the 16 input entry signals available to each Trip Bus element. Each Trip Bus can be assigned to trip, alarm, or the other logic actions. Simple trip conditioning such as latch, delay, and seal-in delay are available.

Selection of the ***Trip***, ***Latched Trip***, ***Alarm***, ***Latched Alarm*** or ***Configurable*** setting enables the Trip Bus X function.

Relay O/P 1-Trip, will only operate when the ***Trip*** or ***Latched Trip*** function is selected, and the Trip Bus X operates. If the ***Latched Trip*** function is selected, the output relay will be ON even after the input conditions are cleared until the reset command is issued. The ALARM LED will not turn on if the Trip Bus X operates when set to ***Trip*** or ***Latched Trip***.

When the ***Alarm*** function is selected and the Trip Bus X operates, the ALARM LED will flash and self-reset when the operating conditions are cleared.

When the ***Latched Alarm*** function is selected, and the Trip Bus X operates, the ALARM LED will flash during the Trip Bus X operating condition, and will be lit steadily after the conditions are cleared. The ALARM LED can be cleared by issuing a Reset command.

Relay O/P 1-Trip, will not operate if the ***Latched Alarm*** or ***Alarm*** setting is selected, The Output relay #1 can be configured to operate using the Trip Bus X output operands and the FlexLogic.

When the ***Configurable*** function is selected, neither the Trip output, nor the ALARM LED will turn on automatically. These must be configured using their own menus and FlexLogic operands.

15.29.1 TRIP BUS IMPLEMENTATION

The settings for the ***Trip Bus*** control function are placed at ***SETPOINTS\CONTROL\TRIP BUS*** path. There are six ***Trip Bus*** elements available with sixteen signal inputs available for each ***Trip Bus*** element.

These settings are as follows:

Input 1 to 16

These settings (***Input 1*** to ***Input 16***) select a FlexLogic operand to be assigned as an input to the ***Trip Bus***.

Latching

This setting `enables` or `disables` latching of the ***Trip Bus*** output. This is typically used when lockout is required, or user acknowledgement of the relay response is required.

When the NV Latch is enabled using this setting, the PKP operand remains latched after the input trip condition becomes false, and the ***PKP Delay*** timer continues to run. The Trip Bus operates once the Pickup Delay timer elapses to zero. Both the PKP and OP signals, along with the assigned output relay, will remain latched until the operand configured under the ***Reset*** setting becomes true.

It is important to clarify that the NV Latch is distinct from the Trip/Alarm Latched functionality specified under the setting ***Function.*** The NV Latch holds both PKP and OP signals, including the output relay, whereas Trip/Alarm Latch is applicable only to output signals, specifically ***Trip Bus OP*** and the assigned output relay. The Trip/Alarm Latch resets upon the initiation of the Reset command via the Reset button located on the front panel or through Device\Resetting. However, the NV Latch has a specific resetting input configured under the ***RESET*** setting.

If both the Trip/Alarm Latched Function and NV Latching are not required simultaneously, either the ***Function*** setting should be configured to Trip/Alarm rather than Latched Trip/Alarm, or NV Latching should be disabled.

Reset

The ***Trip Bus*** output is reset when the operand assigned to this setting is asserted.

Pickup Delay

This setting provides a definite time Pickup Delay (Time Delay) for the ***Trip Bus*** operation. Instantaneous operation is selected by a Pickup time delay setting of 0.000 s.

Dropout Delay

This setting provides a definite time Dropout Delay (tRESET). Instantaneous reset is provided by a Dropout time delay setting of 0.000 s.

Inhibit

The ***Trip Bus*** element will be blocked when the selected operand is asserted.

> *Note:*
> *The **Any Trip** operand must not be programmed as an input for the **Trip Bus** function*

Rly OP[Y]

Operation of these output relays is programmed by the user.

Events

Selection of the ***Enabled*** setting enables the events of the Trip Bus function.

Targets

Selection of the ***Disabled*** setting disables the targets of the Trip Bus function. In ***Self-Reset*** mode, the targets remain active until the function drops out. In ***Latched*** mode, the target maintains the set state until deactivated by a Reset command.

15.29.2 TRIP BUS LOGIC

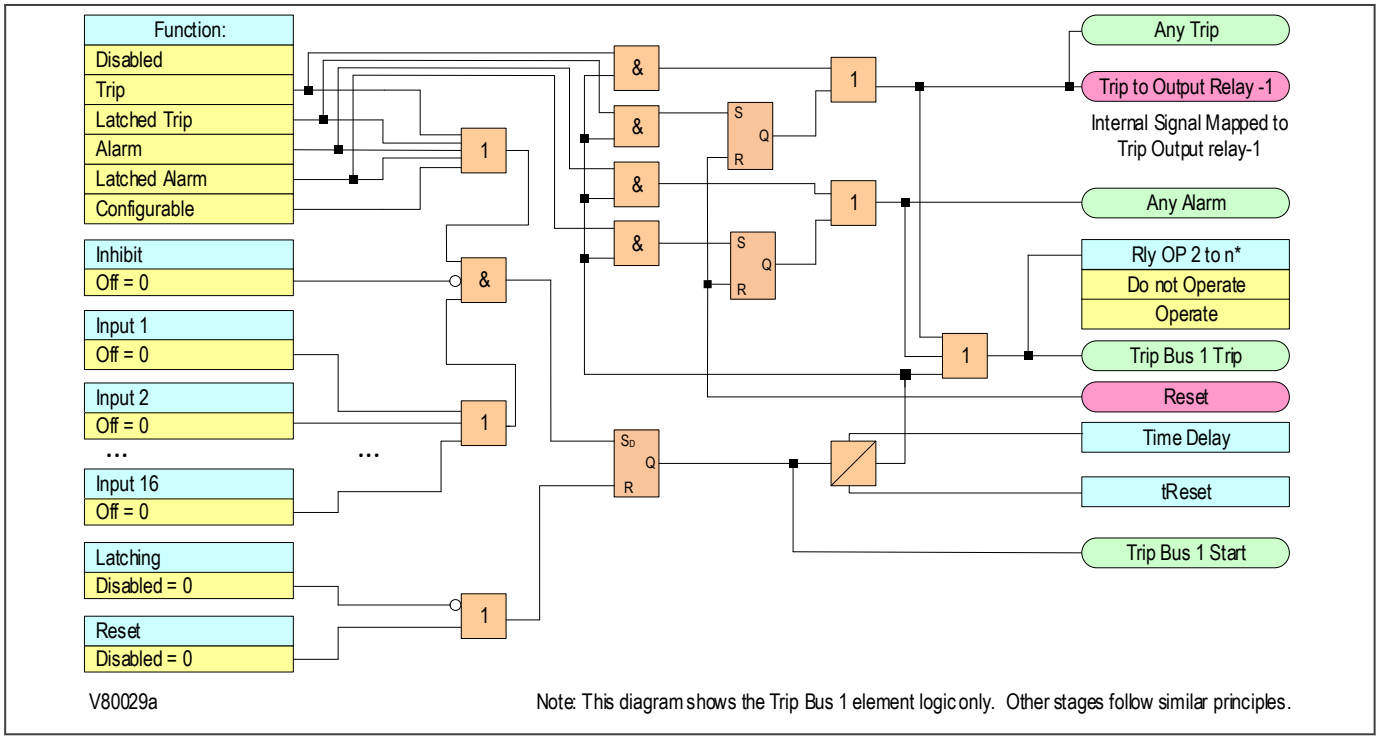

Figure 162: Trip bus logic

15.30 DIGITAL ELEMENTS

Multilin Agile IEDs have 64 identical digital elements available. A digital element can monitor any FlexLogic operand, present a target message and enable events recording depending on the output operand state. The digital element settings include a name to be referenced in any target message, an inhibit input from any selected FlexLogic operand, and a timer for pickup (time delay) and dropout (tRESET) delays for the output operand.

Note:
Digital elements run once per power system cycle. They can easily fail to react to an input signal or a block signal with a duration less than one power system cycle. This also means that the digital element output can react up to one power system cycle later than the pickup and reset delay settings indicate.

Warning:
Do not use digital elements with transient signals, such as communications commands.

Warning:
Do not use digital elements where random delays of up to one cycle cannot be tolerated, such as in high-speed protection.

15.30.1 DIGITAL ELEMENTS IMPLEMENTATION

The settings for the ***Digital Elements*** control function are placed at ***SETPOINTS\CONTROL\DIGITAL ELEMENTS*** path. There are 64 ***Trip Bus*** elements available with sixteen signal inputs available for each ***Trip Bus*** element.

These settings are as follows:

Name

The user can assign a user-defined name to each ***Digital Element***. Default pre-defined names are `Dig ElemX`, X being the number of each element. This ***Name*** is used In FlexLogic operands, Target messages and Events, etc.

Input

Selects a FlexLogic operand to be monitored by the ***Digital Element***.

Pickup Delay

Sets the required time delay from the element pickup (start) to the element operation (trip). Instantaneous operation is selected by a Pickup time delay setting of 0.000 s.

Note:
To avoid nuisance alarms, set the delay greater than the operating time of the breaker.

Dropout Delay

This setting sets the dropout time delay (tRESET) to reset. Instantaneous reset is provided by a Dropout time delay setting of 0.000 s.

Inhibit

The Digital Element will be blocked when the selected operand is asserted.

15.30.2 DIGITAL ELEMENTS LOGIC

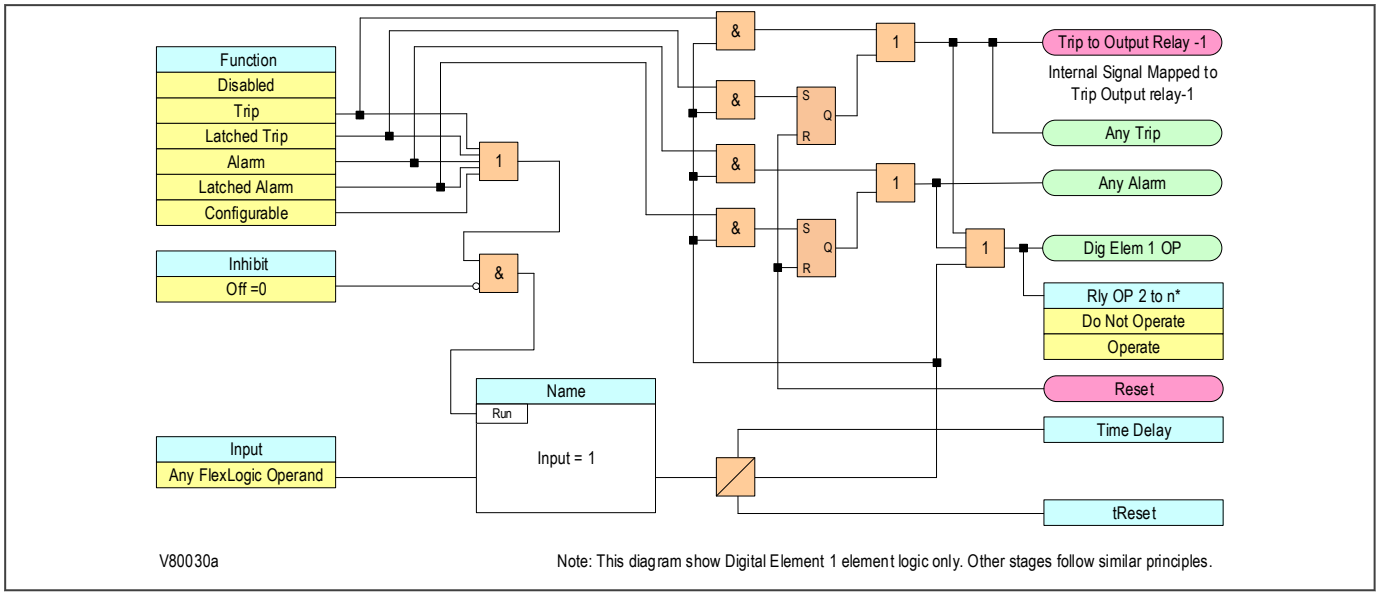

Figure 163: Digital elements logic

15.30.3 APPLICATION EXAMPLE

Trip Circuit Integrity Monitoring

In many applications it is desired to monitor the breaker trip circuit integrity so that problems can be detected before a trip operation is required. The circuit is considered to be healthy when the voltage monitor connected across the trip output contact detects a low level of current (Relay output voltage is not zero), well below the operating current of the breaker trip coil. If the circuit presents a high resistance, the trickle current falls below the monitor threshold, and an alarm is declared.

In most breaker control circuits, the trip coil is connected in series with a breaker auxiliary contact, which is open when the breaker is open. To prevent unwanted alarms in this situation the trip circuit monitoring logic must include the breaker position.

Relay Output 1 -Trip is a trip contact. Using the output settings, this output is given an ID name; for example, `Relay 1-Trip` Assume a 52a breaker auxiliary contact is connected to Opto Input 1 to monitor breaker status (Inhibit when Opto input 1 is Off).

Using the Opto Input settings, this input is given a name, for example, ***Opto I/P 1***, and is set to `On` when the breaker is closed, and the function is blocked when the breaker is open, e.g. ***Opto I/P 1 Off***. The settings to use digital element 1 to monitor the breaker trip circuit are as indicated.

Setting	Parameter
Function	Enabled
Name	Bkr Trip Cct Out
Input	Opto I/P 1 On
Pickup Delay	0.200 s
Dropout Delay	0.100 s
Relays	Relay: Disabled
Inhibit	Opto I/P 1 Off
Events	Enabled

Target	Self-Reset

15.31 ARC FLASH

The relay with Arc Flash Protection module supports fast and secure protection against the arc flash event for safe working environment. Arc Flash protection utilizes up to 4 light detection fiber sensors and dedicated high speed instantaneous overcurrent element with secured Finite Response Filtering. The relay provides one Arc Flash protection element that can utilize up to four arc flash sensor inputs. The relay supports two different arc flash sensor types, point and loop. Light from the light sensor AND logic with high-speed overcurrent ensures fast and secured operation. Further enhancement includes continuous monitoring of individual light sensors with self-test trouble indication. All arc flash sensors with self-test from individual light sensors can be used to design flexible arc flash protection schemes for different configurations depending on the physical locations of the sensors. This individual element can also provide a higher level of redundancy/reliability of the system. In case of detection of any issues with sensors (i.e. failure of self-test), the corresponding light sensor trouble operands (i.e. “AF Sen # Trouble” & “AF Sensor Trouble”) are asserted, and “Sensor Trouble” LED (user configurable) will light up indicating the failure. Very fast detection of the Arc flash light event is also possible using Light as the only detection parameter for alarming purposes. Users can design their own logic using individual “AF Light # Start” “AF Flash Sen # Trip” operands from different light sensors in the FlexLogic engine.

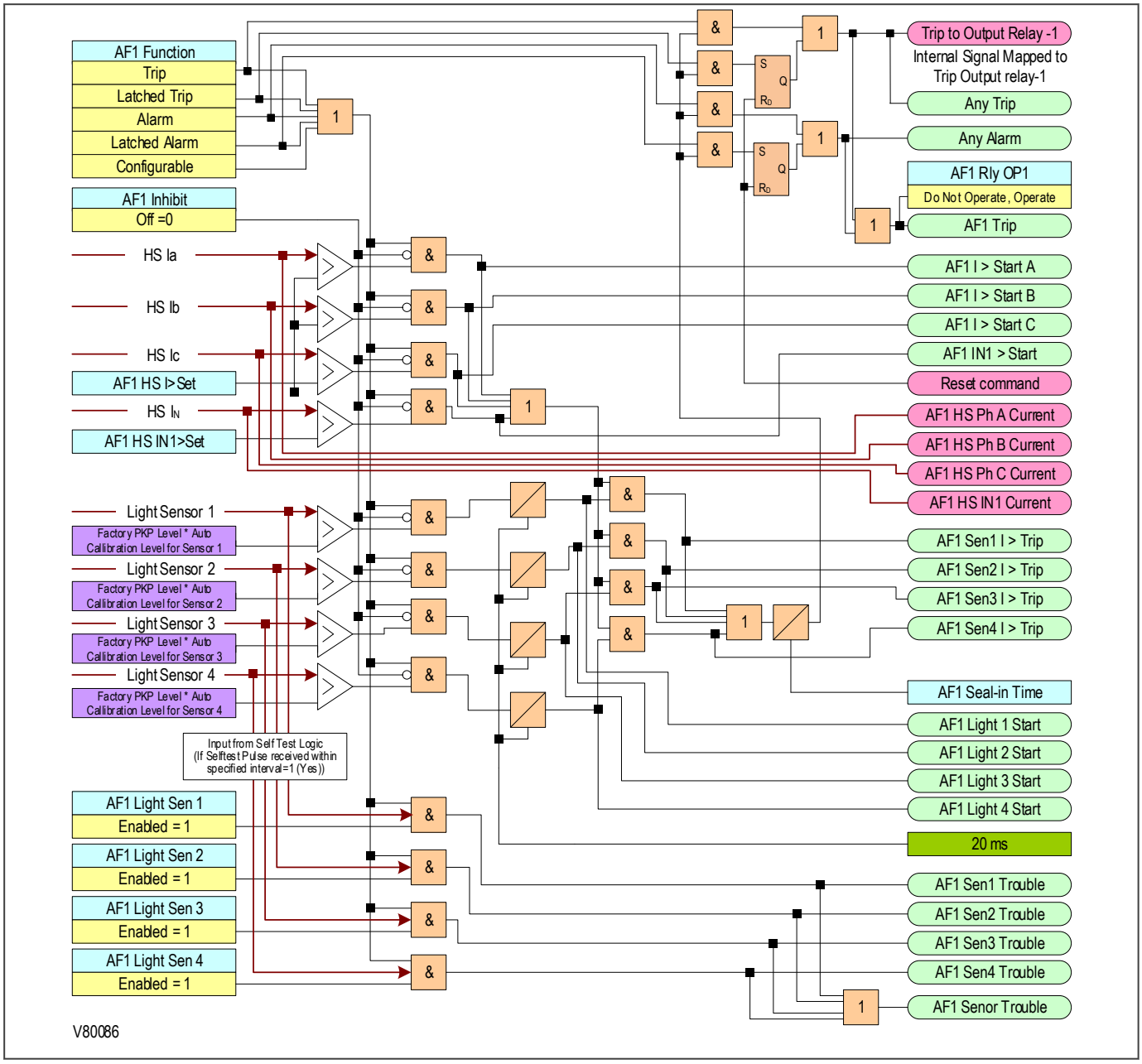

Figure 164: Arc flash logic

CHAPTER 16

SUPERVISION

16.1 CHAPTER OVERVIEW

This chapter describes the supervison functions.

This chapter contains the following sections:

Chapter Overview 362
DC Supply Monitor 363
Voltage Transformer Supervision 365
Current Transformer Supervision 368
Trip Circuit Supervision 370

16.2 DC SUPPLY MONITOR

This product can be powered using either a DC or AC supply. As a DC supply is normally used, a DC Supply Monitoring feature is included to indicate the DC supply status. The nominal DC Station supply is 48 V DC, which is provided by a bank of batteries. It is sometimes possible for this nominal supply to fall below or rise above acceptable operational limits. If the voltage is too high, it may indicate overcharging. If the voltage is too low, it may indicate a failing battery.

In such cases it is very useful to have DC supply monitoring functionality. Multilin Agile products provide such functionality by measuring the auxiliary DC supply fed into the device and processing this information using settings to define certain limits. In addition, the DC Auxiliary Supply value can be displayed on the front panel LCD to a resolution of 0.1 V DC. The measuring range is from 19 V DC to 300 V DC.

16.2.1 DC SUPPLY MONITOR IMPLEMENTATION

The P40Agile products provide three DC supply monitoring zones; zone 1, zone 2, and zone 3. This allows multiple monitoring criteria. Each zone must be configured to correspond to either an overvoltage condition or an undervoltage condition. A single zone cannot be configured to provide an alarm for both undervoltage and overvoltage conditions. Typically, you would configure zones 1 and 2 for undervoltage conditions, whereby the lowest limit is set very low, and zone 3 for an overvoltage condition whereby the upper limit is very high.

This is best illustrated diagrammatically:

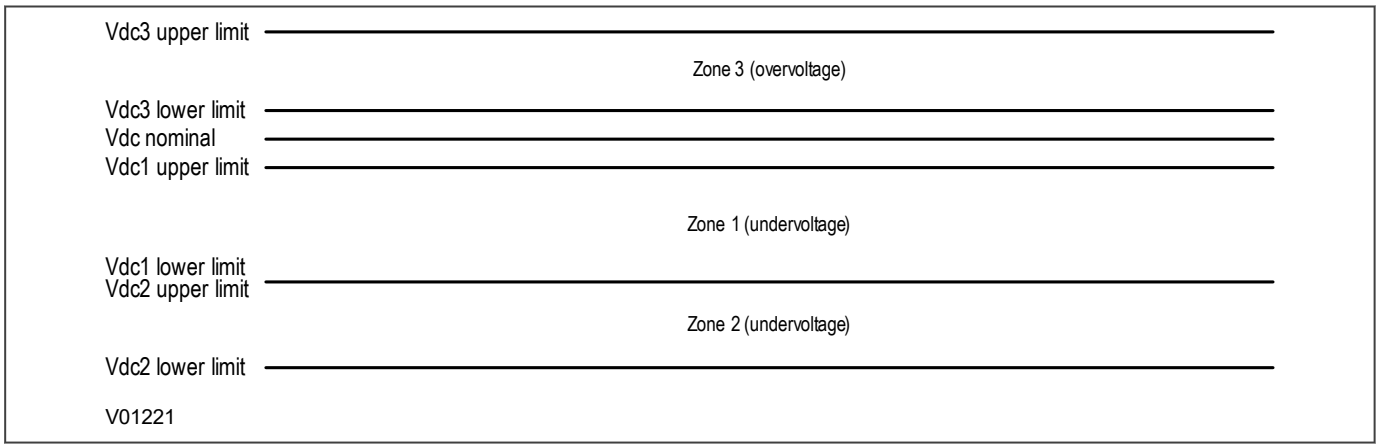

Figure 165: DC supply monitor zones

It is possible to have overlapping zones whereby zone 2 upper limit is lower than zone 1 lower limit in the above example.

The DC Supply Monitoring function is implemented using settings in the ***SETPOINTS\MONITORING\DC SUP. MONITOR*** path. There are three sets of settings; one for each of the zones. The settings allow you to:

- Enable or disable the function for each zone
- Set a lower voltage limit for each zone
- Set an upper voltage limit for each zone
- Set a time delay for each zone
- Set an inhibition signal for each zone

16.2.2 DC SUPPLY MONITOR LOGIC

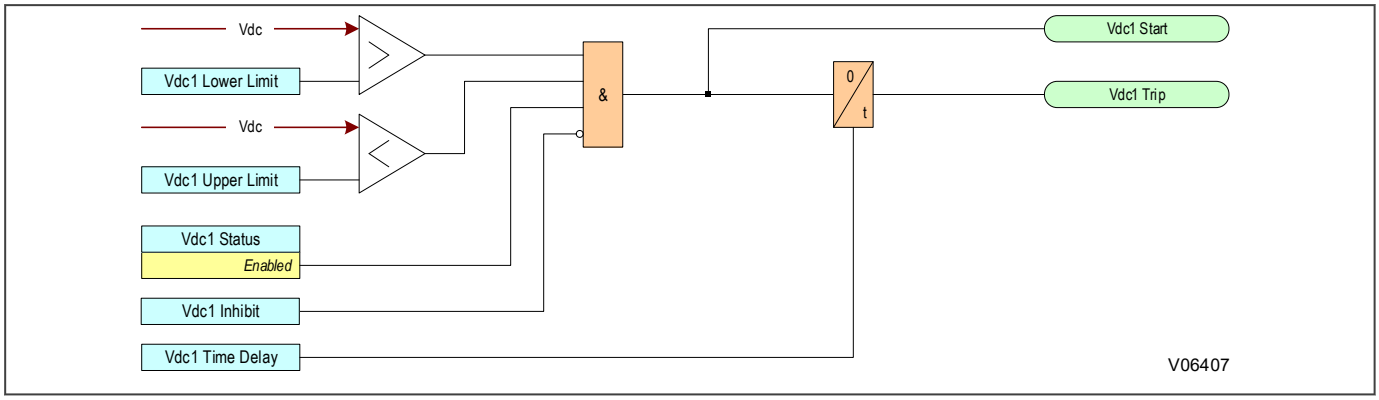

Figure 166: DC supply monitor logic

The diagram above shows the DC supply monitoring logic for stage 1 only. Stages 2 and 3 are identical in principle.

The logic function will work when the ***VdcX Function*** setting value is set to `Enabled` and the DC Supply Monitoring inhibit signal (***VdcX Inhibit***) is low. Being X from 1 to 3.

If the auxiliary supply voltage (Vdc) exceeds the lower limit AND falls below the upper limit, the voltage is in the unhealthy zone and a ***VdcXStart*** signal is generated.

The ***VdcX Trip*** signals from all stages are OR'd together to produce an alarm signal ***DC Supply Fail***.

The DC Supply magnitude can be checked under ***MEASUREMENTS\DC SUPPLY SUPV.\C SUPPLY MAG*** path.

The ***VdcX Start*** and ***VdcX Trip*** signals for all stages and the ***DC Supply Fail*** signal can be checked under ***TARGETS*** path when the signals are active and at any time (active or not active) under ***RECORDS\EVENTS*** path.

The signals ***VdcX Start*** and ***VdcX Trip*** signals for all stages and the ***DC Supply Fail*** signal are for monitoring purposes and can be checked under TARGETS path when active and under ***RECORDS\EVENTS*** path when an event have been raised for those signals.

VdcX Start, ***VdcX Trip*** and ***DC Supply Fail*** signals can used to configure an LED or an output to raise an alarm (if needed) using the Multilin Agile Flexlogic Equation Editor.

16.3 VOLTAGE TRANSFORMER SUPERVISION

The Voltage Transformer Supervision (VTS) function is used to detect failure of the AC voltage inputs to the protection. This may be caused by voltage transformer faults, overloading, or faults on the wiring, which usually results in one or more of the voltage transformer fuses blowing.

If there is a failure of the AC voltage input, the IED could misinterpret this as a failure of the actual phase voltages on the power system, which could result in unnecessary tripping of a circuit breaker.

The VTS logic is designed to prevent such a situation by detecting voltage input failures, which are NOT caused by power system phase voltage failure, and automatically blocking associated voltage dependent protection elements.

The following scenarios are possible with respect to the failure of the VT inputs.

- Loss of one or two-phase voltages
- Loss of all three-phase voltages

Note:
VT supervision functionality is only available for products with CT & VT inputs (P14D only)

16.3.1 LOSS OF ONE OR TWO PHASE VOLTAGES

If the power system voltages are healthy, no Negative Phase Sequence (NPS) voltage will be present. If however, one or two of the AC voltage inputs are missing, there will be Negative Phase Sequence voltage present, even if the actual power system phase voltages are healthy. VTS works by detecting Negative Phase Sequence (NPS) voltage without the presence of Negative Phase Sequence current. So if there is NPS voltage present, but no NPS current, it is certain that there is a problem with the voltage transformers and a VTS block should be applied to voltage dependent protection functions to prevent maloperation. The use of negative sequence quantities ensures correct operation even where three-limb or V-connected VTs are used.

16.3.2 LOSS OF ALL THREE PHASE VOLTAGES

If all three voltage inputs are lost, there will be no Negative Phase Sequence quantities present, but the device will see that there is no voltage input. If this is caused by a power system failure, there will be a step change in the currents. However, if this is not caused by a power system failure, there will be no change in any of the currents. So if there is no measured voltage on any of the three phases and there is no change in any of the currents, this indicates that there is a problem with the voltage transformers and a VTS block should be applied to voltage dependent protection functions to prevent maloperation.

16.3.3 VTS IMPLEMENTATION

VTS is implemented under t*HE* ***SETPOINT***S/***CONTROL***/***VT SUPERVISION*** path.

The following settings are relevant for VT Supervision:

- ***Function***: The selection of `Alarm`, `Latched Alarm` or `Configurable` setting enables the VTS function. When the `Alarm` function is selected, and the VTS operates, the Alarm LED will flash, and will self-reset, when the operating conditions are cleared. When the `Latched Alarm` function is selected, and the VTS operates, the Alarm LED will flash during the VTS operating condition, and will be steady lit after the conditions are cleared. The Alarm LED can be cleared by issuing a reset command.
  When the `Configurable` function is selected, the dedicated Alarm LED will not turn on automatically. Any configurable LED can be set as an alarm using Flexlogic operands related to VTS operation under the ***SETPOINT***/***DEVICE***/***FRONT PANEL***/***PROG.*** LED.

For all Function setting options (`Alarm`, `Latched Alarm`, `Configurable`), the relay output selected (if any) will operate following the VTS operation behaviour.

- ***Time Delay***: This setting can be used to avoid fuse failure detection in case of sudden loss of voltage when the current is zero (breaker remains in open condition) and the transient negative sequence voltage appears.
- ***Operate Delay***: This setting determines the operate time-delay upon detection of a VTS condition.
- ***Relay O/P X***: All available relay outputs (except the watchdog relay output) from 2 to X (where X is the number outputs, which is Cortec dependent), can be selected to operate upon VTS operation. The operation of these relay outputs is programmed by the user.
- ***VT Ntrl Wire Det***: This setting enables and disables the VT neutral wire open detection function. When the VT is connected in Delta, do not enable this function because there is no neutral wire for Delta connected VT.
- ***VT Ntrl Wire PKP***: This setting specifies the pickup level of the 3rd harmonic of 3V0 signal, for the VT neutral wire open detection logic to pick up. % is calculated based on the Phase VT Secondary.

VTS is only enabled during a live line condition to prevent operation under dead system conditions.

16.3.4 VTS LOGIC

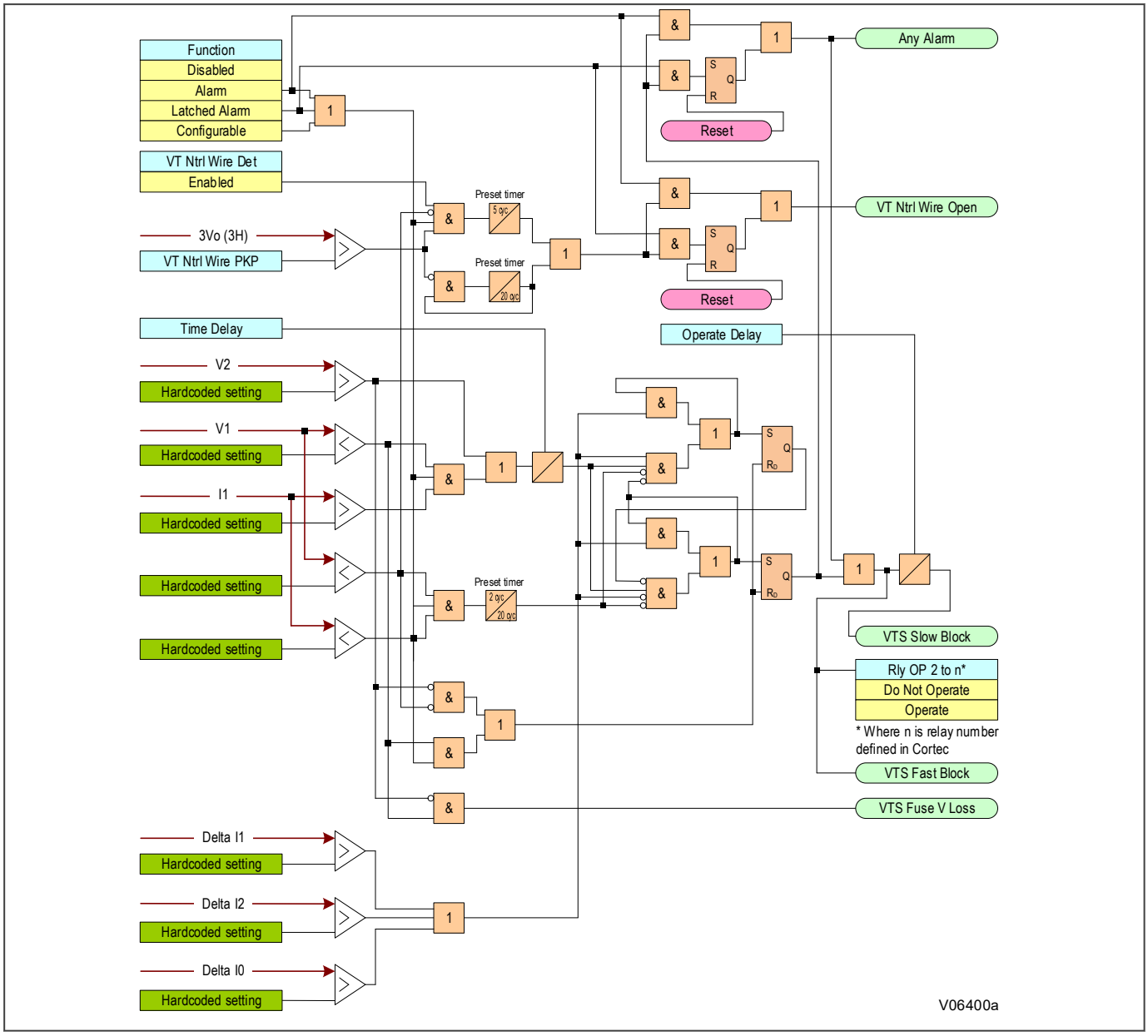

Figure 167: VTS logic

As can be seen from the diagram, the VTS function is inhibited if the phase current changes over the period of 2 cycles.

16.4 CURRENT TRANSFORMER SUPERVISION

The Current Transformer Supervision function (CTS) is used to detect failure of the AC current inputs to the protection. This may be caused by internal current transformer faults, overloading, or faults on the wiring. If there is a failure of the AC current input, the protection could misinterpret this as a failure of the actual phase currents on the power system, which could result in maloperation. Also, an open circuit in the AC current circuits can cause dangerous CT secondary voltages to be generated.

Note:
CT supervision functionality is only available in P14D & P14N products.

16.4.1 CTS IMPLEMENTATION

The Multilin Agile IED provides a CT Supervision element that uses three distinct checks that can be enabled or disabled individually once the overall function is enabled. These three checks are the sequence check, differential check, and symmetry check.

The sequence check is the first check and should ideally be used for CT supervision. The sequence check uses zero sequence current, zero sequence voltage, and earth current. This check may not be an option if the earth current is not available, voltages are not available, or not connected in wye configuration to be able to calculate zero sequence voltage. If voltages are not available or they are available but in delta configuration, the differential check can be used.

The differential check uses calculated zero sequence current and earth current to calculate differential current. If earth current is not available, the symmetry check can be used.

The symmetry check operates by calculating a quotient or a ratio of minimum current over maximum current and comparing against a threshold. This function should be set appropriately considering possible minimum and maximum load currents occurred in various scenarios.

To further enhance the security of these functions and not block overcurrent in case of fault events, an additional maximum load current supervision is added where the maximum of the phase current magnitudes I_{max} must be less than the maximum load current.

16.4.2 CTS LOGIC

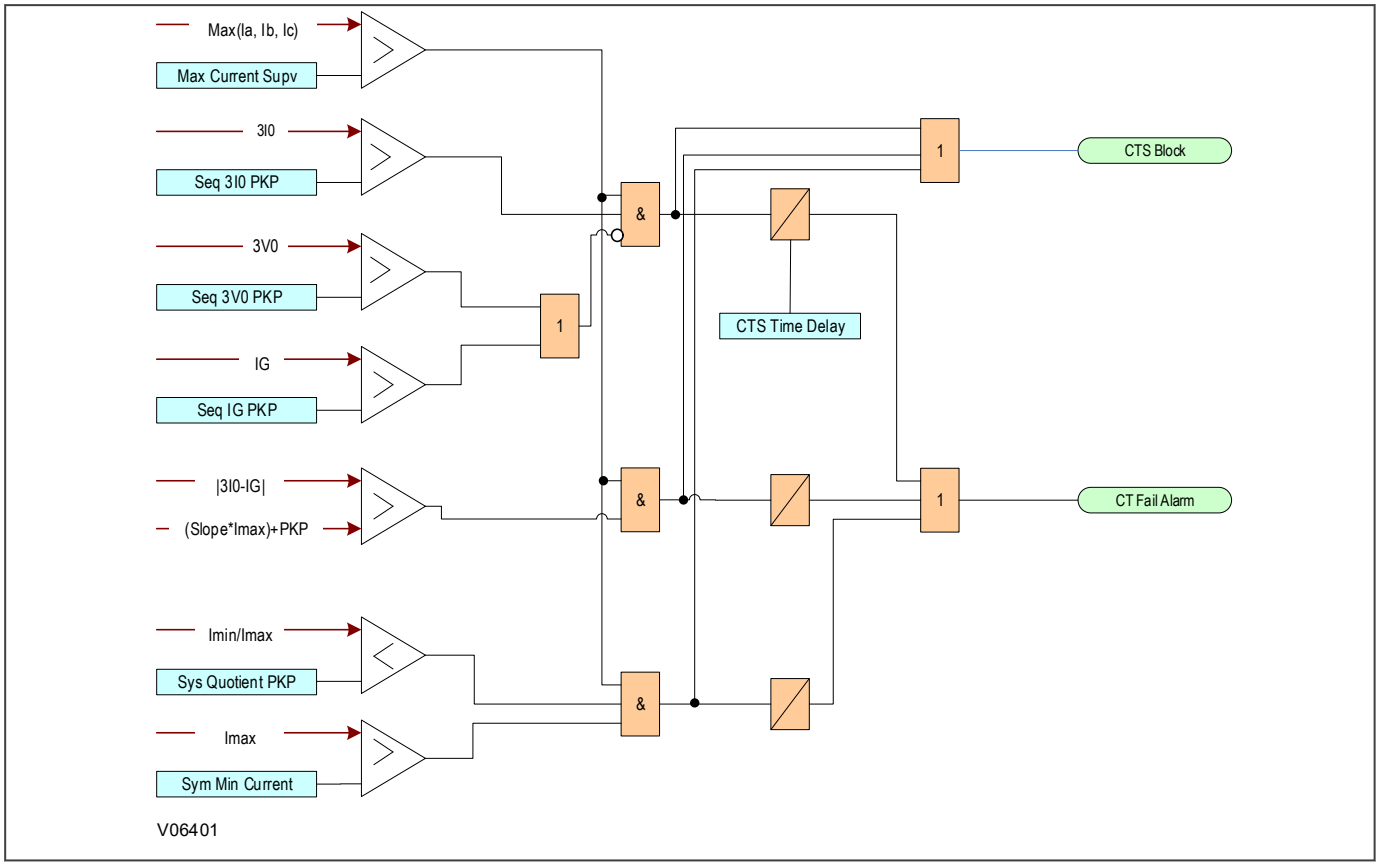

Figure 168: CTS logic

16.4.3 APPLICATION NOTES

16.4.3.1 SETTING GUIDELINES

Sequence Check: The earth current input for the sequence check must come from a core balance CT or a transformer neutral point earthing CT. The residual earth input method should not be used for sequence check.

Differential Check: The CT Supervision element earth current input must come from a core balance CT. Transformer neutral point earthing or the residual earth input method should not be used for the differential check.

If CT Supervision is used for blocking instantaneous current protection elements, the pickup delay should be coordinated to allow blocking of the fastest current element.

16.5 TRIP CIRCUIT SUPERVISION

In most protection schemes, the trip circuit extends beyond the IED enclosure and passes through components such as links, relay contacts, auxiliary switches and other terminal boards. Such complex arrangements may require dedicated schemes for their supervision.

There are two distinctly separate parts to the trip circuit; the trip path, and the trip coil. The trip path is the path between the IED enclosure and the CB cubicle. This path contains ancillary components such as cables, fuses and connectors. A break in this path is possible, so it is desirable to supervise this trip path and to raise an alarm if a break should appear in this path.

The trip coil itself is also part of the overall trip circuit, and it is also possible for the trip coil to develop an open-circuit fault.

This product supports a number of trip circuit supervision (TCS) schemes.

> *Note:*
> *Multilin Agile IEDs have two dedicated opto inputs for TCS purposes: Opto-input 4 and Opto-input 5. Refer to Inputs/Outputs Connections in the Technical Specifications chapter for more details.*

16.5.1 TRIP CIRCUIT SUPERVISION SCHEME 1

This scheme provides supervision of the trip coil with the CB open or closed, however, it does not provide supervision of the trip path whilst the breaker is open. The CB status can be monitored when a self-reset trip contact is used. However, this scheme is incompatible with latched trip contacts, as a latched contact will short out the TCS opto-input for a time exceeding the recommended Delayed Dropout (DDO) timer setting of 400 ms, and therefore does not support CB status monitoring. If you require CB status monitoring, further opto-inputs must be used.

> *Note:*
> *A 52a CB auxiliary contact follows the CB position. A 52b auxiliary contact is the opposite.*

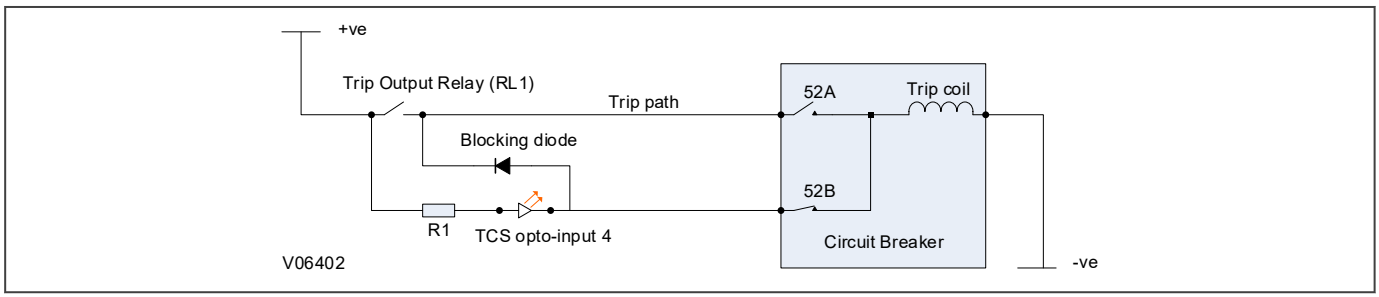

Figure 169: TCS scheme 1

When the CB is closed, supervision current passes through the TCS opto-input, blocking diode and trip coil. When the CB is open, supervision current flows through the TCS opto-input and into the trip coil via the 52b auxiliary contact. This means that *Trip Coil* supervision is provided when the CB is either closed or open, however *Trip Path* supervision is only provided when the CB is closed. No supervision of the trip path is provided whilst the CB is open (pre-closing supervision). Any fault in the trip path will only be detected on CB closing, after a 400 ms delay.

16.5.1.1 RESISTOR VALUES

The supervision current is a lot less than the current required by the trip coil to trip a CB. The TCS opto-input limits this supervision current to less than 10 mA. If the TCS opto-input were to be short-circuited however, it could be possible for the supervision current to reach a level that could trip the CB. For this reason, a resistor R1 is often

used to limit the current in the event of a short-circuited TCS opto-input. This limits the current to less than 60 mA. The table below shows the appropriate resistor value and voltage setting for this scheme.

Trip Circuit Voltage	Resistor R1
24/27	620 Ohms at 2 Watts
30/34	820 Ohms at 2 Watts
48/54	1.2 kOhms at 5 Watts
110/125	2.7 kOhms at 10 Watts
220/250	5.2 kOhms at 15 Watts

16.5.1.2 FLEXLOGIC EQUATION EDITOR FOR TCS SCHEME 1

The TCS opto-input can be used, after being passed through a 400 ms delayed dropout timer and inverted, to drive a normally open output relay, which in turn can be used to drive alarm equipment. The signal can also be configured to drive a latching programmable LED.

The timer operates as soon as the TCS opto-input is energised, but will take 400 ms to dropout/reset in the event of a trip circuit failure. The 400 ms delay prevents a false alarm due to voltage dips caused by faults in other circuits or during normal tripping operation when the TCS opto-input is shorted by a self-reset trip contact.

The 50 ms delay on pickup timer prevents false LED and user alarm indications during the power up time, following a voltage supply interruption.

16.5.2 TRIP CIRCUIT SUPERVISION SCHEME 2

This scheme provides supervision of the trip coil with the breaker open or closed but does not provide pre-closing supervision of the trip path. However, using two TCS opto-inputs (opto-input 4 and opto-input 5) allows the IED to correctly monitor the circuit breaker status since they are connected in series with the CB auxiliary contacts. This is achieved by assigning one opto-input to the 52a contact and another TCS opto-input to the 52b contact. Provided the ***CB Status Input*** setting under t*HE* ***SETPOINT/SYSTEM/CB SETUP*** path is set to `Both 52A and 52B`, and the ***CB Aux 3ph (52A)*** and ***CB Aux 3ph (52B)*** settings are set to the corresponding TCS opto-inputs, the IED will correctly monitor the status of the breaker. This scheme is also fully compatible with latched contacts as the supervision current will be maintained through the 52b contact when the trip contact is closed.

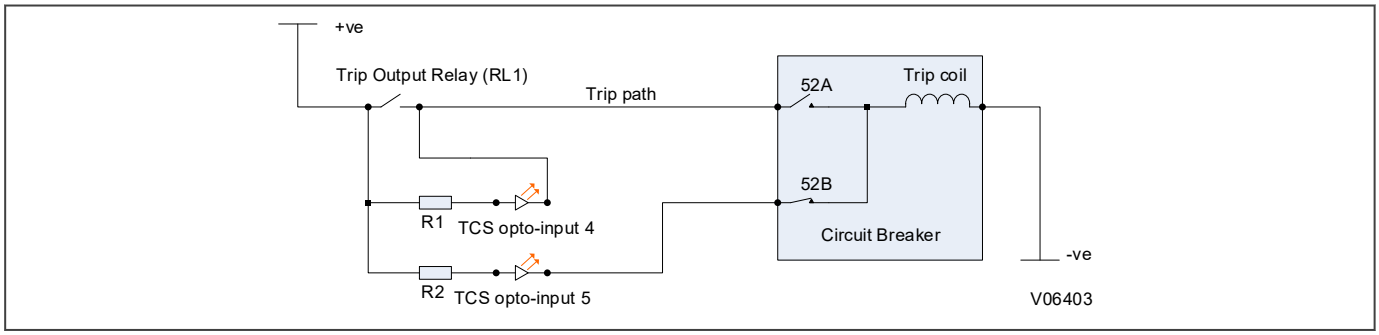

Figure 170: TCS scheme 2

When the breaker is closed, supervision current passes through TCS opto-input 4 and the trip coil. When the breaker is open current flows through TCS opto-input 5 and the trip coil. No supervision of the trip path is provided whilst the breaker is open. Any fault in the trip path will only be detected on CB closing, after a 400 ms delay.

16.5.2.1 RESISTOR VALUES

As with scheme 1, optional resistors R1 and R2 can be added to prevent tripping of the CB if either TCS opto-input is shorted. The table below shows the appropriate resistor value and voltage setting for this scheme.

Trip Circuit Voltage	Resistor R1 and R2
24/27	620 Ohms at 2 Watts
30/34	820 Ohms at 2 Watts
48/54	1.2 kOhms at 5 Watts
110/125	2.7 kOhms at 10 Watts
220/250	5.2 kOhms at 15 Watts

16.5.2.2 FLEXLOGIC EQUATION EDITOR FOR TCS SCHEME 2

In this TCS scheme, both TCS opto-inputs must be low before a trip circuit fail alarm is given.

The TCS opto-inputs can be used, after being passed through a 400 ms delayed dropoff timer and inverted, to drive a normally open output relay, which in turn can be used to drive the alarm equipment. The signal can also be configured to drive a latching programmable LED.

The timer operates as soon as both TCS opto-inputs are energised, but will take 400 ms to drop off/reset in the event of a trip circuit failure. The 400 ms delay prevents a false alarm due to voltage dips caused by faults in other circuits or during normal tripping operation when the TCS opto-inputs are shorted by a self-reset trip contact.

The 50 ms delay on pickup timer prevents false LED and user alarm indications during the power up time, following a voltage supply interruption.

16.5.3 TRIP CIRCUIT SUPERVISION SCHEME 3

TCS Scheme 3 is designed to provide supervision of the trip coil with the breaker open or closed. It provides pre-closing supervision of the trip path. Since only one TCS opto-input is used, this scheme is not compatible with latched trip contacts. If you require CB status monitoring, further opto-inputs must be used.

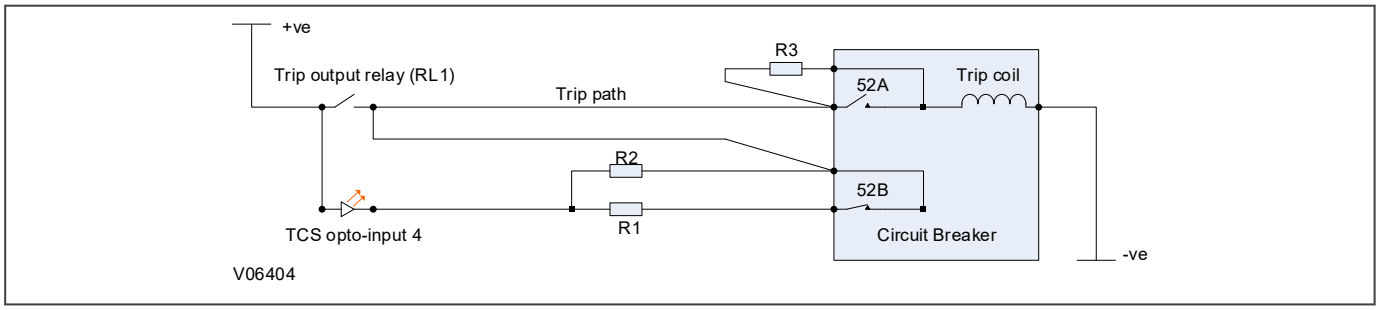

Figure 171: TCS scheme 3

When the CB is closed, supervision current passes through the TCS opto-input 4, resistor R2 and the trip coil. When the CB is open, current flows through theTCS opto-input 4, resistors R1 and R2 (in parallel), resistor R3 and the trip coil. The supervision current is maintained through the trip path with the breaker in either state, therefore providing pre-closing supervision.

16.5.3.1 RESISTOR VALUES

As with TCS schemes 1 and 2, resistors R1 and R2 are used to prevent false tripping, if the TCS opto-input is accidentally shorted. However, unlike the other two schemes, this scheme is dependent on the position and value of these resistors. Removing them would result in incomplete trip circuit monitoring. The table below shows the resistor values and voltage settings required for satisfactory operation.

Trip Circuit Voltage	Resistor R1 and R2	Resistor R3
24/27	620 Ohms at 2 Watts	330 Ohms at 5 Watts
30/34	820 Ohms at 2 Watts	430 Ohms at 5 Watts
48/54	1.2 kOhms at 5 Watts	620 Ohms at 10 Watts

Trip Circuit Voltage	Resistor R1 and R2	Resistor R3
110/125	2.7 kOhms at 10 Watts	1.5 k Ohms at 15 Watts
220/250	5.2 kOhms at 15 Watts	2.7 k Ohms at 25 Watts

16.5.3.2 FLEXLOGIC EQUATION EDITOR FOR TCS SCHEME 3

he TCS opto-input can be used, after being passed through a 400 ms delayed dropoff timer and inverted, to drive a normally open output relay, which in turn can be used to drive the alarm equipment. The signal can also be configured to drive a latching programmable LED.

The timer operates as soon as the TCS opto-input is energised, but will take 400 ms to drop off/reset in the event of a trip circuit failure. The 400 ms delay prevents a false alarm due to voltage dips caused by faults in other circuits or during normal tripping operation when the TCS opto-input is shorted by a self-reset trip contact.

The 50 ms delay on the pickup timer prevents false LED and user alarm indications during the power up time, following a voltage supply interruption.

16.5.4 TRIP CIRCUIT SUPERVISION SCHEME 4

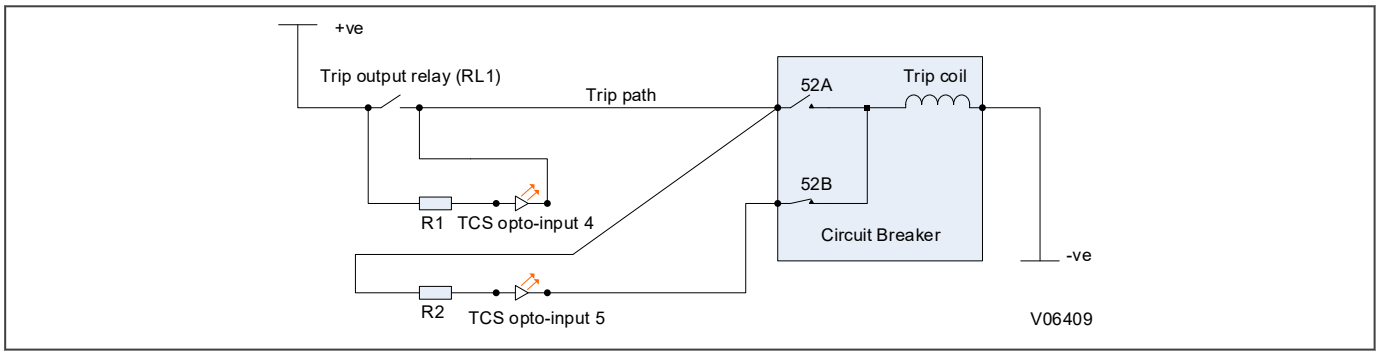

Figure 172: TCS scheme 4

Under normal non-fault conditions, a current of 2 mA flows through one of the following paths:

a) Post Close Supervision: When the CB is in a closed state, the current flows through R1, TCS opto-input 4, Contact 52A and the trip coil.

b) Pre-close Supervision: When the CB is in an open state, the current flows through R1, TCS opto-input 4, R2, TCS opto-input 5, Contact 52B and the trip coil.

c) Momentary Tripping with Self-reset Contact: When a self-reset trip contact is in a closed state, the current flows through the trip contact, contact 52A and the trip coil.

d) Tripping with Latched Contact: When a latched trip contact is used and when it is in a closed state, the current flows through the trip contact, Contact 52A, the trip coil, then changing to the path trip contact, R2, Contact 52B, TCS opto-input 5, and the trip coil.

A current of 2 mA through the Trip Coil is insufficient to cause operation of the Trip Contact, but large enough to energise the TCS opto-inputs. Under this condition both of the opto-inputs will output logic 1, which inverts to 0, so the output relay (TCS health) will be open and the LED will be off. If a break occurs in the trip circuit, the current ceases to flow, resulting in both TCS opto-inputs outputting logic 0, which inverts to 1. This will close the output relay and set the LED On.

16.5.4.1 RESISTOR VALUES

The TCS opto-inputs sink a constant current of 2 mA.The values of external resistors R1 and R2 are chosen to limit the current to a maximum of 60 mA in the event that a TCS opto-input becomes shorted. The values of these resistors depend on the trip circuit voltage.

Trip Circuit Voltage	Resistor R1 and R2 (ohms)
24/27	620 Ohms at 2 Watts
30/34	820 Ohms at 2 Watts
48/54	1.2 kOhms at 5 Watts
110/125	2.7 kOhms at 10 Watts
220/250	5.2 kOhms at 15 Watts

For the momentary tripping condition, none of the opto-inputs are energised. To tide over this normal CB operation, a dropout time delay of about 400 ms is added in the Flexlogic Equation Editor.

16.5.4.2 FLEXLOGIC EQUATION EDITOR FOR TCS SCHEME 4

In this TCS scheme, both TCS opto-inputs must be low before a trip circuit fail alarm is given.

The TCS opto-inputs can be used, after being passed through a 400 ms delayed dropoff timer and inverted, to drive a normally open output relay, which in turn can be used to drive the alarm equipment. The signal can also be configured to drive a latching programmable LED.

The timer operates as soon as both TCS opto-inputs are energised, but will take 400 ms to drop off/reset in the event of a trip circuit failure. The 400 ms delay prevents a false alarm due to voltage dips caused by faults in other circuits or during normal tripping operation when the TCS opto-inputs are shorted by a self-reset trip contact.

The 50 ms delay on pickup timer prevents false LED and user alarm indications during the power up time, following a voltage supply interruption.

CHAPTER 17

DIGITAL I/O AND FLEXLOGIC EQUATION EDITOR

17.1 CHAPTER OVERVIEW

This chapter introduces the Enervista Flexlogic Equation Editor (Flexlogic Equation Editor & Logic Designer), and describes the configuration of the digital inputs and outputs. It provides an outline of Flexlogic concepts and the Flexlogic Equation Editor.

This chapter contains the following sections:

Chapter Overview 376

Configuring Digital Inputs and Outputs 377

Flexlogic Equation Editor 378

Configuring the Opto-Inputs 380

Fixed Function LEDs 381

Programmable LEDs 382

Default LEDs 384

Virtual Inputs 387

GOOSE Subscribe (Remote Inputs, RI DPS, GOOSE Analog) and Remote Output 389

IED Outputs 390

Virtual Outputs 391

17.2 CONFIGURING DIGITAL INPUTS AND OUTPUTS

Configuration of the digital inputs and outputs in this product is very flexible. You can use a combination of settings and programmable logic to customise them to your application. You can access some of the settings using the keypad on the front panel, but you will need a computer running the EnerVista Configuration software to configure the device (if needed).

The Enervista Configuration Software includes an Enervista Flexlogic Equation Editor (Flexlogic Equation Editor & Logic Designer) to be used for Flexlogic configuration (if needed). The Flexlogic Equation Editor of the device lets you allocate inputs and outputs according to your specific application. It also allows you to apply attributes to some of the signals such as a dropoff delay for an output contact.

In this product, digital inputs and outputs that are configurable are:

- Optically isolated digital inputs (opto-inputs). These can be used to monitor the status of associated plant
- Relay output contacts. These can be used for purposes such as initiating the tripping of circuit breakers, providing alarm signals, etc
- Programmable LEDs and Pushbuttons (Cortec dependent)
- IEC 61850 GOOSE Subscribe (Remote Inputs, RI DPS, GOOSE Analog) and Remote Outputs (Cortec dependent). These are only provided on products that have been specified for connection to an IEC 61850 system. The details of the GOOSE are presented in the documentation on IEC 61850

17.3 FLEXLOGIC EQUATION EDITOR

The product is supplied with Enervista Flexlogic Equation Editor (Flexlogic Equation Editor & Logic Designer).

Flexlogic Equation Editor is built around a concept called the FlexLogic Operand. These FlexLogic operands encompasses all of the digital signals which are used in the Flexlogic Equation Editor. The input to the Flexlogic Equation Editor is any combination of the status of the digital input signals from the opto-inputs, virtual inputs, virtual outputs, relay outputs, GOOSE subscribe (remote inputs, remote inputs DPS, GOOSE analog) and remote outputs, any outputs of the protection, control and monitoring elements, non-volatile latches, Flex Elements and any internal signal available as a FlexLogic Operand.

The Flexlogic Equation Editor provides the ability to develop custom schemes to suit customer applications, if the factory-programmed default Flexlogic Equation Editor CID files, including the default settings and schemes do not meet the required needs. Default CID files including default settings and default Flex Equation Editor schemes are programmed before the product leaves the factory. These default CID files including default Flexlogic Equation Editor schemes, have been designed to suit typical applications, and if these schemes suit customer requirements you do not need to take any action. However, if there is a need to change the existing default Flexlogic Equation Editor, or to implement new custom scheme logic, it can be done using the Flexlogic Equation Editor contained in the EnerVista Configuration software.

The Flexlogic Equation Editor consists of components such as logic gates and timers, which combine and condition digital signals.

The logic gates can be programmed to perform a range of different logic functions. The number of inputs to a logic gate are not limited. The timers can be used either to create a programmable delay or to condition the logic outputs. Relay output contacts and programmable LEDs have dedicated conditioners.

The following diagram shows how the Flexlogic Equation Editor interacts with the rest of the IED.

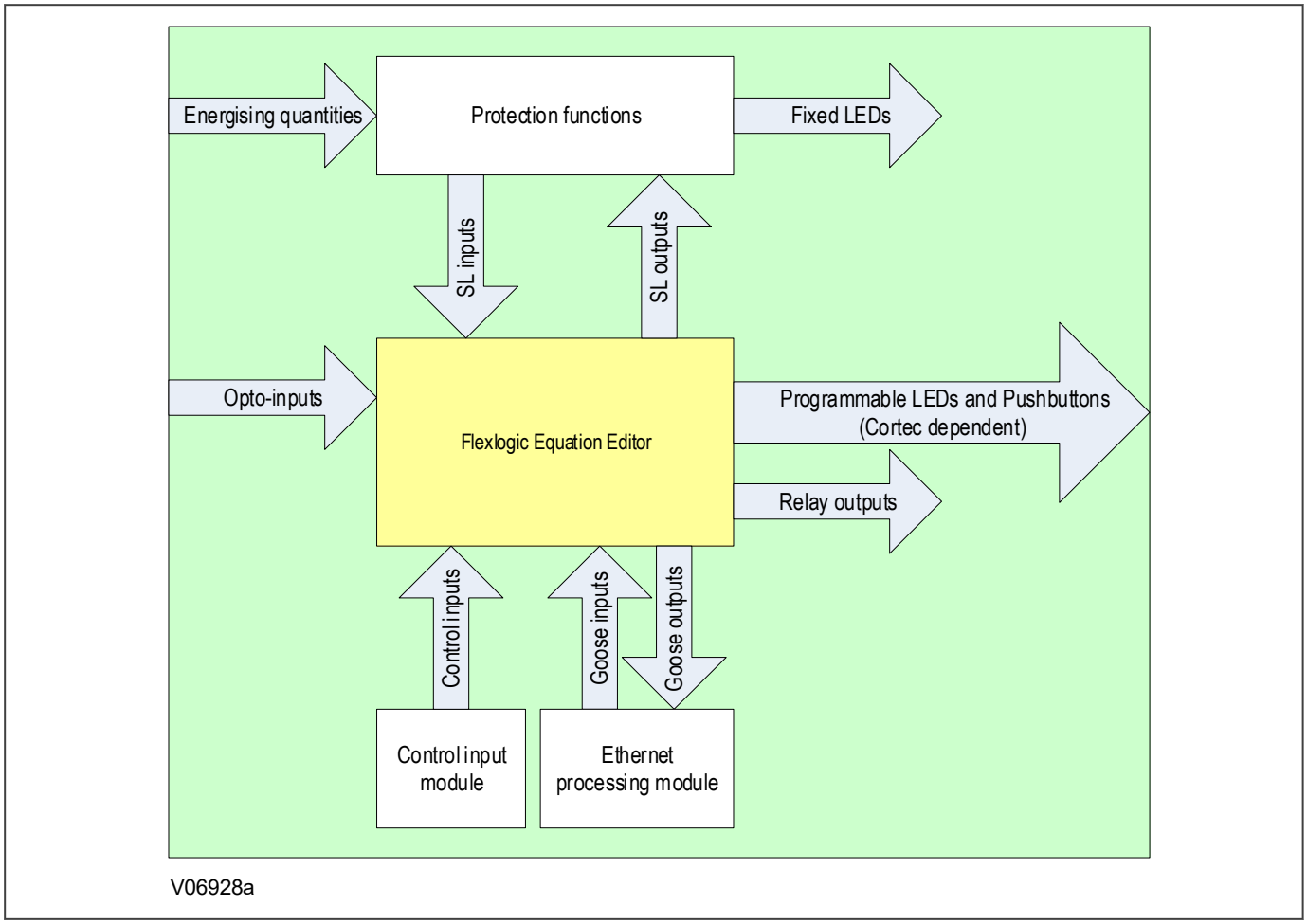

Figure 173: Flexlogic equation editor scheme logic interfaces

17.4 CONFIGURING THE OPTO-INPUTS

The number of optically isolated status inputs (opto-inputs) depends on the specific model supplied (Cortec dependent). The use of the opto-inputs will depend on the application. The opto-input assignments for each particular application is achieved through IED settings, via HMI or EnerVista Configuration software. The opto-inputs can also be used for certain applications as inputs in the Flexlogic Equation Editor via EnerVista Configuration software.

Depending on the type of Cortec Binary Input/Output options selection the settings applicable to the opto-inputs are different. For details of input and output boards and settings configuration, refer to the "IO Population - Type of Boards (usage and configuration) Appendix.

- For some Cortec options there is just one Opto-Config selection available. Global Nominal V and Characteristic settings can be configurable at ***SETPOINTS\INPUTS\OPTO INPUTS\OPTO CONFIG.*** Global Nominal Voltage and Characteristic settings are applicable for Normal Binary opto-inputs only and not for TCS opto-inputs. TCS opto-inputs have a fixed DC voltage level of 5V, with no hysteresis.
- For other Cortec options there are two Opto-Config selections available. Global Nominal V 1 and Characteristic 1 settings can be configurable at ***SETPOINTS\INPUTS\OPTO INPUTS\OPTO CONFIG 1***. Global Nominal V 2 and Characteristic 2 settings can be configurable at ***SETPOINTS\INPUTS\OPTO INPUTS\OPTO CONFIG 2***. The selection of the Opto Config X that applies to each group of opto-inputs can be done at ***SETPOINTS\INPUTS\OPTO INPUTS\CONFIG SELECTION.***
- Independently of the Cortec selection:

Global Nominal setting allows the set up of the appropriate energising voltage range value.

The ***Characteristic*** setting is used to set the pickup/dropout ratios of the input signals. By default, the pickup threshold is 80% of the minimum DC input value. This value can be changed to other available thresholds if required. The available thresholds for the Characteristic setting are, Standard 80%, 75% and 70%. Dropout is fixed at 20% of Nominal Voltage.

Each opto-input has a programmable ***Name*** and ***Debounce Time*** setting at ***SETPOINTS\INPUTS\OPTO INPUTS \OPTO I/P X*** path, to prevent false operation from induced voltage. The name allows the user to assign a configurable alphanumeric name to an input for diagnostic, setting and event recording purposes. The ***Debounce Time*** is adjustable by the user per manufacturer specifications.

17.5 FIXED FUNCTION LEDS

Four fixed-function LEDs on the left-hand side of the front panel indicate the following conditions

- Trip (Red) switches ON when the IED issues a trip signal. The Trip LED is a latched LED that can be reset after the fault condition is cleared
- Alarm (Orange) flashes when the IED registers an alarm. This may be triggered by a fault, event or maintenance record.For non-latched Alarms the LED flashes until the alarm conditions disappear, then it switches OFF. For Latched Alarms the LED flashes until the alarm conditions disappear, then changes to constantly ON. When the alarms are cleared, the LED switches OFF
- Out of service (Red) is ON when the IEDs functions are unavailable
- Healthy (Green) is ON when the IED is in correct working order, and should be ON at all times. It goes OFF if the unit's self-tests show there is an error in the hardware or software. The state of the healthy LED is reflected by the watchdog contacts at the back of the unit

Note:
*Any latched Fixed Function LED indicator (Trip LED and Alarm LED when Alarm is latched) can be reset using a **RESET** command, once the condition has been cleared. The **RESET** command can be initiated in a number of ways: by pressing the **Clear/Reset** key for a few seconds, by selecting the **Up** hotkey (configured for RESET) at the default product display in the HMI (for 20TE), by a configurable operand that can be configured in the menu **SETPOINTS\DEVICE\RESETTIN**G or by a remote device via a communication channel.*

17.6 PROGRAMMABLE LEDS

The device has programmable LEDs (Cortec dependent).

All the programmable LEDs on the unit are tri-colour. These can be illuminated red, green, or amber.

The Trigger (Red) and Trigger (Green) selection (any FlexLogic Operand) and the LED type (Self-reset or Latched) can be set, either through the IED corresponding settings at ***SETPOINTS\DEVICE\FRONT PANEL\PROG. LED \LED (n)*** menu.

> *Note:*
> *Any programmable LED indicator, when set to Latched, can be reset with a **RESET** command, once the condition has been cleared.*

> *Note:*
> *The **RESET** command can be initiated in a number of ways, by pressing the **Clear/Reset** key for a few seconds, by selecting the **Up** hotkey (configured for **RESET**) at the default product display in the HMI (for 20TE), by a configurable operand that can be configured in the **SETPOINTS\DEVICE\RESETTING** menu or by a remote device via a communication channel.*

Setpoints\Device\Front Panel\Prog. LED

LED	Range
LED x Name	Up to 13 alphanumeric characters
This setpoint is used to select the LED name by choosing up to 13 alphanumeric characters.	
LED x Trigger (RED)	Off, Any FlexLogic operand
This setpoint requires the assigning of the FlexLogic operand to trigger the selected RED LED upon operation.	
LED x Trigger (Green)	Off, Any FlexLogic operand
This setpoint requires the assigning of the FlexLogic operand to trigger the selected Green LED upon operation.	

For a Tricolour LED, two Operands can be mapped via Trigger (Red & Green) settings or through the PSL.

- When Trigger (RED) or Input 1 (PSL) is high, the Red LED will illuminate.
- When Trigger (Green) or Input 2 (PSL) is high, the Green LED will illuminate,
- When both are high, the Amber LED will illuminate.

> *Note:*
> *If the Trigger setting is Off or the Input Operand is not mapped in the PSL, it should be considered as Low (0).*

For example:

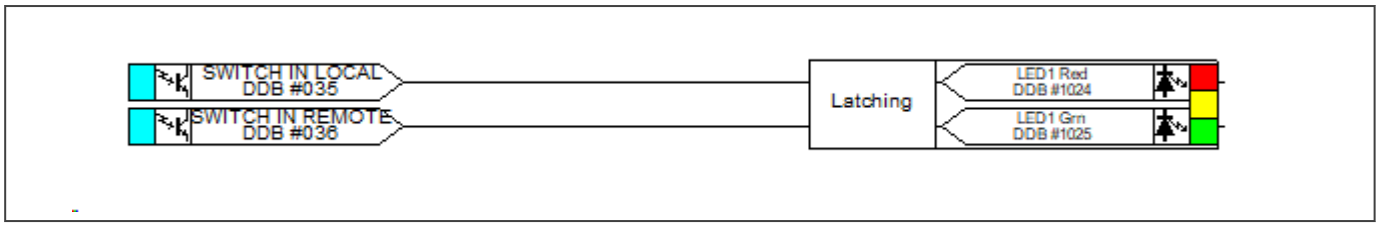

Input	Trigger Configuration	State	LED Output
Local Binary input	Red Trigger	High (1)	Red
Remote Binary input	Green Trigger	Low (0)	

Input	Trigger Configuration	State	LED Output
Local Binary input	Red Trigger	Low (0)	Green
Remote Binary input	Green Trigger	High (1)	

Input	Trigger Configuration	State	LED Output
Local Binary input	Red Trigger	High (1)	Yellow
Remote Binary input	Green Trigger	High (1)	

Input	Trigger Configuration	State	LED Output
Local Binary input	Red Trigger	High (1)	Red
Not Configured	Green Trigger	Low (0)	

Input	Trigger Configuration	State	LED Output
Not Configured	Red Trigger	Low (0)	Green
Remote Binary input	Green Trigger	High (1)	

LED	Range
LED x Type	Self-Reset, Latched
This setpoint defines the type of LED indication as either Self-Reset (LED resets after the FlexLogic operand drops out), or Latched (LED stays latched upon dropping out of the FlexLogic operand).	

17.7 DEFAULT LEDS

The device has programmable LEDs (Cortec dependent).

All the programmable LEDs on the unit are tri-colour. These can be illuminated red, green, or amber.

The Trigger (Red) and Trigger (Green) selection (any FlexLogic Operand) and the LED type (Self-reset or Latched) can be set, either through the IED corresponding settings at ***SETPOINTS\DEVICE\FRONT PANEL\PROG. LED \LED (n)*** menu.

> *Note:*
> *Any programmable LED indicator, when set to Latched, can be reset with a **RESET** command, once the condition has been cleared.*

> *Note:*
> *The **RESET** command can be initiated in a number of ways, by pressing the **Clear/Reset** key for a few seconds, by selecting the **Up** hotkey (configured for **RESET**) at the default product display in the HMI (for 20TE), by a configurable operand that can be configured in the **SETPOINTS\DEVICE\RESETTING** menu or by a remote device via a communication channel.*

Setpoints\Device\Front Panel\Prog. LED

LED	Range
LED x Name	Up to 13 alphanumeric characters
This setpoint is used to select the LED name by choosing up to 13 alphanumeric characters.	
LED x Trigger (RED)	Off, Any FlexLogic operand
This setpoint requires the assigning of the FlexLogic operand to trigger the selected RED LED upon operation.	
LED x Trigger (Green)	Off, Any FlexLogic operand
This setpoint requires the assigning of the FlexLogic operand to trigger the selected Green LED upon operation.	

For a Tricolour LED, two Operands can be mapped via Trigger (Red & Green) settings or through the PSL.

- When Trigger (RED) or Input 1 (PSL) is high, the Red LED will illuminate.
- When Trigger (Green) or Input 2 (PSL) is high, the Green LED will illuminate,
- When both are high, the Amber LED will illuminate.

> *Note:*
> *If the Trigger setting is Off or the Input Operand is not mapped in the PSL, it should be considered as Low (0).*

All LEDs, including LED 1 to LED 4, are fully configurable. By default, LED 1 to LED 4 are assigned to common status indications. However, users can reconfigure them as needed. The default status indicators for these LEDs are as follows:

LED 1: TRIP (Red Colour, Latched Type)

Trip (Red) LED can be triggered by the operation of protection, control or monitoring elements with functions selected as "Trip" or "Latched Trip". This will be linked to the ***Any Trip*** FlexOperand. This indicator always latches, and a reset command must be initiated to allow the latch to be reset.

LED 2: ALARM (Orange Colour, Self-Reset Type)

Alarm (Orange) LED flashes when the IED registers an alarm that can be triggered by the operation of protection, control or monitoring elements with functions selected as "Alarm" or "Latched Alarm", fault, event or maintenance record. This will be linked to the ***Any Alarm*** FlexOperand. This indicator latches, or not, depending on the setting

selected. If latched, a reset command must be initiated to allow the latch to be reset. For non-latched alarms the LED flashes until the alarm conditions disappear, then it switches OFF. For latched alarms the LED flashes until the alarm conditions disappear, then changes to constantly ON. When the alarms are cleared, the LED switches OFF.

> *Note:*
> *Only LED2, which is by default configured for Alarm, exhibits flashing/blinking behaviour when the **Any Alarm** operand becomes true or when the relay is Not in Service. If any other LED is assigned for alarm indication by setting its trigger to the **Any Alarm** operand, the flashing/blinking behaviour will not be available. Instead, the LED will simply turn On or Off, depending on the operand state.*

LED 3: OUT OF SERVICE (Red Colour, Self-Reset Type)

Any LED assigned for the Out of Service indication will turn ON under the following conditions:

- When the relay is not in simulation mode, the LED will turn ON when the operand ***Out Of Service*** becomes True.

When the relay is in simulation mode, the LED will always turn ON, regardless of the state of the ***Out Of Service*** operand.

LED 4: HEALTHY (Green Colour, Self-Reset Type)

Healthy (Green) is ON when the IED is in correct working order, and should be ON at all times. It goes OFF if the unit's self-tests show there is an error in the hardware or software. The state of the Out of Service and Healthy LED is reflected by the watchdog contacts at the back of the unit.

20TE Front Panel with Four LEDs:

LED Number	Name	Trigger (Red)	Trigger (Green)	Type
LED1	Trip	Any Trip	OFF	Latched
LED2	Alarm	Any Alarm	Any Alarm	Self-Reset
LED3	Out of Service	Out of Service	OFF	Self-Reset
LED4	Healthy	OFF	Healthy	Self-Reset
LED5	LED 5	OFF	OFF	Self-Reset
LED6	LED 6	OFF	OFF	Self-Reset
LED7	LED 7	OFF	OFF	Self-Reset
LED8	LED 8	OFF	OFF	Self-Reset

30TE Front Panel with 26 LEDs:

LED Number	Name	Trigger (Red)	Trigger (Green)	Type
LED1	Trip	Any Trip	OFF	Latched
LED2	Alarm	Any Alarm	Any Alarm	Self-Reset
LED3	Out of Service	Out of Service	OFF	Self-Reset
LED4	Healthy	OFF	Healthy	Self-Reset
LED5(20)	LED 5(20)	OFF	OFF	Self-Reset
LED21(26)	PB 1(6)	OFF	PB 1 ON (PB 6 ON)	Self-Reset

20TE Front Panel with Four LEDs:

LED Number	Name	Trigger (Red)	Trigger (Green)	Type
LED1	Trip	Any Trip	OFF	Latched
LED2	Alarm	Any Alarm	Any Alarm	Self-Reset

LED3	Out of Service	Out of Service	OFF	Self-Reset
LED4	Healthy	OFF	Healthy	Self-Reset
LED5	Pickup	OFF	Any Start	Self-Reset
LED6	Stopped	OFF	Motor Stopped	Self-Reset
LED7	Starting	Motor Starting	OFF	Self-Reset
LED8	Running	OFF	Motor Running	Self-Reset

30TE Front Panel with 26 LEDs:

LED Number	Name	Trigger (Red)	Trigger (Green)	Type
LED1	Trip	Any Trip	OFF	Latched
LED2	Alarm	Any Alarm	Any Alarm	Self-Reset
LED3	Out of Service	Out of Service	OFF	Self-Reset
LED4	Healthy	OFF	Healthy	Self-Reset
LED5	Pickup	OFF	Green	Self-Reset
LED6	Stopped	OFF	Motor Stopped	Self-Reset
LED7	Starting	Motor Starting	OFF	Self-Reset
LED8	Running	OFF	Motor Running	Self-Reset
LED9	Start Inhibit	Start Inhibit	OFF	Self-Reset
LED10	Ground Fault	IN1>1 GF Trip OP	OFF	Self-Reset
LED11	Thermal Trip	Thermal Trip OP	OFF	Self-Reset
LED12 - LED20	LED 13(20)	OFF	OFF	Self-Reset
LED21 - 26	PB 1(6)	OFF	PB 1 ON (PB 6 ON)	Self-Reset

17.8 VIRTUAL INPUTS

The Multilin Agile IED is equipped with 128 Virtual Inputs that can be individually programmed to respond to input signals from the keypad or from communications protocols. This has the following advantages over opto-inputs only:

- The number of logic inputs can be increased without introducing additional hardware.
- Logic functions can be invoked from a remote location over a single communication channel.
- The same logic function can be invoked both locally via opto-input or front panel keypad, and/or remotely via communications.
- Panel switches can be replaced entirely by virtual switches to save cost and wiring.

All Virtual Input operands are defaulted to `OFF` (logic 0) unless the appropriate input signal is received.

The following setting options at ***SETPOINTS\INPUTS\VIRTUAL INPUTS\VIRTUAL I/P (N)*** are available:

FUNCTION

Range: `Disabled`, `Enabled`

Default: `Disabled`

If this setting is set to `Disabled`, the virtual input will be forced to `OFF` (logic 0) regardless of any attempt to alter the input. If set to `Enabled`, the input operates as shown on the logic diagram below, and generates output FlexLogic operands in response to received input signals and the applied settings.

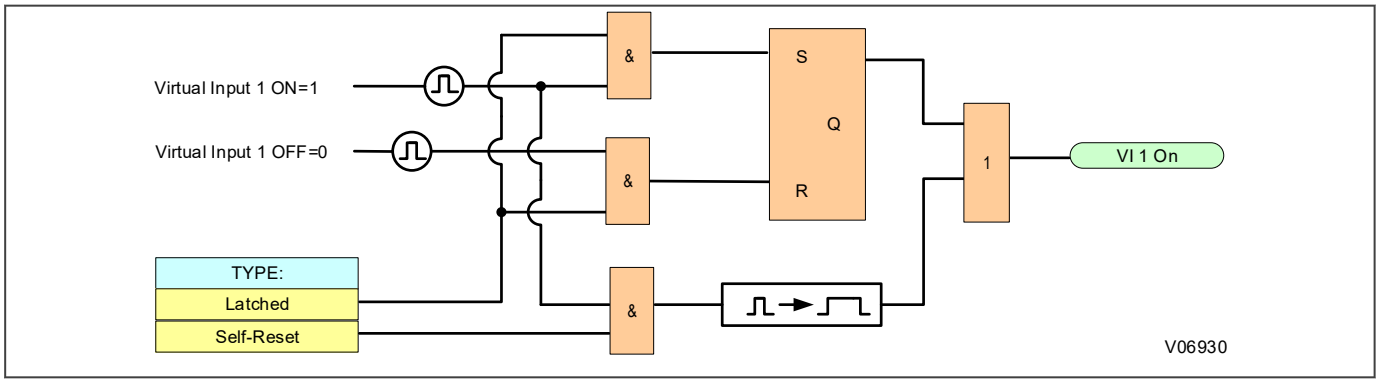

Figure 174: Virtual inputs scheme logic

NAME

Range: Up to 13 alphanumeric characters

Default: `VI(n)`

An alphanumeric name may be assigned to a Virtual Input for diagnostic, setting, and event recording purposes.

TYPE

Range: `Latched`, `Self-reset`

Default: `Latched`

There are two types of operation: self-reset and latched. If the Virtual Input ***Type*** setting is set to `Self-Reset` when the input signal transits from `OFF` to `ON` the output operand will be set to `ON` for only one evaluation of the FlexLogic equations, then return to `OFF`. If set to `Latched`, the virtual input sets the state of the output operand to the same state as the most recent received virtual input.

Note:
The self-reset operating mode generates the output operand for a single evaluation of the FlexLogic equations (i.e., a pulse of one protection pass). If the operand is to be used anywhere other than internally in a FlexLogic equation, it will likely have to be lengthened in time. A FlexLogic timer with a delayed reset time can perform this function.

17.9 GOOSE SUBSCRIBE (REMOTE INPUTS, RI DPS, GOOSE ANALOG) AND REMOTE OUTPUT

IEC 61850 is a Cortec dependent feature for all models.

The Multilin Agile IED supports 8 GOOSE transmissions, with up to 64 digital/analogue items per GOOSE. Any digital/analogue value existing in the 61850 logical nodes can be assigned to a transmission item.

The Multilin Agile IED supports 32 GOOSE receptions, with up to 128 digital items that can be mapped into any of the 128 remote inputs, up to 16 double digital items that can be mapped into any of the 16 remote Inputs DPS and up to 32 analogue items that can be mapped into any of the 32 Analogue inputs (24 float and 8 integer).

The FlexLogic operand named Remote GOOSE RX Offline indicates if configured GOOSE receptions are all working. The FlexLogic operand "Remote GOOSE RX Offline" works as follows:

'1' when any of configured GOOSE receptions are not being received

'0' if all configured GOOSE reception dataset is being received properly

The IEC 61850 GOOSE transmission and reception for Multilin Agile IEDs should be configured using the IEC61850 Configuration tool available in EnerVista Configuration software.

Remote inputs provide a means of exchanging digital state information between Ethernet networked devices supporting IEC 61850. Remote inputs that create FlexLogic operands at the receiving relay are extracted from GOOSE messages originating in remote devices. Remote input (n) must be programmed to replicate the logic state of a specific signal from a specific remote device for local use.

The 128 remote inputs, 16 remote input DPS (double point remote inputs) and the 32 Remote GOOSE RX Offline FlexLogic operands are available to be selected as inputs for any configurable digital signal in the IED settings and in the Flexlogic Equation Editor.

The ***Name*** and ***Default State*** of each remote input can be configured in the ***Remote I/P (n)*** menu at the ***SETPOINTS\DEVICE\COMMUNICATIONS\GOOSE SUBSCRIBE\REMOTE INPUTS*** path.

The ***Name*** and ***Default State*** of each double point remote input can be configured at the ***RI DPS (n)*** menu at the ***SETPOINTS\DEVICE\COMMUNICATIONS\GOOSE SUBSCRIBE\RI DPS*** path.

The ***Float Name***, ***Float ID***, ***Default Mode***, ***Default Value***, ***Units and PU Base*** of each goose analogue input can be configured at the ***GOOSE Analog (n)*** menu at the ***SETPOINTS\DEVICE\COMMUNICATIONS\GOOSE SUBSCRIBE\GOOSE ANALOG*** path.

The ***Name*** and ***Indication*** (FlexLogic Operand trigger) for each remote output can be configured at ***Remote O/P (n)*** menu at the ***SETPOINTS\OUTPUTS\REMOTE OUTPUTS*** path.

The actual values of all GOOSE Subscribe related inputs (remote inputs, double point remote inputs analogue inputs) and remote outputs are available under ***DEVICE STATUS\COMMUNICATIONS*** under each specific header (***REMOTE INPUTS***, or ***RI DPS***, or ***GOOSE ANALOG***, or ***REMOTE OUTPUTS***) depending on the value required.

17.10 IED OUTPUTS

The Multilin Agile IED is equipped with a number of relays outputs specified at the time of ordering.

On the first slot (D for 20TE or F for 30TE) of any Cortec option, the first three relay outputs (RL1, RL2 and RL3) are normally open (NO) general-purpose contacts designated for tripping, opening and closing. The rest of the relay outputs are general-purpose relay outputs for signalling. The (Critical Fail) is a normally closed (NC) contact used as watchdog for any ordering option.

For more details, refer to the Input/Output Connections section in the Technical Specifications chapter. For details of input and output boards and settings configuration, refer to the "IO Population - Type of Boards (usage and configuration) Appendix.

The first output relay (RELAY 1-TRIP) in the IED is a NO relay that can be used for Trip Coil monitoring and is designated for tripping the breaker. The relay is energised upon operation of any element with setpoint ***Function*** set to Trip. The relay can be customised by changing the ***Mode*** and adding triggers to the Operate setting or blocking signals to the ***Inhibit*** setting under the ***SETPOINTS\OUTPUTS\RELAY OUTPUTS\RELAY 1-TRIP*** menu. This relay output is programmed internally for tripping the breaker, and it cannot be changed, disabled, or replaced by any other relay.

Additional relay outputs can be selected to operate as well from each protection, control, or monitoring element, selecting the relay output to operate through the settings menu for each element.

All relay outputs settings can be modified at the ***SETPOINT\OUTPUTS\RELAY OUTPUTS*** path, at ***RELAY 1-TRIP*** menu for the first output relay and ***RELAY O/P (n)*** menus for the rest of the relay outputs. The watchdog is not configurable, and it will not appear in the relay output settings.

The behaviour of the relay output contacts can be modified by choosing different operating Mode including `Pickup`, `Dropoff`, `Dwell`, `Pulse`, `Pickup/Dropoff`, `Straight-Through`, `Latching` options.

17.10.1 ASSIGNING IED OUTPUTS

The relay contact action can be controlled either through the device settings at the ***SETPOINT\OUTPUTS\RELAY OUTPUTS*** path, at ***RELAY 1-TRIP*** menu for the first output relay and ***RELAY O/P (n)*** menus for the rest of the relay outputs.

The configuration of the blocking signal to inhibit the action of the relay output contact is only possible to be done through the Inhibit setting under the ***SETPOINTS\OUTPUTS\RELAY OUTPUTS\RELAY 1-TRIP*** path for the first output relay and the ***SETPOINTS\OUTPUTS\RELAY OUTPUTS\RELAY O/P (n)*** path for the rest of the relay outputs.

The ***Mode*** assignment and setting of `Pickup` and `Dropoff` values is possible to be done both through the IED settings.

The signal that drives the output relays operation can be assigned through the IED ***Operate*** setting per each relay contact in the IED settings.

17.11 VIRTUAL OUTPUTS

The Multilin Agile IED has 256 virtual outputs that may be assigned via the Flexlogic Equation Editor. If not assigned, the virtual output is forced to OFF (Logic 0). Virtual outputs are resolved in each pass through the evaluation of the logic equations.

An ID may be assigned to each virtual output using the ***Name*** setting in the ***VIRTUAL O/P (N)*** menu at the ***SETPOINTS\OUTPUTS\VIRTUAL OUTPUTS*** path.

Any change of state of a virtual output can be logged as an event in the event recorder if programmed to do so selecting the ***Events*** setting to `Enabled` in the ***VIRTUAL O/P (N)*** menu at the ***SETPOINTS\OUTPUTS\VIRTUAL OUTPUTS*** path.

CHAPTER 18

COMMUNICATIONS

18.1 CHAPTER OVERVIEW

This product supports Substation Automation System (SAS), and Supervisory Control and Data Acquisition (SCADA) communication. The support embraces the evolution of communications technologies that have taken place since microprocessor technologies were introduced into protection, control, and monitoring devices which are now ubiquitously known as Intelligent Electronic Devices for the substation (IEDs).

As standard, all products support rugged serial communications for SCADA and SAS applications. By option, any product can support Ethernet communications for more advanced SCADA and SAS applications.

This chapter contains the following sections:

Chapter Overview 393

Communication Interfaces 394

Serial Communication 396

Standard Ethernet Communication 398

Redundant Ethernet Communication 399

Data Protocols 404

Time Synchronisation 437

18.2 COMMUNICATION INTERFACES

Multilin Agile products have a number of standard and optional communication interfaces. The standard and optional hardware and protocols are summarised below:

Port	Availability	Physical Layer	Use	Data Protocols
Front	Standard	USB	Local settings Firmware update SNTP (*) TFTP (*) SFTP (*) SSH (*)	Modbus TCP, DNP3oE, IEC 61850 Ed.2 (*)
Rear serial port 1 (COM1)	Standard	RS485	SCADA Remote settings IRIG-B	Modbus RTU, DNP3 Serial, IEC 60870-5-103
Rear serial port 2 (COM2) (*)	Optional (*)	RS485	SCADA Remote settings	Modbus RTU, DNP3 Serial, IEC 60870-5-103
Rear Ethernet port 1 (ETH1) (*)	Optional (*)	Ethernet/copper (*) Ethernet/fibre (*)	SCADA (*) Remote settings Firmware update PTP SNTP (*) TFTP (*) SFTP (*) SSH (*)	Modbus TCP, DNP3oE, IEC 61850 Ed.2 (*)
Rear Ethernet ports 2 and 3 (ETH2, ETH3) (*)	Optional (*)	Ethernet/copper Ethernet/fibre (*)	SCADA (*) Remote settings Firmware update PTP SNTP (*) TFTP (*) SFTP (*) SSH (*) Configurable PRP/HSR/LLA (*)	Modbus TCP, DNP3oE, IEC 61850 Ed.2 (*)

Note:
The options marked with (*) are features which are Cortec dependent.
The rest of the options not marked with (*) are available for all ordering options.
See ordering options appendix for more details.

From now on the following nomenclature will be used to refer to the hardware-independent protocols implemented in this IED.

Modbus Protocol:

- Modbus for generic Modbus protocol references
- Modbus RTU for serial Modbus
- Modbus TCP for Modbus over Ethernet (TCP)

DNP 3.0 Protocol:

- DNP 3.0 for generic DNP 3.0 protocol references
- DNP3 Serial for serial DNP3 3.0
- DNP3oE for DNP 3.0 over Ethernet (TCP/UDP)

For hardware dependent protocols and standards, such as IEC 60870-5-103 (serial based protocol) and IEC 61850 (Ethernet based standard) the protocols will be named as per its IEC description.

18.3 SERIAL COMMUNICATION

The physical layer standards that are used for serial communications for SCADA purposes.

RS485 is similar to RS232 but for longer distances and it allows daisy-chaining and multi-dropping of IEDs.

It is important to note that these are not data protocols. They only describe the physical characteristics required for two devices to communicate with each other.

A full description of the RS485 is available in the published standard.

> *Note:*
> *It is recommended that any unused RS485 ports are disabled.*

18.3.1 EIA(RS)485 BIASING REQUIREMENTS

Biasing requires that the signal lines be weakly pulled to a defined voltage level of about 1 V. There should only be one bias point on the bus, which is best situated at the master connection point. The DC source used for the bias must be clean to prevent noise being injected.

> *Note:*
> *Some devices may be able to provide the bus bias, in which case external components would not be required.*

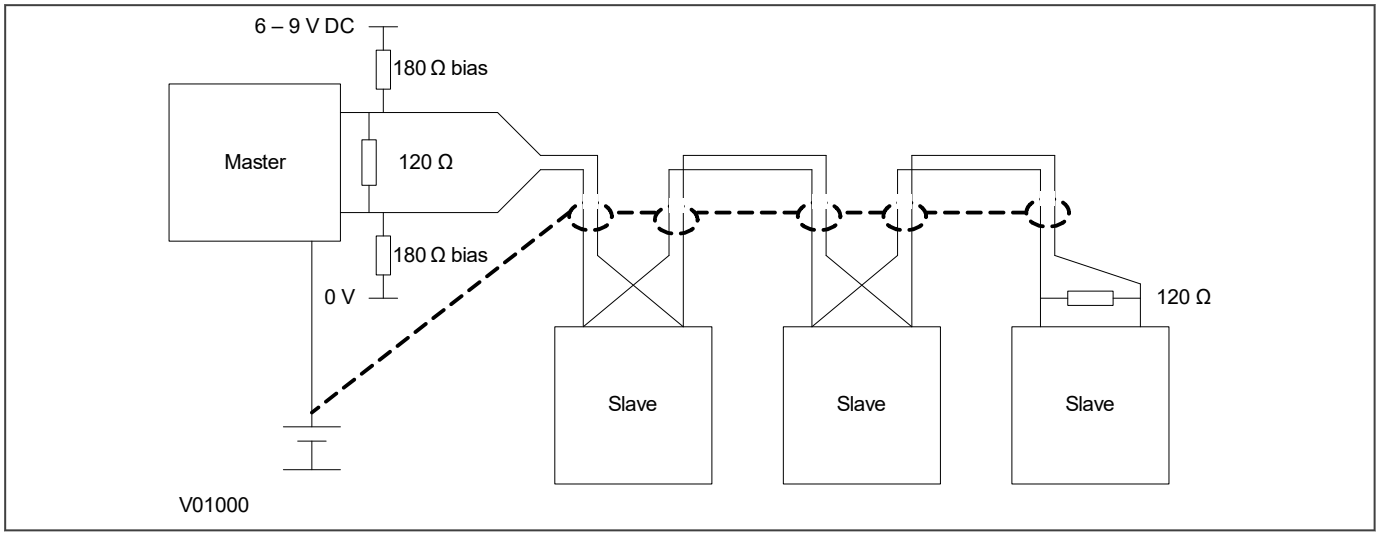

Figure 175: RS485 biasing circuit

> **Warning:**
> **It is extremely important that the 120 Ω termination resistors are fitted. Otherwise the bias voltage may be excessive and may damage the devices connected to the bus.**

18.3.2 EIA(RS)485 BUS

The RS485 two-wire connection provides a half-duplex, fully isolated serial connection to the IED. The connection is polarised but there is no agreed definition of which terminal is which. If the master is unable to communicate with the product, and the communication parameters match, then it is possible that the two-wire connection is reversed.

The RS485 bus must be terminated at each end with 120 Ω 0.5 W terminating resistors between the signal wires.

The RS485 standard requires that each device be directly connected to the actual bus. Stubs and tees are forbidden. Loop bus and Star topologies are not part of the RS485 standard and are also forbidden.

Two-core screened twisted pair cable should be used. The final cable specification is dependent on the application, although a multi-strand 0.5 mm2 per core is normally adequate. The total cable length must not exceed 1000 m. It is important to avoid circulating currents, which can cause noise and interference, especially when the cable runs between buildings. For this reason, the screen should be continuous and connected to ground at one end only, normally at the master connection point.

It may be necessary to bias the signal wires to prevent jabber. Jabber occurs when the signal level has an indeterminate state because the bus is not being actively driven. This can occur when all the slaves are in receive mode and the master is slow to turn from receive mode to transmit mode. This may be because the master is waiting in receive mode, in a high impedance state, until it has something to transmit. Jabber causes the receiving device(s) to miss the first bits of the first character in the packet, which results in the slave rejecting the message and consequently not responding. Symptoms of this are; poor response times (due to retries), increasing message error counts, erratic communications, and in the worst case, complete failure to communicate.

Multilin Agile IEDs are equipped with one or two rear serial communication ports, depending on Cortec selection. The RS485 port has settings for baud rate and parity. It is important that these parameters agree with the settings used on the computer or other equipment connected to this port. A maximum of 32 relays can be daisy-chained and connected to a DCS, PLC or a PC using the RS485 port.

Path: ***SETPOINTS\DEVICE\COMMUNICATIONS\RS485***

18.4 STANDARD ETHERNET COMMUNICATION

The Ethernet interface is required for either IEC 61850 and/or DNP3oE (IEC 61850 protocol availability must be selected at the time of order, see ordering options for more details). With either of these protocols, the Ethernet interface also offers communication with Modbus TCP for remote configuration and record extraction.

ETH1 port selection between fibre and copper (RJ45) hardware options is done in the Cortec when ordering the device.

Fibre optic connection is recommended for use in permanent connections in a substation environment, as it offers advantages in terms of noise rejection. The fibre optic port provides 100 Mbps communication and uses type LC connectors.

The device can also be connected to either a 10Base-T or a 100Base-TX Ethernet hub or switch using the RJ45 port. The port automatically senses which type of hub is connected. Due to noise and interference reasons, this connection type is only recommended for short-term connections over a short distance.

The pins on the RJ45connector are as follows:

Pin	Signal Name	Signal Definition
1	TXP	Transmit (positive)
2	TXN	Transmit (negative)
3	RXP	Receive (positive)
4	-	Not used
5	-	Not used
6	RXN	Receive (negative)
7	-	Not used
8	-	Not used

Note:
*The update of the Network Port settings at path: **SETPOINT/DEVICE/COMMUNICATIONS/ETHERNET/** should not be done off line in the CID and sent to the IED. The Ethernet settings update should be done on line directly in the IED, either entering the settings manually through the HMI, or by communications through the front USB port. 172.17.X.X/16 and 172.18.X.X/16 are reserved IP's.*

18.4.1 USB

The USB port is used for connecting computers locally for the purposes of transferring settings, measurements and records to and from the computer to the IED and to download firmware updates from a local computer to the IED.

The USB parameters are as follows:

IP Address: 172.16.0.3

IP Mask: 255.255.255.0

IP Gateway: 172.16.0.1

18.5 REDUNDANT ETHERNET COMMUNICATION

Redundancy is required where a single point of failure cannot be tolerated. It is required in critical applications such as substation automation. Redundancy acts as an insurance policy, providing an alternative route if one route fails.

The redundancy interface in the device provides two Ethernet ports (ETH2, ETH3), both of which are for the same physical medium (two copper, or two fibre).

Industry standard PRP (Parallel Redundancy Protocol) and HSR (High-availability Seamless Redundancy) protocols, LLA (Link Loss Alert) functionality as well as physical medium selection (copper or fibre) are all available in the ordering options.

PRP addresses the need for seamless switchover and zero recovery time in case of single network failure in substation automation networks. PRP achieve redundancy by using a combination of LAN duplication and frame duplication technique. Identical frames are sent on two completely independent networks that connect source and destination. Under normal circumstances both frames will reach destination and one of them will be sent up the OSI stack to the destination application, while the second one will be discarded.

HSR functionality, like PRP, addresses the need for seamless switchover and zero recovery time in case of single network failure in substation automation networks. A source node in HSR ring receives a frame from its upper layer and sends it over its two ports in different directions. Under normal circumstances (fault-free state) both identical frames will reach destination node within a certain interval and the first frame will be sent up the OSI stack to the destination application, while the second one will be discarded.

LLA (Link Loss Alert) detects a failure in the fibre link. When the link failure is detected, communication is switched to the standby port. When the primary port link detected is good, the communication is switched back to primary and the backup port goes back into standby mode.

Note:
172.17.X.X/16 and 172.18.X.X/16 are reserved IP's.

18.5.1 SUPPORTED PROTOCOLS AND FUNCTIONALITY

One of the key requirements of substation redundant communications is "bumpless" redundancy. This means the ability to transfer from one communication path to another without noticeable consequences. Standard protocols of the time could not meet the demanding requirements of network availability for substation automation solutions.

Switch-over times were unacceptably long. For this reason, companies developed proprietary protocols. More recently, however, standard protocols, which support bumpless redundancy (namely PRP and HSR) have been developed and ratified.

Multilin Agile version 02 onwards supports redundant Ethernet. Variants for each of the following protocols are available:

- PRP (Parallel Redundancy Protocol)
- HSR (High-availability Seamless Redundancy)
- LLA (Link Loss Alert functionality)

PRP and HSR are open standards, so their implementation is compatible with any standard PRP or HSR device respectively. PRP provides bumpless redundancy.

Note:
The protocol you require must be selected at the time of ordering.

18.5.2 PARALLEL REDUNDANCY PROTOCOL (PRP)

PRP (Parallel Redundancy Protocol) is defined in IEC 62439-3. PRP provides bumpless redundancy and meets the most demanding needs of substation automation. The PRP implementation of the REB is compatible with any standard PRP device.

PRP uses two independent Ethernet networks operating in parallel. PRP systems are designed so that there should be no common point of failure between the two networks, so the networks have independent power sources and are not connected together directly.

Devices designed for PRP applications have two ports attached to two separate networks and are called Doubly Attached Nodes (DAN). A DAN has two ports, one MAC address and one IP address.

The sending node replicates each frame and transmits them over both networks. The receiving node processes the frame that arrives first and discards the duplicate. Therefore there is no distinction between the working and backup path. The receiving node checks that all frames arrive in sequence and that frames are correctly received on both ports.

Devices such as printers that have a single Ethernet port can be connected to either of the networks but will not directly benefit from the PRP principles. Such devices are called Singly Attached Nodes (SAN). For devices with a single Ethernet port that need to connect to both LANs, this can be achieved by employing Ethernet Redundancy Boxes (sometimes abbreviated to RedBox). Devices with a single Ethernet port that connect to both LANs by means of a RedBox are known as Virtual DAN (VDAN).

The figure below summarises DAN, SAN, VDAN, LAN, and RedBox connectivity.

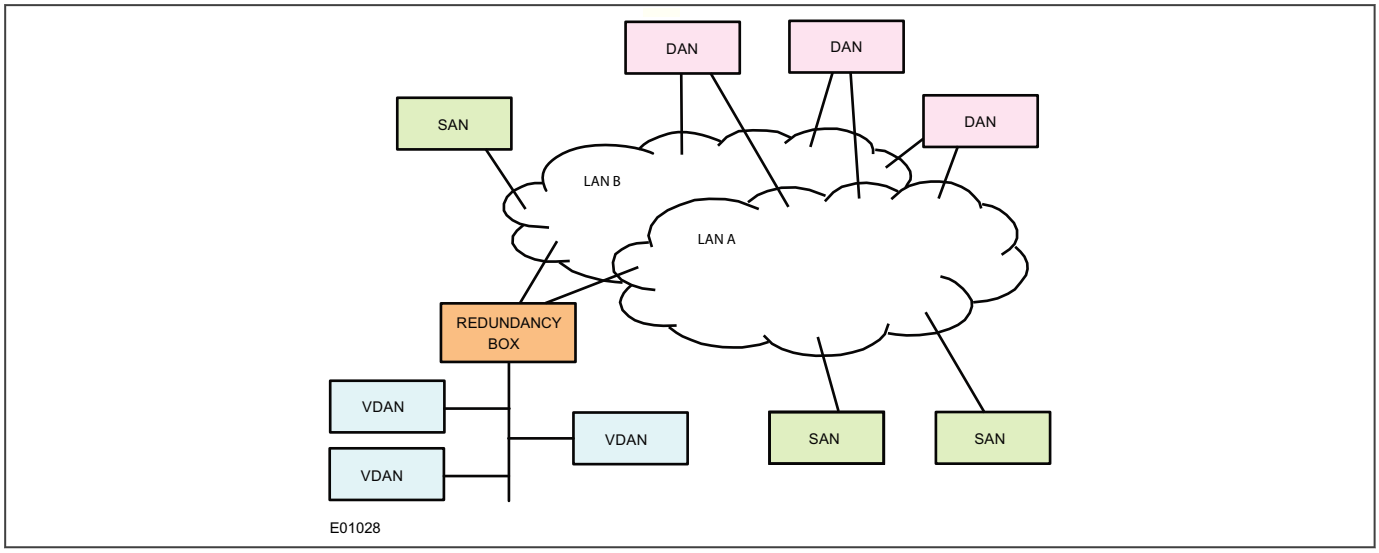

Figure 176: IED attached to separate LANs

In a DAN, both ports share the same MAC address so it does not affect the way devices talk to each other in an Ethernet network (Address Resolution Protocol at layer 2). Every data frame is seen by both ports.

When a DAN sends a frame of data, the frame is duplicated on both ports and therefore on both LAN segments. This provides a redundant path for the data frame if one of the segments fails. Under normal conditions, both LAN segments are working and each port receives identical frames.

The selection of PRP in the device can be done by selecting `PRP` at the ***ETH2 Operation*** setting at path: ***SETPOINTS\DEVICE\COMMUNICATIONS\ETHERNET\ETHERNET 2***

When set to PRP (Parallel Redundancy Protocol), ETH2 (PortA) and ETH3 (PortB) are the paired ports and use the same MAC address of ETH2 and combine information at the link layer. In this mode of operation both ports are connected two different switches on LANA and LANB. The relay processes the first received frame by forwarding the packet to upper layers and discards the duplicate frame, using the Link Redundancy Entity (LRE) service at layer 2. When received a frame from the network, LRE forwards the first received frame of a pair to the upper layers

after removing the RCT and discards the duplicate. When receiving a frame from the upper layers of the node, LRE appends the RCT and sends the frame through both ports. PRP main mode of operation is Duplicate Discard Mode and Duplicate Accept Mode is not supported.

18.5.3 HIGH-AVAILABILITY SEAMLESS REDUNDANCY (HSR)

HSR is standardized in IEC 62439-3 (clause 5) for use in ring topology networks. Similar to PRP, HSR provides bumpless redundancy and meets the most demanding needs of substation automation. HSR has become the reference standard for ring-topology networks in the substation environment. The HSR implementation of the redundancy Ethernet board (REB) is compatible with any standard HSR device.

HSR works on the premise that each device connected in the ring is a doubly attached node running HSR (referred to as DANH). Similar to PRP, singly attached nodes such as printers are connected via Ethernet Redundancy Boxes (RedBox).

The selection of HSR in the device can done by selecting HSR at the ***ETH2 Operation*** setting at path ***SETPOINTS \DEVICE\COMMUNICATIONS\ETHERNET\ETHERNET 2***

When set to HSR (High-availability Seamless Redundancy Protocol), ETH2 (PortA) and ETH3 (PortB) are the paired ports and use the same MAC address of ETH2. In this mode, all the participating devices are connected in ring topology and in normal condition (fault-free state) both identical frames will reach destination device within a certain interval and the first frame will be sent up the OSI stack to the destination application, while the second one will be discarded. When received a frame that is destined to the relay from network, the relay processes the first received packet by removing the HSR tag and discards the duplicate.

18.5.3.1 HSR MULTICAST TOPOLOGY

When a DANH is sending a multicast frame, the frame (C frame) is duplicated (A frame and B frame), and each duplicate frame A/B is tagged with the destination MAC address and the sequence number. The frames A and B differ only in their sequence number, which is used to identify one frame from the other. Each frame is sent to the network via a separate port. The destination DANH receives two identical frames, removes the HSR tag of the first frame received and passes this (frame D) on for processing. The other duplicate frame is discarded. The nodes forward frames from one port to the other unless it was the node that injected it into the ring.

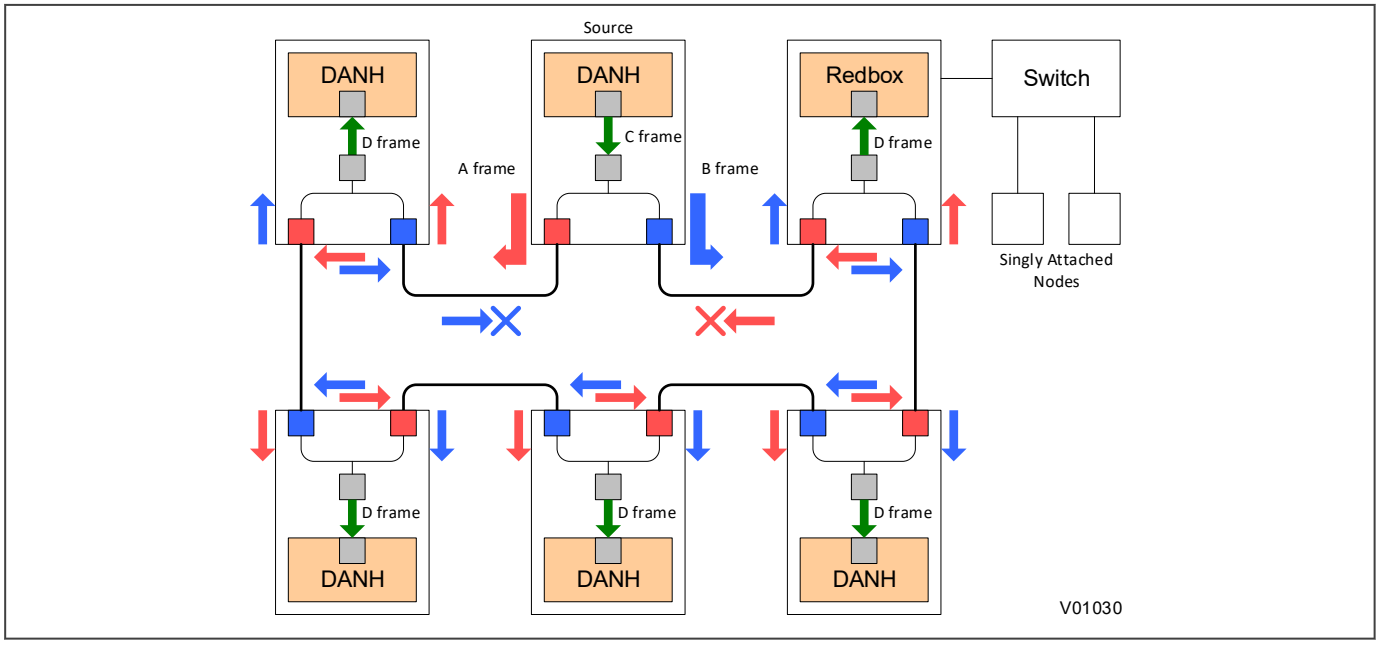

Figure 177: HSR multicast topology

Only about half of the network bandwidth is available in HSR for multicast or broadcast frames because both duplicate frames A & B circulate the full ring.

18.5.3.2 HSR UNICAST TOPOLOGY

With unicast frames, there is just one destination and the frames are sent to that destination alone. All non-recipient devices simply pass the frames on. They do not process them in any way. In other words, D frames are produced only for the receiving DANH. This is illustrated below.

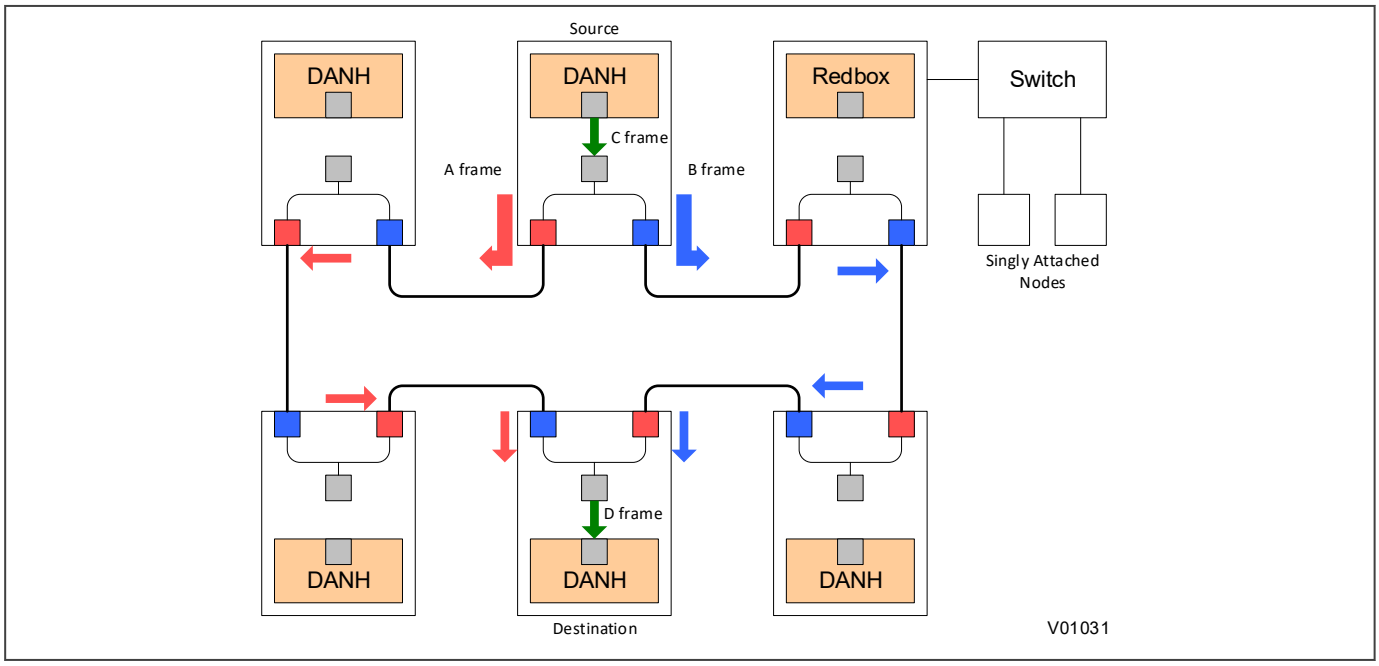

Figure 178: HSR unicast topology

For unicast frames, the whole bandwidth is available as both frames A & B stop at the destination node.

18.5.4 RSTP CONFIGURATION

The selection of RSTP in the device can found at the setting path ***SETPOINTS\DEVICE\COMMUNICATIONS \ETHERNET\ETHERNET 2***

	Default	Range	Step
Operation	Independent	Independent, LLA, PRP, HSR, RSTP	40
Bridge Priority	32768	0 ... 61440	4096
Specifies the switch (bridge) priority value. The bridge priority value is used along with the port MAC address to determine the root device in the network. Lower values mean higher priority. **Note:** *When assigning the bridge priority, it is recommended to configure the Ethernet switch as the root device of the network. This reduces the number of hops to reach all devices in the network.*			
RSTP Port 1 Priority	128	0 ... 240	16
This setting specifies the Network Port4 port RSTP priority to select as root port. The Lower the number means higher priority.			
RSTP Port 1 PathCost	200000	1 ... 2000000	1
This setting specifies the port cost value used for the switch to determine the forwarding path. The lower the value, the lower the cost and the preferred route.			
RSTP Port 2 Priority	128	0 ... 240	16
This setting specifies the Network Port5 port RSTP priority to select as root port. The lower the number means higher priority.			
RSTP Port 2 Path Cost	200000	0 ... 2000000	1

	Default	Range	Step
This setting specifies the port cost value used for the switch to determine the forwarding path. The lower the value, the lower the cost and the preferred route. **Note:** *The PTP feature is not functional on Network Ports with RSTP enabled.*			

18.5.4.1 RSTP CONFIGURATION

Path: ***STATUS\COMMUNICATIONS\RSTP***

	Default	Range
RSTP Port 1 State	Discarding	Discarding, Learning & Forwarding
This is the state of RSTP for Port 1 (Discarding, Learning & Forwarding)		
RSTP Port 2 State	Discarding	Discarding, Learning & Forwarding
This is the state of RSTP for Port 2 (Discarding, Learning & Forwarding)		

18.5.5 LINK LOSS ALERT FUNCTIONALITY (LLA)

LLA (Link Loss Alert) detects a failure in the fiber link. When the link failure is detected, communication is switched to the standby port. When the primary port link detected is good, the communication is switched back to primary and the backup port goes back into standby mode.

The selection of LLA in the device can be done by selecting `LLA` at the ***ETH2 Operation*** setting at ***SETPOINTS \DEVICE\COMMUNICATIONS\ETHERNET\ETHERNET 2***

When set to "LLA", ETH2 and ETH3 will use ETH2's MAC and IP address settings. In this mode ETH3 is in standby mode and is not actively communicate on the Ethernet network but will monitor its link. If ETH2's LLA detects a problem with the link, communication is switched to ETH3. ETH3 is, in effect, acting as a redundant or backup link to the network for ETH2. Once ETH2 detects that the link is good, communications automatically switches back to ETH2 and ETH3 switches back into standby mode.

18.6 DATA PROTOCOLS

The product supports a wide range of protocols to make them applicable to many industries and applications. The exact data protocols supported by a particular product depend on its chosen application, but the following table gives a list of the data protocols that are typically available.

SCADA data protocols

Data Protocol	Layer 1 Protocol	Description
Modbus	RS485, Ethernet	Standard for SCADA communications developed by Modicon.
IEC 60870-5-103	RS485	IEC standard for SCADA communications
DNP 3.0	RS485, Ethernet	Standard for SCADA communications developed by Harris. Used mainly in North America.
IEC 61850	Ethernet	IEC standard for substation automation. Facilitates interoperability.

The relationship of these protocols to the lower level physical layer protocols are as follows:

Data Protocols	Modbus RTU DNP3 Serial IEC 60870-5-103	Modbus TCP DNP3oE IEC 61850		
Data Link Layer	EIA(RS)485	Ethernet	USB	
Physical Layer	Copper			

18.6.1 IEC 60870-5-103

The specification IEC 60870-5-103 (Telecontrol Equipment and Systems Part 5 Section 103: Transmission Protocols), defines the use of standards IEC 60870-5-1 to IEC 60870-5-5, which were designed for communication with protection equipment

This section describes how the IEC 60870-5-103 standard is applied to Multilin Agile IEDs. It is not a description of the standard itself. The level at which this section is written assumes that the reader is already familiar with the IEC 60870-5-103 standard.

This section should provide sufficient detail to enable understanding of the standard at a level required by most users.

The IEC 60870-5-103 interface is a master/slave interface with the device as the slave device. The point map for the IEC 60870-5-103 is different from the one used by DNP 3.0 protocol.

Cause of Transmission

Cause of transmission is an unsigned integer and it shall take one of the values specified in the following tables:

In monitor direction

<1>	Spontaneous
<2>	Cyclic
<3>	Reset frame count bit (FCB)
<4>	Reset communication unit (CU)
<5>	Start/restart
<6>	Power on
<8>	Time synchronization
<9>	General interrogation
<10>	Termination of general interrogation

<20>	Positive ack of command
<21>	Nack of command

In control direction

<8>	Time synchronization
<9>	Initiation of general interrogation
<20>	General command

18.6.1.1 PHYSICAL CONNECTION AND LINK LAYER

There is just one option for IEC 60870-5-103:

- Rear serial ports 1 and 2 (*) for permanent SCADA connection via RS485

Note:
DNP3 Serial, IEC 60870-5-103 and Modbus RTU may not be enabled simultaneously on the RS485 serial port. But you may enable DNP3oE and be able to work with Modbus TCP on Ethernet and enable IEC 60870-5-103 on serial RS485.

The IED address and baud rate can be selected using the front panel menu or by a suitable application such as EnerVista Configuration.

Note:
The options marked with (*) are features which are Cortec dependent.
Those not marked with (*) are available for all ordering options.
See ordering options appendix for more details.

18.6.1.2 INITIALISATION

Whenever the device has been powered up, or if the communication parameters have been changed a reset command is required to initialise the communications. The device will respond to either of the two reset commands; Reset CU or Reset FCB (Communication Unit or Frame Count Bit). The difference between the two commands is that the Reset CU command will clear any unsent messages in the transmit buffer, whereas the Reset FCB command does not delete any messages.

The device will respond to the reset command with an identification message ASDU 5. The Cause of Transmission (COT) of this response will be either Reset CU or Reset FCB depending on the nature of the reset command. The content of ASDU 5 is described in the IEC 60870-5-103 section of the Menu Database, available from GE Vernova separately if required.

18.6.1.3 TIME SYNCHRONISATION

The time and date can be set using the time synchronization feature of the IEC 60870-5-103 protocol. The device will correct for the transmission delay as specified in IEC 60870-5-103. If the time synchronization message is sent as a send/confirm message then the device will respond with a confirm message. A time synchronization Class 1 event will be generated/produced whether the time-synchronization message is sent as a send confirm or a broadcast (send/no reply) message.

Real Time Clock

Multilin Agile is capable of receiving a time reference from several time sources in addition to its own internal clock for the purpose of time stamping events, transient recorders and other occurrences within the relay. The accuracy of the time stamp is based on the time reference used. Multilin Agile supports an internal clock, SNTP and IRIG-B as potential time references.

With PTP, Multilin Agile acts as a ordinary clock, with only Sync and Pdelay_Req messages.

If two or more time sources are setup, the time source with the higher priority, as shown in Table 1 is used, where 1 is considered to be the highest priority.

Table 1

Time source	Accuracy	Priority
IRIG-B		2*
SNTP		3
Internal Clock		4

Note:
Synchronization by IEC 103, DNP and Modbus is not going to be issued if there is a sync source from IRIG-B or SNTP.

18.6.1.4 IEC103 INTEROPERABILITY

The Multilin Agile IEC 60870-5-103 interface is a master/slave interface with the device as the slave device. This section describes the protocol IEC 60870-5-103 slave implementation in the IED.

Physical layer

Electrical interface

X	EIA RS-485
32	Number of loads for one protection equipment

Optical Interface

	Glass fibre
	Plastic fibre
	F-SMA type connector
	BFOC/2,5 type connector

Transmission Speed

X	9600 bits/s
X	19200 bits/s
X	38400 bits/s
X	57600 bits/s
X	115200 bits/s

Link Layer

There are no choices for the link layer.

Application Layer

Transmission mode for application data

Mode 1 (least significant octet first), as defined in 4.10 of IEC 60870-5-4, is used exclusively in this companion standard.

Common address of ASDU

X	One COMMON ADDRESS OF ASDU (identical with station address)
	More than one COMMON ADDRESS OF ASDU

Selection of standard information numbers in monitor direction

System functions in monitor direction

	INF	Semantics
X	<0>	End of general interrogation
X	<0>	Time synchronization
X	<2>	Reset FCB
X	<3>	Reset CU
X	<4>	Start/restart
X	<5>	Power on

Status indications in monitor direction

The status indications in monitor direction are not selected in the table but they can be configured under, ***SETPOINTS\DEVICE\COMMUNICATIONS\IEC103 PT LISTS\BINARY INPUTS*** settings.

	INF	Semantics
	<16>	Auto-recloser active
	<17>	Teleprotection active
	<18>	Protection active
	<19>	LED reset
	<20>	Monitor direction blocked
	<21>	Test mode
	<22>	Local parameter setting
	<23>	Characteristic 1
	<24>	Characteristic 2
	<25>	Characteristic 3
	<26>	Characteristic 4

	<27>	Auxiliary input 1
	<28>	Auxiliary input 2
	<30>	Auxiliary input 4
	<29>	Auxiliary input 3

Supervision indications in monitor direction

The supervision indications in monitor direction are not selected in the table but they can be configured under, ***SETPOINTS\DEVICE\COMMUNICATIONS\IEC103 PT LISTS\BINARY INPUTS*** settings.

	INF	Semantics
	<32>	Measurand supervision I
	<33>	Measurand supervision V
	<35>	Phase sequence supervision
	<36>	Trip circuit supervision
	<37>	I>> back-up operation
	<38>	VT fuse failure
	<39>	Teleprotection disturbed
	<46>	Group warning
	<47>	Group alarm

Earth fault indications in monitor direction

	INF	Semantics
	<48>	Earth fault L1
	<49>	Earth fault L2
	<50>	Earth fault L3
	<51>	Earth fault forward, i.e. line
	<52>	Earth fault reverse, i.e. busbar

Fault indications in monitor direction

The fault indications in monitor direction are not selected in the table but they can be configured under ***SETPOINTS \DEVICE\COMMUNICATIONS\IEC103 PT LISTS\BINARY INPUTS*** settings.

	INF	Semantics
	<64>	Start/pick-up L1

	<65>	Start/pick-up L2
	<66>	Start/pick-up L3
	<67>	Start/pick-up N
	<68>	General trip
	<69>	Trip L1
	<70>	Trip L2
	<71>	Trip L3
	<72>	Trip I>> (back-up operation)
	<73>	Fault location X in ohms
	<74>	Fault forward/line
	<75>	Fault reverse/busbar
	<76>	Teleprotection signal transmitted
	<77>	Teleprotection signal received
	<78>	Zone 1
	<79>	Zone 2
	<80>	Zone 3
	<81>	Zone 4
	<82>	Zone 5
	<83>	Zone 6
	<84>	General start/pick-up
	<85>	Breaker failure
	<86>	Trip measuring system L1
	<87>	Trip measuring system L2
	<88>	Trip measuring system L3
	<89>	Trip measuring system E
	<90>	Trip I>
	<91>	Trip I>>
	<92>	Trip IN>
	<93>	Trip IN>>

Auto-reclosure indications in monitor direction

The auto-reclosure indications in monitor direction are not selected in the table but they can be configured under ***SETPOINTS\DEVICE\COMMUNICATIONS\IEC103 PT LISTS\BINARY INPUTS*** settings.

	INF	Semantics
	<128>	CB ‘on’ by AR
	<129>	CB ‘on’ by long-time AR
	<130>	AR blocked

Measurands in monitor direction

The measurands in monitor direction are not selected in the table but they can be configured under ***SETPOINTS \DEVICE\COMMUNICATIONS\IEC103 PT LISTS\MEASURANDS*** settings.

	INF	Semantics
	<144>	Measurand I
	<145>	Measurands I, V
	<146>	Measurands I, V, P, Q
	<147>	Measurands In, Ven
	<148>	Measurands IL123, VL123, P, Q, f

Generic functions in monitor direction

	INF	Semantics
	<240>	Read headings of all defined groups
	<241>	Read values or attributes of all entries of one group
	<243>	Read directory of a single entry
	<244>	Read value or attribute of a single entry
	<245>	End of general interrogation of generic data
	<249>	Write entry with confirmation
	<250>	Write entry with execution
	<251>	Write entry aborted

Selection of standard information numbers in control direction

System functions in control direction

	INF	Semantics

X	<0>	Initiation of general interrogation
X	<0>	Time synchronization

General commands in control direction

The General commands in control direction are not selected in the table but they can be configured under ***SETPOINTS\DEVICE\COMMUNICATIONS\IEC103 PT LISTS\COMMANDS*** settings.

	INF	Semantics
	<16>	Auto-recloser on/off
	<17>	Teleprotection on/off
	<18>	Protection on/off
	<19>	LED reset
	<23>	Activate characteristic 1
	<24>	Activate characteristic 2
	<25>	Activate characteristic 3
	<26>	Activate characteristic 4

Generic functions in control direction

	INF	Semantics
	<240>	Read headings of all defined groups
	<241>	Read values or attributes of all entries of one group
	<243>	Read directory of a single entry
	<244>	Read value or attribute of a single entry
	<245>	General interrogation of generic data
	<248>	Write entry
	<249>	Write entry with confirmation
	<250>	Write entry with execution
	<251>	Write entry abort

Basic application functions

	Test mode
	Blocking of monitor direction
X	Disturbance data

	Generic services
	Private data

Miscellaneous

Measurand	Max. MVAL = times rated value		
	1.2	**or**	**2.4**
Current L1			X
Current L2			X
Current L3			X
Voltage L1-E			X
Voltage L2-E			X
Voltage L3-E			X
Active power P			X
Reactive power Q			X
Frequency f			X
Voltage L1-L2			X

18.6.1.5 IEC 60870-5-103 APPLICATION LEVEL

Application Functions

The unbalanced transmission mode of the protocol is used to avoid the possibility that more than one protection equipment attempts to transmit on the channel at the same time, over the RS485 backside port.

Data is transferred to the primary or control station (master) using the "data acquisition by polling" principle. Cyclically, the master requests class 2 data to the secondary station (slave). When slave has class 1 data (high priority) pending, the ACD control bit is set to 1 demanding the master to request for that data. Periodically, the master can send a General Interrogation in order to update the complete database.

The measurands are sent to the primary station as a response to a class 2 request. There is a setting (0-60 min) in order to configure the desired interval, where 0 means transmission as fast as possible.

The following functions are supported:

- Initialization
- General Interrogation
- Synchronization
- Commands transmission

Type Identification

The implemented Type Identification values (TYPE IDENTIFICATION UI8 [1…8] <1...255>) are listed below:

<1...31>	Definitions of this companion standard (compatible range)

<32...255>	For special use (private range)

Information in monitor direction

<1>	Time-tagged message
<3>	Measurands I
<5>	Identification
<6>	Time synchronization
<8>	General interrogation termination
<9>	Measurands II

Information in control direction

<6>	Time synchronization
<7>	General interrogation
<20>	General command

Function Type

The implemented Function Type values (FUNCTION TYPE UI8 [1...8] <0...255>) are listed below:

0...127>	Private range
<128...129>	Compatible range
<130...143>	Private range
<144...145>	Compatible range
<146...159>	Private range
<160...161>	Compatible range
<162...175>	Private range
<176...177>	Compatible range
<178...191>	Private range
<192...193>	Compatible range
<194...207>	Private range
<208...209>	Compatible range
<210...223>	Private range
<224...225>	Compatible range

<240...241>	Compatible range
<242...253>	Private range
<254...255>	Compatible range

The Multilin Agile IED is identified at the protocol level as "overcurrent protection", so the Function Type <160> is used for all the digital and analogue points proposed by the standard and mapped in this profile. For the other data supported by the device, the number can be set from the private range.

Information Number

The implemented Information Number values (INFORMATION NUMBER UI8 [1...8] <0...255>) are listed below:

Information in monitor direction

<0...15>	System functions
<16...31>	Status
<32...47>	Supervision
<48...63>	Earth fault
<64...127>	Short circuit
<128...143>	Auto-reclosure
<144...159>	Measurands
<160...239>	Not used
<240...255>	Generic functions

Information in control direction

<0...15>	System functions
<16...31>	General commands
<240...255>	Generic functions

Note:
*Changes to the IEC 60870-5-103 settings under **SETPOINT/DEVICE/COMMUNICATIONS/IEC 60870-5-103**, **IEC103 PT LISTS**, **IED103DISTRECORD** take effect only after rebooting the IED.*

18.6.2 DNP AND IEC104 POINT LISTS

The menu path for the DNP/IEC104 point lists is shown below.

Path: ***Setpoints*** > ***Device*** > ***Communications*** > ***DNP/IEC104 Point Lists***

Binary Input/MSP Points

Analog Input/MME Points

Binary Outp/CSC/CDC Pnts

Binary input points (DNP) or MSP points (IEC 60870-5-104)

You can configure the binary inputs points for the DNP protocol, or the MSP points for IEC 60870-5-104 protocol to a maximum of 96 points. The data source for each point is user-programmable and can be configured by assigning FlexLogic operands. For a complete list, see Format Code FC142.

The menu path for the binary input points (DNP) or MSP points (IEC 60870-5-104) is shown below.

Path: ***Setpoints*** > ***Device*** > ***Communications*** > ***DNP/IEC104 Point Lists*** > ***Binary Input/MSP Points***

Point 0 Entry

...

Point 255 Entry

Analog input points (DNP) or MME points (IEC 60870-5-104)

You can configure up to 255 analog input points for the DNP or IEC 60870-5-104 protocols. The menu path for the analog input point (DNP) or MME points (IEC 60870-5-104) is shown below.

Path: ***Setpoints*** > ***Device*** > ***Communications*** > ***DNP/IEC104 Point Lists*** > ***Analog Input / MME Points***

Analog IP Point 0 Entry

Point 0 Scale Factor

Point 0 Deadband

DNP ANALOG INPUT POINT 0(255) SCALE FACTOR

Range: / 0.001, / 0.01, / 0.1, / 1, / 10, / 100, / 1000, / 10000, / 100000

Default: /1

These are numbers used to scale analog input point values. Each setting represents the scale factor for the analog input point. For example, if the ***DNP PHASE A VOLTAGE SCALE FACTOR*** setting is set to `/ 1000`, and the Phase A voltage is 72000 V, the Phase A voltage sent on to the relay is 72 V. The settings are useful when analog input values must be adjusted to fit within certain ranges in DNP masters.

> *Note:*
> *A scale factor of `/ 0.1` is equivalent to a multiplier of 10.*

DNP ANALOG INPUT POINT 0(255) DEADBAND

Range: 1 to 100000000 in steps of 1

Default: 30000

The setting is the threshold value to define the condition to trigger unsolicited responses containing analog input data. Each setting represents the default deadband value for the associated analog input. For example, to trigger unsolicited responses from the relay when phase A current changes by 15 A, the DNP Current Deadband for Phase A current should be set to `15`. Note that these settings are the deadband default values. DNP object 34 points can be used to change deadband values from the default for each individual DNP analog input point. Whenever power is removed and re-applied, the new deadbands are in effect.

Binary output points (DNP) or CSC/CDC points (IEC 60870-5-104)

You can configure the binary output points for the DNP protocol, or the CSC/CDC points for IEC 60870-5-104 protocol to a maximum of 16 points. The data source for each point is user-programmable and can be configured by assigning FlexLogic operands. The menu path for the binary output points (DNP) or CSC/CDC points (IEC 60870-5-104) is shown below.

Path: ***Setpoints*** > ***Device*** > ***Communications*** > ***DNP/IEC104 Point Lists*** > ***Binary Output / CSC/CDC Points***

Binary Output Point 0 ON

Binary Output Point 0 OFF

...

Binary Output Point 31 ON

Binary Output Point 31 OFF

> *Note:*
> *The DNP/IEC 60870-5-104 point lists always begin with point 0 and end at the first `Off` value. Since DNP / IEC 60870-5-104 point lists must be in one continuous block, any points assigned after the first `Off` point are ignored.*

BINARY INPUT POINTS

The DNP binary input data points are configured through the **DNP/IEC104 POINT LISTS BINARY INPUT/MSP POINTS** menu. When a freeze function is performed on a binary counter point, the frozen value is available in the corresponding frozen counter point.

- Static (Steady-State) Object Number: **1**
- Change Event Object Number: **2**
- Request Function Codes supported: **1 (read), 22 (assign class)**
- Static Variation reported when variation 0 requested: **2 (Binary Input with status), Configurable**
- Change Event Variation reported when variation 0 requested: **2 (Binary Input Change with Time), Configurable**
- Change Event Scan Rate: **8 times per power system cycle**
- Change Event Buffer Size: **1024**
- Default Class for All Points: **1**

POINT NAME/DESCRIPTION COUNTERS

The following details lists both Binary Counters (Object 20) and Frozen Counters (Object 21). When a freeze function is performed on a Binary Counter point, the frozen value is available in the corresponding Frozen Counter point. Digital Counter values are represented as 16 or 32-bit integers. The DNP 3.0 protocol defines counters to be unsigned integers. Care should be taken when interpreting negative counter values.

BINARY COUNTERS

- Static (Steady-State) Object Number: **20**
- Change Event Object Number: **22**
- Request Function Codes supported: **1 (read), 7 (freeze), 8 (freeze noack), 9 (freeze and clear), 10 (freeze and clear, noack), 22 (assign class)**
- Static Variation reported when variation 0 requested: **1 (32-Bit Binary Counter with Flag)**
- Change Event Variation reported when variation 0 requested: **1 (32-Bit Counter Change Event without time)**
- Change Event Buffer Size: **10**
- Default Class for all points: **3**

FROZEN COUNTERS

- Static (Steady-State) Object Number: **21**
- Change Event Object Number: **23**
- Request Function Codes supported: **1 (read)**
- Static Variation reported when variation 0 requested: **1 (32-Bit Frozen Counter with Flag)**

- Change Event Variation reported when variation 0 requested: **1 (32-Bit Counter Change Event without time)**
- Change Event Buffer Size: **10**
- Default Class for all points: **3**

BINARY AND FROZEN COUNTERS POINT INDEX NAME/DESCRIPTION

- 0 Digital Counter 1
- 1 Digital Counter 2
- 2 Digital Counter 3
- 3 Digital Counter 4
- 4 Digital Counter 5
- 5 Digital Counter 6
- 6 Digital Counter 7
- 7 Digital Counter 8
- 8 Digital Counter 9
- 9 Digital Counter 10
- 10 Digital Counter 11
- 11 Digital Counter 12
- 12 Digital Counter 13
- 13 Digital Counter 14
- 14 Digital Counter 15
- 15 Digital Counter 16

ANALOG INPUTS

It is important to note that 16-bit and 32-bit variations of analog inputs are transmitted through DNP as signed numbers. Even for analog input points that are not valid as negative values, the maximum positive representation is 32767 for 16-bit values and 2147483647 for 32-bit values. This is a DNP requirement. The deadbands for all Analog Input points are in the same units as the Analog Input quantity. For example, an Analog Input quantity measured in volts has a corresponding deadband in units of volts. Relay settings are available to set default deadband values according to data type. Deadbands for individual Analog Input Points can be set using DNP Object 34.

A default variation refers to the variation response when variation 0 is requested and/or in class 0, 1, 2, or 3 scans. The default variations for object types 1, 2, 20, 21, 22, 23, 30, and 32 are selected via relay settings. This optimizes the class 0 poll data size.

For static (non-change-event) objects, qualifiers 17 or 28 are only responded when a request is sent with qualifiers 17 or 28, respectively. Otherwise, static object requests sent with qualifiers 00, 01, 06, 07, or 08, are responded with qualifiers 00 or 01. For change event objects, qualifiers 17 or 28 are always responded.

Cold restarts are implemented the same as warm restarts – the relay is not restarted, but the DNP process is restarted.

18.6.3 IEC60870-5-104

The IEC 60870-5-104 communications protocol is supported on Ethernet ports 4 and 5 only. Setting changes become active after rebooting.

> *Note:*
> *Both DNP and IEC104 protocol can work at the same time, but consider that there is only one point map. So, the two protocols use the same data mapping, i.e., same point index and same point source.*
> *The relay supports up to two IEC104 client connections simultaneously.*

Path: ***Setpoints*** > ***Device*** > ***Communications*** > ***IEC 60870-5-104***

Channel 1 Port

Channel 2 Port

Common Address of ASDU

Client Address 1

Client Address 2

TCP Port Number 1

TCP Port Number 2

Cyclic Data Period

Object Info Addrs Bnry

Object Info Addrs Analog

Object Info Addrs Countrs

Object Info Addrs Cmnd

Object Info Analog Param

By default the Object Information Address for the different data is as follows:

M_SP (Single Points) = 1000

M_ME (Measured value) = 2000

M_IT (Integrated Totals) = 3000

C_SC or C_DC (Single or Double Command) = 4000

P_ME_NB (Parameter of measured value) = 5000

Each Measured value has a Parameter of measured value (P_ME_NB) associated to its threshold.

The IEC 60870-5-104 Deadbands settings are used to determine when to trigger spontaneous responses containing M_ME_NB_1 analog data. Each setting represents the threshold value for each M_ME_NB_1 analog point.

For example, to trigger spontaneous responses when a current value changes by 15 A, the ***Analog Point xx Deadband*** setting should be set to `15`. Note that these settings are the default values of the deadbands. P_ME_NB_1 (parameter of measured value, scaled value) points can be used to change threshold values, from the default, for each individual M_ME_NB_1 analog point. There are three ways to send the measurands to the Master station. The measurands are part of the General Group and Group 2, so when a general interrogation or group 2 interrogation takes place all the measurands are included in the response. Also, there is a cyclic data period setting where it is configured in the scan period to send the measurands to the Master. And the last way, is by sending spontaneously when a deadband overflow takes place. The IEC104 Channels sub-menu information is shown below.

Commands are executed over the Binary Outputs. The first 8 Binary Outputs are configured to receive Select/Operate Commands and the next 8 Binary Outputs are configured to receive Direct Execute Commands.

The ***IEC104 CHANNEL 1 PORT*** and ***IEC104 CHANNEL 2 PORT*** settings select the communications port assigned to the IEC104 protocol for each channel. When this setting is set to `Network - TCP`, the IEC104 protocol can be used over TCP/IP on channels 1 or 2. The ***IEC104 NETWORK CLIENT ADDRESS*** settings can force the relay to respond to a maximum of two specific IEC104 masters which own the configured IP Addresses. The settings in this sub-menu are shown below.

Note:
***IEC104 CHANNEL 1 PORT** takes the **Port Number 1** and **Client Address 1** to allow or reject connections. The same method is used by channel 2.*

GROUPS OF DATA

The data is organized into groups in order to provide values when the controlling station requests them by a general or group interrogation.

Group 1 is set by the 96 Single Points (M_SP).

Group 2 is set by the 32 Measured values (M_ME).

Group 3 is set by the 32 Measured thresholds (P_ME).

These 96 Single Points and 32 Measured Values are also sent as a response to a General Interrogation.

The Integrated Totals (M_IT) has its own Counter Group 1, and it is sent as a response to a General Request Counter.

18.6.4 DNP 3.0

This section describes how the DNP 3.0 protocol is applied in the product. It is not a description of the protocol itself. The level at which this section is written assumes that the reader is already familiar with the DNP 3.0 protocol.

For more detail information for the DNP 3.0 protocol, please refer to the documentation available from the user group. The device profile document specifies the full details of the DNP 3.0 implementation. This is the standard format DNP 3.0 document that specifies which objects; variations and qualifiers are supported. The device profile document also specifies what data is available from the device using DNP 3.0. The IED operates as a DNP 3.0 slave.

The DNP 3.0 protocol is defined and administered by the DNP Users Group. For further information on DNP 3.0 and the protocol specifications, please see the DNP website (www.dnp.org).

18.6.4.1 PHYSICAL CONNECTION AND LINK LAYER

DNP 3.0 can be used with two physical layer protocols: EIA(RS)485, or Ethernet.

Several connection options are available for DNP 3.0

- DNP3 Serial: Rear serial port 1 - for permanent SCADA connection via RS485
- DNP3oE: The rear Ethernet RJ45 port - for permanent SCADA Ethernet connection

With DNP3 Over Ethernet, a maximum of 2 Clients can be configured.

The IED address and baud rate can be selected using the front panel menu or by a suitable application.

When using a serial interface, the data format is: 1 start bit, 8 data bits, 1 stop bit and optional configurable parity bit.

Binary input data

Binary input data is used to monitor two-state device operations such as the position of a breaker. The user can configure up to 255 Binary inputs. All binary inputs are configured from Flexlogic Equation Editor signals.

Binary output data

Binary output data is used to control two-state devices such as the opening and closing of a breaker. The IED can be configured to support up to 32 Binary outputs. The client's Binary outputs are mapped to a list of Virtual Inputs and Coils. Please note that the number of Binary/ Control outputs is configurable. Of the total number of outputs configured the user can configure a subset that supports dual point control.

There is just one option for IEC 60870-5-103:analogue input data

Analogue input data is used to monitor analogue signals such as voltages, currents, and power. The device has 32 analogue points.

Analogue output data

Not supported in the device.

Time stamps

Count input data

Count input data could represent a cumulative quantity such as kilowatt hours of energy. The Multilin Agile has 16 Count input data.

Supported Object Numbers		
Object	**DNP Data Type**	**Multilin Agile**
1	Binary Input status	User assigned FlexLogic Operands
2	Binary Input change since last read	
10	Binary output status for monitoring	User assigned Virtual Inputs and/or Commands (client looks at status only)
12	Control Relay Output Block	User assigned Virtual Inputs and/or Commands (client can write to the user specified number of control relay outputs)
20	Counter value	Digital counters 1 through 16,
21	Frozen counter value	
22	Counter value change since last read	
23	Frozen counter value change since last read by client	
30	User configured Analogue input value	
32	User configured Analogue input value changed since last time read by client.	

18.6.4.2 OBJECT 1 BINARY INPUTS

The DNP binary input data points are configured under the path: ***SETPOINTS\ DEVICE\COMMUNICATIONS\DNP POINT LISTS\ BINARY INPUTS*** When a freeze function is performed on a binary counter point, the frozen value is available in the corresponding frozen counter point.

Binary Input Points

Static (Steady-State) Object Number: 1

Change Event Object Number: 2

Request Function Codes supported: 1 (read), 22 (assign class)

Static Variation reported when variation 0 requested: 2 (Binary Input with status), Configurable

Change Event Variation reported when variation 0 requested: 2 (Binary Input Change with Time), Configurable

Change Event Scan Rate: 8 times per power system cycle

Change Event Buffer Size: 1024

Default Class for All Points: 1

18.6.4.3 OBJECT 10 BINARY OUTPUTS

Object 10, binary outputs, contains commands that can be operated using DNP 3.0. Therefore the points accept commands of type pulse on (null, trip, close) and latch on/off as detailed in the device profile in the relevant Menu Database document, and execute the command once for either command. The other fields are ignored (queue, clear, trip/close, in time and off time).

Object Number: 10

Request Function Codes supported: 1 (read)

Default Variation reported when Variation 0 requested: 2 (Binary Output Status)

18.6.4.4 OBJECT 20 BINARY COUNTERS

The following details lists both Binary Counters (Object 20) and Frozen Counters (Object 21). When a freeze function is performed on a Binary Counter point, the frozen value is available in the corresponding Frozen Counter point. IED Digital Counter values are represented as 16 or 32-bit integers. The DNP 3.0 protocol defines counters to be unsigned integers. Care should be taken when interpreting negative counter values.

Binary Counters

Static (Steady-State) Object Number: 20

Change Event Object Number: 22

Request Function Codes supported: 1 (read), 7 (freeze), 8 (freeze noack), 9 (freeze and clear), 10 (freeze and clear, noack), 22 (assign class)

Static Variation reported when variation 0 requested: 1 (32-Bit Binary Counter with Flag)

Change Event Variation reported when variation 0 requested: 1 (32-Bit Counter

Change Event without time)

Change Event Buffer Size: 10

Default Class for all points: 3

Frozen Counters

Static (Steady-State) Object Number: 21

Change Event Object Number: 23

Request Function Codes supported: 1 (read)

Static Variation reported when variation 0 requested: 1 (32-Bit Frozen Counter with Flag)

Change Event Variation reported when variation 0 requested: 1 (32-Bit Counter Change Event without time)

Change Event Buffer Size: 10

Default Class for all points: 3

Binary and Frozen Counters Point Index Name/Description

0 Digital Counter 1

1 Digital Counter 2

2 Digital Counter 3

3 Digital Counter 4

4 Digital Counter 5

5 Digital Counter 6

6 Digital Counter 7

7 Digital Counter 8

8 Digital Counter 9

9 Digital Counter 10

10 Digital Counter 11

11 Digital Counter 12

12 Digital Counter 13

13 Digital Counter 14

14 Digital Counter 15

15 Digital Counter 16

18.6.4.5 OBJECT 30 ANALOGUEUE INPUT

It is important to note that 16-bit and 32-bit variations of analogue inputs are transmitted through DNP as signed numbers. Even for analogue input points that are not valid as negative values, the maximum positive representation is 32767 for 16-bit values and 2147483647 for 32-bit values. This is a DNP requirement. The deadbands for all Analogue Input points are in the same units as the Analogue Input quantity. For example, an Analogue Input quantity measured in volts has a corresponding deadband in units of volts. IED settings are available to set default deadband values according to data type. Deadbands for individual Analogue Input Points can be set using DNP Object 34.

Note:
1. A default variation refers to the variation response when variation 0 is requested and/or in class 0, 1, 2, or 3 scans. The default variations for object types 1, 2, 20, 21, 22, 23, 30, and 32 are selected via relay settings. This optimizes the class 0 poll data size.
2. For static (non-change-event) objects, qualifiers 17 or 28 are only responded when a request is sent with qualifiers 17 or 28, respectively. Otherwise, static object requests sent with qualifiers 00, 01, 06, 07, or 08, are responded with qualifiers 00 or 01. For change event objects, qualifiers 17 or 28 are always responded.
3. Cold restarts are implemented the same as warm restarts - the Multilin Agile is not restarted, but the DNP process is restarted.
4. Only value changes of Binary or Analogue Points are considered as events. Flag changes i.e. say a point becomes offline to online with same value or Time stamp changes i.e. the time stamp of say frozen counter events changes without value change are not considered as events and not reported to master as events.

18.6.4.6 DNP 3.0 DEVICE PROFILE

This section describes the specific implementation of DNP version 3.0 within GE Vernova Multilin Agile IEDs.

18.6.4.6.1 DNP 3.0 DEVICE PROFILE TABLE

The following table provides the device profile in a similar format to that defined in the DNP 3.0 Subset Definitions Document. While it is referred to in the DNP 3.0 Subset Definitions as a “Document”, it is just one component of a total interoperability guide. This table, in combination with the subsequent Implementation and Points List tables should provide a complete interoperability/configuration guide for the device.

The following table provides the device profile in a similar format to that defined in the DNP 3.0 Subset Definitions Document. While it is referred to in the DNP 3.0 Subset Definitions as a "Document", it is just one component of a total interoperability guide. This table, in combination with the subsequent Implementation and Points List tables should provide a complete interoperability/configuration guide for the device.

(Also see the IMPLEMENTATION TABLE in the following section)
Vendor Name: GE Vernova

Device Name: Multilin Agile			
Highest DNP Level Supported:			
For Requests: For Responses:	Level 2 Level 2		
Device Function:			
☐ Master ☑ Slave			
Notable objects, functions, and/or qualifiers supported in addition to the Highest DNP Levels Supported (the complete list is described in the attached table):			
Binary Inputs Binary Input Changes Binary Outputs Control Relay Output Block Binary Counters Frozen Counters Counter Change Event Frozen Counter Event Analogue Inputs Analogue Input Changes Analogue Deadbands Time and Date Time Delay Fine Class Data Internal Indications	(Object 1) (Object 2) (Object 10) (Object 12) (Object 20) (Object 21) (Object 22) (Object 23) (Object 30) (Object 32) (Object 34) (Object 50) (Object 52) (Object 60) (Object 80)		
Maximum Data Link Frame Size (octets):		Maximum Application Fragment Size (octets):	
Transmitted: Received:	292 292	Transmitted: Received:	Configurable up to 2048 2048
Maximum Data Link Re-tries:		Maximum Application Layer Re-tries:	
x	None Fixed at 3 Configurable	x	None Configurable
Requires Data Link Layer Confirmation:			
x	Never Always Sometimes Configurable		
Requires Application Layer Confirmation:			
x x	Never Always When reporting event data When sending multi-fragment responses Sometimes Configurable		

Timeouts While Waiting for: Configurable	
Data link confirm:	None Fixed at ____ Variable Configurable
Complete appl. fragment:	None Fixed at ____ Variable Configurable
Application confirm:	None Fixed at 10 s Variable Configurable
Complete appl. response:	None Fixed at ____ Variable Configurable

Others: Transmission delay: Need time interval: Select/operate arm timeout: Binary input change scanning period: Analogue input change scanning period: Counter change scanning period: Frozen counter event scanning period:	 No intentional delay Configurable (default = 24 hrs.) 10 s 8 times per power system cycle 500 ms 500 ms 500 ms
Sends/Executes Control Operations:	
WRITE Binary Outputs	Never Always Sometimes Configurable
SELECT/OPERATE	Never Always Sometimes Configurable
DIRECT OPERATE	Never Always Sometimes Configurable
DIRECT OPERATE – NO ACK	Never Always Sometimes Configurable
Count > 1	Never Always Sometimes Configurable
Pulse On	Never Always Sometimes Configurable
Pulse Off	Never Always Sometimes Configurable
Latch On	Never Always Sometimes Configurable
Latch Off	Never Always Sometimes Configurable
Queue	Never Always Sometimes Configurable
Clear Queue	Never Always Sometimes Configurable
Explanation of ‘Sometimes’: Object 12 points are mapped to Virtual Inputs and Commands(Force Coils). Both "Pulse On" and "Latch On" operations perform the same function in the series8; that is, the appropriate Virtual Input or Coil is put into the "On" state. The On/Off times and Count value are ignored. "Pulse Off" and "Latch Off" operations put the appropriate Virtual Input or Coil into the "Off" state. "Trip" and "Close" operations both put the appropriate Virtual Input or coil into the "On" state if a paired mapping is set, otherwise "Trip" will put into "Off" and "Close" will put into "On".	

Reports Binary Input Change Events when no specific variation requested: Never x Only time-tagged ¨ Only non-time-tagged ¨ Configurable	Reports time-tagged Binary Input Change Events when no specific variation requested: ¨ Never x Binary Input Change With Time Binary Input Change With Relative Time Configurable (attach explanation)
Sends Unsolicited Responses: Never Configurable Only certain objects x Sometimes x ENABLE/DISABLE unsolicited Function codes supported	Sends Static Data in Unsolicited Responses: x Never When Device Restarts When Status Flags Change No other options are permitted.
Explanation of ‘Sometimes’: It will be disabled for RS-485 applications, since there is no collision avoidance mechanism. For Ethernet communication it will be available and it can be disabled or enabled with xhe proper function code.	
Default Counter Object/Variation: No Counters Reported Configurable (attach explanation) x Default Object: 20	Counters Roll Over at: No Counters Reported Configurable (attach explanation) x 16 Bits

Default Variation: 1 x Point-by-point list attached	32 Bits Other Value: _____ x Point-by-point list attached
Sends Multi-Fragment Responses: x Yes No	

18.6.4.6.2 DNP 3.0 IMPLEMENTATION TABLE

The implementation table provides a list of objects, variations and control codes supported by the device:

Object No.	Variation No.	Description	Function Codes (DEC)	Qualifier Codes (HEX)	Function Codes (DEC)	Qualifier Codes (HEX)
1	0	Binary Input (Variation 0 is used to request default variation)	1 (read) 22 (assign class)	00, 01 (start-stop) 06 (no range, or all) 07, 08 (limited quantity) 17, 28 (index)		
	1	Binary Input	1 (read) 22 (assign class)	00, 01 (start-stop) 06 (no range, or all) 07, 08 (limited quantity) 17, 28 (index)	129 (response)	00, 01 (start-stop) 17, 28 (index) (see Note 2)
	2	Binary Input with Status	1 (read) 22 (assign class)	00, 01 (start-stop) 06 (no range, or all) 07, 08 (limited quantity) 17, 28 (index)	129 (response)	00, 01 (start-stop) 17, 28 (index) (see Note 2)
2	0	Binary Input Change (Variation 0 is used to request default variation)	1 (read)	06 (no range, or all) 07, 08 (limited quantity)		
	1	Binary Input Change without Time	1 (read)	06 (no range, or all) 07, 08 (limited quantity)	129 (response) 130 (unsol. resp.)	17, 28 (index)
	2	Binary Input Change with Time	1 (read)	06 (no range, or all) 07, 08 (limited quantity)	129 (response 130 (unsol. resp.)	17, 28 (index)
	3	Binary Input Change with Relative Time	1 (read)	06 (no range, or all) 07, 08 (limited quantity)		
10	0	Binary Output Status (Variation 0 is used to request default variation)	1 (read)	00, 01(start-stop) 06 (no range, or all) 07, 08 (limited quantity) 17, 28 (index)		
	2	Binary Output Status	1 (read)	00, 01 (start-stop) 06 (no range, or all) 07, 08 (limited quantity) 17, 28 (index)	129 (response)	00, 01 (start-stop) 17, 28 (index) (see Note 2)
12	1	Control Relay Output Block	3 (select) 4 (operate) 5 (direct op) 6 (dir. op, noack)	00, 01 (start-stop) 07, 08 (limited quantity) 17, 28 (index)	129 (response)	echo of request

Object No.	Variation No.	Description	Function Codes (DEC)	Qualifier Codes (HEX)	Function Codes (DEC)	Qualifier Codes (HEX)
20	0	Binary Counter (Variation 0 is used to request default variation)	1 (read) 7 (freeze) 8 (freeze noack) 9 (freeze clear) 10 (frz. cl. noack) 22 (assign class)	00, 01 (start-stop) 06 (no range, or all) 07, 08 (limited quantity) 17, 28(index)		
	1	32-Bit Binary Counter	1 (read) 7 (freeze) 8 (freeze noack) 9 (freeze clear) 10 (frz. cl. noack) 22 (assign class)	00, 01 (start-stop) 06 (no range, or all) 07, 08 (limited quantity) 17, 28 (index)	129 (response)	00, 01 (start-stop) 17, 28 (index) (see Note 2)
	2	16-Bit Binary Counter	1 (read) 7 (freeze) 8 (freeze noack) 9 (freeze clear) 10 (frz. cl. noack) 22 (assign class)	00, 01 (start-stop) 06 (no range, or all) 07, 08 (limited quantity) 17, 28 (index)	129 (response)	00, 01 (start-stop) 17, 28 (index) (see Note 2)
	5	32-Bit Binary Counter without Flag	1 (read) 7 (freeze) 8 (freeze noack) 9 (freeze clear) 10 (frz. cl. noack) 22 (assign class)	00, 01 (start-stop) 06 (no range, or all) 07, 08 (limited quantity) 17, 28 (index)	129 (response)	00, 01 (start-stop) 17, 28 (index) (see Note 2)
	6	16-Bit Binary Counter without Flag	1 (read) 7 (freeze) 8 (freeze noack) 9 (freeze clear) 10 (frz. cl. noack) 22 (assign class)	00, 01 (start-stop) 06 (no range, or all) 07, 08 (limited quantity) 17, 28 (index)	129 (response)	00, 01 (start-stop) 17, 28 (index) (see Note 2)
21	0	Frozen Counter (Variation 0 is used to request default variation)	1 (read) 22 (assign class)	00, 01 (start-stop) 06 (no range, or all) 07, 08 (limited quantity) 17, 28 (index)		
	1	32-Bit Frozen Counter	1 (read) 22 (assign class)	00, 01 (start-stop) 06 (no range, or all) 07, 08 (limited quantity) 17, 28 (index)	129 (response)	00, 01 (start-stop) 17, 28 (index) (see Note 2)
	2	16-Bit Frozen Counter	1 (read) 22 (assign class)	00, 01 (start-stop) 06 (no range, or all) 07, 08 (limited quantity) 17, 28 (index)	129 (response)	00, 01 (start-stop) 17, 28 (index) (see Note 2)
	9	32-Bit Frozen Counter without Flag	1 (read) 22 (assign class)	00, 01 (start-stop) 06 (no range, or all) 07, 08 (limited quantity) 17, 28 (index)	129 (response)	00, 01 (start-stop) 17, 28 (index) (see Note 2)
	10	16-Bit Frozen Counter without Flag	1 (read) 22 (assign class)	00, 01 (start-stop) 06 (no range, or all) 07, 08 (limited quantity) 17, 28 (index)	129 (response)	00, 01 (start-stop) 17, 28 (index) (see Note 2)

Object No.	Variation No.	Description	Function Codes (DEC)	Qualifier Codes (HEX)	Function Codes (DEC)	Qualifier Codes (HEX)
22	0	Counter Change Event (Variation 0 is used to request default variation)	1 (read)	06 (no range, or all) 07, 08 (limited quantity)		
	1	32-Bit Counter Change Event	1 (read)	06 (no range, or all) 07, 08 (limited quantity)	129 (response) 130 (unsol. resp.)	17, 28 (index)
	2	16-Bit Counter Change Event	1 (read)	06 (no range, or all) 07, 08 (limited quantity)	129 (response) 130 (unsol. resp.)	17, 28 (index)
	5	32-Bit Counter Change Event with Time	1 (read)	06 (no range, or all) 07, 08 (limited quantity)	129 (response) 130 (unsol. resp.)	17, 28 (index)
	6	16-Bit Counter Change Event with Time	1 (read)	06 (no range, or all) 07, 08 (limited quantity)	129 (response) 130 (unsol. resp.)	17, 28 (index)
23	0	Frozen Counter Event (Variation 0 is used to request default variation)	1 (read)	06 (no range, or all) 07, 08 (limited quantity)		
	1	32-Bit Frozen Counter Event	1 (read)	06 (no range, or all) 07, 08 (limited quantity)	129 (response) 130 (unsol. resp.)	17, 28 (index)
	2	16-Bit Frozen Counter Event	1 (read)	06 (no range, or all) 07, 08 (limited quantity)	129 (response) 130 (unsol. resp.)	17, 28 (index)
	5	32-Bit Frozen Counter Event with Time	1 (read)	06 (no range, or all) 07, 08 (limited quantity)	129 (response) 130 (unsol. resp.)	17, 28 (index)
	6	16-Bit Frozen Counter Event with Time	1 (read)	06 (no range, or all) 07, 08 (limited quantity)	129 (response) 130 (unsol. resp.)	17, 28 (index)
30	0	Analogue Input (Variation 0 is used to request default variation)	1 (read) 22 (assign class)	00, 01 (start-stop) 06 (no range, or all) 07, 08 (limited quantity) 17, 28 (index)		
	1	32-Bit Analogue Input	1 (read) 22 (assign class)	00, 01 (start-stop) 06 (no range, or all) 07, 08 (limited quantity) 17, 28 (index)	129 (response)	00, 01 (start-stop) 17, 28 (index) (see Note 2)
	2	16-Bit Analogue Input	1 (read) 22 (assign class)	00, 01 (start-stop) 06 (no range, or all) 07, 08 (limited quantity) 17, 28 (index)	129 (response)	00, 01 (start-stop) 17, 28 (index) (see Note 2)
	3	32-Bit Analogue Input without Flag	1 (read) 22 (assign class)	00, 01 (start-stop) 06 (no range, or all) 07, 08 (limited quantity) 17, 28 (index)	129 (response)	00, 01 (start-stop) 17, 28 (index) (see Note 2)
	4	16-Bit Analogue Input without Flag	1 (read) 22 (assign class)	00, 01 (start-stop) 06 (no range, or all) 07, 08 (limited quantity) 17, 28 (index)	129 (response)	00, 01 (start-stop) 17, 28 (index) (see Note 2)
	5	Short floating point	1 (read) 22 (assign class)	00, 01 (start-stop) 06 (no range, or all) 07, 08 (limited quantity) 17, 28 (index)	129 (response)	00, 01 (start-stop) 17, 28 (index) (see Note 2)

Object No.	Variation No.	Description	Function Codes (DEC)	Qualifier Codes (HEX)	Function Codes (DEC)	Qualifier Codes (HEX)
32	0	Analogue Change Event (Variation 0 is used to request default variation)	1 (read)	06 (no range, or all) 07, 08 (limited quantity)		
	1	32-Bit Analogue Change Event without Time	1 (read)	06 (no range, or all) 07, 08 (limited quantity)	129 (response) 130 (unsol. resp.)	17, 28 (index)
	2	16-Bit Analogue Change Event without Time	1 (read)	06 (no range, or all) 07, 08 (limited quantity)	129 (response) 130 (unsol. resp.)	17, 28 (index)
	3	32-Bit Analogue Change Event with Time	1 (read)	06 (no range, or all) 07, 08 (limited quantity)	129 (response) 130 (unsol. resp.)	17, 28 (index)
	4	16-Bit Analogue Change Event with Time	1 (read)	06 (no range, or all) 07, 08 (limited quantity)	129 (response) 130 (unsol. resp.)	17, 28 (index)
	5	Short floating point Analogue Change Event without Time	1 (read)	06 (no range, or all) 07, 08 (limited quantity)	129 (response) 130 (unsol. resp.)	17, 28 (index)
	7	Short floating point Analogue Change Event with Time	1 (read)	06 (no range, or all) 07, 08 (limited quantity)	129 (response) 130 (unsol. resp.)	17, 28 (index)
34	0	Analogue Input Reporting Deadband (Variation 0 is used to request default variation)	1 (read)	00, 01 (start-stop) 06 (no range, or all) 07, 08 (limited quantity) 17, 28 (index)		
	1	16-bit Analogue Input Reporting Deadband (default - see Note 1)	1 (read)	00, 01 (start-stop) 06 (no range, or all) 07, 08 (limited quantity) 17, 28 (index)	129 (response)	00, 01 (start-stop) 17, 28 (index) (see Note 2)
			2 (write)	00, 01 (start-stop) 07, 08 (limited quantity) 17, 28 (index)		
	2	32-bit Analogue Input Reporting Deadband	1 (read)	00, 01 (start-stop) 06 (no range, or all) 07, 08 (limited quantity) 17, 28 (index)	129 (response)	00, 01 (start-stop) 17, 28 (index) (see Note 2)
			2 (write)	00, 01 (start-stop) 07, 08 (limited quantity) 17, 28 (index)		
50	1	Time and Date (default - see Note 1)	1 (read) 2 (write)	00, 01 (start-stop) 06 (no range, or all) 07 (limited qty=1) 08 (limited quantity) 17, 28 (index)	129 (response)	00, 01 (start-stop) 17, 28 (index) (see Note 2)
52	2	Time Delay Fine (quantity = 1)	129 (response)	07 (limited quantity)		
60	0	Class 0, 1, 2, and 3 Data - used for changing the class of objects and enabling/disabling unsolicited responses.	1 (read) 20 (enable unsol) 21 (disable unsol) 22 (assign class)	06 (no range, or all)		
	1	Class 0 Data	1 (read) 22 (assign class)	06 (no range, or all)		
	2	Class 1 Data	1 (read) 20 (enable unsol) 21 (disable unsol) 22 (assign class)	06 (no range, or all) 07, 08 (limited quantity)		
	3	Class 2 Data				
	4	Class 3 Data				

Object No.	Variation No.	Description	Function Codes (DEC)	Qualifier Codes (HEX)	Function Codes (DEC)	Qualifier Codes (HEX)
80	1	Internal indications clearing	1 (read)	00, 01 (start-stop) (index =7)	129 (response)	00, 01 (start-stop)
			2 (write) (see Note 3)	00 (start-stop) (index =7)		
		No Object (function code only) see Note 3	13 (cold restart)			
		No Object (function code only)	14 (warm restart)			
		No Object (function code only)	23 (delay meas.)			

Note:
1: A default variation refers to the variation responded when variation 0 is requested and/or in class 0, 1, 2, or 3 scans. The default variations for object types 1, 2, 20, 21, 22, 23, 30, and 32 are selected via rIED settings. This optimizes the class 0 poll data size.
2: For static (non-change-event) objects, qualifiers 17 or 28 are only responded when a request is sent with qualifiers 17 or 28, respectively. Otherwise, static object requests sent with qualifiers 00, 01, 06, 07, or 08, will be responded with qualifiers 00 or 01 (for change event objects, qualifiers 17 or 28 are always responded.)
3: Cold restarts are implemented the same as warm restarts, the Multilin Agile IED is not restarted, but the DNP process is restarted.

18.6.5 MODBUS

This section describes how the Modbus protocol is applied to the Multilin Agile IEDs. It is not a description of the standard itself. The level at which this section is written assumes that the reader is already familiar with the Modbus protocol.

The Modbus protocol is a master/slave protocol, defined and administered by the Modbus Organization For further information on Modbus and the protocol specifications, please see the Modbus web site (www.modbus.org).

The Multilin Agile IED implements a subset of the Modicon Modbus RTU serial communication standard. The Modbus protocol is hardware independent. That is, the physical layer can be any of a variety of standard hardware configurations. This includes USB, RS485, RJ45 etc. Modbus is a single master/multiple slave type of protocol suitable for a multi-drop configuration.

All Ethernet ports and serial communication ports support the Modbus protocol. The only exception is if the serial port has been configured for DNP or IEC 60870-5-103 operation (as the serial port allows just one serial protocol (selectable by setting) at a time). This allows the EnerVista Configuration software (which is a Modbus master application) to communicate to the IED.

The Multilin Agile IED is always a Modbus slave with a valid slave address range 1 to 254.

18.6.5.1 PHYSICAL CONNECTION AND LINK LAYER

Data Frame Format

One data frame of an asynchronous transmission to or from a Multilin Agile IED typically consists of 1 start bit, 8 data bits, and 1 stop bit. This produces a 10-bit data frame. This is important for transmission through modems at high bit rates.

Data Rate

The Modbus protocol can be implemented at any standard communication speed. The Multilin Agile supports operation at 9600, 19200, 38400, 57600, and 115200 baud. The USB and Ethernet interfaces support Modbus TCP.

18.6.5.2 RESPONSE CODES

MCode	MODBUS Description	MiCOM Interpretation
01	Illegal Function	The function code transmitted is not supported by the slave.
02	Illegal Data Address	The data address in the request is not an allowable value.
03	Illegal Data Value	A value referenced in the data field transmitted by the master is not within range.

18.6.5.3 SUPPORTED FUNCTION CODES

The following functions are supported by the Multilin Agile IED:

- FUNCTION CODE 03H - Read Setpoints
- FUNCTION CODE 04H - Read Actual Values
- FUNCTION CODE 05H - Execute Operation
- FUNCTION CODE 06H - Store Single Setpoint
- FUNCTION CODE 07H - Read Device Status
- FUNCTION CODE 08H - Loopback Test
- FUNCTION CODE 10H - Store Multiple Setpoints

When a Modbus master communicates to the IED over Ethernet, the IED slave address, TCP port number and the IED IP address for the associated port must be configured and are also configured within the Master for this device. The default Modbus TCP port number is 502.

Configurable Modbus parameters are found at the following Path: ***SETPOINT***/***DEVICE***/***COMMUNICATIONS***/ ***MODBUS***/

For Modbus Memory Map addresses for the IED, please refer to the Setting and Signals appendix.

> *Note:*
> *Changes to the Modbus TCP Port Number setting under* ***SETPOINT/DEVICE/COMMUNICATIONS/MODBUS/TCP PORT NUMBER*** *takes effect only after rebooting the IED.*

18.6.5.4 ADMINISTRATOR LOGIN AND COMMANDS VIA MODBUS

Logging in as Administrator

Logging in as Administrator is demonstrated in the example below. The process requires writing 44 bytes which consist of the Role ID and Password. Password characters are 22 bytes and role characters are also 22 bytes. The logging in must be done using a single Modbus command, using Function 10H (Store Multiple Setpoints).

The following table shows data to be written to the relay to login as Administrator. The relay password in this example is 0.

Data Written to Relay to Login as Administrator

Description	Memory Map Address		Values to be Written	
	DEC	HEX	DEC	HEX
Role Characters 1 and 2	62242	F322	16740	4164
Role Characters 3 and 4	62243	F323	28009	6D69
Role Characters 5 and 6	62244	F324	28265	6E69
Role Characters 7 and 8	62245	F325	29556	7374
Role Characters 9 and 10	62246	F326	29281	7261
Role Characters 11 and 12	62247	F327	29807	746F

Description	Memory Map Address		Values to be Written	
	DEC	HEX	DEC	HEX
Role Characters 13 and 14	62248	F328	29184	7200
Role Characters 15 and 16	62249	F329	0	0000
Role Characters 17 and 18	62250	F32A	0	0000
Role Characters 19 and 20	62251	F32B	0	0000
Role Characters 21 and 22	62252	F32C	0	0000
Password Characters 1 and 2	62253	F32D	12288	3000
Password Characters 3 and 4	62254	F32E	0	0000
Password Characters 5 and 6	62255	F32F	0	0000
Password Characters 7 and 8	62256	F330	0	0000
Password Characters 9 and 10	62257	F331	0	0000
Password Characters 11 and 12	62258	F332	0	0000
Password Characters 13 and 14	62259	F333	0	0000
Password Characters 15 and 16	62260	F334	0	0000
Password Characters 17 and 18	62261	F335	0	0000
Password Characters 19 and 20	62262	F336	0	0000
Password Characters 21 and 22	62263	F337	0	0000

Login as Administrator Function Format

Slave#	Function	Data Starting Address	Number of Setpoints	Byte Count	Data 1	Data 2	Data 3	Data 4	Data 5	Data 6	Data 7	Data 8	Data 9
FE	10	F322	0016	2C	4164	6D69	6E69	7374	7261	746F	7200	0	0

Login as Administrator Function Format continued

Data 10	Data 11	Data 12	Data 13	Data 14	Data 15	Data 16	Data 17	Data 18	Data 19	Data 20	Data 21	Data 22
0	0	3000	0	0	0	0	0	0	0	0	0	0

Commands Using Modbus Function 10H (Store Multiple Setpoints)

Sending commands requires writing 4 bytes to the Command address register using the Modbus Function 10H (Store Multiple Setpoints). The 4 bytes are the function and the command values. The function value is always 05.

Modbus Commands Registers

Description	Memory Map Address	
	DEC	HEX
Command Register	40129	0x0080
Command Function Register	40130	0x0081

Examples of Command Values

Command Value	Value Description
1	Reset
96	Clear All Records
98	Clear Event Records

Command Value	Value Description
105	Clear Energy Use Data
4096	Force Vir I/P 1

Function Format for "Clear All" Command

Slave#	Function	Data Starting Address	Number of Setpoints	Byte Count	Data 1	Data 2
FE	10	0080	0002	04	0005	0060

Function Format for "Clear Energy Use Data" Command

Slave#	Function	Data Starting Address	Number of Setpoints	Byte Count	Data 1	Data 2
FE	10	0080	0002	04	0005	0069

Function Format for "Force Vir I/P 1" Command

Slave#	Function	Data Starting Address	Number of Setpoints	Byte Count	Data 1	Data 2
FE	10	0080	0002	04	0005	1000

Commands Using Modbus Function 05H (Execute Operation)

Specific command operations, such as described above, can also be performed using function code 05H.

Format for Function Code 05H

Master Transmission	Byte#	Example	Description
Slave Address	1	FE	Message for slave # 254
Function Code	1	05	Execute operation
Operation Code	2	00 01	Operation code
Code Value	2	FF 00	Perform function
CRC	2	DF 6A	CRC error code

Examples of Command Values

Command Value	Value Description
1	Reset
96	Clear All Records
98	Clear Event Records
105	Clear Energy Use Data
4096	Force Vir I/P 1

Function Format for Reset Command

Slave #	Function	Operation Code	Code Value
FE	05	0001	FF00

18.6.6 IEC 61850

This section describes how the IEC 61850 standard is applied to GE Vernova's products. It is not a description of the standard itself. The level at which this section is written assumes that the reader is already familiar with the IEC 61850 standard.

IEC 61850 is the international standard for Ethernet-based communication in substations. It enables integration of all protection, control, measurement and monitoring functions within a substation, and additionally provides the means for interlocking and inter-tripping. It combines the convenience of Ethernet with the security that is so essential in substations today.

Multilin Agile IEDs support both the IEC 61850 GOOSE and IEC 61850 MMS Server service as per IEC 61850 standard Ed. 2. The GOOSE messaging service provides the Multilin Agile IED the ability to Publish/Subscribe Digital Input and other element statuses and its Quality and Timestamp to/from other IEDs with supporting GOOSE messaging service. Server support allows remote control center, RTU/Gateway, local HMI or other client role devices access to the IED for monitoring and control. The configuration of IEC 61850 services is accomplished using the EnerVista Configuration Setup software.

18.6.6.1 BENEFITS OF IEC 61850

The standard provides:

- Standardised models for IEDs and other equipment within the substation
- Standardised communication services (the methods used to access and exchange data)
- Standardised formats for configuration files
- Peer-to-peer communication

The standard adheres to the requirements laid out by the ISO OSI model and therefore provides complete vendor interoperability and flexibility on the transmission types and protocols used. This includes mapping of data onto Ethernet, which is becoming more and more widely used in substations, in favour of RS485. Using Ethernet in the substation offers many advantages, most significantly including:

- Ethernet allows high-speed data rates (currently 100 Mbps, rather than tens of kbps or less used by most serial protocols)
- Ethernet provides the possibility to have multiple clients
- Ethernet is an open standard in every-day use
- There is a wide range of Ethernet-compatible products that may be used to supplement the LAN installation (hubs, bridges, switches)

18.6.6.2 IEC 61850 INTEROPERABILITY

A major benefit of IEC 61850 is interoperability. IEC 61850 standardizes the data model of substation IEDs, which allows interoperability between products from multiple vendors.

An IEC 61850-compliant device may be interoperable, but this does not mean it is interchangeable. You cannot simply replace a product from one vendor with that of another without reconfiguration. However, the terminology is pre-defined and anyone with prior knowledge of IEC 61850 should be able to integrate a new device very quickly without having to map all of the new data. IEC 61850 brings improved substation communications and interoperability to the end user, at a lower cost.

18.6.6.3 THE IEC 61850 DATA MODEL

The data model of any IEC 61850 IED can be viewed as a hierarchy of information, whose nomenclature and categorization is defined and standardized in the IEC 61850 specification.

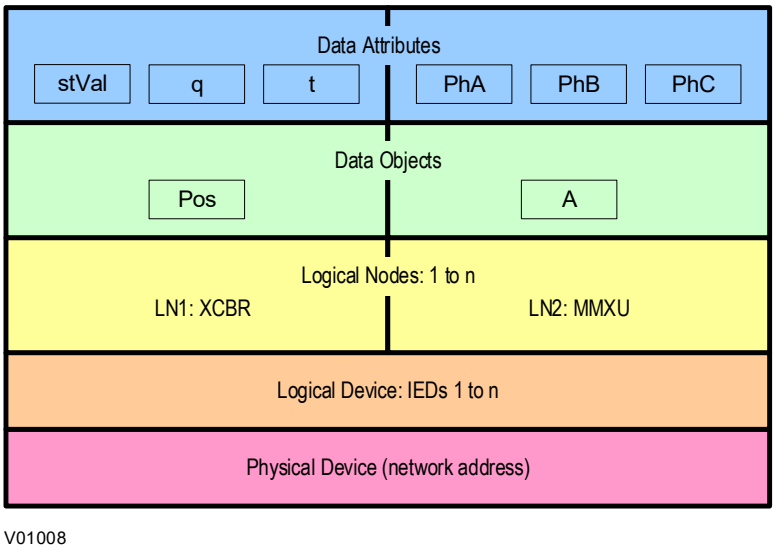

Figure 179: Data model layers in IEC 61850

The levels of this hierarchy can be described as follows:

Data Frame format

Layer	Description
Physical Device	Identifies the actual IED within a system. Typically the device's name or IP address can be used (for example Feeder_1 or 10.0.0.2.
Logical Device	Identifies groups of related Logical Nodes within the Physical Device. For the MiCOM IEDs, 5 Logical Devices exist: Control, Measurements, Protection, Records, System.
Wrapper/Logical Node Instance	The IEC 61850 Logical Device top-level data model consists of instances of Logical Nodes. The data model name for a Logical Node instance is constructed from an optional prefix (known as the wrapper), the Logical Node name, and an instance ID (or suffix). For example, XCBR1 (CB Control), MMXU1 (measurements), PTOF2 (overfrequency protection, stage 2).
Data Object	This next layer is used to identify the type of data you will be presented with. For example, Pos (position) of Logical Node type XCBR.
Data Attribute	This is the actual data (measurement value, status, description, etc.). For example, stVal (status value) indicating actual position of circuit breaker for Data Object type Pos of Logical Node type XCBR.

18.6.6.4 IEC 61850 IN IEDS

To communicate with an IEC 61850 IED on Ethernet, it is necessary only to know its IP address. This can then be configured into either:

- An IEC 61850 client (or master), for example a bay computer
- An HMI
- An MMS browser, with which the full data model can be retrieved from the IED, without any prior knowledge of the IED

The IEC 61850 compatible interface standard provides capability for the following:

- Read access to measurements
- Refresh of all measurements at a standard rate.

- Generation of non-buffered and buffered reports on change of status or measurement
- SNTP time synchronization over an Ethernet link. (This is used to synchronize the IEDs internal real time clock.
- GOOSE peer-to-peer communication
- Disturbance record extraction by IEC 61850 MMS file transfer. The record is extracted as an ASCII format COMTRADE file
- Controls (Direct and Select Before Operate)

18.6.6.5 IEC 61850 DATA MODEL IMPLEMENTATION

The data model is described in the Model Implementation Conformance Statement (MICS) document, which is available as a separate document.

18.6.6.6 IEC 61850 COMMUNICATION SERVICES IMPLEMENTATION

The IEC 61850 communication services which are implemented in the IEDs are described in the Protocol Implementation Conformance Statement (PICS) document, which is available as a separate document.

18.6.6.7 IEC 61850 PEER-TO-PEER (GOOSE) COMMUNICATIONS

The implementation of IEC 61850 Generic Object Oriented Substation Event (GOOSE) enables faster communication between IEDs offering the possibility for a fast and reliable system-wide distribution of input and output data values. The GOOSE model uses multicast services to deliver event information. Multicast messaging means that messages are sent to selected devices on the network. The receiving devices can specifically accept frames from certain devices and discard frames from the other devices. It is also known as a publisher-subscriber system. When a device detects a change in one of its monitored status points it publishes a new message. Any device that is interested in the information subscribes to the data it contains.

18.6.6.8 MAPPING GOOSE MESSAGES TO REMOTE INPUTS

Each GOOSE signal contained in a subscribed GOOSE message can be mapped to any of the remote inputs within the IEC61850 configuration. The remote inputs allow the mapping to internal logic functions for protection control, directly to output contacts or LEDs for monitoring.

An IED can subscribe to all GOOSE messages but only the following data types can be decoded and mapped to a remote input:

- BOOLEAN
- INT16
- INT32
- INT8
- UINT16
- UINT32
- UINT8

18.6.6.8.1 IEC 61850 GOOSE CONFIGURATION

All GOOSE configuration is performed using the software application.

18.6.6.9 ETHERNET DISCONNECTION

IEC 61850 **Associations** are unique and made between the client and server. If Ethernet connectivity is lost for any reason, the associations are lost, and will need to be re-established by the client. The IED has a **TCP_KEEPALIVE** function to monitor each association, and terminate any which are no longer active.

18.6.6.10 LOSS OF POWER

The IED allows the re-establishment of associations without disruption of its operation, even after its power has been removed. As the IED acts as a server in this process, the client must request the association. Uncommitted settings are cancelled when power is lost, and reports requested by connected clients are reset. The client must re-enable these when it next creates the new association to the IED.

18.6.6.11 IEC 61850 CONFIGURATION

The EnerVista Configuration settings application software provides an IEC 61850 Configurator tool, which allows the pre-configured IEC 61850 configuration file to be imported and transferred to the IED. As well as this, you can manually create configuration files for all products, based on their original IED capability description (ICD file).

Other features include:

- The extraction of configuration data for viewing and editing.
- A sophisticated error checking sequence to validate the configuration data before sending to the IED.

18.6.6.11.1 IEC 61850 NETWORK CONNECTIVITY

Configuration of the IP parameters is performed by the EnerVista Configuration IEC 61850 Configurator tool. If these parameters are not available using an SCL (Substation Configuration Language) file, they must be configured manually.

Every IP address on the Local Area Network must be unique. Duplicate IP addresses result in conflict and must be avoided.

The IED can be configured to accept data from other networks using the ***Gateway*** setting. If multiple networks are used, the IP addresses must be unique across networks.

Note:
Measurements Deadband changes in IEC 61850 settings take effect only after rebooting the IED.

18.7 TIME SYNCHRONISATION

In modern protection schemes it is necessary to synchronize the IEDs real time clock so that events from different devices can be time stamped and placed in chronological order. This is achieved in various ways depending on the chosen options and communication protocols.

- Using PTP (Precision Time Protocol) specified in IEEE Std 1588TM 2008 (PTP v2)
- Using the IRIG-B input
- Using the SNTP time protocol
- By using the time synchronization functionality inherent in the data protocols

The device is capable of receiving a time reference from several time sources in addition to its own internal clock for the purpose of time-stamping events, transient recorders and other occurrences within the device. The accuracy of the time stamp is based on the time reference that is used. The device supports an internal clock, PTP, IRIG-B and SNTP as potential time references.

The device acts as a ordinary clock, with only Sync and Pdelay_Req messages.

If two or more time sources are available, the time source with the higher priority shown in the Time Sources table is used where 1 is considered to be the highest priority.

Time Sources

Time Source	Priority
PTP (IEEE1588)	1*
IRIG-B	2*
SNTP	3
Internal Clock	4

* The priority of IRIG-B and PTP can be swapped.

Note:
Synchronization by IEC 60870-5-103, DNP3 and Modbus is not going to be issued if there is a sync source from IRIG-B or SNTP.

18.7.1 IEEE 1588 PRECISION TIME PROTOCOL (PTP VERSION 2)

The PTP settings are placed under the path: ***SETPOINT\DEVICE\DATE AND TIME\PTP***.

The PTP status can be viewed at ***DEVICE STATUS\PTP***.

The System Clock (device date and time) and RTC Sync Source (Type of synchronization in place) are available at ***DEVICE STATUS\CLOCK*** path.

18.7.1.1 FEATURE SUMMARY

The IED implements PTP functionality on each of its Ethernet ports independently, and automatically selects the port with the best time using the Best Master Clock Algorithm. Depending on the Cortec selection, the device will have one Ethernet port (ETHT1) or three (ETH1, ETH2, and ETH3) for redundancy. For HSR redundancy, only 2 step synchronisation is supported.

The IED may use PTP, IRIG-B, or SNTP time sources based on the user configuration or it may free-run if none of the time sources are available.

When both PTP and IRIG-B are enabled and time sources are available, the priority between the PTP and IRIG-B is user configurable.

PTP version 2 is supported and only the transport over IEEE 802.3/Ethernet PTP option is supported. PTP Version 1 is not supported.

Only the slave-only operation option is supported, master operation is not implemented.

Multilin Agile IED supports both 1-step and 2-step synchronisation on ingress. As the IED operates only in slave mode, it doesn't egress any synchronisation messages except peer delay request.

The peer delay mechanism is implemented, but in the requestor mode responder mode is not supported. The end-to-end delay mechanism is not implemented as it is forbidden by both Power and Power Utility Profiles.

The IED supports synchronising to the grandmasters with either Power Profile (IEEE C37.238: 2017) or Power Utility Profile (IEC61850 9-3).

Multilin Agile IED synchronises (meets the time accuracy requirements) within 15 seconds, given an error-free PP input and stable temperature.

The ALTERNATE_TIME_OFFSET_INDICATOR TLV in PP is not used to calculate local time zone.

18.7.1.2 SYSTEM OPERATION

The IED supports the Precision Time Protocol (PTP) specified in IEEE Std 1588TM 2008 (PTP v2). This enables the IED to synchronize to the international time standard over an Ethernet network that implements both the Power Profile (PP) specified in IEEE Std C37.238TM 2017 and Power Utility profile (PU) specified in IE61850 9-3.

Power profile specifies PTP message extensions that includes two TLVs (type, length, and values) as given below:

- IEEE_C37_238 TLV - providing additional information to monitor clock performance in real time
- ALTERNATE_TIME_OFFSET_INDICATOR TLV - providing local time zone information

*See IEEE C37.238-2017: clause 6 for more information on TLVs.

However, the usage of TLVs is made optional in IEEE Std C37.238 2017. The IED doesn't use the information provided in optional TLVs and tolerates the missing TLVs. When a master clock with power profile and power utility profile are available in network, the IED can synchronize to best master based on best master clock algorithm.

When the ETH1/2/3 PTP Function is enabled, Slave-only operation is supported, where a grandmaster is available on the port communication path, the Best Master Clock Algorithm selects the best master clock out of all the enabled ports, and the respective port state is set to SLAVE. The IED implements the state machine for slave-only implementation specified in PTP clause 9.2 independently on each Ethernet port.

When the Process Bus Module NW redundancy function is set to PRP or HSR, the general operating mode of duplicate detection and discard does not apply to PTP frames and PTP frames are processed as if the NW redundancy is disabled. The RCT of the ingress PTP messages is ignored and no RCT is appended to the egress PTP messages.

The paired ports (ETH2 & ETH3 in case of PRP) are considered independent and the specified state machines and Best Master Clock Algorithm are executed independently on both the paired ports.

18.7.2 IRIG-B

IRIG stands for Inter Range Instrumentation Group, which is a standards body responsible for standardising different time code formats. There are several different formats starting with IRIG-A, followed by IRIG-B and so on. The letter after the "IRIG" specifies the resolution of the time signal in pulses per second (PPS). IRIG-B, the one which we use has a resolution of 100 PPS. IRIG-B is used when accurate time-stamping is required.

The following diagram shows a typical GPS time-synchronised substation application. The satellite RF signal is picked up by a satellite dish and passed on to receiver. The receiver receives the signal and converts it into time signal suitable for the substation network. IEDs in the substation use this signal to govern their internal clocks and event recorders.

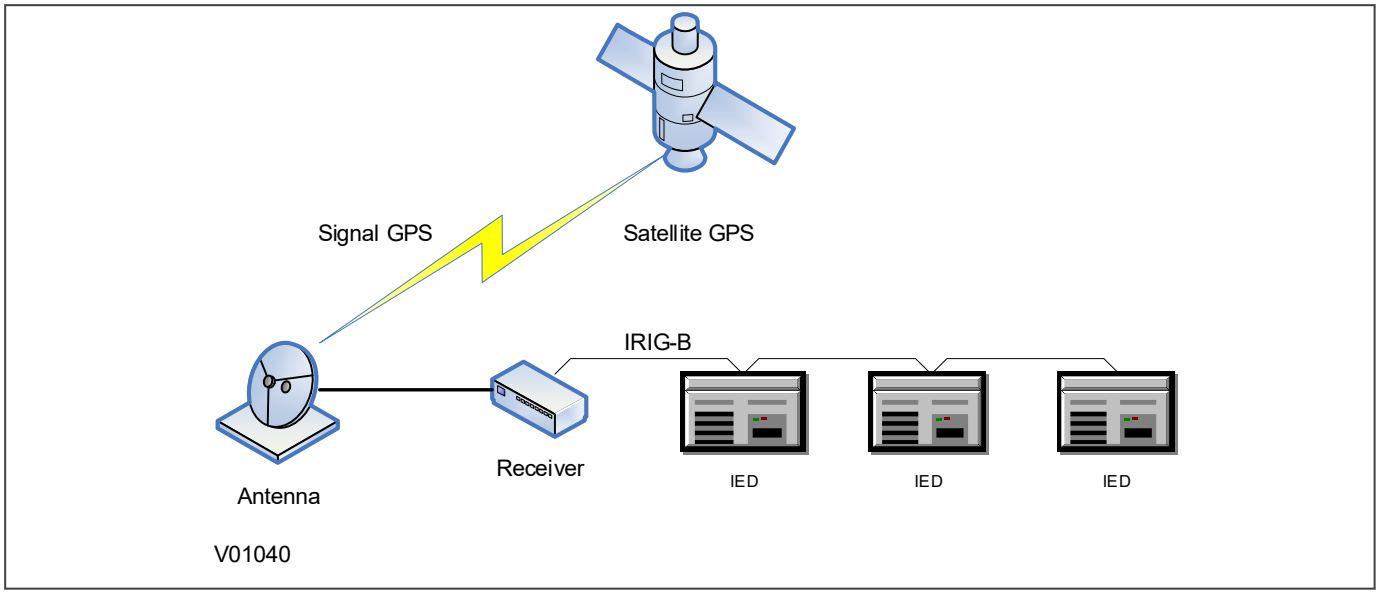

Figure 180: GPS satellite timing signal

The IRIG-B time code signal is a sequence of one second time frames. Each frame is split up into ten 100 mS slots as follows:

- Time-slot 1: Seconds
- Time-slot 2: Minutes
- Time-slot 3: Hours
- Time-slot 4: Days
- Time-slot 5 and 6: Control functions
- Time-slots 7 to 10: Straight binary time of day

The first four time-slots define the time in BCD (Binary Coded Decimal). Time-slots 5 and 6 are used for control functions, which control deletion commands and allow different data groupings within the synchronisation strings. Time-slots 7-10 define the time in SBS (Straight Binary Second of day).

18.7.2.1 DEMODULATED IRIG-B IMPLEMENTATION

All models have the option of accepting a demodulated IRIG-B input.

To set the device to use IRIG-B, Set the IRIG-B setting under path, ***SETPOINT\ DEVICE\ DATE AND TIME*** to Enabled.

The IRIG-B status can be viewed in the at ***DEVICE STATUS\ CLOCK\ RTC SYNC SOURCE***.

18.7.2.2 SNTP

SNTP is used to synchronise the clocks of computer systems over packet-switched, variable-latency data networks, such as IP.

The device is synchronised by the main SNTP server. This is achieved by entering the IP address of the SNTP server into the IED using the EnerVista Configuration Setup Software.

This function issues an alarm when there is a loss of time synchronisation on the SNTP server. This could be because there is no response or no valid clock signal.

Multilin Agile IEDs SNTP synchronisation may take up to 1-2 minutes, as it needs to get many time values and average them.

18.7.3 TIME SYNCHRONISATION USING THE COMMUNICATION PROTOCOLS

All communication protocols have in-built time synchronisation mechanisms. If an external time synchronisation mechanism such as IRIG-B, SNTP or PTP is not used to synchronise the devices, the time synchronisation mechanism within the relevant protocol is used. The real time is usually defined in the master station and communicated to the relevant IEDs via the rear port using the chosen protocol. It is also possible to define the time locally.

The time synchronisation for each protocol is described in the relevant protocol description section.

CHAPTER 19

CYBERSECURITY

19.1 OVERVIEW

In the past, substation networks were traditionally isolated and the protocols and data formats used to transfer information between devices were often proprietary.

For these reasons, the substation environment was very secure against cyber-attacks. The terms used for this inherent type of security are:

- Security by isolation (if the substation network is not connected to the outside world, it cannot be accessed from the outside world).
- Security by obscurity (if the formats and protocols are proprietary, it is very difficult to interpret them).

The increasing sophistication of protection schemes, coupled with the advancement of technology and the desire for vendor interoperability, has resulted in standardisation of networks and data interchange within substations. Today, devices within substations use standardised protocols for communication. Furthermore, substations can be interconnected with open networks, such as the internet or corporate-wide networks, which use standardised protocols for communication. This introduces a major security risk making the grid vulnerable to cyber-attacks, which could in turn lead to major electrical outages.

Clearly, there is now a need to secure communication and equipment within substation environments. This chapter describes the security measures that have been put in place for our range of Intelligent Electronic Devices (IEDs).

Note:
Cybersecurity compatible devices do not enforce NERC compliance, they merely facilitate it. It is the responsibility of the user to ensure that compliance is adhered to as and when necessary.

This chapter contains the following sections:

Overview 442
The Need for Cybersecurity 443
Standards 444
Cybersecurity Implementation 452
RBAC User Management Cybersecurity Configuration Tool 466

19.2 THE NEED FOR CYBERSECURITY

Cybersecurity provides protection against unauthorised disclosure, transfer, modification, or destruction of information or information systems, whether accidental or intentional. To achieve this, there are several security requirements:

- Confidentiality (preventing unauthorised access to information)
- Integrity (preventing unauthorised modification)
- Availability/Authentication (preventing the denial of service and assuring authorised access to information)
- Non-repudiation (preventing the denial of an action that took place)
- Traceability/Detection (monitoring and logging of activity to detect intrusion and analyse incidents)

The threats to Cybersecurity may be unintentional (e.g. natural disasters, human error), or intentional (e.g. cyber-attacks by hackers).

Good Cybersecurity can be achieved with a range of measures, such as closing down vulnerability loopholes, implementing adequate security processes and procedures and providing technology to help achieve this.

Examples of vulnerabilities are:

- Indiscretions by personnel (users keep passwords on their computer)
- Bad practice (users do not change default passwords, or everyone uses the same password to access all substation equipment)
- Bypassing of controls (users turn off security measures)
- Inadequate technology (substation is not firewalled)

Examples of availability issues are:

- Equipment overload, resulting in reduced or no performance
- Expiry of a certificate preventing access to equipment

To help tackle these issues, standards organisations have produced various standards. Compliance with these standards significantly reduces the threats associated with lack of Cybersecurity.

19.3 STANDARDS

There are several standards, which apply to substation Cybersecurity. The standards currently applicable to GE Vernova's IEDs are NERC and IEEE1686.

Standard	Country	Description
NERC CIP (North American Electric Reliability Corporation)	USA	Framework for the protection of the grid critical Cyber Assets
BDEW (German Association of Energy and Water Industries)	Germany	Requirements for Secure Control and Telecommunication Systems
ANSI ISA 99	USA	ICS oriented then Relevant for EPU completing existing standard and identifying new topics such as patch management
IEEE 1686	International	International Standard for substation IED Cybersecurity capabilities
IEC 62351	International	Power system data and Comm. protocol
ISO/IEC 27002	International	Framework for the protection of the grid critical Cyber Assets
NIST SP800-53 (National Institute of Standards and Technology)	USA	Complete framework for SCADA SP800-82and ICS Cybersecurity
CPNI Guidelines (Centre for the Protection of National Infrastructure)	UK	Clear and valuable good practices for Process Control and SCADA security

19.3.1 NERC COMPLIANCE

The North American Electric Reliability Corporation (NERC) created a set of standards for the protection of critical infrastructure. These are known as the CIP standards (Critical Infrastructure Protection). These were introduced to ensure the protection of 'Critical Cyber Assets', which control or have an influence on the reliability of North America’s electricity generation and distribution systems.

These standards have been compulsory in the USA for several years now. Compliance auditing started in June 2007, and utilities face extremely heavy fines for non-compliance.

NERC CIP standards

CIP Standard	Description
CIP-002-1 Critical Cyber Assets	Define and document the Critical Assets and the Critical Cyber Assets
CIP-003-1 Security Management Controls	Define and document the Security Management Controls required to protect the Critical Cyber Assets
CIP-004-1 Personnel and Training	Define and Document Personnel handling and training required protecting Critical Cyber Assets
CIP-005-1 Electronic Security	Define and document logical security perimeters where Critical Cyber Assets reside. Define and document measures to control access points and monitor electronic access
CIP-006-1 Physical Security	Define and document Physical Security Perimeters within which Critical Cyber Assets reside
CIP-007-1 Systems Security Management	Define and document system test procedures, account and password management, security patch management, system vulnerability, system logging, change control and configuration required for all Critical Cyber Assets
CIP-008-1 Incident Reporting and Response Planning	Define and document procedures necessary when Cybersecurity Incidents relating to Critical Cyber Assets are identified

CIP Standard	Description
CIP-009-1 Recovery Plans	Define and document Recovery plans for Critical Cyber Assets

19.3.1.1 CIP 002

CIP 002 concerns itself with the identification of:

- Critical assets, such as overhead lines and transformers
- Critical cyber assets, such as IEDs that use routable protocols to communicate outside or inside the Electronic Security Perimeter; or are accessible by dial-up

Power Utility Responsibilities	GE Vernova's Contribution
Create the list of the assets	We can help the power utilities to create this asset register automatically. We can provide audits to list the Cyber assets

19.3.1.2 CIP 003

CIP 003 requires the implementation of a Cybersecurity policy, with associated documentation, which demonstrates the management's commitment and ability to secure its Critical Cyber Assets.

The standard also requires change control practices whereby all entity or vendor-related changes to hardware and software components are documented and maintained.

Power Utility Responsibilities	GE Vernova's Contribution
To create a Cybersecurity policy	We can help the power utilities to have access control to its critical assets by providing centralized Access control. We can help the customer with its change control by providing a section in the documentation where it describes changes affecting the hardware and software.

19.3.1.3 CIP 004

CIP 004 requires that personnel with authorized cyber access or authorized physical access to Critical Cyber Assets, (including contractors and service vendors), have an appropriate level of training.

Power Utility Responsibilities	GE Vernova's Contribution
To provide appropriate training of its personnel	We can provide Cybersecurity training

19.3.1.4 CIP 005

CIP 005 requires the establishment of an Electronic Security Perimeter (ESP), which provides:

- The disabling of ports and services that are not required
- Permanent monitoring and access to logs (24x7x365)
- Vulnerability Assessments (yearly at a minimum)
- Documentation of Network Changes

Power Utility Responsibilities	GE Vernova's Contribution
To monitor access to the ESP To perform the vulnerability assessments To document network changes	To disable all ports not used in the IED To monitor and record all access to the IED

19.3.1.5 CIP 006

CIP 006 states that Physical Security controls, providing perimeter monitoring and logging along with robust access controls, must be implemented and documented. All cyber assets used for Physical Security are considered critical and should be treated as such:

Power Utility Responsibilities	GE Vernova's Contribution
Provide physical security controls and perimeter monitoring Ensure that people who have access to critical cyber assets don't have criminal records	GE Vernova cannot provide additional help with this aspect

19.3.1.6 CIP 007

CIP 007 covers the following points:

- Test procedures
- Ports and services
- Security patch management
- Antivirus
- Account management
- Monitoring
- An annual vulnerability assessment should be performed

Power Utility Responsibilities	GE Vernova's Contribution
To provide an incident response team and have appropriate processes in place	Test procedures, we can provide advice and help on testing Ports and services, our devices can disable unused ports and services Security patch management, we can provide assistance Antivirus, we can provide advise and assistance Account management, we can provide advice and assistance Monitoring, our equipment monitors and logs access

19.3.1.7 CIP 008

CIP 008 requires that an incident response plan be developed, including the definition of an incident response team, their responsibilities and associated procedures.

Power Utility Responsibilities	GE Vernova's Contribution
To provide an incident response team and have appropriate processes in place.	GE Vernova Vernova cannot provide additional help with this aspect.

19.3.1.8 CIP 009

CIP 009 states that a disaster recovery plan should be created and tested with annual drills.

Power Utility Responsibilities	GE Vernova's Contribution
To implement a recovery plan	To provide guidelines on recovery plans and backup/restore documentation

19.3.2 IEEE 1686-2013

IEEE 1686-2013 is an IEEE Standard for substation IEDs' Cybersecurity capabilities. It proposes practical and achievable mechanisms to achieve secure operations.

The following features described in this standard apply:

- Passwords are 8 characters long and can contain upper-case, lower-case, numeric and special characters.
- Passwords are never displayed or transmitted to a user.
- IED functions and features are assigned to different password levels. The assignment is fixed.
- The audit trail is recorded, listing events in the order in which they occur, held in a circular buffer.
- Records contain all defined fields from the standard and record all defined function event types where the function is supported.
- No password defeat mechanism exists. Instead a secure recovery password scheme is implemented.
- Unused ports (physical and logical) may be disabled.

19.3.3 IEC 62351

IEC 62351 is a standard developed for handling the security of IEC TC 57 series of protocols including IEC 60870-5 series, IEC 60870-6 series, IEC 61850 series, IEC 61970 series & IEC 61968 series. The different security objectives include authentication of data transfer through digital signatures, ensuring only authenticated access, prevention of eavesdropping, prevention of playback and spoofing, and intrusion detection.

The Roles described in chapter 62351-8 apply. The table below shows predefined roles, IDs and permissions assignment according to it:

VALUE	ROLE NAME (REVISION =1)	PERMISSION									
		LISTOBJECTS	READVALUES (READ)	DATASET	REPORTING	FILEREAD	FILEMNGT	CONTROL	CONFIG	SETTINGGROUP	SECURITY
<0>	VIEWER	x	C	x	C_1						
<1>	OPERATOR	x	x	x	C_1			x		x	
<2>	ENGINEER	x	x	x	X_1	X_1	X_1		x	x	
<3>	INSTALLER	x	x	x	X_2	X_2			x	x	
<4>	SECADM	x	x		X_4	X_4	X_4		x		x
<5>	SECAUD	x	x	x	X_1						
<6>	RBACMNT	x	x				X_4		x		
<7> (*1)	ADMINISTRATOR	x	x	x	x	x	x	x	x	x	x
<7, …, 32767>	RESERVED	For future use of IEC defined roles.									
<-32768, …, -1>	PRIVATE	Defined by external agreement. Not guaranteed to be interoperable.									

VALUE	ROLE NAME (REVISION =1)	PERMISSION									
		LISTOBJECTS	READVALUES (READ)	DATASET	REPORTING	FILEREAD	FILEMNGT	CONTROL	CONFIG	SETTINGGROUP	SECURITY
C = Conditional read access, clarification of specific data objects might be necessary (e.g., VIEWER may not access security settings, but process values) C_1 = Conditional read access to files or filetype data X_1 = Access to files of type data and config X_2 = Access to files of type config and firmware (updates) X_3 = Access to files of type audit log X_4 = Access to files of type security (config) (*1) ADMINISTRATOR is a LEGACY predefined role containing full permissions assignation. The ADMINISTRATOR is a pre-configured role using the <7> first available IEC RESERVED role. The role ID value is configurable in EnerVista for all roles (but the first 6 currently fixed by the standard), so the user can change the ID to another value if needed (from 7 till 32767 and from -1 till -32768).											

Permissions Definition

As there is not enough granularity in the permissions to accomplish all the filters and assignments to the different roles, some new permissions have been added to the ones predefined by the standard, e.g. to differentiate the FILEMNGM, the FW Upgrade, etc.

Below is the list of permissions implemented:

Permission ID	Name	Comment
1	LISTOBJECTS	View settings names/traverse settings (except security settings)
2	READVALUES	View non security settings values, view PSL, view 61850
3	DATASET	Configure and edit 61850
4	REPORTING	View status, metering
5	FILEREAD	Read configuration file, read events reports, read waveforms reports, read fault reports, read disturbance records
6	FILEWRITE	Write configuration file, create/edit configuration project, import SCL
7	FILEMNGT	Clear records, restore defaults, export SCL, delete configuration project
8	CONTROL	Command Breaker, Reset
9	CONFIG	View non security settings, edit/configure all non-security settings, configure and Edit 61850, save settings
10	SETTINGGROUP	View non security settings, modify group control settings
11	SECURITY	View and modify security settings view, configure security, modify users and rbac
12 (*)	FILEREAD_SEC	Read sec audit log
13 (*)	FILEMNGT_SEC	Access to files of type security (config)
14 (*)	FWUPGRADE	Firmware upgrade

Note:
(*) ID's 1 to 11 are the set of permissions predefined by the standard, available for all device firmware releases.
ID's 12 to 14 are new customized permissions added, available from 08A release on.

With this permissions definition the roles are defined as follow:

Legacy Roles (Basic Security)

ID	Role	Permissions
0	VIEWER	1, 2, 4, 5
1	ADMINISTRATOR	1, 2, 3, 4, 5, 6, 7, 8, 9, 10, 11, 12, 13, 14
2	ENGINEER	1, 2, 3, 4, 5, 6, 7, 8, 9, 10
3	OPERATOR	1, 2, 4, 5, 8, 10

Standard Roles (Advanced Security):

ID	Role	Permissions
0 (*1)	VIEWER	1, 2, 4, 5
1 (*1)	OPERATOR	1, 2, 4, 5, 8, 10
2 (*1)	ENGINEER	1, 2, 3, 4, 5, 6, 7, 9, 10
3 (*1)	INSTALLER	1, 2, 4, 5, 6, 9, 10, 14
4 (*1)	SECADM	1, 2, 3, 5, 6, 9, 11, 13
5 (*1)	SECAUD	1, 2, 4, 12
6 (*1)	RBACMNT	1, 2, 9, 13
7 (*2)	ADMINISTRATOR	1, 2, 3, 4, 5, 6, 7, 8, 9, 10, 11, 12, 13, 14

Note:
*(*1) Role defined by the standard.*

Note:
*(*2) ADMINISTRATOR is a predefined role containing full permissions assignation. The ADMINISTRATOR role is pre-configured using the <7> first available IEC RESERVED role.*

There are two Cybersecurity options available in the Cortec.

Basic Security where there are 4 fixed roles/users: Administrator, Engineer, Operator and Viewer.

Administrator: Has all the permissions to perform a firmware upgrade, change of parameters, change of security settings, CID read/write, read data files, issue commands, and read all the values from the device.

Engineer: Change of parameters, CID read/write, read data files, issue commands, and read values from the device.

Operator: Issue commands and read values of the device.

Viewer: This user can only read values from the device.

In Advanced Security the device has up to 20 configurable users. Each user will have a configurable username and password, and it could select one role from the standard and new user defined roles. As stated in the standard, there is the possibility to redefine new roles, adjusting the name, ID and permissions for each new defined role. There is no possibility of role combination.

For more detailed information of users and rights/permission definition see the list below:

User/Role Definition:

VIEWER (*1): Can view what objects are present within a Logical-Device by presenting the type ID of those objects.

OPERATOR (*1): An operator can view what objects and values are present within a Logical Device by presenting the type ID of those objects as well as perform control actions.

ENGINEER (*1): An engineer can view what objects and values are present within a Logical Device by presenting the type ID of those objects. Moreover, an engineer has full access to DateSets and Files and can configure the server locally or remotely.

INSTALLER (*2): An installer can view what objects and values are present within a Logical Device by presenting the type ID of those objects. Moreover, an installer can write files and can configure the server locally or remotely.

SECADM (*2): Security administrator can change subject-to-role assignments (outside the device) and role-to-right assignment (inside the device) and validity periods; change security setting such as certificates for subject authentication and access token verification.

SECAUD (*2): Security auditor can view audit logs.

RBACMNT (*2): RBAC management can change role-to-right assignment.

ADMINISTRATOR (*1): Has All read/write access.

RESERVED (*2): This user/role can be defined by the user adjusting name, ID and permissions for each new defining role.

Note:
*(*1) Roles applying to both Basic and Advanced Cybersecurity.*

Note:
*(*2) Roles only applying to Advanced Cybersecurity.*

Rights/Permissions Definition:

- **VIEW/LISTOBJECTS (*1)**: Allows the subject/role to discover what objects are present within a Logical Device by presenting the type ID of those objects.
- **READ/READVALUES (*1)**: Allows the subject/role to obtain all or some of the values in addition to the type and ID of objects that are present within a Logical-Device.
- **DATASET (*1)**: Allows the subject/role to have full management rights for both permanent and non-permanent DataSets.
- **REPORTING (*1)**: Allows a subject/role to use buffered reporting as well as un-buffered reporting.
- **FILEREAD (*1)**: Allows the subject/role to have read rights for file objects.
- **FILEWRITE (*1)**: Allows the subject/role to have write rights for file objects. This right includes the FILEREAD right.
- **FILEMNGT (*1)**: Allows the role to transfer files to the Logical-Device, as well as delete existing files on the Logical- Device.
- **CONTROL (*1)**: Allows a subject to perform control operations.
- **CONFIG (*1):** Allows a subject to locally or remotely configure certain aspects of the server.
- **SETTINGGROUP (*1)**: Allows a subject to remotely configure Settings Groups.

- **SECURITY (*1)**: Allows a subject/role to perform security functions at both a Server/Service Access Point and Logical-Device basis.
- **FILEREAD_SEC (*2)**: Allows a subject/role to read sec audit log.
- **FILEMNGT_SEC (*2)**: Allows a subject/role to access to files of type security (config).
- **FWUPGRADE (*2)**: Allows a subject/role to perform firmware upgrade.

Note:
*(*1) Standard defined permissions. Available for all device firmware releases.*

Note:
*(*2) New customized permissions added. Available from 08A release on.*

19.4 CYBERSECURITY IMPLEMENTATION

GE Vernova's products have always been and will continue to be equipped with state-of-the-art security measures. Due to the ever-evolving communication technology and new threats to security, this requirement is not static. Hardware and software security measures are continuously being developed and implemented to mitigate the associated threats and risks.

This section describes the current implementation of Cybersecurity. The bulk of the implementation consists of RBAC (Role Based Access Control) Cybersecurity mode, Centralised Authentication, Remote Logging and System Hardening. The features are compliant with NERC-CIPv6 and IEEE 1686. This is valid for the release of platform software to which this manual pertains.

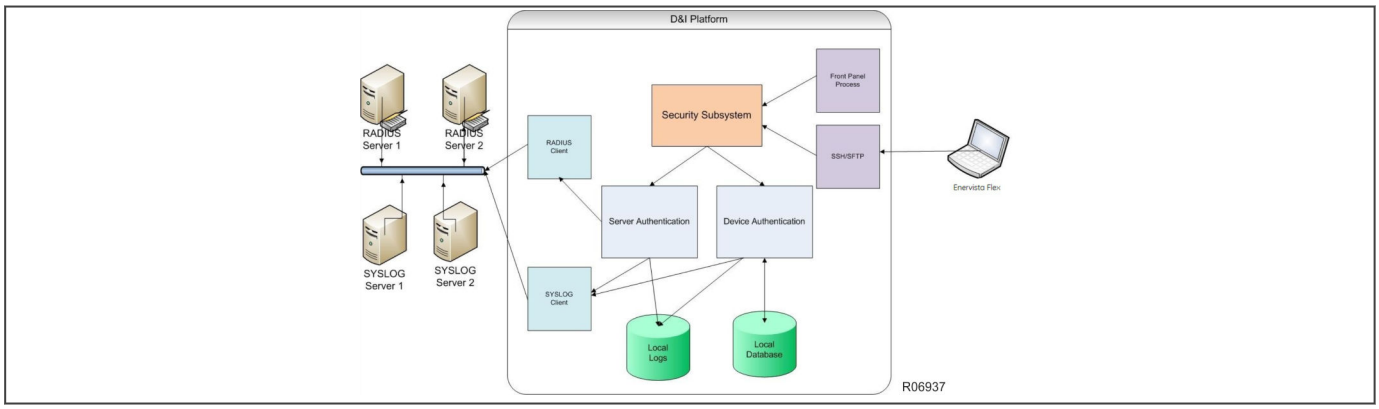

Figure 181: Cybersecurity implementation

Two levels of Cybersecurity are available:

- Basic Cybersecurity
- Advanced Cybersecurity

Basic Cybersecurity includes the following security features:

- Device/Local Authentication
- Four-level access: Fixed local users and roles (Administrator, Engineer, Operator, Viewer)
- ByPass Access
- Password complexity
- Disabling of unused physical and logical ports
- Flag for Failed authentication
- User lockout for configurable period
- Inactivity time out

Advanced security includes additional security features as follows:

- Remote/Server Authentication (supports RADIUS and Legacy LDAP)
- Local authentication with up to 20 configurable users, with configurable roles, username and passwords
- Secure encrypted communication (Modbus/SSH, SFTP)
- Syslog
- Increased product hardening

19.4.1 RBAC FUNCTIONALITY

Role based access control, RBAC, is the core of session management. Every login attempt will connect to the RBAC service and it will allow or deny the login of the user.

In Basic Security, default connection is done as Viewer, without password requirement.

In case of Advanced Security, a username and password will be required. If the login is successful, the access level will correspond to the role defined to this user.

The user cannot change its own role. So, in case of more rights needed, another different user with the corresponding role should be logged in.

The maximum number of concurrent sessions is only one for all roles, except of Viewer role, which has the limit of 5 sessions.

There is a session timeout adjustable by settings. This timeout means that open sessions are automatically closed if they remain inactive till the timer elapses. This inactivity timer defines the period that IED waits in idleness before a logged in user will be automatically logged out. This timeout is different for HMI interface and other interfaces (Serial, Ethernet, etc).

There is a lockout period adjustable by settings. For each account, when a maximum number of failed login attempts is reached, it is locked during the specified period. It doesn't matter the interface the login comes from. The account will be unlocked at the first successful login passed the lockout period.

If the Authentication Method setting is changed, the logged in user will be forced to logout.

19.4.2 BASIC SECURITY IMPLEMENTATION

19.4.2.1 DEVICE/LOCAL AUTHENTICATION

In Device Authentication mode, IED provide local RBAC Server security. The IED supports unique device usernames, and stores device passwords securely. For password encryption, PBKDF2 with SHA256 and a unique 64bits salt per user is used.

Only Administrator can change other user's passwords. All device users can change their own passwords. For password reset/recovery procedure the Administrator role will be required.

Viewer access level has no password associated and is the default connection to the device. Default password for Administrator, Engineer and Operator access levels is 0.

19.4.2.2 FOUR-LEVEL ACCESS

Basic IED Security supports 4 fixed roles: Administrator, Engineer, Operator and Viewer. The fixed local usernames match with these roles.

All the roles are password protected except the Viewer. A Viewer connection is directly logged in without entering a password using front panel or any communication port.

The different features of each role or access level are shown in the table below, for Basic Security (Legacy):

Feature		Administrator	Engineer	Operator	Viewer
Settings	Security settings	RW	R	R	R
	Change own PW	Yes	Yes	Yes	X
	Change own PW (Advanced security)	Yes	Yes	Yes	Yes
	Create New/Modify users, assign roles (advanced security OC)	RW	X	X	X
	Non-Security settings	RW	RW	R	R
	FlexLogic	RW	RW	R	R
	IEC 61850 settings	RW	RW	R	R
	Factory Settings	X	X	X	X
Commands	Date change	RW	RW	X	X
	BKR related	RW	RW	RW	X
	Clear records	RW	X	X	X
	Restore Defaults	RW	X	X	X
	RESET	W	W	W	X
File	Config File read	R	R	R	R
	Config File write	W	W	X	X
Firmware Upgrade		W	X	X	X
Upload FW		W	X	X	X
Actual Values	Status	R	R	R	R
	Metering	R	R	R	R
Reports	Events	R	R	R	R
	Waveforms	R	R	R	R
	Security Audit log	R	R	X	X

19.4.2.3 BYPASS ACCESS

The 'Bypass Access' feature allows to bypass security authentication. Once this setting is other than 'Disabled", then user gets Administrator access rights on configured interface. For example, if user configures it as 'Local" then no user authentication is needed for accessing over USB or HMI. Other possible option is to bypass authentication for 'HMI only" where user can view and modify all the settings, view actual values or execute commands. The bypass security feature provides an easier access, with no authentication and encryption. Therefore, the use of this feature should be restricted only in commissioning phase or when it is considered safe. Only the Administrator, can enable this feature.

19.4.2.4 ENHANCED PASSWORD SECURITY

When Password complexity setpoint is set to 'Enabled”, it allows user to configure password strings which adhere to complexity rules defined below. When the setting is configured as 'Disabled” then user can change the password to any string with max length of 20 characters.

Password complexity has the following features:

- Passwords cannot contain the user's account name or parts of the user's full name that exceed two consecutive characters.
- Must be at least 8 characters in length. Max length can be 20 ASCII char
- Passwords must contain characters from all four categories:
  - English uppercase characters (A through Z).
  - English lowercase characters (a through z).
  - Numeric: Base 10 digits (0 through 9).
  - Special non-alphanumeric (such as @,!,#,{, but not limited to only those, etc.)

The IED supports encryption for passwords. The encryption algorithm used is PBKDF2 with SHA256 and a unique 64bits salt per user, where this salt is generated randomly.

19.4.2.5 DISABLING PHYSICAL AND LOGICAL PORTS

To secure your system it is advised to harden the product (product hardening) by disabling the unused protocols and physical ports. This is the simplest method to ensure lesser security risk. The IED offers possibility to enable or disable protocols / ports based on the usage.

The IED supports the ability to turn off any of the following specific physical ports:

- front USB serial port
- rear port RS485
- Ethernet port

The IED supports the ability to turn off any of the following specific communication protocols:

- IEC 61850 (MMS and GOOSE)
- Modbus RTU
- Modbus TCP
- DNP3oE
- DNP3 Serial
- IEC 60870-5-103
- TFTP

Time synchronization protocols can be selectively enabled/disabled based on the configuration.

- IRIG-B
- SNTP

Services	Port Type	Port Numbers
Modbus TCP	TCP	502
DNP3oE	TCP	20000
	UDP	20000
IEC 61850 (MMS)	TCP	102
TFTP	UDP	69

Services	Port Type	Port Numbers
SFTP (SSH)	TCP	22

Note:
For data protocols, service availability and detailed information, refer to the Communication Interfaces section in the Communications chapter.

19.4.2.6 NON-ENCRYPTED/CLEAR TEXT MODBUS

Due to customers' requests to use 'plain' or 'non-encrypted' Modbus communication with SCADA applications for certain scenarios, the Modbus TCP setting under the ***DEVICE\COMMUNICATIONS\MODBUS*** path supports the following options:

Disabled: when the ***Modbus TCP*** setting is set to Disabled, the port 502 will be closed.

Enabled: when the ***Modbus TCP*** setting is set to Enabled, the legitimate user can read or write over plain Modbus using port 502 on successful authentication.

Read-Only (*): when the ***Modbus TCP*** setting is set to Read-Only, the legitimate user can only read over plain Modbus using port 502.

By default, the ***Modbus TCP*** Setting is set to Enabled.

User with 'Administrator' role can configure this setting. Once the setting is configured to other than Disabled, the IED will allow communication with a 3rd party SCADA application in plain text Modbus over port 502. Also, for configuration change, the relay will register a security event to identify the user.

Note:
EnerVista Configuration software will always communicate with the IED over SSH using port 22.

Note:
(*) Read-Only option only available for Basic Cybersecurity Cortec options. Advanced Cybersecurity will have just Disabled and Enabled options.

19.4.2.7 SECURITY EVENTS

Security Events can be displayed in EnerVista Configuration software at RECORDS\SECURITY EVENTS path.

'securelog.csv' file stores security events information. A total of minimum 1024 events are stored in a circular buffer in non-volatile memory. Once the file reaches its max limit, oldest event Will get over-written by newest security event.

The security events information supported & stored in events file for each event contains: Priority, Version, Timestamp, Host, Process Name, Message Id, IEC@41912 ID, Text and UsrID.

The timestamp is the UTC time.

This file will be stored on the IED and will be accessible from EnerVista Configuration software for user with "Administrator" role. For Basic security, this is the only file to give security audit information to user. And this file will be useful for advanced security user if in case syslog is not configured or non-functional due to some issue.

Note:
For firmware release Multilin Agile 8A and 8-Series 4.20, the security events can be visualized at RECORDS\SECURITY EVENTS path. Security Events files (securelog) are available for download, in "csv" and "txt" format, from the Service Report zip file that can be downloaded from the Online Window of the EnerVista Configuration software, clicking on the last icon from the right, called "Service Report".

19.4.3 ADVANCED CYBERSECURITY IMPLEMENTATION

In advanced cybersecurity device authentication, all users: Viewer, Administrator, Engineer and Operator, need to enter username as well as password to get access privileges. Default advanced cybersecurity password is ChangeMe1#.

For firmware releases of Multilin Agile prior to 8A or 8 Series prior to 4.20: The Advanced Cybersecurity was built on top of Basic Cybersecurity, providing Basic Cybersecurity options plus extra properties for Advanced Cybersecurity that were not available in Basic Cybersecurity.

For firmware releases of Multlin Agile 8A or 8 Series 4.20 onwards: Basic Cybersecurity is a legacy implementation. Advanced Cybersecurity is a separate Cybersecurity implementation fully configurable following the IEC 62351-8 standard.

19.4.3.1 PERMISSIONS VS ACCESS MATRIX/PERMISSION ASSIGNMENT

In Basic (legacy) security the access is managed with a matrix table based on roles (see Four-level Access in Basic Security Implementation section).

In Advanced Security the access is managed through permission set. The following table shows the different features managed by EnerVista Configuration software, and the permissions that the user shall have in order to write or read values in the different screens:

Feature		Write Permissions ID	Read Permission ID
Settings	Security settings	11+13	11+13
	Change own PW	Current User	N.A.
	Change all PW	13	13
	Create new/modify users, assign roles (advanced security)	13	13
	Non-security settings	9	2
	Flexlogic	9	2
	IEC 61850 settings	3	2
	Settings group	10	2
Commands	Data change	9	N.A.
	BKR related	8	N.A.
	Clear records	7	N.A.
	Restore defaults	7	N.A.
	RESET	8	N.A.
File Operations	Config file	6	5
Firmware Upgrade	Firmware upgrade	14	N.A.
Actual Values	Status	N.A.	2
	Metering	N.A.	2
Reports	Events	N.A.	5
	Waveforms	N.A.	5
	Security audit logs	N.A.	12

Note:
For permissions definition see Permission Definition table in IEC 62351 section.

19.4.3.2 SERVER/REMOTE AUTHENTICATION

The Server/Remote Authentication implementation varies between earlier releases and later releases.

For firmware releases prior to Multilin Agile 8A and 8-Series 4.20: The Server Authentication Mode **uses only RADIUS**.

Where the following RADIUS servers can be set as customer's central authentication server:

- FreeRADIUS server
- Microsoft NPS server
- RSA Authentication Manager

And where the RADIUS implementation supports the following authentication protocols:

- PEAPv0 with inner authentication method MS-CHAPv2 (To support Microsoft NPS server)
- EAP-TTLS with inner authentication method PAP (To support RSA AM)
- EAP with inner authentication method GTC (To support RSA AM)
- PAP (unsecured, to support any RADIUS server)

For Multilin Agile 8A and 8-Series 4.20 firmware releases and later: The Server Authentication Mode can use either **RADIUS** or **LDAP** where:

RADIUS:

Servers used as a central authentication server can be:

- FreeRADIUS server
- RSA Authentication Manager

Implementation supports the authentication protocols:

- PEAPv0 with inner authentication method MS-CHAPv2
- EAP-TTLS with inner authentication method PAP (To support RSA AM)
- PAP (unsecured, to support any RADIUS server)

LDAP:

Servers used as a central authentication server can be:

- Microsoft Active Directory server
- OpenLDAP

Implementation supports the authentication protocols:

- TCP
- STARTTLS

19.4.3.3 SERVER/REMOTE AUTHENTICATION (RADIUS)

In Server Authentication mode, the IED authenticates the user using RADIUS server. RADIUS client resides in the product and connects to the RADIUS server.

Customer can use any of the following RADIUS servers as their central authentication server

- FreeRADIUS server
- RSA Authentication Manager

RADIUS users and passwords are created in the server (in the Active Directory). Each RADIUS user should have a password (that meets the password policy of the Active Directory) and specific role assigned to in the Active Directory.

The relay supports 2 servers in the configuration for redundancy. The IED will try each in sequence until one respond. When the first RADIUS server is unavailable, the next server in the list is tried for RADIUS Authentication.

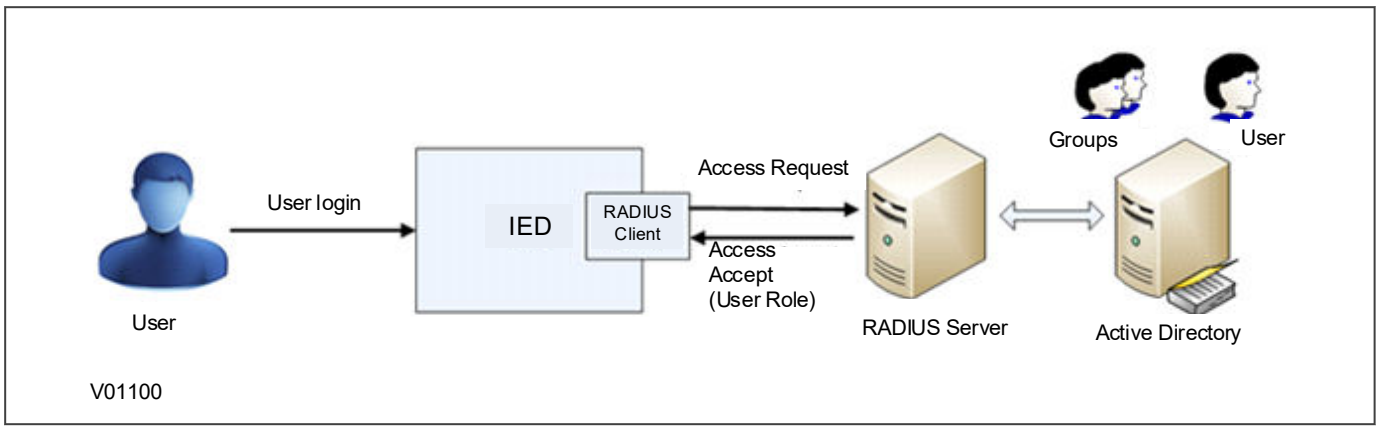

Figure 182: RADIUS server/client communication

The IED will first try the server 1 up to the configured number of retries leaving request timeout between each request. After this point, if it still does not have a valid answer from server 1, it switches to server 2 and repeats for up to the number of configured retries again. If it maxes out on retries on the second server, it gives up entirely on Server Authentication and fallback to device authentication (Only if Authentication Method Server and Device is selected). A "RADIUS Server unavailable" security event is also logged under this condition.

IED will authenticate and authorize RADIUS users using the following authentication stack:

- Primary Radius if enabled (stop on invalid credential failure, continue all other failures)
- Secondary Radius if enabled (stop on invalid credential failure, continue all other failures) The RADIUS implementation supports the following authentication protocols:
- PEAPv0 with inner authentication method MS-CHAPv2 (To support Microsoft NPS server)
- EAP-TTLS with inner authentication method PAP (To support RSA AM)
- PAP (unsecured, to support any RADIUS server)

The RADIUS implementation will query the Role ID vendor attribute and establish the logged in user security context with that role.

In case of Server Authentication mode but if the RADIUS server is not operational, IED will try Device Authentication.

Note:
For releases Multilin Agile 8A and 8-Series 4.20 and later, the default security settings are different to releases Multilin Agile 6A and 8-Series 4.10 and earlier, (e.g., RADIUS Port Prim and Sec settings in Multilin Agile 8A and 8-Series 4.20 releases are 2083, whereas in Multilin Agile 6A and 8-Series 4.10 they are 1812). Check the Multilin Agile 8A and 8-Series 4.20 default values set in your device and update them to the value needed for your security configuration.

19.4.3.4 SERVER/REMOTE AUTHENTICATION (LEGACY LDAP PULL MODEL)

The relay supports Legacy LDAP Pull Model. The PULL model with LDAP is explained in the IEC 62351-8 section.

In legacy projects will an LDAP repository (e.g., Windows Active Directory), RBAC information is limited to roles, and they are returned in a simple LDAP response after successful authentication of the user. The relay implements this legacy usage of LDAP.

RBAC and Legacy LDAP

In the RBAC model, users are assigned to roles through which they acquire permissions. A mapping between these generic permissions and device-specific actions is used to determine if a user has the right to perform a given action on a resource (object).

The RBAC data that changes more frequently is stored outside the device in an idendity provider repositoy which is the LDAP server in this case. This data includes user credentials, roles and associations between users and roles.

The table below explains the RBAC data versus LDAP data representation:

RBAC Data	LDAP Data
subject (user)	user
password	password
role	group
role-user association	membership (of a user in a group)

Communication Protocols

The implementation of LDAP supports two protocols: TCP and TCP over TLS, and For TCP over TLS supports STARTTLS.

TLSv 1.2 and above are supported. TLS versions below 1.2 are not supported.

LDAP Query and Access Token

For an already authenticated user, LDAP returns a token containing IEC 62351-8 groups that the user is a member of upon request (LDAP search request).

For better performance (faster queries) and to forge the correct LDAP query, the following input is required:

- **users OU**: The organizational unit where users reside. It is assumed that even in an existing LDAP server like Active Directory with a large number of users, users all reside in the same organizational unit.
- **roles OU**: The organizational unit where groups reside. Again, it is assumed that roles reside in one OU dedicated to this purpose.
- **base DN**: Ideally the nearest node to the above OUs that is also a direct or indirect parent of both. In fact, this value is used to limit the search area for user-group memberships. Consequently, both users and roles OU must be part of this domain.

The following figure shows an example LDAP tree:

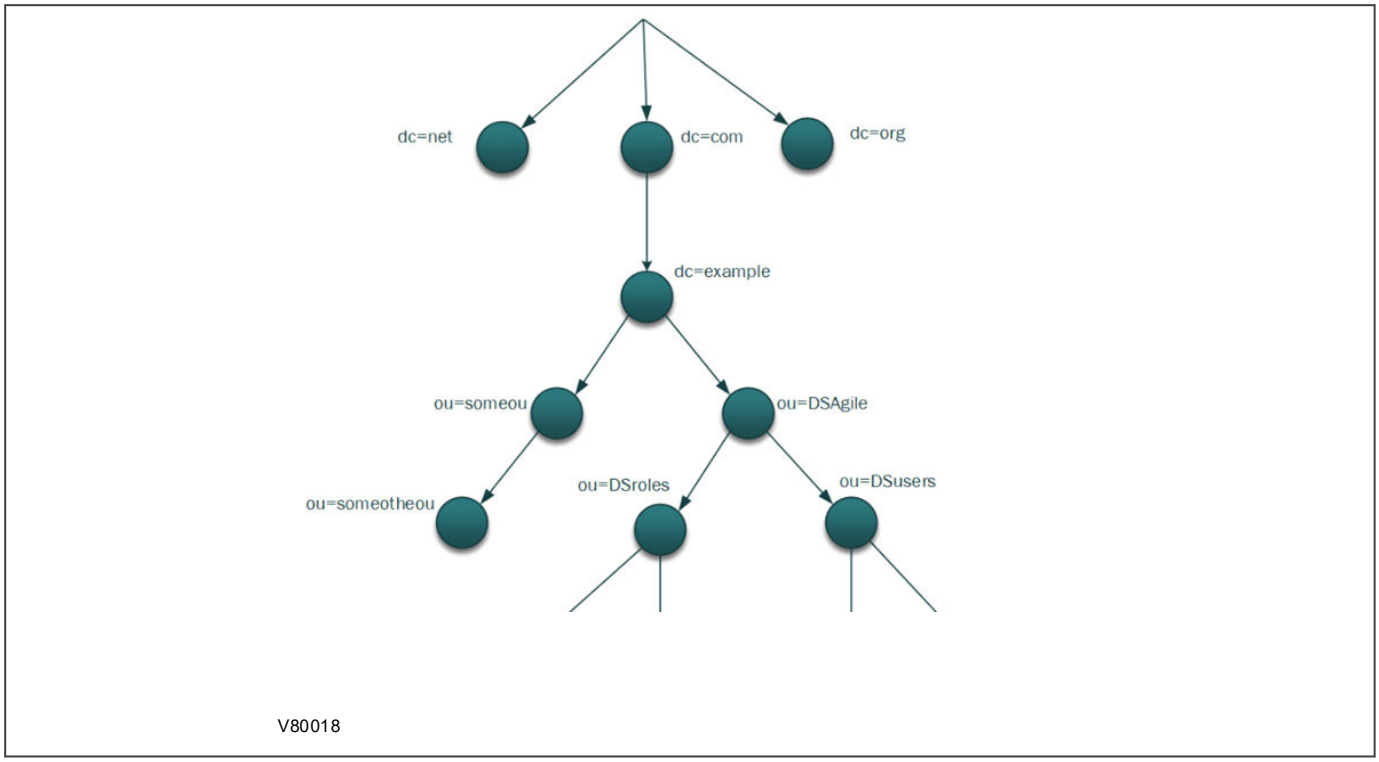

Figure 183: LDAP tree example

For the data structure shown above, the following shall be provided:

- **user OU**: ou=DSusers,ou=DSAgile,dc=example, dc=com
- **roles OU**: ou=DSroles,ou=DSAgile,dc=example, dc=om
- **based DN**: ou=DSAgile,dc=example,dc=com

Note:
For the base DN, we can also provide dc=example, dc=com but it will result in lower performance as the search area will be expanded unnecessarily.

Note:
In EnerVista configuration software user DN, roles DN and Based DN are to be provided for LDAP configuration. DN provided the full path, where OU provides the local path.

Configuration

The LDAP client in the device is configured using the "RBAC UserManagement" configuration tool embedded in the EnerVista configuration tool. For more information See LDAP configuration in the EnerVista configuration tool chapter.

Main and Backup Servers

Up to two LDAP servers can be defined. They will be called main and backup servers respectively. The main server is mandatory, and the backup server is optional.

At initialization, the main server is set as the working server.

If the main server becomes unavailable:

- The backup server is set as the working server.
- When the main server is up again, it will become the working server always taking precedence over the backup server.
- If the backup server also becomes inaccessible, the device will switch to local fallback mode.
- When the backup server is up again, it will become the working server and it will switch back to the remote mode, e.g. Legacy LDAP.

Summary:

- The main server always takes precedence over the backup server.
- Local fallback happens only when both servers are down.

An LDAP server can be considered down for a variety of reasons such as:

- It cannot be reached due to network issues or hardware issues.
- A secure TLS tunnel cannot be established due to a certificate issue, e.g., missing, invalid or revoked certificate, when communication protocol is set to StartTLS.

19.4.4 UNIQUE CONFIGURABLE USERNAMES

In 'Advanced Security', the user can configure up to 20 configurable user accounts. As part of this, user can configure a Username (length can be up to 20 ASCII char), Password for the username (in compliance with the Password complexity) and assign a supported user role (range: Administrator, Engineer, Operator, Viewer, any other role configured by the user).

The 'Administrator' is eligible to configure various accounts and modify passwords for all available accounts. Non-Admin users can only modify their own account password.

It is recommended to have more than one 'Administrator' account.

19.4.5 SECURE ENCRYPTED COMMUNICATION

19.4.5.1 MODBUS/SSH

Secure Shell (SSH) protocol provides a secure channel over an unsecured network by using a client-

server architecture. The SSH server reside in the IED. It securely encrypts the Modbus commands and data between the Toolsuite and itself using port forwarding.

SSH architecture is described in RFC4251 and is composed of three components:

- The transport Layer protocol (SSH-TRANS) – RFC 4253
- The User Authentication Protocol (SSH-USERAUTH) – RFC 4252
- The Connection Protocol (SSH-CONNECT) – RFC 4254

The port forwarding feature is available only on TCP/IP frames. UDP is not supported. The SSH server on the product runs on port 22.

It supports the Encryption Ciphers: RSA 2048, AES-128-CBC or AES-128-GCM, HMAC-SHA-256.

The SSH server has a timeout for authentication and disconnect if the authentication has not been accepted within the timeout period.

19.4.5.2 SFTP

SFTP (SSH File Transfer Protocol) is the file transfer protocol used with SSHv2. Provides secure file access, file transfer, and file management.

The SFTP commands will be limited for a given period of time to avoid DOS attacks and also implement role-based access to the file.

19.4.6 SYSLOG

The IED supports security event reporting through the Syslog protocol for supporting Security Information Event Management (SIEM) systems for centralized cyber security Monitoring over UDP and TCP protocols.

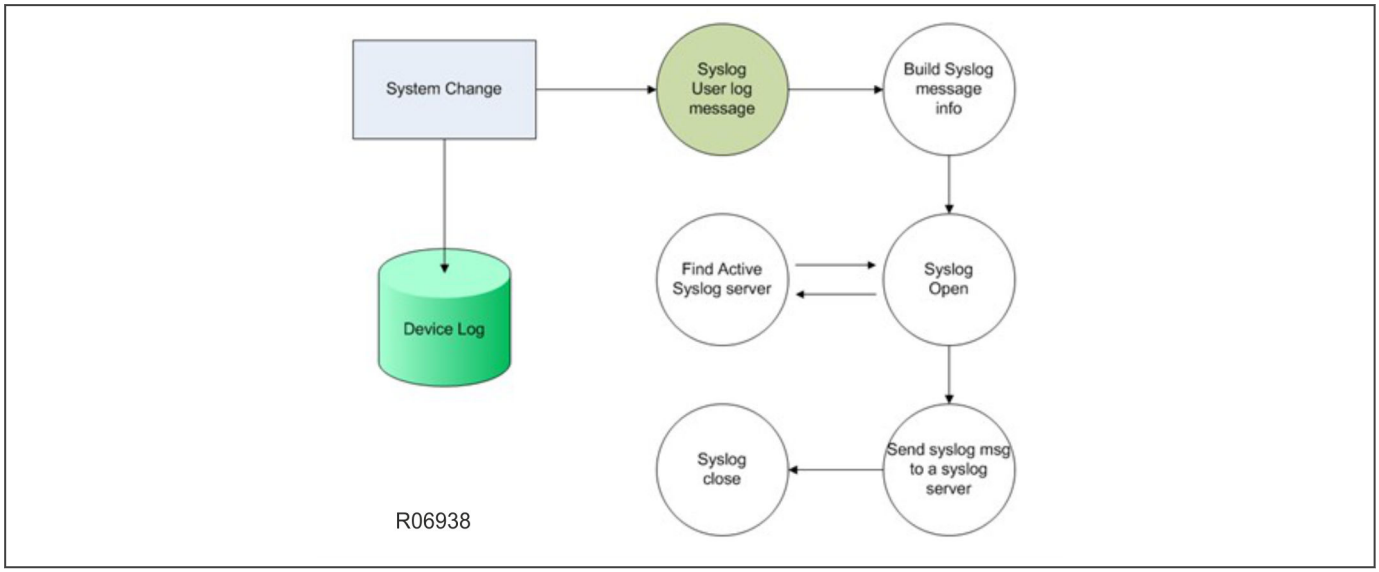

Figure 184: Syslog implementation

2 Syslog servers are supported in the configuration for redundancy. The IED will try each in sequence until one respond.

The IED logs to a remote syslog server:

- User log events, whether successful or unsuccessful
- Error log events
- Kernel error log events

Syslog Events

Mnemonic	LogType	IEC version	Severity	Cyber Security Event Numerical Event Identifier (ID)	Text (Single Space Between Each Consecutive Words)	Reference and Comments
LOGIN_OK	IEC 62351-14	1	notice	IEC 62351-14:1	Log-in successful	[IEEE 1686] specifies event logging for user successful login. In general, [IEC 62443-4-2] requires audit logs for access control.
LOGIN_OK_PW_EXPIRED	IEC 62351-14	1	notice	IEC 62351-14:2	Password expired, Log-in successful	[NERC-CIP-007-5] requires security policy. In case the entity local security policy allows a user to still login in, the course of its password expiry such as for handling a critical emergency situation, then this event would be useful. In general, [IEC 62443-4-2] requires audit logs for access control.
LOGIN_FAIL_WRONG_CR	IEC 62351-14	1	notice	IEC 62351-14:3	Log-in failed - wrong credentials	[NERC-CIP-007-5] requires cyber security respective logging for both successful and failed user logins. In general, [IEC 62443-4-2] requires audit logs for access control.
LOGIN_FAIL_3_TIMES	IEC 62351-14	1	alarm	IEC 62351-14:5	Log-in failed 3 times	[IEEE 1686] Although [IEEE 1686] mentions to log an event after 3 unsuccessful access attempts, the earlier this anomaly is logged the better cyber secured an entity can be.

Mnemonic	LogType	IEC version	Severity	Cyber Security Event Numerical Event Identifier (ID)	Text (Single Space Between Each Consecutive Words)	Reference and Comments
LOGIN_FAIL_SESSIONS_LIMIT	IEC 62351-14	1	alarm	IEC 62351-14:6	Log-in failed too many user sessions	[IEEE 1686] [NERC-CIP-007-5] requires cyber security respective logging for both successful and failed user logins. In general, [IEC 62443-4-2] requires audit logs for access control.
LOCK_USER_WRONG_CR	IEC 62351-14	1	alarm	IEC 62351-14:7	User locked - wrong credentials	[NERC-CIP-007-6] recommends limiting the number of unsuccessful access attempts and suggests measures for account lockout. In case the entity local security policy restricts its access to a user for a certain duration of time due to repeated certain failed number of logins attempts from that user, then it is necessary to generate a corresponding event. This type of event improves the security of an entity by reducing the brute force attack surface from an attacker.
LOGOUT_USER	IEC 62351-14	1	notice	IEC 62351-14:8	Log-out (user logged out)	[IEEE 1686] specifies event logging for user initiated log out.
LOGOUT_TIMEOUT	IEC 62351-14	1	notice	IEC 62351-14:9	Log-out by user inactivity (timeout)	[IEEE 1686] specifies event logging for user when the user is inactive after logging in for a certain duration of time.
SW_UPDATE_OK	IEC 62351-14	1	notice	IEC 62351-14:14	Software update was successful	[IEEE 1686] requires audit logging for firmware related aspects. A software is generic that also includes firmware.
SW_UPDATE_FAIL	IEC 62351-14	1	alarm	IEC 62351-14:15	Software update failed	
SYSLOG_EVENT_SETTING_CHANGE	IEC 62351-14	1	alarm	IEC 62351-14:1	Setting change	Setting change'. An event to indicate setting change(s). Origin: Username and IP address.
SYSLOG_EVENT_CLEAR_EVENT_RECORDS	IEC 62351-14	1	notice	IEC62351-14:1	Clear events	'Clear events command'. Clear event records command was issued. Origin: Username and IP address.
SYSLOG_EVENT_CLEAR_TRANSIENT_RECORDS	IEC 62351-14	1	notice	IEC62351-14:1	Clear transient records	'Clear transient records command'. Clear transient records command was issued. Origin: Username and IP address.
SYSLOG_EVENT_MODBUSTCP_ENABLED	IEC 62351-14	1	alarm	IEC62351-14:1	Modbus TCP enabled	ModbusTCP Enabled'. Port 502 has been opened for Read/ Write.
SYSLOG_EVENT_MODBUSTCP_DISABLED	IEC 62351-14	1	alarm	IEC62351-14:1	Modbus TCP disabled	ModbusTCP Disabled'. Port 502 closed
SYSLOG_EVENT_MODBUSTCP_READONLY	IEC 62351-14	1	alarm	IEC62351-14:1	Modbus TCP read only	'ModbusTCP ReadOnly'. Port 502 has been opened for Read Only operations.
SYSLOG_EVENT_BYPASS_ACCESS_ENABLED	IEC 62351-14	1	alarm	IEC62351-14:1	ByPass access enabled	'Bypass Access activated'. Bypass access has been activated.
SYSLOG_EVENT_BYPASS_ACCESS_DISABLED	IEC 62351-14	1	alarm	IEC62351-14:1	ByPass access disabled	'Bypass Access deactivated'. Bypass access has been deactivated.
	IEC 62351-14	1	notice	IEC62351-14:1 [IEC@41912 ID="2910:6"]	Configuration update has failed	Couldn't update configuration from given file. INVALID_CONFIGURATION_XML" UsrID="Application
	IEC62351-14	1	notice	IEC62351-14:1 [IEC@41912 ID="2910:8"]	Application configuration is valid	

Note:
For release Multilin Agile 8A and 8-Series 4.20 and later, forward, clear events, clear transient records syslog events are available for the user. FlexLogic operands are not available.
For all firmware releases, bypass access disabled, and bypass access enabled syslog events are available for the user. FlexLogic operands are not available.

19.4.7 INCREASED PRODUCT HARDENING

In Advanced security, the IED supports the ability to turn off the added features in encrypted communication. SSH and SFTP protocols on port 22 can be disabled.

19.4.7.1 ADDITIONAL FEATURES

The Advanced security option provides the properties listed below.

19.4.8 LOST PASSWORD

The relays allow modification of all user account passwords by user with “Administrator” privileges. Also, non-Admin users can update their own passwords.

For 'Advanced Security', it is recommended to have more than one user with 'Administrator' role. This will help in case 'Administrator' password is lost. Other local 'Administrator' account or Remote authentication user 'Administrator' can modify the password for the 'Administrator' whose password is lost.

If Remote authentication server is not configured or is unreachable, and if there is a single 'Administrator' configured on IED for Local authentication, then the only way to reset 'Administrator' password is to execute 'Service command' ***SETPOINTS\DEVICE\INSTALLATION*** path on HMI. This action will default passwords for all accounts.

To default passwords for all accounts, access IED from HMI as another role. Go to Settings -> Product setup -> Install: Screen will have option to enter 'Service command'. User can enter the command to reset passwords for all accounts.

Please, contact GE Vernova customer support to get the code to perform this action.

19.4.9 LOADING FACTORY CONFIGURATION

User needs to login as ‘Administrator’. Go to Security screen and then ‘Restore Defaults’ can be set to ‘Yes’.

19.4.10 ADDITIONAL FEATURES

In addition to all the Basic security features, the Advanced security option provides the properties listed below.

19.4.10.1 LOST PASSWORD

The relays allow modification of all user account passwords by user with “Administrator” privileges. Also, non-Admin users can update their own passwords.

For 'Advanced Security', it is recommended to have more than one user with 'Administrator' role. This will help in case 'Administrator' password is lost. Other local 'Administrator' account or Remote authentication user 'Administrator' can modify the password for the 'Administrator' whose password is lost.

If Remote authentication server is not configured or is unreachable, and if there is a single 'Administrator' configured on IED for Local authentication, then the only way to reset 'Administrator' password is to execute command from HMI. This action will default passwords for all accounts.

Access IED from HMI as another role. Go to Settings -> Product setup -> Install: Screen will have option to enter 'Service command'. User can enter the command to reset passwords for all accounts.

Please, contact GE customer support to get the code and perform this action.

19.4.10.2 LOADING FACTORY CONFIGURATION

User needs to login as ‘Administrator’. Go to Security screen and then ‘Restore Defaults’ can be set to ‘Yes’.

19.5 RBAC USER MANAGEMENT CYBERSECURITY CONFIGURATION TOOL

This section describes the "RBAC UserManagement" configuration tool used to configure Cybersecurity.

For Multillin Agile 8A release and later: The Cybersecurity configuration was done fully on Modbus settings placed at ***SETPOINTS\DEVICE\SECURITY*** path. See the figures below for more detail.

For firmware releases prior to Multilin Agile 8A: The Cybersecurity configuration is done partially using Modbus settings placed at ***SETPOINTS\DEVICE\SECURITY*** path, plus the use of the RBAC UserManagement Cybersecurity configuration tool through EnerVista software.

The "**RBAC UserManagement**" Cybersecurity configuration tool can be found at EnerVista configuration tool under Setpoints, this is at ***SETPOINTS\RBAC USERMANAGEMENT*** path. RBAC UserManagement is only accessible online when communicating with the device. The Modbus settings available at ***SETPOINTS\DEVICE\SECURITY \SECURITY CONFIG*** path, such as Bypass Access, Acc Timeout HMI, Pswd Complexity, Factory Service, Require PW for Reset Key, Require PW for D/T Change, Require PW for Control, are both available in the offline and online mode of EnerVista and can also be changed through the HMI menus.

Note:
The default security settings are different for later releases.

Note:
EnerVista Software configuration tool file conversion will not convert Cybersecurity settings from Multilin Agile 6A - 8A and 8-Series 4.10 - 4.20. The Cybersecurity settings for Multilin Agile 8A and 8-Series 4.20 should be entered directly on the device.

19.5.1 CYBERSECURITY MODBUS SETTINGS CONFIGURATION

For Multilin Agile 8A and 8-Series 4.20 the Modbus Cybersecurity settings are placed at ***SETPOINTS\DEVICE \SECURITY\SECURITY CONFIG*** path. All Modbus settings are the same for Basic and Advanced Cybersecurity, but the ***Bypass PW for RC*** setting is only available for Basic.

See the list of Modbus Cybersecurity settings below:

Setting Name	Default Value	Basic/Advanced
Factory Service	Disabled	Disabled
Restore Defaults	No	No
Acc Timeout HMI	5 min	5 min
Pswd Complexity	Enabled	Enabled
Bypass Access	Disabled	Disabled
Require PW for Reset Key	Enabled	Enabled
Require PW for D/T Change	Enabled	Enabled
Require PW for Control	Enabled	Enabled
Bypass PW For RC	Off	Off

19.5.1.1 CYBERSECURITY NON-MODBUS SETTINGS CONFIGURATION

For Multilin Agile 8A and 8-Series 4.20 the non-Modbus Cybersecurity settings can be configured when connecting online to the device through the EnerVista configuration software, using the **Rback UserManagement** configuration tool at ***SETPOINTS\RBAC USERMANAGEMENT*** path.

Below is an example of **RBAC UserManagement** screens for Cybersecurity configuration, for Users and Roles, Security Settings and Syslog Configuration.

19.5.1.2 USER MANAGEMENT CONFIGURATION

The **USER MANAGEMENT** screen initial screen is similar for Basic and Advanced security. The difference is that for Basic security the 4 fixed available users/roles can be used (Viewer, Administrator, Engineer and Operator) and for Advanced Cybersecurity up to 20 users can be created and managed.

Basic Security

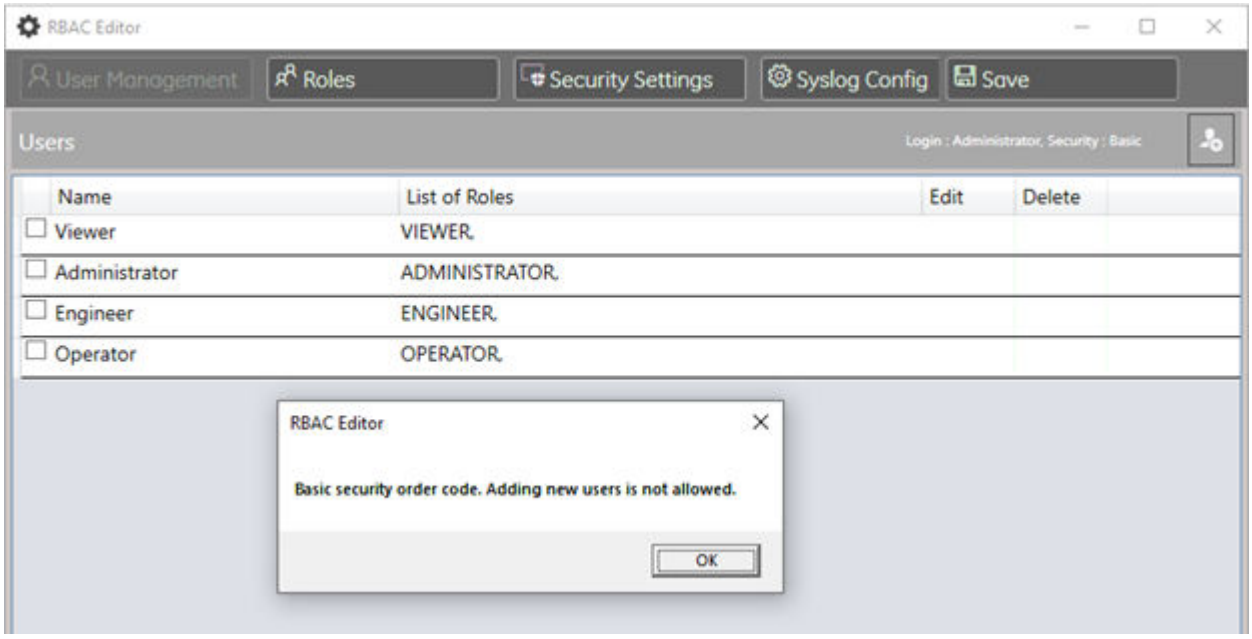

Figure 185: Basic secuity user management configuration (not configurable)

Advanced Security

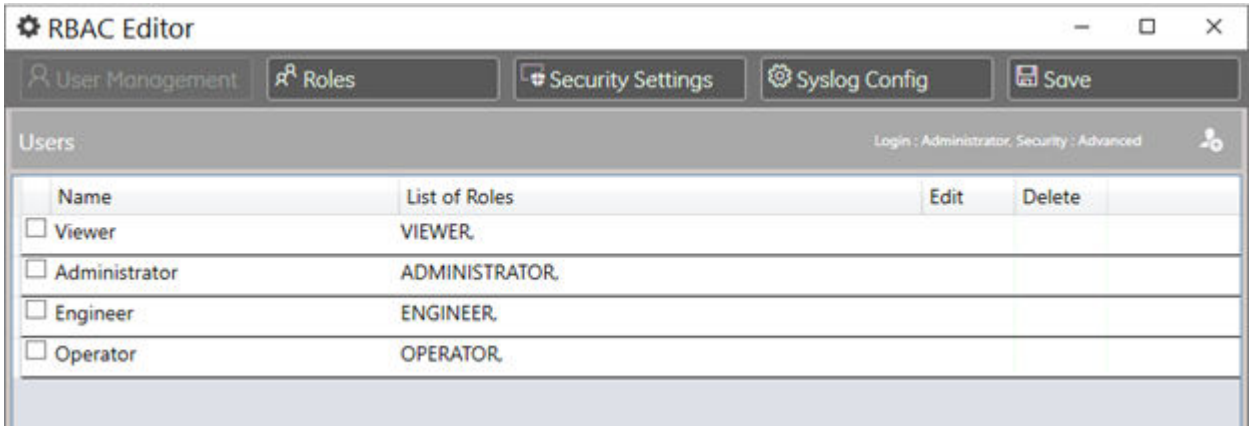

Figure 186: Advanced security user management configuration

In **Advanced Security** the device has up to 20 configurable users. Each user will have a configurable username and password, and can select one role from the standard and new user defined roles. As stated in the standard, there is the possibility to redefine new roles by adjusting the name, ID and permissions for each new defined role. It is not possible to combine roles.

The screens to configure new users in Advanced Security are as follows:

Click on the right side icon on the users screen:

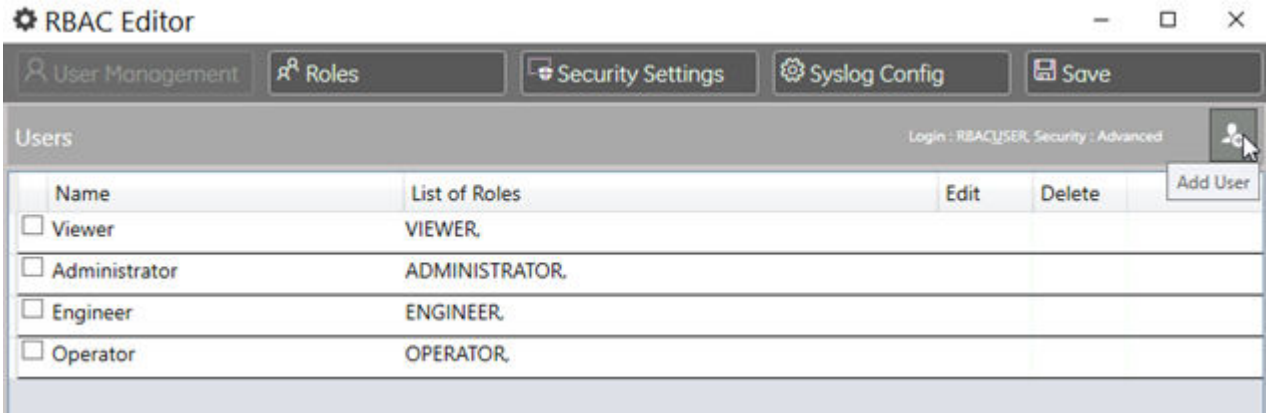

Figure 187: List of pre-configured users for advanced security

A **New User** window will open with a list of the already existing roles. In case a new role is needed it can be configured under the Roles window. See the list of pre-configured roles for Advanced Security.

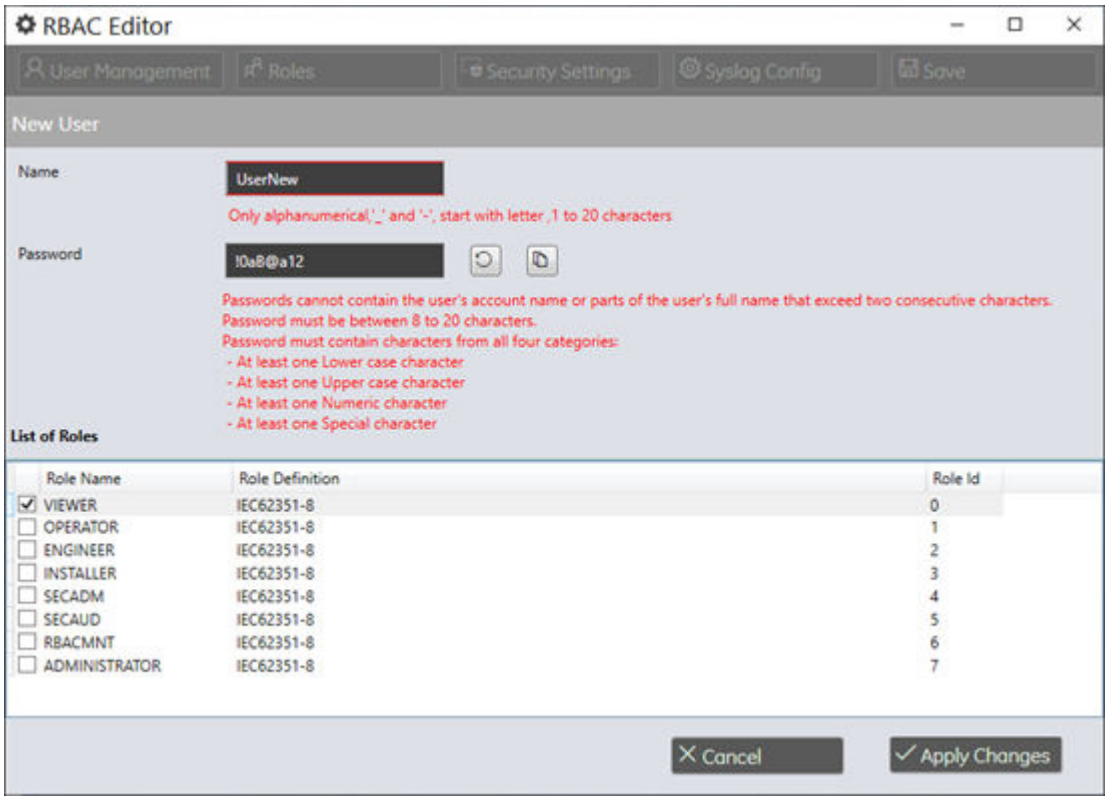

Figure 188: Entering new user name and password for advance security

Put a valid name following the rules for user's naming, select a valid password following the rules for passwords and click on the **Apply Changes** button that will be enabled when a valid name and password are entered. Once the changes are applied the new role will appear on the list of users available.

In this example a new user called "UserNew" has been created under the existing VIEWER role.

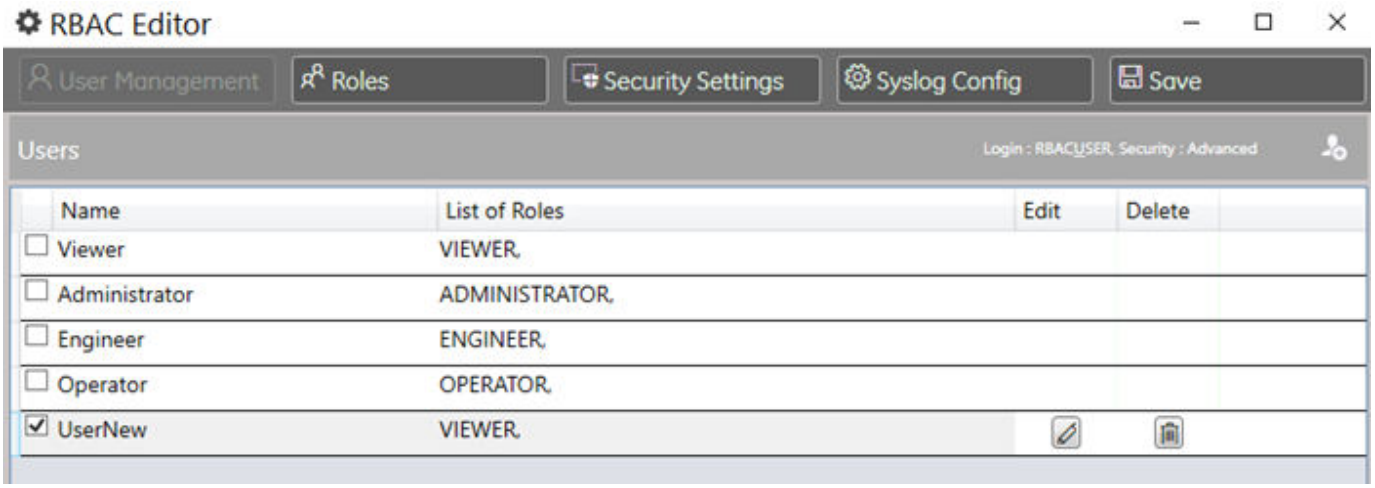

Figure 189: Example of new user creation for advanced security

For the configuration to be saved on the device, the **Save** button needs to be clicked, otherwise the configuration will not be saved. A warning message will appear if leaving the RBAC USERMANAGEMENT configurator without saving.

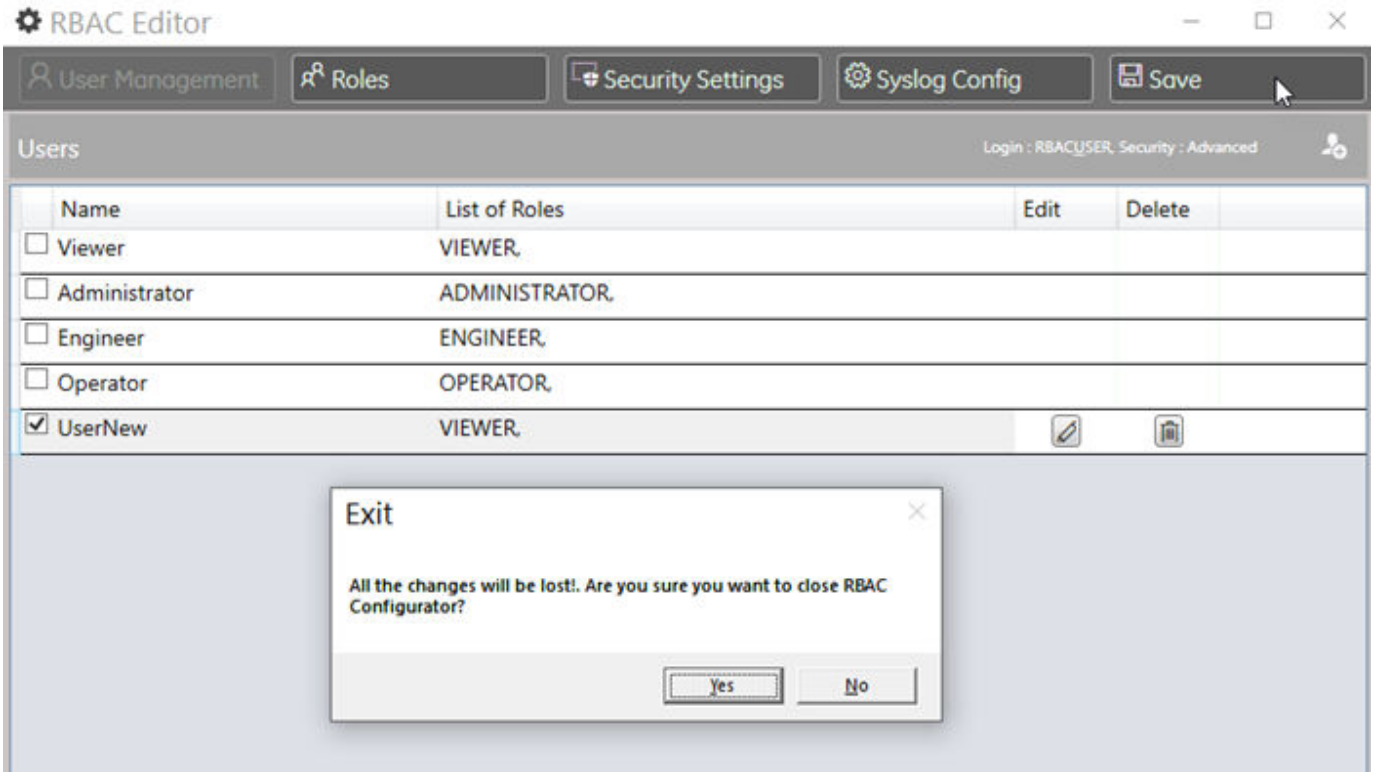

Figure 190: Save changes warning message before closing the RBAC USERMANAGEMENT configurator

19.5.1.3 ROLES CONFIGURATION

The **ROLES** initial screen is similar for Basic and Advanced security. The difference is that for Basic security the 4 fixed available roles can be used (VIEWER, ADMINISTRATOR, ENGINEER and OPERATOR) and they are not editable. For Advanced Cybersecurity 7 roles are pre-configured, the first 6 defined by the standard (VIEWER, OPERATOR, ENGINEER, INSTALLER, SECADM, SECAUD, RBACMNT), and the 7th one (ADMINISTRATOR), predefined with Role ID 7 that can be changed to any of the available private values allowed by the standard (See the IEC 62351 table in the IEC 62351 section).

Basic Security

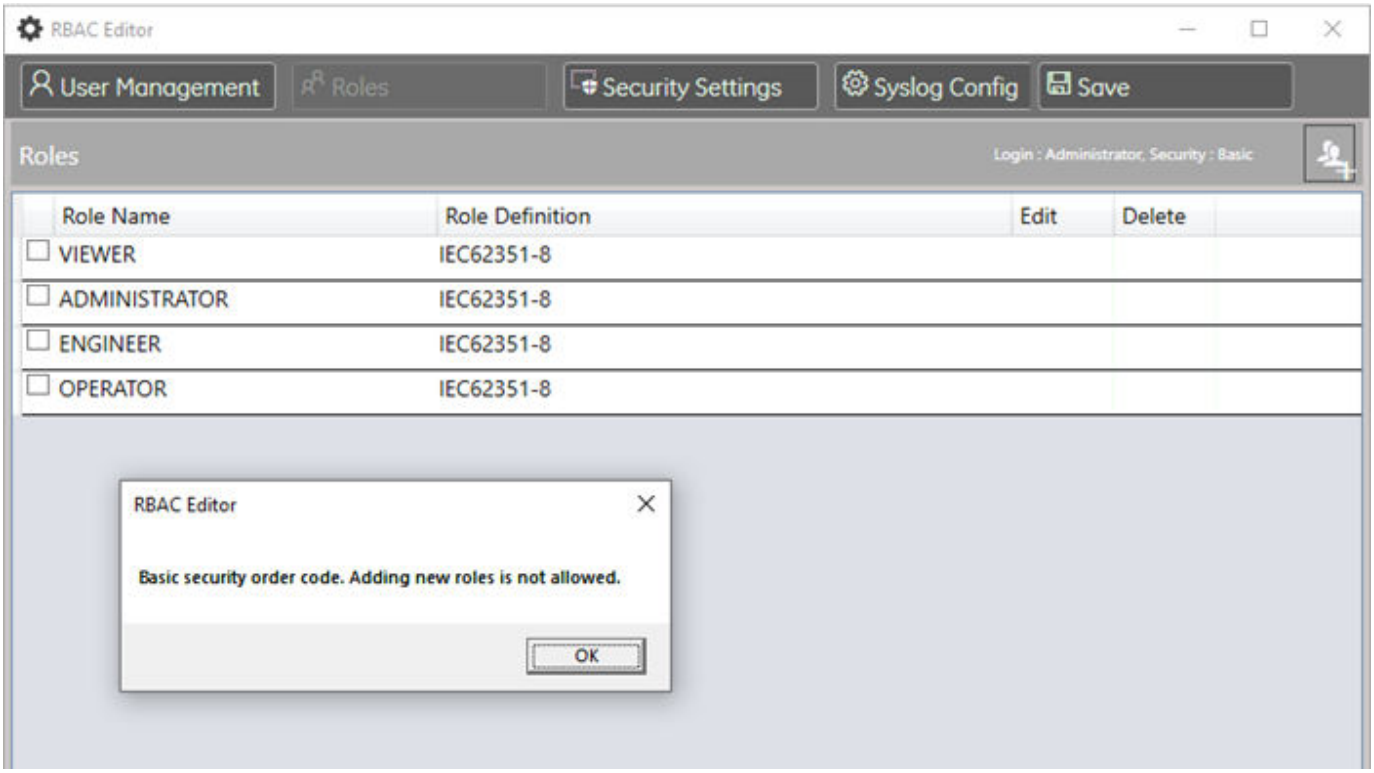

Figure 191: Basic security roles configuration (not configurable)

Advanced Security

The first 6 roles are defined by the standard and all their parameters are fixed. The 7th role, ADMINISTRATOR, is a pre-configured role to provide all of the set permissions together in a single role. The Role Name and Role Definition are not configurable, but the Role ID can be configured. The Role ID provided is set to 7, but it can be configured to -1 or any value from the Private Role ID's available.

To add a new role, click on the right side icon on the **Roles** window:

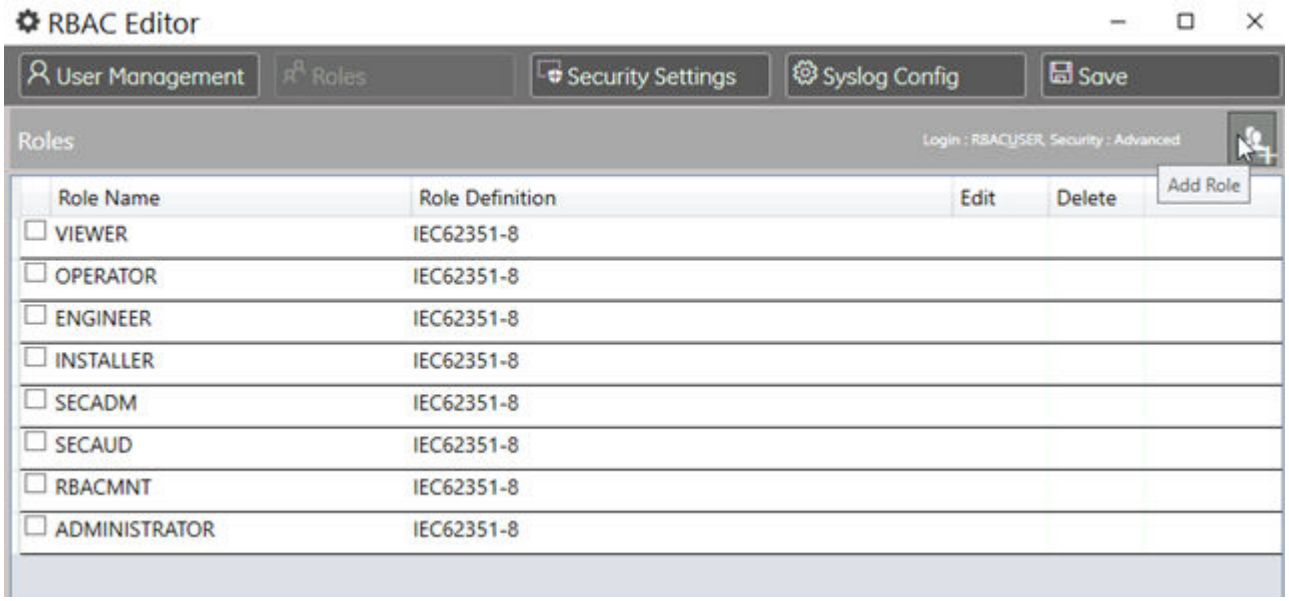

Figure 192: Advanced security roles configuration

A **New Role** window will open with a list of permissions that can be added to any role.

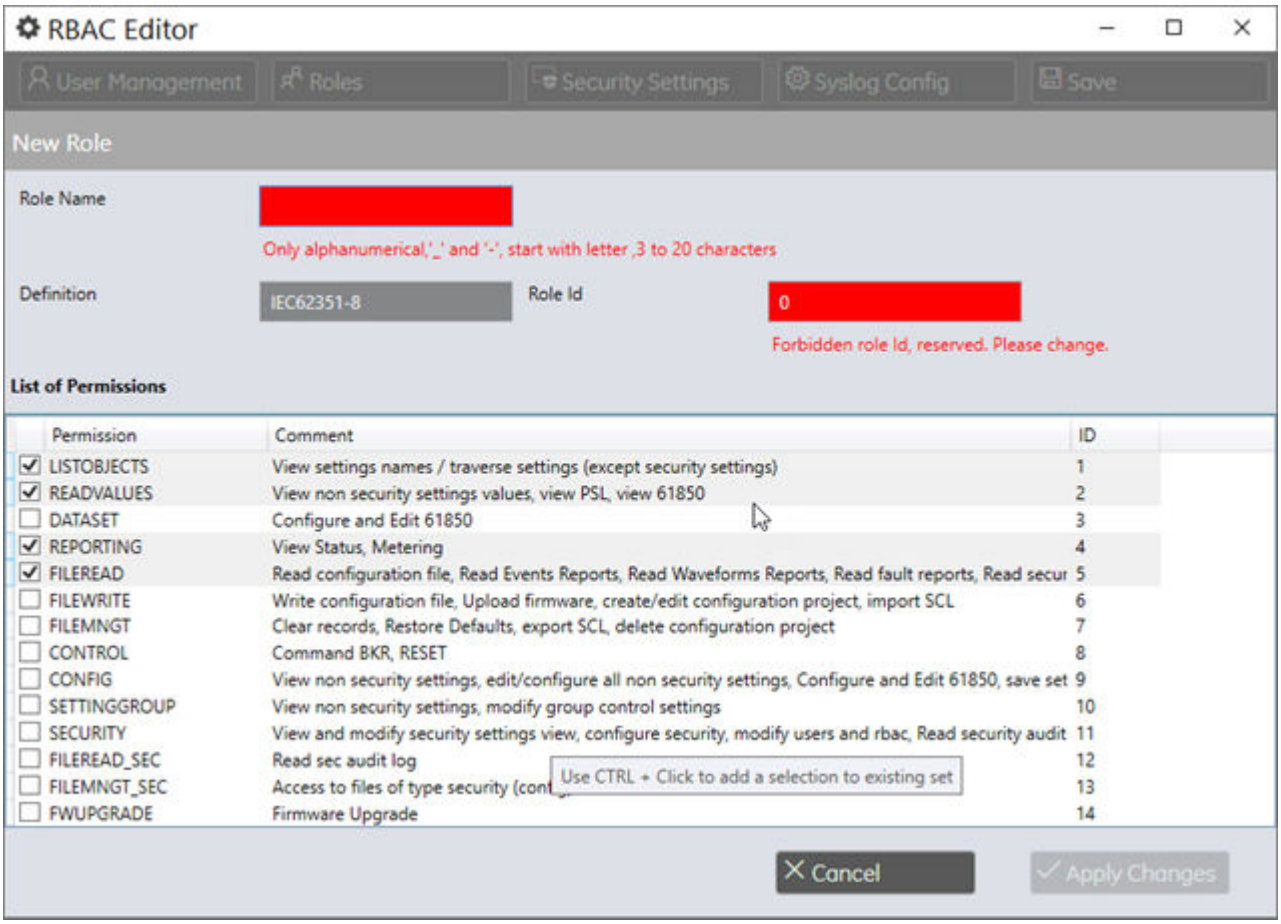

Figure 193: Advanced security new roles configuration

In order to select more than one of the available options, the CTRL+Click combination of keys must be selected. Only the Role Name and Role ID can be changed when a new role is created. The Role Definition is fixed to "IEC 62351-8" for all roles.

Follow the rules for Role Name and Role ID creation and press "Apply Changes". The new user will appear on the Roles' window:

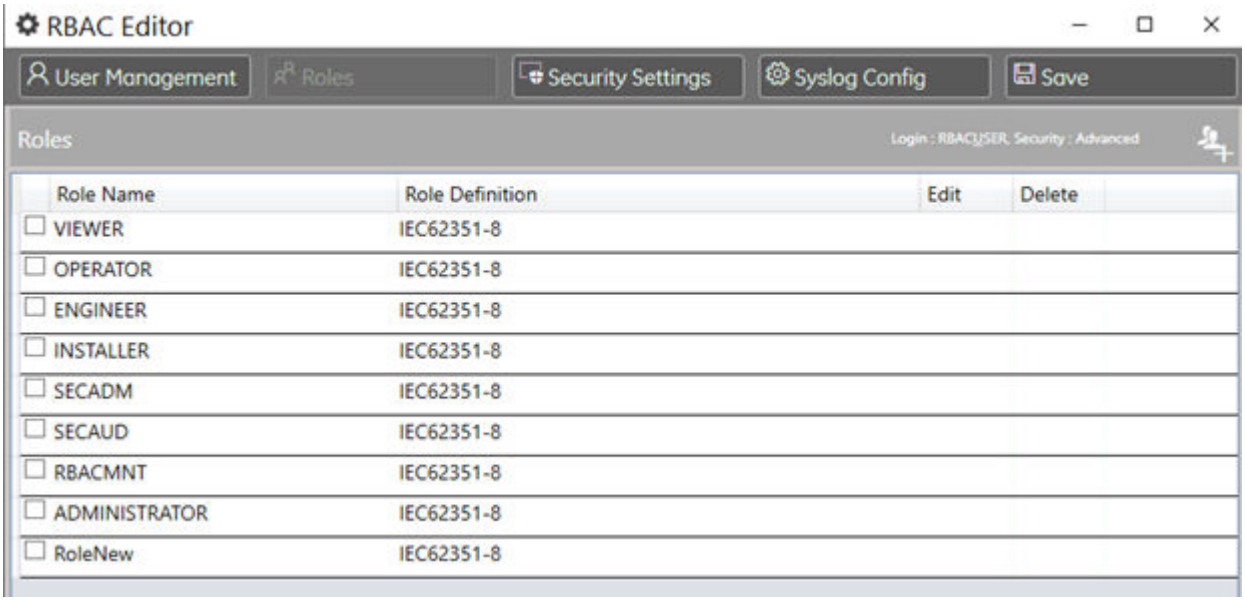

Figure 194: Example of new role creation for advance security

For the configuration to be saved on the device, the **Save** button needs to be clicked, otherwise the configuration will not be saved. A warning message will appear if leaving the RBAC USERMANAGEMENT configurator without saving.

19.5.1.4 SECURITY SETTINGS CONFIGURATION

Basic Security

For Basic Security ***Access Lockout***, ***Acc Lockout Time***, and ***Acc Timeout***, other settings are available.

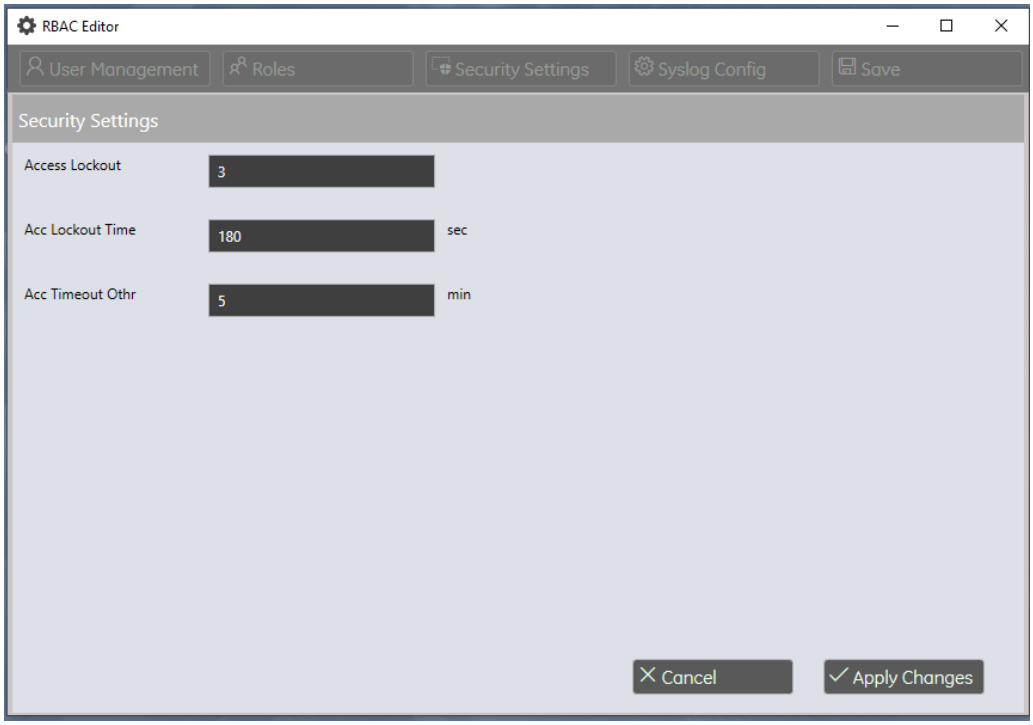

Figure 195: Basic Security Settings

Advanced Security

For Advance Cybersecurity, besides the ***Access Lockout***, ***Acc Lockout Time*** and ***Acc Timeout Othr***, an ***Authentication Method*** setting is provided. Depending on the ***Authentication Method*** setting selection (`LOCAL, RADIUS LEGACY, LDAP_LEGACY`) different setting windows will be displayed.

Advanced Security Settings with Local Authentication Method

If the ***Authen. Method*** is set to `LOCAL`, ***Access Lockout***, ***Acc Lockout Time*** and ***Acc Timeout Othr*** settings are displayed.

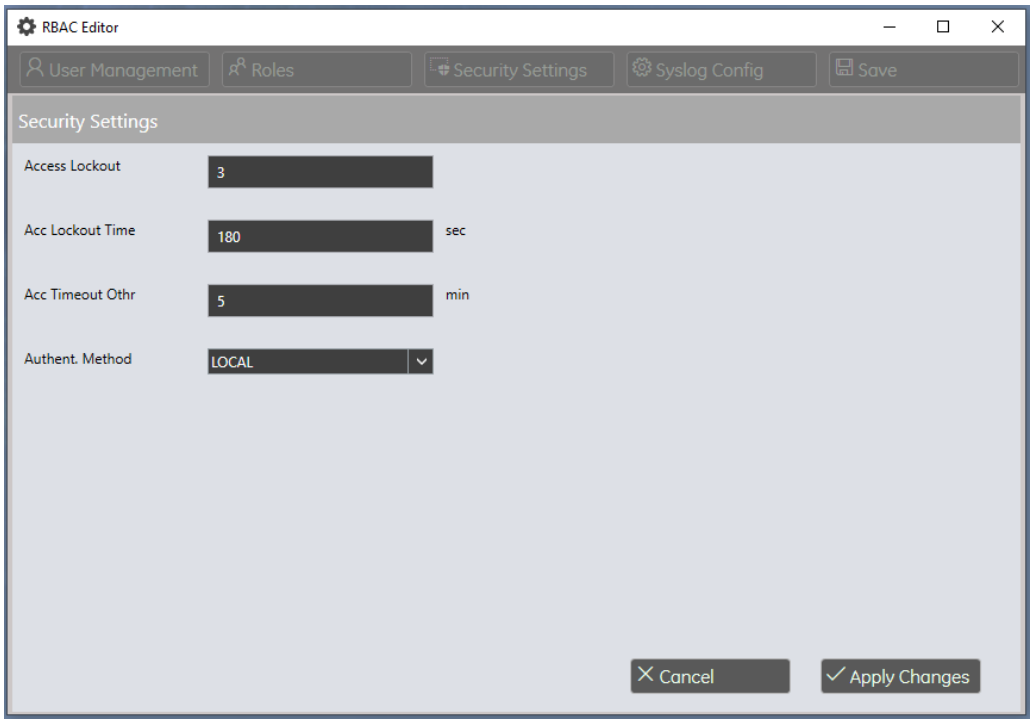

Figure 196: Advanced security settings, authent. method set to local

Advance Security Settings with Radius Legacy Authentication Method

If the ***Authen. Method*** is set to `RADIUS_LEGACY`, the corresponding RADIUS setting will be displayed, number of retries, primary and secondary ports and IP addresses, path to certificate.

The Authentication Methods supported on RADIUS_LEGACY for the 8A release are as follows:

- PEAPv0 with inner authentication method MS-CHAPv2
- EAP-TTLS with inner authentication method PAP (To support RSA AM)
- PAP (unsecured, to support any RADIUS server)

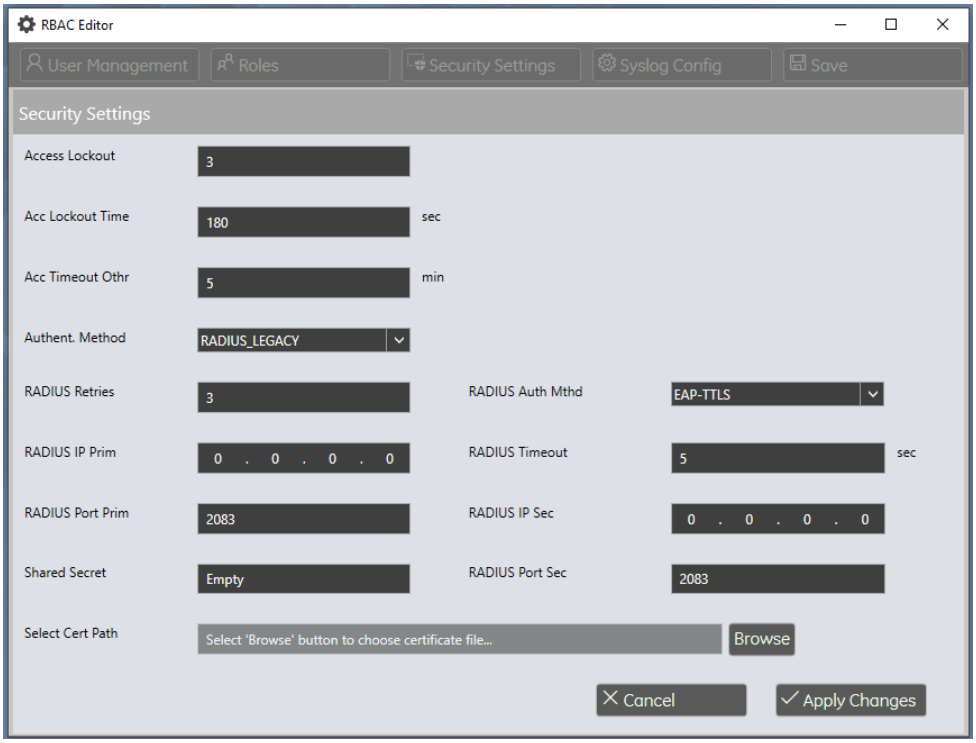

Figure 197: Advance security settings with radius legacy as authentication method

To select the certificate needed to communicate through RADIUS_LEGACY, click on the ***Browse*** button and select the path to a valid certificate. The certificate for RADIUS should have a *.der extension.

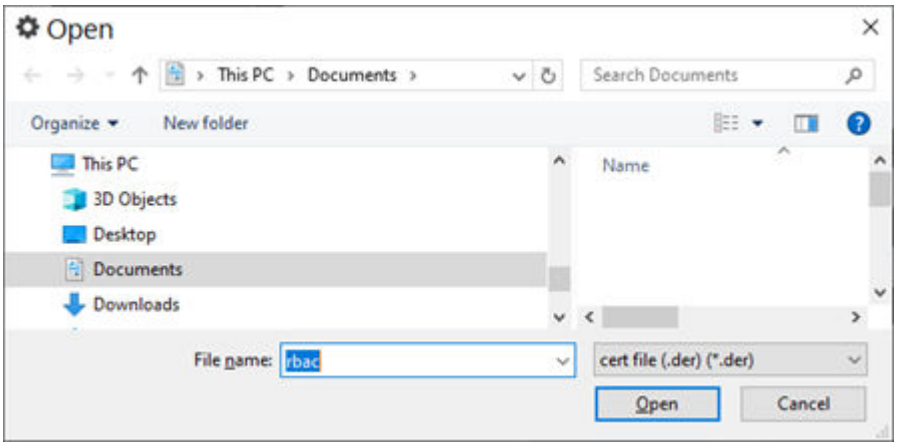

Figure 198: Advance security settings: radius legacy certificate

Advanced Security Settings with LDAP_LEGACY Authentication Method

If the ***Authen. Method*** is set to `LDAP_LEGACY`, the corresponding LDAP setting will be displayed, number of retries, primary and secondary ports and IP addresses, path to certificate, as well as the base DN, users DN, roles DN parameters. See the LDAP section for more details. The Certificate for LDAP should have a *.pem extension.

The LDAP Authentication Methods available are "TCP" and "STARTTLS".

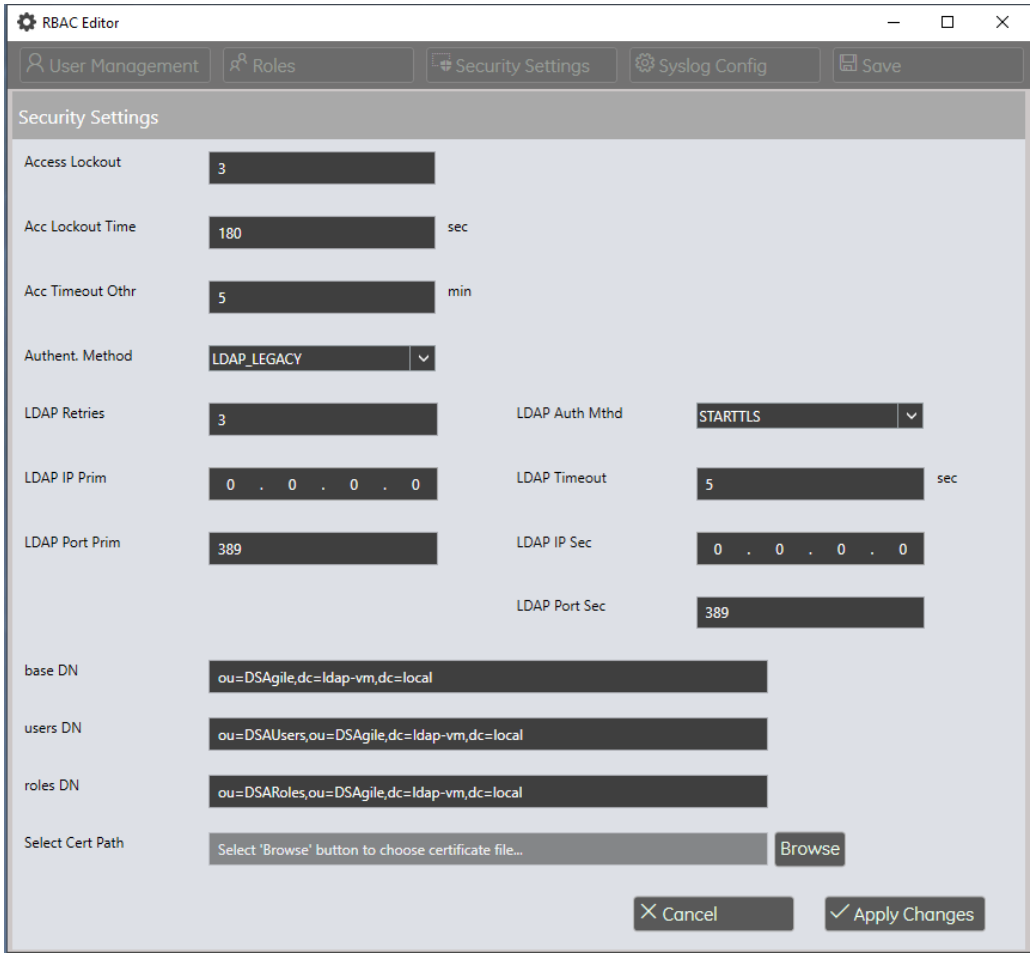

Figure 199: Advanced security settings, authen. method set to LDAP LEGACY

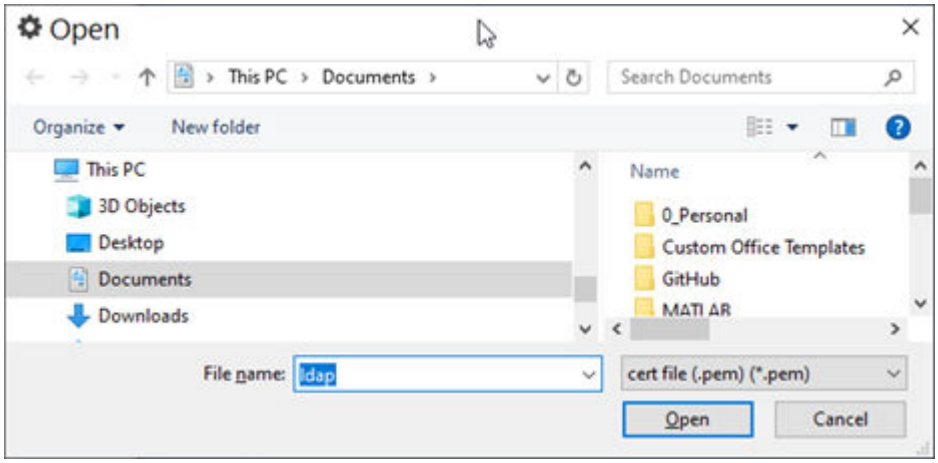

Figure 200: Advance security settings, LDAP LEGACY certificate

19.5.1.5 SYSLOG CONFIGURATION

The IED supports security event reporting through the Syslog protocol, supporting Security Information Event Management (SIEM) systems for centralized cyber security Monitoring over UDP and TCP protocols.

Note:
For Basic security for releases Multilin Agile 8A and 8-Series 4.20 and earlier, Syslog is not available. For releases Multilin Agile 8A and 8-Series 4.20 and later, Syslog is available for both Basic and Advanced Security.

Syslog configuration has the following settings:

- ***Network Protocol***: Available protocols for syslog configuration, to be selected between UDP and TCP
- ***Syslog IP Primary, Syslog IP Secondary***: IP Primary and secondary
- ***Syslog Primary Port, Syslog Secondary Port***: Primary and secondary port for syslog

Note:
0.0.0.0 or 127.0.0.1 values are considered to be empty or unconfigured Ips. A valid IP value should be entered in each of the Syslog IP Primary and Syslog IP Secondary settings.

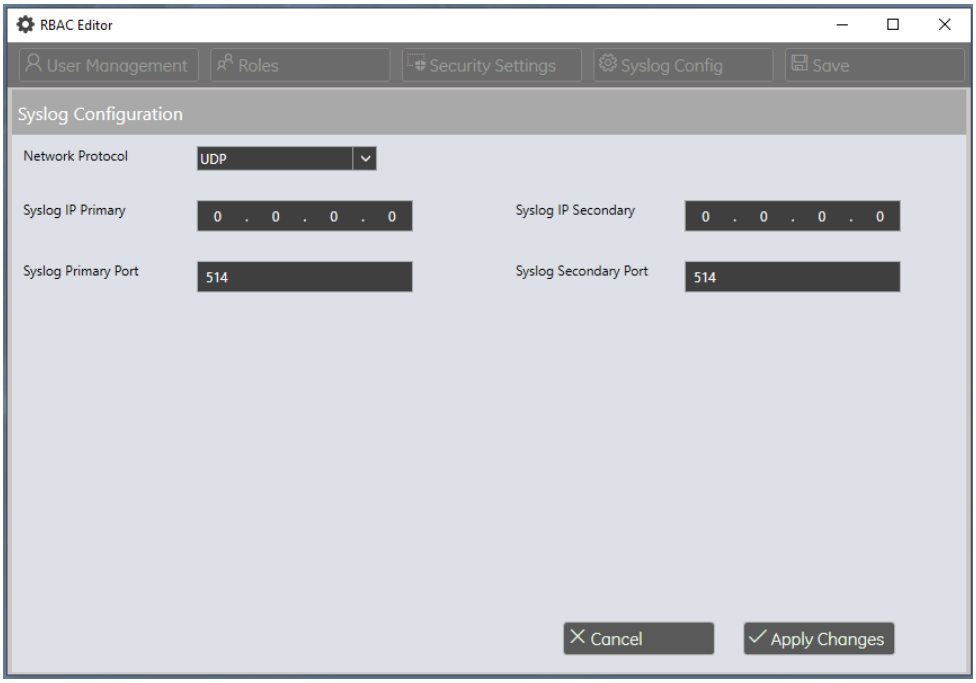

Figure 201: Syslog configuration settings for both basic and advanced security

For any part of the Cybersecurity configuration to be saved on the device, the ***Save*** button needs to be clicked before leaving the **RBAC USERMANAGEMENT** configuration tool, otherwise the changes on the configuration will not be saved. A warning message will appear if the **RBAC USERMANAGEMENT** configurator is left without saving.

CHAPTER 20

INSTALLATION

20.1 CHAPTER OVERVIEW

This section describes the mechanical installation of the system, including dimensions for mounting and information on module withdrawal and insertion.

This chapter contains the following sections:

Chapter Overview 478

Product Identification 479

Handling the Goods 480

Mounting the Device 481

Cables and Connectors 489

Case Dimensions and Panel Cutout 496

20.2 PRODUCT IDENTIFICATION

The product identification label is located on the side panel of the IED. This label indicates the product model, serial number, and date of manufacture. However, when the IED is installed the label may not be visible. In this case, the product my be identified using the model number printed on the front panel and the Cortec provided in the Ordering Options Appendix.

20.3 HANDLING THE GOODS

Our products are of robust construction but require careful treatment before installation on site. This section discusses the requirements for receiving and unpacking the goods, as well as associated considerations regarding product care and personal safety.

Caution:
Before lifting or moving the equipment you should be familiar with the Safety Information chapter of this manual.

20.3.1 RECEIPT OF THE GOODS

On receipt, ensure the correct product has been delivered. Unpack the product immediately to ensure there has been no external damage in transit. If the product has been damaged, make a claim to the transport contractor and notify us promptly.

For products not intended for immediate installation, repack them in their original delivery packaging.

20.3.2 UNPACKING THE GOODS

When unpacking and installing the product, take care not to damage any of the parts and make sure that additional components are not accidentally left in the packing or lost. Do not discard any CDROMs or technical documentation (where included). These should accompany the unit to its destination substation and put in a dedicated place.

The site should be well lit to aid inspection, clean, dry and reasonably free from dust and excessive vibration. This particularly applies where installation is being carried out at the same time as construction work.

20.3.3 STORING THE GOODS

If the unit is not installed immediately, store it in a place free from dust and moisture in its original packaging. Keep any de-humidifier bags included in the packing. The de-humidifier crystals lose their efficiency if the bag is exposed to ambient conditions. Restore the crystals before replacing it in the carton. Ideally regeneration should be carried out in a ventilating, circulating oven at about 115°C. Bags should be placed on flat racks and spaced to allow circulation around them. The time taken for regeneration will depend on the size of the bag. If a ventilating, circulating oven is not available, when using an ordinary oven, open the door on a regular basis to let out the steam given off by the regenerating silica gel.

On subsequent unpacking, make sure that any dust on the carton does not fall inside. Avoid storing in locations of high humidity. In locations of high humidity the packaging may become impregnated with moisture and the de-humidifier crystals will lose their efficiency.

The device can be stored between –40º to +85ºC for unlimited periods (see technical specifications).

To avoid deterioration of electrolytic capacitors, power up units that are stored in a deenergised state once per year, for one hour continuously.

20.3.4 DISMANTLING THE GOODS

If you need to dismantle the device, always observe standard ESD (Electrostatic Discharge) precautions. The minimum precautions to be followed are as follows:

- Use an antistatic wrist band earthed to a suitable earthing point.
- Avoid touching the electronic components and PCBs.

20.4 MOUNTING THE DEVICE

The products are available in the following forms

- For flush panel and rack mounting
- Software only (for upgrades)

20.4.1 FLUSH PANEL MOUNTING

Caution:
To avoid the potential for personal injury due to fire hazards, ensure the unit is mounted in a safe location and/or within an appropriate enclosure.

Panel-mounted devices are flush mounted into panels using M4 SEMS Taptite self-tapping screws with captive 3 mm thick washers (also known as a SEMS unit).

Caution:
Do not use conventional self-tapping screws, because they have larger heads and could damage the faceplate.

Alternatively, you can use tapped holes if the panel has a minimum thickness of 2.5 mm.

For applications where the product needs to be semi-projection or projection mounted, a range of collars are available.

If several products are mounted in a single cut-out in the panel, mechanically group them horizontally or vertically into rigid assemblies before mounting in the panel.

Caution:
Do not fasten products with pop rivets because this makes them difficult to remove if repair becomes necessary.

20.4.1.1 RACK MOUNTING

Panel-mounted variants can also be rack mounted using single-tier rack frames (our part number FX0021 001), as shown in the figure below. These frames are designed with dimensions in accordance with IEC 60297 and are supplied pre-assembled ready to use. On a standard 483 mm (19 inch) rack this enables combinations of case widths up to a total equivalent of size 80TE to be mounted side by side.

The two horizontal rails of the rack frame have holes drilled at approximately 26 mm intervals. Attach the products by their mounting flanges using M4 Taptite self-tapping screws with captive 3 mm thick washers (also known as a SEMS unit).

Caution:
Risk of damage to the front cover molding. Do not use conventional self-tapping screws, including those supplied for mounting products because they have slightly larger heads.

Once the tier is complete, the frames are fastened into the racks using mounting angles at each end of the tier.

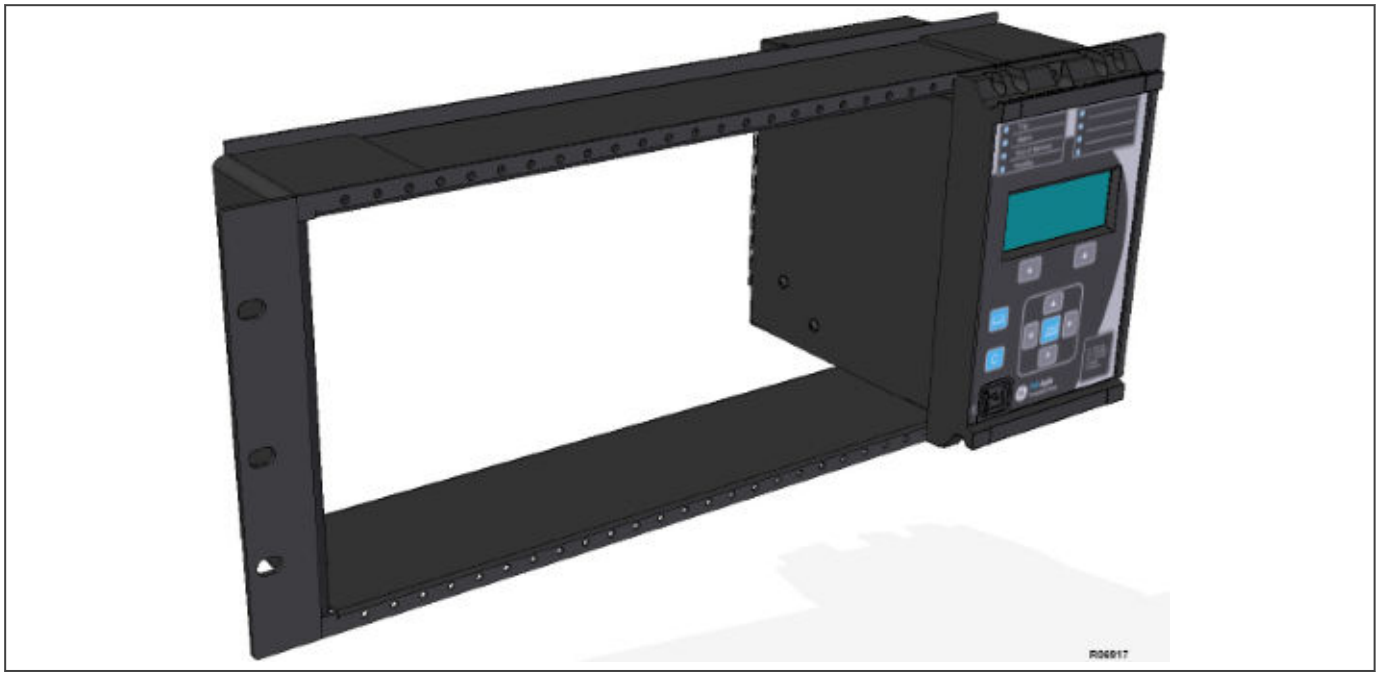

Figure 202: Rack mounting of products

Products can be mechanically grouped into single tier (4U) or multi-tier arrangements using the rack frame. This enables schemes using products from different product ranges to be pre-wired together before mounting.

Use blanking plates to fill any empty spaces. The spaces may be used for installing future products or because the total size is less than 80TE on any tier. Blanking plates can also be used to mount ancillary components. The part numbers are as follows:

Case Size Summation	Blanking Plate Part Number
5TE	GJ2028 001
10TE	GJ2028 002
15TE	GJ2028 003
20TE	GJ2028 004
25TE	GJ2028 005
30TE	GJ2028 006
35TE	GJ2028 007
40TE	GJ2028 008

20.4.1.2 DRAW-OUT UNIT WITHDRAWAL AND INSERTION

Unit withdrawal and insertion may only be performed when control power has been removed from the unit.

Warning:
Turn off control power before drawing out or re-inserting the IED to prevent maloperation.

20.4.1.2.1 20TE (AND 30TE WITHOUT CAM) DRAW-OUT UNIT WITHDRAWAL AND INSERTION

Required tools:

- T10 Torx or PZ1 Posidrive screwdriver, depending on the relay model

Note:
30TE without cam IED images are provided to illustrate the extraction/insertion of the unit. All steps listed below, for 30TE without cam, also apply to 20TE.

Follow the steps outlined below to **withdraw** the draw-out unit:

1. Remove (with the appropriate screwdriver), the 4 front panel screws that fix the front panel to the chassis, and keep the screws safe.

Figure 203: 30TE (without cam) screws placement

2. Grab the module by both hands, in the top and the bottom. End the module extraction process by pulling manually.

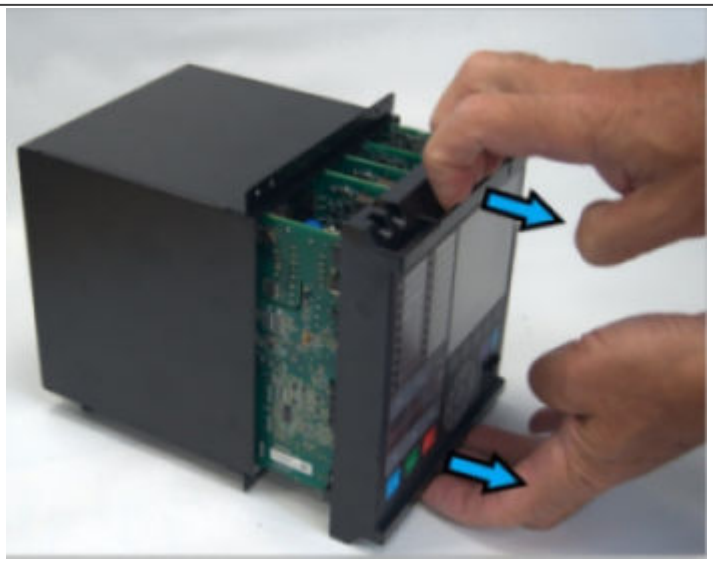

Figure 204: 30TE module extraction

Follow the steps outlined below, to insert the draw-out unit.

3. Place the module centered in the device's chassis, and guide it by pushing manually on the top and bottom frames of the front panel (*). Push firmly until the module is totally inserted.

Warning:
Pushing from the display or keypad zones could cause the device to be damaged.

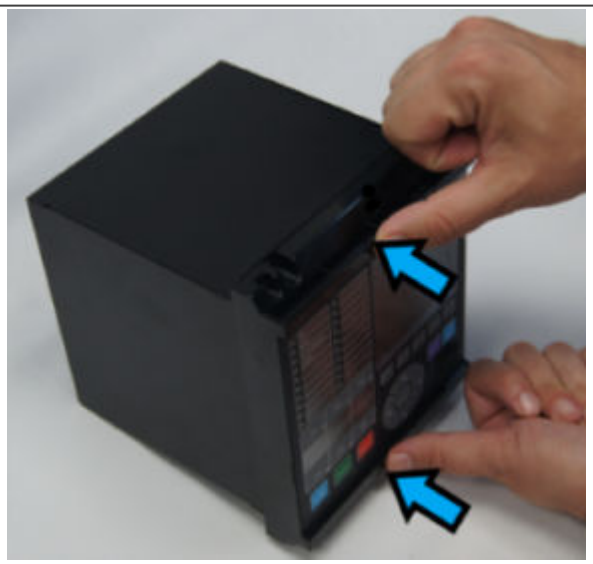

Figure 205: 30TE insertion

4. Assemble and screw (with the appropriate screwdriver), the 4 screws that fix the front panel to the chassis, applying no more than 0.8Nm torque.

Warning:
Applying more than maximum 0.8Nm torque when re-assembling the unit could cause the device to be damaged.

20.4.1.2.2 30TE (WITH CAM) DRAW-OUT UNIT WITHDRAWAL AND INSERTION

Required tools:

- T10 Torx or PZ1 Posidrive screwdriver, depending on the relay model
- Two 4.5mm max diameter rods (about 10cm long) or screwdrivers to be used as levers for the cam rotation

Warning:
IED 30TE withdrawal and insertion can be done using just one lever, and pulling manually with the other hand, but using 2 levers is strongly recommended.

Follow the steps outlined below to **withdraw** the draw-out unit:

1. Remove (with the appropriate screwdriver), the 4 front panel screws that fix the front panel to the chassis, and keep the screws safe.

Figure 206: 30TE (with cam) screws and cams placement

2. Insert the levers into each of the 2 cam holes (one in the top part of the frame, and the other in the bottom). The total cam holes' depth is around 10mm.

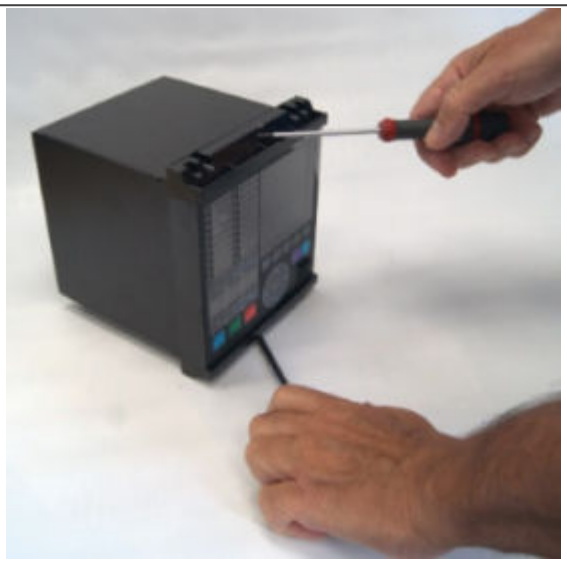

Figure 207: 30TE levers insertion

3. Rotate the cams horizontally but slowly, while firmly pulling from the levers. The total cam rotation shall be about 90 degrees and the module will be pulled out approximately 6mm.

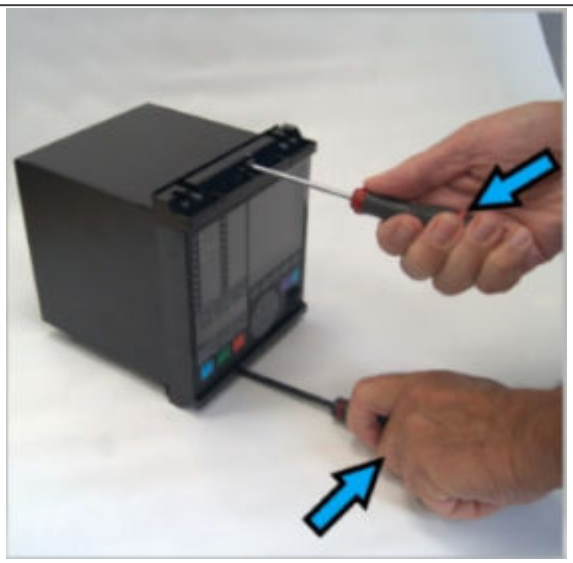

Figure 208: 30TE 2 levers rotation direction

4. Remove the levers.

5. Grab the module with both hands, in the top and the bottom. End the module extraction process by pulling manually.

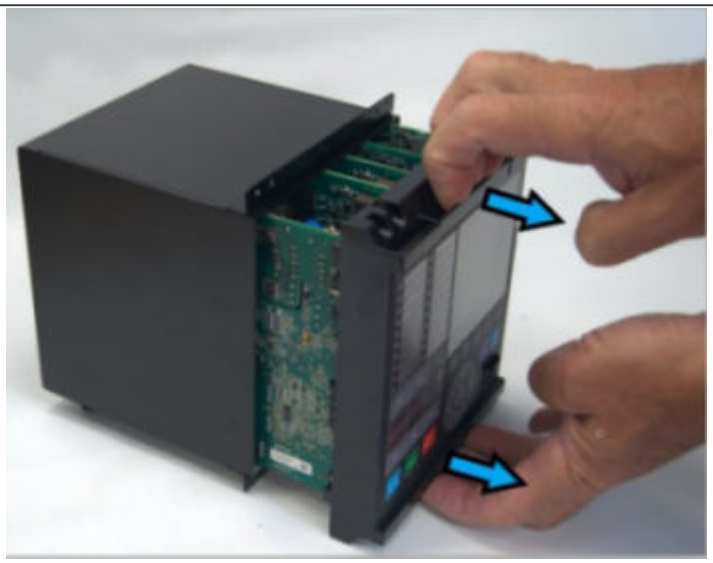

Figure 209: 30TE module extraction

Warning:
IED 30TE withdrawal and insertion can be done using just one lever, and pulling manually with the other hand, but using 2 levers is strongly recommended.

If only one lever is to be used, insert it into the top cam, and pull manually from the bottom, with the other hand's fingers, while rotating the top cam through the lever.

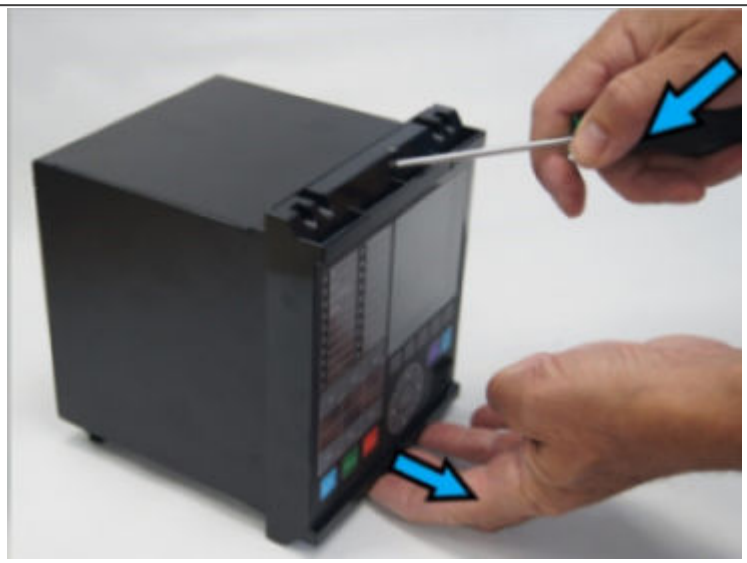

Figure 210: 30TE 1 lever rotation, direction and extraction

Follow the steps outlined below to **insert** the draw-out unit:

1. Before inserting the module, the cams must be manually placed in the folded position. For this, using your fingers, push the cams from the rear until they are folded.

2. Place the module centered in the device's chassis, and guide it by pushing manually on the top and bottom frames of the front panel (*). Push firmly until the module is totally inserted.

Warning:
(*) Pushing from the display or keypad zones could cause the device to be damaged.

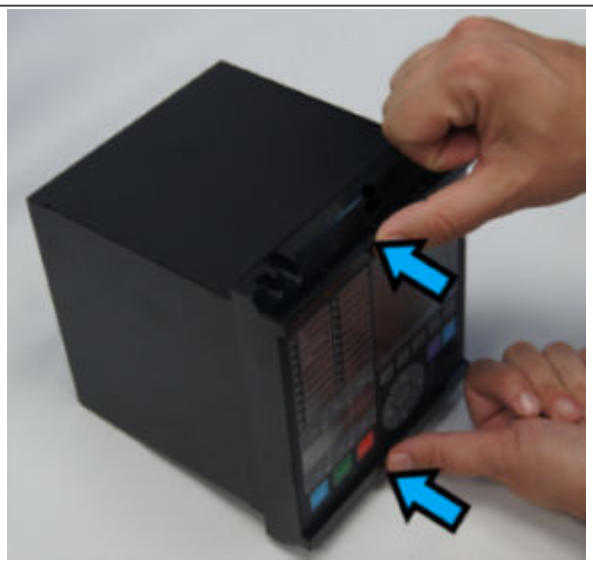

Figure 211: 30TE insertion

3. Assemble and screw (with the appropriate screwdriver), the 4 screws that fix the front panel to the chassis, applying no more than 0.8Nm torque.

Warning:
Applying more than maximum 0.8Nm torque when re-assembling the unit could cause the device to be damaged.

20.4.2 SOFTWARE ONLY

It is possible to upgrade an existing device with advanced software functions by purchasing software only (providing the device is already fitted with the requisite hardware).

There are two options for software-only products:

- Your device is sent back to the GE Vernova factory for upgrade.
- The software is downloaded or sent to you for upgrade. Please contact your local representative if you wish to procure the services of a commissioning engineer to help you with your device upgrade.

Note:
Software-only products are licensed for use with devices with specific serial numbers.

Caution:
Do not attempt to upgrade an existing device if the software has not been licensed for that specific device.

20.5 CABLES AND CONNECTORS

This section describes the type of wiring and connections that should be used when installing the device. For pin-out details please refer to the Hardware Design chapter or the wiring diagrams.

A broad range of applications are available for the IEDs. As such, it is not possible to present typical connections for all possible schemes. The information in this section covers the important aspects of interconnections, in the general areas of instrument transformer inputs, other inputs, outputs, communications and grounding.

Caution:
Before carrying out any work on the equipment you should be familiar with the Safety Section and the ratings on the equipment's rating label.

Copper wiring is suggested with a minimum temperature rating of 75ºC.

20.5.1 LUG ORIENTATION

When installing two lugs on one terminal, both lugs should be installed as per lug manufacturer instructions and engineering best practise.

20.5.2 TERMINAL BLOCKS

The device uses terminal blocks as shown below.

The device uses terminal blocks, each consisting of up to 16 x M3.5 screw terminals. The wires can be terminated with rings using ring terminals, with no more than two rings per terminal. If two rings are used, remove the teeth of the IP20 cover, as shown.

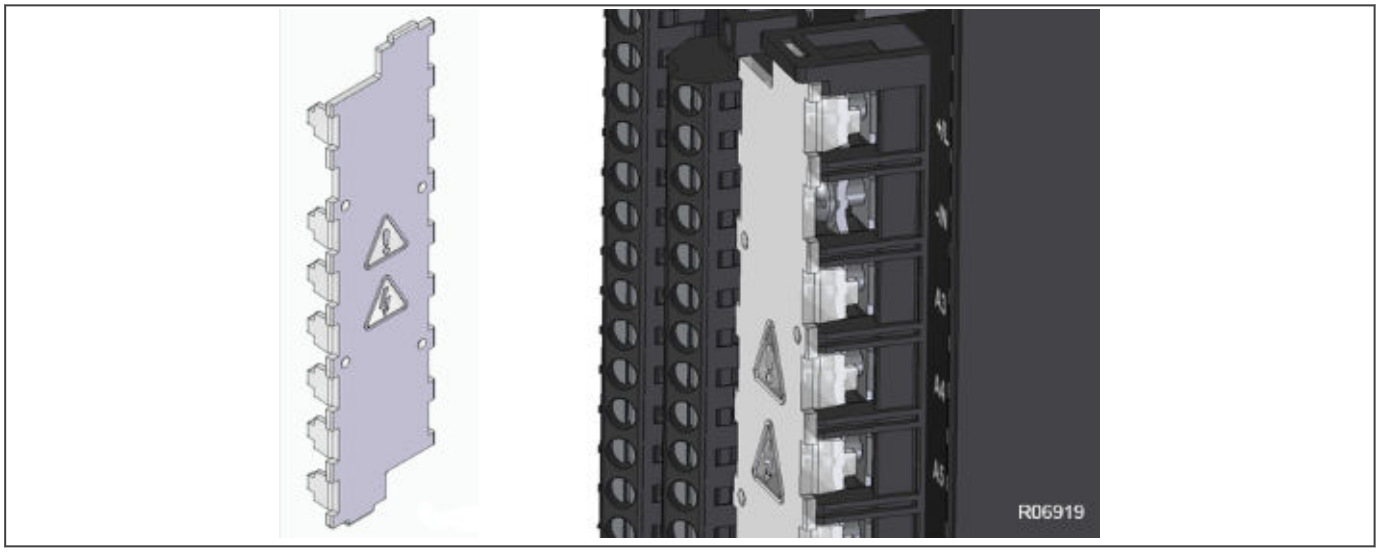

Figure 212: IP20 cover with teeth removed, alone and installed

The terminal block is supplied with a 3-pole jumper to create a star configuration with the current transformers when one is needed (instead of wiring one externally), as shown.

Figure 213: Terminal block with 3-pole jumper for 20TE

Figure 214: Terminal block with 3-pole jumper for 30TE (PIN terminals)

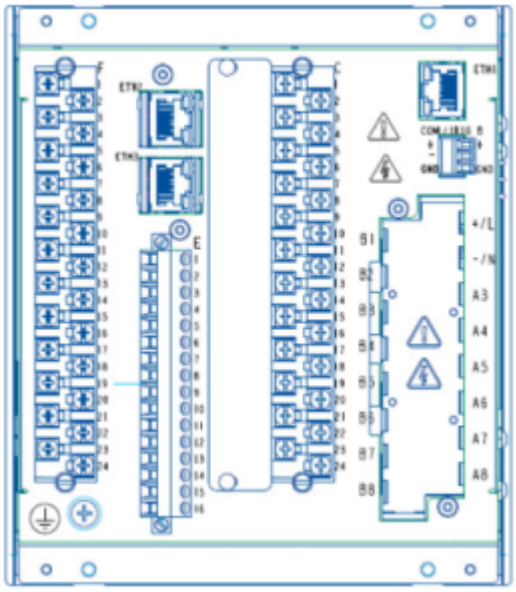

Figure 215: Terminal block with 3-pole jumper for 30TE (Hybrid PIN + RING terminals)

20.5.3 POWER SUPPLY CONNECTIONS

These should be wired with 1.5 mm PVC insulated multi-stranded copper wire terminated with M3.5 8 mm maximum diameter ring terminals. Recommended ring terminals: TE B-106-1403 or Molex 193240012

The wire should have a minimum voltage rating of 300 V RMS.

Caution:
Control power supplied to the IED must match the installed power supply range. If the applied voltage does not match, damage to the unit may occur. All earths MUST be connected for normal operation regardless of control power supply type.

Caution:
Protect the auxiliary power supply wiring with a maximum 10 A high rupture capacity (HRC) type NIT or TIA fuse.

20.5.4 EARTH CONNNECTION

Every device must be connected to the earth connection using the earth terminal.

Use the shortest practical path. A tinned copper, braided, shielding and bonding cable should be used. As a minimum, 96 strands of number 34 AWG should be used.

The wire should have a minimum voltage rating of 300 V RMS.

Note:
To prevent any possibility of electrolytic action between brass or copper ground conductors and the rear panel of the product, precautions should be taken to isolate them from one another. This could be achieved in several ways, including placing a nickel-plated or insulating washer between the conductor and the product case, or using tinned ring terminals.

20.5.5 PHASE SEQUENCE AND TRANSFORMER POLARITY

For correct operation of the IEDs features, follow the instrument transformer polarities, shown in the Typical Wiring Diagram. Note the solid square markings that are shown with all instrument transformer connections. When the connections adhere to the drawing, the arrow shows the direction of power flow for positive watts and the positive direction of vars. The phase sequence is user programmable for either ABC or ACB rotation.

The Multilin Agile IED has four (4) current inputs. Three of them are used for connecting to the phase CT phases A, B, and C. The fourth input is an earth input that can be connected to either a earth CT placed on the neutral from a Wye connected transformer winding, or to a “donut” type CT measuring the zero sequence current from a earthed system. The IED CTs are placed in a packet mounted to the chassis of the IED. There are no internal earth connections on the current inputs.

Caution:
Verify that the IEDs CT Ratio Settings under *SETPOINTS\SYSTEM\CT RATIO* are correctly set matching the Primary and Secondary rating of the connected CTs. Unmatched CTs may result in equipment damage or inadequate protection.

20.5.6 CURRENT TRANSFORMERS

Current transformers would generally be wired with 2.5 mm^2 PVC insulated multi-stranded copper wire terminated with M3.5 8 mm maximum diameter ring terminals. Recommended ring terminals: TE B-106-1403 or Molex 193240012.

Due to physical limitations, the maximum wire size you can use is 4.0 mm^2 using ring terminals. If you need a greater cross-sectional area, use two wires in parallel, each terminated in a separate ring terminal.

The wire should have a minimum voltage rating of 300 V RMS.

Caution:
Current transformer circuits must never be fused.

Note:
If there are CTs present, ensure that the terminals into which the CTs connect are shorted before the CT module is removed.

Note:
For 5A CT secondaries, we recommend using 2 x 2.5 mm^2 PVC insulated multi-stranded copper wire.

Note:
The terminal block is supplied with a 3-pole jumper to create a star configuration with the current transformers when one is needed (instead of wiring one externally).

20.5.7 VOLTAGE TRANSFORMER CONNECTIONS

Voltage transformers would generally be wired with 2.5 mm^2 PVC insulated multi-stranded copper wire terminated with M3.5 8 mm maximum diameter ring terminals. Recommended ring terminals: TE B-106-1403 or Molex 193240012.

The wire should have a minimum voltage rating of 300 V RMS.

20.5.8 WATCHDOG (CRITICAL FAIL) CONNECTIONS

These should be wired with at least 1mm PVC multi stranded copper wire with/without pin terminals up to 2.5mm.

The wire should have a minimum voltage rating of 300 V RMS.

The watchdog for Multilin Agile IEDs is a reserved Critical Fail normally closed non-programmable contact for relay healthy/relay fail indication. Its status can be checked under ***DEVICE STATUS\RELAY OUTPUTS\RELAY OUTPUTS*** path. Watchdog terminals are showed as 'Critical Fail' in the corresponding IEDs wiring diagram.

20.5.9 EIA(RS)485 CONNECTIONS

For connecting the EIA(RS485) ports, use 2-core screened cable with a maximum total length of 1000 m or 200 nF total cable capacitance.

A typical cable specification would be:

- Each core: 16/0.2 mm^2 copper conductors, PVC insulated
- Nominal conductor area: 0.5 mm^2 per core
- Screen: Overall braid, PVC sheathed

Up to 32 P14 Series IEDs can be daisy-chained together on a communication channel without exceeding the driver capability. For larger systems, additional serial channels must be added. Commercially available repeaters can also be used to add more than 32 relays on a single channel.

Caution:
To ensure that all devices in a daisy-chain are at the same potential, it is imperative that the common terminals of each RS485 port are tied together and grounded only once, at the master or at the IED. Failure to do so may result in intermittent or failed communications.

The last device at each end of the daisy-chain should be terminated with a 120 ohm ¼ watt resistor in series with a 1 nF capacitor across the positive and negative terminals. Some systems allow the shield (drain wire) to be used as a common wire and to connect directly to the COM terminal; others function correctly only if the common wire is connected to the COM terminal, but insulated from the shield.

Observing these guidelines ensure a reliable communication system immune to system transients.

To guarantee the performance specifications, you must ensure continuity of the screen, when daisy chaining the connections.There is no electrical connection of the cable screen to the device. The link is provided purely to link together the two cable screens.

20.5.10 IRIG-B CONNECTION

IRIG-B is a standard time code format that allows time stamping of events to be synchronized among connected devices within 1 millisecond. The IRIG-B time code formats are serial, width-modulated codes DC level shift form. Third party equipment is available for generating the IRIG-B signal; this equipment may use a GPS satellite system to obtain the time reference so that devices at different geographic locations can also be synchronized.

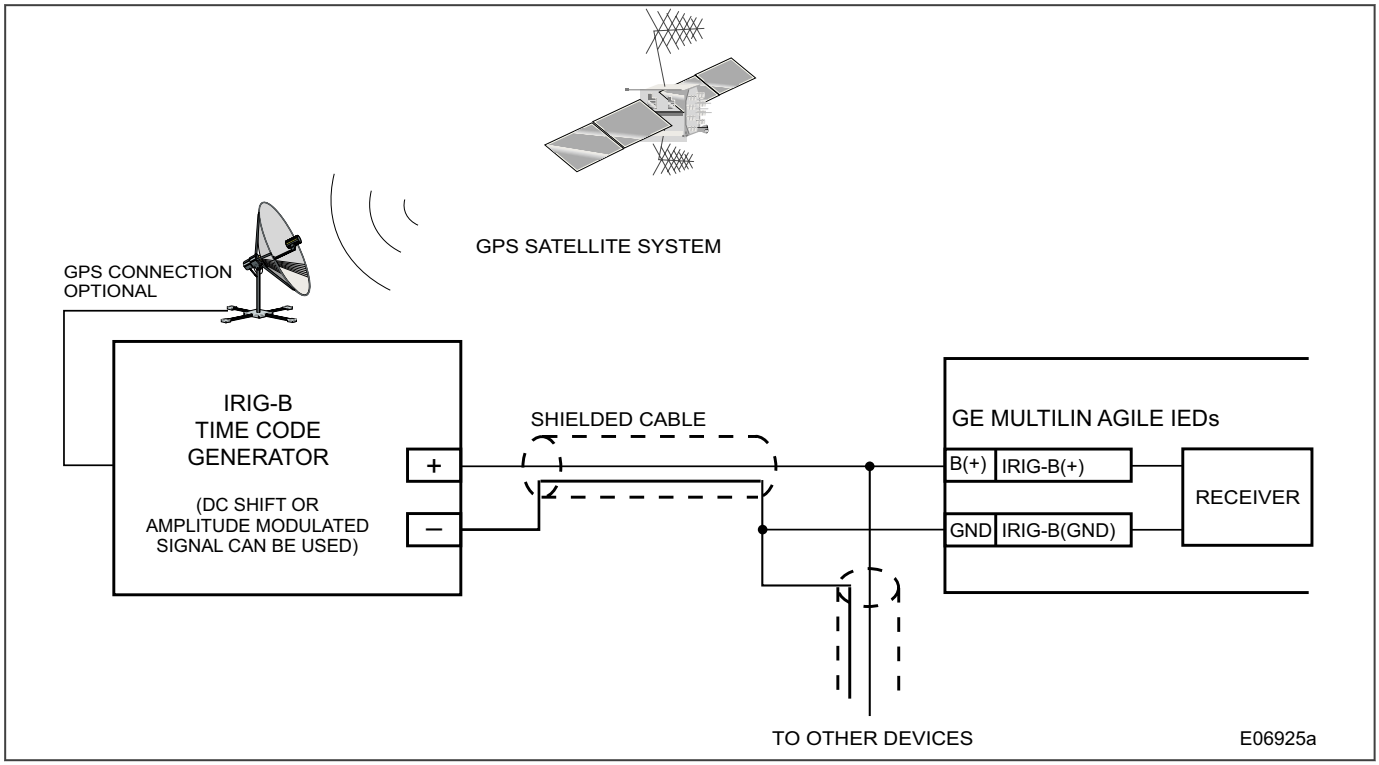

The optional IRIG-B input uses the same terminals as the EIA(RS)485 port COM1. It is therefore apparent that RS485 communications and IRIG-B input are mutually exclusive.

A typical cable specification would be:

- Each core: 16/0.2 mm^2 copper conductors, PVC insulated
- Nominal conductor area: 0.5 mm^2 per core
- Screen: Overall braid, PVC sheathed

IRIG-B connection (two wires) to Multilin Agile IED COM1 terminals:

- IRIG-B positive wire should be connected to COM1 B(+) terminal
- IRIG-B neutral wire should be connected to COM1 GND terminal
- COM1 A(-) terminal should remain not connected.

The uncovered communications cable shield connected to the common terminal should not exceed 1” (2.5 cm) for proper EMC shielding of the communications cable.

Note:
To use the IRIG-B connection, the IRIG-B setting under ***SETPOINT\DATE AND TIME\CLOCK\RIG-B*** *should be set to* `Enabled`.

Note:
The IRIG-B connection is a two cable connection so the COM1 A(-) terminal should not be connected

20.5.11 OPTO-INPUT CONNECTIONS

Depending on the order code, the Multilin Agile IED has a different number of contact inputs which can be used to operate a variety of logic functions for circuit switching device control, external trips, blocking of protection elements,

etc. The IED has ‘contact inputs’ and ‘virtual inputs’ that are combined in a form of programmable logic to facilitate the implementation of various schemes.

These should be wired with at least 1mm PVC multi stranded copper wire with/wihout pin terminals up to 2.5mm.

Each opto-input has a ***Debounce Time*** setting. This makes the input immune to noise induced on the wiring. This can, however slow down the response.

Caution:
Protect the opto-inputs and their wiring with a maximum 2A high rupture capacity (HRC) type NIT or TIA fuse.

20.5.12 OUTPUT IED CONNECTIONS

These should be wired with at least 1mm PVC multi stranded copper wire with/wihout pin terminals up to 2.5mm.

20.5.13 ETHERNET COPPER CONNECTIONS

If the device has a copper Ethernet connection, it can be connected to either a 10Base-T or a 100Base-TX Ethernet hub. Due to noise sensitivity, we recommend this type of connection only for short distance connections, ideally where the products and hubs are in the same cubicle.

The connector for the Ethernet port is a shielded RJ-45. The pin-out is as follows:

Pin	Signal Name	Signal Definition
1	TXP	Transmit (positive)
2	TXN	Transmit (negative)
3	RXP	Receive (positive)
4	-	Not used
5	-	Not used
6	RXN	Receive (negative)
7	-	Not used
8	-	Not used

Note:
For increased noise immunity, it is recommended to use CAT 6 (category 6) STP (shielded twisted pair) cable and connectors.

20.5.14 ETHERNET FIBRE CONNECTIONS

We recommend the use of fibre-optic connections for permanent connections in a substation environment. The 100 Mbps fibre optic port is based on the 100BaseFX standard and uses type LC connectors. They are compatible with 50/125 µm or 62.5/125 µm multimode fibres at 1300 nm wavelength.

20.5.15 USB CONNECTION

The IED has a type B USB socket on the front panel. A standard USB printer cable (type A one end, type B the other end) can be used to connect a local PC to the IED. This cable is the same as that used for connecting a printer to a PC.

20.6 CASE DIMENSIONS AND PANEL CUTOUT

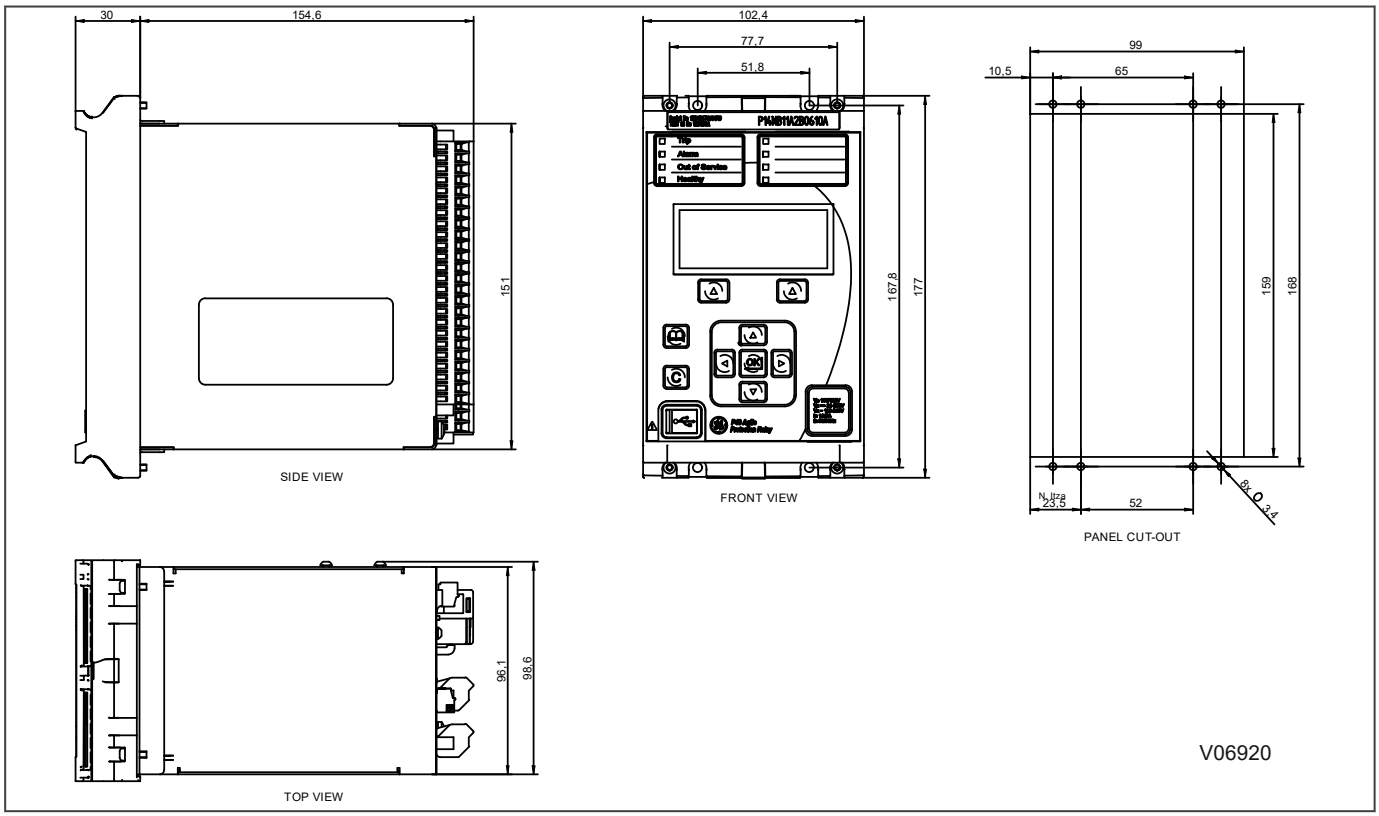

Figure 216: 20TE case dimensions and panel cutout

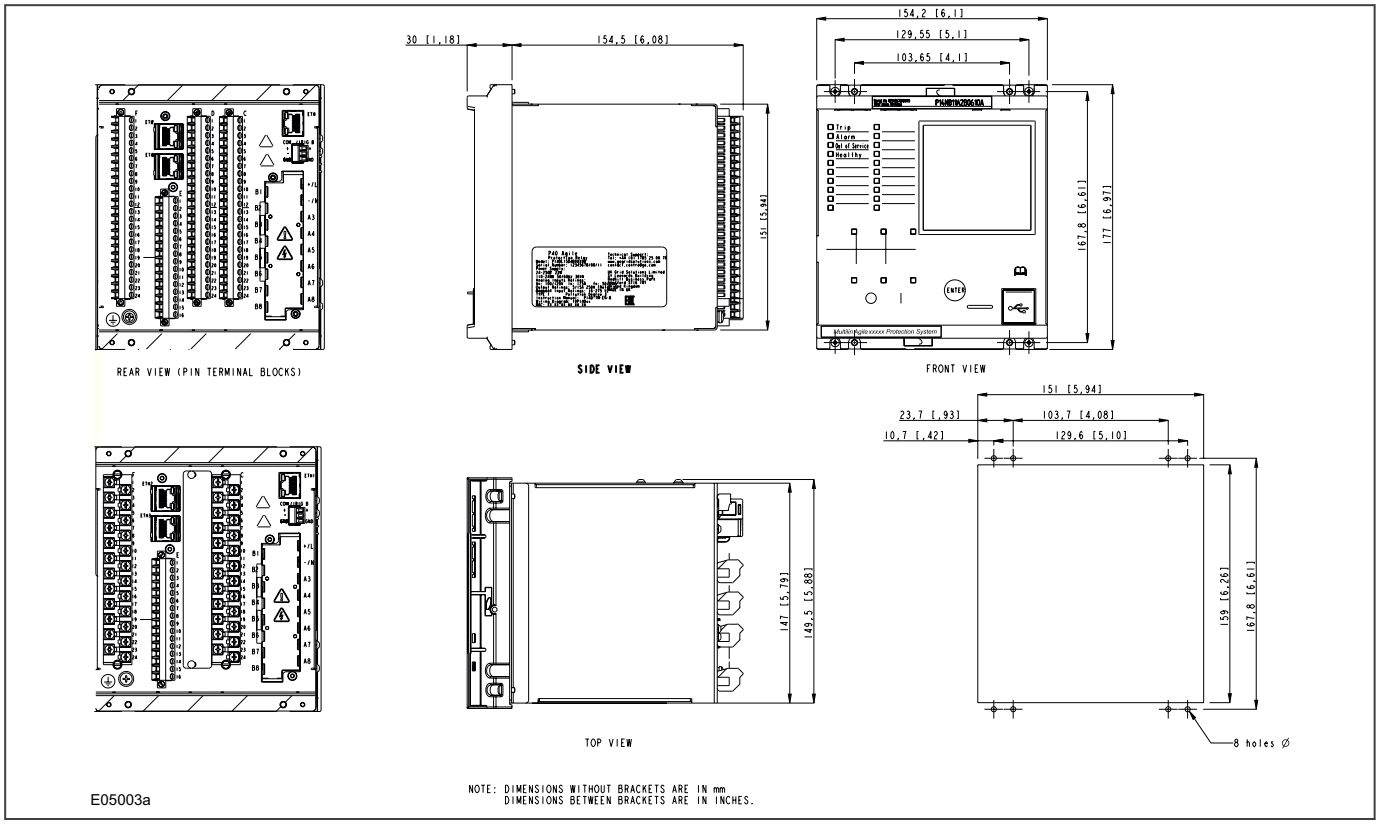

Figure 217: 30TE case dimensions and panel cutout

CHAPTER 21

COMMISSIONING INSTRUCTIONS

21.1 CHAPTER OVERVIEW

This chapter contains the following sections:

Chapter Overview 499
General Guidelines 500
Commissioning Test Menu 501
Commissioning Equipment 505
Product Checks 507
Setting Checks 513
Protection Timing Checks 515
Onload Checks 516
Final Checks 518

21.2 GENERAL GUIDELINES

GE Vernova's IEDs are self-checking devices and will raise an alarm in the unlikely event of a failure. This is why the commissioning tests are less extensive than those for non-numeric electronic devices or electro-mechanical relays.

To commission the devices, you (the commissioning engineer) do not need to test every function. You need only verify that the hardware is functioning correctly and that the application-specific software settings have been applied. You can check the settings by extracting them using the EnerVista Configuration settings software, or by means of the front panel interface (HMI panel).

The menu language is user-selectable, so you can change it for commissioning purposes if required.

Note:
Remember to restore the language setting to the customer's preferred language on completion.

Caution:
Before carrying out any work on the equipment you should be familiar with the contents of the Safety Section or Safety Guide SFTY/4LM as well as the ratings on the equipment's rating label.

Warning:
Do not disassemble the device during commissioning.

21.3 COMMISSIONING TEST MENU

The Multilin Agile IED provides several testing features under *THE* ***SETPOINTS\TESTING*** menu heading in the ***HMI and MONITORING\TESTING*** tab in the EnerVista Configuration software. These testing features facilitate IED testing during commissioning. The testing features supported are as follows:

- Simulation
- Test LEDs
- Opto Inputs
- Relay Outputs
- Autoreclose
- GOOSE

The ***Simulation State*** setting under the ***SETPOINTS\TESTING\SIMULATION\SETUP*** path may be set to `Prefault State`, `Fault State`, `Postfault State` or `Disabled`. The specific ***Pre-Fault***, ***Fault*** and ***Post-Fault*** setting values for each mode can be programmed in its corresponding setting menu under the ***SETPOINTS \TESTING\SIMULATION*** path.

The ***PreFlt-Flt Trig*** setting under the ***SETPOINTS\TESTING\SIMULATION\SETUP*** path sets the signal that triggers the change of state from `Prefault State` to `Fault State`.

The Force Relays setting under the ***SETPOINTS\TESTING\SIMULATION\SETUP*** path enables or disables the relay outputs testing mode. The specific forcing value for each relay output contact is set under the ***SETPOINTS \TESTING\RELAY OUTPUTS*** path.

The ***Force LEDs*** setting under the ***SETPOINTS\TESTING\SIMULATION\SETUP*** path enables or disables the LEDs testing mode. The specific forcing value for each LED is set under the ***SETPOINTS\TESTING\ TEST LEDS*** path.

The Opto inputs states can be simulated by forcing the specific value for each Opto input under the ***SETPOINTS \TESTING\ OPTO INPUTS*** path. The Opto inputs testing mode is enabled when the ***Simulation State*** setting is set to any value except `Disabled`.

When the IED provides the ***Autoreclose*** function (Cortec dependent), the testing mode for ***Autoreclose*** is set under the ***SETPOINTS\TESTING\AUTORECLOSE*** path.

21.3.1 SIMULATION

The Simulation feature under the ***SETPOINTS\TESTING\SIMULATION*** path is provided for testing the functionality of the Multilin Agile IEDs in response to programmed conditions, without the need of external AC voltage and current inputs. First time users will find this to be a valuable training tool. System parameters such as currents, voltages and phase angles are entered as settings. When placed in test mode, the IED suspends reading actual AC inputs, generates samples to represent the programmed phasors, and loads these samples into the memory to be processed by the IED. Normal (pre- fault), fault, and post-fault conditions can simulate a wide variety of system disturbances and utilise many of the Multilin Agile IEDs features.

Program the ***Simulation State*** setting under the ***SETPOINTS\TESTING\SIMULATION*** path to Disabled if actual system inputs are to be monitored and test mode to be disabled.

If the ***Simulation Stat***e setting is set to any other value (Pre-Fault state, Fault state or Post-Fault state), the IED is in test mode and actual system parameters are not monitored, including current, voltage, and opto-inputs. The system parameters simulated by the IED are those corresponding to the programmed value of the ***Simulation State*** setting. For example, if programmed to `Fault State`, then the system parameters are set to those defined by the ***Fault*** setting values under the ***SETPOINTS\TESTING\SIMULATION*** path.

While in test mode, opto-input states are automatically forced to the values set in ***SETPOINTS\TESTING\OPTO INPUTS***.

When the `Fault State` is set as the ***Simulation State*** and a Trip occurs, the Simulation State automatically transitions to the `Postfault State`.

The `Pre-Fault`, `Fault` and `Post-Fault` setting values (magnitudes and angles) are programmed in its corresponding setting menu under the ***SETPOINTS***/***TESTING***/***SIMULATION*** path.

When in test mode, and Force Relays under the ***SETPOINTS\TESTING\SIMULATION\SETUP*** path is `Enabled`, relay output states can be forced from the ***SETPOINTS\TESTING\RELAY OUTPUTS*** menu, this overrides the normal operation of the relay output contacts. When in test mode, and Force Relays is Disabled, the relay output states maintain their normal operation. Forcing of relay outputs states is not performed when the ***Simulation State*** is `Disabled`.

When in test mode, and ***Force LEDs*** is `Enabled`, LED states and colours can be forced from the ***SETPOINTS \TESTING\ TEST LEDS*** menu, this will override the normal operation of the LEDs. When in test mode, and ***Force LEDs*** is `Disabled`, the LED states and colours will maintain their normal operation. Forcing of LEDs is not performed when the ***Simulation State*** is `Disabled`.

21.3.1.1 PRE-FAULT

The `PreFault State` is intended to simulate the normal operating condition of a system by replacing the normal input parameters with programmed pre-fault values. For proper simulation, values entered in the ***SETPOINTS \TESTING\SIMULATION\PRE-FAULT*** menu must be below the minimum trip setting of any protection feature.

When the `PreFault State` is set as the ***Simulation State*** and the conditions of the ***PreFlt-Flt Tri***g setting under the ***SETPOIN***T***\TESTING\SIMULATION\TESTING*** path are met, the ***Simulation State*** automatically transitions from `PreFault` State to `Fault` State.

21.3.1.2 FAULT

The `Fault State` is intended to simulate the faulted operating condition of a system by replacing the normal input parameters with programmed fault values.

When `Fault State` is set as the ***Simulation State*** and a trip occurs, the ***Simulation State*** automatically transitions to the `Postfault State`.

21.3.1.3 POST-FAULT

The `PostFault State` is intended to simulate a system that has tripped by replacing the normal input parameters with programmed postfault values.

> *Note:*
> *For **Pre-Fault**, **Fault** and **Post-Faul**t settings under the **SETPOINT\TESTING\SIMULATION** path:*

> *Note:*
> *Voltage magnitudes are entered in secondary VT units. Primary and secondary settings for VT inputs can be found on VT Ratio menu under the **SETPOINT\SYSTEM\VT RATIO** path.*

> *Note:*
> *Current magnitudes are entered as a multiple of the corresponding **CT Primary** setting. Primary and secondary settings for CT inputs can be found on **CT Ratio** menu under the **SETPOINT\SYSTEM\CT RATIO** path.*

> *Note:*
> *All Simulation settings revert to default values at power up.*

21.3.2 TEST LEDS

The ***Test LEDs*** settings under the ***SETPOINTS\TESTING*** path allows programming of the state and colour of each LED when the device is in test mode and the ***Force LEDs*** setting under ***SETPOINTS\TESTING\SIMULATION \SETUP*** is set to `Enabled`.

All LEDs from 2 till 8 can be tested by changing its colour and state from Off, Green, Orange and Red and the LED will be set to off or to the selected colour in the corresponding LED X setting.

LED 1 can be tested by changing its colour from Off to Red. Green and Orange options are available in the setting selection, but the LED 1 will always turn red with any colour selection.

> *Note:*
> *All **Test LED**s settings revert to default values at power up.*

21.3.3 OPTO-INPUTS

The Opto Inputs settings under ***SETPOINTS\TESTING*** path allows the programming of the state (`Off`, `On`) of each opto-input when the device is in test mode.

> *Note:*
> *All **Opto Inputs** settings revert to default values at power up.*

> *Note:*
> *The number of opto-inputs available for the IED is Cortec dependent.*

21.3.4 IED OUTPUTS

The Relay Outputs settings under the ***SETPOINTS\TESTING*** path allows the programming of the state of each relay output when the device is in test mode and the Force Relays setting under ***SETPOINTS\TESTING \SIMULATION\SETUP*** is set to `Enabled`.

> *Note:*
> *All Relay Outputs settings revert to default values at power up.*

> *Note:*
> *The number of relay outputs available for the IED is Cortec dependent.*

21.3.5 AUTORECLOSE

When the IED provides autoreclose (Cortec dependent function), a `3 Pole Test` command under ***SETPOINTS \TESTING\AUTORECLOSE\TEST AUTORECLOSE*** is available for testing the sequence of circuit breaker trip and autoreclose cycles.

When the ***Test Autoreclose*** setting is set to `3 Pole Test`, a command is issued launching the `AR Trip Test` signal that can be configured to a trip relay output contact to perform the first three phases trip/reclose cycle so that the associated relay output contacts can be checked for operation at the correct times during the cycle. Once the trip output has operated the ***Test Autoreclos***e setting command text will revert to `No Operation` whilst the rest of the autoreclose cycle is performed. To test the subsequent three-phase autoreclose cycles, the 3 Pole test command can be repeated.

Note:
In order for the Test Autoreclose facility to work, the Flexlogic Equation Editor in the device has to contain the AR Trip signal mapped to the trip signals.

21.3.6 GOOSE

When the IED provides GOOSE (IEC 61850B Cortec dependent function), a menu under ***SETPOINTS\TESTING \GOOSE*** is available for testing GOOSE messaging.

- ***TxGOOSE Sim Mode***: When set to disabled, the sim bit in all transmitted GOOSE messages are set to FALSE. When set to enabled, the sim bit in all transmitted GOOSE messages are set to TRUE.
- ***Accept Sim GOOSE***: When set to disabled, the relay "Sim" attribute (LPHD1.Sim.StVal) is set to False and the GOOSE/SV messages received with simulation flag/bet set are ignored. When set to Enabled, the relay "Sim" attribute (LPHD1.Sim.StVal) is set to True, so that if GOOSE/SV messages are received with the "simulation" flag/bit set, these will be used in place of the normal messages.

21.4 COMMISSIONING EQUIPMENT

Specialist test equipment is required to commission this product. We recognise three classes of equipment for commissioning :

- Recommended
- Essential
- Advisory

Recommended equipment constitutes equipment that is both necessary, and sufficient, to verify correct performance of the principal protection functions.

Essential equipment represents the minimum necessary to check that the product includes the basic expected protection functions and that they operate within limits.

Advisory equipment represents equipment that is needed to verify satisfactory operation of features that may be unused, or supplementary, or which may, for example, be integral to a distributed control/automation scheme. Operation of such features may, perhaps, be more appropriately verified as part of a customer defined commissioning requirement, or as part of a system-level commissioning regime.

21.4.1 RECOMMENDED COMMISSIONING EQUIPMENT

The minimum recommended equipment is a multifunctional three-phase AC current and voltage injection test set featuring :

- Controlled three-phase AC current and voltage sources,
- Transient (dynamic) switching between pre-fault and post-fault conditions (to generate delta conditions),
- Dynamic impedance state sequencer (capable of sequencing through 4 impedance states),
- Integrated or separate variable DC supply (0 - 250 V)
- Integrated or separate AC and DC measurement capabilities (0-440V AC, 0-250V DC)
- Integrated and/or separate timer,
- Integrated and/or separate test switches.

In addition, you will need :

- A portable computer, installed with appropriate software to liaise with the equipment under test (EUT). Typically this software will be proprietary to the product's manufacturer.
- Suitable electrical test leads.
- Electronic or brushless insulation tester with a DC output not exceeding 500 V
- Continuity tester
- Verified application-specific settings files

21.4.2 ESSENTIAL COMMISSIONING EQUIPMENT

As an absolute minimum, the following equipment is required:

- AC current source coupled with AC voltage source
- Variable DC supply (0 - 250V)
- Multimeter capable of measuring AC and DC current and voltage (0-440V AC, 0-250V DC)
- Timer
- Test switches
- Suitable electrical test leads
- Continuity tester

21.4.3 ADVISORY TEST EQUIPMENT

Advisory test equipment may be required for extended commissioning procedures:

- Current clamp meter
- Multi-finger test plug:
- Electronic or brushless insulation tester with a DC output not exceeding 500 V
- EIA(RS)485 to EIA(RS)232/USB converter for testing EIA(RS)485 MODBUS/IEC60870-5-103/DNP3 port
- A portable printer (for printing a setting record from the portable PC) and or writeable, detachable memory device.
- Phase angle meter
- Phase rotation meter

21.5 PRODUCT CHECKS

These product checks are designed to ensure that the device has not been physically damaged prior to commissioning, is functioning correctly and that all input quantity measurements are within the stated tolerances.

If the application-specific settings have been applied to the IED prior to commissioning, you should make a copy of the settings. This will allow you to restore them at a later date if necessary. This can be done by:

- Obtaining a setting file from the customer.
- Extracting the settings from the IED itself, using a portable PC with appropriate setting software.

If the customer has changed the password that prevents unauthorised changes to some of the settings, either the revised password should be provided, or the original password restored before testing.

Note:
If the password has been lost, a recovery password can be obtained from GE Vernova.

Note:
CT and VT and protection, control and monitoring features availability for testing and product checks will be Cortec dependent for each model.

21.5.1 PRODUCT CHECKS WITH THE IED DE-ENERGISED

Warning:
The following group of tests should be carried out without the auxiliary supply being applied to the IED and, if applicable, with the trip circuit isolated.

The current and voltage transformer connections must be isolated from the IED for these checks. If a test block is provided, the required isolation can be achieved by inserting a test plug. This open circuits all wiring routed through the test block.

Before inserting the test plug, you should check the scheme diagram to ensure that this will not cause damage or a safety hazard (the test block may, for example, be associated with protection current transformer circuits). The sockets in the test plug, which correspond to the current transformer secondary windings, must be linked before the test plug is inserted into the test block.

Warning:
Never open-circuit the secondary circuit of a current transformer since the high voltage produced may be lethal and could damage insulation.

If a test block is not provided, the voltage transformer supply to the IED should be isolated by means of the panel links or connecting blocks. The line current transformers should be short-circuited and disconnected from the IED terminals. Where means of isolating the auxiliary supply and trip circuit (for example isolation links, fuses and MCB) are provided, these should be used. If this is not possible, the wiring to these circuits must be disconnected and the exposed ends suitably terminated to prevent them from being a safety hazard.

21.5.1.1 VISUAL INSPECTION

Caution:
Check the rating information provided with the device. Check that the IED being tested is correct for the line or circuit.

Carefully examine the IED to see that no physical damage has occurred since installation.

Ensure that the case earthing connections (bottom left-hand corner at the rear of the IED case) are used to connect the IED to a local earth bar using an adequate conductor.

21.5.1.2 INSULATION

Insulation resistance tests are only necessary during commissioning if explicitly requested.

Isolate all wiring from the earth and test the insulation with an electronic or brushless insulation tester at a DC voltage not exceeding 500 V. Terminals of the same circuits should be temporarily connected together.

The insulation resistance should be greater than 100 MΩ at 500 V.

On completion of the insulation resistance tests, ensure all external wiring is correctly reconnected to the IED.

21.5.1.3 EXTERNAL WIRING

Caution:
Check that the external wiring is correct according to the relevant IED and scheme diagrams. Ensure that phasing/phase rotation appears to be as expected.

The auxiliary DC voltage supply uses terminals A1 (supply positive) and A2 (supply negative).

21.5.1.4 WATCHDOG (CRITICAL FAIL) CONTACT

Using a continuity tester, check that the watchdog (Critical Fail) contact is in the following state:

Terminals	De-energised Contact
D23 - D24	Closed

21.5.1.5 POWER SUPPLY

The IED can accept a nominal DC voltage from 24 V DC to 250 V DC, or a nominal AC voltage from 110 V AC to 240 V AC at 50 Hz or 60 Hz. Ensure that the power supply is within this operating range. The power supply must be rated at 10 Watts or more.

Warning:
Do not energise the IED or interface unit using the battery charger with the battery disconnected as this can irreparably damage the power supply circuitry.

Caution:
Energise the IED only if the auxiliary supply is within the specified operating ranges. If a test block is provided, it may be necessary to link across the front of the test plug to connect the auxiliary supply to the IED.

21.5.2 PXXX_CI_PRODUCTCHECKSENERGISED

Warning:
The current and voltage transformer connections must remain isolated from the IED for these checks. The trip circuit should also remain isolated to prevent accidental operation of the associated circuit breaker.

The following group of tests verifies that the IED hardware and software is functioning correctly and should be carried out with the supply applied to the IED.

21.5.2.1 WATCHDOG (CRITICAL FAIL) CONTACT

Using a continuity tester, check that the watchdog (Critical Fail) contact is in the following state:

Terminals	Energised Contact
D23 - D24	Open

21.5.2.2 DATE AND TIME

The date and time is stored in non-volatile memory. If the values are not already correct, set them to the correct values. The method of setting will depend on whether accuracy is being maintained by the IRIG-B port or by the IEDs internal clock.

When using IRIG-B to maintain the clock, the IED must first be connected to the satellite clock equipment, which should be energised and functioning.

1. Set the ***IRIG-B*** setting under the path ***SETPOINT\DEVICE\DATE AND TIME*** to `Enabled`.
2. Ensure the IED is receiving the IRIG-B signal by checking that ***Clock*** Status at ***DEVICE STATUS\CLOCK \RTC SYNC SOURCE*** reads ***IRIG-B***.
3. Once the IRIG-B signal is active, adjust the time offset of the universal coordinated time (satellite clock time) on the satellite clock equipment so that local time is displayed.
4. Check that the time, date and month are correct in the ***SETPOINT\DEVICE\DATE AND TIME\CLOCK*** element. The IRIG-B signal does not contain the current year so it will need to be set manually.
5. Reconnect the IRIG-B signal.

If the time and date is not being maintained by an IRIG-B signal, ensure that the ***IRIG-B*** setting in the ***DATE AND TIME*** element is set to `Disabled`. Set the date and time to the correct local time and date using the ***SETPOINT \DEVICE\DATE AND TIME\CLOCK*** element, the ***SETPOINTS\DEVICE\DATE AND TIME\PTP***, the ***SETPOINTS \DEVICE\DATE AND TIME\SNTP*** or the communication protocols.

21.5.2.3 TEST LEDS

If any of the LEDs are ON then they should be reset before proceeding with further testing. If the LEDs successfully reset (the LED goes off), no testing is needed for that LED because it is obviously operational.

For more detail on LEDs testing refer to the ***Commissioning Test*** Menu in this chapter.

Return the IED to service by setting the ***Simulation State*** to `Disabled` in the ***SETPOINTS\TESTING \SIMULATION\SETUP*** menu.

21.5.2.4 TEST OPTO-INPUTS

This test checks that all the opto-inputs on the IED are functioning correctly.

The opto-inputs should be energised one at a time. For terminal numbers, refer to the Wiring Diagrams Appendix. Ensuring correct polarity, connect the supply voltage to the appropriate terminals for the input being tested.

The status of each opto-input can be viewed using the ***DEVICE STATUS\OPTO INPUTS*** element.

`On` indicates an energised opto-input and `Off` indicates a de-energised opto-input.

Opto-inputs can be simulated when the device is in test mode (set the Simulation State setting under the ***SETPOINTS\TESTING\SIMULATION\SETUP*** path to any value but Disabled). The existing status of each opto-input can be changed from `Off` to `On` and vice versa. Take into account that this simulates the opto input, so any logic associated with it should be checked.

If the opto-inputs have been tested using the IED test mode, ensure to return the IED to service by setting the Simulation State to Disabled in the ***SETPOINTS\TESTING\SIMULATION\SETUP*** menu.

The rest of the test mode settings should also be set to their default values.

21.5.2.5 TEST IED OUTPUTS

This test checks that all the output relays are functioning correctly.

1. Ensure that the IED is in test mode by checking that the Simulation State setting under ***SETPOINTS \TESTING\SIMULATION\SETUP*** is set to any value except `Disabled` and that the ***Force Relay***s setting under ***SETPOINTS\TESTING\SIMULATION\SETUP*** is set to `Enabled`.
2. The relay output contacts should be energised one at a time. To select any relay output relay for testing, set the corresponding relay output setting at ***SETPOINT\TESTING\RELAY OUTPUT*** *AS APPROPRIATE.*
3. Connect a continuity tester across the terminals corresponding to the relay output contact being tested as shown in the external wiring diagram.
4. To operate the relay output contact change the relay output status at ***SETPOINT\TESTING\RELAY OUTPUTS***.
5. Check the operation with the continuity tester.
6. Measure the resistance of the contacts in the closed state.
7. Reset the relay output contact by changing the relay output status.
8. Repeat the test for all the relay output contacts.
9. Return the IED to service by setting the ***Simulation State*** to `Disabled` in the ***SETPOINTS\TESTING \SIMULATION\SETUP*** menu. The rest of the test mode settings should also be set to their default values.

> *Note:*
> *Take into account that all relay output contacts are normally open, but the watchdog (Relay Output 8 or 6 depending on the Binary Input/Output Options ordered) that is normally closed.*

21.5.2.6 TEST SERIAL COMMUNICATION PORT COM1

You need only perform this test if the IED is to be accessed from a remote location with a permanent serial connection to the communications port. The scope of this test does not extend to verifying operation with connected equipment beyond any supplied protocol converter. It verifies operation of the rear communication port (and if applicable the protocol converter) and varies according to the protocol fitted.

21.5.2.6.1 CHECK PHYSICAL CONNECTIVITY

The rear communication port COM1 is on the rear of the IED. Screened twisted pair cable is used to make a connection to the port.

EIA(RS)485 is polarity sensitive, so you must ensure the wires are connected the correct way round.

If RS485 is being used, an RS485-RS232/USB converter will have been installed. In the case where a protocol converter is being used, a laptop PC running appropriate software can be connected to the incoming side of the protocol converter. Most modern laptops have USB ports, so it is likely you will also require a RS232 to USB converter too.

21.5.2.6.2 CHECK LOGICAL CONNECTIVITY

The logical connectivity depends on the chosen data protocol, but the principles of testing remain the same for all protocol variants:

1. Ensure that the communications baud rate and parity settings in the application software are set the same as those on the protocol converter.
2. Check that communications can be established with this IED using the portable PC/Master Station.

21.5.2.7 TEST SERIAL COMMUNICATION PORT COM2

For products that employ Ethernet communications, we recommend that testing be limited to a visual check that the correct ports are working and that there is no sign of physical damage.

21.5.2.8 TEST ETHERNET COMMUNICATION

COM2 is a Cortec dependent option. If applicable, this test is the same as for COM1, just taking into account that the terminal connections are different. Refer to Appendix C Wiring Diagrams for terminal connections details and to Appendix A Ordering Options for Cortec detailed description.

21.5.2.9 TEST CURRENT INPUTS

This test verifies that the current measurement inputs are configured correctly.

All devices leave the factory set for operation at a system frequency of 50 Hz. If operation at 60 Hz is required then this must be set in the ***Nom. Frequency*** setting at ***SETPOINTS\SYSTEM\POWER SYSTEM***.

1. Apply current equal to the line current transformer secondary winding rating to each current transformer input in turn. Ensure that the CT RATIO settings (primary and secondary for all current inputs) under ***SETPOINTS \SYSTEM*** are properly set.
2. Check its magnitude using a multimeter or test set readout. The corresponding reading can then be checked in the ***MEASUREMENTS\CT1 BANK-B*** menu.

An additional allowance must be made for the accuracy of the test equipment being used.

***Measurement\CT1 Bank-B* Menu**	**Corresponding CT Ratio (in CT and VT Ratios Menu)**
CT1 IA CT1 IB CT1 IC	Phase CT Primary/Phase CT Sec'y
CT1 IN2 (derived current)	E/F CT Primary/E/F CT Sec'y
CT1 IN1 (EF measured current)	E/F CT Primary/E/F CT Sec'y
CT1 SEF (SEF measured current)	SEF CT Primary/SEF CT Sec'y

Note:
E/F or SEF current values are displayed for each device depending of the Cortec selected.

21.5.2.10 TEST VOLTAGE INPUTS

This test verifies that the voltage measurement inputs are configured correctly.

1. Apply rated voltage to each voltage transformer input in turn.. Ensure that the VT RATIO settings (primary and secondary for all current inputs) under ***SETPOINTS\SYSTEM*** are properly set.
2. Check its magnitude using a multimeter or test set readout. The corresponding reading can then be checked in the ***MEASUREMENTS\PH VT1BANK-A*** and ***MEASUREMENT\4th VT1 BANK-A*** menus.

Measurements\PH VT1 Bank-A and Measurement\ 4th VT1 Bank-A Menus	**Corresponding VT Ratio (in *CT and VT Ratios*)**
VT1 VAN VT1 VBN VT1 VCN	Main VT Primary/Main VT Sec'y
4th VT1 Mag	4th VT Primary/4th VT Sec'y

21.6 SETTING CHECKS

The setting checks ensure that all of the application-specific settings (both the IEDs function and Flexlogic Equation Editor settings) have been correctly applied.

> *Note:*
> *If applicable, the trip circuit should remain isolated during these checks to prevent accidental operation of the associated circuit breaker.*

21.6.1 APPLY APPLICATION-SPECIFIC SETTINGS

There are two different methods of applying the settings to the IED

- Transferring settings to the IED from a pre-prepared setting file using EnerVista Configuration software
- Enter the settings manually using the IEDs front panel HMI

21.6.1.1 TRANSFERRING SETTINGS FROM A SETTINGS FILE

This is the preferred method for transferring function settings. It is much faster and there is a lower margin for error.

1. Connect a PC running the EnerVista Configuration software Settings Application Software to the IEDs USB front port, or the rear Ethernet port.
2. Power on the IED
3. Create or open an existing project including the CID file for the IED and click in the appropriate device name in the project and select ***Send CID*** from the top toolbox.
4. Enter the IP address of the device related to the interface selected, USB or Ethernet
5. In the **User Authentication** dialog select the Username and Password and click **Continue** and then **Finish**

> *Note:*
> *The device CID file may not already exist in the **project**. In this case, select Qui**ck Download fr**om the top toolbox entering the appropriate IP address for the interface selected (USB or Ethernet) and, then manually add the settings file to the device name in the project. Refer to the EnerVista Configuration chapter for details.*

21.6.1.2 ENTERING SETTINGS USING THE HMI

1. Starting at the default display, press the Down cursor key to navigate through the HMI menus.
2. Use the vertical cursor keys to select the required Setpoint setting under SETPOINTS menu.
3. Press ***OK*** to access to the next menu and to view the setting data in the selected menu.
4. To return to the previous header menu press the **Cancel** key once.
5. To return to the default display, press the Cancel key repeatedly from any of the menu headings until the default display is reached.
6. To change the value of a setting, go to the relevant setting in the menu, then press the **Enter** key to change the setting value. A steady cursor on the LCD shows that the value can be changed. You may be prompted for a password first.
7. To change the setting value, press the vertical cursor keys.
8. Press the **Enter** key to confirm the new setting value.
9. The changes must be confirmed before they are used. When all required changes have been entered, press the Clear key. Before returning to the default display, the following prompt appears.

```
CONFIRM CHANGES?
NO YES
```

10. Press the **YES** right Up key key to accept the new settings or press the **NO** left Up key key to discard the new settings.

Note:
It is not possible to change the Flexlogic Equation Editor or IEC 61850 configuration using the IEDs front panel HMI.

Caution:
Where the installation needs the application-specific Flexlogic Equation Editor, the relevant logic must be transferred to the IED, taking into account that the logic should apply for each and every setting group that will be used.

21.7 PROTECTION TIMING CHECKS

There is no need to check every protection function. Only one protection function needs to be checked as the purpose is to verify the timing on the processor is functioning correctly.

21.7.1 OVERCURRENT CHECK

If the overcurrent protection function is being used, test the overcurrent protection for stage 1.

1. Check for any possible dependency conditions and simulate as appropriate.
2. In the *SETPOINTS* menu, disable all protection elements other than the one being tested.
3. Make a note of which elements need to be re-enabled after testing.
4. Connect the test circuit.
5. Perform the test.
6. Check the operating time.

21.7.2 CONNECTING THE TEST CIRCUIT

1. Use the Flexlogic Equation Editor and device setpoints to determine which output relay will operate when an overcurrent trip occurs.
2. Relay output 1 is pre-configured to trip.
3. Use the Flexlogic Equation Editor and device setpoints to map the protection stage under test directly to a relay output other than ***RELAY 1-TRIP,*** in case a different output (other than 1) would be needed for testing purposes.
4. Connect the output relay so that its operation will trip the test set and stop the timer.
5. Connect the current output of the test set to the A-phase current transformer input.
6. Ensure that the timer starts when the current is applied.

21.7.3 PERFORMING THE TEST

1. Ensure that the timer is reset.
2. Apply a current of twice the setting shown in the ***I>1 Current Set*** setting in the *CORRESPONDING* ***CURRENT PROT.*** setpoint.
3. Note the time displayed when the timer stops.
4. Check that the red trip LED has illuminated.

21.7.4 CHECK THE OPERATING TIME

Check that the operating time recorded by the timer is within the range shown in the technical specification for each function.

For all characteristics, allowance must be made for the accuracy of the test equipment being used.

Caution:
On completion of the tests, you must restore all settings to customer specifications.

21.8 ONLOAD CHECKS

Warning:
Onload checks are potentially very dangerous and may only be carried out by qualified and authorised personnel.

Onload checks can only be carried out if there are no restrictions preventing the energisation of the plant, and the other devices in the group have already been commissioned.

Remove all test leads and temporary shorting links, then replace any external wiring that has been removed to allow testing.

Warning:
If any external wiring has been disconnected for the commissioning process, replace it in accordance with the relevant external connection or scheme diagram.

Warning:
Ensure that the IED is in service and that the test mode is disabled.

21.8.1 CONFIRM CURRENT CONNECTIONS

1. Measure the current transformer secondary values for each input using a multimeter connected in series with the corresponding current input, or using an amperometric clamp.
2. Check that the current transformer polarities are correct by measuring the phase angle between the current and voltage, either against a phase meter already installed on site and known to be correct or by determining the direction of power flow by contacting the system control centre.
3. Ensure the current flowing in the neutral circuit of the current transformers is negligible.
4. Compare the values of the secondary phase currents and phase angle with the measured values, IED current measurements can be found in the ***MEASUREMENTS\CT1 BANK-B*** menu.

21.8.2 CONFIRM VOLTAGE CONNECTIONS

1. Using a multimeter, measure the voltage transformer secondary voltages to ensure they are correctly rated.
2. Check that the system phase rotation is correct using a phase rotation meter.
3. Compare the values of the secondary phase voltages with the measured values, IED voltage measurements can be found in the ***MEASUREMENTS\PH VT1 BANK-A*** and ***MEASUREMENTS\4th VT1 BANK-A*** menus.

Measurements\PH VT1 Bank-A and Measurement\4th VT1 Bank-A Menus	Corresponding VT Ratio in CT and VT Ratios Column
VT1 VAN ***VT1 VBN*** ***VT1 VCN*** ***VT1 VAB*** ***VT1 VBC*** ***VT1 VCA***	Main VT Primary/Main VT Sec'y
4th VT1 Mag	4th VT Primary/4th VT Sec'y

21.8.3 ON-LOAD DIRECTIONAL TEST

This test ensures that directional overcurrent and fault locator functions have the correct forward/reverse response to fault and load conditions. The availability of the directional overcurrent and fault location functions will be cortec and model dependent. For this test you must first know the actual direction of power flow on the system. If you do not already know this you must determine it using adjacent instrumentation or protection already in-service.

- For load current flowing in the Forward direction (power export to the remote line end), the ***A Phase Watts*** value in the ***MEASUREMENTS\POWER 1*** menu should show positive power signing.
- For load current flowing in the Reverse direction (power import from the remote line end), the ***A Phase Watts*** value in the ***MEASUREMENTS\POWER 1*** menu should show negative power signing.

In the event of any uncertainty, check the phase angle of the phase currents with respect to their phase voltage.

21.9 FINAL CHECKS

1. Remove all test leads and temporary shorting leads.
2. If you have had to disconnect any of the external wiring in order to perform the wiring verification tests, replace all wiring, fuses and links in accordance with the relevant external connection or scheme diagram.
3. The settings applied should be carefully checked against the required application-specific settings to ensure that they are correct, and have not been mistakenly altered during testing.
4. Ensure that all protection elements required have been set to `Enabled` in the *SETPOINTS* menus.
5. Ensure that the IED has been restored to service by checking that the ***Simulation State*** setting in the ***SETPOINTS\TESTING\SIMULATION\SETUP*** menu is set to `Disabled`.
6. If the IED is in a new installation or the circuit breaker has just been maintained, the circuit breaker maintenance and current counters should be zero. These counters can be reset using the ***All Records*** command under ***SETPOINTS\DEVICE\CLEAR RECORDS*** menu. If the required access level is not active, the device will prompt for a password to be entered so that the setting change can be made.
7. If the menu language has been changed to allow accurate testing it should be restored to the customer's preferred language.
8. If a test block is installed, remove the test plug and replace all wiring so that the protection is put into service.
9. Ensure that all event records, fault records, disturbance records, alarms and LEDs and communications statistics have been reset.

Note:
Remember to restore the language setting to the customer's preferred language on completion.

CHAPTER 22

MAINTENANCE AND TROUBLESHOOTING

22.1 CHAPTER OVERVIEW

The Maintenance and Troubleshooting chapter provides details of how to maintain and troubleshoot Multilin Agile products. Always follow the warning signs in this chapter. Failure to do so may result injury or defective equipment.

Caution:
Before carrying out any work on the equipment you should be familiar with the contents of the Safety Section or the Safety Guide SFTY/4LM and the ratings on the equipment's rating label.

The troubleshooting part of the chapter allows an error condition on the IED to be identified so that appropriate corrective action can be taken.

If the device develops a fault, it is usually possible to identify which module needs replacing. It is not possible to perform an on-site repair to a faulty module.

If you return a faulty unit or module to the manufacturer or one of their approved service centres, you should include a completed copy of the Repair or Modification Return Authorization (RMA) form.

This chapter contains the following sections:

Chapter Overview 520

Maintenance 521

Troubleshooting 524

22.2 MAINTENANCE

22.2.1 MAINTENANCE CHECKS

In view of the critical nature of the application, GE Vernova products should be checked at regular intervals to confirm they are operating correctly. GE Vernova products are designed for a life in excess of 20 years when the environment and electrical conditions are within stated specifications.

The devices are self-supervising and so require less maintenance than earlier designs of protection devices. Most problems will result in an alarm, indicating that remedial action should be taken. However, some periodic tests should be carried out to ensure that they are functioning correctly and that the external wiring is intact. It is the responsibility of the customer to define the interval between maintenance periods. If your organisation has a Preventative Maintenance Policy, the recommended product checks should be included in the regular program. Maintenance periods depend on many factors, such as:

- The operating environment
- The accessibility of the site
- The amount of available manpower
- The importance of the installation in the power system
- The consequences of failure

Although some functionality checks can be performed from a remote location, these are predominantly restricted to checking that the unit is measuring the applied currents and voltages accurately, and checking the circuit breaker maintenance counters. For this reason, maintenance checks should also be performed locally at the substation.

Caution:
Before carrying out any work on the equipment you should be familiar with the contents of the Safety Section or the Safety Guide SFTY/4LM and the ratings on the equipment's rating label.

22.2.1.1 TARGETS AND ALARMS

Target messages are automatically displayed for any active condition on the IED such as pickups, trips, or alarms or minor or major errors. The IED displays the most recent event first, active target messages will be displayed until the conditions clear.

Target and Alarm messages can be reviewed by accessing the Targets menu using the Up and Down keys in the display, or using the Read key in case the Alarm LED is ON.

For Non-latched Alarms the Alarm LED flashes until the alarm conditions disappears, then it switches OFF.

For Latched Alarms the Alarm LED flashes until the alarm condition disappears, then changes to constantly ON.

When the alarms are cleared, the Alarm LED switches OFF.

22.2.1.2 OPTO-INPUTS

Check the opto-inputs by repeating the commissioning test detailed in the Commissioning chapter.

22.2.1.3 IED OUTPUT CONTACTS

Check the relay output contacts by repeating the commissioning test detailed in the Commissioning chapter.

22.2.1.4 MEASUREMENT ACCURACY

If the power system is energised, the measured values can be compared with known system values to check that they are in the expected range. If they are within a set range, this indicates that the A/D conversion and the calculations are being performed correctly. Suitable test methods can be found in Commissioning chapter.

Alternatively, the measured values can be checked against known values injected into the device using the test block, (if fitted) or injected directly into the device's terminals. Suitable test methods can be found in the Commissioning chapter. These tests will prove the calibration accuracy is being maintained.

22.2.1.5 EXTERNAL DAMAGE

Complete a visual inspection for any damage, corrosion, dust, or loose wires.

22.2.1.6 RECORDS

Check Event Recorder file downloads, with further events analysis.

22.2.1.7 GENERAL MAINTENANCE

As the relay is microprocessor-based, its characteristics do not change over time. In addition, the relay has continuous self-monitoring during operation, reporting any issues detected. For these reasons, routine maintenance of the relay is not required. When used in a controlled indoor environment with electrical conditions compliant with the specifications, the expected service life is 20 years, if manufactured after June 2014.

We appreciate that some customer maintenance practices stipulate routine maintenance of products in excess of the manufacturer’s recommendation. Should this be your organization’s policy, you might consider the following maintenance options:

In-service maintenance

- Visual verification of the analog values integrity, such as voltage and current (in comparison to other devices on the corresponding system).
- Visual verification of active alarms, relay display messages, and LED indications.
- LED test.
- Visual inspection for any damage, corrosion, dust, or loose wires.
- Event recorder file download with further events analysis.

Out-of-service maintenance

- Check wiring connections for firmness.
- Analog values (currents, voltages, RTDs, analog inputs) injection test and metering accuracy verification. Calibrated test equipment is required.
- Protection elements setting verification (analog values injection or visual verification of setting file entries against relay settings schedule).
- Contact inputs and outputs verification. This test can be conducted by direct change of state forcing or as part of the system functional testing.
- Visual inspection for any damage, corrosion, or dust.
- Event recorder file download with further events analysis.
- LED Test and pushbutton continuity check.

Note:
To avoid deterioration of electrolytic capacitors, power up units that are stored in a de-energized state once per year, for one hour continuously.

Unscheduled maintenance (system interruption)

View the event recorder and oscillography or fault report for correct operation of inputs, outputs, and elements.

22.2.2 REPLACING THE UNIT

If your product should develop a fault while in service, depending on the nature of the fault, the watchdog contacts will change state and an alarm condition will be flagged. In the case of a fault, you should normally replace the cradle which slides easily out of the case. This can be done without disturbing the scheme wiring.

In the unlikely event that the problem lies with the wiring and/or terminals, then you must replace the complete device, rewire and re-commission the device.

Caution:
If the repair is not performed by an approved service centre, the warranty will be invalidated.

Caution:
Before carrying out any work on the equipment, you should be familiar with the contents of the Safety Information section of this guide or the Safety Guide SFTY/4LM, as well as the ratings on the equipment's rating label. This should ensure that no damage is caused by incorrect handling of the electronic components.

Warning:
Before working at the rear of the unit, isolate all voltage and current supplying it.

To replace the cradle without disturbing the case and wiring:

1. Remove the faceplate.
2. Carefully withdraw the cradle from the front.

To reinstall the unit, follow the above instructions in reverse, ensuring that each connector is relocated in the correct position and all connections are replaced. The terminal blocks are labelled alphabetically with 'A' on the right hand side when viewed from the rear.

Once the unit has been reinstalled, it should be re-commissioned as set out in the Commissioning chapter.

22.2.3 CLEANING

Warning:
Before cleaning the device, ensure that all AC and DC supplies and transformer connections are isolated, to prevent any chance of an electric shock while cleaning.

Only clean the equipment with a lint-free cloth dampened with clean water. Do not use detergents, solvents or abrasive cleaners as they may damage the product's surfaces and leave a conductive residue.

22.3 TROUBLESHOOTING

22.3.1 SELF-DIAGNOSTIC SOFTWARE

The device includes several self-monitoring functions to check the operation of its hardware and software while in service. If there is a problem with the hardware or software, it should be able to detect and report the problem.

The self-monitoring is implemented in two stages: firstly a thorough diagnostic check which is performed on boot-up, and secondly a continuous self-checking operation, which checks the operation of the critical functions whilst it is in service.

22.3.2 POWER-UP ERRORS

If the IED does not appear to power up, use the following checks to determine whether the fault is in the external wiring, auxiliary fuse, IED power supply module or IED front panel.

Test	Check	Action
1	Measure the voltage on terminals A2 and A1. Verify the voltage level and polarity against the rating label	If the auxiliary voltage is correct, go to test 2. Otherwise check the wiring and fuses in the auxiliary supply.
2	Check the LEDs and LCD backlight switch on at power-up. Also check the N/C (normally closed) watchdog contact to see if it opens.	If the LEDs and LCD backlight do not switch on and the N/C Watchdog contact does not open, the fault is probably in the IED PSU.

22.3.3 SELF-TEST ERRORS

The IED performs self diagnostics at initialisation (after power up), and continuously as a background task to ensure that the hardware and software are functioning correctly.

There are two types of self-test warnings indicating either a minor or major problem. Minor problems indicate a problem with the IED that does not compromise protection of the power system. Major errors indicate a problem with the IED which takes it out of service.

Caution:
Self-Test Warnings may indicate a serious problem with the relay hardware.

Upon detection of a minor problem, the IED will:

- Display the detailed description of the error on the IED display as a target message
- Record the minor self-test error in the Event Recorder.
- Flash the ALARM LED.

When Trip is selected as a function, upon detection of a major problem, the relay will:

- Energize the relay assigned under setting ***Output Relay***
- De-energize all the other output relays
- Turn the "IN SERVICE" LED orange
- Flash the "Alarm" LED
- Assert ‘Any Major Error’ FlexLogic operand
- Display the major self-test error as a target message
- Record the major self-test error in the Event Recorder
- Prevent the execution of protection functions including the Trip Element, by taking the relay out of service

When Alarm is selected as a function, upon detection of a major problem, the relay will:

- Flash the "ALARM" LED
- Assert ‘Any Major Error’ FlexLogic operand
- Display the **major self-test** error as a target message
- Record the **major self-test** error in the Event Recorder
- Continue to run protection elements as normal, keeping the relay in service

Note:
The normally closed Critical Failure Relay (Relay Output 8 or 6 depending on the Binary Input/Output Options ordered) is energised (open) when the IED is in-service, and no major error is present.

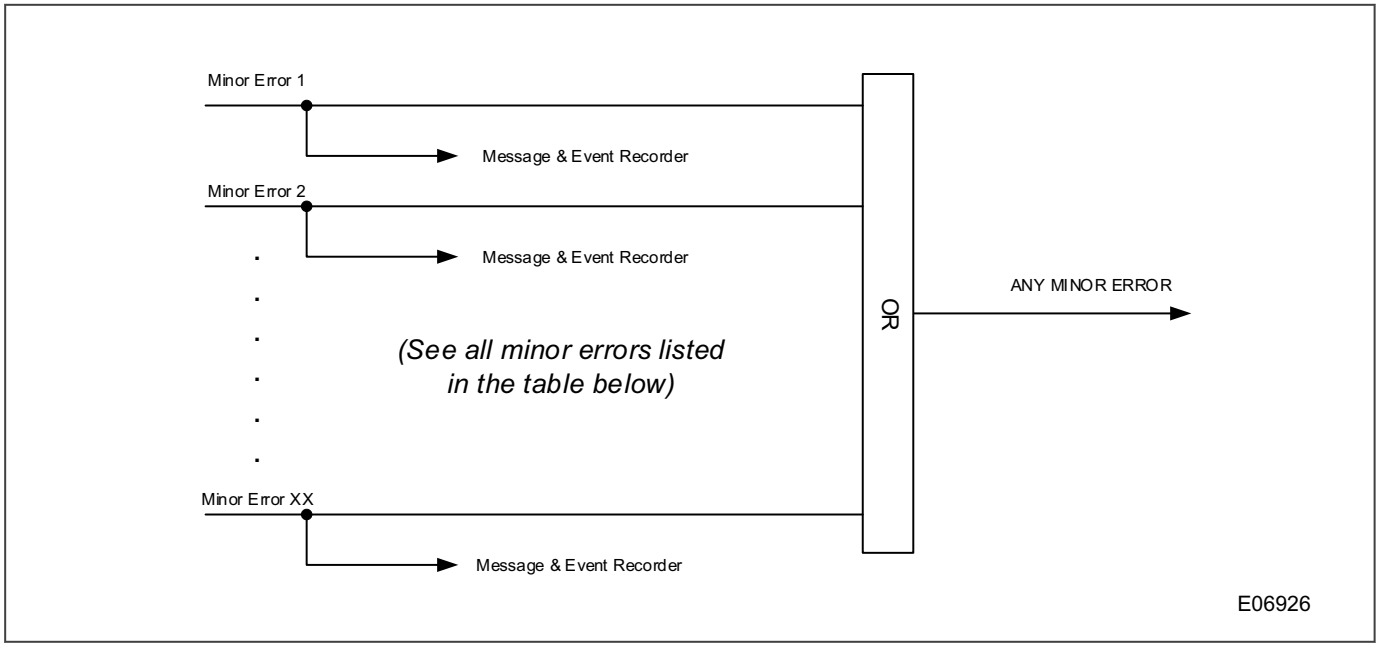

Figure 218: Minor error events and message generation

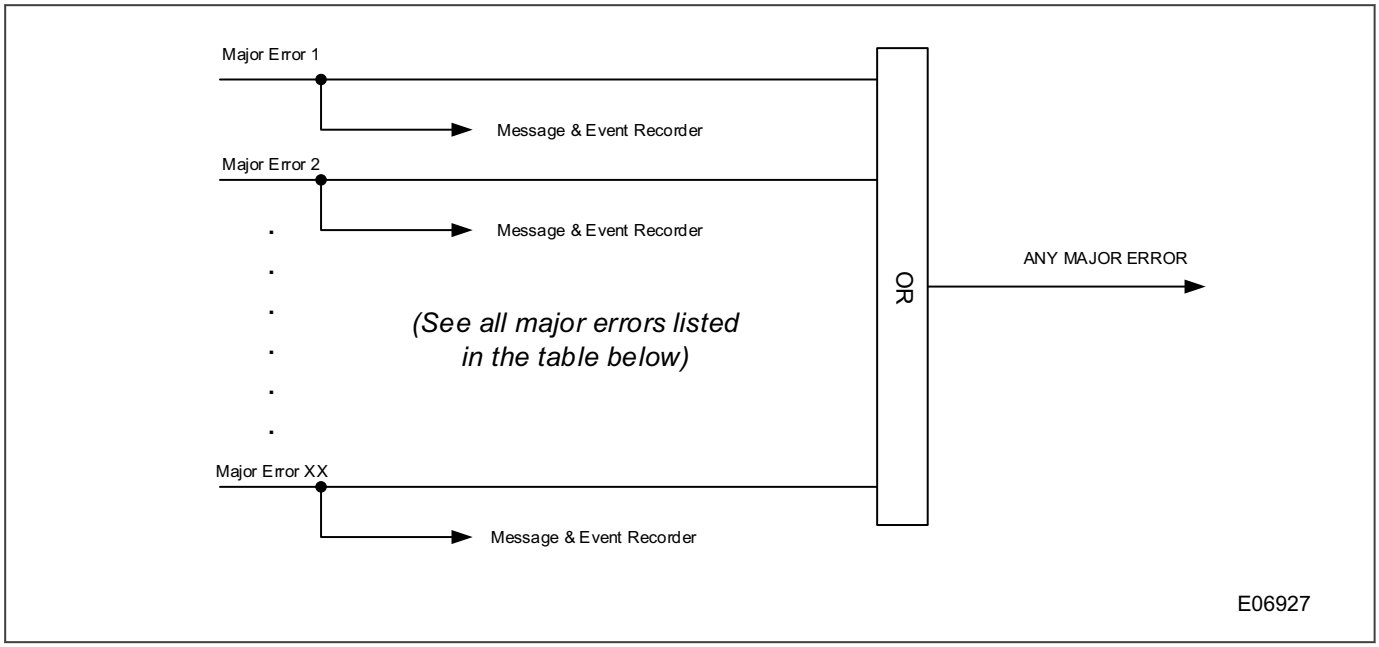

Figure 219: Major error events and message generation

Minor self-test errors

Self-Test Error Message	Description of the Problem	How Often the Test is Performed	What to Do
Order Code Error	Hardware doesn't match order code	Every 2.5 seconds	If alert doesn't self-reset, then contact factory. Otherwise monitor re-occurrences as a momentary error was detected but recovered.
CPU S/N Invalid	CPU card doesn't have valid data to match the order code.	Every 2.5 seconds	
Slot 'n' IO S/N Invalid (see note below)	IO card located in slot 'n' doesn't have valid data to match the order code.	Every 2.5 seconds	
PSU S/N Invalid	Power Supply Unit doesn't have valid data to match the order code.	Every 2.5 seconds	
RTC Error	The CPU cannot read the time from the real time clock	Every 2.5 seconds	
Product Serial Invalid	The product serial number doesn't match the product type	Every 2.5 seconds	
Serial Comm.1 Error	Errors when initializing or accessing serial port 1.	Every 2.5 seconds	
Serial Comm.2 Error	Errors when initializing or accessing serial port 2.	Every 2.5 seconds	
FLASH Error	The permanent storage memory has been corrupted	Every 2.5 seconds	
SPI Error	Communication error between CPU and LEDs, Keypad or peripheral memory devices	Every 2.5 seconds	
Invalid MAC Address	MAC address is not in the product range	Every 2.5 seconds	

Self-Test Error Message	Description of the Problem	How Often the Test is Performed	What to Do
Link Error Primary	ETH1 port is not connected	Every 2.5 seconds	Ensure Ethernet cable is connected, check cable functionality (i.e. physical damage or perform continuity test) and ensure master or peer device is functioning. If none of these apply, contact the factory.
Link Error Secondary	ETH2 port is not connected	Every 2.5 seconds	
Link Error Third	ETH3 port is not connected	Every 2.5 seconds	
Traffic Error Primary	Abnormally high amount of Broadcast and Uni-cast traffic on Eth1 port	Every 2.5 seconds	Contact site IT department to check network for malfunctioning devices
Ambient Temperature >80C	The ambient temperature surrounding the product has exceeded 80°C (176°F)	Every 2.5 seconds	Inspect mounting enclosure for unexpected heat sources (i.e loose primary cables) and remove accordingly
IRIG-B Failure	A bad IRIG-B input signal has been detected	Every 2.5 seconds	Ensure IRIG-B cable is connected, check cable functionality (i.e. physical damage or perform continuity test), ensure IRIG-B receiver is functioning, and check input signal level (it may be less than specification). If none of these apply, contact the factory.
STNP Failure	Synchronization from a SNTP server failed.	Every 2.5 seconds	Ensure Ethernet connection, check cable functionality (i.e. physical damage) and ensure SNTP server configuration is correct. If none of these apply, contact the factory.
PTP Failure	Synchronization from a PTP master failed.	Every 2.5 seconds	Ensure Ethernet connection, check cable functionality (i.e. physical damage) and ensure PTP settings are correct. If none of these apply, contact the factory.
Version Mismatch	CPU firmware revision must match with Order Code and CID.	Boot-up and Every 2.5 seconds	Ensure CPU was uploaded during the upgrade process. Ensure Order Code and CID are correct.
SelfTestFWUpdate	The updating of the firmware failed	Every 2.5 seconds	Re-try uploading firmware. If the upload doesn't work a second time contact factory

Major self-test errors

Self-Test Error Message	Description of the Problem	How Often the Test is Performed	What to Do
Out-Of-Service	The ***Device InService*** setting at ***SETPOINTS\DEVICE\ INSTALLATION*** menu is not in a programmed state (Not Ready).	On power up and whenever ***Device InService*** setting at ***SETPOINTS\DEVICE\ INSTALLATION*** menu	Program all required settings and then set the ***Device InService*** setting at ***SETPOINTS\DEVICE\ INSTALLATION*** menu to Ready.
Major Self-Test (error code)	Unit hardware failure detected	Every 2.5 seconds	Contact the factory and supply the failure code as noted on the display.

where 'n' is the slot ID (i.e. F, G, H etc.)

Slot F =IO Board

Slot G = IO Extension Board

Slot J = CT/VT Board

Under both conditions (minor and/or major errors), the targets cannot be cleared if the error is still active.

Major self-test errors failure codes (Format Code FC240)

Code	Type	Definition	Description
FC240	unsigned 32 bits	Self Test Error	
	0x00000001	Order Code Error	Hardware doesn't match the order code
	0x00000002	System Health Error	System health is compromised due to a task failure flagged by software watchdogs
	0x00000004	CPU Serial# Invalid	CPU card doesn’t have valid data to match the order code
	0x00000008	Slot F I/O SN Invalid	IO card located in slot F doesn’t have valid data to match the order code
	0x00000010	Slot G I/O SN Invalid	IO card located in slot G doesn’t have valid data to match the order code
	0x00000100	Slot J I/O SN Invalid	IO card located in slot J doesn’t have valid data to match the order code
	0x00002000	CalibrationError	Calibration procedure failed due to EEPROM access error, bad calibration checksum or bad calibration data
	0x00004000	RTC Error	The CPU cannot read the time from the real time clock
	0x00010000	FLASH Error	The permanent storage memory has been corrupted or damaged, or it is near the end of its lifetime
	0x00020000	EEPROM Error	EEPROM access from host failed due to a read error, write error or CRC error
	0x00020000	Ambient Temperature <80°C	The ambient temperature surrounding the product has exceeded 80°C
	0x00800000	CriticalPath Error	A failure along the metering path was detected, because no measurement events arrived within the corresponding timeout

22.3.4 ERROR CODE DURING OPERATION

The IED performs continuous self-checking. If the IED detects an error it displays an error message, logs a maintenance record in the event recorder. A permanent problem (for example due to a hardware fault) is usually detected in the power-up sequence. By examining the maintenance record logged in the event recorder, the nature of the detected fault can be determined.

For more information, refer to Self-Test Errors section.

22.3.5 MAL-OPERATION DURING TESTING

22.3.5.1 FAILURE OF IED OUTPUT CONTACTS

An apparent failure of the relay output contacts can be caused by the configuration. Perform the following tests to identify the real cause of the failure. The self-tests verify that the coils of the output relay contacts have been energised. An error is displayed if there is a fault in the input/output board.

Test	Check	Action
1	Is the Out of Service LED ON?	If this LED is ON, the relay may be not programmed (out of service by setting), in test mode or the protection has been disabled due to a hardware verify error. Verify if the Device InService setting at ***SETPOINTS\DEVICE\INSTALLATION*** menu is set to Ready. Verify if the Simulation State setting at ***SETPOINTS\TESTING\SIMULATION\SETUP*** menu is set to Disabled. Verify that there is not Major Self-Test Error, this can be checked at ***TARGETS*** menu or at ***RECORDS\EVENTS*** menu
2	Examine the relay output contact status in the ***DEVICE STATUS\RELAY OUTPUTS*** menu.	The relay output contacts can be forced using the test mode of the device to check its correct operation (besides the assignation for the protection element operation).If the relay contact output status are operated, go to test 4; if not, go to test 3.
3	Examine the event recorder or the fault record or use the engineering port to check if the protection element is operating correctly.	If the protection element does not operate, check if the test is correctly applied. If the protection element operates, check the protection element settings and the Flexlogic Equation Editor to make sure the relay output contacts (Relay O/P) are correctly selected and configured.
4	Using the ***Relay Outputs*** settings per each relay output contact under the ***SETPOINTS\TESTING*** menu, apply a test pattern to the relevant relay output contacts. Take into account that to force any relay output contact status in the IED, the ***Simulation State*** setting under ***SETPOINTS \TESTING\SIMULATION\SETUP*** menu should be set to any value but Disabled and that the ***Force Relays*** setting under ***SETPOINTS\TESTING \SIMULATION\SETUP*** menu should be set to Enabled. Refer to Commissioning Test Menu section in Commissioning Instructions chapter for more information. Consult the correct external connection diagram and use a continuity tester at the rear of the relay to check the IED output contacts operate.	If the relay output contacty operates, the problem must be in the external wiring to the IED. If the output relay does not operate the output relay contacts may have failed (the self-tests verify that the relay coil is being energised). Ensure the closed resistance is not too high for the continuity tester to detect. When the tests are finished (if the testing mode has been used), ensure that all the testing settings under ***SETPOINTS\TESTING*** menu have been set to its default values.

22.3.5.2 FAILURE OF OPTO-INPUTS

The opto-isolated inputs can be mapped onto the IEDs internal signals using the Flexlogic Equation Editor. If an input is not recognised by the scheme logic, use the Opto Inputs settings per each opto-input under the ***SETPOINTS\TESTING*** menu to check whether the problem is in the opto-input itself, or the mapping of its signal to the scheme logic functions. Take into account that to use the Opto Inputs settings under the ***SETPOINT\TESTING*** menu, the Simulation State setting under the ***SETPOINTS\TESTING\SIMULATION\SETUP*** menu should be set to any value but Disabled. After testing, ensure that all the Testing settings under the ***SETPOINTS\TESTING*** menu have been set to its default values.

For more information, refer to Commissioning Test Menu section in Commissioning Instructions chapter .

If the device does not correctly read the opto-input state, test the applied signal. Verify the connections to the opto-input using the wiring diagram and the nominal voltage settings in *OPTO CONFIG*. To do this:

1. Select the nominal battery voltage for all opto-inputs by selecting one of the five standard ratings in the ***Global Nominal V*** setting in the ***SETPOINTS\INPUTS\OPTO CONFIG*** menu
2. Using a voltmeter, check that the voltage on its input terminals is greater than the minimum pickup level (See the Technical Specifications chapter for opto-input pickup levels).

If the signal is correctly applied, this indicates failure of an opto-input, in which case the complete cradle should be replaced.

22.3.5.3 INCORRECT ANALOGUE SIGNALS

If the measured analogue quantities do not seem correct, use the measurement function to determine the type of problem.

1. Compare the displayed measured values with the actual magnitudes at the terminals.
2. Check the correct terminals are used.
3. Check the CT and VT ratios set are correct.
4. Check the phase displacement to confirm the inputs are correctly connected.

22.3.6 FLEXLOGIC EQUATION EDITOR TROUBLESHOOTING

A failure to open a connection could be due to one or more of the following:

- The IED address is not valid
- Password in not valid
- Communication set-up is not correct
- Transaction values are not suitable for the IED or the type of connection
- The connection cable is not wired correctly or broken
- If any communications hardware medium converter is used, it may be incorrectly set.

22.3.7 USB PORT TROUBLESHOOTING

If it is not possible to communicate with the IED using the USB port, do the following checks to troubleshoot the issue:

- Verify the USB settings at ***DEVICE\COMMUNICATIONS\USB*** path
  - Verify that the ***USB Port*** setting is set to Enabled.
  - Verify that the ***USB IP Addr*** and ***USB Subnet Mask*** settings are set properly and match the ones being used to access to the device through the EnerVista Configuration software.

In case the USB settings would be properly set and the port enabled and the communication still not be able to be established:

- Verify that the USB cable is ok.
- If the cable is ok, verify that the USB Driver "GE RNDIS Device" is visible under Network adapters at Device Manager on your computer (Control Panel\System and Security\System, under System Tools)

22.3.8 REPAIR AND MODIFICATION PROCEDURE

Please follow these steps to return a product to us:

1. Get the Repair and Modification Return Authorization (RMA) form
   An electronic version of the RMA form is available from the following:
   contact.centre@ge.com
2. Fill in the RMA form
   Fill in only the white part of the form.
   If an RCA (root cause analysis) is required, indicate it on the RMA form.
   Please ensure that all fields marked **(M)** are completed such as:
   - Equipment model
   - Model No. and Serial No.
   - Description of failure or modification required (please be specific)
   - Value for customs (in case the product requires export)
   - Delivery and invoice addresses
   - Contact details

3. Please ensure that all required files for RMA investigation are provided:
   - CID file (setting and configuration file)
   - Event Recorder (SOE)
   - Disturbance Recorder (Waveform Capture)
   - Service Report (where available).
4. Send the RMA form to your local contact
   For a list of local service contacts worldwide, email us at:
   contact.centre@ge.com
5. The local service contact provides the shipping information
   Your local service contact provides you with all the information needed to ship the product:
   - Pricing details
   - RMA number
   - Repair centre address

     If required, an acceptance of the quote must be delivered before going to the next stage.
6. Send the product to the repair centre
   - Address the shipment to the repair centre specified by your local contact
   - Make sure all items are packaged in an anti-static bag and foam protection
   - Make sure the shipment is properly packaged, any damage during transportation may void the warranty
   - Make sure a copy of the import invoice is attached with the returned unit
   - Make sure a copy of the RMA form is attached with the returned unit
   - E-mail or fax a copy of the import invoice and airway bill document to your local contact.

CHAPTER 23

TECHNICAL SPECIFICATIONS

23.1 CHAPTER OVERVIEW

This chapter describes the technical specifications of the product.

Note:
To obtain the total operating time, i.e. from the presence of a trip condition to initiation of a trip, add 8 ms output relay time to the operate times listed below.
Metering and protection level accuracy apply at standard state conditions (25ºC, 1 atm).

This chapter contains the following sections:

Chapter Overview 533
Interfaces 534
Performance of Current Protection Functions 536
Performance of Voltage Protection Functions 541
Admittance Protection 544
Power Protection Functions 545
Performance of Frequency Protection Functions 546
Performance of Monitoring and Control Functions 548
Measurements and Recording 554
Regulatory Compliance 555
Ratings 557
Power Supply 558
Input/Output Connections 559
Environmental Conditions 562
Type Tests 563
Electromagnetic Compatibility 564
Arc Flash 567

23.2 INTERFACES

23.2.1 FRONT USB PORT

Front USB Port	
Use	For local connection to laptop for configuration purposes and firmware downloads
Connector	USB type B
Supported protocols	Modbus TCP, DNP3oE, IEC 61850-Ed2 (*)
Isolation	Isolation to PELV level
Constraints	Maximum cable length 5 m

23.2.2 REAR SERIAL PORT 1 (COM1)

Rear Serial Port 1 (COM1)	
Use	For SCADA communications (multi-drop)
Standard	RS485
Connector	General purpose pluggable terminal block, 3.5 mm screws (3 wire)
Cable	Screened twisted pair (STP)
Supported protocols	Modbus, IEC 60870-5-103, DNP3.0
Isolation	Isolation to PELV level
Constraints	Maximum cable length 1000 m
* Hardware selection is Cortec dependent. See ordering options for more details.	

23.2.3 REAR SERIAL PORT 2 (COM2)

Optional Rear Serial Port 2 (COM2) *	
Use	For SCADA communications (multi-drop)
Standard	RS485
Connector	General purpose pluggable terminal block, 3.5 mm screws (3 wire)
Cable	Screened twisted pair (STP)
Supported protocols	Modbus, IEC 60870-5-103, DNP3.0
Isolation	Isolation to PELV level
Constraints	Maximum cable length 1000 m
* Hardware selection is Cortec dependent. See ordering options for more details.	

23.2.4 IRIG-B PORT (SHARED WITH REAR SERIAL PORT COM1)

IRIG-B Interface (De-modulated)	
Use	External clock synchronization signal
Standard	IRIG 200-98 format B00X
Connector	Rear serial port 1
Cable type	Screened twisted pair (STP)

IRIG-B Interface (De-modulated)	
Accuracy	< ±1 s per day

23.2.5 REAR ETHERNET PORTS COPPER (ETH1, ETH2, ETH3)

Rear Ethernet Ports Using CAT 5/6/7 Wiring *	
Use	Substation Ethernet communications/engineering port
Communication protocol	10BaseT/100BaseTX
Connector	RJ45
Cable type	Screened twisted pair (STP)
Isolation	1 kV
Supported Protocols	Modbus TCP, IEC 60870-5-104, DNP3oE, IEC 61850-Ed2
Constraints	Maximum cable length 100 m
* Hardware selection and communication protocols supported for each IED are Cortec dependent. See ordering options for more details.	

23.2.6 REAR ETHERNET PORTS FIBRE (ETH1, ETH2, ETH3)

Rear Ethernet Ports Using CAT 5/6/7 Wiring *	
Use	Substation Ethernet communications/engineering port
Communication protocol	10BaseT/100BaseTX
Connector	RJ45
Cable type	Screened twisted pair (STP)
Isolation	1 kV
Supported Protocols	Modbus TCP, IEC 60870-5-104, DNP3oE, IEC 61850-Ed2
Constraints	Maximum cable length 100 m
* Hardware selection and communication protocols supported for each IED are Cortec dependent. See ordering options for more details.	

23.3 PERFORMANCE OF CURRENT PROTECTION FUNCTIONS

23.3.1 THREE-PHASE OVERCURRENT PROTECTION (DIRECTIONAL/NON-DIRECTIONAL)

Level accuracy	For 0.1 to 2.0 x CT: ±0.5% of reading or ±0.4% of rated (whichever is greater) For > 2.0 x CT: ±1.5% of reading > 2.0 x CT rating
Dropoff (IDMT and DT)	96 to 99% of pickup
Curve timing accuracy	Currents > 1.03 to 20 x pickup: ±3% of operate time or ±1 cycle (whichever is greater) from pickup to operate
DT operate	< 12 ms at 2 × pickup at 60 Hz < 15 ms at 2 x pickup at 50 Hz
DT timer accuracy	±2% of operate time or ±½ cycle (whichever is greater)½
DT reset	Setting ±5%
Disengagement	< 40 ms
Repeatability	±2.5%

23.3.1.1 THREE-PHASE OVERCURRENT DIRECTIONAL PARAMETERS

Directional boundary accuracy (RCA ±90%) angle accuracy	±2° for I > 0.050 x CT ±5° for I < 0.050 x CT

23.3.2 EARTH FAULT PROTECTION (DIRECTIONAL/NON-DIRECTIONAL)

Measured and Derived	
Level accuracy	For 0.1 to 2.0 x CT, ±0.5% of reading or ±0.4% of rated (whichever is greater) For > 2.0 x CT, ±1.5% of reading > 2.0 x CT rating
Dropoff (IDMT and DT) for EF1	96 to 99% of pickup
Dropoff (IDMT and DT) for EF2	96 to 99% of pickup
IDMT operate (curve timing accuracy)	Currents > 1.03 to 20 x pickup: ±3% of operate time or ±1 cycle (whichever is greater) from pickup to operate
DT operate (EF 1)	< 12 ms, for > 2 × pickup at 60 Hz < 15 ms, for > 2 × pickup at 50 Hz
DT operate (EF 2)	< 12 ms, for > 2 × pickup at 60 Hz < 15 ms, for > 2 × pickup at 50 Hz
DT timer accuracy	±2% of operate time or ±½ cycle (whichever is greater)
DT reset	Setting ±5%
Repeatability	±2.5%

23.3.2.1 EARTH FAULT DIRECTIONAL PARAMETERS

Derived	
Directional boundary pickup (RCA ±90°) angle accuracy	±2° for Ig > 0.050 x CT ±5° for Ig < 0.050 x CT

23.3.3 SENSITIVE EARTH FAULT PROTECTION (NON-DIRECTIONAL)

Operating Parameter:	Isg (Fundamental Phasor Magnitude) Isg cos(Phi) Isg sin(Phi)
Pickup Level (SEF CT Sec'y = 1A):	0.00100 to 3.00000 in steps of 0.00025 x CT
Pickup Level (SEF CT Sec'y = 5A):	0.00100 to 0.60000 in steps of 0.00025 x CT
Level Accuracy:	±3% of reading or ±0.5% of rated (whichever is greater)
Dropoff (IDMT and DT):	96 to 99% of pickup
IDMT Operate (curve timing accuracy):	>1.03 to 20 x pickup: ±3% of operate time or ±1 cycle (whichever is greater) from pickup to operate
DT Operate:	< 12 ms, for > 2 × pickup at 60 Hz < 15 ms, for > 2 × pickup at 50 Hz
DT Timer Accuracy:	±3% of operate time or ±1 cycle (whichever is greater)
DT Reset:	Setting ±5%
Disengagement:	< 40 ms
Repeatability:	±5%

ISEF>[X] Options	
Default:	Isg (Fundamental Phasor Magnitude) Isg cos(Phi) Isg sin(Phi)
Range:	Isg (Fundamental Phasor Magnitude) Isg cos(Phi) Isg sin(Phi)
This setting specifies the operating quantity used by the element. Isg - the element picks up when the phasor magnitude of the residual ground current (Isg) is above the pickup level. Isg cos(Phi) - the element picks up when the active (real) component of the residual ground current is above the PKP level. The angle Phi is the angle difference between Isg and Vn. Isg sin(Phi) - the element picks up when the reactive (imaginary) component of the residual ground current is above the PKP level.	

23.3.3.1 SEF DIRECTIONAL PARAMETERS

Angle accuracy	±2° for Ig > 0.050 x CT ±5° for Ig < 0.050 x CT

23.3.4 RESTRICTED EARTH FAULT PROTECTION

High/Low Impedance Restricted Earth Fault (REF) Accuracy	
Pickup	0.050 to 30.000 x CT in steps of 0.001 x CT (phase CT)
Level accuracy	For 0.1 to 2.0 x CT: ±0.5% of reading or ±0.4% of rated (whichever is greater) For > 2.0 x CT: ±1.5% of reading
Dropoff	96 to 99% of pickup
Operating time	< 25 ms at 1.1 × slope x Imax at 60 Hz < 30 ms at 1.1 × slope x Imax at 50 Hz
High pickup	Setting ±5%
Timer accuracy	±3% of delay setting or ±½ cycle (whichever is greater) from pickup to operate
Repeatability	< 15%

23.3.5 NEGATIVE SEQUENCE OVERCURRENT PROTECTION (DIRECTIONAL/ NON-DIRECTIONAL)

Pickup level	0.020 to 30.000 in steps of 0.001 x CT
Level accuracy	For 0.1 to 2.0 x CT, ±0.5% of reading or ±0.4% of rated (whichever is greater) For > 2.0 x CT, ±1.5% of reading > 2.0 x CT rating
Dropoff (IDMT and DT)	96 to 99% of pickup
IDMT operate (curve timing accuracy)	Currents > 1.03 to 20 x pickup: ±3% of operate time or ±1 cycle (whichever is greater) from pickup to operate
DT operate	< 12 ms, for > 2 × pickup at 60 Hz < 15 ms, for > 2 × pickup at 50 Hz
DT reset	Setting ±5%
DT timer accuracy	±3% of operate time or ±½ cycle (whichever is greater)
Disengagement	< 40 ms

23.3.5.1 DIRECTIONAL PARAMETERS

Directional boundary pickup (RCA ±90°) angle accuracy	±2° for Ig > 0.050 x CT ±5° for Ig < 0.050 x CT

23.3.6 BROKEN CONDUCTOR PROTECTION

Pickup level	10.0% to 100.0% in steps of 0.1%
Level accuracy	From 0.05 to 2.0 x CT: ±1% of reading or ±2% of rated (whichever is greater) For > 2.0 x CT: ±2% of reading
Dropoff	96 to 99 % of pickup level
DT operate	< 2.5 cycles
DT timer accuracy	±3% of delay setting or ±¾ cycle (whichever is greater) from pickup to operate

23.3.7 THERMAL OVERLOAD PROTECTION

Current level accuracy	For 0.1 to 2.0 x CT: ±0.5% of reading or ±0.4% of rated (whichever is greater) For > 2.0 x CT: ±1.5% of reading
Operate time	< 30 ms at 60Hz (from 0 to 120 x pickup) < 36 ms at 50Hz (from 0 to 120 x pickup)
Thermal alarm pickup	Calculated trip time ±10%
Thermal overload pickup	Calculated trip time ±10%
Cooling time accuracy	±15% of theoretical

23.3.8 UNDERCURRENT

Pickup level	0.05 to 0.95 x CT in steps of 0.01 x CT
Level accuracy	For 0.05 to 2.0 x CT: ±0.5% of reading or ±0.4% of rated (whichever is greater)
DT timer accuracy	±3% of delay setting or ±2 power cycles (whichever is greater) from pickup to operate
DT operate	< 45 ms at 60 Hz < 50 ms at 50 Hz
Dropoff	101% to 104% of pickup

23.3.9 SWITCH ON TO FAULT

Level accuracy	For 0.1 to 2.0 x CT rating: ±0.5% of reading or ±1% of rated (whichever is greater)
Timer accuracy	For > 2.0 x CT rating: ±1.5% of reading ±3% or ±35ms (whichever is greater)
Operate time	< 16 ms, for > 2 × pickup at 60 Hz < 19 ms, for > 2 × pickup at 50 Hz

23.3.10 LOAD BLINDER

Operating parameter	Positive sequence V and Ω
Reach (in secondary Ω)	0.02 to 250.00 Ω in steps of 0.01 Ω
Angle	5 to 85° in steps of 1°
Minimum voltage	0.00 to 3.00 x VT in steps of 0.01 x VT
Impedance accuracy	±5%
Angle accuracy	±2°
Pickup time delay	0.000 to 6000.00 s in steps of 0.001 s
Dropoff time delay	0.000 to 6000.00 s in steps of 0.001 s
Operate time	< 20 ms at 1.1 × pickup at 60Hz < 24 ms at 1.1 × pickup at 50Hz
Timer accuracy	±3% of delay setting or ±¼ cycle (whichever is greater) from pickup to operate

23.3.11 CIRCUIT BREAKER CONTROL

Pickup	For 0.1 to 2.0 x CT: ±0.5% of reading or ±0.4% of rated (whichever is greater) For > 2.0 x CT: ±1.5% of reading
Dropoff	96 to 99% of pickup
Timers	±3% or 1 cycle (whichever is greater) from pickup to operate

23.4 PERFORMANCE OF VOLTAGE PROTECTION FUNCTIONS

23.4.1 UNDERVOLTAGE PROTECTION

Pickup level	0.00 to 1.50 (VT) in steps of 0.01 VT
Level accuracy (IDMT and DT)	±0.5% of reading or 0.3 V (whichever is greater) from 10 to 240 V
Dropoff (IDMT and DT)	103 to 105% of pickup or 101 to 103% of pickup (**)
Operate time	< 25 ms at 2 x pickup at 60Hz < 30 ms at 2 x pickup at 50Hz
Timer accuracy	< 0.8 x pickup, ±3% of operate time or 1 cycle (whichever is greater)
Disengagement	< 40 ms
Repeatability	±1%

23.4.2 TIME UNDERVOLTAGE PROTECTION

Operating parameter	VA, VB, VC/ or /VAB, VBC, VCA/ (Phasor)
Minimum voltage	0.00 to 1.50 (VT) in steps of 0.01 VT
Pickup level	0.00 to 1.50 (VT) in steps of 0.01 VT
Dropoff	102.0% to 150.0% of PKP in steps of 0.1% of PKP
Level accuracy	±0.5% of reading from 10 to 240 V
Curve limit	0.00 to 1.50 (VT) in steps of 0.01 VT
Curve time	0.000 - 600000.000 s in steps of 0.001s
Dropoff time delay	0.000 - 600000.000 s in steps of 0.001s
Curve timing accuracy	At < 0.90 x pickup: ±3.5% of operate time or ±½ cycle (whichever is greater) from pickup to operate

23.4.3 UV VAR POWER PROTECTION

Pickup level	0.00 to 1.50 x VT in steps of 0.01
Pickup Vars range	1 to 65000 Kvar in steps of 1 Kvar
Pickup time delay range	0.100 to 600.000 s in steps of 0.001
Level accuracy	±0.5% of reading or ±2V (secondary), whichever is greater
Dropoff	103% of pickup for Undervoltage 97% of pickup for Over Reactive Power 103% of pickup for Under Reactive Power
Timer accuracy	±3% of the delay setting time or ±½ cycle (whichever is greater)

23.4.4 OVERVOLTAGE PROTECTION

Pickup level	0.02 to 3.00 (VT) in steps of 0.01 VT

Level accuracy (IDMT and DT)	±0.5% of reading or 0.3 V (whichever is greater) from 10 to 240 V
Dropoff (IDMT and DT)	95 to 97% of pickup or 97 to 99% of Pickup (*)
Operate time	< 25 ms at 2 x pickup at 60Hz < 30 ms at 2 x pickup at 50Hz
Timer accuracy	<0.8 x pickup, ±3% of operate time or 1 cycle (whichever is greater)
DT reset	Setting ±5%
Disengagement	< 40 ms
(*) The dropoff voltage range is selectable under the Setpoints\Device\Installation\OV/UV DPO Range	

23.4.5 RESIDUAL OVERVOLTAGE PROTECTION

Pickup	±0.5% of reading or 0.3 V (whichever is greater) from 10 to 240 V
Dropoff (IDMT and DT)	96 to 99% of pickup
Operate time	< 25 ms at 2 x pickup at 60Hz < 30 ms at 2 x pickup at 50Hz
Timer accuracy	> 1.2 x pickup, ±3% of operate time or 1 cycle (whichever is greater)
DT reset	Setting ±5%
Disengagement	< 40 ms

23.4.6 POSITIVE SEQUENCE VOLTAGE PROTECTION

Accuracy	
Pick up level	0.00 to 3.00 (VT) in steps of 0.01 x VT
Level accuracy	±1% of reading or 0.3 V (whichever is greater) from 10 to 208 V
Dropoff (OV)	96 to 99% of pickup
Dropoff (UV)	101 to 104% of pickup
Operate time	< 25 ms at 2 x pickup at 60Hz < 30 ms at 2 x pickup at 50Hz
Timer accuracy (OV)	> 1.2 x pickup, ±3% of operate time or 1 cycle (whichever is greater)
Timer accuracy (UV)	< 0.8 x pickup, ±3% of operate time or 1 cycle (whichever is greater)

23.4.7 NEGATIVE SEQUENCE VOLTAGE PROTECTION

Accuracy	
Pickup level	0.00 to 3.00 (VT) in steps of 0.01 x VT
Level accuracy	±1% of reading or 0.3 V (whichever is greater) from 10 to 208 V
Dropoff	95 to 97% of pickup or 97 to 99% of pickup (*)
Operate time	< 25 ms at 2 x pickup at 60Hz < 30 ms at 2 x pickup at 50Hz
Timer accuracy	> 1.2 x pickup, ±3% of operate time or 1 cycle (whichever is greater)
Disengagement	< 35 ms
Repeatability	< 10%

Accuracy
(*) The dropoff voltage range is selectable under the Setpoints\Device\Installation\OV/UV DPO Range

23.4.8 VOLTS PER HERTZ

Pickup level	0.80 to 4.00 in steps of 0.01 x V/Hz
Dropoff	97 to 98% of pickup
Level accuracy	±0.02
TD multiplier	0.05 to 600.00 s in steps of 0.01
Reset delay	0.00 to 6000.00 s in steps of 0.01
Timer accuracy	±3% of operate time or ±15 cycles (whichever is greater) for values greater than 1.1 × pickup
Operate time	< 2 cycles

23.4.9 MOVING AVERAGE OVERVOLTAGE PROTECTION

Pickup level	Setting ±5%
Dropoff	0.98 x setting ±5%
Operate time	±2% or 50 ms, whichever is greater
Timer accuracy	1.2 x pickup, ±3% of operate time or 1 cycle (whichever is greater)
Disengagement	< 50 ms
Repeatability	±1%

23.5 ADMITTANCE PROTECTION

23.5.1 NEUTRAL ADMITTANCE

Mode	Admittance, Conductance and Susceptance
Reach admittance (secondary Siemens)	0.00 to 500.00 mS in steps of 0.01
Reach Conductance/Susceptance (secondary Siemens)	-500.00 to 500.00 mS in steps of 0.01
Level accuracy	±1% of Pickup or ±0.01 mS, whichever is greater
Pickup delay range	0.000 to 600.000 s in steps of 0.001
Dropoff delay range	0.000 to 600.000 s in steps of 0.001
Timer accuracy	±3% of delay setting time or ±20 mS, whichever is greater
Pickup time	< 35 msec
	Minimum Current Supervision
Pickup level	0.02 to 1.00 x CT in steps of 0.01
Dropoff	103% of pickup
	Minimum Voltage Supervision
Pickup level	0.01 to 1.50 x VT in steps of 0.01
Dropoff	Dropoff: 103% of pickup

23.6 POWER PROTECTION FUNCTIONS

23.6.1 OVERPOWER/UNDERPOWER PROTECTION

Pickup level	0.000 to 1.200 x Rated Power in steps of 0.001
Level accuracy	±1.5% or ±0.005 x Rated Power (whichever is greater)
Hysteresis	2% or 0.001 x Rated Power (whichever is greater)
Operate time	< 50 ms at 1.1 x pickup at 60 Hz < 60 ms at 1.1 x pickup at 50 Hz
Timer accuracy	±2% or 50ms (whichever is greater)
tRESET	±5%
Disengagement time	< 50 ms

23.6.2 WATTMETRIC GROUND FAULT

Characteristic angle	0 to 359° in steps of 1°
Pickup level	0.001 to 1.200 C Tx VT in steps of 0.001
Level accuracy	±1% or ±0.0025 CT x VT, whichever is greater
Hysteresis	3% or 0.001 CT x VT, whichever is greater
Pickup delay	Definite time, inverse time, or FlexCurve
Operating voltage pickup level	0.02 to 3.00 x VT in steps of 0.01 x VT
Operating voltage dropoff level	96 to 99% of voltage pickup
Operating current pickup level	0.002 to 30.000 x CT in steps of 0.001 x CT
Operating current dropoff level	96 to 99% of current pickup
Operating current pickup delay	0.000 to 6000.000 s in steps of 0.001 s
Inverse time multiplier	0.01 to 2.00 s in steps of 0.01 s
Operate time	< 42 ms at 1.1 x pickup at 60 Hz < 50 ms at 1.1 x pickup at 50 Hz
Curve timing accuracy	±3% of curve delay or ±¾ cycle (whichever is greater) from pickup to operate

23.7 PERFORMANCE OF FREQUENCY PROTECTION FUNCTIONS

23.7.1 OVERFREQUENCY PROTECTION

Pickup Level	
Normal frequency input	20.00 to 65.00 Hz in steps of 0.01
High-speed freq input	40.00 to 65.00 Hz in steps of 0.01
Level Accuracy	
Normal frequency input	Setting ±0.01 Hz (frequency between 40 to 70Hz)
High-speed freq input	Input: ±0.02 Hz (frequency between 40 to 70Hz)
Dropoff	Pickup - 0.03 Hz
Timer Accuracy	
Normal frequency input	±2% of delay setting or ±50 ms (whichever is greater) from pickup to operate
High-speed freq input	±2% of delay setting or ±50 ms (whichever is greater)
Operating and Reset Time	
Operating time (0.1 Hz/s change)	Typically 7.5 cycles
Operating time (0.3 Hz/s change)	Typically 7.0 cycles
Operating time (0.5 Hz/s change)	Typically 6.5 cycles

Typical times are average operate times including variables such as frequency change instance, test method, etc., and may vary by ±0.5 cycles.

23.7.2 UNDERFREQUENCY PROTECTION

Pickup Level	
Normal frequency input	15.00 to 65.00 Hz in steps of 0.01
High-speed freq input	40.00 to 65.00 Hz in steps of 0.01
Level Accuracy	
Normal frequency input	±0.01 Hz (frequency between 40 to 70Hz)
High-speed freq input	±0.02 Hz (frequency between 40 to 70Hz)
Dropoff	Pickup + 0.03 Hz
Timer Accuracy	
Normal frequency input	±2% of delay setting or ±50 ms (whichever is greater) from pickup to operate
High-speed freq input	±2% of delay setting or ±50 ms (whichever is greater)
Operating and Reset Time	
Operating time (0.1 Hz/s change)	Typically 7.5 cycles
Operating time (0.3 Hz/s change)	Typically 7.0 cycles
Operating time (0.5 Hz/s change)	Typically 6.5 cycles

23.7.3 FAST UNDERFREQUENCY

Operating parameter	Frequency and rate of change of frequency
UF pickup level	20.00 to 65.00 Hz in steps of 0.01
df/dt pickup level	-10.00 to -0.10 Hz/s in steps of 0.01 Hz/s
Pickup time delay	0.000 - 6000.000 s in steps of 0.001s
Dropoff time delay	0.000 - 6000.000 s in steps of 0.001s
Frequency accuracy	250 mHz/s or 3.5% (whichever is greater)
Timer accuracy	±3% of operate time or ±¼ cycle (whichever is greater)

23.7.4 FREQUENCY RATE OF CHANGE PROTECTION

Accuracy	
Pickup level	0.10 to 15.00 Hz/s in steps of 0.01
Level accuracy (df/dt)	80 mHz/s or 3.5% (whichever is greater)
Dropoff	96% of pickup level
Operating and Reset Time	
Operating time	Typically 10 cycles at 2 x pickup Typically 9 cycles at 3 × pickup Typically 8 cycles at 5 × pickup
Timer accuracy	±2% of delay setting or ±50 ms (whichever is greater) from pickup to operate
95% settling time for df/dt	< 24 cycles

23.8 PERFORMANCE OF MONITORING AND CONTROL FUNCTIONS

23.8.1 CURRENT TRANSFORMER SUPERVISION

3I0 pickup level	0.050 to 30.000 x CT in steps of 0.001 x CT (phase CT)
IG pickup level	0.050 to 30.000 x CT in steps of 0.001 x CT (ground CT)
3V0 pickup level	0.02 to 3.00 x VT in steps of 0.01 x VT (phase VT)
CTS diff. pickup level	0.050 to 30.000 x CT in steps of 0.001 x CT
Slope range	0 to 100% in steps of 1%
Quotient pickup level	0.00 to 1.00 (Imin/Imax)
Dropoff	97 to 98% of Pickup
Level accuracy	For 0.1 to 2 x CT: ±0.5% of reading or ±0.4% of rated (whichever is greater) For > 2 x CT: ±1.5% of reading
Operate time	< 12 ms typical at 3 x pickup at 60 Hz < 15 ms typical at 3 x pickup at 50 Hz
Timer accuracy	±3 % delay setting or ±¼ cycle (whichever is greater) from pickup to operate
CTS reset	< 40 ms

23.8.2 VOLTAGE TRANSFORMER SUPERVISION

Fast block operation	< 25 ms
Fast block reset	< 40 ms
Time delay	±2% or 40 ms, whichever is greater

23.8.3 POLE DEAD

Current Threshold Accuracy	
Pickup level	±5%
Dropoff	±5%
Voltage Threshold Accuracy	
Pickup level	±5%
Dropoff	±5%

23.8.4 CB STATE AND CONDITION MONITORING

Timers	±40 ms or 2% (whichever is greater)

23.8.5 FLEXLOGIC EQUATION EDITOR TIMERS

Output conditioner timer	Setting ±2% or 50 ms, whichever is greater

Dwell conditioner timer	Setting ±2% or 50 ms, whichever is greater
Pulse conditioner timer	Setting ±2% or 50 ms, whichever is greater

23.8.6 DC SUPPLY MONITOR

Measuring range	19 V to 300 V
Tolerance	±5% or 1.5V (whichever is greater)
Pickup	100% of Setting ± Tolerance *
Dropoff	Hysteresis 2% 102% of Setting ± Tolerance for the upper limit * 98% of Setting ± Tolerance for the lower limit *
Operate time	Setting ±2% or 500 ms (whichever is greater)
Disengagement time	< 250 ms
* Tested at 21°C	

23.8.7 POLE DISCREPANCY

Level accuracy (current)	0.1 < I < 2.0 x CT: ±0.5% of reading or ±0.4% of rated (whichever is greater) I > 2.0 x CT: ±1.5% of reading
Dropoff level	96 to 99% of current limit
Timer accuracy	±3% of operate time or ±1 cycle (whichever is greater)

23.8.8 CHECK SYNC

Phase angle pickup	(Setting -2°) ±1°
Phase angle dropoff	(Setting -1°) ±1°
Slip frequency pickup	±0.01 Hz
Slip frequency dropoff	(0.95 x Setting) ±0.01 Hz

23.8.9 POWER FACTOR

Switch-in level	0.01 Lead to 1 to 0.01 Lag in steps of 0.01
Switch-out level	0.01 Lead to 1 to 0.01 Lag in steps of 0.01
Delay	0.000 to 6000.000 s in steps of 0.001 s
Minimum operating voltage	0.00 to 1.25 x VT in steps of 0.01 x VT
Level accuracy	±0.02
Timer accuracy	±3% of delay setting or ±1¼ cycle (whichever is greater) from pickup to operate

23.8.10 BREAKER ARCING CURRENT

Alarm level	0 to 50000 kA2-cycle in steps of 1 kA2-cycle
Timer accuracy	±3% of delay setting or ±1 cycle (whichever is greater) from pickup to operate
Timers	±40 ms or 2%, whichever is greater

23.8.11 CB HEALTH

Timers accuracy	±160 ms or 3%, whichever is greater

23.8.12 UNDERFREQUENCY RESTORATION

Minimum voltage level	0.000 to 1.250 × VT in steps of 0.001 x VT
Minimum frequency level	20.00 to 65.00 Hz in steps of 0.01 Hz
Time delay	0 to 6000.000 s in steps of 0.001
Incomplete sequence timer	1 to 10000 min. in steps of 1
Level accuracy	±0.5% of reading from 10 to 208 V
Timer accuracy	±3% of delay setting or ±¼ cycle (whichever is greater) from pickup to operate

23.8.13 HARMONIC DETECTION

Operating parameter	Current 2nd, 3rd, 4th, 5th harmonic or THD per phase
Timer accuracy	Harmonic: ±3% of delay setting or ±¼ cycle (whichever is greater) from pickup to operate THD: ±3% of delay setting or ±3 cycle (whichever is greater) from pickup to operate
Operating time	Less than 1½ cycles

23.8.14 POWER QUALITY

23.8.14.1 VOLTAGE DISTURBANCE

Voltage Swell	
Pickup level	0.02 to 3.00 x VT in steps of 0.01
Dropoff	97 to 98% of Pickup
Pickup delay	0.000 to 6000.000 s in steps of 0.001s (definite time)
Operate time	< 25 ms at 1.1 x pickup at 60Hz < 30 ms at 1.1 x pickup at 50Hz
Timing accuracy	±0.5% of delay setting or ±¼ power cycles (whichever is greater) from pickup to operate
Voltage Sag	

Voltage Swell	
Pickup level	0.00 to 1.50 x VT in steps of 0.01
Dropoff	102 to 103% of Pickup
Level accuracy	±0.5% of reading from 10 to 208 V
Pickup delay	0.000 to 6000.000 s in steps of 0.001s (definite time)
Operate time	< 20 ms at 0.90 x pickup at 60 Hz < 25 ms at 0.90 x pickup at 50 Hz

23.8.14.2 VOLTAGE INTERRUPTION

Minimum voltage	0.00 to 1.50 X VT in steps of 0.01 x VT
Pickup level	0.00 to 1.50 X VT in steps of 0.01 x VT
Dropoff	101 to 104% of pickup

23.8.15 COLD LOAD PICKUP PROTECTION

Pickup level	0.000 to 30.000 x CT in steps of 0.001 x CT
Dropoff	0.05 x CT fixed
Timer accuracy	±3% of delay setting or ±¼ cycle (whichever is greater) from pickup to operate

23.8.16 AUTORECLOSE

Reclose attempts	Up to four (4) before lockout
Timer accuracy	±3% of delay setting or ±¼ cycle (whichever is greater) from pickup to operate

23.8.17 CIRCUIT BREAKER FAIL

Pickup level	0.001 to 30.000 x CT in steps of 0.001 x CT
Level accuracy	For 0.1 to 2.0 x CT: ±0.5% of reading or ±0.4% of rated (whichever is greater) For > 2.0 x CT: ±1.5% of reading
Dropoff	96 to 99% of pickup
Timer accuracy	±3% or 1 cycle (whichever is greater) from pickup to operate

23.8.18 FLEX LOGIC TIMERS

Output conditioner timer	Setting ±2% or 50 ms, whichever is greater
Dwell conditioner timer	Setting ±2% or 50 ms, whichever is greater
Pulse conditioner timer	Setting ±2% or 50 ms, whichever is greater

23.8.19 FLEX LOGIC TIMERS

HiZ/HiF Detection	
HiZ/HiF method	Neutral (calculated/derived)/Residual (measured) Current Based (HiZ IN)
Neutral/residual detection rules	RMS OC, Deviation RMS, Delta Energy, Relative Wav Rand, Harm Ph Angle, Harm AND Energy
Neutral/residual method input signals	In (derived) or ISEF (measured); Vn (derived), for directional supervision)
Typical neutral/residual detection interval	Adaptive between 2 to few cycles

23.8.20 TRIP BUS (TRIP WITHOUT FLEXLOGIC)

Trip Bus	
Number of elements:	6
Number of inputs	16
Pickup time delay:	0.000 to 6000.000 s in steps of 0.001 s
Dropout time delay:	0.000 to 6000.000 s in steps of 0.001 s
Operate time:	< 2 ms at 60 Hz
Timer accuracy	±3% of delay time or ±¼ cycle (whichever is greater) from pickup to operate

1 to 16	
Default:	Off
Range:	Off Any operand from the list of FlexLogic operands

Latching	
Default:	Disabled
Range:	Enabled Disabled

Latching	
Default:	Disabled
Range:	Enabled Disabled

Reset	
Default:	Off
Range:	Off Any operand from the list of FlexLogic operands

Pickup Delay	
Default:	0.000 s
Range:	0.000 to 6000.000 s
Step:	0.001 s

Dropout Delay	
Default:	0.000 s
Range:	0.000 to 6000.000 s
Step:	0.001 s

Inhibit	
Default:	Off
Range:	Off Any operand from the list of FlexLogic operands

Rly OP[Y]	
Default:	Do Not Operate
Range:	Do Not Operate Operate

Note:
Y - represents the number of relay outputs in the respective product, being Cortec dependent.

Events	
Default:	Enabled
Range:	Disabled Enabled

Targets	
Default:	Self-reset
Range:	Disabled Self-Reset Latched

23.8.21 DIGITAL ELEMENTS

Digital Elements	
Number of elements:	64
Operating signal:	Any FlexLogic operand
Operate time:	Digital Elements are processed once per cycle (16 ms at 60 Hz, 20 ms at 50 Hz)
Pickup delay:	0.000 to 6000.000 s in steps of 0.001 s
Dropout delay:	0.000 to 6000.000 s in steps of 0.001 s
Timer accuracy	±3% of delay setting or ±¼ cycle (whichever is greater) from pickup to operate

23.9 MEASUREMENTS AND RECORDING

23.9.1 METERING

Parameter	Range		% Tolerance	ABS Tolerance
	Low	High		
Current mag (measured)	0.05 x In	2 x In	0,50%	0.002 x In
	2 x In	30 x In	1,00%	---
Sens current mag (measured)	0.002 x In	0.2 x In	0,50%	0.001 x In
	0.2 x In	3 x In (if CT sec = 1 A) 0.6 x In (if CT sec = 5 A)	1,00%	---
Voltage mag (measured)	10 V	300 V	0,5%	0.3 V
Current mag (derived)	0.05 x In	30 x In	2%	2% Rated
Voltage mag (derived)	10 V	300 V	2%	2% Rated
Current ang	0.05 x In	30 x In	---	1º
Voltage ang	10 V	300 V	---	1º
Frequency	40 Hz	70 Hz	---	0.01Hz
Real power (watts)	-0.8 < PF ≤ -1.0 and 0.8 < PF < 1.0		±1.5% of reading	0.005 * rated kW
Reactive power (Vars)	-0.2 < PF ≤ 0.2		±1.5% of reading	0.005 * rated kVAr

23.9.2 DISTURBANCE RECORDS

Disturbance Records Measurement Accuracy	
Number of records	1 to 16
Sampling rate (samples/cycle)	128\64\32\16\8
Magnitude and relative phases accuracy	±5% of applied quantities
Trigger position accuracy	±2%

23.9.3 EVENT AND FAULT RECORDS

Event & Fault Records	
Record location	Flash memory
Viewing method	Front panel display or EnerVista Configuration
Extraction method	Extracted via the USB or Ethernet port
Number of event records	Up to 2048 time tagged event records
Number of fault records	Up to 25

23.9.4 FAULT LOCATOR (FAULT RECORDS)

Accuracy	
Fault location	±3.5% of line length up to SIR 30 Reference conditions: solid fault applied on line
Method	Single-ended

23.10 REGULATORY COMPLIANCE

Compliance with the European Commission Direction on EMC, LVD and RoHS is via the self certification route.

CE

23.10.1 EMC COMPLIANCE: 2014/30/EU

The product specific Declaration of Conformity (DoC) lists the relevant harmonised standard(s) or conformity assessment used to demonstrate compliance with the EMC directive.

23.10.2 EMC COMPLIANCE: 2574-14 OF RAMADAN 1436

The product specific Declaration of Conformity (DoC) lists the relevant harmonised standard(s) or conformity assessment used to demonstrate compliance with the EMC directive.

23.10.3 LVD COMPLIANCE: 2014/35/EU

The product specific Declaration of Conformity (DoC) lists the relevant harmonized standard(s) or conformity assessment used to demonstrate compliance with the LVD directive.

Safety related information, such as the installation I overvoltage category, pollution degree and operating temperature ranges are specified in the Technical Data section of the relevant product documentation and/or on the product labelling.

Unless otherwise stated in the Technical Data section of the relevant product documentation, the equipment is intended for indoor use only. Where the equipment is required for use in an outdoor location, it must be mounted in a specific cabinet or housing to provide the equipment with the appropriate level of protection from the expected outdoor environment.

23.10.4 LVD COMPLIANCE: 2573-14 OF RAMADAN 1436

The product specific Declaration of Conformity (DoC) lists the relevant harmonized standard(s) or conformity assessment used to demonstrate compliance with the LVD directive.

23.10.5 ROHS COMPLIANCE 2011/65/EU AND (EU) 2015/863

The product complies with the directive of the Council of the European Communities on harmonization of the laws of the Member States concerning restriction on usage of hazardous substances in electrical and electronic equipment (RoHS Directive 2011/65/EU). This conformity has been proved by tests performed according to the Council Directive in accordance with the standard EN 50581.

23.10.6 MECHANICAL SPECIFICATIONS

23.10.6.1 PHYSICAL PARAMETERS

Physical Measurements	
Case types	20TE
Weight (20TE case)	1.5 kg - 2 kg (depending on configuration options)
Dimensions in mm (w x h x l) (20TE case)	W: 102.4 mm H: 177.0 mm D: 185.6 mm

Physical Measurements	
Mounting	Panel, rack

Physical Measurements	
Case types	30TE
Weight (30TE case)	1.5 kg - 2.75 kg (depending on configuration options)
Dimensions in mm (w x h x l) (30TE case)	W: 154.2 mm H: 177.0 mm D: 185.6mm
Mounting	Panel, rack

23.10.6.2 ENCLOSURE PROTECTION

Against dust and dripping water (front face)	IP52 (20TE), IP54 (30TE) as per IEC 60529:2013
Protection for rear of the case	IP20 as per IEC 60529:2013
Noise	0 dB

Caution:
To maintain IP20 protection, the rear cover must be re-installed as per the provided instructions after wiring is complete.

23.10.6.3 MECHANICAL ROBUSTNESS

Vibration test per EN 60255-21-1:1988	Response: class 2, Endurance: class2
Shock and bump immunity per EN 60255-21-2:1988	Shock response: class 2, Shock withstand: class 1, Bump withstand: class 1
Seismic test per EN 60255-21-3: 1995	Class 2

23.10.6.4 TRANSIT PACKAGING PERFORMANCE

Primary packaging carton protection	ISTA 1C
Compression test	1.4 x Calculated force
Vibration tests	4 Orientations, Random frequency, 22.45mm amplitude, 1.15 G
Shock test	10 drops from 760mm on multiple carton faces, edges and corners

23.11 RATINGS

23.11.1 AC MEASURING INPUTS

AC Measuring Inputs	
Nominal frequency	50 Hz or 60 Hz (settable)
Operating range	40 Hz to 70 Hz
Phase rotation	ABC or ACB

23.11.2 CURRENT TRANSFORMER INPUTS

AC Current	
Nominal current (In)	1 A and 5 A dual rated*
Nominal burden per phase	< 0.05 VA at In
AC current thermal withstand	Continuous: 4 x In 10 s: 30 x In 1 s: 100 x In Linear to 40 x In (non-offset ac current)

Note:
A single input is used for both 1 A and 5 A applications. 1 A or 5 A operation is determined by means of software in the product's database.

Note:
These specifications are applicable to all CTs.

23.11.3 VOLTAGE TRANSFORMER INPUTS

AC Voltage	
Nominal voltage	100 V to 120 V
Nominal burden per phase	< 0.1 VA at Vn
Thermal withstand	Continuous: 4 x Vn, 10 s: 5 x Vn

23.12 POWER SUPPLY

23.12.1 AUXILIARY POWER SUPPLY VOLTAGE

Nominal operating range	24 to 250 V DC ±20% 110 to 240 V AC -20% + 10%
Maximum operating range	19 to 300 V DC
Frequency range for AC supply	45 to 70 Hz
Ripple	<15% for a DC supply (compliant with IEC 60255-26:2013)

23.12.2 NOMINAL BURDEN

Quiescent burden in 20TE	8W
Quiescent burden in 30TE	12W
Additions for energised relay outputs	0.2 W per output relay for trip contacts 0.14 W per output relay for auxiliary contacts
Opto-input burden	2 mA DC per each input

23.12.3 AUXILIARY POWER SUPPLY INTERRUPTION

Standard	IEC 60255-26: 2013

Supply Voltage	Quiescent/Half Load	Full Load
24 V DC	100 ms	100 ms
48 V DC	100 ms	100 ms
110 V DC	100 ms	100 ms
220 V DC	200 ms	200 ms

Note:
Maximum loading = all inputs/outputs energised. Quiescent or 1/2 loading = 1/2 of all inputs/outputs energised.

23.13 INPUT/OUTPUT CONNECTIONS

23.13.1 OPTO-ISOLATED DIGITAL INPUTS

Opto-isolated Digital Inputs (Opto-inputs)	
Compliance	ESI 48-4
Rated nominal voltage	24 to 250 V DC
Withstand	300 V dc
Recognition time without debounce time setting	< 1 ms
Debounce time setting	from 1 to 50 ms in steps of 1 ms
Continuous current draw (burden)	2 mA

23.13.1.1 NOMINAL PICKUP AND RESET THRESHOLDS

Selectable threshold voltage (PU level) *	24, 30, 48, 110, 220 V DC
DO level	fixed -20% of PU level

Note:
** There are different Inputs settings options depending on the Cortec selection.*
For options B, D and J (only inputs from I/O type 1 in SLOT C & D. See wiring diagrams for 30TE): One Opto Config setting range (Global Nominal Voltage & Characteristic settings) available.
For options C, E, F, G and H: Two Opto Config X setting ranges available 1 and 2(Global Nominal Voltage X & Characteristic settings X).
Refer to Configuring the Opto-Inputs section in the Digital I/O and Flexlogic Equation Editor chapter for more detailed information.

Note:
Debounce time setting is required to make the opto-inputs immune to induced AC voltages.

23.13.1.2 OPTO-ISOLATED TRIP CIRCUIT SUPERVISION INPUTS (TCS)*

Opto-isolated Trip Circuit Supervision Digital Inputs (TCS opto-inputs)	
Compliance	ESI 48-4
Rated nominal voltage	24 to 250 V DC
Voltage threshold for TCS inputs *	Fixed or configurable (Cortec dependent)
Withstand	300 V DC
Recognition time without debounce time setting	<1 ms
Continuous current draw (burden)	1 to 2.5 mA

Note:
** For options B, D and J (only inputs from I/O type 1 in SLOT C & D. See wiring diagrams for 30TE): TCS inputs (4 and 5) have fixed DC voltage level as 5V, with no hysteresis.*
For options C, E, F, G and H: TCS inputs (4 and 5) Global Nominal Voltage & Characteristic settings are configurable as per Normal opto-isolated digital inputs with two range options available (Opto Config 1 and Opto Config 2).

Note:
** See wiring diagram for the location of these inputs.*

23.13.2 RL1, RL2, AND RL3 OUTPUT CONTACTS*

Compliance	In accordance with IEC 60255-1:2009
Use	General purpose relay outputs for tripping, opening and closing
Rated voltage	300 V
Maximum continuous current	10 A
Short duration withstand carry	30 A for 3 s 250 A for 30 ms
Make and break, dc resistive	50 W
Make and break, dc inductive	62.5 W (L/R = 50 ms)
Make and break, ac resistive	2500 VA resistive (cos phi = unity)
Make and break, ac inductive	2500 VA inductive (cos phi = 0.7)
Make and carry, dc resistive	30 A for 3 s, 10000 operations (subject to a maximum load of 7500W))
Make, carry and break, dc resistive	4 A for 1.5 s, 10000 operations (subject to the above limit for make and break, dc resistive load)
Make, carry and break, dc inductive	0.5 A for 1 s, 10000 operations (subject to the above limit for make and break, dc inductive load)
Make, carry and break ac resistive	30 A for 200 ms, 2000 operations (subject to the above limits)
Make, carry and break ac inductive	10 A for 1.5 s, 10000 operations (subject to the above limits)
Loaded contact	10000 operations min.
Unloaded contact	100000 operations min.
Operate time	< 5 ms
Reset time	< 5 ms

Note:
** For 30TE, RL1, RL2 & RL3 are only applicable to I/O type 1 & 2. See wiring diagram for 30TE for more detailed information.*

23.13.3 AUXILIARY OUTPUT CONTACTS

Compliance	In accordance with IEC 60255-1:2009
Use	General purpose relay outputs for signalling
Rated voltage	300 V
Maximum continuous current	5 A
Short duration withstand carry	10 A for 3 s
Make and break, dc resistive	24 W
Make and carry, dc resistive	10 A for 3 s
Operate time	< 5 ms
Reset time	< 5 ms

23.13.4 WATCHDOG CONTACT

Use	Normally closed non-programmable contacts for relay healthy/relay fail indication
Breaking capacity, dc resistive	24 W

Note:
Relay output 8 or 6 ("Critical Fail" as per the wiring diagrams) is the watchdog contact relay for Multilin Agile.

23.14 ENVIRONMENTAL CONDITIONS

23.14.1 AMBIENT TEMPERATURE RANGE

Compliance	IEC 60255-27: 2014
Test method	IEC 60068-2-1:2007 and IEC 60068-2-2 2007
Operating temperature range	-25°C to +60°C (continuous)
Storage and transit temperature range	-40°C to +85°C (continuous)
Altitude	up to 2000 m

Compliance	UL508
Test method	UL508 - 18th ed
Operating temperature range	-25°C to +50°C

23.14.2 TEMPERATURE ENDURANCE TEST

Temperature Endurance Test	
Test method	IEC 60068-2-1: 2007 and 60068-2-2: 2007
Operating temperature range	-25°C (96 hours) +60°C (96 hours)
Storage and transit temperature range	-40°C (96 hours) +85°C (96 hours)

23.14.3 AMBIENT HUMIDITY RANGE

Compliance	IEC 60068-2-78: 2013 and IEC 60068-2-30: 2005
Durability	56 days at 93% relative humidity and +40°C
Damp heat cyclic	six (12 + 12) hour cycles, 93% RH, +25 to +55°C

23.15 TYPE TESTS

23.15.1 INSULATION

Compliance	IEC 60255-27: 2014
Insulation resistance	> 100 M ohm at 500 V DC (Using only electronic/brushless insulation tester)

23.15.2 CREEPAGE DISTANCES AND CLEARANCES

Compliance	IEC 60255-27: 2014
Pollution degree	2
Overvoltage category	III
Impulse test voltage (not RJ45)	5 kV
Impulse test voltage (RJ45)	1 kV

23.15.3 IMPULSE VOLTAGE WITHSTAND TEST

Compliance	IEC 60255-27: 2014
Between terminals of all independent circuits	Front time: 1.2 µs, Time to half-value: 50 µs, Peak value: 5 kV, 0.5 J
Between Ethernet communications and protective earth	Front time: 1.2 µs, Time to half-value: 50 µs, Peak value: 1 kV

Note:
Exceptions are communications ports and normally-open output contacts, where applicable.

23.16 ELECTROMAGNETIC COMPATIBILITY

23.16.1 1 MHZ BURST HIGH FREQUENCY DISTURBANCE TEST

Compliance	IEC 60255-26:2013
Common-mode test voltage	2.5 kV
Differential test voltage	1.0 kV

23.16.2 DAMPED OSCILLATORY TEST

Compliance	EN61000-4-18: 2011: Level 4: 3MHz, 10MHz and 30MHz
Common-mode test voltage	4.0 kV

23.16.3 IMMUNITY TO ELECTROSTATIC DISCHARGE

Compliance	IEC 60255-26:2013
Class 4 condition	15 kV discharge in air to user interface, display, and communication port
Class 4 condition	8 kV discharge in contact to exposed metalwork and communication port.

23.16.4 ELECTRICAL FAST TRANSIENT OR BURST REQUIREMENTS

Compliance	EN61000-4-4:2012. Test severity level III and IV, IEC 60255-26:2013
Applied to communication inputs	Amplitude: 2 kV, burst frequency 5 kHz and 100 KHz (level 4)
Applied to power supply and all other inputs except for communication inputs	Amplitude: 4 kV, burst frequency 5 kHz and 100 KHz (level 4)

23.16.5 SURGE WITHSTAND CAPABILITY

Compliance	IEEE/ANSI C37.90.1: 2012
Condition 1	4 kV fast transient and 2.5 kV oscillatory applied common mode and differential mode to opto inputs, output relays, CTs, VTs, power supply
Condition 2	4 kV fast transient and 2.5 kV oscillatory applied common mode to Ethernet communications

23.16.6 SURGE IMMUNITY TEST

Compliance 61000-4-5:2014	IEC 61000-4-5:2014 Level 4, IEC60255-26:2013
Pulse duration	Time to half-value: 1.2/50 µs

Between all groups and protective earth conductor terminal	Amplitude 4 kV
Between terminals of each group (excluding communications ports, where applicable)	Amplitude 2 kV

23.16.7 IMMUNITY TO RADIATED ELECTROMAGNETIC ENERGY

Compliance	IEC 60255-26:2013
Frequency band	80 MHz to 1.0 GHz
Spot tests at	80, 160, 380, 450, 900, 1850, 2150 MHz
Test field strength	10 V/m
Test using AM	1 kHz @ 80%
Compliance	IEEE/ANSI C37.90.2: 2004
Frequency band	80 MHz to 1 GHz
Spot tests at	80MHz, 160MHz, 450MHz, 900MHz and 900MHz
Waveform	1 kHz @ 80% am and pulse modulated
Field strength	35 V/m

23.16.8 RADIATED IMMUNITY FROM DIGITAL COMMUNICATIONS

Compliance	IEC 61000-4-3: 2006, Level 4, IEC 60255-26:2013
Frequency bands	800 to 960 MHz, 1.4 to 2.7 GHz
Test field strength	10 V/m
Test using AM	1 kHz / 80%

23.16.9 IMMUNITY TO CONDUCTED DISTURBANCES INDUCED BY RADIO FREQUENCY FIELDS

Compliance	IEC 60255-26:2013, IEC 61000-4-6:2013 Level 3
Frequency bands	150 kHz to 80 MHz
Test disturbance voltage	10 V rms
Test using AM	1 kHz @ 80%
Spot tests	27 MHz and 68 MHz

23.16.10 MAGNETIC FIELD IMMUNITY

Compliance	IEC 61000-4-8:2010 Level 5 IEC61000-4-9:2016 IEC61000-4-110:2017 Level 5
IEC 61000-4-8 test	100 A/m applied continuously, 1000 A/m applied for 3 s
IEC 61000-4-9 test	1000 A/m applied in all planes

IEC 61000-4-10 test	100 A/m applied in all planes at 100 kHz/1 MHz with a burst duration of 2 seconds

Note:
Power frequency magnetic field testing in accordance with IEC 61000-4-8 increases the voltage measurement accuracy to 1%.

23.16.11 CONDUCTED EMISSIONS

Compliance	IEC 60255-26:2013, EN 55016-2-1:2014
Power supply test 1	0.15 - 0.5 MHz, 79 dBµV (quasi peak) 66 dBµV (average)
Power supply test 2	0.5 – 30 MHz, 73 dBµV (quasi peak) 60 dBµV (average)

23.16.12 RADIATED EMISSIONS

Compliance	EN 55022: 2010, IEC 60255-26:2013
Test 1	30 - 230 MHz, 40 dBµV/m at 10 m measurement distance
Test 2	230 - 1 GHz, 47 dBµV/m at 10 m measurement distance
Test 3	1 - 6 GHz, 76 dBµV/m at 10 m measurement distance

23.16.13 POWER FREQUENCY

Compliance	IEC 60255-26:2013
Opto-inputs	300 V common-mode (Class A) 150 V differential mode (Class A)

23.17 ARC FLASH

23.17.1 HS PHASE/GROUND INSTANTANEOUS OVERCURRENT 50P/50G

Nominal operating range	24 to 250 V DC ±20% 110 to 240 V AC -20% + 10%
Maximum operating range	19 to 300 V DC
Frequency range for AC supply	45 to 70 Hz
Ripple	<15% for a DC supply (compliant with IEC 60255-26:2013)
Current:	Phasor magnitude (Special High Speed Algorithm)
Pickup Level:	0.050 to 30.000 x CT in steps of 0.001 x CT
Dropout Level:	97 to 98% of Pickup
Level Accuracy:	For 0.01 to 0.2 x CT: ±2% of reading or 1.5% of rated (whichever is greater)
	For > 0.2 x CT: ±5% of reading
Operate Time:	4-7 ms at > 3 × Pickup at 60 Hz/ 50Hz
Seal-in Time:	0.00 to 10.00 secs

23.17.2 ARC FLASH SENSOR/FIBER

No. of Sensors:	Total 4 (Point and/or Loop Sensors)
Detection Radius:	180 degree
Maximum Fiber Length (Point Sensor):	35 m
Maximum Fiber Length (Loop Sensor):	70 m
Fiber Size:	1000um
Mode:	Multi-mode
Connector:	Small Media Interface (SMI)
Fiber Type:	Plastic Optical Fiber
Bend Radius:	> 25 mm

AF[X] Function	
Default:	Disabled
Range:	Disabled Trip Latched Trip Alarm Latched Alarm Configurable
The selection of Trip, Alarm, Latched Alarm or Configurable setting enables the HS Phase/Ground IOC function.	

AF[X] HS I>	
Default:	2.000 x CT

AF[X] HS I>	
Range:	0.050 to 30.000 x CT
Step:	0.001 x CT

AF[X] HS IN1> Set	
Default:	1.000 x CT
Range:	0.050 to 30.000 x CT
Step:	0.001 x CT

Note:
The value of HS Gnd PICKUP can be set to very high value, when only HS Phs element needs to be applied for Arc Flash detection.
The HS Ground PKP setting is not available if the order code is selected to have just one sensitive ground current input on the J1-Bank (4-0B in the order code).

AF[X] Light Sen 1(4)	
Default:	Disabled
Range:	Disabled Enabled
Light Sensor 1 (4) is the setting used to enable/disable a specific light sensor. It is important to disable each un-used light sensor, even if nothing is connected to it. If not, the Light Sensor 1 (4) Trouble operands and Light Sensor Trouble operand will engage for the unused sensors.	

Note:
No light settings are needed due to the automatic threshold capabilities included in the relay, described in the next section.

AF[X] Seal-in Time	
Default:	0.00 s
Range:	0.00 to 10.00 s
Step:	0.01 s
This setting specifies the length of time taken to extend the Arc Flash S1(4) OP and Arc Flash OP operands by a time beyond which any of the light sensors AND any of the HS current elements are picked up. The recommended time is the expected breaker operating time plus some margin, typically 30%.	

Note:
The Arc Flash OP operand is typically much shorter than the actual breaker operating time; so there is a risk that the relay trip contact could attempt to open the DC trip circuit long before the breaker auxiliary contacts open the DC trip circuit, which could damage the relay trip contact. Hence the need for this seal-in delay: during an actual arc flash event, the light pulse can be as short as 20msec. The arc flash logic of the relay extends the arc flashlight operands by 20msec of a cycle for added dependability, however this is still much shorter than the expected breaker operating time. With the Seal-in Time setting, the Arc Flash OP operand can be coordinated with the expected HS current operating time, which is very similar to the breaker trip time.

AF[X] Inhibit	
Default:	Off

AF[X] Inhibit	
Range:	Off Any operand from the list of FlexLogic operands

AF[X] Rly OP[X]	
Default:	Do Not Operate
Range:	Do Not Operate Operate

Events	
Default:	Enabled
Range:	Enabled Disabled

Targets	
Default:	Latched
Range:	Self-reset Latched Disabled

APPENDIX A

ORDERING OPTIONS

Information Required with Order:

Variants	Order Number		1 - 4	5	6	7	8	9	10	11	12-13	14	15
Multilin Agile Feeder Application													
Feeder Management Protection - Directional (with voltage and current inputs)			P14D										
Feeder Management Protection - Non Directional (current inputs only)			P14N										
Voltage/Frequency Protection (voltage inputs only)			P94V										
Application Package Options	**Case**												
Base				B									
Base + PWH	30TE	P14D		H									
Base + 32/32N power, 79/25 reclose, df/dt frequency, 21FL fault locator	20TE 30TE	P14D		L									
P14DL + HIF downed conductor (SEF CT only)** TGFD transient ground fault (standard CT only)***	30TE	P14D		Z									
Base + 79 reclose	20TE 30TE	P14N		L									
P14NL + HIF downed conductor (SEF CT only)**	30TE	P14N		Z									
Base + 79/25 reclose	20TE 30TE	P94V		P									
P14DL + TGFD transient ground fault (standard CT only)***	20TE	P14D		Z									
Current/Voltage Inputs													
Standard Earth (Ground) CT			P14D/N		1								
Voltage Only			P94V		1								
Sensitive Earth (Ground) Fault CT			P14D/N		2								
Hardware Options													
EIA RS485 serial comms - with RJ45 Engineering Port (only)	20TE 30TE					2							
EIA RS485 serial comms and station bus - Ethernet Single channel RJ45 copper	20TE 30TE					5							
EIA RS485 serial comms and station bus - Ethernet Single channel fiber	20TE 30TE					6							
2x EIA RS485 serial, 2x RJ45 Ethernet (configurable PRP/HSR/LLA/RSTP) and 1x RJ45	20TE					A							
2x EIA RS485 serial, 2x fiber Ethernet (configurable PRP/HSR/LLA/RSTP) and 1x RJ45	20TE					B							
2x EIA RS485 serial, 2x fiber Ethernet (configurable PRP/HSR/LLA/RSTP) and 1x fiber	20TE					C							

Variants	Order Number	1 - 4	5	6	7	8	9	10	11	12-13	14	15
	Case											
1x EIA RS485 serial, 2x RJ45 Ethernet (configurable PRP/HSR/LLA/RSTP) and 1x RJ45	30TE				D							
1x EIA RS485 serial, 2x fiber Ethernet (configurable PRP/HSR/LLA/RSTP) and 1x RJ45	30TE				E							
1x EIA RS485 serial, 2x fiber Ethernet (configurable PRP/HSR/LLA/RSTP) and 1x fiber	30TE				F							
Binary Input/Output Options												
6 inputs (2 for Trip Circuit Supervision) + 4 C/O outputs + 1 watchdog (C/O)	20TE					A						
5 inputs (2 for Trip Circuit Supervision) + 7 outputs + 1 watchdog	20TE					B						
8 inputs (2 for Trip Circuit Supervision) + 5 outputs + 1 watchdog	20TE					C						
11 inputs (2 for Trip Circuit Supervision) + 11 outputs + 1 watchdog	20TE 30TE					D						
14 inputs (2 for Trip Circuit Supervision) + 9 outputs + 1 watchdog	20TE 30TE					E						
16 inputs (4 for Trip Circuit Supervision) + 11 outputs + 1 watchdog	30TE					F						
22 inputs (4 for Trip Circuit Supervision) + 15 outputs + 1 watchdog	30TE					G						
30 inputs (6 for Trip Circuit Supervision) + 21 outputs + 1 watchdog	30TE					H						
24 inputs (6 for Trip Circuit Supervision) + 25 outputs + 1 watchdog	30TE					J						
12 inputs (2 for Trip Circuit Supervision) + 9 outputs (4NO + 4C/O) + 1 watchdog (C/O)	20TE 30TE					K						
14 inputs (4 for Trip Circuit Supervision) + 10 outputs (5NO + 5 C/O) + 1 watchdog (NC)	30TE					L						
20 inputs (4 for Trip Circuit Supervision) + 14 outputs (9NO + 5 C/O) + 1 watchdog (NC)	30TE					M						
16 inputs (4 for Trip Circuit Supervision) + 11 outputs + 1 watchdog (Ring terminals)	30TE					P						
22 inputs (4 for Trip Circuit Supervision) + 15 outputs + 1 watchdog (Ring + Pin hybrid terminals)	30TE					R						
8 inputs (2 for Trip Circuit Supervision) + 5 outputs + 1 watchdog (Ring terminals)	20TE					S						
4 Arc Flash point-loop sensors + 2SSR + 6 inputs + 4 outputs + 1 watchdog (NC)	20TE 30TE					T						

Variants	Order Number	1 - 4	5	6	7	8	9	10	11	12-13	14	15
	Case											
4 Arc Flash point-loop sensors + 2SSR + 14 inputs (4 for Trip Circuit Supervision) + 11 outputs (1NC + 5NO +5 C/O) + 1 watchdog (NC)	30TE					U						
4 Arc Flash point-loop sensors + 2SSR + 20 inputs (4 for Trip Circuit Supervision) + 15 outputs (1NC + 9NO + 5 C/O) + 1 watchdog (NC)	30TE					V						
4 Arc Flash point-loop sensors + 2SSR + 16 inputs (4 for Trip Circuit Supervision) + 12 output (10NO + 2NC) + 1 watchdog (NC)	30TE					W						
Communication Protocols/Cybersecurity												
DNP3.0/Modbus/IEC 60870-5-103/IEC 60870-5-104							2					
IEC 61850/DNP3.0/Modbus/IEC 60870-5-103/IEC 60870-5-104							3					
IEC 61850/DNP3.0/Modbus/IEC 60870-5-103/IEC 60870-5-104 + Advanced Cyber Level 2							4					
Case												
20TE Flush (4 inch width) with text display								B				
30TE Flush (6"), 6 function keys, 16 programmable LEDs and Color Graphical HMI (IEC version)*								C				
30TE Flush (6"), 6 function keys, 16 programmable LEDs and Color Graphical HMI (ANSI version)*								E				
30TE Flush (6"), 6 function keys, 16 programmable LEDs, Color Graphical HMI & Bay Control (IEC version)								G				
30TE Flush (6"), 6 function keys, 16 programmable LEDs, Color Graphical HMI & Bay Control (ANSI version)								N				
Software upgrade only (via After Sales)								0				
Language												
English (UK)/English (US)/French/Spanish/Russian/Turkish									0			
English (UK)/English (US)/Polish/German									1			
Software Version												
09: New IO variants including Arc Flash and/or C/O outputs										09		
08: HIF, Ring TBs, PL, DE language support, IEC 61850, advanced cybersecurity & logic enhancements										08		
06: Moving Avg. Voltage Protection, Volt/Hertz (P94VB), IEC 61850 LN & SW enhancements										06		
05: 30TE, TGFD, YN, 32N, 27Q/T, 21BL, extended I/O, IEC 61850 & advanced cybersecurity enhancements										05		

Variants	Order Number	1 - 4	5	6	7	8	9	10	11	12-13	14	15
Customization/Regionalization												
Regular (IEC standards and 50Hz/1 amp based default settings)											0	
IEEE market default configuration - US English, 60Hz and 5 amp preconfiguration											6	
Customer specific											A	
Hardware Design Suffix												
Enhanced model												E

Note:

	New Option
*	Offers a single line diagram for control, but with a basic, fixed bay template only. **G** and **N** options are required for a configurable mimic diagram.
**	HiF (with sensitive CT TGFD not available
**	HiF support in 30TE (6") version only
***	TGFD (with standard CT, HiF not available)
#	P40 Agile Enhanced is now rebranded to Multilin Agile

APPENDIX B

SETTINGS AND SIGNALS

Tables containing a full list of settings for each model are provided in a separate Excel file attached as an embedded resource. To access the spreadsheet file click on the button below.

This Settings and Signals file covers software version 09A for both Feeder and Motor devices.

Note:
An Open File dialogue box may open with a warning message about potential harm from programs, macros or viruses. The file supplied does not contain any harmful content, and may be safely opened.

Settings and Signals

APPENDIX C

WIRING DIAGRAMS

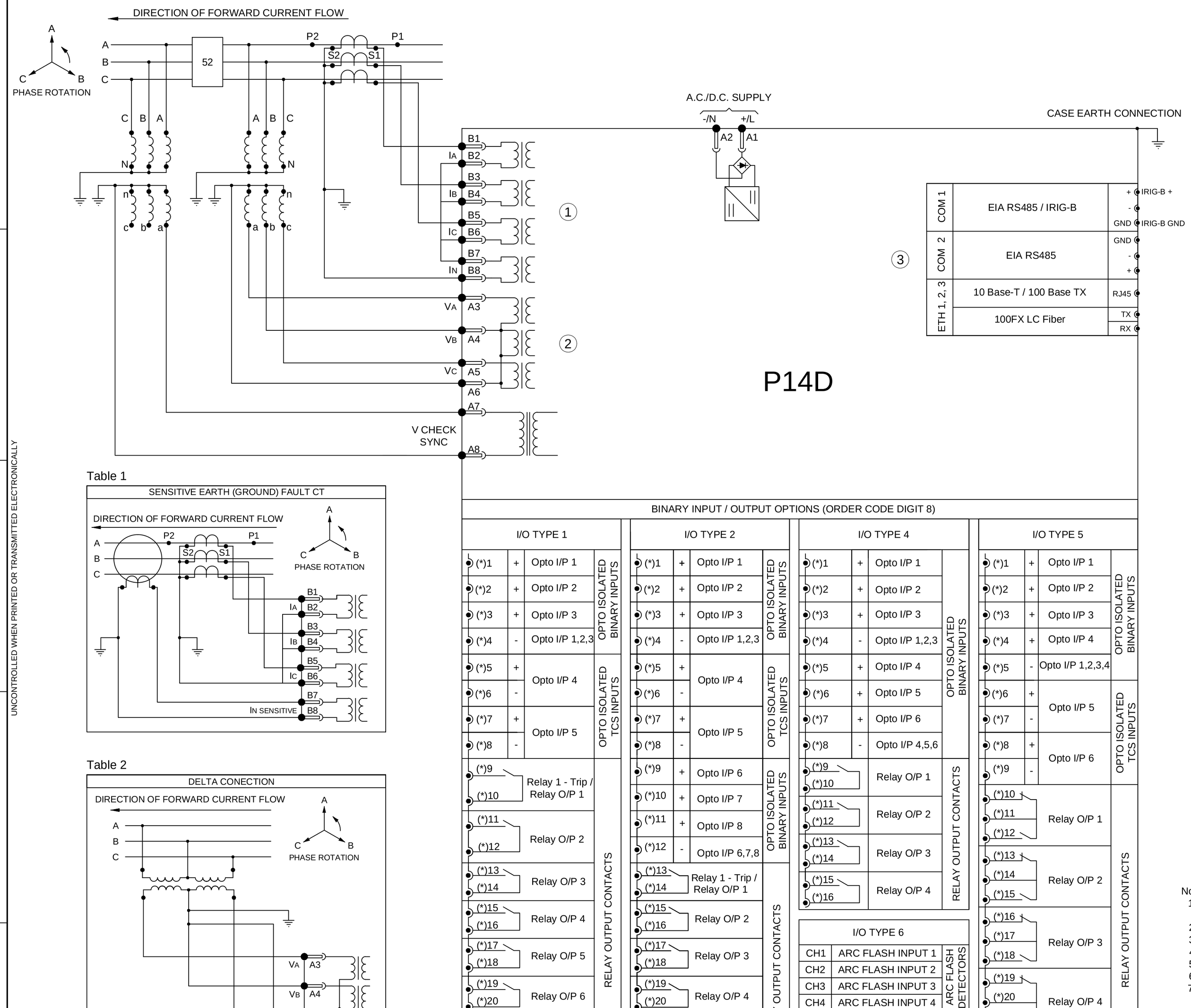

FIG. 1

REVISION HISTORY						
REV	ITR	ECO #	DD/MM/YY	DESCRIPTION	DRAWN	APPROVED
0		T2019037684	14-03-19	FIRST ISSUE		J.A.
1		T2019047761	08-04-19	FIRST REVISION		J.A.
2		T2019098259	01-10-19	SECOND REVISION		J.A.
3		T2019108337	16-10-19	THIRD REVISION		J.A.
A	2	T2019118511	21-11-19	FOURTH REVISION		A.Z.
A	3	T2020048981	22-04-20	GENERAL REVISION		A.Z.
B	2	T2020048992	29-04-20	GENERAL REVISION		A.Z.
C	2	CID006806 T2021030001	11-03-21	GENERAL REVISION		N.M.
D	2	CID006893 T2021050041	17-05-21	GENERAL REVISION		N.M.
E	2	CID006893 T2021080002	03-08-21	GENERAL REVISION		A.Z.
F	2	CID008056 T2023090022	15-11-23	GENERAL REVISION		I.M.
G	2	T2025020024	14-02-2025	New cortecs added for arcflash and 339 IO boards.		I.O.
G	3	CID008690 T2025110055	24-11-2025	Note 7 is changed to add the maximum current of outputs for I/O type 5 & 6.		I.O.

Table 3

COMMUNICATIONS					
CORTEC DIGIT 7	COM 1	COM 2	ETH1	ETH 2	ETH3
2	EIA RS485/IRIG-B	-	RJ45 ENG PORT	-	-
5	EIA RS485/IRIG-B	-	RJ45	-	-
6	EIA RS485/IRIG-B	-	Fiber	-	-
A	EIA RS485/IRIG-B	EIA RS485	RJ45	RJ45	RJ45
B	EIA RS485/IRIG-B	EIA RS485	RJ45	Fiber	Fiber
C	EIA RS485/IRIG-B	EIA RS485	Fiber	Fiber	Fiber

Table 4

		INPUT/OUTPUT		
		DESCRIPTION	SLOT	
			D	C
ORDER CODE DIGIT (8)	A	6 inputs (2 for Trip Circuit Supervision) + 4 outputs (C/O) + 1 Watchdog (C/O)	I/O TYPE 5	N/A
	B	5 inputs (2 for Trip Circuit Supervision) + 7 outputs (NO) +1 Watchdog (NC)	I/O TYPE 1	N/A
	C	8 inputs (2 for Trip Circuit Supervision) + 5 outputs (NO) +1 Watchdog (NC)	I/O TYPE 2	N/A
	D	11 inputs (2 for Trip Circuit Supervision) + 11 outputs (NO) +1 Watchdog (NC)	I/O TYPE 1	I/O TYPE 4
	E	14 inputs (2 for Trip Circuit Supervision) + 9 outputs (NO) +1 Watchdog (NC)	I/O TYPE 2	I/O TYPE 4
	K	12 inputs (2 for Trip Circuit Supervision) + 8 outputs (4NO+4C/O) + 1 Watchdog (C/O)	I/O TYPE 5	I/O TYPE 4
	S	8 inputs (2 for Trip Circuit Supervision) + 5 outputs (NO) + 1 Watchdog (NC) (Ring terminals)	I/O TYPE 2	N/A
	T	4 Arc Flash point/loop sensors + 2SSR (NO) + 6 inputs + 4 outputs (NO) + 1 Watchdog (NC)	I/O TYPE 6	I/O TYPE 4

Table 1

SENSITIVE EARTH (GROUND) FAULT CT

Table 2

DELTA CONECTION

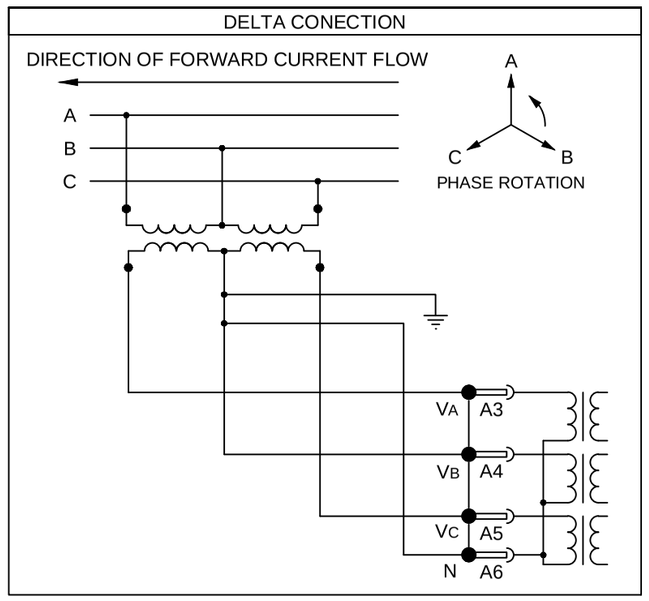

BINARY INPUT / OUTPUT OPTIONS (ORDER CODE DIGIT 8)

I/O TYPE 1			
(*)1	+	Opto I/P 1	OPTO ISOLATED BINARY INPUTS
(*)2	+	Opto I/P 2	
(*)3	+	Opto I/P 3	
(*)4	-	Opto I/P 1,2,3	
(*)5	+	Opto I/P 4	OPTO ISOLATED TCS INPUTS
(*)6	-		
(*)7	+	Opto I/P 5	
(*)8	-		
(*)9 (*)10		Relay 1 - Trip / Relay O/P 1	RELAY OUTPUT CONTACTS
(*)11 (*)12		Relay O/P 2	
(*)13 (*)14		Relay O/P 3	
(*)15 (*)16		Relay O/P 4	
(*)17 (*)18		Relay O/P 5	
(*)19 (*)20		Relay O/P 6	
(*)21 (*)22		Relay O/P 7	
(*)23 (*)24		Critical Fail/ Relay O/P 8	

I/O TYPE 2			
(*)1	+	Opto I/P 1	OPTO ISOLATED BINARY INPUTS
(*)2	+	Opto I/P 2	
(*)3	+	Opto I/P 3	
(*)4	-	Opto I/P 1,2,3	
(*)5	+	Opto I/P 4	OPTO ISOLATED TCS INPUTS
(*)6	-		
(*)7	+	Opto I/P 5	
(*)8	-		
(*)9	+	Opto I/P 6	OPTO ISOLATED BINARY INPUTS
(*)10	+	Opto I/P 7	
(*)11	+	Opto I/P 8	
(*)12	-	Opto I/P 6,7,8	
(*)13 (*)14		Relay 1 - Trip / Relay O/P 1	RELAY OUTPUT CONTACTS
(*)15 (*)16		Relay O/P 2	
(*)17 (*)18		Relay O/P 3	
(*)19 (*)20		Relay O/P 4	
(*)21 (*)22		Relay O/P 5	
(*)23 (*)24		Critical Fail/ Relay O/P 6	

I/O TYPE 4			
(*)1	+	Opto I/P 1	OPTO ISOLATED BINARY INPUTS
(*)2	+	Opto I/P 2	
(*)3	+	Opto I/P 3	
(*)4	-	Opto I/P 1,2,3	
(*)5	+	Opto I/P 4	
(*)6	+	Opto I/P 5	
(*)7	+	Opto I/P 6	
(*)8	-	Opto I/P 4,5,6	
(*)9 (*)10		Relay O/P 1	RELAY OUTPUT CONTACTS
(*)11 (*)12		Relay O/P 2	
(*)13 (*)14		Relay O/P 3	
(*)15 (*)16		Relay O/P 4	

I/O TYPE 6		
CH1	ARC FLASH INPUT 1	ARC FLASH DETECTORS
CH2	ARC FLASH INPUT 2	
CH3	ARC FLASH INPUT 3	
CH4	ARC FLASH INPUT 4	
(*)1 (*)2	Relay O/P 1 (SSR1)	RELAY OUTPUT CONTACTS
(*)3 (*)4	Relay O/P 2 (SSR2)	
(*)5 (*)6	Critical Fail/ Relay O/P 3	

I/O TYPE 5			
(*)1	+	Opto I/P 1	OPTO ISOLATED BINARY INPUTS
(*)2	+	Opto I/P 2	
(*)3	+	Opto I/P 3	
(*)4	+	Opto I/P 4	
(*)5	-	Opto I/P 1,2,3,4	
(*)6	+	Opto I/P 5	OPTO ISOLATED TCS INPUTS
(*)7	-		
(*)8	+	Opto I/P 6	
(*)9	-		
(*)10 (*)11 (*)12		Relay O/P 1	RELAY OUTPUT CONTACTS
(*)13 (*)14 (*)15		Relay O/P 2	
(*)16 (*)17 (*)18		Relay O/P 3	
(*)19 (*)20 (*)21		Relay O/P 4	
(*)22 (*)23 (*)24		Critical Fail/ Relay O/P 5	

Notes

1. Standard Earth (Ground) Fault CT typical connections (Order code digit '6', option '1'). For Sensitive Earth (Ground) Fault CT connections (Order code digit '6', option '2'), refer Table 1.
2. Wye VT typical connections. For Delta connections, refer Table 2.
3. For Communciation interface options, refer to Table 3.
4. For Input/Output options, refer to Table 4.
5. (*) To be replaced by Slot digit (e.g. C1 for using Slot C in first input).
6. Outputs working as "Relay 1 - Trip" and "Critical Fail" only in I/O when located in Slot D.
7. Maximum continuous current supported by outputs 1, 2 and 3 of I/O type 1 and 2, outputs 1-5 of I/O type 5 and outputs 1 and 2 of I/O type 6 is 10A.
   For all other outputs of different I/O types, it is 5A.

UNLESS OTHERWISE SPECIFIED DIMENSIONS ARE IN mm

UNLESS OTHERWISE SPECIFIED IN DRAWING TOLERANCES (mm):
0,5 - 6 ± 0,1 | 400 - 1000 ± 0,8
6 - 30 ± 0,2 | 1000 - 2000 ± 1,2
30 - 120 ± 0,3 | 2000 - 4000 ± 2,0
120 - 400 ± 0,5 | ANGLES: ± 1,0 DEG

	NAME	DD/MM/YY
DRAWN	N. M.	22-01-21
CHECKED		
APPROVED		

MATERIAL:

FINISH:

THIRD ANGLE PROJECTION

CTQ (Critical to Quality): MAJOR | INSPECTION

SCALE: | NEXT STAGE: 2

GE VERNOVA
650 Markland ST, Markham, ON, Canada L6C 0M1 www.gevernova.com/grid-solutions

TITLE: P14D DIRECTIONAL PHASE OVERCURRENT IED, 20TE CASE

STATUS: APPROVED

SIZE: A2 | DWG.NO. C154201 | REV. ITR. G 3

PART NUMBER: C1542P1 REV G3 | SHEET 1

UNCONTROLLED WHEN PRINTED OR TRANSMITTED ELECTRONICALLY

©2024 GE Vernova Inc. proprietary and confidential information. All Rights Reserved.
This document is the property of GE Vernova and may not be reproduced, transmitted, stored, or copied in whole or in part, or used to furnish information to others, without the prior written permission of GE Vernova.
GE is a trademark of General Electric Company and is used under trademark license

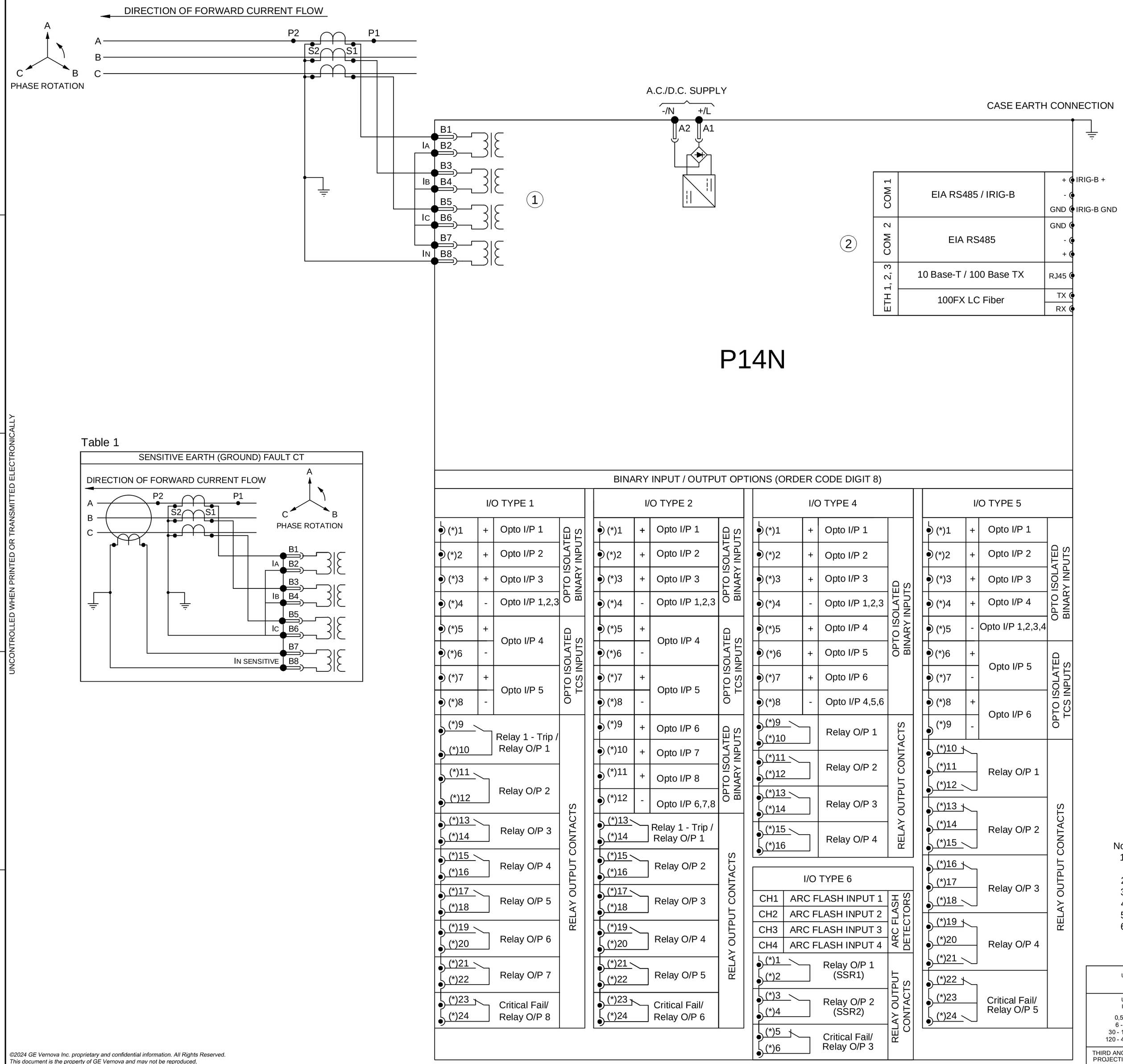

FIG. 2

REVISION HISTORY						
REV	ITR	ECO #	DD/MM/YY	DESCRIPTION	DRAWN	APPROVED
0		T2019047761	08-04-19	FIRST REVISION		J.A.
1		T2019098259	01-10-19	SECOND REVISION		J.A.
2		T2019108337	16-10-19	THIRD REVISION		J.A.
A	2	T2019118511	21-11-19	FOURTH REVISION		A.Z.
B	2	T2020048992	29-04-20	GENERAL REVISION		A.Z.
C	2	CID006806 T2021030001	11-03-21	GENERAL REVISION		N.M.
D	2	CID006893 T2021050041	17-05-21	GENERAL REVISION		N.M.
E	2	CID006893 T2021080002	03-08-21	GENERAL REVISION		A.Z.
F	2	CID008056 T2023090022	15-11-23	GENERAL REVISION		I.M.
G	2	T2025020024	14-02-2025	New cortecs added for arcflash and 339 IO boards.		I.O.
G	3	CID008690 T2025110055	24-11-2025	Note 6 is changed to add the maximum current of outputs for I/O type 5 & 6.		I.O.

Table 2

COMMUNICATIONS					
CORTEC DIGIT 7	COM 1	COM 2	ETH1	ETH 2	ETH3
2	EIA RS485/IRIG-B	-	RJ45 ENG PORT	-	-
5	EIA RS485/IRIG-B	-	RJ45	-	-
6	EIA RS485/IRIG-B	-	Fiber	-	-
A	EIA RS485/IRIG-B	EIA RS485	RJ45	RJ45	RJ45
B	EIA RS485/IRIG-B	EIA RS485	RJ45	Fiber	Fiber
C	EIA RS485/IRIG-B	EIA RS485	Fiber	Fiber	Fiber

Table 3

		INPUT/OUTPUT		
		DESCRIPTION	SLOT D	SLOT C
ORDER CODE DIGIT (8)	A	6 inputs (2 for Trip Circuit Supervision) + 4 outputs (C/O) + 1 Watchdog (C/O)	I/O TYPE 5	N/A
	B	5 inputs (2 for Trip Circuit Supervision) + 7 outputs (NO) +1 Watchdog (NC)	I/O TYPE 1	N/A
	C	8 inputs (2 for Trip Circuit Supervision) + 5 outputs (NO) +1 Watchdog (NC)	I/O TYPE 2	N/A
	D	11 inputs (2 for Trip Circuit Supervision) + 11 outputs (NO) +1 Watchdog (NC)	I/O TYPE 1	I/O TYPE 4
	E	14 inputs (2 for Trip Circuit Supervision) + 9 outputs (NO) +1 Watchdog (NC)	I/O TYPE 2	I/O TYPE 4
	K	12 inputs (2 for Trip Circuit Supervision) + 8 outputs (4NO+4C/O) + 1 Watchdog (C/O)	I/O TYPE 5	I/O TYPE 4
	S	8 inputs (2 for Trip Circuit Supervision) + 5 outputs (NO) + 1 Watchdog (NC) (Ring terminals)	I/O TYPE 2	N/A
	T	4 Arc Flash point/loop sensors + 2SSR (NO) + 6 inputs + 4 outputs (NO) + 1 Watchdog (NC)	I/O TYPE 6	I/O TYPE 4

Table 1

SENSITIVE EARTH (GROUND) FAULT CT

Notes

1. Standard Earth (Ground) Fault CT typical connections (Order code digit '6', option '1'). For Sensitive Earth (Ground) Fault CT connections (Order code digit '6', option '2'), refer Table 1.
2. For Communciation interface options, refer to Table 2.
3. For Input/Output options, refer to Table 3.
4. (*) To be replaced by Slot digit (e.g. C1 for using Slot C in first input).
5. Outputs working as "Relay 1 - Trip" and "Critical Fail" only in I/O when located in Slot D.
6. Maximum continuous current supported by outputs 1, 2 and 3 of I/O type 1 and 2, outputs 1-5 of I/O type 5 and outputs 1 and 2 of I/O type 6 is 10A.
   For all other outputs of different I/O types, it is 5A.

UNCONTROLLED WHEN PRINTED OR TRANSMITTED ELECTRONICALLY

©2024 GE Vernova Inc. proprietary and confidential information. All Rights Reserved.
This document is the property of GE Vernova and may not be reproduced, transmitted, stored, or copied in whole or in part, or used to furnish information to others, without the prior written permission of GE Vernova.
GE is a trademark of General Electric Company and is used under trademark license

UNLESS OTHERWISE SPECIFIED DIMENSIONS ARE IN mm

UNLESS OTHERWISE SPECIFIED IN DRAWING TOLERANCES (mm):
0,5 - 6 ± 0,1
6 - 30 ± 0,2
30 - 120 ± 0,3
120 - 400 ± 0,5
400 - 1000 ± 0,8
1000 - 2000 ± 1,2
2000 - 4000 ± 2,0
ANGLES: ± 1,0 DEG

THIRD ANGLE PROJECTION

CTQ (Critical to Quality): MAJOR ◇ INSPECTION

	NAME	DD/MM/YY
DRAWN	N. M.	22-01-21
CHECKED		
APPROVED		

MATERIAL:

FINISH:

SCALE: NEXT STAGE: 3

GE VERNOVA
650 Markland ST. Markham, ON, Canada L6C 0M1 www.gevernova.com/grid-solutions

TITLE: P14N NON-DIRECTIONAL PHASE OVERCURRENT IED, 20TE CASE

STATUS: APPROVED

SIZE: A2 | DWG.NO. C154202 | REV. ITR. G 3

PART NUMBER: C1542P2 REV G3 | SHEET 2

FIG. 3

REVISION HISTORY						
REV	ITR	ECO #	DD/MM/YY	DESCRIPTION	DRAWN	APPROVED
1		T2019047761	08-04-19	FIRST REVISION		J.A.
2		T2019098259	01-10-19	SECOND REVISION		J.A.
3		T2019108337	16-10-19	THIRD REVISION		J.A.
A	2	T2019118511	21-11-19	FOURTH REVISION		A.Z.
A	3	T2020048981	22-04-20	GENERAL REVISION		A.Z.
B	2	T2020048992	29-04-20	GENERAL REVISION		A.Z.
C	2	CID006806 T2021030001	11-03-21	GENERAL REVISION		N.M.
D	2	CID006893 T2021050041	17-05-21	GENERAL REVISION		N.M.
E	2	CID006893 T2021080002	03-08-21	GENERAL REVISION		A.Z.
F	2	CID008056 T2023090022	15-11-23	GENERAL REVISION		I.M.
G	2	T2025020024	14-02-2025	New cortecs added for arcflash and 339 IO boards.		I.O.
G	3	CID008690 T2025110055	24-11-2025	Arc flash option "T" is removed from the table 3 and thus, I/O type 6 is also removed from I/O configuration table. Note 6 is also changed to add the maximum current of outputs for I/O type 5.		I.O.

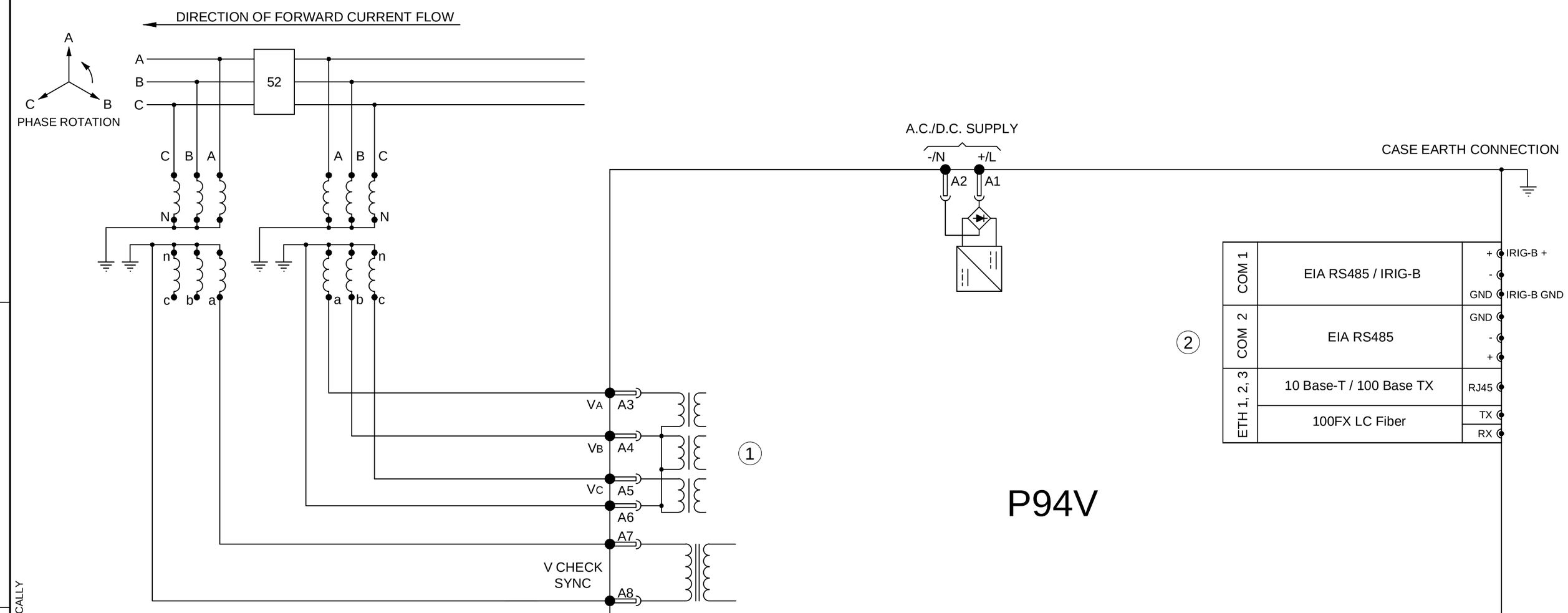

Table 1

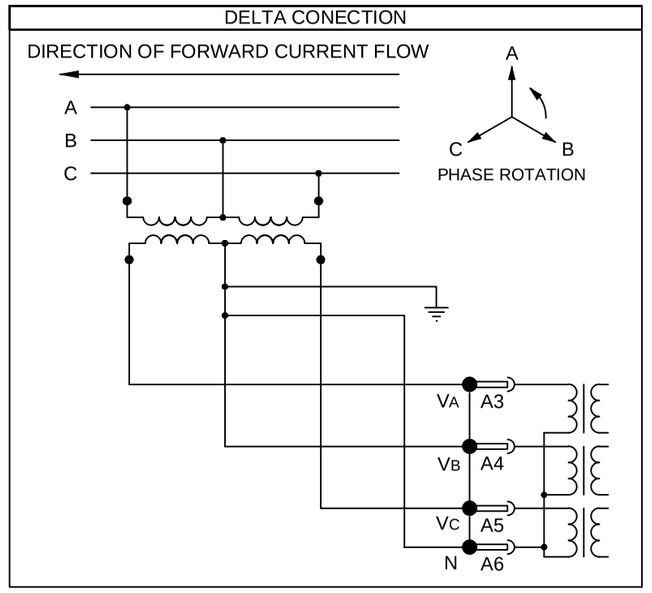

Table 2

COMMUNICATIONS					
CORTEC DIGIT 7	COM 1	COM 2	ETH1	ETH 2	ETH3
2	EIA RS485/IRIG-B	-	RJ45 ENG PORT	-	-
5	EIA RS485/IRIG-B	-	RJ45	-	-
6	EIA RS485/IRIG-B	-	Fiber	-	-
A	EIA RS485/IRIG-B	EIA RS485	RJ45	RJ45	RJ45
B	EIA RS485/IRIG-B	EIA RS485	RJ45	Fiber	Fiber
C	EIA RS485/IRIG-B	EIA RS485	Fiber	Fiber	Fiber

Table 3

		INPUT/OUTPUT		
		DESCRIPTION	SLOT	
			D	C
ORDER CODE DIGIT (8)	A	6 inputs (2 for Trip Circuit Supervision) + 4 outputs (C/O) + 1 Watchdog (C/O)	I/O TYPE 5	N/A
	B	5 inputs (2 for Trip Circuit Supervision) + 7 outputs (NO) +1 Watchdog (NC)	I/O TYPE 1	N/A
	C	8 inputs (2 for Trip Circuit Supervision) + 5 outputs (NO) +1 Watchdog (NC)	I/O TYPE 2	N/A
	D	11 inputs (2 for Trip Circuit Supervision) + 11 outputs (NO) +1 Watchdog (NC)	I/O TYPE 1	I/O TYPE 4
	E	14 inputs (2 for Trip Circuit Supervision) + 9 outputs (NO) +1 Watchdog (NC)	I/O TYPE 2	I/O TYPE 4
	K	12 inputs (2 for Trip Circuit Supervision) + 8 outputs (4NO+4C/O) + 1 Watchdog (C/O)	I/O TYPE 5	I/O TYPE 4
	S	8 inputs (2 for Trip Circuit Supervision) + 5 outputs (NO) + 1 Watchdog (NC) (Ring terminals)	I/O TYPE 2	N/A

BINARY INPUT / OUTPUT OPTIONS (ORDER CODE DIGIT 8)

I/O TYPE 1			
(*)1	+	Opto I/P 1	OPTO ISOLATED BINARY INPUTS
(*)2	+	Opto I/P 2	
(*)3	+	Opto I/P 3	
(*)4	-	Opto I/P 1,2,3	
(*)5	+	Opto I/P 4	OPTO ISOLATED TCS INPUTS
(*)6	-		
(*)7	+	Opto I/P 5	
(*)8	-		
(*)9 (*)10		Relay 1 - Trip / Relay O/P 1	RELAY OUTPUT CONTACTS
(*)11 (*)12		Relay O/P 2	
(*)13 (*)14		Relay O/P 3	
(*)15 (*)16		Relay O/P 4	
(*)17 (*)18		Relay O/P 5	
(*)19 (*)20		Relay O/P 6	
(*)21 (*)22		Relay O/P 7	
(*)23 (*)24		Critical Fail/ Relay O/P 8	

I/O TYPE 2			
(*)1	+	Opto I/P 1	OPTO ISOLATED BINARY INPUTS
(*)2	+	Opto I/P 2	
(*)3	+	Opto I/P 3	
(*)4	-	Opto I/P 1,2,3	
(*)5	+	Opto I/P 4	OPTO ISOLATED TCS INPUTS
(*)6	-		
(*)7	+	Opto I/P 5	
(*)8	-		
(*)9	+	Opto I/P 6	OPTO ISOLATED BINARY INPUTS
(*)10	+	Opto I/P 7	
(*)11	+	Opto I/P 8	
(*)12	-	Opto I/P 6,7,8	
(*)13 (*)14		Relay 1 - Trip / Relay O/P 1	RELAY OUTPUT CONTACTS
(*)15 (*)16		Relay O/P 2	
(*)17 (*)18		Relay O/P 3	
(*)19 (*)20		Relay O/P 4	
(*)21 (*)22		Relay O/P 5	
(*)23 (*)24		Critical Fail/ Relay O/P 6	

I/O TYPE 4			
(*)1	+	Opto I/P 1	OPTO ISOLATED BINARY INPUTS
(*)2	+	Opto I/P 2	
(*)3	+	Opto I/P 3	
(*)4	-	Opto I/P 1,2,3	
(*)5	+	Opto I/P 4	
(*)6	+	Opto I/P 5	
(*)7	+	Opto I/P 6	
(*)8	-	Opto I/P 4,5,6	
(*)9 (*)10		Relay O/P 1	RELAY OUTPUT CONTACTS
(*)11 (*)12		Relay O/P 2	
(*)13 (*)14		Relay O/P 3	
(*)15 (*)16		Relay O/P 4	

I/O TYPE 5			
(*)1	+	Opto I/P 1	OPTO ISOLATED BINARY INPUTS
(*)2	+	Opto I/P 2	
(*)3	+	Opto I/P 3	
(*)4	+	Opto I/P 4	
(*)5	-	Opto I/P 1,2,3,4	
(*)6	+	Opto I/P 5	OPTO ISOLATED TCS INPUTS
(*)7	-		
(*)8	+	Opto I/P 6	
(*)9	-		
(*)10 (*)11 (*)12		Relay O/P 1	RELAY OUTPUT CONTACTS
(*)13 (*)14 (*)15		Relay O/P 2	
(*)16 (*)17 (*)18		Relay O/P 3	
(*)19 (*)20 (*)21		Relay O/P 4	
(*)22 (*)23 (*)24		Critical Fail/ Relay O/P 5	

Notes
1. Wye VT typical connections. For Delta connections, refer Table 1.
2. For Communciation interface options, refer to Table 2.
3. For Input/Output options, refer to Table 3.
4. (*) To be replaced by Slot digit (e.g. C1 for using Slot C in first input).
5. Outputs working as "Relay 1 - Trip" and "Critical Fail" only in I/O when located in Slot D.
6. Maximum continuous current supported by outputs 1, 2 and 3 of I/O type 1 and 2 and outputs 1-5 of I/O type 5 is 10A.
   For all other outputs of different I/O types, it is 5A.

UNCONTROLLED WHEN PRINTED OR TRANSMITTED ELECTRONICALLY

©2024 GE Vernova Inc. proprietary and confidential information. All Rights Reserved.
This document is the property of GE Vernova and may not be reproduced, transmitted, stored, or copied in whole or in part, or used to furnish information to others, without the prior written permission of GE Vernova.
GE is a trademark of General Electric Company and is used under trademark license

UNLESS OTHERWISE SPECIFIED DIMENSIONS ARE IN mm

UNLESS OTHERWISE SPECIFIED IN DRAWING TOLERANCES (mm):
0,5 - 6 ± 0,1 | 400 - 1000 ± 0,8
6 - 30 ± 0,2 | 1000 - 2000 ± 1,2
30 - 120 ± 0,3 | 2000 - 4000 ± 2,0
120 - 400 ± 0,5 | ANGLES: ± 1,0 DEG

THIRD ANGLE PROJECTION | CTQ (Critical to Quality) | MAJOR | INSPECTION

	NAME	DD/MM/YY
DRAWN	N. M.	22-01-21
CHECKED		
APPROVED		
MATERIAL:		
FINISH:		
SCALE:	NEXT STAGE: 4	

GE VERNOVA
650 Markland ST. Markham, ON, Canada L6C 0M1 www.gevernova.com/grid-solutions

TITLE: P94V VOLTAGE & FREQUENCY IED, 20TE CASE
STATUS: APPROVED
SIZE: A2
DWG.NO. C154203
REV. ITR. G 3
PART NUMBER: C1542P3 REV G3
SHEET 3

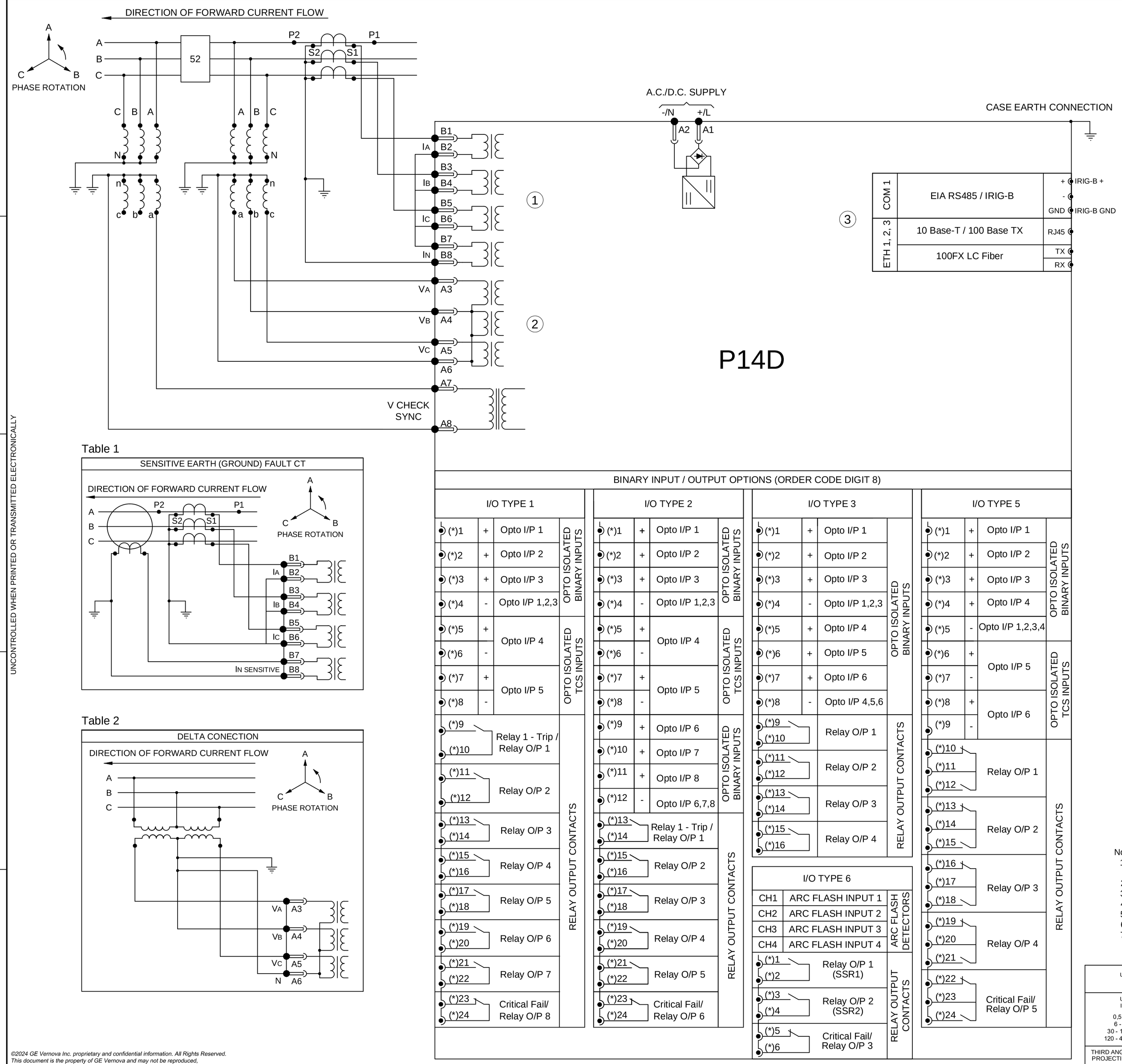

FIG. 6

REVISION HISTORY						
REV	ITR	ECO #	DD/MM/YY	DESCRIPTION	DRAWN	APPROVED
A	1	T2023060050	16/06/23	FIRST ISSUE		I.V.
B	2	T2023070064	19/07/23	GENERAL REVISION		I.M.
C	2	T2024070010	04/07/24	GENERAL REVISION		I.M.
D	2	T2025020024	14/02/2025	New cortecs added for arcflash and 339 IO boards.		I.O.
D	3	CID008690 T2025110055	24/11/2025	T option is added to table 4 and note 7 is changed to add the maximum current of outputs for I/O type 5 & 6.		I.O.

Table 3

COMMUNICATIONS				
ORDER CODE DIGIT 7	COM 1	ETH1	ETH 2	ETH3
2	EIA RS485	RJ45 ENG PORT	-	-
5	EIA RS485	RJ45	-	-
6	EIA RS485	Fiber	-	-
D	EIA RS485	RJ45	RJ45	RJ45
E	EIA RS485	RJ45	Fiber	Fiber
F	EIA RS485	Fiber	Fiber	Fiber

Table 4

		INPUT/OUTPUT				
		DESCRIPTION	SLOT			
			F	E	D	C
ORDER CODE DIGIT (8)	D	11 inputs (2 for Trip Circuit Supervision) + 11 outputs (NO) +1 Watchdog (NC)	I/O TYPE 1	I/O TYPE 3	NA	NA
	E	14 inputs (2 for Trip Circuit Supervision) + 9 outputs (NO) +1 Watchdog (NC)	I/O TYPE 2	I/O TYPE 3	NA	NA
	F	16 inputs (4 for Trip Circuit Supervision) + 11 outputs (10NO+1NC) + 1 Watchdog (NC)	I/O TYPE 2	NA	I/O TYPE 2	NA
	G	22 inputs (4 for Trip Circuit Supervision) + 15 outputs (14NO+1NC) + 1 Watchdog (NC)	I/O TYPE 2	I/O TYPE 3	I/O TYPE 2	NA
	H	30 inputs (6 for Trip Circuit Supervision) + 21 outputs (19NO+2NC) + 1 Watchdog (NC)	I/O TYPE 2	I/O TYPE 3	I/O TYPE 2	I/O TYPE 2
	J	24 inputs (6 for Trip Circuit Supervision) + 25 outputs (23NO+2NC) + 1 Watchdog (NC)	I/O TYPE 2	I/O TYPE 3	I/O TYPE 1	I/O TYPE 1
	K	12 inputs (2 for Trip Circuit Supervision) + 8 outputs (4NO+4C/O) + 1 Watchdog (C/O)	I/O TYPE 5	I/O TYPE 3	N/A	N/A
	L	14 inputs (4 for Trip Circuit Supervision) + 10 outputs (5NO+5C/O) + 1 Watchdog (NC)	I/O TYPE 2	N/A	I/O TYPE 5	N/A
	M	20 inputs (4 for Trip Circuit Supervision) + 14 outputs (9NO+5C/O) + 1 Watchdog (NC)	I/O TYPE 2	I/O TYPE 3	I/O TYPE 5	N/A
	P	16 inputs (4 for Trip Circuit Supervision) + 11 outputs (10NO+1NC) + 1 Watchdog (NC) (Ring terminals)	I/O TYPE 2	N/A	N/A	I/O TYPE 2
	R	22 inputs (4 for Trip Circuit Supervision) + 15 outputs (14NO+1NC) + 1 Watchdog (NC) (Ring + Pin hybrid terminals)	I/O TYPE 2	I/O TYPE 3	N/A	I/O TYPE 2
	T	4 Arc Flash point/loop sensors + 2SSR (NO) + 6 inputs + 4 outputs (NO) + 1 Watchdog (NC)	I/O TYPE 6	I/O TYPE 3	N/A	N/A
	U	4 Arc Flash point/loop sensors + 14 inputs (4 for Trip Circuit Supervision) + 13 outputs (5NO+1NC+5C/O+2SSR) + 1 Watchdog (NC)	I/O TYPE 6	N/A	I/O TYPE 5	I/O TYPE 2
	V	4 Arc Flash point/loop sensors + 20 inputs (4 for Trip Circuit Supervision) + 17 outputs (9NO+1NC+5C/O+2SSR) + 1 Watchdog (NC)	I/O TYPE 6	I/O TYPE 3	I/O TYPE 5	I/O TYPE 2
	W	4 Arc Flash point/loop sensors + 16 inputs (4 for Trip Circuit Supervision) + 14 output (10 NO+2NC+2SSR) + 1 Watchdog (NC)	I/O TYPE 6	N/A	I/O TYPE 2	I/O TYPE 2

Table 1

SENSITIVE EARTH (GROUND) FAULT CT

Table 2

DELTA CONECTION

Notes

1. Earth fault typical CT connections (Order Code Digit 6, option 1). For Sensitive Earth Fault CT option (Order Code Digit 6, option 2) see table 1.
2. Wye VT typical connections. For Delta connections see table 2.
3. For Order Code Communication options see table 3.
4. For Order Code input/output options see table 4. N/A (not available)
5. (*) To be replaced by Slot digit (e.g. C1 for using Slot C in first input).
6. Outputs working as "Relay 1 - Trip" and "Critical Fail" only in I/O when located in Slot F.
7. Maximum continuous current supported by outputs 1, 2 and 3 of I/O type 1 and 2, outputs 1-5 of I/O type 5 and outputs 1 and 2 of I/O type 6 is 10A.
   For all other outputs of different I/O types, it is 5A.

UNCONTROLLED WHEN PRINTED OR TRANSMITTED ELECTRONICALLY

©2024 GE Vernova Inc. proprietary and confidential information. All Rights Reserved.
This document is the property of GE Vernova and may not be reproduced, transmitted, stored, or copied in whole or in part, or used to furnish information to others, without the prior written permission of GE Vernova.
GE is a trademark of General Electric Company and is used under trademark license

UNLESS OTHERWISE SPECIFIED DIMENSIONS ARE IN mm

UNLESS OTHERWISE SPECIFIED IN DRAWING TOLERANCES (mm):
0,5 - 6 ± 0,1
6 - 30 ± 0,2
30 - 120 ± 0,3
120 - 400 ± 0,5
400 - 1000 ± 0,8
1000 - 2000 ± 1,2
2000 - 4000 ± 2,0
ANGLES: ± 1,0 DEG

THIRD ANGLE PROJECTION

CTQ (Critical to Quality): MAJOR, INSPECTION

	NAME	DD/MM/YY
DRAWN		
CHECKED		
APPROVED	I.V.	16/06/23

MATERIAL:
FINISH:
SCALE: NEXT STAGE: 7

GE VERNOVA
650 Markland ST, Markham, ON, Canada L6C 0M1 www.gevernova.com/grid-solutions

TITLE: P14D DIRECTIONAL PHASE OVERCURRENT IED, 30TE CASE
STATUS:
SIZE: A2
DWG.NO. C154206
REV. ITR. D 3
PART NUMBER: C1542P6 REV D3
SHEET 6

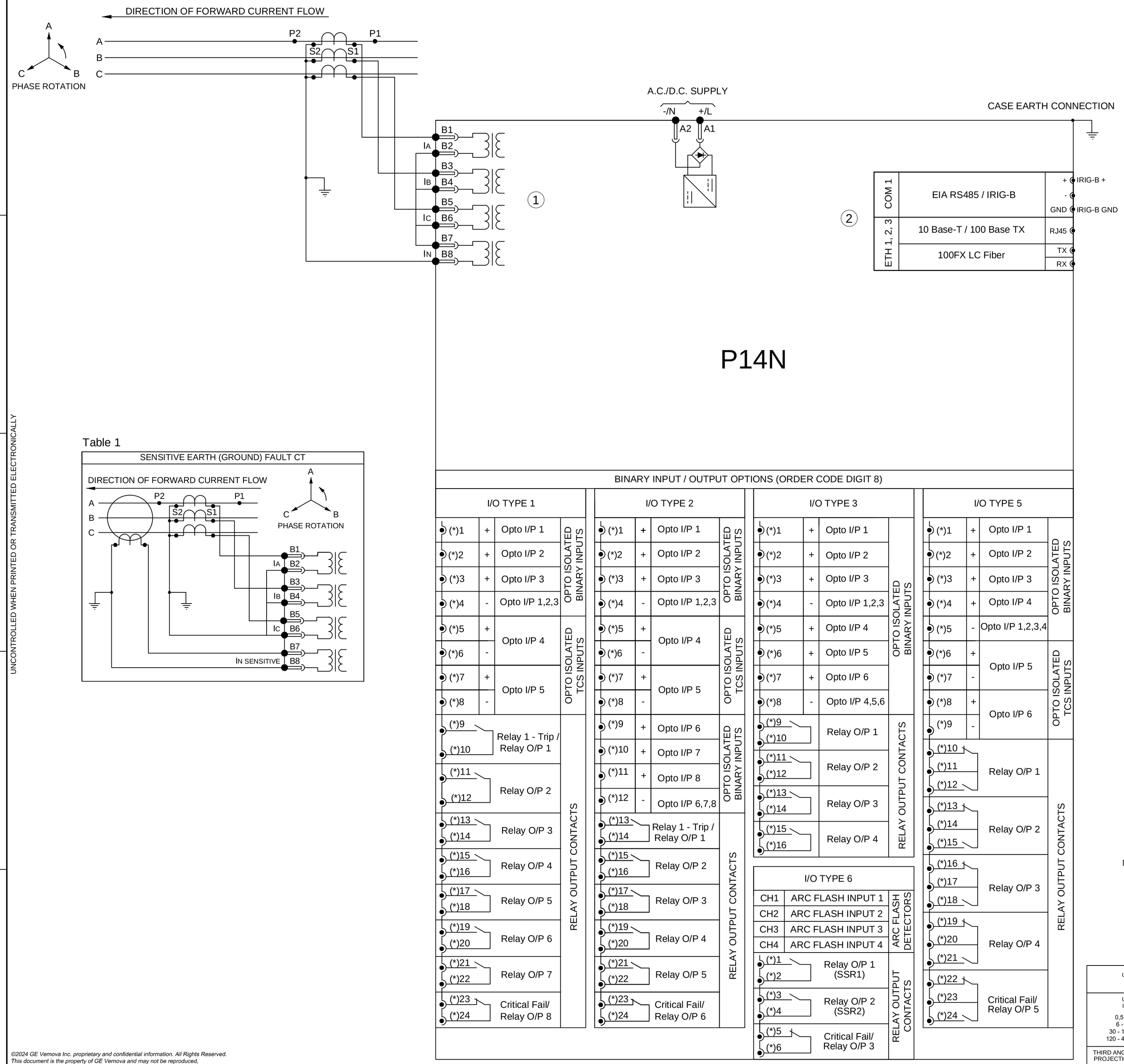

FIG. 7

REVISION HISTORY						
REV	ITR	ECO #	DD/MM/YY	DESCRIPTION	DRAWN	APPROVED
A	1	T2023060050	16/06/23	FIRST ISSUE		I.V.
B	2	T2023070064	19/07/23	GENERAL REVISION		I.M.
C	2	T2024070010	04/07/24	GENERAL REVISION		I.M.
D	2	T2025020024	14/02/2025	New cortecs added for arcflash and 339 IO boards.		I.O.
D	3	CID008690 T2025110055	24/11/2025	T option is added to table 3 and note 6 is changed to add the maximum current of outputs for I/O type 5 & 6		I.O.

Table 2

COMMUNICATIONS				
ORDER CODE DIGIT 7	COM 1	ETH1	ETH 2	ETH3
2	EIA RS485	RJ45 ENG PORT	-	-
5	EIA RS485	RJ45	-	-
6	EIA RS485	Fiber	-	-
D	EIA RS485	RJ45	RJ45	RJ45
E	EIA RS485	RJ45	Fiber	Fiber
F	EIA RS485	Fiber	Fiber	Fiber

Table 3

INPUT/OUTPUT						
		DESCRIPTION	SLOT			
			F	E	D	C
ORDER CODE DIGIT (8)	D	11 inputs (2 for Trip Circuit Supervision) + 11 outputs (NO) +1 Watchdog (NC)	I/O TYPE 1	I/O TYPE 3	NA	NA
	E	14 inputs (2 for Trip Circuit Supervision) + 9 outputs (NO) +1 Watchdog (NC)	I/O TYPE 2	I/O TYPE 3	NA	NA
	F	16 inputs (4 for Trip Circuit Supervision) + 11 outputs (10NO+1NC) + 1 Watchdog (NC)	I/O TYPE 2	NA	I/O TYPE 2	NA
	G	22 inputs (4 for Trip Circuit Supervision) + 15 outputs (14NO+1NC) + 1 Watchdog (NC)	I/O TYPE 2	I/O TYPE 3	I/O TYPE 2	NA
	H	30 inputs (6 for Trip Circuit Supervision) + 21 outputs (19NO+2NC) + 1 Watchdog (NC)	I/O TYPE 2	I/O TYPE 3	I/O TYPE 2	I/O TYPE 2
	J	24 inputs (6 for Trip Circuit Supervision) + 25 outputs (23NO+2NC) + 1 Watchdog (NC)	I/O TYPE 2	I/O TYPE 3	I/O TYPE 1	I/O TYPE 1
	K	12 inputs (2 for Trip Circuit Supervision) + 8 outputs (4NO+4C/O) + 1 Watchdog (C/O)	I/O TYPE 5	I/O TYPE 3	N/A	N/A
	L	14 inputs (4 for Trip Circuit Supervision) + 10 outputs (5NO+5C/O) + 1 Watchdog (NC)	I/O TYPE 2	N/A	I/O TYPE 5	N/A
	M	20 inputs (4 for Trip Circuit Supervision) + 14 outputs (9NO+5C/O) + 1 Watchdog (NC)	I/O TYPE 2	I/O TYPE 3	I/O TYPE 5	N/A
	P	16 inputs (4 for Trip Circuit Supervision) + 11 outputs (10NO+1NC) + 1 Watchdog (NC) (Ring terminals)	I/O TYPE 2	N/A	N/A	I/O TYPE 2
	R	22 inputs (4 for Trip Circuit Supervision) + 15 outputs (14NO+1NC) + 1 Watchdog (NC) (Ring + Pin hybrid terminals)	I/O TYPE 2	I/O TYPE 3	N/A	I/O TYPE 2
	T	4 Arc Flash point/loop sensors + 2SSR (NO) + 6 inputs + 4 outputs (NO) + 1 Watchdog (NC)	I/O TYPE 6	I/O TYPE 3	N/A	N/A
	U	4 Arc Flash point/loop sensors + 14 inputs (4 for Trip Circuit Supervision) + 13 outputs (5NO+1NC+5C/O+2SSR) + 1 Watchdog (NC)	I/O TYPE 6	N/A	I/O TYPE 5	I/O TYPE 2
	V	4 Arc Flash point/loop sensors + 20 inputs (4 for Trip Circuit Supervision) + 17 outputs (9NO+1NC+5C/O+2SSR) + 1 Watchdog (NC)	I/O TYPE 6	I/O TYPE 3	I/O TYPE 5	I/O TYPE 2
	W	4 Arc Flash point/loop sensors + 16 inputs (4 for Trip Circuit Supervision) + 14 output (10 NO+2NC+2SSR) + 1 Watchdog (NC)	I/O TYPE 6	N/A	I/O TYPE 2	I/O TYPE 2

Table 1

SENSITIVE EARTH (GROUND) FAULT CT

Notes

1. Earth fault typical CT connections (Order Code Digit 6, option 1). For Sensitive Earth Fault CT option (Order Code Digit 6, option 2) see table 1.
2. For Order Code Communication options see table 2.
3. For Order Code input/output options see table 3. N/A (not available).
4. (*) To be replaced by Slot digit (e.g. C1 for using Slot C in first input).
5. Outputs working as "Relay 1 - Trip" and "Critical Fail" only in I/O when located in Slot F.
6. Maximum continuous current supported by outputs 1, 2 and 3 of I/O type 1 and 2, outputs 1-5 of I/O type 5 and outputs 1 and 2 of I/O type 6 is 10A.
   For all other outputs of different I/O types, it is 5A.

UNCONTROLLED WHEN PRINTED OR TRANSMITTED ELECTRONICALLY

©2024 GE Vernova Inc. proprietary and confidential information. All Rights Reserved.
This document is the property of GE Vernova and may not be reproduced, transmitted, stored, or copied in whole or in part, or used to furnish information to others, without the prior written permission of GE Vernova.
GE is a trademark of General Electric Company and is used under trademark license

UNLESS OTHERWISE SPECIFIED DIMENSIONS ARE IN mm

UNLESS OTHERWISE SPECIFIED IN DRAWING TOLERANCES (mm):
0.5 - 6 ± 0.1 | 6 - 30 ± 0.2 | 30 - 120 ± 0.3 | 120 - 400 ± 0.5 | 400 - 1000 ± 0.8 | 1000 - 2000 ± 1.2 | 2000 - 4000 ± 2.0 | ANGLES: ± 1,0 DEG

	NAME	DD/MM/YY
DRAWN		
CHECKED		
APPROVED	I.V.	16/06/23
MATERIAL:		
FINISH:		
SCALE:	NEXT STAGE: 8	

THIRD ANGLE PROJECTION | CTQ (Critical to Quality) | MAJOR | INSPECTION

GE VERNOVA
650 Markland ST, Markham, ON, Canada L6C 0M1 www.gevernova.com/grid-solutions

TITLE: P14N NON-DIRECTIONAL PHASE OVERCURRENT IED, 30TE CASE

STATUS:

SIZE: A2 | DWG.NO. C154207 | REV. ITR. D 3

PART NUMBER: C1542P7 REV D3 | SHEET 7

REVISION HISTORY						
REV	ITR	ECO #	DD/MM/YY	DESCRIPTION	DRAWN	APPROVED
A	1	T2023060050	16/06/23	FIRST ISSUE		I.V.
B	2	T2023070064	19/07/23	GENERAL REVISION		I.M.
C	2	T2024070010	04/07/24	GENERAL REVISION		I.M.
D	2	T2025020024	14/02/2025	New cortecs added for arcflash and 339 IO boards.		I.O.
D	3	CID008690 T2025110055	24/11/2025	Arc flash option "U, V & W" are removed from the table 3 and thus, I/O type 6 is also removed from I/O configuration table. Note 6 is also changed to add the maximum current of outputs for I/O type 5.		I.O.

FIG. 8

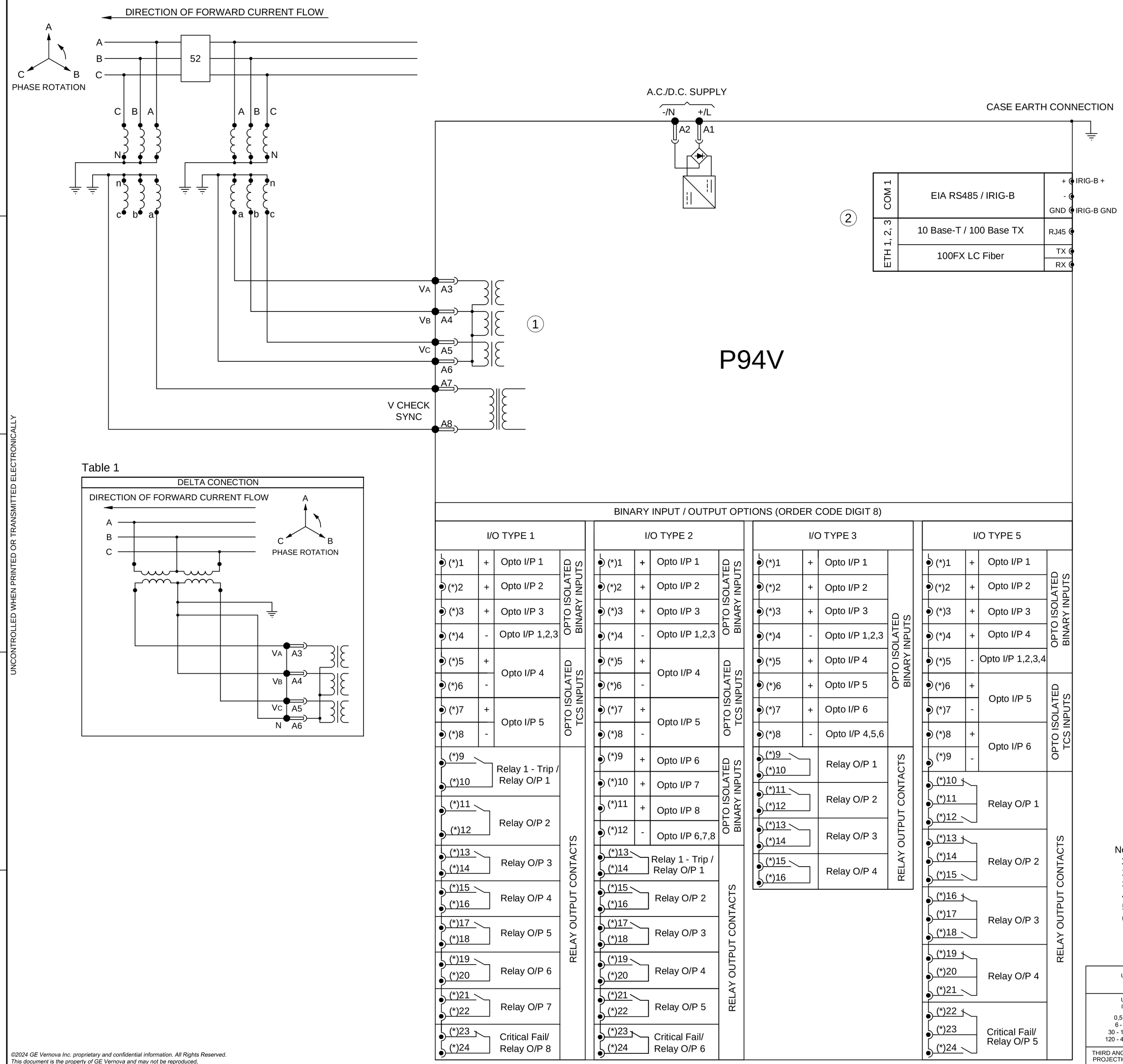

Table 1

Table 2

COMMUNICATIONS				
ORDER CODE DIGIT 7	COM 1	ETH1	ETH 2	ETH3
2	EIA RS485	RJ45 ENG PORT	-	-
5	EIA RS485	RJ45	-	-
6	EIA RS485	Fiber	-	-
D	EIA RS485	RJ45	RJ45	RJ45
E	EIA RS485	RJ45	Fiber	Fiber
F	EIA RS485	Fiber	Fiber	Fiber

Table 3

		INPUT/OUTPUT				
		DESCRIPTION	SLOT			
			F	E	D	C
ORDER CODE DIGIT (8)	D	11 inputs (2 for Trip Circuit Supervision) + 11 outputs (NO) +1 Watchdog (NC)	I/O TYPE 1	I/O TYPE 3	NA	NA
	E	14 inputs (2 for Trip Circuit Supervision) + 9 outputs (NO) +1 Watchdog (NC)	I/O TYPE 2	I/O TYPE 3	NA	NA
	F	16 inputs (4 for Trip Circuit Supervision) + 11 outputs (10NO+1NC) + 1 Watchdog (NC)	I/O TYPE 2	NA	I/O TYPE 2	NA
	G	22 inputs (4 for Trip Circuit Supervision) + 15 outputs (14NO+1NC) + 1 Watchdog (NC)	I/O TYPE 2	I/O TYPE 3	I/O TYPE 2	NA
	H	30 inputs (6 for Trip Circuit Supervision) + 21 outputs (19NO+2NC) + 1 Watchdog (NC)	I/O TYPE 2	I/O TYPE 3	I/O TYPE 2	I/O TYPE 2
	J	24 inputs (6 for Trip Circuit Supervision) + 25 outputs (23NO+2NC) + 1 Watchdog (NC)	I/O TYPE 2	I/O TYPE 3	I/O TYPE 1	I/O TYPE 1
	K	12 inputs (2 for Trip Circuit Supervision) + 8 outputs (4NO+4C/O) + 1 Watchdog (C/O)	I/O TYPE 5	I/O TYPE 3	N/A	N/A
	L	14 inputs (4 for Trip Circuit Supervision) + 10 outputs (5NO+5C/O) + 1 Watchdog (NC)	I/O TYPE 2	N/A	I/O TYPE 5	N/A
	M	20 inputs (4 for Trip Circuit Supervision) + 14 outputs (9NO+5C/O) + 1 Watchdog (NC)	I/O TYPE 2	I/O TYPE 3	I/O TYPE 5	N/A
	P	16 inputs (4 for Trip Circuit Supervision) + 11 outputs (10NO+1NC) + 1 Watchdog (NC) (Ring terminals)	I/O TYPE 2	N/A	N/A	I/O TYPE 2
	R	22 inputs (4 for Trip Circuit Supervision) + 15 outputs (14NO+1NC) + 1 Watchdog (NC) (Ring + Pin hybrid terminals)	I/O TYPE 2	I/O TYPE 3	N/A	I/O TYPE 2

Notes
1. Wye VT typical connections. For Delta connections see table 1.
2. For Order Code Communication options see table 2.
3. For Order Code input/output options see table 3. N/A (not available).
4. (*) To be replaced by Slot digit (e.g. C1 for using Slot C in first input).
5. Outputs working as "Relay 1 - Trip" and "Critical Fail" only in I/O when located in Slot F.
6. Maximum continuous current supported by outputs 1, 2 and 3 of I/O type 1 and 2 and outputs 1-5 of I/O type 5 is 10A.
   For all other outputs of different I/O types, it is 5A.

UNCONTROLLED WHEN PRINTED OR TRANSMITTED ELECTRONICALLY

©2024 GE Vernova Inc. proprietary and confidential information. All Rights Reserved.
This document is the property of GE Vernova and may not be reproduced, transmitted, stored, or copied in whole or in part, or used to furnish information to others, without the prior written permission of GE Vernova.
GE is a trademark of General Electric Company and is used under trademark license

UNLESS OTHERWISE SPECIFIED DIMENSIONS ARE IN mm		NAME	DD/MM/YY
	DRAWN		
UNLESS OTHERWISE SPECIFIED IN DRAWING TOLERANCES (mm): 0,5 - 6 ± 0,1; 6 - 30 ± 0,2; 30 - 120 ± 0,3; 120 - 400 ± 0,5; 400 - 1000 ± 0,8; 1000 - 2000 ± 1,2; 2000 - 4000 ± 2,0; ANGLES: ± 1,0 DEG	CHECKED		
	APPROVED	I.V.	16/06/23
	MATERIAL:		
THIRD ANGLE PROJECTION	CTQ (Critical to Quality)		
	MAJOR	INSPECTION	
	FINISH:		
	SCALE:	NEXT STAGE: 9	

GE VERNOVA
650 Markland ST. Markham, ON, Canada L6C 0M1 www.gevernova.com/grid-solutions

TITLE: P94V VOLTAGE & FREQUENCY IED, 30TE CASE

STATUS:

SIZE: A2 | DWG.NO. C154208 | REV. ITR. D 3

PART NUMBER: C1542P8 REV D3 | SHEET 8

APPENDIX D

I/O POPULATION - TYPE OF BOARDS (USAGE AND CONFIGURATION)

Tables containing a full list of settings for each model, are provided in a separate Excel file attached as an embedded resource. To access the spreadsheet file click on the button below.

Note:
An Open File dialogue box may open with a warning message about potential harm from programs, macros or viruses. The file supplied does not contain any harmful content, and may be safely opened.

IO Population

APPENDIX E

COMPATIBILITY MODE TABLES

Tables containing a list of the addresses supported in compatibility mode for compatible products are provided in a separate Excel file attached as an embedded resource. To access the spreadsheet file click on the button below:

Note:
An Open File dialogue box may open with a warning message about potential harm from programs, macros or viruses. The file supplied does not contain any harmful content, and may be safely opened.

Compatibility Mode Tables

GE VERNOVA

© 2025 GE Vernova. All rights reserved. Information contained in this document is indicative only. No representation or warranty is given or should be relied on that it is complete or correct or will apply to any particular project. This will depend on the technical and commercial circumstances. It is provided without liability and is subject to change without notice. Reproduction, use or disclosure to third parties, without express written authority, is strictly prohibited.