GE VERNOVA

8 Series 889

Instruction Manual

Generator Protection System

Hardware Version: B
Firmware Version: 3.00
Publication Reference: 889-1601-0320-B300-2

Copyright statement

Copyright © 2024 GE Vernova. All rights reserved.

EnerVista, *EnerVista Launchpad*, and *EnerVista D&I Setup software* are registered trademarks of GE Vernova.

The contents of this manual are the property of GE Vernova. This documentation is furnished on license and may not be reproduced in whole or in part without the permission of GE Vernova. The content of this manual is for informational use only and is subject to change without notice.

Disclaimer

It is the responsibility of the user to verify and validate the suitability of all GE Vernova products. This equipment must be used within its design limits. The proper application including the configuration and setting of this product to suit the power system assets, is the responsibility of the user, who is also required to ensure that all local or regional safety guidelines are adhered to. Incorrect application of this product could risk damage to property, the environment, personal injuries or fatalities and it is the sole responsibility of the person/entity applying and qualifying the product for use.

The content of this document has been developed to provide guidance to properly install, configure and maintain this product for its intended applications. This guidance is not intended to cover every possible contingency that may arise during commissioning, operation, service, or maintenance activities. Should you encounter any circumstances not clearly addressed in this document, please contact your local GE service site.

It is the sole responsibility of the user to secure their network and associated devices against cybersecurity intrusions or attacks. GE Vernova and its affiliates are not liable for any damages or losses arising from or related to such security intrusion or attacks.

The information contained in this document is subject to change without notice.

Warranty

For products shipped as of 1 October 2013, GE Vernova Grid Solutions warrants most of its GE-manufactured products for 10 years.

For warranty details including any limitations and disclaimers, see the Terms and Conditions at http://www.gegridsolutions.com/multilin/warranty.htm

For products shipped before 1 October 2013, the standard 24-month warranty applies.

Major changes

For information on the updates included in this release of the manual, please refer to the latest release notes.

Open source licenses

The optional IEC 61850-9-2LE/IEC 61869 Process Bus Modules include open source code. See the UR-OpenSourceLicense folder installed at the root level with the software, such as at C:\Program Files (x86)\GE Power Management\URPC\

Contents

Chapter 1 Introduction 1

1.1 Chapter Overview 2
1.2 Foreword 3
1.2.1 Target Audience 3
1.2.2 Typographical conventions 3
1.2.3 Nomenclature 4
1.3 Product overview 5
1.4 General description of the 8 Series 6
1.5 Functions and features 8
1.6 Security Overview 12
1.7 Order Codes 14
1.8 Cautions, warnings and notes 18
1.8.1 Safety words and definitions 18
1.8.2 General Cautions and Warnings 18
1.9 Must-read Information 21
1.9.1 Storage 21
1.10 For Further Assistance 22
1.10.1 Repairs 22

Chapter 2 Installation 23

2.1 Chapter Overview 24
2.2 Product Identification 25
2.3 Dimensions 26
2.4 Mounting 27
2.4.1 Standard Panel Mount 27
2.5 Draw-out Unit Withdrawal and Insertion 32
2.6 Removable Power Supply 34
2.7 Removable Magnetic Module 35
2.8 Remote Module I/O (RMIO) 38
2.9 IP20 Back Cover 40
2.10 Arc Flash Sensor 41
2.11 Physical considerations of wiring 44
2.11.1 Terminal Strip Types 45
2.11.2 Wire Size 46
2.12 Terminal connections 47
2.12.1 General connections 48
2.13 Terminal Identification 50
2.14 RMIO Module Installation 52
2.15 Phase Sequence and Transformer Polarity 54
2.16 Zero-Sequence CT Installation 58
2.17 Voltage Inputs 59
2.18 Control Power 60
2.19 Contact Inputs 61
2.20 Output Relays 63
2.21 Serial Communications 66
2.22 IRIG-B 67
2.23 Typical Wiring Diagrams 68

Chapter 3 Interfaces 69

3.1 Chapter Overview 70
3.2 First access 71

3.3 Front panel options 72
3.3.1 Graphical Display Pages 74
3.3.1.1 Menu hierarchy 75
3.3.1.2 Working with Graphical Display Pages 76
3.3.1.3 Single Line Diagram 78
3.3.2 Three-pushbutton front panel LEDs 80
3.3.3 Home screen icons 82
3.3.4 Relay Messages 83
3.3.4.1 Target Messages 83
3.3.4.2 Self-test errors 83
3.3.4.3 Out of Service 87
3.3.4.4 Flash Messages 87
3.3.5 Label Removal 87
3.4 Software Interface 89
3.4.1 EnerVista D&I Setup software 89
3.4.1.1 Hardware & Software Requirements 89
3.4.1.2 Installing EnerVista D&I Setup software 89
3.4.1.3 Upgrading EnerVista D&I Setup software 90
3.4.2 Connecting EnerVista D&I Setup software to the relay 90
3.4.2.1 Using the Quick Connect Feature 90
3.4.2.2 Configuring Ethernet Communications 90
3.4.2.3 Connecting to the Relay 91
3.4.2.4 Configuring USB Address 91
3.4.3 Working with Setpoints 93
3.4.3.1 Entering Setpoints 93
3.4.3.2 Using Setpoint Files 95
3.4.3.3 Downloading and saving Setpoint files 96
3.4.3.4 Adding Setpoint files to the environment 96
3.4.3.5 Creating a new Setpoints file 96
3.4.3.6 Upgrading Setpoint files to a new revision 97
3.4.3.7 Printing Setpoints 97
3.4.3.8 Printing values from a connected device 97
3.4.3.9 Loading Setpoints from a File 98
3.4.3.10 Uninstalling files and clearing data 98
3.4.4 Quick Setup 98
3.4.5 Upgrading relay firmware 99
3.4.5.1 Loading new relay firmware 99
3.4.6 SLD Configurator 100
3.4.6.1 Control Objects 101
3.4.6.2 Status Objects 103
3.4.6.3 Metering Objects 103
3.4.6.4 Device Status Object 104
3.4.6.5 Static Objects 104
3.4.6.6 Front Panel Interaction 104
3.4.7 FlexCurve Editor 106
3.4.8 Transient Recorder (Waveform Capture) 107
3.4.9 Protection Summary 110
3.4.10 FlexLogic Favourites 111
3.4.11 Offline Settings File Conversion 111
3.4.11.1 Converting legacy files 111
3.4.11.2 Conversion Summary Report 112
3.4.11.3 Results Window 112

Chapter 4 About Setpoints 115

4.1 Chapter Overview 116
4.2 About Setpoints 117
4.3 Setpoints Entry Methods 118

4.4 Common Setpoints 119
4.5 Logic Diagrams 121

Chapter 5 Device Setpoints 123

5.1 Chapter Overview 124
5.2 Device menu hierarchy 125
5.3 Custom Configuration 126
5.4 Real-time Clock 129
5.4.1 PTP Configuration 129
5.4.2 Clock 131
5.4.3 SNTP Protocol 132
5.5 Security 134
5.5.1 Basic Security 135
5.5.2 CyberSentry 137
5.6 Communications 144
5.6.1 General communications setup 144
5.6.2 Modbus Protocol 144
5.6.3 Modbus configurable parameters 145
5.6.4 RS485 146
5.6.5 Wi-Fi 147
5.6.6 Wi-Fi Quick Start Procedure 149
5.6.7 USB 150
5.6.8 Ethernet Ports 150
5.6.8.1 Network Settings Menu 151
5.6.9 Routing 152
5.6.10 DNP Protocol settings 155
5.6.11 DNP and IEC104 point lists 157
5.6.12 IEC60870-5-104 160
5.6.13 IEC60870-5-103 162
5.6.14 IEC 61850 162
5.6.14.1 IEC61850 Configurator 162
5.6.15 Remote Modbus Device 164
5.6.15.1 Remote Modbus Device Editor 165
5.6.16 SNMP 167
5.6.16.1 SNMP MIB 169
5.7 Transient Recorder 173
5.8 Data Logger 175
5.9 Fault Reports 178
5.10 Event Data 180
5.11 Flex states 181
5.12 Front Panel 182
5.12.1 Programmable LEDs 182
5.12.2 Programmable Pushbuttons 183
5.12.3 Tab Pushbuttons 189
5.12.4 Annunciator 192
5.12.5 Display Properties 196
5.12.5.1 Support for Cyrillic languages 197
5.12.6 Default Screens 197
5.12.7 Home Screens 198
5.12.8 FlexScreens 199
5.13 Resetting 201
5.14 Installation 202
5.15 Self-test errors 204
5.16 Clear Records 209

Chapter 6 System Setpoints 211

6.1 Chapter Overview 212
6.2 System menu hierarchy 213
6.3 Current Sensing 214
6.4 Voltage sensing 216
6.5 Power Sensing 218
6.6 Power System 219
6.7 Generator Setup 220
6.8 Transformer 221
6.9 Breakers 222
6.10 Switches 225
6.11 FlexCurves 229

Chapter 7 Input and Output Setpoints 233

7.1 Chapter Overview 234
7.2 Inputs 235
7.2.1 Contact Inputs 235
7.2.2 Virtual Inputs 238
7.2.3 Analog Inputs 240
7.2.4 Remote Inputs 245
7.3 Outputs 246
7.3.1 Output Relays 246
7.3.1.1 Relay selected for breaker Trip 247
7.3.1.2 Relay selected for breaker close 248
7.3.1.3 Auxiliary Output Relays 249
7.3.1.4 Critical failure relay 251
7.3.2 Virtual Outputs 251
7.3.3 Analog Outputs 252

Chapter 8 Protection 255

8.1 Chapter Overview 256
8.2 Protection 257
8.3 Generator Elements Overview 258
8.3.1 Percent Differential 258
8.3.1.1 Saturation detector 262
8.3.2 Overall Percent Differential 264
8.3.3 Generator Unbalance (46) 275
8.3.4 Inadvertent Energization (50/27) 279
8.3.5 Loss of Excitation (40) 282
8.3.6 Third Harmonic Neutral Undervoltage (27TN) 286
8.3.7 Third Harmonic Voltage Difference 289
8.3.8 Offline Overcurrent (50OFL) 294
8.3.9 Overload Alarm 297
8.4 Current elements overview 298
8.4.1 Inverse Time Overcurrent Curves 298
8.4.2 Phase Time Overcurrent Protection (51P) 306
8.4.3 Phase Instantaneous Overcurrent Protection (50P) 310
8.4.4 Phase Directional Overcurrent Protection (67P) 314
8.4.5 Neutral Time Overcurrent Protection (51N) 317
8.4.6 Neutral Instantaneous Overcurrent Protection (50N) 320
8.4.7 Neutral Directional Overcurrent Protection (67N) 323
8.4.8 Ground Time Overcurrent Protection (51G) 329
8.4.9 Ground Instantaneous Overcurrent Protection (50G) 331
8.4.10 Ground Directional Overcurrent Protection (67G) 334

8.4.11 Sensitive Ground Time Overcurrent Protection (51SG) 336
8.4.12 Sensitive Ground Instantaneous Overcurrent Protection (50SG) 340
8.4.13 Sensitive Ground Directional Overcurrent Protection (67SG) 343
8.4.14 Restricted Ground Fault (87G) 347
8.4.15 Negative Sequence Instantaneous Overcurrent Protection (50_2) 353
8.4.16 Negative Sequence Directional Overcurrent Protection (67_2) 356
8.4.17 Switch on to Fault (SOTF) 359
8.4.18 Broken Conductor 362
8.4.19 Undercurrent (37) 365
8.4.20 Thermal Overload (49) 368
8.5 Voltage elements overview 372
8.5.1 Undervoltage Curves 372
8.5.2 Phase Reversal (47) 373
8.5.3 Phase Undervoltage Protection (27P) 375
8.5.4 Auxiliary Undervoltage (27X) 377
8.5.5 Phase Overvoltage Protection (59P) 379
8.5.6 Auxiliary Overvoltage Protection (59X) 383
8.5.7 Neutral Overvoltage Protection (59N) 386
8.5.8 Negative Sequence Overvoltage Protection (59_2) 389
8.5.9 Volts per Hertz (24) 392
8.6 Impedance elements 398
8.6.1 Out-of-step (78) 398
8.7 Power elements 404
8.7.1 Directional Power (32) 404
8.7.2 Reactive Power (40Q) 408
8.8 Frequency elements 412
8.8.1 Underfrequency (81U) 412
8.8.2 Overfrequency (81O) 414
8.8.3 Frequency Rate of Change (81R) 417

Chapter 9 Monitoring 423

9.1 Chapter Overview 424
9.2 Monitoring Overview 425
9.3 Generator Monitoring 426
9.3.1 Running Hours 426
9.3.2 Frequency Out-of-band Accumulation (81A) 428
9.3.3 Thermal Overload Protection (49TOL) 430
9.3.4 Speed 435
9.4 Breaker monitoring 440
9.4.1 Trip and Close Circuit Monitoring 440
9.4.2 Breaker Arcing Current 445
9.4.3 Breaker Health 448
9.5 Functions 453
9.5.1 Demand 453
9.5.1.1 Current Demand 454
9.5.1.2 Real Power Demand 455
9.5.1.3 Reactive Power 457
9.5.1.4 Apparent Power Demand 459
9.5.2 Pulsed Outputs 461
9.5.3 Digital Counters 464
9.6 Harmonic Detection 468
9.7 Resistance Temperature Detector Functions 471
9.7.1 RTD Temperature 471
9.7.2 RTD Trouble 475
9.8 Loss of Communications 477

Chapter 10 Control 479

10.1 Chapter Overview 480
10.2 Control Overview 481
10.3 Setpoint Group 482
10.4 Generator control 484
10.4.1 Field Breaker Discrepancy 484
10.4.2 Sequential Shutdown 486
10.5 Local Control Mode (Breaker and Switches) 489
10.6 Breaker Control 497
10.7 Switch Control (89) 501
10.8 Virtual Input Control 504
10.9 Trip Bus 505
10.10 Breaker Failure (50BF) 508
10.10.1 Breaker Failure Setup 509
10.10.2 Initiate 512
10.11 Arc Flash Protection 514
10.12 Synchrocheck (25) 517
10.13 VT Fuse Failure (VTFF) 522
10.13.1 VT Fuse Failure settings 522

Chapter 11 Flexlogic 525

11.1 Chapter Overview 526
11.2 FlexLogic 527
11.2.1 Timers 530
11.2.2 Non-volatile Latches 531
11.2.3 FlexLogic Equation 531
11.2.4 Viewing FlexLogic Graphics 533
11.2.5 FlexElements 534
11.2.5.1 FlexElement settings 535
11.2.5.2 FlexElements - Examples 538

Chapter 12 Testing 543

12.1 Chapter Overview 544
12.2 Testing display hierarchy 545
12.3 Simulation 546
12.3.1 Simulation Setup 546
12.3.2 Simulation Pre-Fault 547
12.3.3 Simulation Fault 548
12.3.4 Simulation Post-Fault 548
12.4 Test LEDs 550
12.5 Contact Inputs 551
12.6 Output Relays 552
12.7 GOOSE 553

Chapter 13 Status 555

13.1 Chapter Overview 556
13.2 Summary 557
13.3 Generator status 560
13.4 Breaker status 562
13.5 Information 563
13.6 Communications status 566
13.6.1 GOOSE 566
13.6.2 Communications Status settings 566

13.7 Other status settings 570

Chapter 14 Metering 575

14.1 Chapter Overview 576
14.2 Metering Overview 577
14.3 Metering Summary 580
14.4 Generator functions 581
14.4.1 Percent Differential Current 581
14.4.2 Overall Differential Current 581
14.4.3 Speed 582
14.4.4 Frequency OOB Accumulation 582
14.4.5 Stator Ground 3rd Harmonic 583
14.5 Impedance/admittance 584
14.5.1 Positive Sequence impedance 584
14.6 Currents 585
14.7 Voltages 587
14.8 Frequency 590
14.8.1 Volts Per Hertz 591
14.9 Harmonics 592
14.9.1 Harmonic Detection 592
14.10 Synchrocheck 593
14.11 Power functions 594
14.11.1 Power 594
14.11.2 Power Factor 596
14.11.3 Directional Power 597
14.12 Energy 598
14.12.1 Energy (X) 598
14.12.2 Energy Log 598
14.13 Demand 601
14.13.1 Current Demand 601
14.13.1.1 Current Demand 1(X) 601
14.14 Power Demand 602
14.15 Arc Flash 603
14.16 Resistance Temperature Detectors 604
14.17 Analog Inputs 605
14.18 FlexElements 606

Chapter 15 Records 607

15.1 Chapter Overview 608
15.2 Events 609
15.2.1 Event Viewer 609
15.3 Transient Records 613
15.4 Fault Reports 614
15.5 Data Logger 616
15.6 Breakers 617
15.6.1 Breaker Arcing Current 617
15.6.2 Breaker Health 617
15.7 Digital Counters 619
15.8 Remote Modbus Device 620
15.9 Clear Records 623

Chapter 16 Maintenance 625

16.1 Chapter Overview 626
16.2 Environmental Health Report 627

16.3 General Maintenance 629
16.3.1 In-service Maintenance 629
16.3.2 Out-of-service Maintenance 629
16.3.3 Unscheduled Maintenance (System Interruption) 629

Chapter 17 Specifications 631

17.1 Device 632
17.1.1 Annunciator panel 632
17.1.2 Custom configurations 632
17.2 Protection elements 633
17.2.1 Thermal overload protection 633
17.2.2 Percent differential (87G) 633
17.2.3 Overall percent differential 633
17.2.4 Generator unbalance 634
17.2.5 Inadvertent energization 634
17.2.6 Third harmonic neutral undervoltage 634
17.2.7 Third harmonic voltage difference 635
17.2.8 Offline overcurrent 635
17.2.9 Current unbalance (46) 635
17.2.10 Speed protection 636
17.2.11 Loss of excitation (40) 636
17.2.12 Out-of-step (78) 636
17.2.13 Overload alarm 637
17.2.14 Phase reversal (47) 637
17.2.15 Phase/Neutral/Ground Instantaneous Overcurrent (50P/N/G) 637
17.2.16 Phase/neutral/ground time overcurrent (51P/N/G) 637
17.2.17 Phase directional overcurrent (67P) 638
17.2.18 Neutral directional overcurrent (67N) 638
17.2.19 Ground directional overcurrent (67G) 639
17.2.20 Negative sequence instantaneous overcurrent 639
17.2.21 Sensitive ground directional overcurrent (67SG) 639
17.2.22 Sensitive Ground time overcurrent (51SG) 640
17.2.23 Phase overvoltage (59P) 641
17.2.24 Neutral overvoltage (59N) 641
17.2.25 Auxiliary overvoltage (59X) 641
17.2.26 Negative sequence overvoltage (59_2) 642
17.2.27 Phase undervoltage (27P) 642
17.2.28 Volts per Herz (24) 643
17.2.29 Overfrequency (81O) 643
17.2.30 Underfrequency (81U) 643
17.2.31 Rate of change of frequency (81R) 644
17.2.32 Directional power 644
17.2.33 Reactive power (40Q) 645
17.2.34 RTD protection 645
17.2.35 Arc flash HS phase/ground instantaneous overcurrent (50P/50G) 645
17.3 Control 646
17.3.1 Field breaker discrepancy 646
17.3.2 Sequential shutdown 646
17.3.3 Synchrocheck 646
17.3.4 Breaker control 646
17.3.5 Local control mode 646
17.3.6 Switch control 647
17.3.7 Trip bus 647
17.4 Monitoring 648
17.4.1 Frequency OOB Accumulation 648

17.4.2	Breaker arcing current	648
17.4.3	Breaker failure	648
17.4.4	Breaker health	648
17.4.5	Trip circuit monitoring	649
17.4.6	Close circuit monitoring	649
17.4.7	Demand	649
17.4.8	Harmonic detection	649
17.5	**Recording**	**650**
17.5.1	Transient recorder	650
17.5.2	Data logger	650
17.5.3	Event recorder	650
17.5.4	Last trip data	650
17.5.5	Fault reports	651
17.6	**User-programmable elements**	**652**
17.6.1	FlexLogic	652
17.6.2	FlexElements	652
17.6.3	FlexStates	652
17.6.4	FlexCurves	652
17.6.5	Non-volatile latches	653
17.6.6	User-programmable LEDs	653
17.6.7	Tab pushbuttons	653
17.6.8	User-programmable pushbuttons	653
17.7	**Metering**	**654**
17.7.1	RMS parameters	654
17.7.2	Phasors	655
17.7.3	Frequency	655
17.7.4	Current and voltage harmonics	655
17.8	**Inputs**	**656**
17.8.1	AC currents	656
17.8.2	AC voltages	656
17.8.3	Analog inputs	656
17.8.4	Input frequency	656
17.8.5	Arc flash sensor/fiber	657
17.8.6	Contact Inputs	657
17.8.7	IRIG-B input	657
17.8.8	RTD inputs	658
17.9	**Outputs**	**659**
17.9.1	Analog outputs	659
17.9.2	Form C output relays	659
17.9.3	Form A voltage monitor	660
17.9.4	Solid state relays	660
17.9.5	Pulsed outputs	660
17.9.6	Coil actuator outputs	660
17.10	**Power supply**	**662**
17.10.1	Voltage supplies	662
17.10.2	Power consumption	662
17.10.3	Voltage loss ride-through	662
17.11	**Communications**	**663**
17.11.1	Ethernet	663
17.11.2	USB	663
17.11.3	Serial	663
17.11.4	WiFi	664
17.11.5	Remote Modbus	664
17.11.6	Controller Area Network	664
17.12	**Certifications and approvals**	**665**
17.12.1	Approvals	665

17.12.2 Testing and Certification 665
17.13 Environmental 667
17.14 Long-term storage 668

Appendix A Appendix A 669

1 Warranty 670
2 Revision History 671

CHAPTER 1

INTRODUCTION

1.1 CHAPTER OVERVIEW

This chapter provides some general information about the technical manual and an introduction to the device(s) described in this technical manual.

This chapter contains the following sections:

Chapter Overview	2
Foreword	3
Product overview	5
General description of the 8 Series	6
Functions and features	8
Security Overview	12
Order Codes	14
Cautions, warnings and notes	18
Must-read Information	21
For Further Assistance	22

1.2 FOREWORD

This technical manual provides a functional and technical description of the relay, as well as a comprehensive set of instructions for using it. The level at which this manual is written assumes that you are already familiar with protection engineering and have experience in this discipline. The description of principles and theory is limited to that which is necessary to understand the product. For further details on general protection engineering theory, we refer you to the publication, Protection and Automation Application Guide, which is available online.

We have attempted to make this manual as accurate, comprehensive and user-friendly as possible. However we cannot guarantee that it is free from errors. Nor can we state that it cannot be improved. We would therefore be very pleased to hear from you if you discover any errors, or have any suggestions for improvement. Our policy is to provide the information necessary to help you safely specify, engineer, install, commission, maintain, and eventually dispose of this product. We consider that this manual provides the necessary information, but if you believe that more details are needed, please contact us.

1.2.1 TARGET AUDIENCE

This manual is aimed towards all professionals charged with installing, commissioning, maintaining, troubleshooting, or operating any of the products within the specified product range. This includes installation and commissioning personnel as well as engineers who will be responsible for operating the product.

The level at which this manual is written assumes that installation and commissioning engineers have knowledge of handling electronic equipment. Also, system and protection engineers have a thorough knowledge of protection systems and associated equipment.

1.2.2 TYPOGRAPHICAL CONVENTIONS

The following typographical conventions are used throughout this manual.

- Description of software menu items, buttons, labels or hardware keys and buttons written in bold type and colored dark blue.
  For example: Select **Save** from the file menu
- The names for special keys, appear in in upper case bold type and colored dark blue.
  For example: **ENTER**
- Filenames, paths, code, and text that appears on a command line interface use the courier font
  For example: `Example\File.text`
- Special terminology is written with leading capitals
  For example: Line Differential Relay
- If reference is made to the relay's internal settings database on the relay's LCD screen, the menu items are written in bold italics
  For example: ***SECURITY*** (on the relay's LCD screen), or ***Security*** (in the EnerVista D&I Setup software software)
- Menu paths are shown with **>** separators. this applies to both software menu paths and relay menu paths
  For example: ***SETTINGS > SYSTEM SETUP > AC INPUTS*** (for relay path), or **File > Save** (for software path)
- Setting values are written with the courier font and are italicized
  For example: *`Enabled`*

- Multilin products, use Flexlogic operands. Flexlogic operands are written in light blue uppercase courier font For example: PUSHBUTTON 1 ON
- Sometimes it is beneficial to emphasize some words. Depending on the case in question, this may be done with bold, italic or upper case font attributes.
- Notes are written in italic in, and are surrounded by a border.
  For example:

Note:
This is a note

1.2.3 NOMENCLATURE

Due to the technical nature of this manual, many special terms, abbreviations and acronyms are used throughout the manual. Some of these terms are well-known industry-specific terms while others may be special product-specific terms used by GE Grid Solutions. The first instance of any acronym or term used in a particular chapter is explained. In addition, a separate glossary is available on the GE Grid Solutions website.

We would like to highlight the following changes of nomenclature however:

- The word *relay* and *IED* (Intelligent Electronic Device) are both used to describe the protection device. The term *IED* is associated with the IEC61850 standard, whereas the term *relay* is the long-used traditional term. It may also be referred to simply as the *device* or the *product*.
- American English and spelling is used throughout this manual.
- The term 'Earth' and American term 'Ground' are equivalent. You may find either used in the manual.
- When depicting a generic instance of a number of items, this manual uses <n> where n can be any integer.

1.3 PRODUCT OVERVIEW

The Multilin 889 is a microprocessor-based unit intended for the primary protection of small, medium and large sized generators. Base relay models provide standard generator protection functions plus a number of current and voltage based backup functions.

1.4 GENERAL DESCRIPTION OF THE 8 SERIES

Each relay provides protection, control, and monitoring functions with both local and remote human interfaces. They also display the present trip/alarm conditions, and most of the more than 35 measured system parameters. Recording of past trip, alarm or control events, maximum demand levels, and energy consumption is also performed.

To meet diverse utility standards and industry requirements, you can program these relays to meet specific requirements. This flexibility will naturally make a piece of equipment difficult to learn. To aid new users in getting basic protection operating quickly, setpoints are set to typical default values and advanced features are disabled. You can reprogram these settings any time.

It is possible for you to program these relays using the front panel keys and display. However, due to the numerous settings, this manual method can be laborious. To simplify programming and provide a more intuitive interface, you can enter setpoints with a PC running the EnerVista D&I Setup software. Even with minimal computer knowledge, this menu-driven software provides easy access to all front panel functions. Actual values and setpoints can be displayed, altered, stored, and printed. If settings are stored in a setpoint file, they can be downloaded at any time to the front panel program port of the relay via a computer cable connected to the USB port of any personal computer.

CPU

Relay functions are controlled by two processors: a Freescale MPC5125 32-bit microprocessor that measures all analog signals and digital inputs and controls all output relays, and a Freescale MPC8358 32-bit microprocessor that controls all the advanced Ethernet communication protocols.

Analog Input and Waveform Capture

Magnetic transformers are used to scale-down the incoming analog signals from the source instrument transformers. The analog signals are then passed through a 11.5 kHz low pass analog anti-aliasing filter. All signals are then simultaneously captured by sample and hold buffers to ensure there are no phase shifts. The signals are converted to digital values by a 16-bit A/D converter before finally being passed on to the CPU for analysis.

The raw samples are scaled in software, then placed into the waveform capture buffer, thus emulating a fault recorder. The waveforms can be retrieved from the relay via the software for display and diagnostics.

Frequency

Frequency measurement is accomplished by measuring the time between zero crossings of the composite signal of three-phase bus voltages, line voltage or three-phase currents. The signals are passed through a low pass filter to prevent false zero crossings. Frequency tracking utilizes the measured frequency to set the sampling rate for current and voltage which results in better accuracy for the Discrete Fourier Transform (DFT) algorithm for off-nominal frequencies.

The main frequency tracking source uses three-phase bus voltages. The frequency tracking is switched automatically by an algorithm to the alternative reference source, i.e., three-phase currents signal or line voltage for the configuration of tie-breaker, if the frequency detected from the three-phase voltage inputs is declared invalid. The switching will not be performed if the frequency from the alternative reference signal is detected invalid. Upon detecting valid frequency on the main source, the tracking will be switched back to the main source. If a stable frequency signal is not available from all sources, then the tracking frequency defaults to the nominal system frequency.

Phasors, Transients, and Harmonics

All waveforms are processed eight times every cycle with a DC decaying removal filter and a DFT. The resulting phasors have fault current transients and all harmonics removed. This results in an overcurrent relay that is extremely secure and reliable and one that will not overreach.

Processing of AC Current Inputs

The DC Decaying Removal Filter is a short window digital filter, which removes the DC decaying component from the asymmetrical current present at the moment a fault occurs. This is done for all current signals used for overcurrent protection; voltage signals use the same DC Decaying Removal Filter. This filter ensures no overreach of the overcurrent protection.

The DFT uses exactly one cycle of samples to calculate a phasor quantity which represents the signal at the fundamental frequency; all harmonic components are removed. All subsequent calculations (e.g. power, etc.) are based upon the current and voltage phasors, such that the resulting values have no harmonic components. RMS (root mean square) values are calculated from one cycle of samples prior to filtering.

Protection Elements

All voltage, current and frequency protection elements are processed eight times every cycle to determine if a pickup has occurred or a timer has expired. The voltage and current protection elements use RMS current/voltage, or the magnitude of the phasor.

1.5 FUNCTIONS AND FEATURES

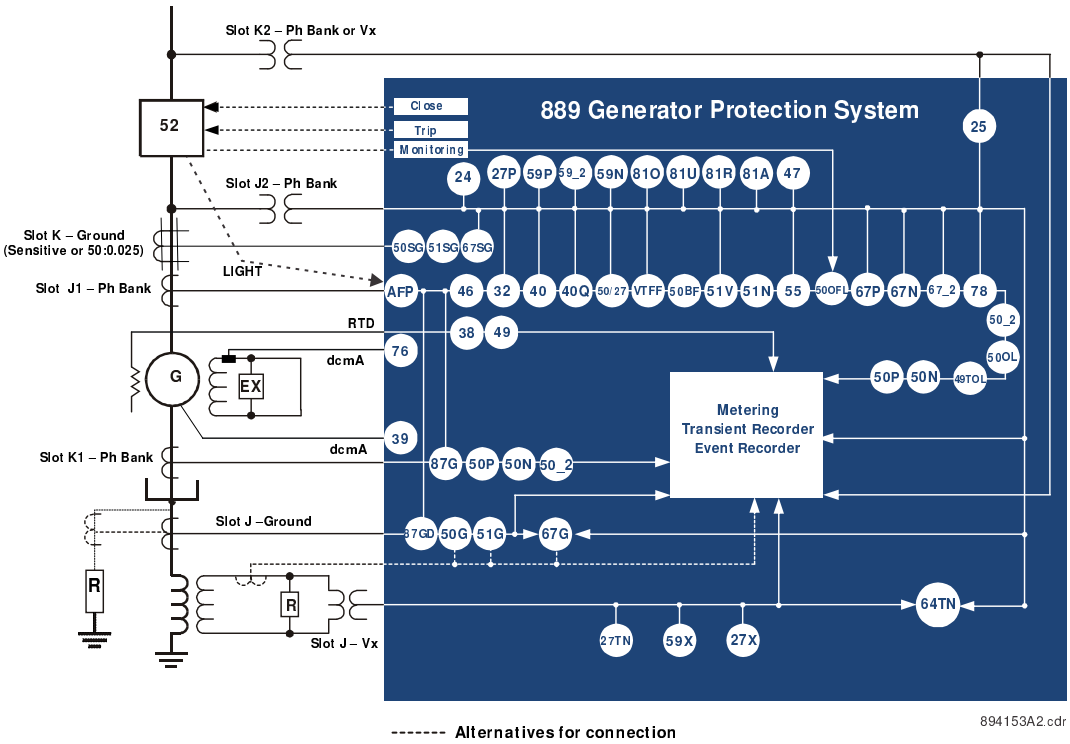

Figure 1: Single Line Diagram

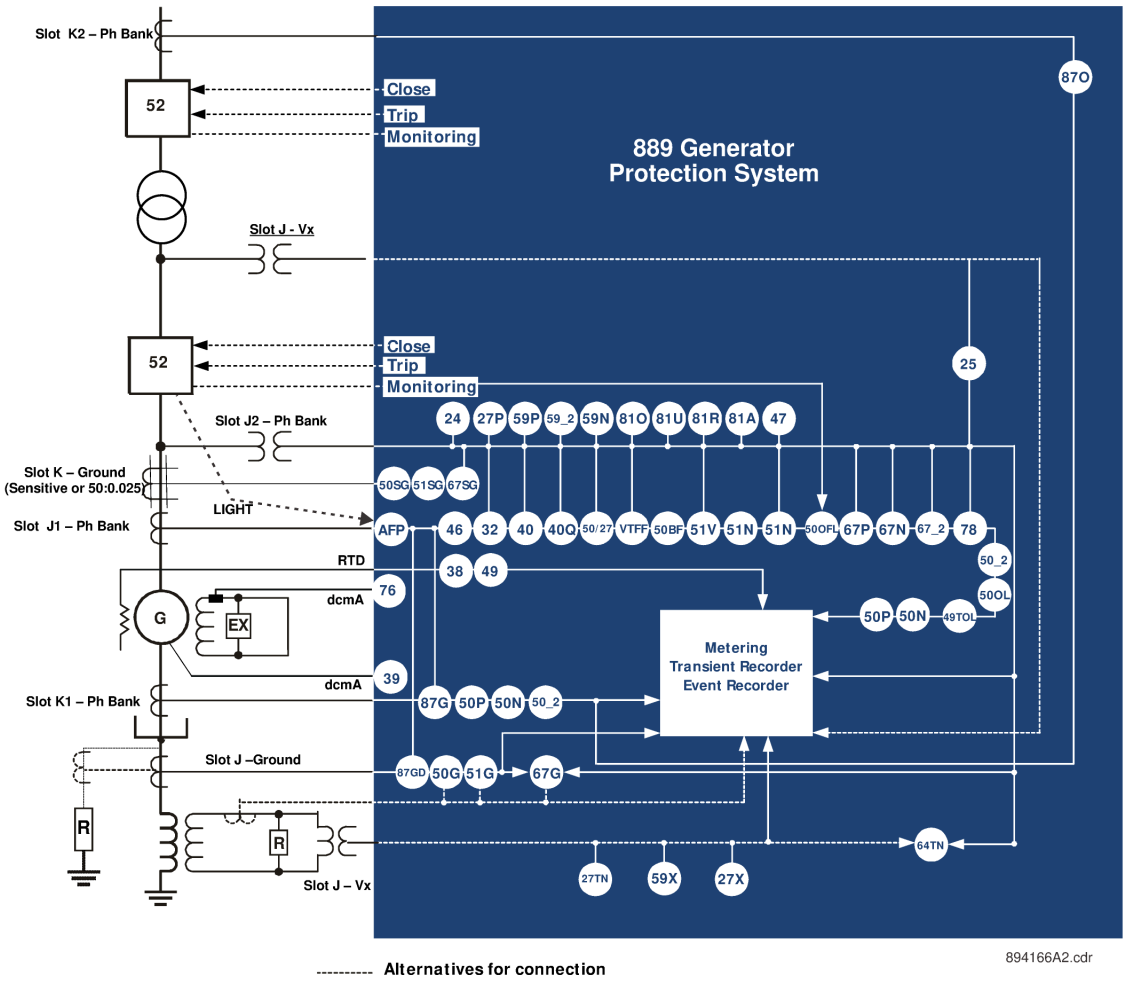

Figure 2: Single Line Diagram with order code option R1/R5)

ANSI Device Numbers and Functions

ANSI Device	Description	ANSI Device	Description
24	Volts per Hertz	51SG	Sensitive Ground Time Overcurrent
25	Synchrocheck	51V	Voltage Restrained Time Overcurrent
27P	Phase Undervoltage	55	Power Factor
27X	Auxiliary Undervoltage	59N	Neutral Overvoltage
27TN	Third Harmonic Neutral Undervoltage	59P	Phase Overvoltage
32	Directional Power	59X	Auxiliary Overvoltage
38	Bearing Overtemperature (RTD)	59_2	Negative Sequence Overvoltage
39	Bearing Vibration (dcmA)	64TN	100% Stator Ground using 3rd Harmonic Voltage Differential
40	Loss of Excitation	67G	Ground Directional Element
40Q	Reactive Power	67N	Neutral Directional Element
46	Generator Unbalance	67P	Phase Directional Element
47	Phase Reversal	67SG	Sensitive Ground Directional Element
49	Thermal (RTD)	67_2	Negative Sequence Directional Element
49TOL	Thermal Overload	76	Excitation Current Protection (dcmA)

ANSI Device	Description	ANSI Device	Description
50/27	Inadvertent Energization	78	Out-of-step Protection
50BF	Breaker Failure	81A	Frequency out-of-band
50G	Ground Instantaneous Overcurrent	81O	Overfrequency
50SG	Sensitive Ground Instantaneous Overcurrent	81U	Underfrequency
50N	Neutral Instantaneous Overcurrent	81R	Frequency Rate of Change
50P	Phase Instantaneous Overcurrent	87G	Generator Stator Differential
50_2	Negative Sequence Instantaneous Overcurrent	87O	Overall Unit (Gen-Xfrm) Protection
50OFL	Offline Overcurrent	87GD	Restricted Ground Fault (RGF)
50OL	Overload	AFP	Arc Flash Protection
51G	Ground Time Overcurrent	VTFF	VT Fuse Failure
51N	Neutral Time Overcurrent		

Other Device Functions

Description
Analog Input
Analog Output
Breaker Arcing Current (*I2t*)
Breaker Control
Breaker Health
Data Logger
Demand
Digital Counters
Event Recorder
Fault Report
FlexElements
FlexLogic Equations
Flex States
Generator Health Report
IEC 61850 Communications
Metering: current, voltage, power, PF, energy, frequency, harmonics, THD
Modbus User Map
Non-volatile Latches
OPC-UA Communications
Output Relays
RTD Temperature
Setpoint Groups (6)
Trip Bus (6)
Transient Recorder (Oscillography)
Trip and Close Coil Monitoring
User-programmable LEDs
User-programmable Pushbuttons

Description
Virtual Inputs (32)
Virtual Outputs (32)

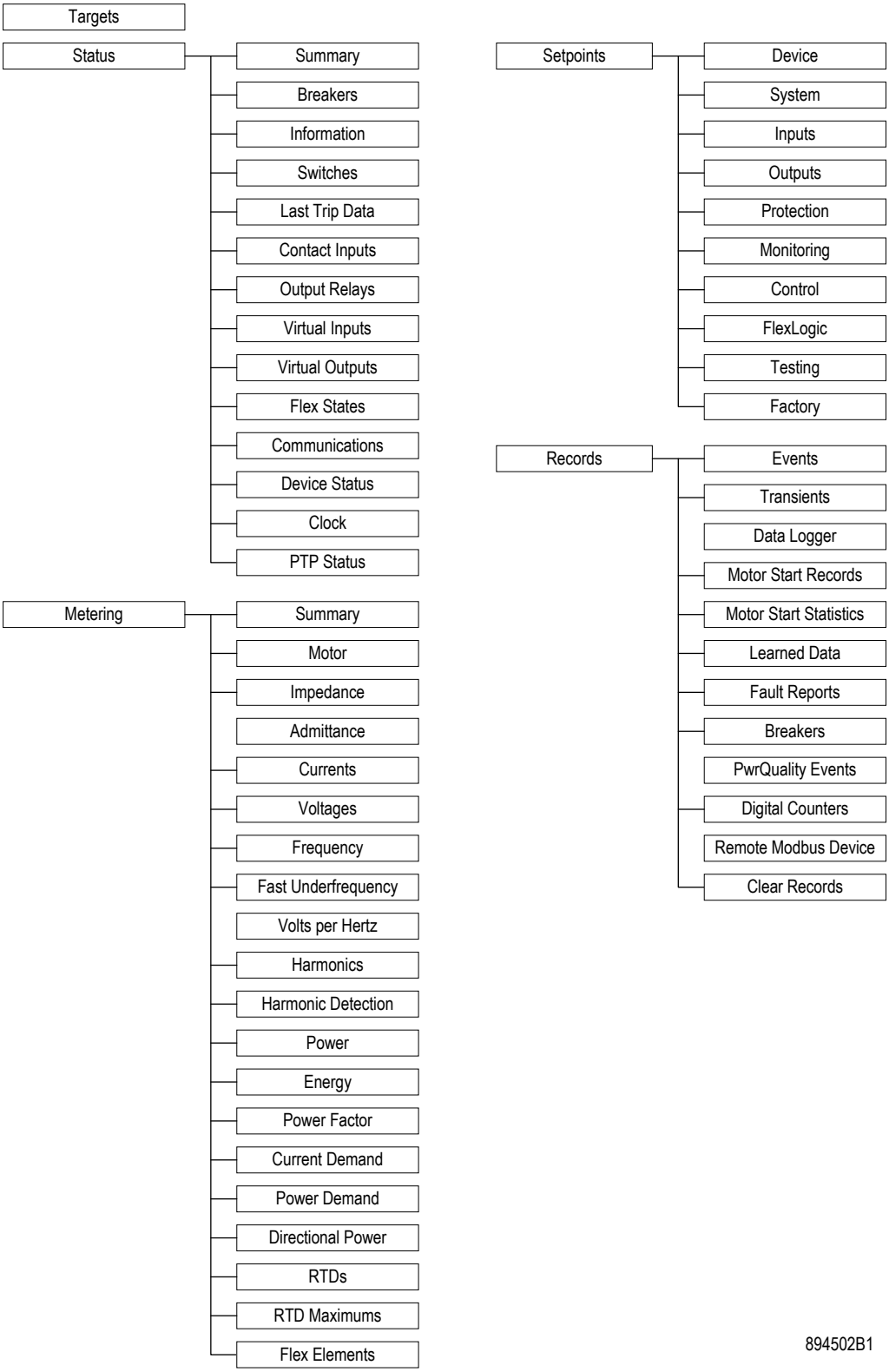

Figure 3: Main Menu Hierarchy

1.6 SECURITY OVERVIEW

The following security features are available:

BASIC SECURITY

The basic security feature is present in the default offering of the relay. The relay introduces the notion of roles for different levels of authority. Roles are used as login names with associated passwords stored on the device. The following roles are available at present: Administrator, Operator, Factory and Observer, with a fixed permission structure for each one. Note that the Factory role is not available for users, but strictly used in the manufacturing process.

The relay can still use the ***SETPOINT ACCESS*** switch feature, but enabling the feature can be done only by an Administrator. Setpoint access is controlled by a keyed switch to offer some minimal notion of security.

CYBERSENTRY

The CyberSentry Embedded Security feature is a software option that provides advanced security services. When the software option is purchased, the Basic Security is automatically disabled.

CyberSentry provides security through the following features:

- An Authentication, Authorization, Accounting (AAA) Remote Authentication Dial-In User Service (RADIUS) client that is centrally managed, enables user attribution, and uses secure standards based strong cryptography for authentication and credential protection.
- A Role-Based Access Control (RBAC) system that provides a permission model that allows access to device operations and configurations based on specific roles and individual user accounts configured on the AAA server. At present the defined roles are: Administrator, Operator and Observer.
- Strong encryption of all access and configuration network messages between the EnerVista D&I Setup software and devices using the Secure Shell (SSH) protocol, the Advanced Encryption Standard (AES), and 128-bit keys in Galois Counter Mode (GCM) as specified in the U.S. National Security Agency Suite B extension for SSH and approved by the National Institute of Standards and Technology (NIST) FIPS-140-2 standards for cryptographic systems.
- Security event reporting through the Syslog protocol for supporting Security Information Event Management (SIEM) systems for centralized cyber security monitoring.

There are two types of authentication supported by CyberSentry that can be used to access the device:

- Device Authentication – in which case the authentication is performed on the device itself, using the predefined roles as users (No RADIUS involvement).
    - Device Authentication using local roles may be done either from the front panel or through EnerVista D&I Setup software.
- Server Authentication - in which case the authentication is done on a RADIUS server, using individual user accounts defined on the server. When the user accounts are created, they are assigned to one of the predefined roles recognized by the relay.
    - Device authentication using RADIUS server may be done only through EnerVista D&I Setup software.

Note:
WiFi and USB do not currently support CyberSentry security. For this reason WiFi is disabled by default if the CyberSentry option is purchased. WiFi can be enabled, but be aware that doing so violates the security and compliance model that CyberSentry is supposed to provide.
The Viewpoint Monitor does not currently support CyberSentry security.
With the CyberSentry security option, many communication settings cannot be changed remotely. All communication settings can still be changed through the relay front panel.

When both device and server authentication are enabled, the relay automatically directs authentication requests to the device or the respective RADIUS server, based on user names. If the user ID credential does not match one of the device local accounts, the relay automatically forwards the request to a RADIUS server when one is provided. If

a RADIUS server is provided, but is unreachable over the network, server authentication requests are denied. In this situation, use local device accounts to gain access to the system.

USER ROLES

User Access Levels are used to grant varying permissions to specific user roles. User roles are used by both Basic Security and CyberSentry.

The following user roles are supported:

- **Administrator**: The Administrator role has complete read and write access to all settings and commands. The role does not allow concurrent access. The Administrator role also has an operand to indicate when it is logged on.
- **Operator**: The Operator role is present to facilitate operational actions that may be programmed and assigned to buttons on the front panel. The Operator has read/write access to all settings under the command menu/section. The Operator can also use the Virtual Input command under the control menu/section. The Operator can view settings from EnerVista D&I Setup software or the front panel but does not have the ability to change any settings. This role is not a concurrent role.
- **Observer**: The Observer role has read-only access to all device settings. This role allows concurrent access. The Observer is the default role if no authentication has been done to the device. This role can download settings files and records from the device.
- **Factory**: This is an internal non-user accessible role used for manufacturing diagnostics. The ability to enable or disable this role is a security setting that the Administrator controls.

GENERAL RULES FOR USER ROLES WITH CYBERSENTRY

1. The only concurrent role is Observer. If the user is logged in through serial, front panel, or over the network, that counts as the role being logged in for concurrency reasons.
2. Both EnerVista D&I Setup software and the front panel provide a one-step logoff. For the front panel, the root menu has a logoff command. From EnerVista D&I Setup software right-clicking on a device and providing a logoff function from the context menu is sufficient.

The EnerVista D&I Setup software Login Screen has **User Name:** and **Password:** fields for the default remote (Radius) authentication, but when a Local Authentication checkbox is selected the **User Name:** field changes to a drop down menu where the user can select one of the predefined roles.

1.7 ORDER CODES

Support of some of the features are order code dependent. Each relay is ordered with a number of required and optional modules. Each of these modules can be supplied in a number of configurations specified at the time of ordering. The information to specify a relay model is provided in the following Order Code table:

ORDER CODE FOR 889 GENERATOR PROTECTION SYSTEM																						
Pos.	1	2	3	4	5	6	7	8	9	10	11	12	13	14	15	16	17	18	19	20	21	
889	-E	P5	P5	G5	H	N	N	A	L	A	G	A	P	F	A	2	E	S	N	A	N	Example 889
																						APPLICATION:
	E																					Standard
																						PHASE CURRENTS - SLOT J:
		P1																				1A three-phase current inputs (J1), voltage inputs (J2)
		P5																				5A three-phase current inputs (J1), voltage inputs (J2)
																						PHASE CURRENTS - SLOT K:
			P1																			1A three-phase current inputs (K1), voltage inputs (K2)
			P5																			5A three-phase current inputs (K1), voltage inputs (K2)
			R1																			1A three-phase current inputs (K1), 1A three-phase current inputs (K2)
			R5																			5A three-phase current inputs (K1), 5A three-phase current inputs (K2)
																						GROUND CURRENTS:
				G1																		1A ground input (1 per phase current bank)
				G5																		5A ground input (1 per phase current bank)
				S1																		1A ground input (J1), 1A sensitive ground input (K1)
				S5																		5A ground input (J1), 5A sensitive ground input (K1)
				B1																		1A ground input (J1), 50:0.025 ground input (K1)
				B5																		5A ground input (J1), 50:0.025 ground input (K1)
																						POWER SUPPLY:
					H																	110 to 250 V DC/110 to 230 V AC
					R																	110 to 250 V DC/110 to 230 V AC - Extended Ride-through
					L																	24 to 48 VDC
																						SLOT B:
						N																None
						R																6 X RTDs (Pt100, Ni100, Ni120)
						S																6 X RTDs (Pt100, Ni100, Ni120, Cu10)
						C																15 Digital Inputs (24 V DC, Ext Supply)
																						SLOT C:
							N															None
							R															6 X RTDs (Pt100, Ni100, Ni120)
							S															6 X RTDs (Pt100, Ni100, Ni120, Cu10)
							C															15 Digital Inputs (24 V DC, Ext Supply)
																						SLOT F:
								A														2 Form A (Vmon) Relays, 2 Form C Relays, 1 Critical Failure Relay, 7 Digital Inputs (Int/Ext Supply)

ORDER CODE FOR 889 GENERATOR PROTECTION SYSTEM																						
Pos.	1	2	3	4	5	6	7	8	9	10	11	12	13	14	15	16	17	18	19	20	21	
								M														4 SSR (High-Speed, High-Break), 1 Critical Failure Relay, 7 Digital Inputs (Int/Ext Supply)
								X														4 Arc Flash Inputs
								Y														8 Arc Flash Inputs
																						SLOT G:
									N													None
									A													2 Form A Relays, 3 Form C Relays, 7 Digital Inputs (Int/Ext Supply)
									B													9 Form A Relays, 10 Digital Inputs
									D													8 Double Pole Outputs
									K													5 Form A Relays, 1 Form C Relay, 10 Digital Inputs
									L													7 DcmA O/P, 4 DcmA I/P, 1 RTD
									M													4 SSR (High-Speed, High-Break), 1 Form C Relay, 7 Digital Inputs (Int/Ext Supply)
									X													4 Arc Flash Inputs
									Y													8 Arc Flash Inputs
																						SLOT H:
										N												None
										A												2 Form A Relays, 3 Form C Relays, 7 Digital Inputs (Int/Ext Supply)
										B												9 Form A Relays, 10 Digital Inputs
										D												8 Double Pole Outputs
										F												10 Digital Inputs, 4 Arc Flash Inputs
										K												5 Form A Relays, 1 Form C Relay, 10 Digital Inputs
										M												4 SSR (High-Speed, High-Break), 1 Form C Relay, 7 Digital Inputs (Int/Ext Supply)
										X												4 Arc Flash Inputs
										Y												8 Arc Flash Inputs
																						FACEPLATE:
											M											Basic: Membrane Keypad with 3 Pushbuttons
											G											Standard : Rugged Keypad with 3 Pushbuttons
																						CURRENT PROTECTION:
												M										Standard: 38 (RTD) (1), 39 (AnIp) (1), 46 (Gen. Unbl.) (1), 50/27 (1), 50OFL (1), 50OL (1), 50P (2/CT bank), 50N (1/CT bank), 50G (2), 50SG (1), 50_2 (1/CT bank), 51V (2), 51N (2), 51G (2), 51SG (1), 67N (1), 67G (1), 67SG (1), 76 (AnIp) (1), 87G (1)
												A										Advanced: Standard, 67P (1), 67_2 (1), 87GD (RGF) (1), 87O
																						VOLTAGE MONITORING AND PROTECTION:
													S									Standard: 24 (2), 25 (1), 27TN (1), 27P (2), 27X (2), 32 (2), 40Q (1), 40 (1), 47 (1), 59X (2), 81O (2), 81U (4)
													P									Advanced: Standard, 55, 59P (2), 59N (1), 59_2 (1), 64TN (100% stator ground) (1), 78 (1), 81R (2),
																						CONTROL

ORDER CODE FOR 889 GENERATOR PROTECTION SYSTEM																						
Pos.	1	2	3	4	5	6	7	8	9	10	11	12	13	14	15	16	17	18	19	20	21	
														F								Standard: Setpoint Group Control, Virtual Inputs Control, Trip Bus, FlexLogic, VTFF (1), 50BF (1), Sequential Shutdown, Field Breaker Discrepancy, Breaker Control
														T								Advanced HMI: Standard, Tab Pushbuttons, Annunciator Panel, Configurable SLDs with Bay Control
																						MONITORING
															B							Basic: Breaker Coil and Arcing Monitoring, Demand, Digital Counters, Running Hours
															C							Standard: Basic, Breaker Health Report, 49TOL (Thermal Overload) (1)
															A							Advanced: Standard, 81A, Harmonic Detection
															E							Extended: Advanced, ESA Functions
																						COMMUNICATIONS:
																S	E					Standard: Front USB, 1x Rear RS485 (Modbus RTU, DNP 3.0, IEC 60870-5-103), 1x Ethernet RJ45 ports (Modbus TCP, DNP)
																1	E					Advanced: Front USB, 1x Rear RS485, 2x Ethernet Ports, Modbus RTU/TCP, DNP 3.0, IEC 60870-5-103/104, 1588, SNTP, OPC-UA
																1	P					Advanced, PRP
																2	A					Advanced + IEC 61850
																2	E					Advanced + PRP + IEC 61850
																3	A					Advanced, Extended IEC 61850
																3	E					Advanced, PRP, Extended IEC 61850
																						ADVANCED COMMUNICATIONS CONNECTOR
																		N				None
																		S				ST, Multi-mode 1310nm
																		C				RJ45, Copper 10/100M
																						WIRELESS COMMUNICATION:
																			N			None
																			W			WiFi 802.11
																						SECURITY
																				B		Basic
																				A		Advanced: CyberSentry Level 1
																						FUTURE OPTION
																					N	Not Available

- Harsh Environment Coating is a standard feature on all relays.
- Advanced security is only available with advanced communications (1E, 1P, 3A, 3E). When you select the advanced communications option, the Ethernet port on the main CPU is disabled.
- Retrofit order codes must be configured using the GE Multilin Online Store (OLS) based on the existing relay order code and additional requirements. Refer to the GE website and search for the **Buy Retrofit Kit** for further information.

Remote Module I/O (RMIO)

The Remote RTD module provides additional protection.

RMIO[1] –	*	G	G	*	*	
Power Supply	**L**	|	|	|	|	24 - 48 V DC
	H	|	|	|	|	110 - 250 V DC / 110 - 230 V AC
I/O Module 1		**G**	|	|	|	Remote Module I/O (3 - 100 Ohm Platinum RTDs)
I/O Module 2			**G**	|	|	Remote Module I/O (3 - 100 Ohm Platinum RTDs)
I/O Module 3[2]				**G**	|	Remote Module I/O (3 - 100 Ohm Platinum RTDs)
				X	|	None
I/O Module 4					**G**	Remote Module I/O (3 - 100 Ohm Platinum RTDs)
					X	None

1. RMIO requires firmware version 2.00 and later and hardware version B. Check the hardware version under **Status > Information > Main CPU**. If RMIO support is required for relays with earlier hardware versions, contact the factory.
2. RMIO comes standard with 6 RTDs (Modules 1 and 2).

892800RMIO-A1.fm

Other Accessories

- 18J0-0030 8 Series Depth Reducing Collar - 1 3/8”
- 18J0-0029 8 Series Depth Reducing Collar - 3”
- 8 Series Retrofit Kit, 489 to 889

1.8 CAUTIONS, WARNINGS AND NOTES

Before attempting to install or use the device, review all safety indicators in this document to help prevent injury, equipment damage, or downtime.

1.8.1 SAFETY WORDS AND DEFINITIONS

The following symbols and formatting are used in this document indicate certain types of information:

Caution:
Refer to equipment documentation. Failure to do so could result in damage to the equipment

Warning:
Risk of electric shock

Warning:
Risk of damage to eyesight

Note:
Indicates practices not related to personal injury.

1.8.2 GENERAL CAUTIONS AND WARNINGS

The following general safety precautions and warnings apply.

Caution:
Before attempting to use the equipment, it is important that all danger and caution indicators are reviewed.
If the equipment is used in a manner not specified by the manufacturer or functions abnormally, proceed with caution. Otherwise, the protection provided by the equipment may be impaired and can result in impaired operation and injury.

Warning:
Hazardous voltages can cause shock, burns or death.

Caution:
Installation/service personnel must be familiar with general device test practices, electrical awareness and safety precautions must be followed.
Before performing visual inspections, tests, or periodic maintenance on this device or associated circuits, isolate or disconnect all hazardous live circuits and sources of electric power.

Warning:
Failure to shut equipment off prior to removing the power connections could expose you to dangerous voltages causing injury or death.
Ensure that all connections to the product are correct so as to avoid accidental risk of shock and/or fire, for example from high voltage connected to low voltage terminals.

Caution:
Follow the requirements of this manual, including adequate wiring size and type, terminal torque settings, voltage, current magnitudes applied, and adequate isolation/clearance in external wiring from high to low voltage circuits.
Use the device only for its intended purpose and application.
Ensure that all ground paths are un-compromised for safety purposes during device operation and service.
All recommended equipment that should be grounded and must have a reliable and un-compromised grounding path for safety purposes, protection against electromagnetic interference and proper device operation.
Equipment grounds should be bonded together and connected to the facility's main ground system for primary power.
Keep all ground leads as short as possible.
In addition to the safety precautions mentioned all electrical connections made must respect the applicable local jurisdiction electrical code.
It is recommended that a field external switch, circuit breaker be connected near the equipment as a means of power disconnect. The external switch or circuit breaker is selected in accordance with the power rating.
This product itself is not Personal Protective Equipment (PPE). However, it can be used in the computation of site specific Arc Flash analysis when the arc flash option is ordered. If a new appropriate Hazard Reduction Category code for the installation is determined, user should follow the cautions mentioned in the arc flash installation section.
The critical failure relay must be connected to annunciate the status of the device for all applications and in particular when the arc flash option is ordered.
Ensure that the control power applied to the device, the AC current, and voltage input match the ratings specified on the relay nameplate. Do not apply current or voltage in excess of the specified limits.
Only qualified personnel are to operate the device. Such personnel must be thoroughly familiar with all safety cautions and warnings in this manual and with applicable country, regional, utility, and plant safety regulations.

Warning:
Hazardous voltages can exist in the power supply and at the device connection to current transformers, voltage transformers, control, and test circuit terminals. Make sure all sources of such voltages are isolated prior to attempting work on the device.
Hazardous voltages can exist when opening the secondary circuits of live current transformers. Make sure that current transformer secondary circuits are shorted out before making or removing any connection to the current transformer (CT) input terminals of the device.

Caution:
For tests with secondary test equipment, ensure that no other sources of voltages or currents are connected to such equipment and that trip and close commands to the circuit breakers or other switching apparatus are isolated, unless this is required by the test procedure and is specified by appropriate utility/plant procedure.
When the device is used to control primary equipment, such as circuit breakers, isolators, and other switching apparatus, all control circuits from the device to the primary equipment must be isolated while personnel are working on or around this primary equipment to prevent any inadvertent command from this device.
Use an external disconnect to isolate the mains voltage supply.

Warning:
LED transmitters are classified as IEC 60825-1 Accessible Emission Limit (AEL) Class 1M. Class 1M devices are considered safe to the unaided eye. Do not view directly with optical instruments.

Note:
To ensure the settings file inside the relay is updated, wait 30 seconds after a setpoint change before cycling power. This product is rated to Class A emissions levels and is to be used in Utility, Substation Industrial environments. Not to be used near electronic devices rated for Class B levels.

1.9 MUST-READ INFORMATION

The following general statements apply and are repeated in the relevant sections of the manual.

- Before upgrading firmware, it is very important to save the current settings to a file on your PC. After the firmware has been upgraded, it is necessary to load this file back into the device.
- The ***SNTP*** and ***IRIG-B*** settings take effect after rebooting the relay.
- Commands may be issued freely through other protocols than Modbus (i.e., DNP, IEC 104, and, IEC 61850) without user authentication or encryption of data taking place, even if the relay has the advanced security feature enabled.
- Note that the factory role password may not be changed.
- Both DNP and IEC104 protocols can work at the same time, but consider that there is only one point map. So, both protocols use the same configured points.
- The 52b contact is closed when the breaker is open and open when the breaker is closed.
- The Phase Directional element responds to the forward load current. In the case of a following reverse fault, the element needs some time – in the order of 8 ms – to change the directional signal. Some protection elements such as Instantaneous Overcurrent may respond to reverse faults before the directional signal has changed. A coordination time of at least 10 ms must therefore be added to all the instantaneous protection elements under the supervision of the Phase Directional element. If current reversal is a concern, a longer delay – in the order of 20 ms – is needed.
- The same curves used for the time overcurrent elements are used for Neutral Displacement. When using the curve to determine the operating time of the Neutral Displacement element, substitute the ratio of neutral voltage to Pickup level for the current ratio shown on the horizontal axis of the curve plot.
- The relay is not approved as, or intended to be, a revenue metering instrument. If used in a peak load control system, consider the accuracy rating and method of measurement employed, and the source VTs and CTs, in comparison with the electrical utility revenue metering system.
- In bulk oil circuit breakers, the interrupting time for currents is less than 25% of the interrupting rating and can be significantly longer than the normal interrupting time.
- For future reference, make a printout of the conversion report immediately after the conversion in case conversion reports are removed or settings modified from the 8 Series Setup Software.
- If the 3-phase VT uses a delta connection and ***FREQUENCY INPUT*** is set to `J2-3VT`, the positive sequence voltage is used as the supervision voltage. In such conditions, the true supervision level is internally changed to $1/\sqrt{3}$ of the user setting since the base of VT here is the phase-phase voltage. (869, 889 only)
- To monitor the trip coil circuit integrity, use the relay terminals “FA_1 NO” and “FA_1 COM” to connect the Trip coil, and provide a jumper between terminals “FA_1 COM” and “FA_1 OPT/V” voltage monitor).
- WiFi and USB do not currently support CyberSentry security. For this reason WiFi is disabled by default if the CyberSentry option is purchased. WiFi can be enabled, but be aware that doing so violates the security and compliance model that CyberSentry is supposed to provide.
- In Power factor monitoring, ***SWITCH-IN*** and ***SWITCH-OUT*** are mutually exclusive settings. (845, 850)

1.9.1 STORAGE

Store the unit indoors in a cool, dry place. If possible, store in the original packaging. Follow the storage temperature range outlined in the Specifications.

If applicable, use the factory-provided dust caps on all Arc Flash sensor fiber and connectors when not in use, to avoid dust contamination in the transceiver and sensor plugs.

1.10 FOR FURTHER ASSISTANCE

For current manuals and software go to:

Website: www.gegridsolutions.com/multilin/ProductListing.htm

For product support, contact the information and call center as follows:

GE Grid Solutions

650 Markland Street

Markham, Ontario

Canada L6C 0M1

Worldwide telephone: +1 905 927 7070

Europe/Middle East/Africa telephone: +34 94 485 88 54

North America toll-free: 1 800 547 8629

Fax: +1 905 927 5098

Worldwide e-mail: multilin.tech@ge.com

Europe e-mail: multilin.tech.euro@ge.com

Website: http://www.gegridsolutions.com/multilin

1.10.1 REPAIRS

The firmware and software can be upgraded without return of the device to the factory.

For issues not solved by troubleshooting, the process to return the device to the factory for repair is as follows:

- Contact a GE Grid Solutions Technical Support Center. Contact information is found in the first chapter.
- Obtain a Return Materials Authorization (RMA) number from the Technical Support Center.
- Verify that the RMA and Commercial Invoice received have the correct information.
- Tightly pack the unit in a box with bubble wrap, foam material, or styrofoam inserts or packaging peanuts to cushion the item(s). You may also use double boxing whereby you place the box in a larger box that contains at least 5 cm of cushioning material.
- Ship the unit by courier or freight forwarder, along with the Commercial Invoice and RMA, to the factory.
- Customers are responsible for shipping costs to the factory, regardless of whether the unit is under warranty.
- Fax a copy of the shipping information to the GE Grid Solutions service department.

Use the detailed return procedure outlined at

https://www.gegridsolutions.com/multilin/support/ret_proc.htm

The current warranty and return information are outlined at

https://www.gegridsolutions.com/multilin/warranty.htm

CHAPTER 2

INSTALLATION

2.1 CHAPTER OVERVIEW

This chapter describes the mechanical and electrical installation of the relay.

This chapter contains the following sections:

Chapter Overview	24
Product Identification	25
Dimensions	26
Mounting	27
Draw-out Unit Withdrawal and Insertion	32
Removable Power Supply	34
Removable Magnetic Module	35
Remote Module I/O (RMIO)	38
IP20 Back Cover	40
Arc Flash Sensor	41
Physical considerations of wiring	44
Terminal connections	47
Terminal Identification	50
RMIO Module Installation	52
Phase Sequence and Transformer Polarity	54
Zero-Sequence CT Installation	58
Voltage Inputs	59
Control Power	60
Contact Inputs	61
Output Relays	63
Serial Communications	66
IRIG-B	67
Typical Wiring Diagrams	68

2.2 PRODUCT IDENTIFICATION

The product identification label is located on the side panel of the relay. This label indicates the product model, serial number, and date of manufacture. The following figure shows an example of such a label.

Figure 4: Product label example

2.3 DIMENSIONS

The relay dimensions are shown below. Additional dimensions for mounting, and panel cutouts, are shown in the following sections.

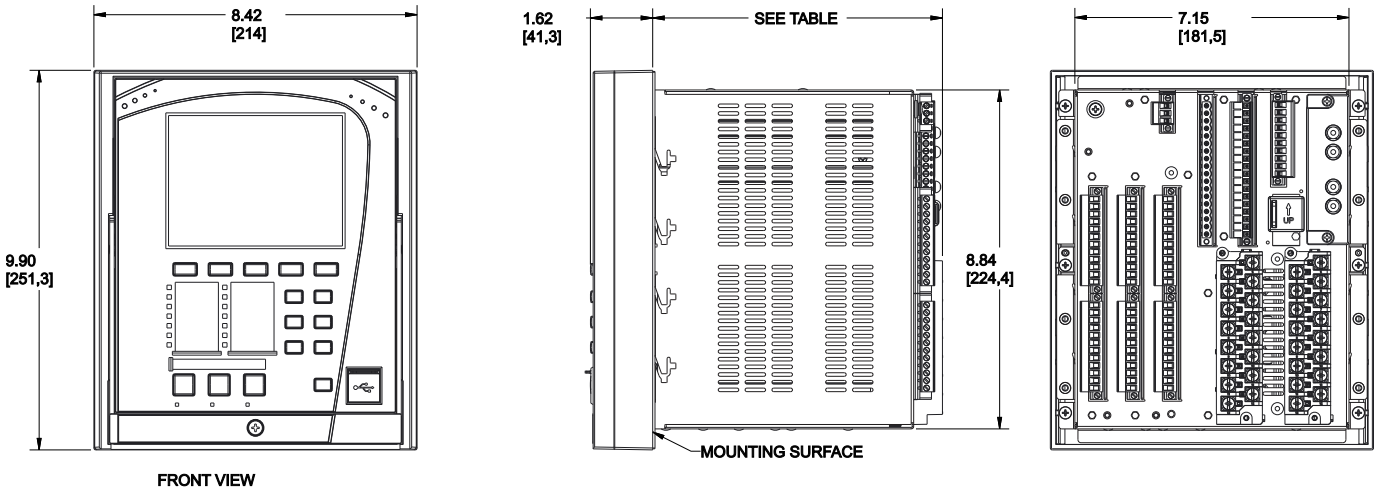

CONNECTOR PLUG TYPE	SCREW CONNECTION LOCATION	MAX DEPTH
RIGHT-ANGLE	SIDE	7.55[191.8]
STRAIGHT	FRONT	7.71[195.8]

Figure 5: Relay Dimensions

2.4 MOUNTING

The relay can be mounted two ways: standard panel mount or optional tab mounting, if required.

- **Standard panel mounting:** From the front of the panel, slide the empty case into the cutout. From the rear of the panel, screw the case into the panel at the 8 screw positions.
- **Optional tab mounting:** The V tabs are located on the sides of the case and appear as shown in the following figure. Use needle nose pliers to bend the retaining V tabs outward to about 90°. Use caution and do not bend and distort the wall of the enclosure adjacent to the tabs. The relay can now be inserted and can be panel wired.

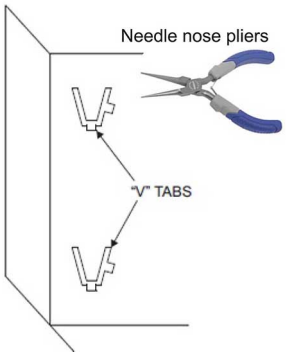

Figure 6: V Tabs Located on Case Side

2.4.1 STANDARD PANEL MOUNT

The standard panel mount and cutout dimensions are illustrated below.

Caution:
To avoid the potential for personal injury due to fire hazards, ensure the unit is mounted in a safe location and/or within an appropriate enclosure.

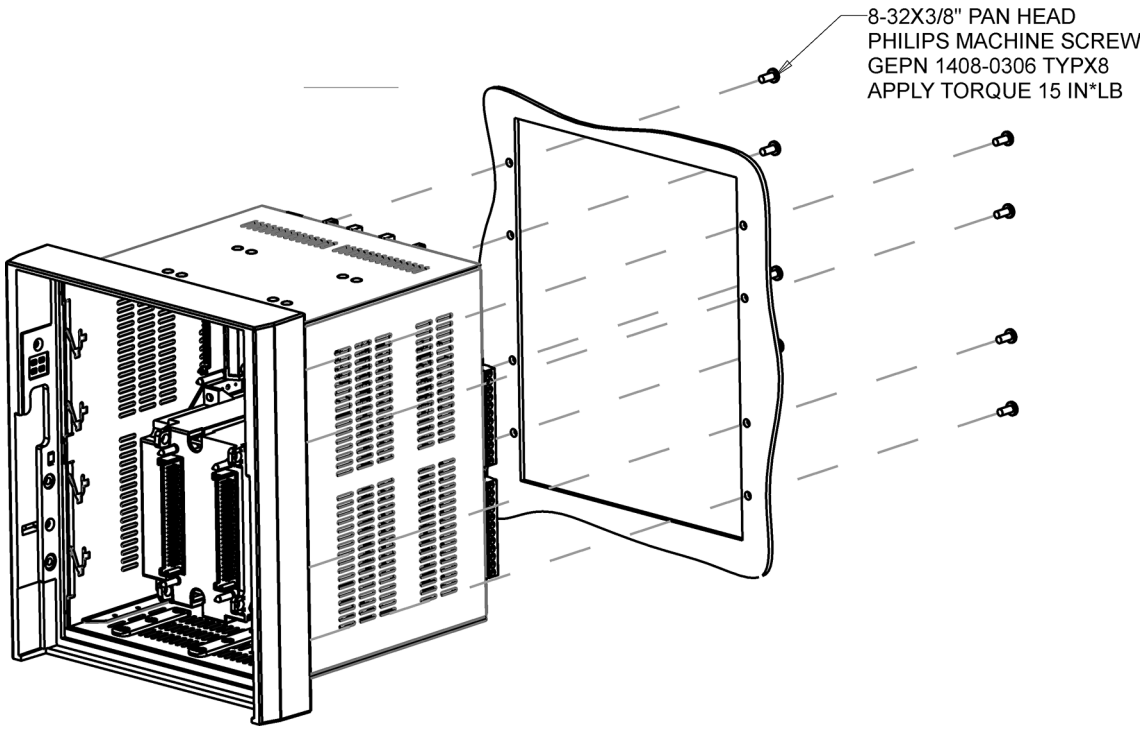

Figure 7: Standard panel mount

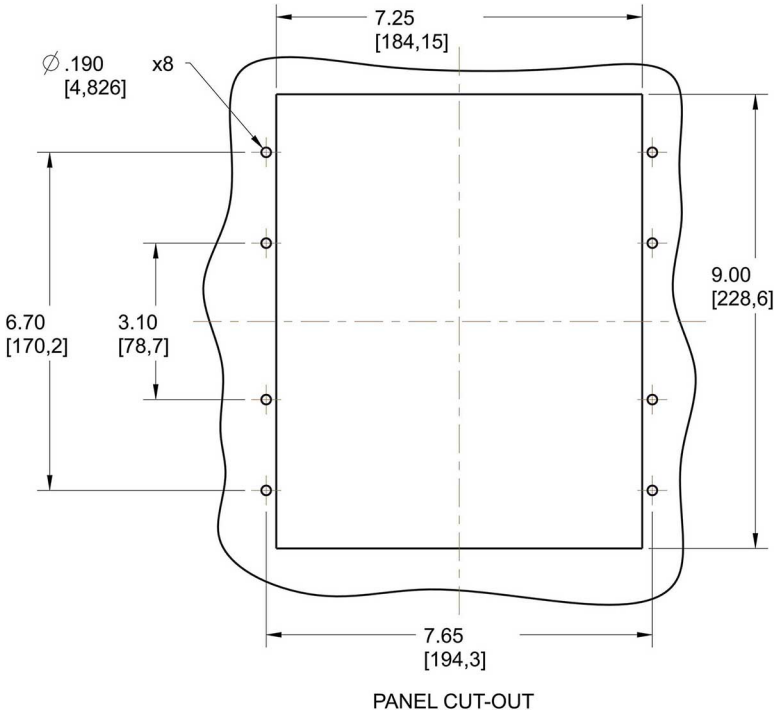

Figure 8: Panel cutout dimensions

Depth reducing collar

Three different sizes of optional depth reducing collar are available for mounting relays in narrow-depth service panels, or wherever space is an issue.

Note:
The drill hole locations are different when a depth reducing collar is used. See the Depth reducing collar panel cutout figure below.

- 18J0-0030 8 Series Depth Reducing Collar - 1 3/8”
- 18J0-0029 8 Series Depth Reducing Collar - 3”
- 18J0-0184 8 Series Depth Reducing Collar - 3 3/4”

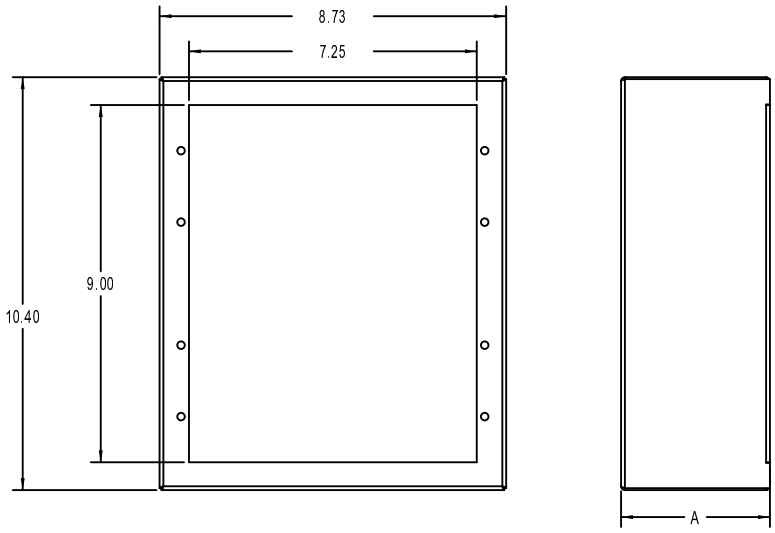

DIMENSIONS IN INCHES

GEPN	'A' DEPTH
1009-0310	1 3/8"
1009-0311	3"
1009-0350	3 3/4"

892703A2.cdr

Figure 9: Depth reducing collar dimensions

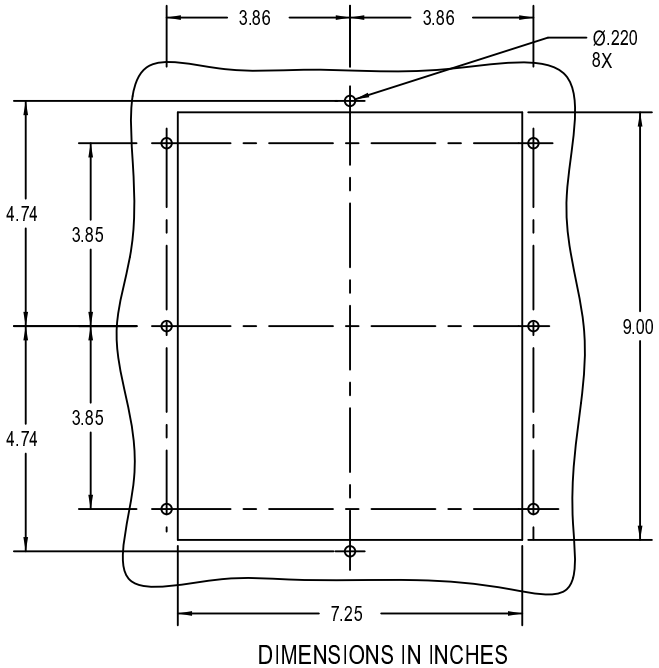

Figure 10: Depth reducing collar panel cutout

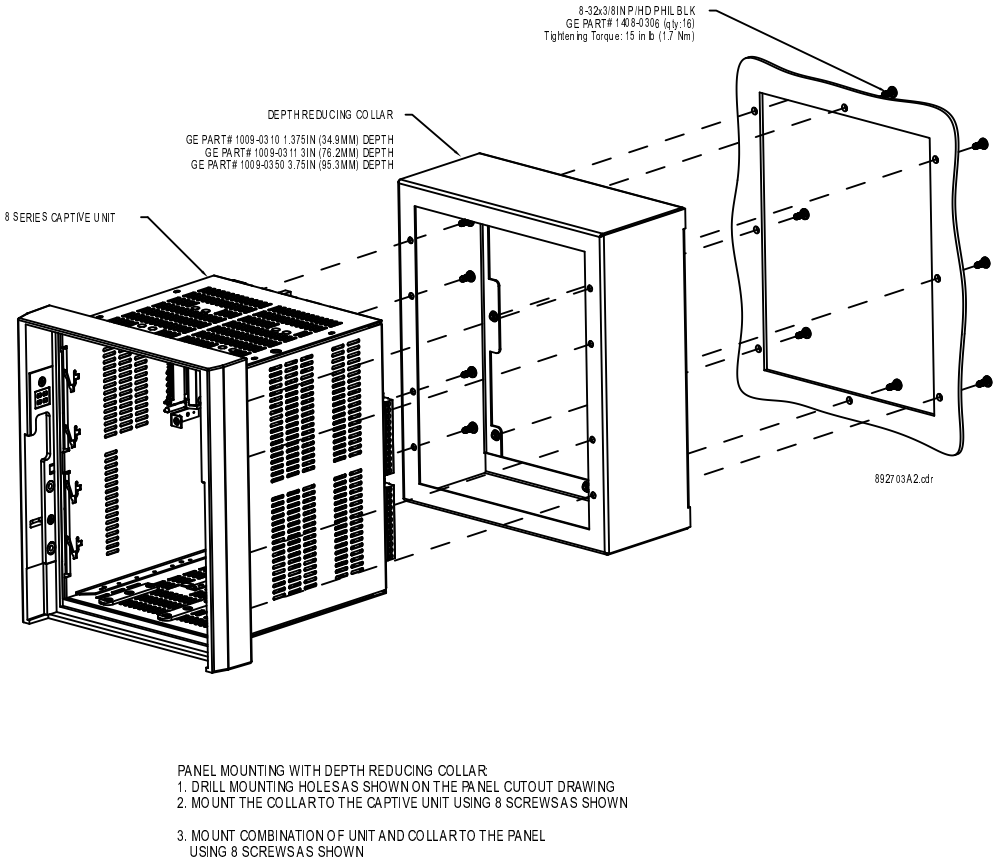

Figure 11: Depth reducing collar installation

To mount an 8 Series relay with a depth reducing collar, follow these steps:

1. Drill mounting holes as shown on the Depth reducing collar panel cutout figure above.
2. Mount the collar on the captive unit using eight screws.
3. Mount the combined unit and collar on the panel using eight screws.

2.5 DRAW-OUT UNIT WITHDRAWAL AND INSERTION

Caution:
Turn off control power before drawing out or re-inserting the relay to prevent mal-operation.

Follow the steps outlined in the diagrams below to insert and withdraw.

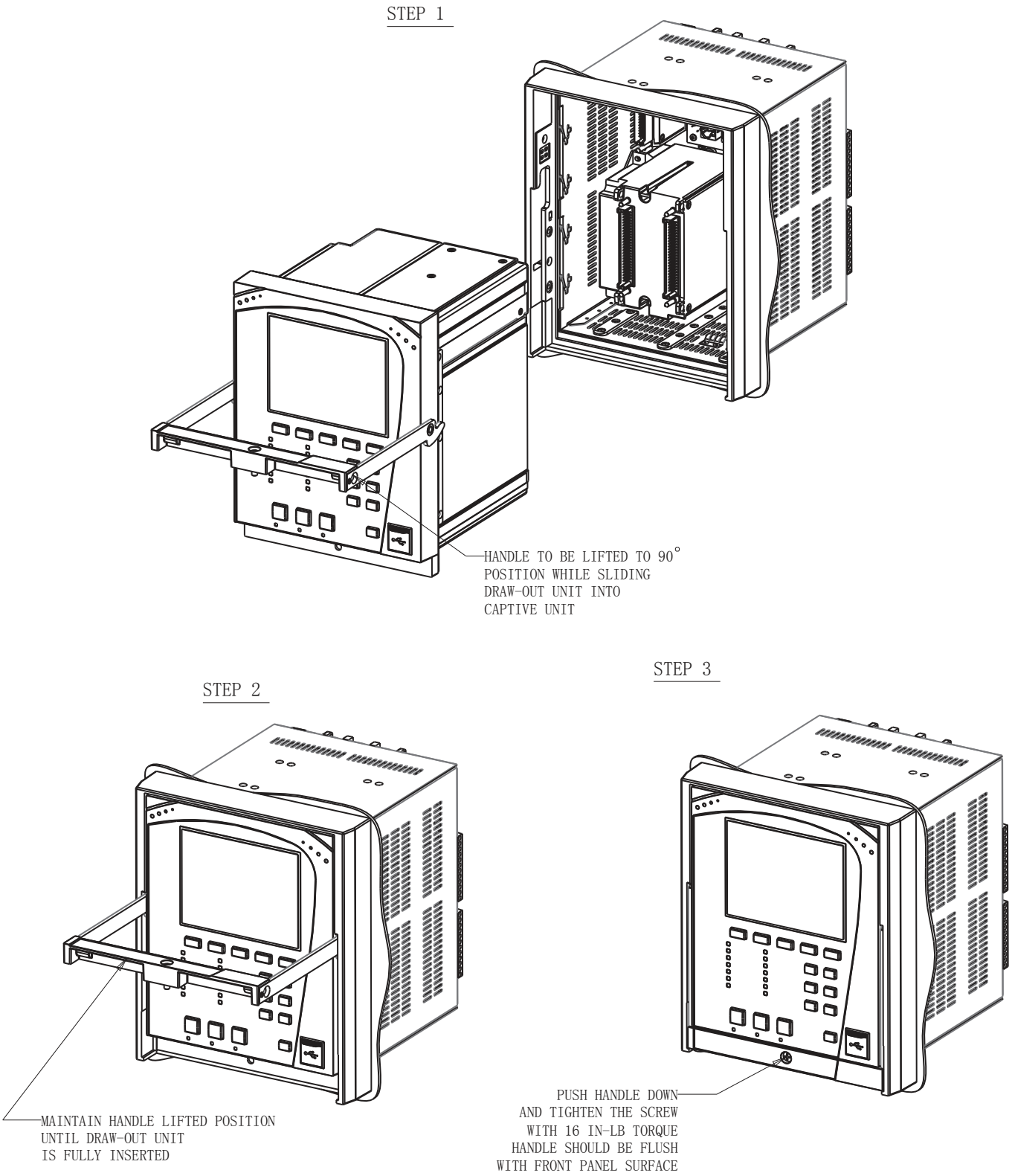

Figure 12: Unit withdrawal and insertion diagram

2.6 REMOVABLE POWER SUPPLY

Follow the steps outlined in the below diagram to insert (#1) or remove (#2) the power supply from the unit.

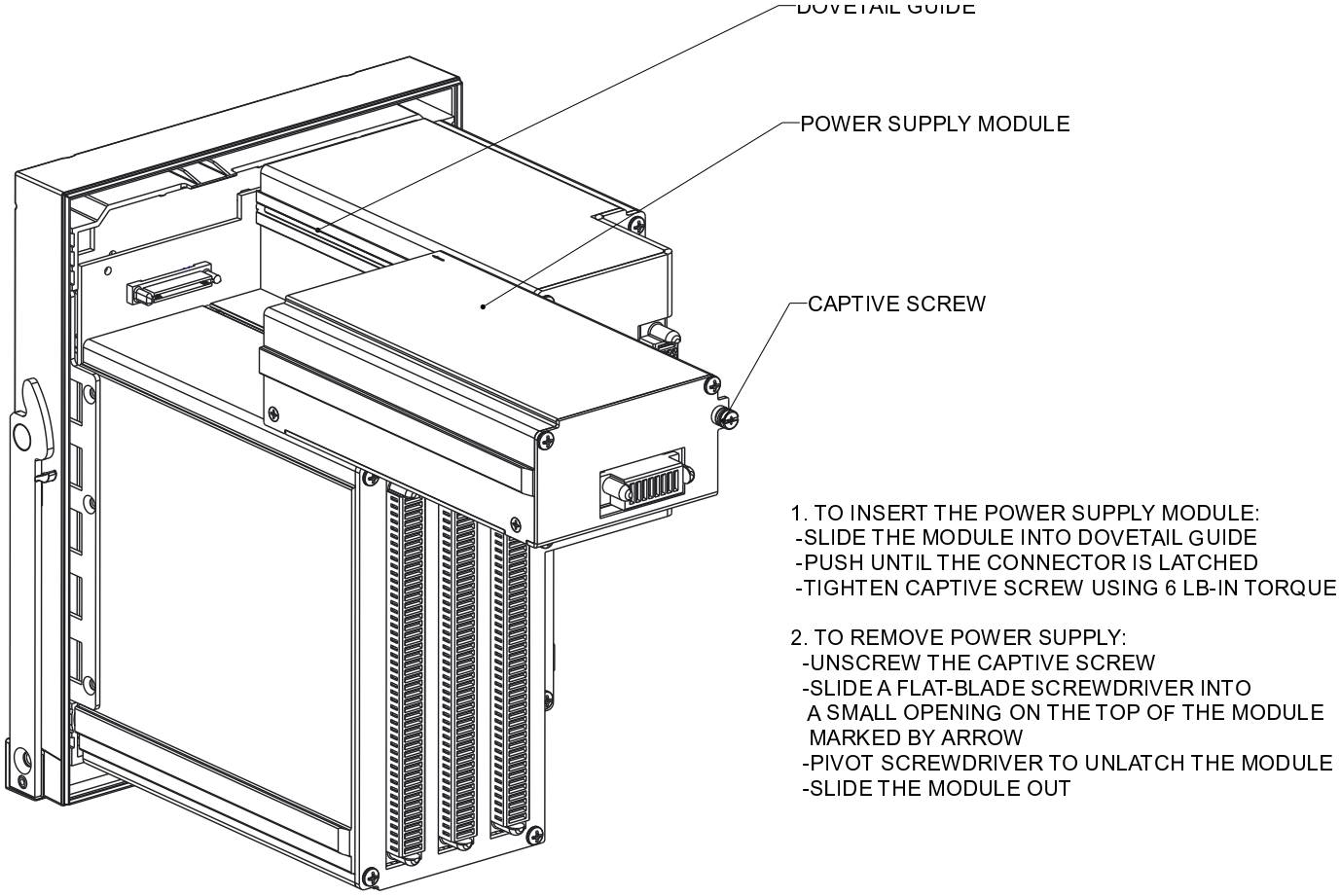

Figure 13: Insert or Remove the Power Supply

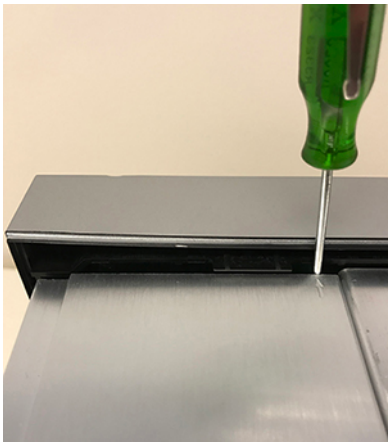

Figure 14: Unlatch Module

2.7 REMOVABLE MAGNETIC MODULE

Warning:
You must follow all preparation steps before removing the CT/VT magnetic module.

Warning:
You must identify all current and voltage sources connected to the relay before starting the removal process.

Warning:
Only suitably-qualified personnel may remove the magnetic module from an installed relay.

Warning:
Appropriate PPE is required based on the arc flash calculations.

Caution:
LOTO (Lockout Tag Out) of the system is required prior to module removal/ replacement.

Follow the procedures outlined below to remove or replace the CT/VT magnetic module.

PREPARATION

1. Shut down and de-energize all systems connected to the relay.
2. Review all cautions and warnings in the introduction.

Warning:
A relay, with the magnetic module removed, does NOT have an internal automatic CT shorting mechanism.

Warning:
Hazardous voltages may exist when opening the secondary circuits of live current transformers.

Warning:
Make sure that in-field current transformer secondary circuits are shorted out before making or removing any connection to the current transformer (CT) input terminals.

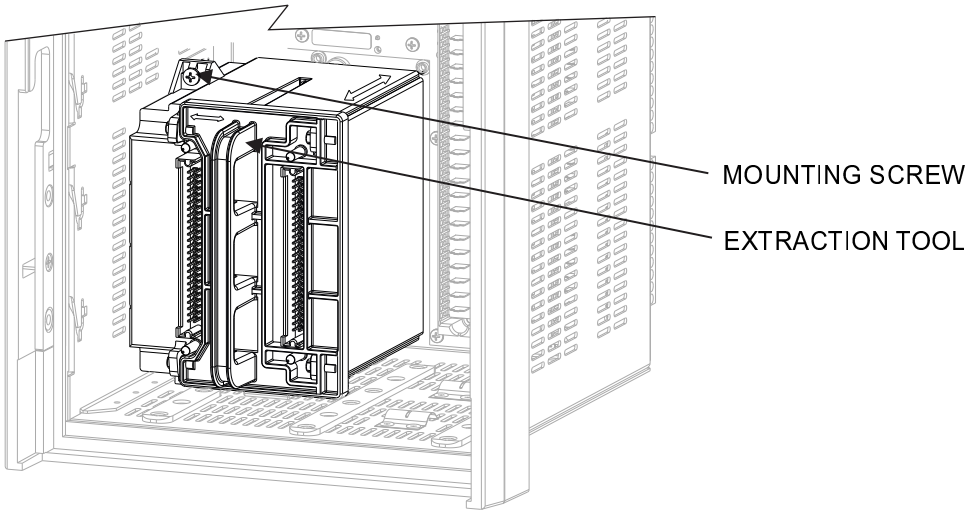

Figure 15: Removing/replacing the CT/VT Magnetic Module

REMOVAL

Caution:
LOTO (Lockout Tag Out) of the system is required prior to module removal/ replacement.

1. Remove the draw-out unit from the chassis. Carefully set aside.
2. Within the captive chassis, unscrew the mounting screw (as indicated in the following figure).
3. Insert the magnetic module extractor tool as shown in the following figure, without engaging the pins.
4. Slide the tool to the left, engaging the pins fully (see arrow in figure).
5. Pull the tool handle towards the operator to disengage the module, and carefully remove the module from the chassis.
6. Remove the tool from the module, and save for future use.

REPLACEMENT

Caution:
LOTO (Lockout Tag Out) of the system is required prior to module removal/ replacement.
Ensure the replacement CT /VT module is the same type as the removed module. Alternate models and configurations may be unsafe for use.

1. Insert the extractor tool into the front of the module, then slide the tool to the left to engage the tool pins.
2. Place the module/tool at the front of the chassis so that it is flush with the left and bottom sides.
3. Slide the module/tool into the back of the chassis as far as it will go, making sure the connectors mate while keeping the module flush to the left and bottom sides of the chassis.
4. Tighten the captive mounting screw using a torque of 6 in-lbs.
5. Remove the tool from the magnetics module and save for future use.
6. Insert the draw-out unit.
7. Re-energize the relay system.
8. Remove the external shorting equipment from the CT inputs.

9. Ensure the In Service LED on the relay front panel is green.
10. Navigate to the Target message screen (press **Home** and then **Targets**) and check that the Target screen does not show any Self-Test errors. Self-Test errors may indicate that the module has not been mounted properly.
11. Verify that CTs and VTs, digital inputs and other circuits are all metering correctly.

2.8 REMOTE MODULE I/O (RMIO)

If using the Remote RTD module, follow these installation steps.

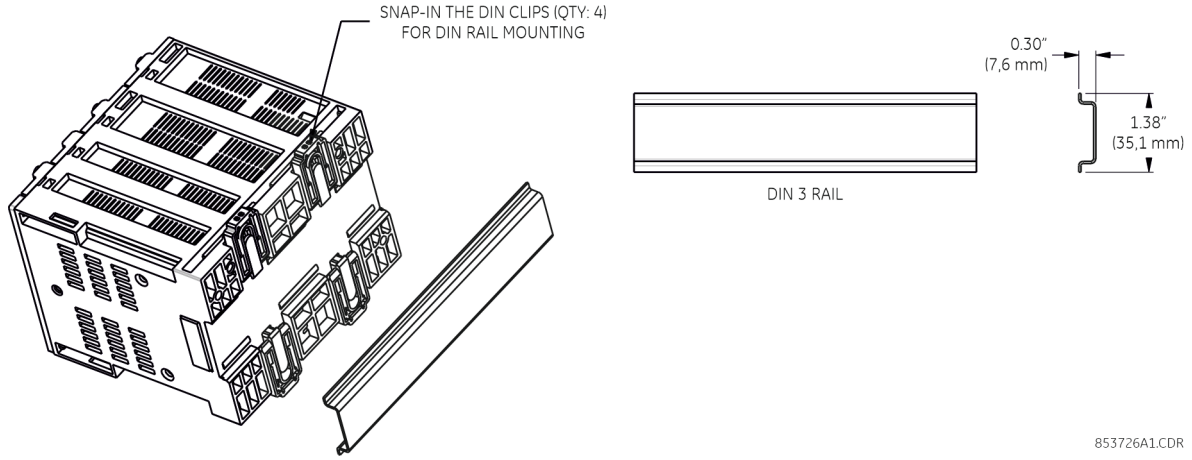

Figure 16: RMIO - DIN rail mounting - Base & Expansion units

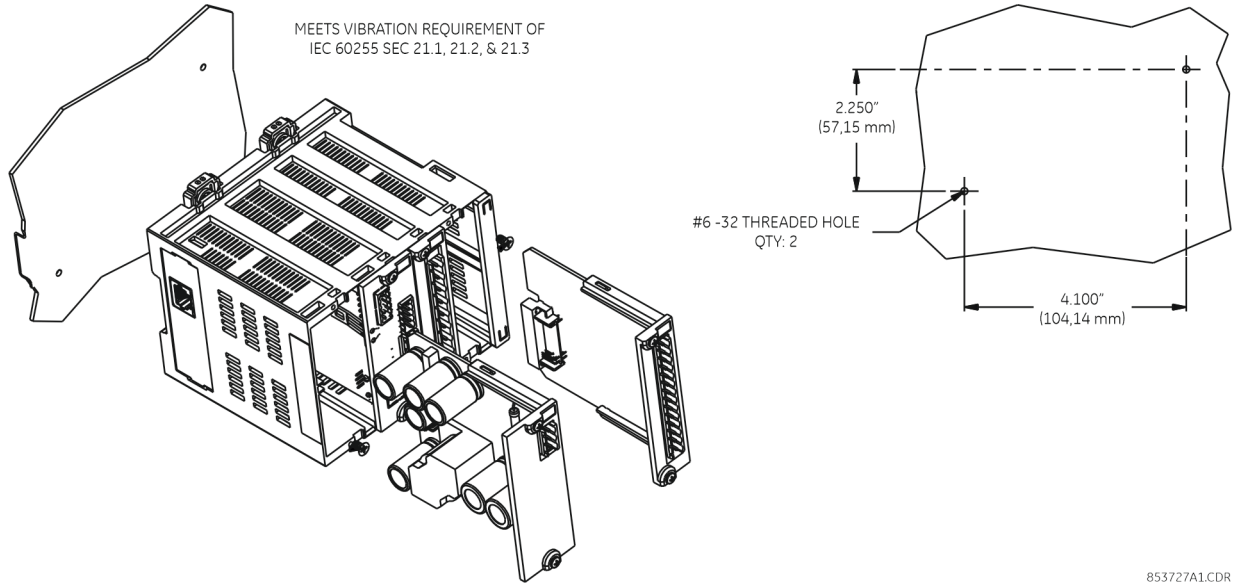

Figure 17: RMIO - Base Unit screw mounting

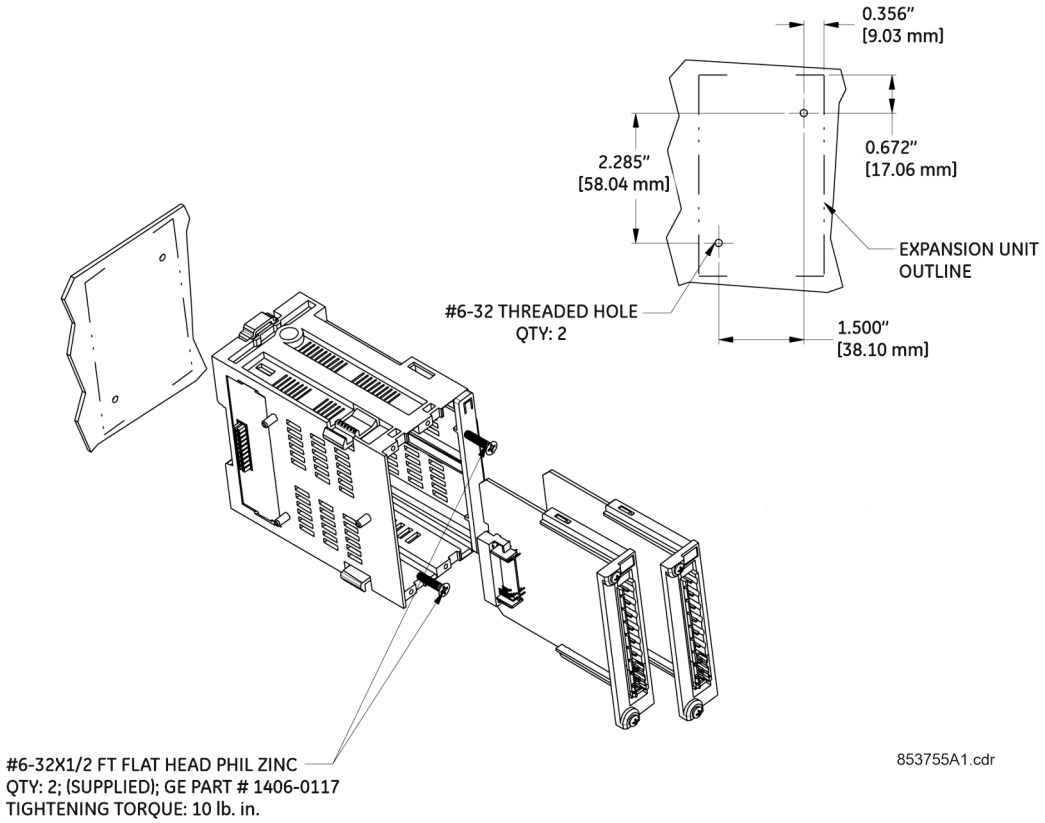

Figure 18: RMIO - Expansion Unit screw mounting

2.9 IP20 BACK COVER

If using the IP20 back cover, follow these installation steps.

1. Place the IP20 cover in the orientation shown over the CT/VT terminal blocks, routing wiring through the cover slots.
2. Secure the cover with the 4 screws provided. Suggested tightening torque is 8 lb-in (0.9 Nm).

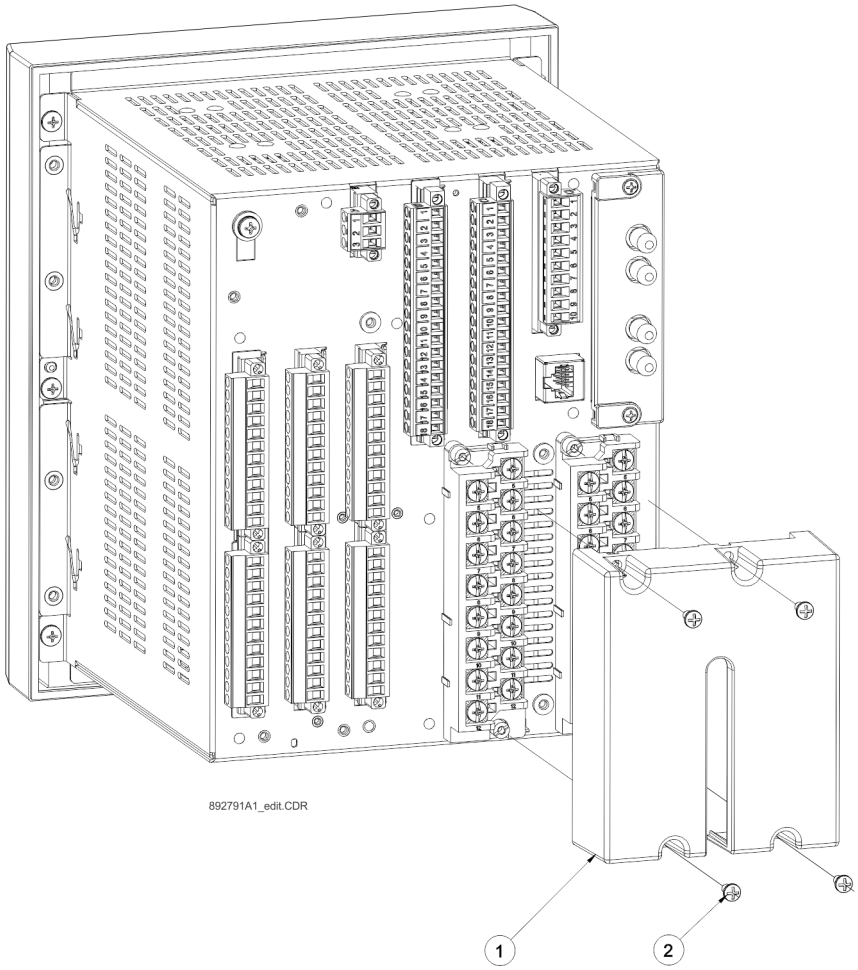

Figure 19: IP20 Back Cover installation

2.10 ARC FLASH SENSOR

The Arc Flash sensor houses the fiber optics and membrane that are used to detect the arc flash. Two mounting screw holes are provided to affix the sensors to the panel.

Caution:
If the Arc Flash Protection is used, operands for Arc Flash sensor failures must be assigned to an auxiliary output relay. This must be connected to the control logic of the breaker equipment to ensure safe operations when the output relay is asserted. In the event of this assertion, the Hazard Reduction Category code cannot be maintained unless backup protection is continuing to maintain it.

Caution:
Arc Flash sensor fiber is pressure sensitive and must be handled carefully to avoid damage. Read the following guidelines fully before proceeding.

Take care when handling the Arc Flash sensor fiber.

- Do not bend the sensor fiber sharply (with a radius of less than 25 mm (1 inch)). Sharp bends can damage the fiber. Do not pull or tug loops of sensor fiber, as sharp bends may result.
- Do not clamp the sensor fiber tightly during installation. The sensor fiber should be held in place loosely for the best long-term performance. Avoid over-tightening ties which may deform or break the sensor fiber.
- Do not pull or tug sensor fiber with force, as this may cause internal damage or separate the fiber from the cable connector.
- Do not twist the sensor fiber, as twisting can damage the fiber resulting in substandard performance.
- Do not attach sensor fiber directly to the bus.
- Avoid surface temperatures above 70°C or 158°F to prolong the life of the fiber.
- Secure all sensor fibers (loosely but securely) away from any moving parts.
- Use the factory-provided dust caps on all Arc Flash sensor fiber and connectors when not in use, to avoid dust contamination in the transceiver and sensor plugs.

Installlation

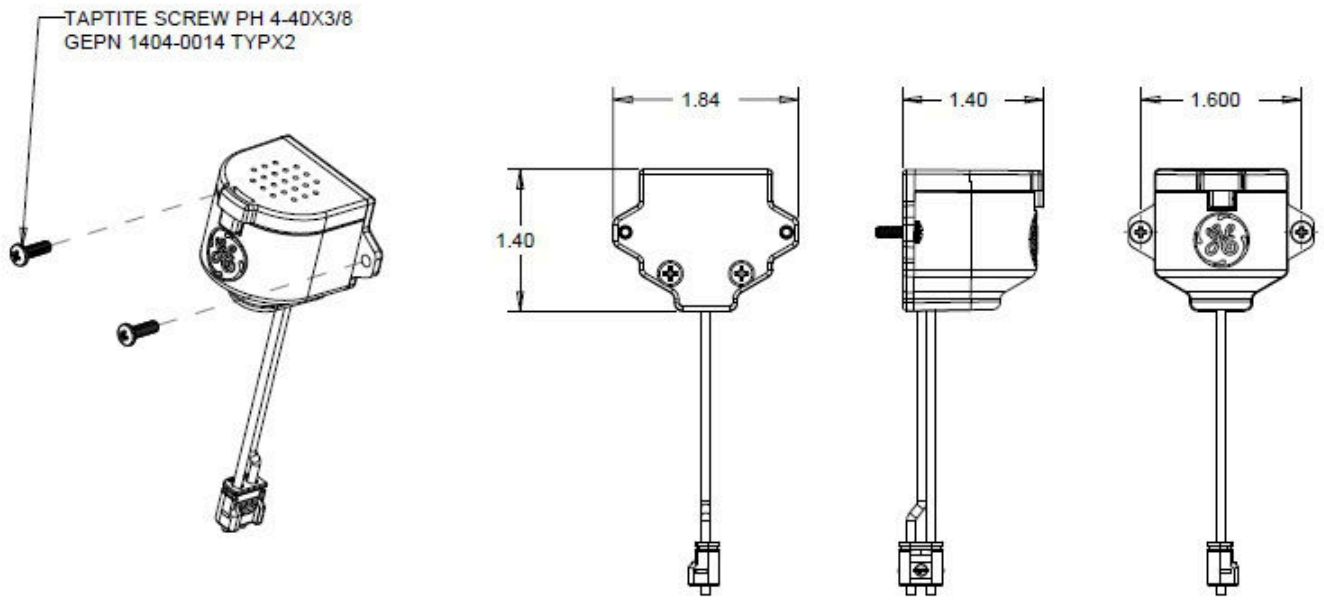

Figure 20: AF Sensor - front, side and top view

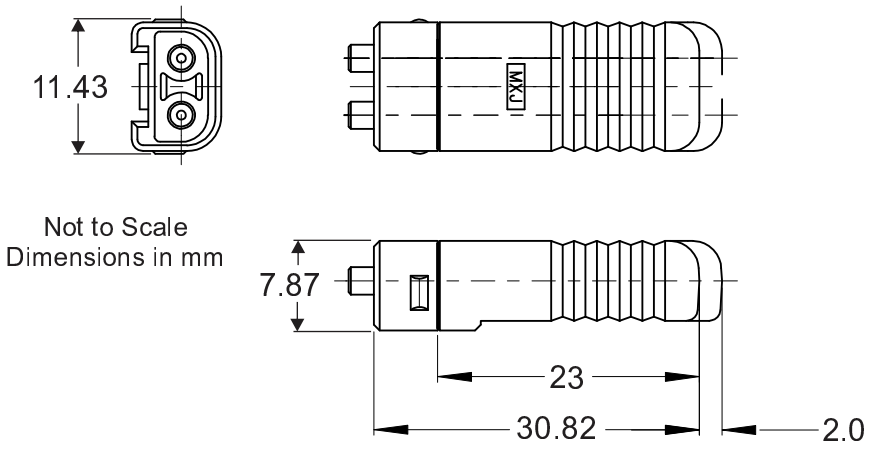

Figure 21: AF Sensor - dimensions of sensor tip

> *Note:*
> *The sensor fiber should be secured loosely for the best long-term performance. Avoid over-tightening ties which may deform or break the sensor fiber.*

Before installing the AF sensor unit, ensure that all other drilling and installation is complete to minimize possible damage to the sensitive unit.

To install the AF sensor and route the sensor fiber, follow these steps:

1. Choose a location for the sensor clear of any obstructions that could shield the sensor from arc flash light.
2. Mount the sensor securely, using the mounting screw holes.
3. Once the sensor is securely mounted, carefully route the sensor fiber from the AFS sensor to the base unit, minimizing loops and curves for the strongest possible signal.
4. Secure all sensor fibers (loosely but securely) away from any moving parts.

Note:
Both the AF sensor connections (CH 1 through CH 4) and the sensor cables are shipped with dust caps in place to avoid dust contamination. The small rubber dust caps must be removed before operation.

2.11 PHYSICAL CONSIDERATIONS OF WIRING

When installing two lugs on one terminal, both lugs must be oriented as shown in the picture below. This is to ensure the adjacent lower terminal block does not interfere with the lug body.

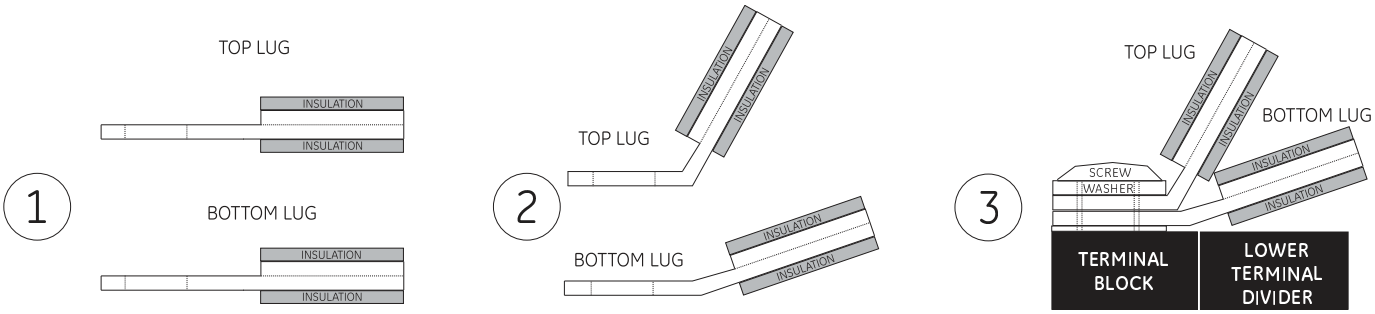

Figure 22: Positioning the lugs correctly

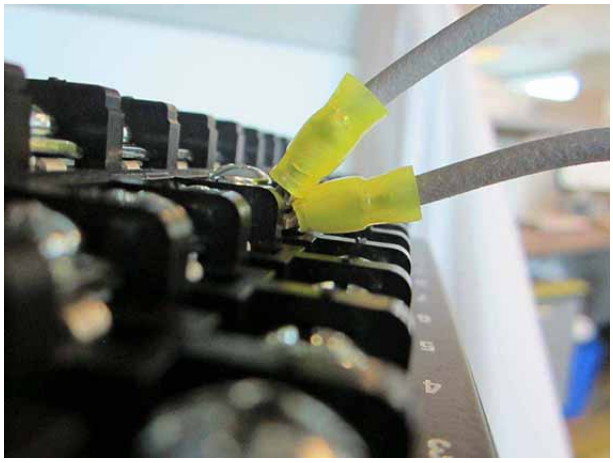

Figure 23: Correct Installation Method

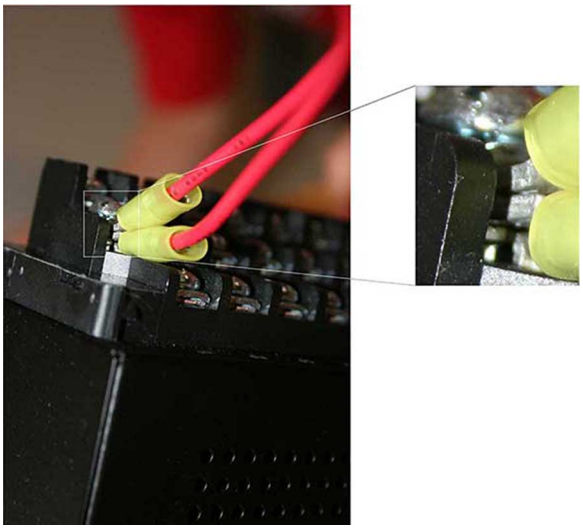

Figure 24: INCORRECT INSTALLATION METHOD (lower lug reversed)

2.11.1 TERMINAL STRIP TYPES

There are two types of removable terminal strips as shown: right-angle plugs with side screw connections, and straight plugs with front screw connections.

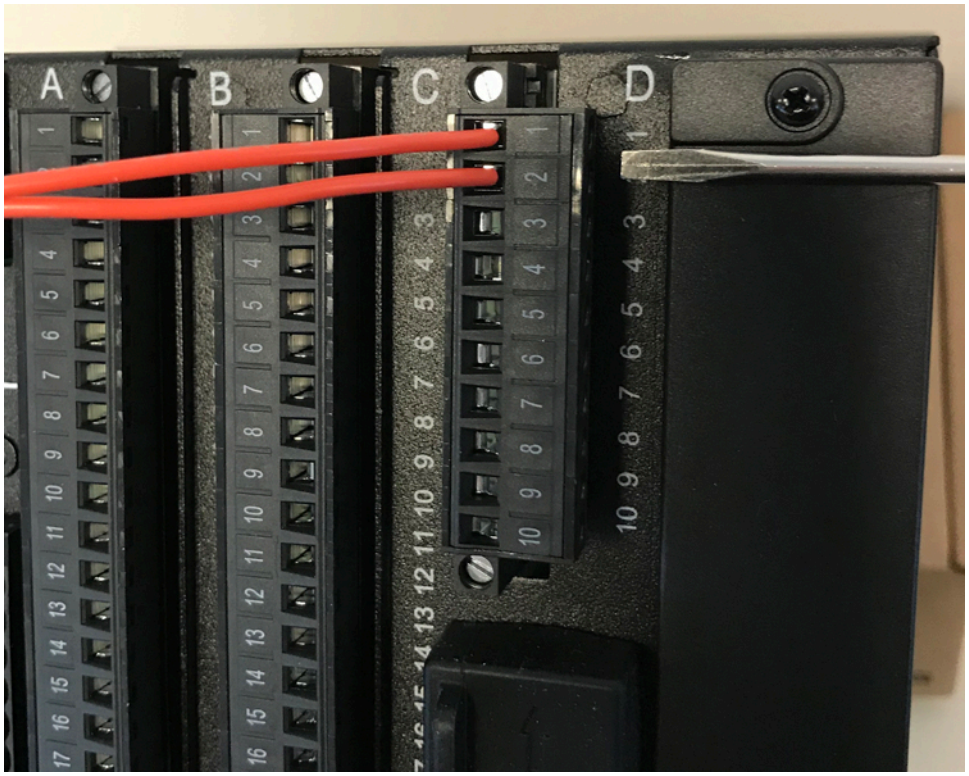

Figure 25: Right-angle plugs with side screw connections

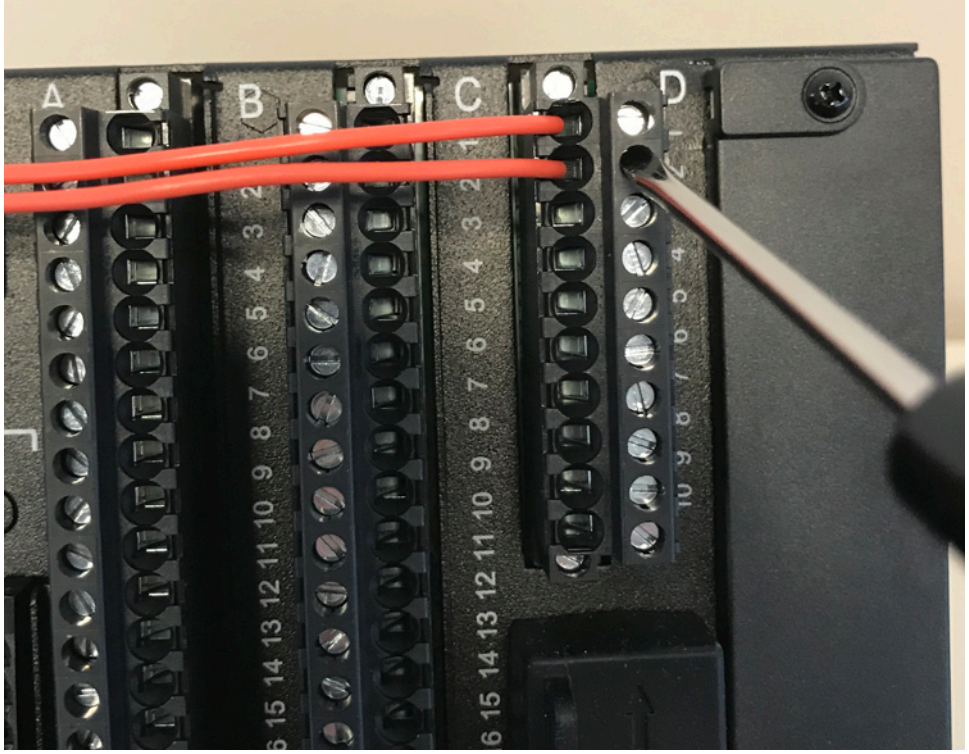

Figure 26: Straight plugs with front screw connections

2.11.2 WIRE SIZE

Use the following guideline for wiring to terminal strips A, B, C, D, F, G, H:

- 12 AWG to 24 AWG
- Suggested wiring screw tightening torque: 4.5 in-lbs (0.5 N-m)
- Usage of ferrules or pin terminals is recommended
- Suggested wire stripping / pin contact length:
  - Right-angle connection type plug: 7 to 8 mm
  - Front connection type plug: 12 mm

Use the following guideline for wiring to terminal blocks J, K:

- 12 AWG to 22 AWG (3.3 mm^2 to 0.3 mm^2): Single wire termination with/without 9.53 mm (0.375”) maximum diameter ring terminals.
- 14 AWG to 22 AWG (2.1 mm^2 to 0.3 mm^2): Multiple wire termination with 9.53 mm (0.375”) maximum diameter ring terminals. Two ring terminals maximum per circuit.
- Suggested wiring screw tightening torque: 15 in-lb (1.7 N-m)
- Suggested mounting screw tightening torque (to attach terminal block to chassis): 8 in-lb (0.9 N-m)

2.12 TERMINAL CONNECTIONS

All the terminal strips are labeled with a slot letter to identify the module slot position and numbers to identify the terminals within the module.

> *Note:*
> *Make sure that the first letter on the terminal strip corresponds to the slot location identified on the chassis silkscreen.*

Due to the possible number of applications, it is not possible to present typical connections for all possible schemes. The information in this section covers the main aspects of interconnectivity, in the general areas of inputs, outputs, communications and grounding. The figure below shows the rear terminal layout of the 8 Series platform.

2.12.1 GENERAL CONNECTIONS

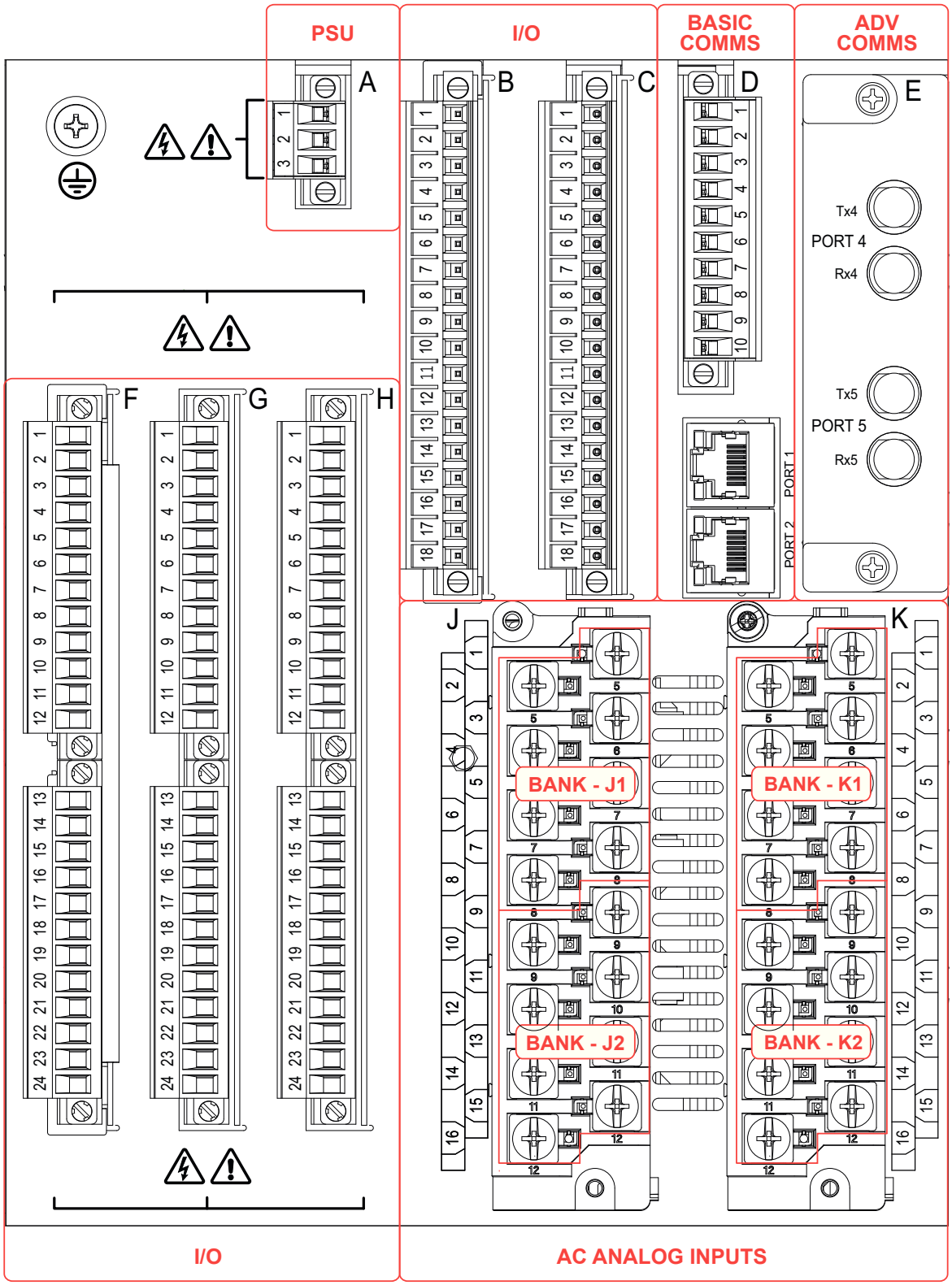

Figure 27: Rear Terminal Layout of the Platform

Power Supply

H - HV Power Supply		L - LV Power Supply	
Terminal	**Description**	**Terminal**	**Description (DC Voltage input polarity)**
1	Line	1	+ve (positive)
2	Neutral	2	-ve (negative)
3	Ground	3	Ground

Communications

SE - Comms - Basic Ethernet		1E/1P/3E/3A - Comms - Advanced Ethernet	
Terminal	**Description**	**Terminal**	**Description**
1	IRIG-B (+)	1	IRIG-B (+)
2	IRIG-B (-)	2	IRIG-B (-)
3	RS485_1 (+)	3	RS485_1 (+)
4	RS485_1 (-)	4	RS485_1 (-)
5	RS485_1 COM	5	RS485_1 COM
6	RESERVED	6	RESERVED
7	RESERVED	7	RESERVED
8	optional RMIO COM	8	optional RMIO COM
9	optional RMIO +	9	optional RMIO +
10	optional RMIO -	10	optional RMIO -
RJ45	ETHERNET	RJ45	NOT USED

2.13 TERMINAL IDENTIFICATION

Optional I/O Card A, slot F, G, or H

F/G/H1		NO	TRIP	OUTPUT RELAYS
F/G/H2		COMMON		
F/G/H3		OPT/V		
F/G/H4		NO	CLOSE /AUX	
F/G/H5		COMMON		
F/G/H6		OPT/V		
F/G/H7		NC	AUX	
F/G/H8		COMMON		
F/G/H9		NO		
F/G/H10		NC	AUX	
F/G/H11		COMMON		
F/G/H12		NO		
F/G/H13	+	DIGITAL INPUT 1	THRESHOLD SETTING GROUP 1	DIGITAL INPUTS
F/G/H14	+	DIGITAL INPUT 2		
F/G/H15	+	DIGITAL INPUT 3		
F/G/H16	+	DIGITAL INPUT 4		
F/G/H17	+	DIGITAL INPUT 5		
F/G/H18	+	DIGITAL INPUT 6		
F/G/H19	+	DIGITAL INPUT 7		
F/G/H20	–	COMMON		
F/G/H21	+	DC +24V		
F/G/H22		NC	AUX*	
F/G/H23		COMMON		
F/G/H24		NO		

Optional I/O Card M, slot F, G, or H

F/G/H1		COMMON	HSHB 1 (with Vmon)	OUTPUT RELAYS
F/G/H2		NO		
F/G/H3		RESERVED		
F/G/H4		COMMON	HSHB 2 (with Vmon)	
F/G/H5		NO		
F/G/H6		RESERVED		
F/G/H7		COMMON	HSHB 3 (w/o Vmon)	
F/G/H8		NO		
F/G/H9		RESERVED		
F/G/H10		COMMON	HSHB 4 (w/o Vmon)	
F/G/H11		NO		
F/G/H12		RESERVED		
F/G/H13	+	DIGITAL INPUT 1	THRESHOLD SETTING GROUP 1	DIGITAL INPUTS
F/G/H14	+	DIGITAL INPUT 2		
F/G/H15	+	DIGITAL INPUT 3		
F/G/H16	+	DIGITAL INPUT 4		
F/G/H17	+	DIGITAL INPUT 5		
F/G/H18	+	DIGITAL INPUT 6		
F/G/H19	+	DIGITAL INPUT 7		
F/G/H20	–	COMMON		
F/G/H21	+	DC +24V		
F/G/H22		NC	FORM C CFR*	
F/G/H23		COM		
F/G/H24		NO		

Optional I/O Card L, slot G

G1	+	ANALOG OUTPUT 1	ANALOG OUTPUTS
G2	+	ANALOG OUTPUT 2	
G3	+	ANALOG OUTPUT 3	
G4	+	ANALOG OUTPUT 4	
G5	+	ANALOG OUTPUT 5	
G6	+	ANALOG OUTPUT 6	
G7	+	ANALOG OUTPUT 7	
G8	–	RETURN	
G9	–	SHIELD	
G10	+	ANALOG INPUT 1	ANALOG INPUTS
G11	+	ANALOG INPUT 2	
G12	+	ANALOG INPUT 3	
G13	+	ANALOG INPUT 4	
G14	–	RETURN	
G15	–	SHIELD	
G16		RESERVED	
G17		RESERVED	
G18		RESERVED	
G19	+	HOT	RTD
G20	+	COMP	
G21	–	RETURN	
G22	–	SHIELD	
G23		RESERVED	
G24		RESERVED	

Optional I/O Card R or S**, slot B or C

B1/C1		HOT	RTD 1
B2/C2		COMP	
B3/C3		RETURN	RTD 1/2
B4/C4		HOT	RTD 2
B5/C5		COMP	
B6/C6		HOT	RTD 3
B7/C7		COMP	
B8/C8		RETURN	RTD 3/4
B9/C9		SHIELD	
B10/C10		HOT	RTD 4
B11/C11		COMP	
B12/C12		HOT	RTD 5
B13/C13		COMP	
B14/C14		RETURN	RTD 5/6
B15/C15		HOT	RTD 6
B16/C16		COMP	
B17/C17		SHIELD	
B18/C18		RESERVED	

Optional I/O Card F, slot H

H1	+	DIGITAL INPUT 1	DIGITAL INPUTS
H2	+	DIGITAL INPUT 2	
H3	+	DIGITAL INPUT 3	
H4	+	DIGITAL INPUT 4	
H5	+	DIGITAL INPUT 5	
H6	+	DIGITAL INPUT 6	
H7	+	DIGITAL INPUT 7	
H8	+	DIGITAL INPUT 8	
H9	+	DIGITAL INPUT 9	
H10	+	DIGITAL INPUT 10	
H11	–	COMMON	
H12	+	+24 V	

CH1		FIBER INPUT 1	ARC FLASH
CH2		FIBER INPUT 2	
CH3		FIBER INPUT 3	
CH4		FIBER INPUT 4	

894213B1.cdr

NOTES:
- Digital Input/Output numbering is sequential starting with Slot F
- RTD numbering is sequential starting with Slot B
- HSHB Output does not have polarity requirements for functionality

* This output is the Critical Fail Relay (CFR) when used in Slot F only

** Card S also supports 10 Ohm Copper RTD

Figure 28: Optional I/O card terminal mappings

AC Analog

AC Inputs - 1 X 3-Phase 1/5A CT, 4 VT (Slot J)			AC Inputs - 1 X 3-Phase 1/5A CT, 4 VT (Slot K-P1/P5)			AC Inputs -2 X 3 - Phase 1/5A CT, 4 VT (Slot K - R1/R5)	
Terminal	**Description**		**Terminal**	**Description**		**Terminal**	**Description**
1	CT1 PhA		1	CT2 PhA		1	CT2 PhA
2	CT1 PhA RETURN		2	CT2 PhA RETURN		2	CT2 PhA RETURN

AC Inputs - 1 X 3-Phase 1/5A CT, 4 VT (Slot J)			AC Inputs - 1 X 3-Phase 1/5A CT, 4 VT (Slot K-P1/P5)			AC Inputs -2 X 3 - Phase 1/5A CT, 4 VT (Slot K - R1/R5)	
Terminal	**Description**		**Terminal**	**Description**		**Terminal**	**Description**
3	CT1 PhB		3	CT2 PhB		3	CT2 PhB
4	CT1 PhB RETURN		4	CT2 PhB RETURN		4	CT2 PhB RETURN
5	CT1 PhC		5	CT2 PhC		5	CT2 PhC
6	CT1 PhC RETURN		6	CT2 PhC RETURN		6	CT2 PhC RETURN
7	CT1 N/G		7	CT2_N/G/SG/CBCT		7	CT2 N/G
8	CT1 N/G RETURN		8	CT2 N/G/SG/CBCT RETURN		8	CT2 N/G RETURN
9	VT1A IN		9	VT2A IN		9	CT3 PhA
10	VT1A RETURN		10	VT2A RETURN		10	CT3 PhA RETURN
11	VT1B IN		11	VT2B IN		11	CT3 PhB
12	VT1B RETURN		12	VT2B RETURN		12	CT3 PhB RETURN
13	VT1C IN		13	VT2C IN		13	CT3 PhC
14	VT1C RETURN		14	VT2C RETURN		14	CT3 PhC RETURN
15	VT1N IN		15	VT2N IN		15	CT3_N/G
16	VT1N RETURN		16	VT2N RETURN		16	CT3 N/G RETURN

2.14 RMIO MODULE INSTALLATION

The optional remote module (RMIO) is designed to be mounted near the load to be monitored. This eliminates the need for multiple RTD cables to run back from the installation, which may be in a remote location, to the switchgear.

Although the RMIO is internally shielded to minimize noise pickup and interference, it should be mounted away from high current conductors or sources of strong magnetic fields.

Figure 29: RMIO unit showing 2 IO_G modules

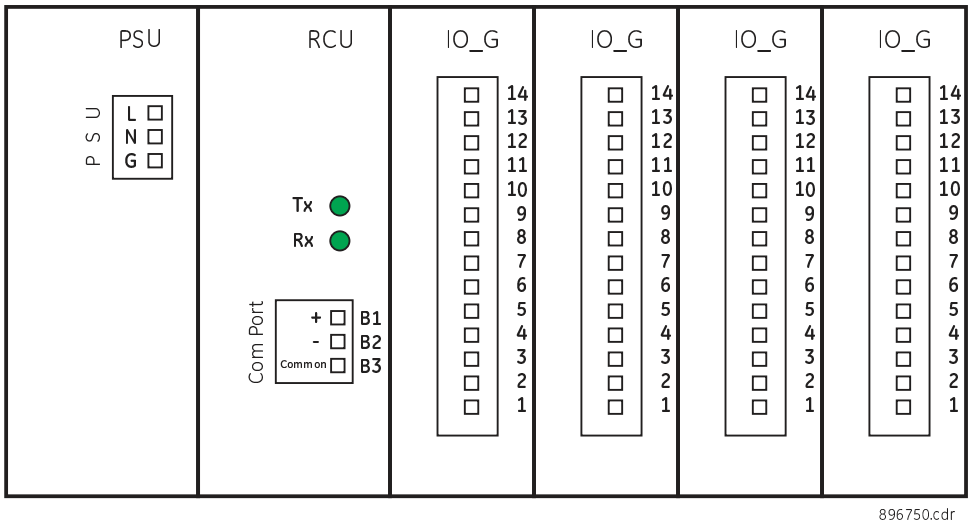

Figure 30: RMIO terminal identification with 4 IO_G modules

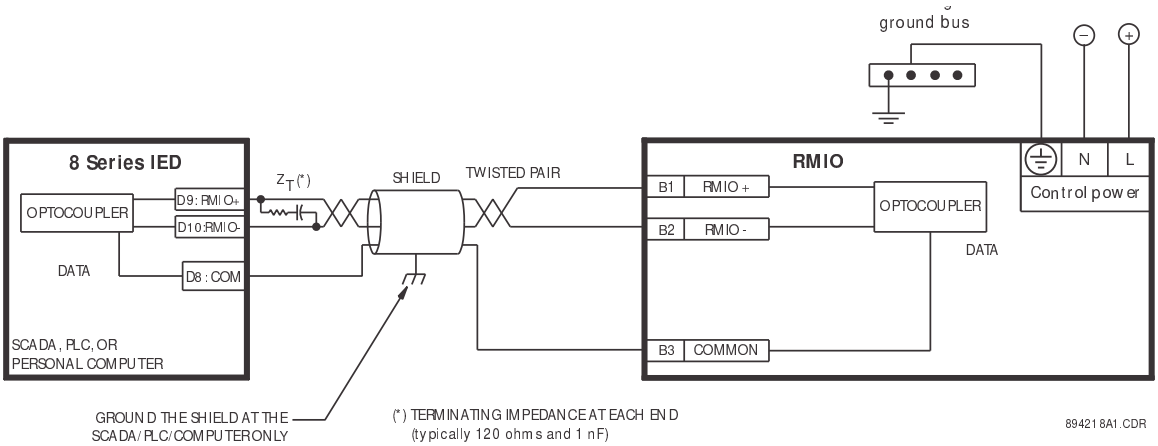

Figure 31: RMIO wiring diagram

2.15 PHASE SEQUENCE AND TRANSFORMER POLARITY

For correct operation of the relay features, follow the instrument transformer polarities, shown in the wiring diagrams. Note the solid square markings that are shown with all instrument transformer connections. When the connections adhere to the drawing, the arrow shows the direction of power flow for positive watts and the positive direction of lagging vars. The phase sequence is user programmable for either ABC or ACB rotation.

Depending on order code, the relay can have up to four (4) current inputs in each J slot and K slot. Three of them are used for connecting to the phase CT phases A, B, and C. The fourth input is a ground input that can be connected to either a ground CT placed on the neutral from a Wye connected transformer winding, or to a donut type CT measuring the zero sequence current from a grounded system. The relay CTs are placed in a packet mounted to the chassis of the relay. There are no internal ground connections on the current inputs. Current transformers with 1 to 12000 A primaries may be used.

Caution:
Verify that the relay's nominal input current of 1 A or 5 A matches the secondary rating of the connected CTs. Unmatched CTs may result in equipment damage or inadequate protection.

Caution:
IMPORTANT: The phase and ground current inputs correctly measure up to 46 times the current input's nominal rating. Time overcurrent curves become horizontal lines for currents above 20 × PKP.

The ground input (Terminals J7 and J8) is used in conjunction with a Zero Sequence CT as source, or in the neutral of wye-connected source CTs. The ground current input can be used to polarize both the neutral and sensitive ground directional elements. When using the residual connection, set the ***GROUND CT PRIMARY*** setpoint to a value equal to the ***PHASE CT PRIMARY*** setpoint. The sensitive ground current input is intended for use either with a CT in a source neutral of a high-impedance grounded system, or on ungrounded systems. On ungrounded systems it is connected residually with the phase current inputs. In this case, the ***SENSTV GND CT PRIMARY*** setpoint should be programmed to a value equal to the ***PHASE CT PRIMARY*** setpoint. The sensitive ground current input can be connected to a Zero Sequence CT for increased sensitivity and accuracy when physically possible in the system.

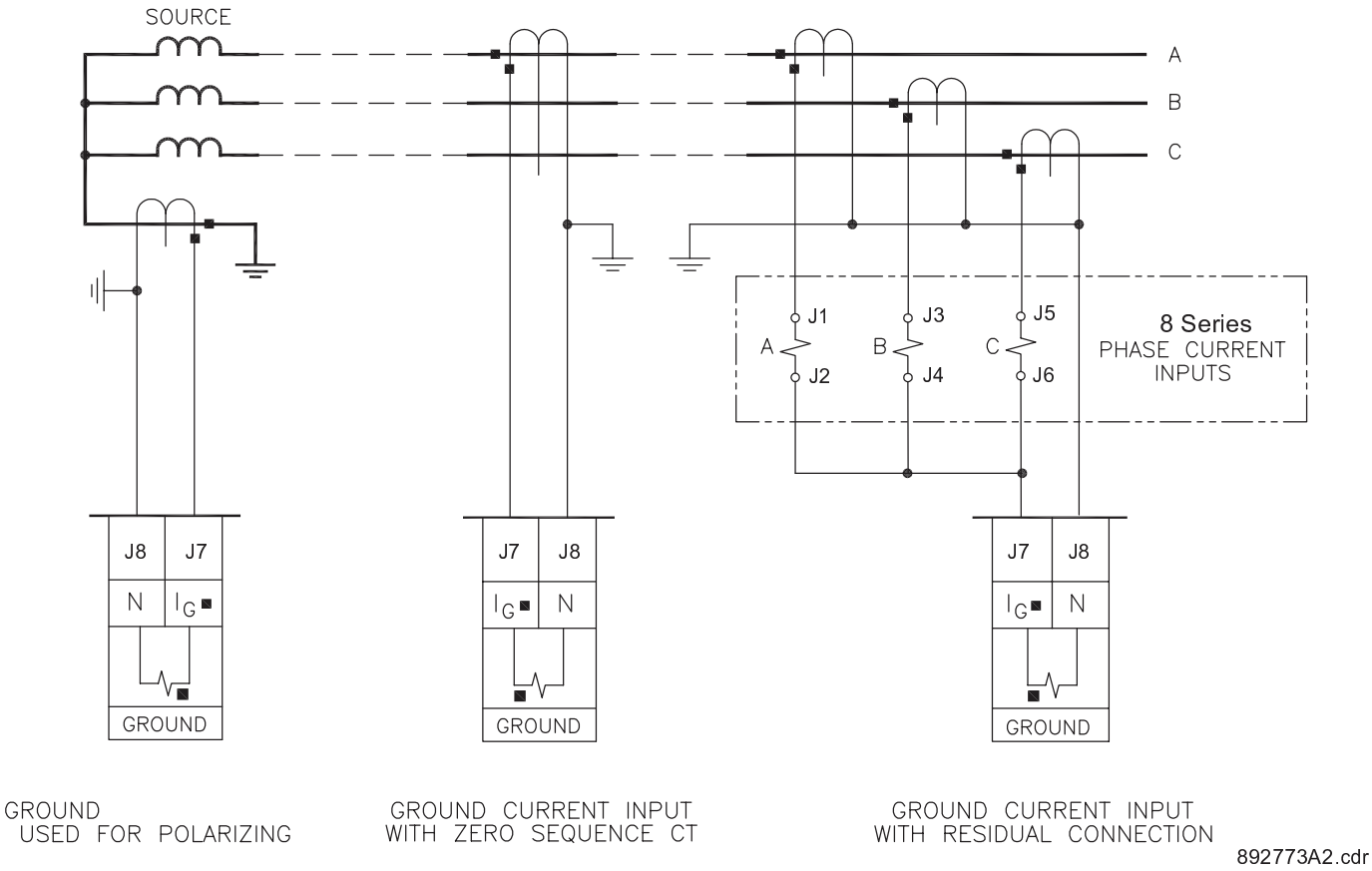

Figure 32: Ground inputs

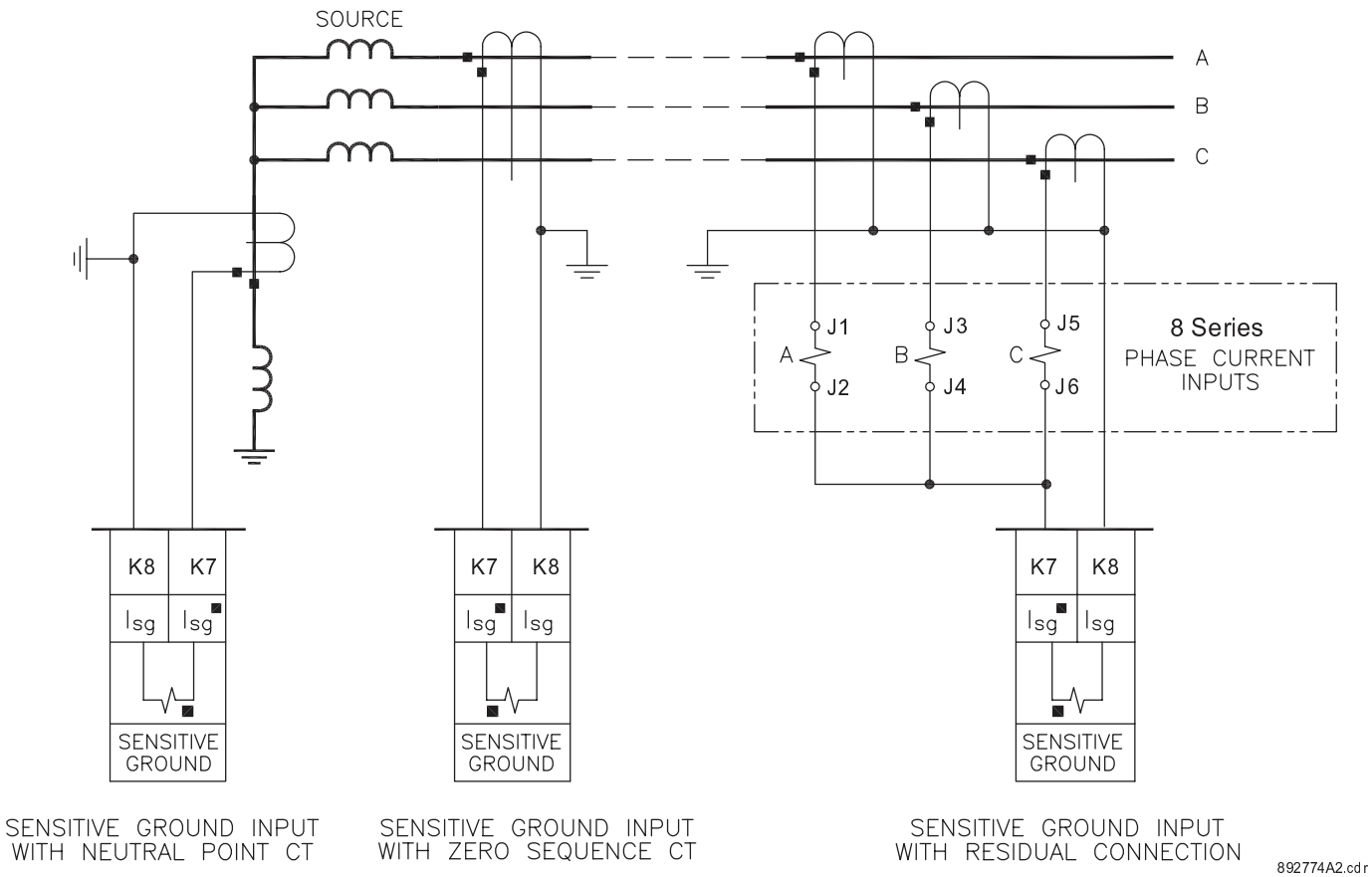

Figure 33: Sensitive ground inputs

Alternatively, the 50:0.025 ground CT input has been designed for sensitive ground current detection on high resistance grounded systems where the GE Digital Energy 50:0.025 corebalance CT is to be used.

For example, in mining applications where earth leakage current must be measured for personnel safety, primary ground current as low as 0.5 A primary may be detected with the GE Digital Energy 50:0.025 CT. Only one ground CT input tap must be used on a given unit.

Note that when this CT input is selected for the Ground Fault function, fixed ratio of 50:0.025 A is used by the relay.

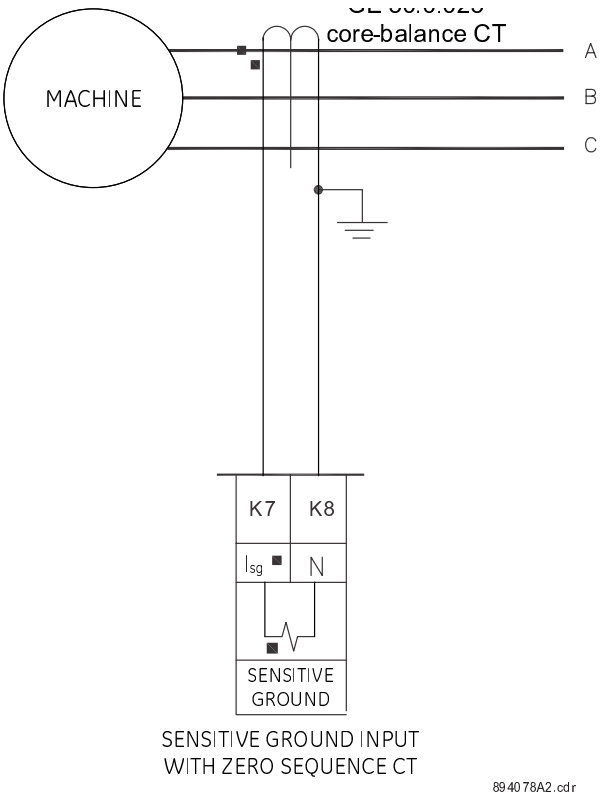

Figure 34: Sensitive Ground Current Input Connections

2.16 ZERO-SEQUENCE CT INSTALLATION

The figure below shows the various CT connections and the exact placement of a Zero Sequence current CT, so that ground fault current can be detected. Twisted pair cabling on the Zero Sequence CT is recommended.

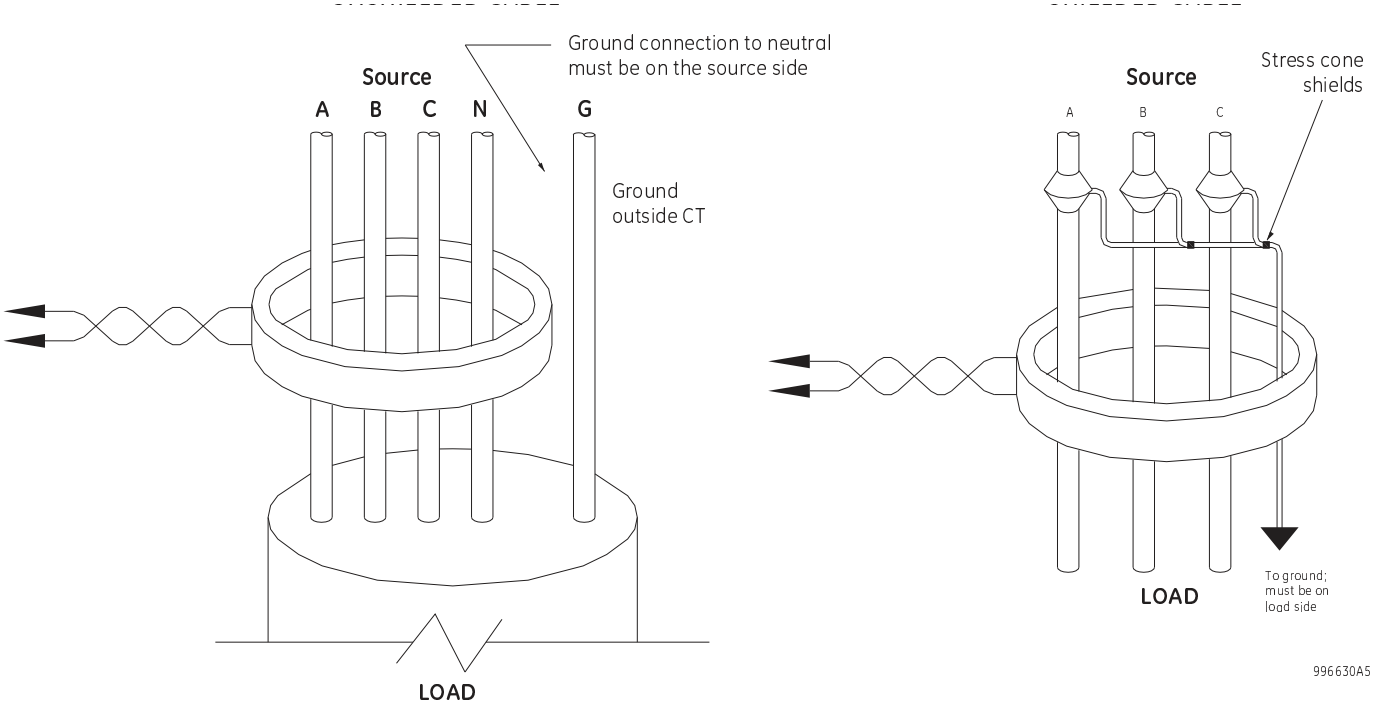

Figure 35: Zero Sequence (Core Balance) CT Installation

2.17 VOLTAGE INPUTS

The relays have four channels for AC voltage inputs, each with an isolating transformer. Voltage transformers up to a maximum 5000:1 ratio may be used. The nominal secondary voltage must be in the 10 to 240 V range.

The relay supports wye and delta (or open delta) VT connections. The typical open delta VT wiring diagram is shown in the following figure: Open Delta VT Connections. The typical wye VT wiring diagram is shown in the wiring diagrams.

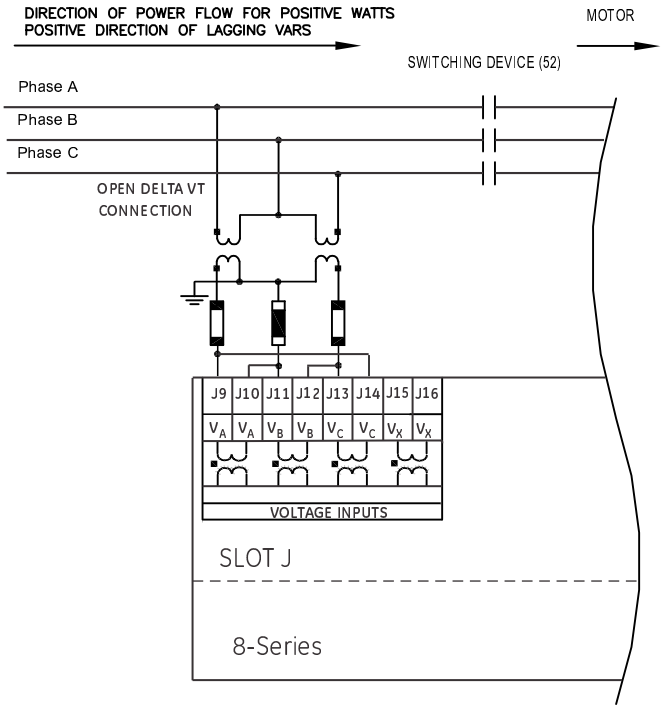

Figure 36: Open Delta VT Connections

2.18 CONTROL POWER

Control power is supplied to the relay such that it matches the relay's installed power supply range.

Caution:
Control power supplied to the relay must match the installed power supply range. If the applied voltage does not match, damage to the unit may occur. All grounds MUST be connected for normal operation regardless of control power supply type.

For more details, please refer to the power supply section.

Caution:
The relay should be connected directly to the ground bus, using the shortest practical path. A tinned copper, braided, shielding and bonding cable should be used. As a minimum, 96 strands of number 34 AWG should be used. Belden catalog number 8660 is suitable.

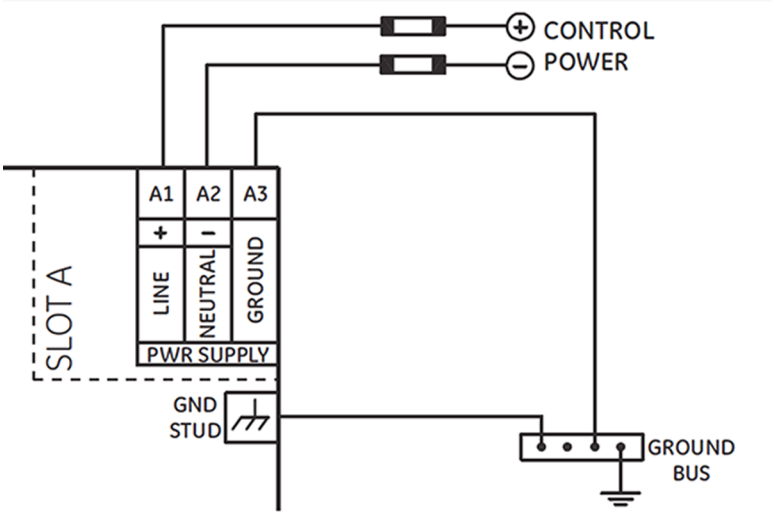

Figure 37: Control Power Connection

2.19 CONTACT INPUTS

Depending on the order code, the relay has a different number of contact inputs which can be used to operate a variety of logic functions for circuit switching device control, external trips, blocking of protection elements, etc. The relay has contact inputs and virtual inputs that are combined in a form of programmable logic to facilitate the implementation of various schemes.

The voltage threshold at which the contact inputs detect a closed contact input is programmable as 17 V DC for 24 V sources, 33 V DC for 48 V sources, 84 V DC for 110 to 125 V sources, and 166 V DC for 250 V sources.

Wet or Dry input signal types can be connected to contact input terminals as shown in the figure: Wet and Dry Contact Input Wiring Examples.

Dry inputs use an internal +24V supply. The voltage threshold must be set to 17V for the inputs to be recognized using the internal +24V.

Note:
The same type of input signal must be connected to all contact inputs on the same contact input card.

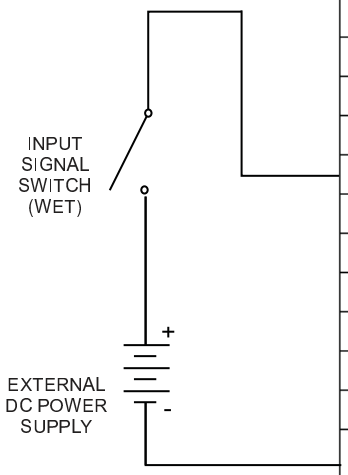

A - HV I/O - 2 FA (Vmon), 3FC, 7 Contact Inputs	
Terminal	**Description**
1	FA_1 COM
2	FA_1 NO
3	FA_1 OPT/V
4	FA_2 COM
5	FA_2 NO
6	FA_2 OPT/V
7	FC_1 NC
8	FC_1 COM
9	FC_1 NO
10	FC_2 NC
11	FC_2 COM
12	FC_2 NO
13	CONTACT IN_1
14	CONTACT IN_2
15	CONTACT IN_3
16	CONTACT IN_4
17	CONTACT IN_5
18	CONTACT IN_6
19	CONTACT IN_7
20	CONTACT IN COM
21	DC +24
22	FC_3 NC (CFR)
23	FC_3 COM (CFR)
24	FC_3 NO (CFR)

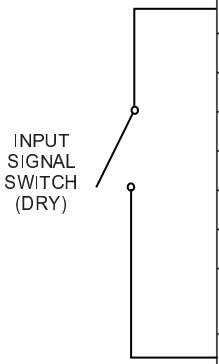

A - HV I/O - 2 FA (Vmon), 3FC, 7 Contact Inputs	
Terminal	**Description**
1	FA_1 COM
2	FA_1 NO
3	FA_1 OPT/V
4	FA_2 COM
5	FA_2 NO
6	FA_2 OPT/V
7	FC_1 NC
8	FC_1 COM
9	FC_1 NO
10	FC_2 NC
11	FC_2 COM
12	FC_2 NO
13	CONTACT IN_1
14	CONTACT IN_2
15	CONTACT IN_3
16	CONTACT IN_4
17	CONTACT IN_5
18	CONTACT IN_6
19	CONTACT IN_7
20	CONTACT IN COM
21	DC +24
22	FC_3 NC (CFR)
23	FC_3 COM (CFR)
24	FC_3 NO (CFR)

Figure 38: Wet and Dry Contact Input Wiring Examples

2.20 OUTPUT RELAYS

The locations of the output relays have a fixed assignment for the platform called the master identifier. I/O options that include inputs occupy the fixed assigned output locations so in these cases the relay assignment maps to the master identifier.

The critical failure output relay is reserved as Relay_8 and it is omitted and is not programmable.

Slots F, G, H Terminal Master Identifier					Slots F,G,H with I/O options A, A, A			
Terminal#	SLOT F	SLOT G	SLOT H		Terminal#	SLOT F	SLOT G	SLOT H
1	RELAY_1	RELAY_9	RELAY_17		1	RELAY_1	RELAY_9	RELAY_17
2	RELAY_1	RELAY_9	RELAY_17		2	RELAY_1	RELAY_9	RELAY_17
3	RELAY_1	RELAY_9	RELAY_17		3	RELAY_1	RELAY_9	RELAY_17
4	RELAY_2	RELAY_10	RELAY_18		4	RELAY_2	RELAY_10	RELAY_18
5	RELAY_2	RELAY_10	RELAY_18		5	RELAY_2	RELAY_10	RELAY_18
6	RELAY_2	RELAY_10	RELAY_18		6	RELAY_2	RELAY_10	RELAY_18
7	RELAY_3	RELAY_11	RELAY_19		7	RELAY_3	RELAY_11	RELAY_19
8	RELAY_3	RELAY_11	RELAY_19		8	RELAY_3	RELAY_11	RELAY_19
9	RELAY_3	RELAY_11	RELAY_19		9	RELAY_3	RELAY_11	RELAY_19
10	RELAY_4	RELAY_12	RELAY_20		10	RELAY_4	RELAY_12	RELAY_20
11	RELAY_4	RELAY_12	RELAY_20		11	RELAY_4	RELAY_12	RELAY_20
12	RELAY_4	RELAY_12	RELAY_20		12	RELAY_4	RELAY_12	RELAY_20
13	RELAY_5	RELAY_13	RELAY_21		13	Digital In_1	Digital In_8	Digital In_15
14	RELAY_5	RELAY_13	RELAY_21		14	Digital In_2	Digital In_9	Digital In_16
15	RELAY_5	RELAY_13	RELAY_21		15	Digital In_3	Digital In_10	Digital In_17
16	RELAY_6	RELAY_14	RELAY_22		16	Digital In_4	Digital In_11	Digital In_18
17	RELAY_6	RELAY_14	RELAY_22		17	Digital In_5	Digital In_12	Digital In_19
18	RELAY_6	RELAY_14	RELAY_22		18	Digital In_6	Digital In_13	Digital In_20
19	RELAY_7	RELAY_15	RELAY_23		19	Digital In_7	Digital In_14	Digital In_21
20	RELAY_7	RELAY_15	RELAY_23		20	Common	Common	Common
21	RELAY_7	RELAY_15	RELAY_23		21	+24V	+24V	+24V
22	RELAY_8	RELAY_16	RELAY_24		22	RELAY_8	RELAY_16	RELAY_24
23	RELAY_8	RELAY_16	RELAY_24		23	RELAY_8	RELAY_16	RELAY_24
24	RELAY_8	RELAY_16	RELAY_24		24	RELAY_8	RELAY_16	RELAY_24

Slots F, G, H with I/O options M, L, F					Slots F,G,H with I/O options A, L, A			
Terminal #	SLOT F	SLOT G	SLOT H		Terminal #	SLOT F	SLOT G	SLOT H
1	RELAY_1	Analog Out_1	Digital In_8		1	RELAY_1	Analog Out_1	RELAY_9

Slots F, G, H with I/O options M, L, F					Slots F,G,H with I/O options A, L, A			
Terminal #	SLOT F	SLOT G	SLOT H		Terminal #	SLOT F	SLOT G	SLOT H
2	RELAY_1	Analog Out_2	Digital In_9		2	RELAY_1	Analog Out_2	RELAY_9
3	Reserved	Analog Out_3	Digital In_10		3	RELAY_1	Analog Out_3	RELAY_9
4	RELAY_2	Analog Out_4	Digital In_11		4	RELAY_2	Analog Out_4	RELAY_10
5	RELAY_2	Analog Out_5	Digital In_12		5	RELAY_2	Analog Out_5	RELAY_10
6	Reserved	Analog Out_6	Digital In_13		6	RELAY_2	Analog Out_6	RELAY_10
7	RELAY_3	Analog Out_7	Digital In_14		7	RELAY_3	Analog Out_7	RELAY_11
8	RELAY_3	Return	Digital In_15		8	RELAY_3	Return	RELAY_11
9	Reserved	Shield	Digital In_16		9	RELAY_3	Shield	RELAY_11
10	RELAY_4	Analog In_1	Digital In_17		10	RELAY_4	Analog In_1	RELAY_12
11	RELAY_4	Analog In_2	Common		11	RELAY_4	Analog In_2	RELAY_12
12	Reserved	Analog In_3	+24V		12	RELAY_4	Analog In_3	RELAY_12
13	Digital In_1	Analog In_4	ARC FLASH Sensor 1 Sensor 2 Sensor 3 Sensor 4		13	Digital In_1	Analog In_4	Digital In_8
14	Digital In_2	Return			14	Digital In_2	Return	Digital In_9
15	Digital In_3	Shield			15	Digital In_3	Shield	Digital In_10
16	Digital In_4	Reserved			16	Digital In_4	Reserved	Digital In_11
17	Digital In_5	Reserved			17	Digital In_5	Reserved	Digital In_12
18	Digital In_6	Reserved			18	Digital In_6	Reserved	Digital In_13
19	Digital In_7	RTD_Hot			19	Digital In_7	RTD_Hot	Digital In_14
20	Common	RTD_Comp			20	Common	RTD_Comp	Common
21	+24V	RTD_Return			21	+24V	RTD_Return	+24V
22	RELAY_8	Shield			22	RELAY_8	Shield	RELAY_16
23	RELAY_8	Reserved			23	RELAY_8	Reserved	RELAY_16
24	RELAY_8	Reserved			24	RELAY_8	Reserved	RELAY_16

Slots F,G,H with I/O options A, A, F					Slots F, G, H with I/O options A, N, F		
Terminal #	SLOT F	SLOT G	SLOT H		Terminal #	SLOT F	SLOT H
1	RELAY_1	RELAY_9	Digital In_15		1	RELAY_1	Digital In_8
2	RELAY_1	RELAY_9	Digital In_16		2	RELAY_1	Digital In_9
3	RELAY_1	RELAY_9	Digital In_17		3	RELAY_1	Digital In_10
4	RELAY_2	RELAY_10	Digital In_18		4	RELAY_2	Digital In_11
5	RELAY_2	RELAY_10	Digital In_19		5	RELAY_2	Digital In_12
6	RELAY_2	RELAY_10	Digital In_20		6	RELAY_2	Digital In_13
7	RELAY_3	RELAY_11	Digital In_21		7	RELAY_3	Digital In_14

Slots F,G,H with I/O options A, A, F					Slots F, G, H with I/O options A, N, F		
Terminal #	**SLOT F**	**SLOT G**	**SLOT H**		**Terminal #**	**SLOT F**	**SLOT H**
8	RELAY_3	RELAY_11	Digital In_22		8	RELAY_3	Digital In_15
9	RELAY_3	RELAY_11	Digital In_23		9	RELAY_3	Digital In_16
10	RELAY_4	RELAY_12	Digital In_24		10	RELAY_4	Digital In_17
11	RELAY_4	RELAY_12	Common		11	RELAY_4	Common
12	RELAY_4	RELAY_12	+24V		12	RELAY_4	+24V
13	Digital In_1	Digital In_8	ARC FLASH Sensor 1 Sensor 2 Sensor 3 Sensor 4		13	Digital In_1	ARC FLASH Sensor 1 Sensor 2 Sensor 3 Sensor 4
14	Digital In_2	Digital In_9			14	Digital In_2	
15	Digital In_3	Digital In_10			15	Digital In_3	
16	Digital In_4	Digital In_11			16	Digital In_4	
17	Digital In_5	Digital In_12			17	Digital In_5	
18	Digital In_6	Digital In_13			18	Digital In_6	
19	Digital In_7	Digital In_14			19	Digital In_7	
20	Common	Common			20	Common	
21	+24V	+24V			21	+24V	
22	RELAY_8	RELAY_16			22	RELAY_8	
23	RELAY_8	RELAY_16			23	RELAY_8	
24	RELAY_8	RELAY_16			24	RELAY_8	

2.21 SERIAL COMMUNICATIONS

One two-wire RS485 port is provided. Up to thirty-two relays can be daisy-chained together on a communication channel without exceeding the driver capability. For larger systems, additional serial channels must be added. Commercially available repeaters can also be used to add more than 32 relays on a single channel. Suitable cable should have a characteristic impedance of 120 ohms and total wire length should not exceed 1,200 meters (4,000 ft).

Voltage differences between remote ends of the communication link are not uncommon. For this reason, surge protection devices are internally installed across all RS485 terminals. Internally, an isolated power supply with an opto-coupled data interface is used to prevent noise coupling.

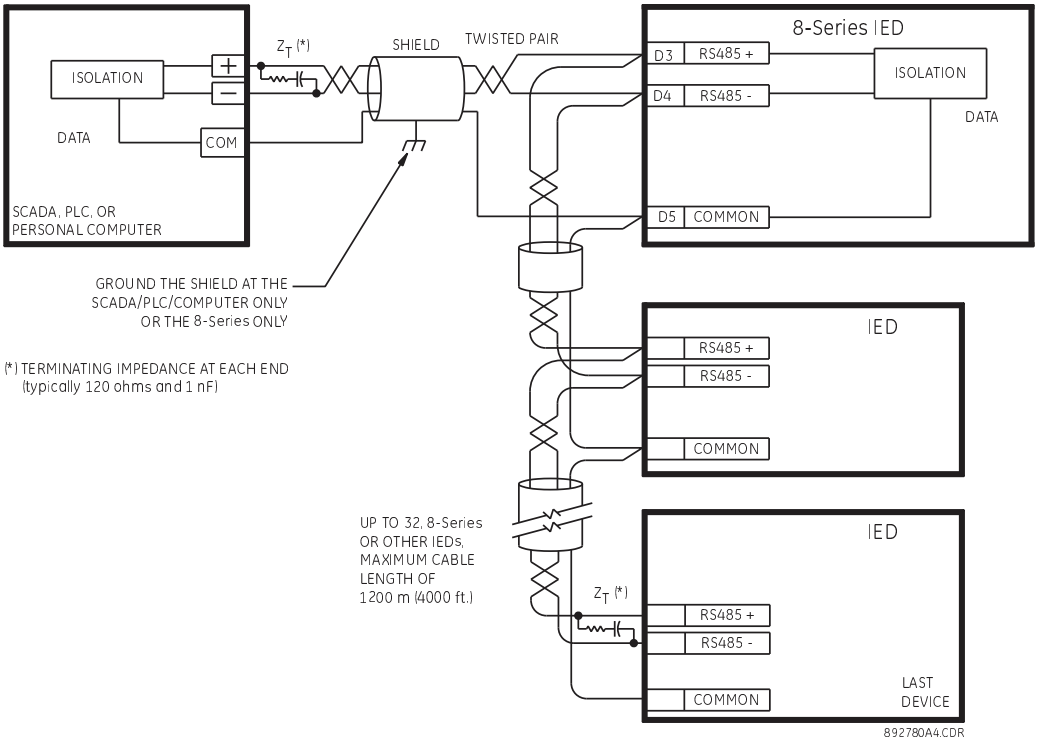

Figure 39: RS485 wiring diagram

Caution:
To ensure that all devices in a daisy-chain are at the same potential, it is imperative that the common terminals of each RS485 port are tied together and grounded at the master end. Failure to do so may result in intermittent or failed communications.

The source computer/PLC/SCADA system should have similar transient protection devices installed, either internally or externally. Ground the shield at one point only, as shown in the figure above, to avoid ground loops. Correct polarity is also essential. The relays must be wired with all the positive (+) terminals connected together and all the negative (–) terminals connected together. Each relay must be daisy-chained to the next one. Avoid star or stub connected configurations. The last device at each end of the daisy-chain should be terminated with a 120 ohm ¼ watt resistor in series with a 1 nF capacitor across the positive and negative terminals. Some systems allow the shield (drain wire) to be used as a common wire and to connect directly to the COM terminal; others function correctly only if the common wire is connected to the COM terminal, but insulated from the shield. Observing these guidelines ensure a reliable communication system immune to system transients.

2.22 IRIG-B

IRIG-B is a standard time code format that allows time stamping of events to be synchronized among connected devices within 1 millisecond. The IRIG-B time code formats are serial, width-modulated codes which can be either DC level shift or amplitude modulated (AM) form. The type of form is auto-detected by the relay. Third party equipment is available for generating the IRIG-B signal; this equipment may use a GPS satellite system to obtain the time reference so that devices at different geographic locations can also be synchronized.

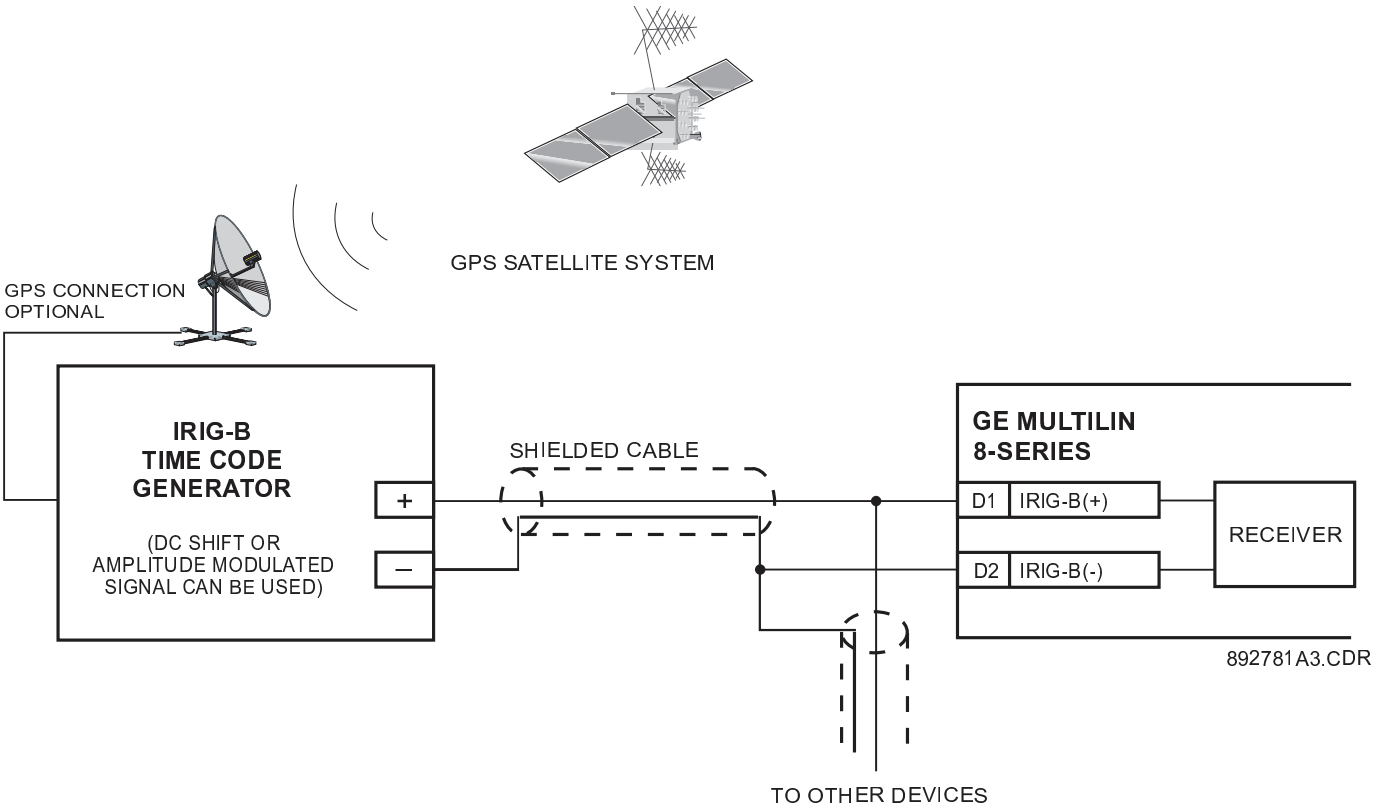

Figure 40: IRIG-B connection

2.23 TYPICAL WIRING DIAGRAMS

The following illustrates the electrical wiring of the Draw out unit.

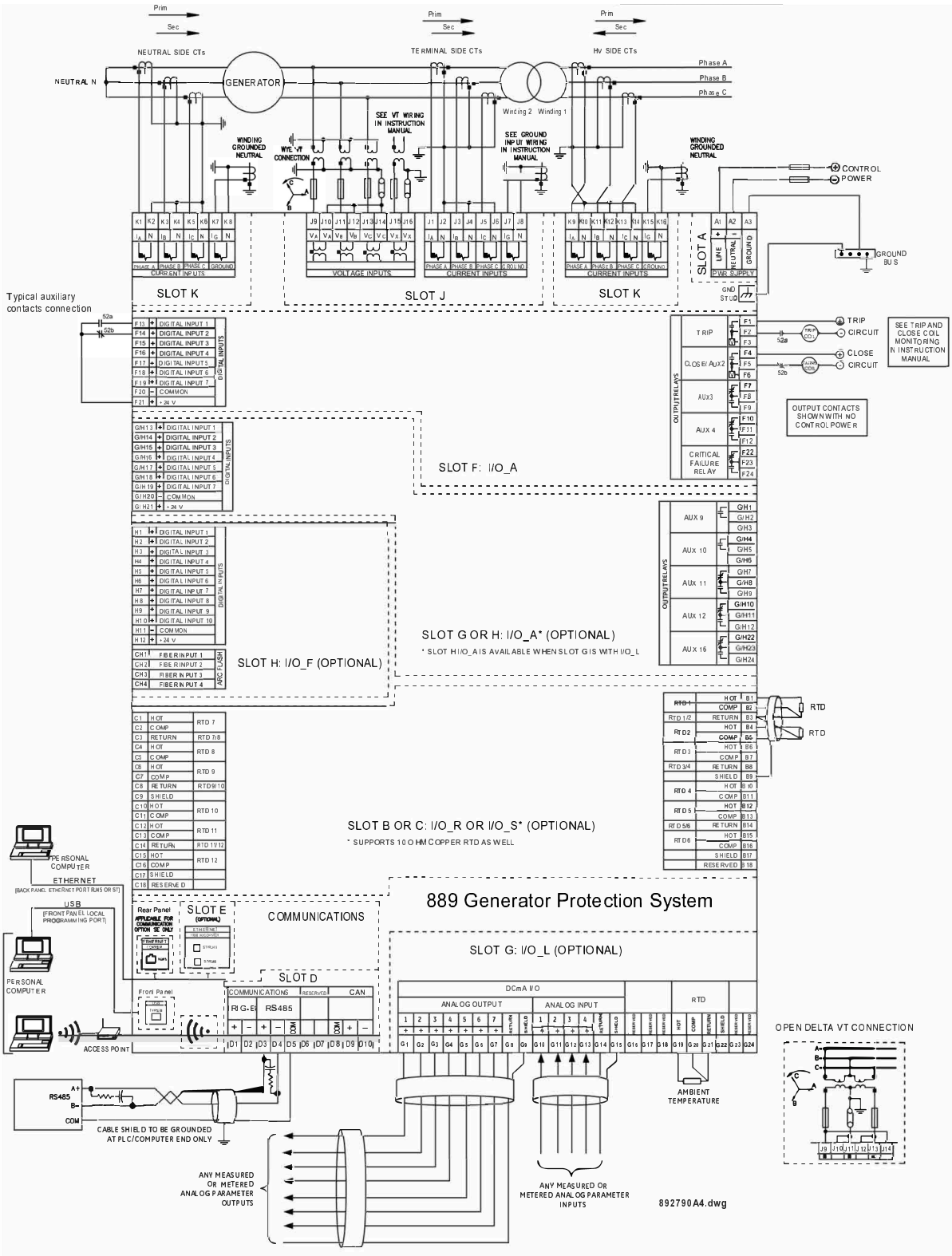

Figure 41: Overall Differential Typical Wiring (892790A4)

CHAPTER 3

INTERFACES

3.1 CHAPTER OVERVIEW

This chapter contains the following sections:

Chapter Overview 70
First access 71
Front panel options 72
Software Interface 89

3.2 FIRST ACCESS

There are two methods of interfacing with the relay.

- Using the relay keypad and display.
- Using the EnerVista D&I Setup software software.

This section provides an overview of the interfacing methods using both of these methods.

When first accessing the relay, log in as Administrator either through the front panel or through EnerVista D&I Setup software connected serially (so that no IP address is required). Use the default password (the default password is **0**).

Basic Security

If the relay is in the commissioning phase and you want to bypass authentication, switch the ***SETPOINT ACCESS*** setting on or assign it to a contact input. Once the setting is on, you have complete administrator access from the front panel. If a contact input is chosen, the access is also conditional on the activation of the respective contact input.

For more information on setpoint access and other security features available with basic security, refer to Basic Security.

CyberSentry

If logging in through EnerVista D&I Setup software, choose Device authentication and login as Administrator.

Note:
If the relay is in the commissioning phase, to bypass authentication use the setpoint access feature to gain administrative access to the front panel in the same way as with basic security.

3.3 FRONT PANEL OPTIONS

The relay can be delivered with following different front panels:

- The 3-pushbutton rugged faceplate (available for models up to 3.xx)
- The 3-pushbutton membrane faceplate (available for all models)

All front panels provide menu navigation through a selection of navigation pushbuttons and a high quality graphical display. Both rugged and membrane faceplate includes 3 programmable function pushbuttons and 17 programmable LEDs.

The following figures show the different options.

Note:
These figures are representative only. They may not reflect the exact model that this manual describes.

Figure 42: 3-pushbutton rugged front panel

Figure 43: 3-pushbutton membrane front panel

3.3.1 GRAPHICAL DISPLAY PAGES

The front panel liquid crystal display (LCD) allows visibility under various lighting conditions. When the keypad and display are not being used and there are no active Targets, the Home screen with system information is displayed after a user-defined period of inactivity. Pressing the **Escape** key during the display of the default message, returns the display to the previous display screen. Any Trip, Alarm, or Pickup operation causing a new active Target is displayed immediately, automatically overriding the Home screen.

3.3.1.1 MENU HIERARCHY

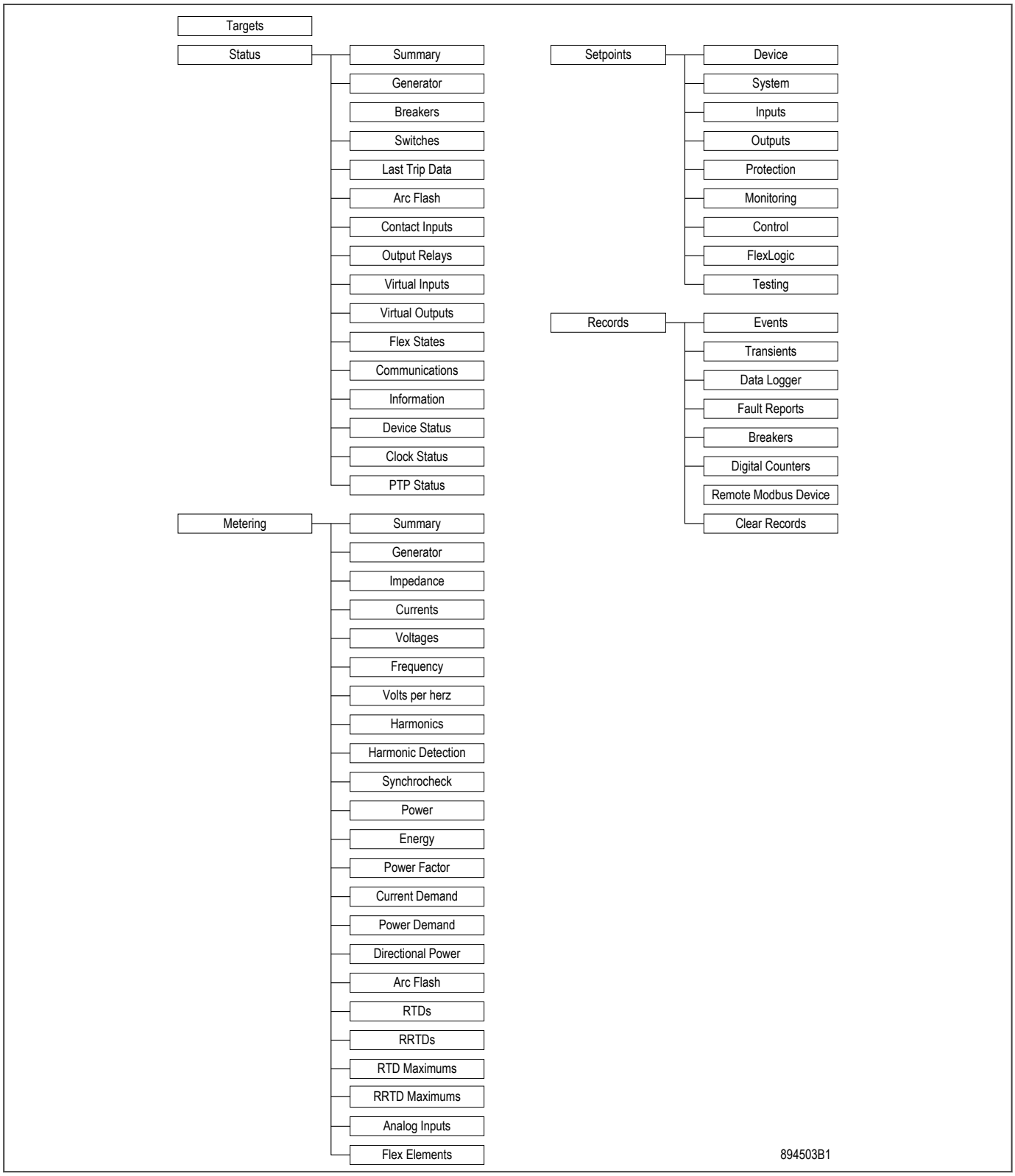

Figure 44: Menu hierarchy

3.3.1.2 WORKING WITH GRAPHICAL DISPLAY PAGES

The display contains five main menu items labeled Targets, Status, Metering, Setpoints, and Records located at the bottom of the screen. Choosing each main menu item displays the corresponding sub-menu.

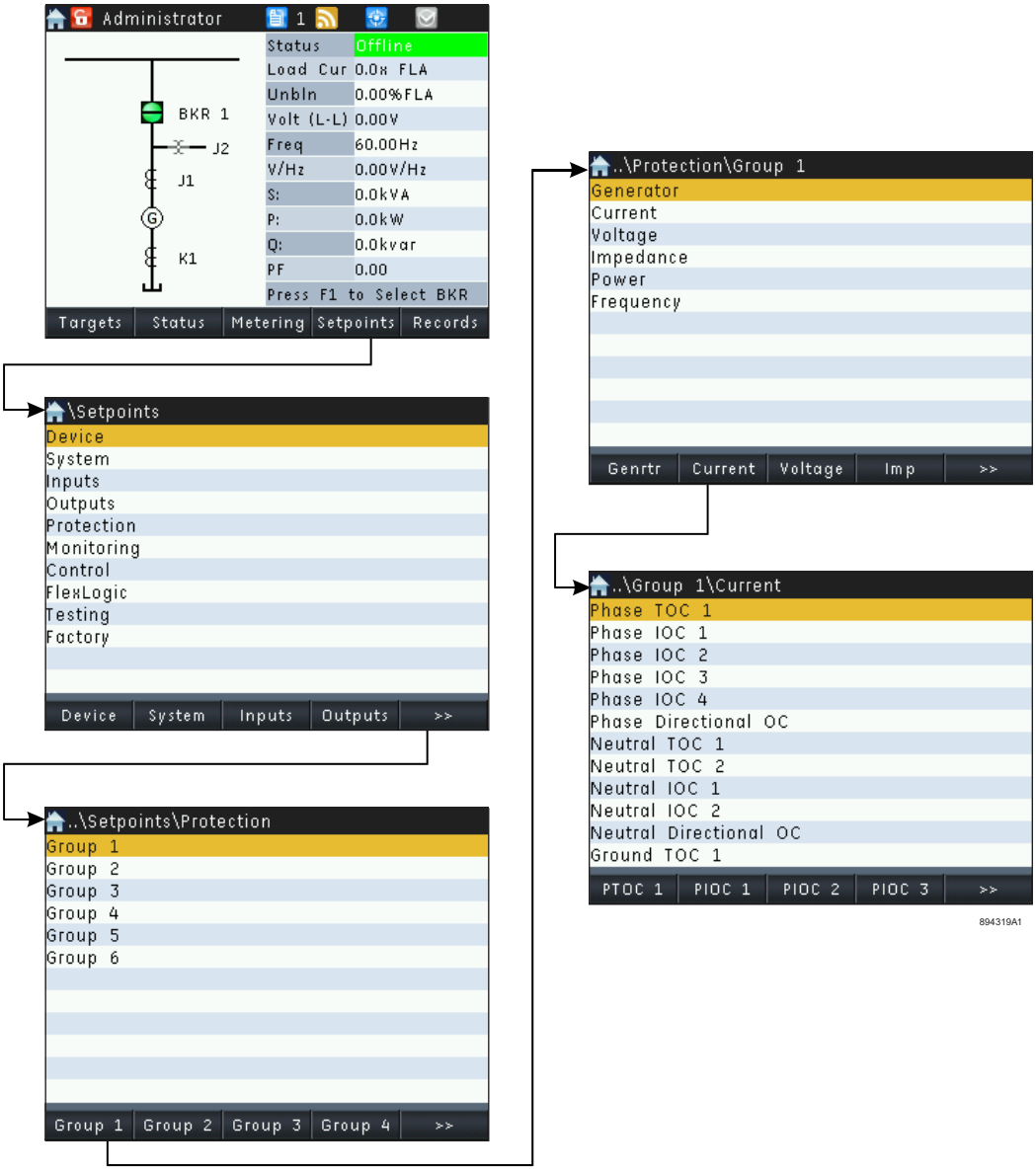

Figure 45: Typical paging

There are two ways of navigating through the menu:

- using the pushbuttons corresponding to the soft tabs from the screen
- by selecting the item from the list of items on the screen using the **Up** and **Down** pushbuttons to move the yellow highlighted line, and pressing the **Enter** pushbutton.

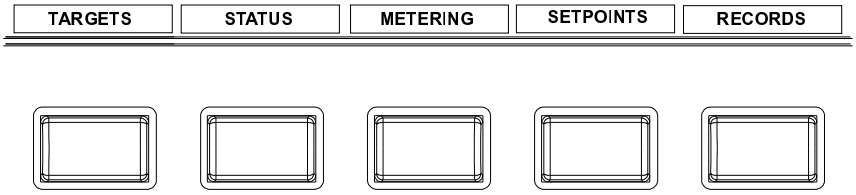

Figure 46: Tab Pushbuttons

The tab pushbuttons are used to enter the menu corresponding to the label on the tabs. If more than 5 tabs exist, the first and the last tab are labeled with arrows to allow you to scroll to the other tabs.

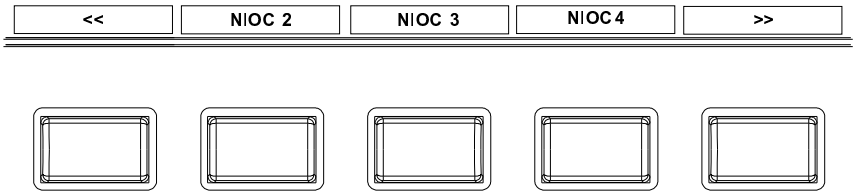

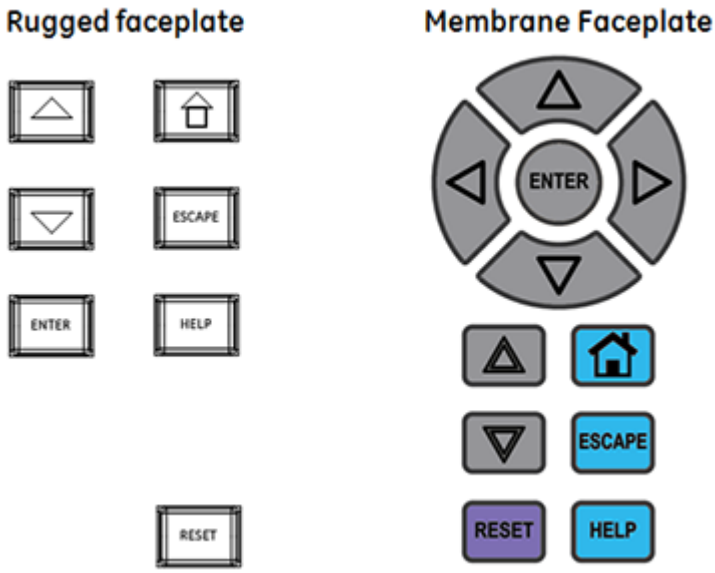

Figure 47: Keypad Pushbuttons

Each Keypad pushbutton serves the following function:

- The **Home** pushbutton is used to display the home screen, and all screens defined under the Front Panel/ Screens menu as default screens.
- The **Help** pushbutton is used to provide the Modbus address corresponding to the present location when in the Actual Values menu.
- The **Enter** pushbutton has a dual function. It is used to display a sub-menu when an item is highlighted. It is also used to save the desired value for any selected setpoint.
- The **Up**, and **Down** pushbuttons are used to select/highlight an item from a menu, as well as select a value from the list of values for a chosen item.

- The **Up**, **Down**, **Left** and **Right** pushbuttons on the membrane faceplate are used to move the yellow highlight. These pushbuttons are also used on special screens to navigate to multiple objects.
- The **Escape** pushbutton is used to display the previous menu. This pushbutton can also be used to cancel a setpoint change.
- The **Reset** pushbutton clears all latched LED indications, target messages, and latched output relays, providing the conditions causing these events are not present.

To change (or view) an item on (or from) the menus:

- Use the pushbuttons that correspond to the tabs (Targets, Status, Metering, Setpoints, Records) on the screen to select a menu.
- Use the **Up** and **Down** pushbuttons to highlight an item.
- Press **Enter** to view a list of values for the chosen item. (Some items are view-only.)
- Use the **Up** and **Down** pushbuttons to highlight a value.
- Press **Enter** to assign the highlighted value to the item.

3.3.1.3 SINGLE LINE DIAGRAM

BKR1 LED setting for Breaker symbol color configuration

In all devices the Breaker symbol color is configurable as per the color scheme setting in ***Setpoints*** > ***Device*** > ***Front Panel*** > ***Display Properties*** > ***Color Scheme***.

Single Line Diagram for 889 and Breaker/Generator status color

The relay has a single line diagram (SLD) that represents the power system. The single line diagram provided is pre-configured to show:

- Breaker status
- Generator status
- AC input connection
- Summary of measured online parameters

Accompanying the single line diagram are typical metered values associated with the power system.

The single line diagram is configured as the default menu but this can be changed under ***Setpoints*** > ***Device*** > ***Front Panel*** > ***Default Screen (3-P1/P5)***.

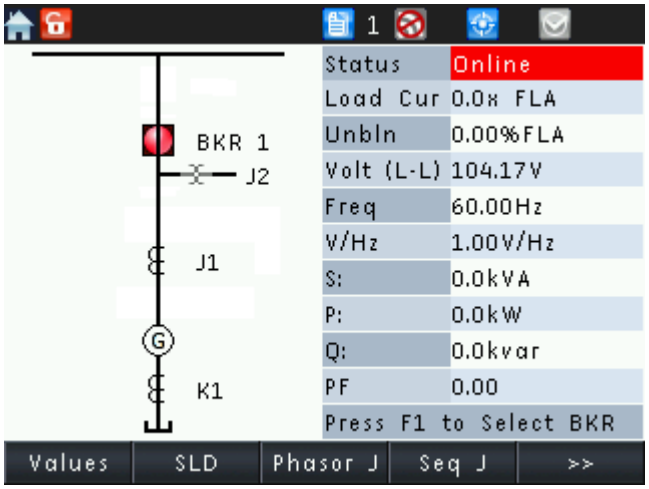

Figure 48: Single Line Diagram example, see order code (3-P1/P5) for slot K

Setpoints > ***Device*** > ***Front Panel*** > ***Default Screen (3-R1/R5)***

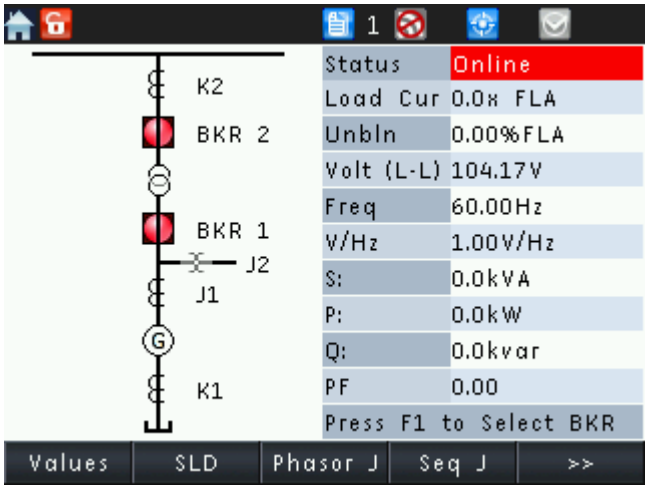

Figure 49: Single Line Diagram example, see order code (3-R1/R5) for slot K

The breaker status icon changes state according to the breaker status input and the color of the icon changes in accordance with the color scheme setting (***Setpoints*** > ***Device*** > ***Front Panel*** > ***Display Properties*** > ***Color Scheme***). The breaker and generator status color is based on the following logic.

	SLD Breaker Symbol Color				Generator Status			
Color Scheme	Open Color	Close Color	Not Configured	Unknown	Offline	Online	Tripped	Unknown
Red (Open)			?	?	Red	Green	Orange	White
Green (Open)			?	?	Green	Red	Orange	White

Note:
The Unknown status has a white background with black text.

When breaker detection Connected/Disconnected (Racked-In/Racked-Out) is configured, the symbols change with respect to the Connected/Disconnected state of the breaker. The following table further illustrates this with an example of the switching device Close state when the color scheme is set to `Green (Open)`.

Connected/Disconnected Detection	Breaker State	Symbol
Not Configured*	Connected*	
Configured	Connected	
Configured	Disconnected	

*8 Series 889 considers the breaker state Connected when detection of the Connected/Disconnected state of the breaker is not configured. Connected/Disconnected detection is not configured when setpoint ***Connected*** (under ***Setpoints*** > ***System*** > ***Breaker***) is set to `Off`.

The parameters displayed in the Front panel screen example are as follows.

Parameter	Input for the value
Load Cur	Metering\ Generator\ General\ Load Current
Unbln	Metering\ Generator\ General\ Unbalance Current
Volt (L-L)	Metering\ Ph VT Bnk1-J2\ J2 V AVG L-L
Freq	Metering\ Frequency 1-J\ J2-3VT Frequency
V/ Hz	Metering\ Volts per Hertz\ Volts Per Hertz 1
S:	Metering\ Power 1\ Pwr1 Apparent
P:	Metering\ Power 1\ Pwr1 Real
Q:	Metering\ Power 1\ Pwr1 Reactive
PF	Metering\ Power 1\Pwr1 PF

3.3.2 THREE-PUSHBUTTON FRONT PANEL LEDS

Note:
The rugged front panel is is not available for all models. See the order codes for details

Front panel LED details:

- Number of LEDs: 17
- Programmability: Any FlexLogic operand
- Reset mode: self-reset or latched

The front panel provides two columns of 7 LED indicators each, and 3 LED pushbutton indicators. The **IN-SERVICE** (LED 1) indicator from the first LED column is a non-programmable LED. LED 3 in the first LED column is programmable and defaulted to **PICKUP**. The bottom 3 LED indicators from the first column, and the 7 LED indicators from the second LED column are fully programmable. The indicators **TRIP** (LED 2), and **ALARM** (LED 3), are also programmable, and can be triggered by either a selection of FlexLogic operand assigned in their own menu, or by the operation of any protection, control or monitoring element with function selected as `Trip`, `Alarm`, or `Latched Alarm`.

The **RESET** key is used to reset any latched LED indicator or Target Message once the condition has been cleared (latched conditions can also be reset via the **RESETTING** menu).

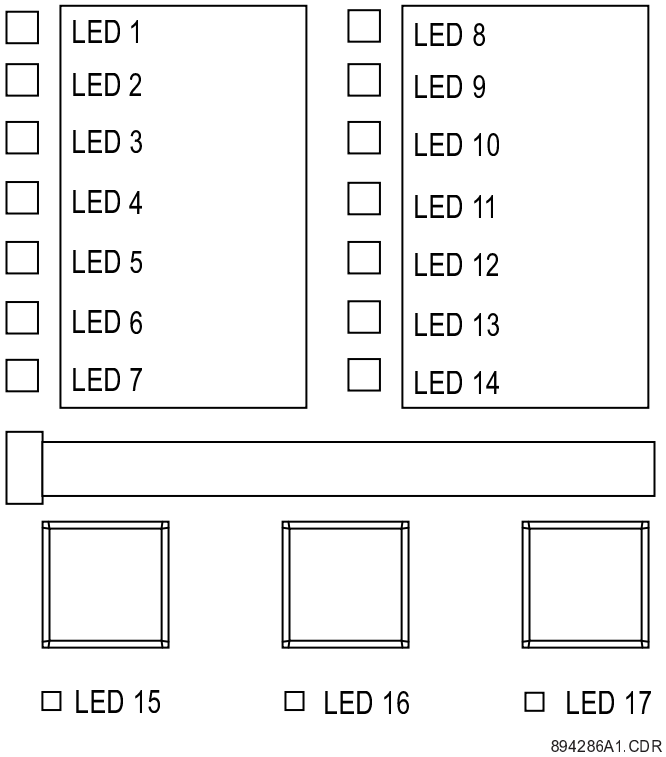

Figure 50: LED numbering

Some status indicators are common while some are feature specific which depend on the availability in the order code. The common status indicators in the first column are described below.

Status Indicator	Description
IN SERVICE	Green color = Relay powered up, passed self-test has been programmed, and ready to serve. This LED indicates that control power is applied, all monitored inputs, outputs, and internal systems are OK, and that the device has been programmed. Red color = Relay failed self test, has not been programmed, or out of service.
TRIP	This LED indicates that the element selected to produce a trip has operated. This indicator always latches; as such, a Reset command must be initiated to allow the latch to be reset.
ALARM	This LED indicates that the FlexLogic™ operand serving as an Alarm switch has operated. Latching of the indicator depends on the selected protection function. A Reset command must be initiated to allow the latch to be reset.
PICKUP	This LED indicates that at least one element is picked up. This indicator is never latched.
TEST MODE	This LED indicates that the relay has been set into Test Mode.
MESSAGE	This LED indicates the presence of Target Messages detected by the relay.
LOCAL MODE	This LED indicates that the relay is operating in local mode.

Breaker status indication is based on the breaker's 52a and 52b contacts. With both contacts wired to the relay and configured, closed breaker status is determined by closed 52a contact and opened 52b contact. Vice-versa the open breaker status is determined by opened 52a contact and closed 52b contact. If both 52a and 52b contacts are open, due to a breaker being racked out from the switchgear, both the Breaker Open and Breaker Closed LED Indicators will be off.

The Event Cause indicators in the first column are described as follows:

Events Cause LEDs are turned `On` or `Off` by protection elements that have their respective target settings selected as either `Self-Reset` or `Latched`. If a protection element target setting has `Self-Reset` selected, then the corresponding Event Cause LEDs remain `On` as long as the operate operand associated with the element remains

asserted. If a protection element target setting is `Latched`, then the corresponding Event Cause LEDs turn `On` when the operate operand associated with the element is asserted and will remain `On` until the **RESET** button on the front panel is pressed after the operand is reset.

Default labels are shipped in the package of every product, together with custom templates. A custom LED template is available for editing and printing. You can download the document GET-20035 from the website. The default labels can be replaced by user-printed labels. Customization of LED operation is of maximum benefit in installations where languages other than English are used to communicate with operators.

3.3.3 HOME SCREEN ICONS

The next figure shows the icons available on the front screen. For descriptions of these screen icons see the following table.

Figure 51: Home Screen Icons

Icon Type	Description of Icon
Security Access	User not logged in - green and locked User logged in - Icon is red and unlocked
Setpoint Group	Identifies the active setpoint group
Wifi	Disabled - gray and crossed by a red line Disconnected - gray Connecting - orange Connected - green
Active Target	When the target auto navigation setting is disabled, the message LED and the Active Target icon are the only indication of active target messages.
Breaker Health	The Breaker Health icon is blue when the setting for the breaker health function is not disabled. When the setting is disabled the icon is gray.
Settings Save	Indicates that a setting is being saved on the relay (i.e., when changing one of relay settings). Icon is ON (relay is saving to flash memory) Icon is OFF (relay is not saving to flash memory)
Local Mode	Indicates that Local Mode is active. During Local Mode, the control for the breakers and disconnect switches can be performed only by the relay front panel.

Note:
The security icon only represents the security access level through the front panel.
Do not remove power from the relay whenever the Settings Save icon is ON. When power is removed the data being saved can also be lost.

3.3.4 RELAY MESSAGES

3.3.4.1 TARGET MESSAGES

Targets are messages displayed on the screen when any change of state of protection, control, monitoring, or digital signal takes place. Depending on the model, targets for each element are enabled, or latched by default. You can disable targets for any particular element if desired.

Target Messages are displayed in order of their activation, whereas in cases of simultaneous activation, they are displayed in the order outlined below (from highest to lowest priority):

1. Targets generated by pressing programmable pushbutton
2. Targets generated by Contact inputs
3. Targets generated by Protection, Control and Monitoring elements
4. Targets generated by communications.

In cases where the Pickup and Operate flags from an element are detected at the same time, the Pickup flag is not displayed. The Operate flag is displayed instead.

LED #6, from the first column of LEDs, is factory configured to be triggered by the FlexLogic operand ANY TARGET, to indicate the presence of at least one target message. This LED is labeled as **MESSAGE**. The LED can be programmed to any other FlexLogic operand by choice.

MESSAGE TIMEOUT

The timeout applies to every screen apart from the default screen. Examples include viewing, metering, or navigating to a screen with setting, etc. If no further navigation is performed, no pushbutton is touched, and/or no target is initiated for the time specified in the message timeout setpoint, the display goes back to the default screen (the metering summary screen).

The target message overrides the message timeout. The message timeout starts timing after each target message, and if no more activity is recorded for the specified time, the display goes back to the default screen.

Pressing a programmable pushbutton activates a new screen with a Target Message corresponding to the programmed pushbutton action. The pushbutton Target Message is displayed for 10 seconds then defaults to the screen that was displayed before pressing the pushbutton. The pushbutton Target Message is recorded in the list with other generated Target Messages.

Target Messages can be cleared either by pressing the pushbutton corresponding to the **CLEAR** tab, or by initiating a **RESET** command. The **CLEAR** command clears only the Target Messages, while initiating a **RESET** clears not only the Target Messages, but also any latched LEDs and output relays.

3.3.4.2 SELF-TEST ERRORS

The relay performs self-diagnostics at initialization (after power up), and continuously as a background task to ensure that the hardware and software are functioning correctly. There are two types of self-test warnings indicating either a minor or major problem. Minor errors indicate a problem with the relay that does not compromise protection and control functionality of the relay. Major errors indicate a problem with the relay which takes it out of service.

Caution:
Self-Test Warnings may indicate a serious problem with the relay hardware!

Upon detection of a minor problem, the relay does the following:

- Displays a detailed description of the error on the relay display as a target message
- Records the minor self-test error in the Event Recorder
- Flashes the **ALARM** LED

Upon detection of a major problem, the relay does the following:

- De-energizes critical failure relay
- De-energizes all output relays
- Blocks protection and control elements
- Turns the **IN SERVICE** LED to red
- Flashes the **ALARM** LED
- Displays **Major Self-test error** with the error code as a target message
- Records the major self-test failure in the Event Recorder

> *Note:*
> *The Critical Failure Relay (Output Relay 8) is energized when the relay is in-service, and no major error is present*

Under both conditions, the targets cannot be cleared if the error is still active.

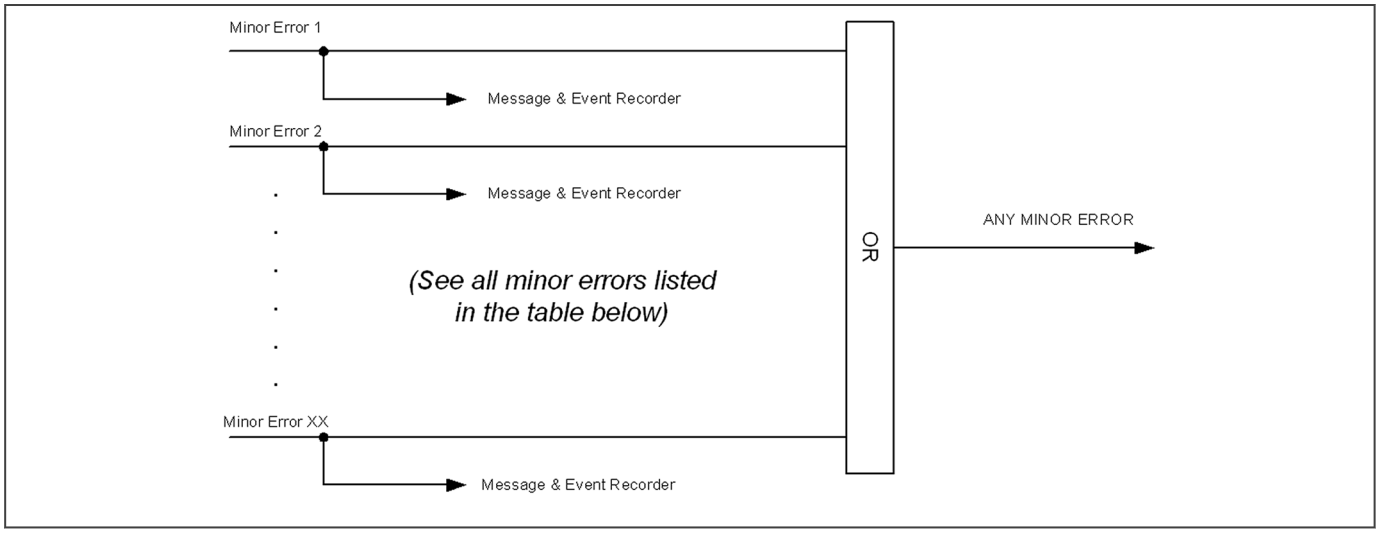

Figure 52: Minor Errors

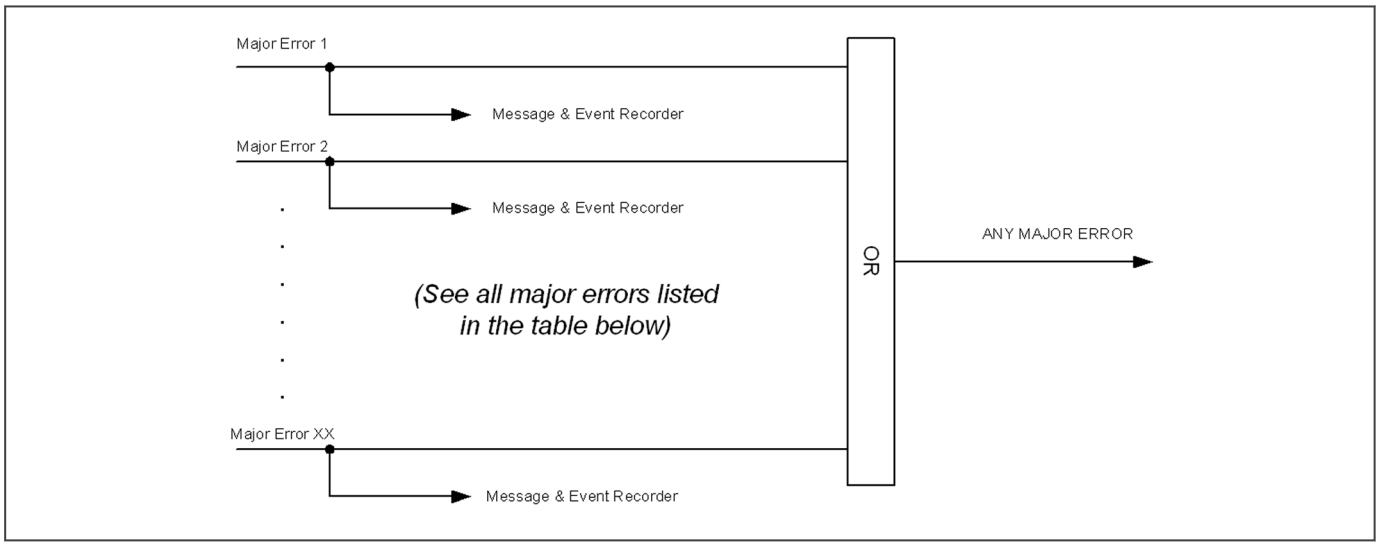

Figure 53: Major Errors

Minor self-test errors

Minor Self-test Error Message[1]	Description of Problem	Frequency of Test	What to Do
Order Code Error	Hardware doesn't match order code	Every 1 second	If alert doesn't self-reset then contact factory. Otherwise monitor re-occurrences as errors are detected and self-reset
CPU S/N Invalid	CPU card doesn't have valid data to match the order code.	Every 1 second	
Slot "$" IO S/N Invalid[2]	IO card located in slot $ doesn't have valid data to match the order code.	Every 1 second	
Comms S/N Invalid	Comms card doesn't have valid data to match the order code.	Every 1 second	
CPanel S/N Invalid	Control Panel doesn't have valid data to match the order code.	Every 1 second	
PSU S/N Invalid	Power Supply Unit doesn't have valid data to match the order code.	Every 1 second	
RTC Error	The CPU cannot read the time from the real time clock	Every 1 second	
Product Serial Invalid	The product serial number doesn't match the product type	Every 1 second	
Comm Alert #1	Communication error between CPU and Comms board	Every 1 second	
Comm Alert #2		Every 1 second	
Comm Alert #3		Every 1 second	
FLASH Error	The permanent storage memory has been corrupted	Every 1 second	
SPI Error	Communication error between CPU and LEDs, Keypad or peripheral memory devices	Every 1 second	
Invalid MAC Address	MAC address is not in the product range	Every 1 second	
Calibration Error	Unit has default calibration values	Boot-up and every 1 second	
Clock Not Set	Clock has the default time	Every 1 second	Set clock to current time
WiFi Default Settings	SSID and Passphrase is the factory default	Every 1 second	Set SSID and Passphrase
Link Error Primary[3]	Port 1 or Port 4 (depending on order code) is not connected	Every 1 second	Ensure Ethernet cable is connected, check cable functionality (i.e. physical damage or perform continuity test), and ensure master or peer device is functioning. If none of these apply, contact the factory.

Minor Self-test Error Message[1]	Description of Problem	Frequency of Test	What to Do
Link Error Secondary	Port 5 is not connected	Every 1 second	Ensure Ethernet cable is connected, check cable functionality (i.e. physical damage or perform continuity test), and ensure master or peer device is functioning. If none of these apply, contact the factory.
Traffic Error Primary	Abnormally high amount of Broadcast and Uni-cast traffic on port 1 or port 4	Every 1 second	Contact site IT department to check network for malfunctioning devices
Traffic Error Secondary	Abnormally high amount of Broadcast and Uni-cast traffic on port 5	Every 1 second	Contact site IT department to check network for malfunctioning devices
Ambient Temperature >80C	The ambient temperature surrounding the product has exceeded 80C	Every 1 second	Inspect mounting enclosure for unexpected heat sources (i.e loose primary cables) and remove accordingly
Event Rate High	Abnormally high amounts of events have been generated so the relay has stopped logging to prevent further issues	Every 1 second	Ensure settings are not set close to nominal ratings. Ensure FlexLogic equations do not have impractical timing for status events
IRIG-B Failure	A bad IRIG-B input signal has been detected	Every 1 second	Ensure IRIG-B cable is connected, check cable functionality (i.e. physical damage or perform continuity test), ensure IRIG-B receiver is functioning, and check input signal level (it may be less than specification). If none of these apply, contact the factory.
CAN_1 Error		Every 1 second	
CAN_2 Error		Every 1 second	
Version Mismatch	CPU and Comms do not have the same revision on firmware	Boot-up and Every 1 second	Ensure that both the CPU and Comms FW was uploaded during the upgrade process
SelfTestFWUpdate	The updating of the firmware failed	Every 1 second	Re-try uploading firmware. If the upload doesn't work a second time contact factory
Remote CAN IO Mismatch	RMIO card detection mismatch	Every 1 second	Check RRTD connections, check if the RRTD configuration is still valid, Validate CANBUS IO.

[1] Failure is logged after the detection of 5 consecutive failures

[2] $ is the slot ID (i.e. F, G, H etc.)

[3a] Link Error Primary can take up to 12 seconds to appear

[3b] To disable Link Error Primary target when not in use with SE order code, change IP address to 127.0.0.1

Major self-test errors

Major Self-test Error Message	Latched Target Message	Description of Problem	Frequency of Test	What to do
Relay Not Ready	No	***PRODUCT SETUP INSTALLATION*** setting indicates relay is not in a programmed state.	On power up and whenever the ***PRODUCT SETUP INSTALLATION*** setting is altered.	Program all required settings and then set the ***PRODUCT SETUP INSTALLATION*** setting to `Ready`.
Major Self-Test (error code)	Yes	Unit hardware failure detected	Every 1 second	Contact the factory and supply the failure code as noted on the display.

Note:
When a total loss of power is present, the Critical Failure Relay (Output Relay 8) is de-energized.

3.3.4.3 OUT OF SERVICE

When the relay is shipped from the factory, ***DEVICE IN SERVICE*** is set to `Not Ready`. The **IN SERVICE** LED will be orange and the critical fail relay will be de-energized but this will not be classified as a major self-test. An out of service event will be generated in the event recorder.

3.3.4.4 FLASH MESSAGES

Flash messages are warning, error, or general information messages displayed in response to pressing certain keys. The factory default flash message time is 2 seconds.

3.3.5 LABEL REMOVAL

For versions up to 3.xx, the front panels are supplied with a label removal tool for removing the LED label and user-programmable pushbutton label.

The following procedures describes how to use the label removal tool.

1. Bend the tabs of the tool upwards as shown in the image.

2. Slide the label removal tool under the LED label as shown in the next image. Make sure the bent tabs are pointing away from the relay. Move the tool inside until the tabs enter the pocket.

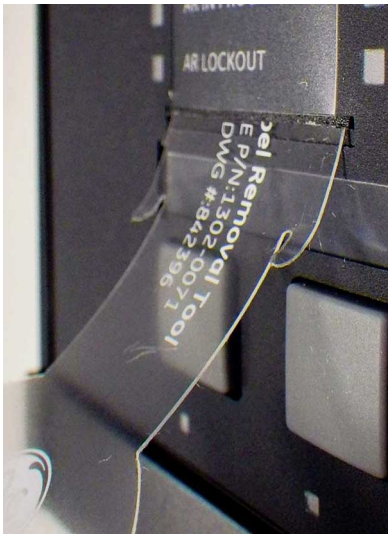

3. Remove the tool with the LED label.

The following describes how to remove the user-programmable pushbutton label from the front panel.

1. Slide the label tool under the user-programmable pushbutton label as shown in the next image. Make sure the bent tab is pointing away from the relay.

Remove the tool and user-programmable pushbutton label as shown in image.

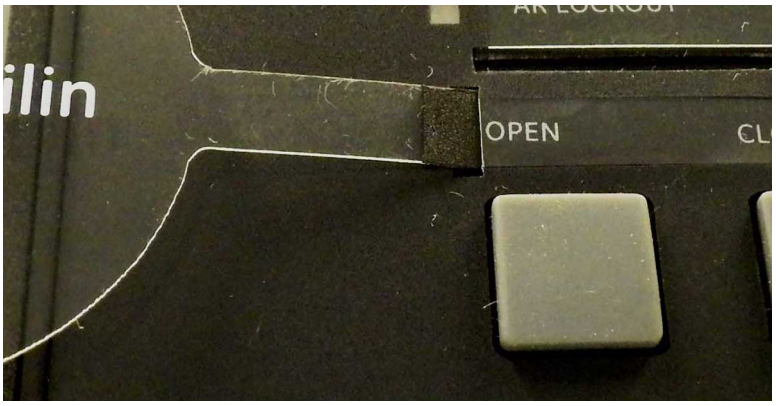

3.4 SOFTWARE INTERFACE

3.4.1 ENERVISTA D&I SETUP SOFTWARE

Although you can enter settings manually using the control panel keys, you can also use a PC to download setpoints through the communications port. EnerVista D&I Setup software is used to make this as convenient as possible. With EnerVista D&I Setup software, it is possible to:

- Program and modify settings
- Load setting files from a computer
- Save setting files to a computer
- Read actual values
- Monitor status
- Read pre-trip data and event records
- Get help on any topic
- Upgrade the firmware

The software allows immediate access to all features with easy to use pull down menus in the familiar Windows environment. This section provides the necessary information to install the software, upgrade the relay firmware, and write and edit setting files.

The software can run without a relay connected to the computer. In this case, settings may be saved to a file for future use. If a relay is connected to a PC and communications are enabled, you can configure the relay from the setting screens. In addition, measured values, status and trip messages can be displayed with the actual value screens.

3.4.1.1 HARDWARE & SOFTWARE REQUIREMENTS

EnerVista D&I Setup software has the following system requirements:

- Dual-core processor
- Microsoft Windows 10 or higher; 32-bit or 64-bit.
- At least 1 GB of free hard disk space is available.
- At least 2 GB of RAM is installed.
- 1280 x 800 display screen

The EnerVista D&I Setup software can be installed from the GE Multilin website.

3.4.1.2 INSTALLING ENERVISTA D&I SETUP SOFTWARE

Use the following procedure to install EnerVista D&I Setup software using the EnerVista D&I Setup software Launchpad application (found on the GE Multilin website).

1. Double-click the installation package and follow the instructions to install the software on the local PC.
2. When the installation is complete, start the EnerVista D&I Setup software Launchpad application.
3. Click the **IED Setup** section of the LaunchPad toolbar.
4. In the EnerVista D&I Setup software Launchpad window, click the **Add Product** button and select the required Protection System. Select the Web option to ensure the most recent software release.
5. Click the **Add Now** button to list software items. EnerVista D&I Setup software Launchpad obtains the latest installation software from the Web and automatically starts the installation process. A status window with a progress bar is shown during the downloading process.

6. Select the complete path, including the new directory name, where the software is to be installed.
7. Click on **Next** to begin the installation. The files are installed in the directory indicated, the USB driver is loaded into the computer, and the installation program automatically creates icons and adds the EnerVista D&I Setup software to the Windows start menu.
8. The required device is added to the list of installed IEDs in the EnerVista D&I Setup software Launchpad IED Setup window.

If you are going to communicate from your computer to the relay using the USB port:

1. Connect the USB cable from your computer to the relay's USB port.
2. Launch EnerVista D&I Setup software from the LaunchPad. Then in **EnerVista D&I Setup software 8 Series setup software > Device Setup**, select **USB** as the Interface type.
3. Select the **Read Order Code** button.

3.4.1.3 UPGRADING ENERVISTA D&I SETUP SOFTWARE

The latest software can be downloaded from the GE website.

After upgrading, check the version number under ***Help*** > ***About***. If the new version does not display, try uninstalling the software and reinstalling the new version.

3.4.2 CONNECTING ENERVISTA D&I SETUP SOFTWARE TO THE RELAY

3.4.2.1 USING THE QUICK CONNECT FEATURE

The **Quick Connect** button can be used to establish a fast connection through the front panel USB port of a relay.

Select **USB** and press the **Connect** button. Alternatively, Ethernet or WiFi (not all models) can be used as the interface.

When connected, a new site called **Quick Connect** appears in the **Site List** window.

The Site Device has now been configured via the Quick Connect feature for communications through whichever interface has been chosen.

3.4.2.2 CONFIGURING ETHERNET COMMUNICATIONS

Before starting, verify that the Ethernet cable is properly connected to the relevant Ethernet port.

> *Note:*
> *The relay supports a maximum of 3 TCP/IP sessions.*

1. Install and start the latest version of the software (available from the GE Multilin Website). See the previous section for the installation procedure.
2. Click on the **Device Setup** button to open the Device Setup window and click the **Add Site** button to define a new site.
3. Enter the desired site name in the Site Name field. If desired, a short description of the site can also be entered. In this example, we will use Substation 1 as the site name.
4. The new site appears in the upper-left list.
5. Click the **Add Device** button to define the new device.
6. Enter the desired name in the Device Name field, and a description (optional).
7. Select Ethernet from the Interface drop-down list. This displays a number of interface parameters that must be entered for proper Ethernet functionality.

8. Enter the IP address, slave address, and Modbus port values assigned to the relay (from the **Setpoints > Device > Communications** menu).
9. Click the **Read Order Code** button to connect to the relay and upload the order code. If a communications error occurs, ensure that the Ethernet communication values correspond to the relay setting values.
10. Click **OK** when the relay order code has been received. The new device will be added to the Site List window (or Online window) located in the top left corner of the main EnerVista D&I Setup software window.

The Site Device has now been configured for Ethernet communications.

3.4.2.3 CONNECTING TO THE RELAY

Now that the communications parameters have been properly configured, communications with the relay can be initiated.

1. Expand the Site list by double clicking on the site name or clicking on the **+** box to list the available devices for the given site.
2. The required device trees can be expanded by clicking the **+** box. The following list of headers is shown for each device:
   - Device Definition
   - Status
   - Metering
   - Quick Setup
   - Setpoints
   - Records
   - Maintenance
3. Expand the **Setpoints > Device > Front Panel** list item and double click on **Display Properties** or **Default Screens** to open the settings window.
4. The settings window opens with a corresponding status indicator on the lower left of the EnerVista D&I Setup software window.
5. If the status indicator is red, verify that the serial, USB, or Ethernet cable is properly connected to the relay, and that the relay has been properly configured for communications (steps described earlier).

The settings can now be edited, printed, or changed. Other setpoint and command windows can be displayed and edited in a similar manner. **Actual Values** windows are also available for display. These windows can be arranged and resized, if necessary.

3.4.2.4 CONFIGURING USB ADDRESS

By default, the relay USB port uses the network address 172.16.0.2. In some cases this IP is part of the corporate network for the computer and conflicts with existing computers or other devices on that network. To resolve this conflict, change the USB address to be in a different network. This change must be made to the computer settings,

the relay settings, and the EnerVista D&I Setup software settings in order to connect to the relay through the USB port.

1. Open the Windows Control Panel and select **Network and Internet > Network Sharing**. The exact path may vary depending on the version of Windows.

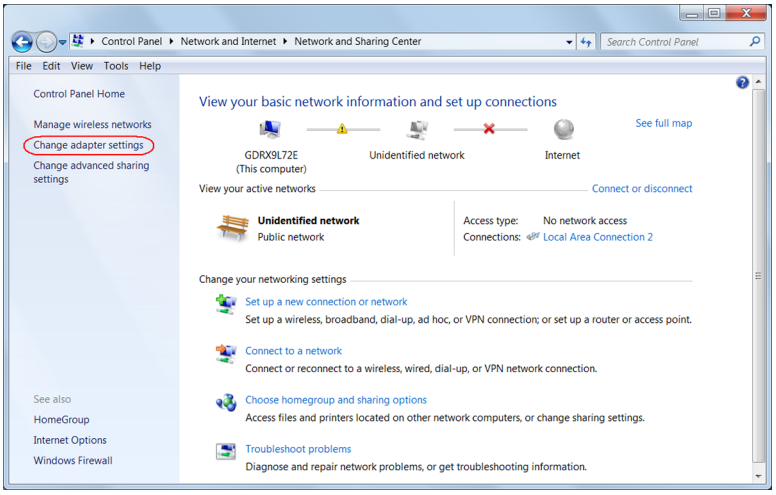

2. Click **Change adapter settings**.

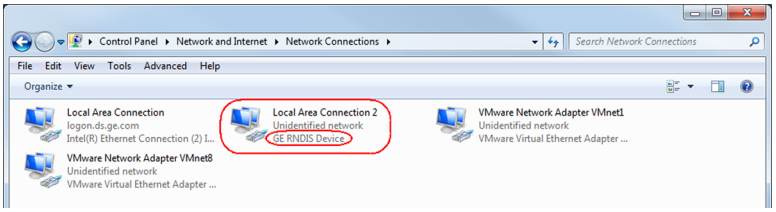

3. Find the **GE RNDIS Device** (or **GE RNDIS Device #2**) and right-click the network it is on to open the **Properties** window.
4. Select **Internet Protocol Version 4 (TCP/IPv4)** and click **Properties**.

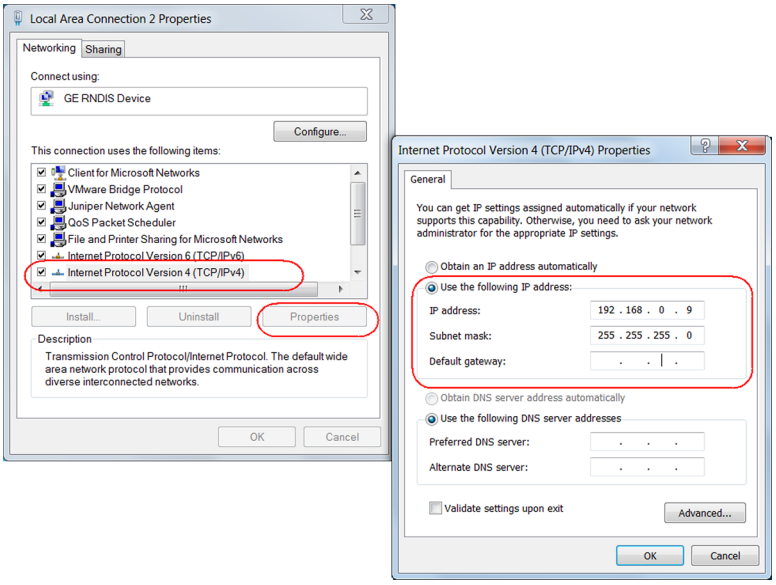

5. In the Internet Protocol Version 4 (TCP/IPv4) Properties window, ensure that **Use the following IP Address** is selected, and enter an appropriate IP address.
6. Click **OK** to save the new settings.

7. In the EnerVista D&I Setup software, navigate to **File > Preferences > USB** and change the IP address to match. This address will now be used by EnerVista D&I Setup software when the interface selected is USB.

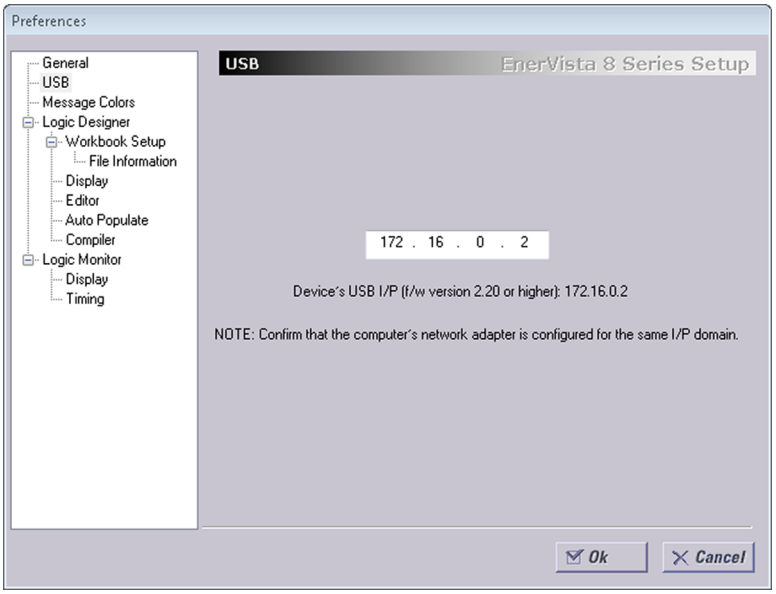

8. Click **OK** to save the new settings.
9. On the front panel of the relay, navigate to **Setpoint > Device > Communications > USB**.
10. Change both the **USB IP Address** and **USB GWY IP Address** setpoints to match the IP address the computer is now using.

The relay should now communicate with the computer through the USB port.

3.4.3 WORKING WITH SETPOINTS

When a settings file is being uploaded to a device, the ***DEVICE IN SERVICE*** setting switches to `Not Ready` for the duration of the upload. This ensures that all new settings are applied before the device is operational. A settings file uploads operations including the following:

- EnerVista D&I Setup software menu option **Write Settings File to Device**
- Logic Designer changes saved online
- SLD configuration saved online
- IEC 61850 configuration saved online
- FlexLogic configuration saved online
- CID file uploaded to device

Individual setting changes from the device front panel or the EnerVista D&I Setup software Online Window do not change the state of the ***DEVICE IN SERVICE*** setting.

3.4.3.1 ENTERING SETPOINTS

The following **System Setup** page is used as an example to illustrate entering setpoints. In this example, we will changing the voltage sensing setpoints.

1. Establish communications with the relay.
2. Select the ***Setpoint*** > ***System*** > ***Voltage Sensing*** menu item.

3. Select the Aux. VT Secondary setpoint by clicking anywhere in the parameter box. This displays three arrows: two to increment/decrement the value and another to launch the numerical keypad.

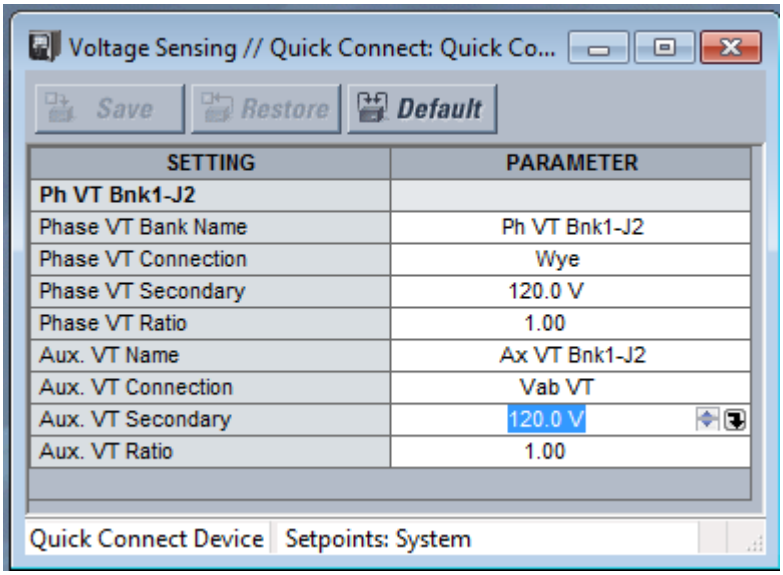

4. Clicking the arrow at the end of the box displays a numerical keypad interface used to enter values within the setpoint range displayed near the top of the keypad: Click **=** to exit from the keypad and keep the new value. Click on **X** to exit from the keypad and retain the old value.

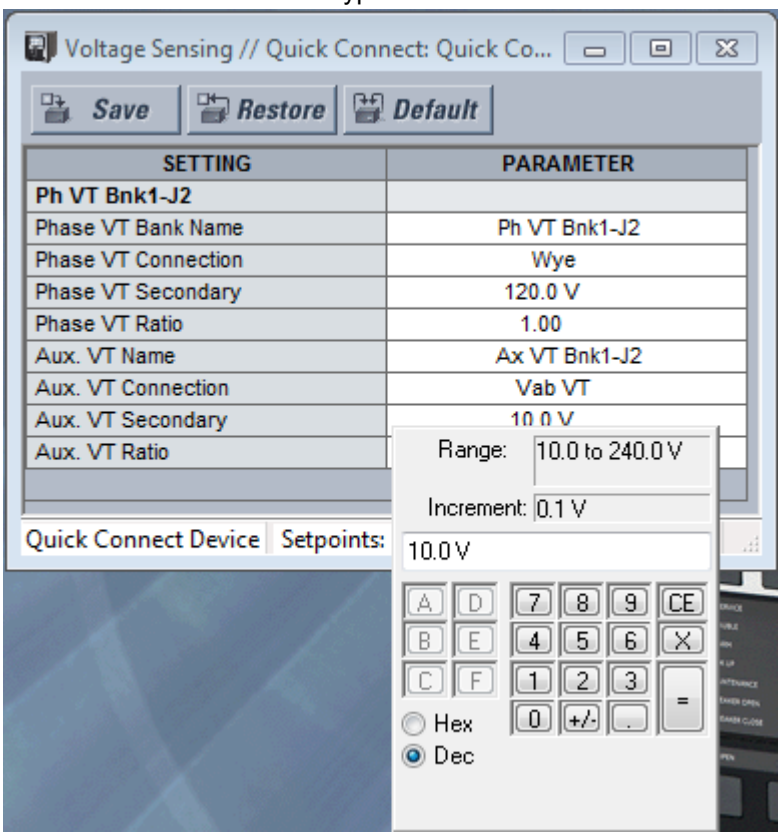

5. For setpoints requiring non-numerical pre-set values (e.g. ***Phase VT Connection*** below), clicking anywhere within the setpoint value box displays a drop-down selection menu arrow. Select the desired value from this list.

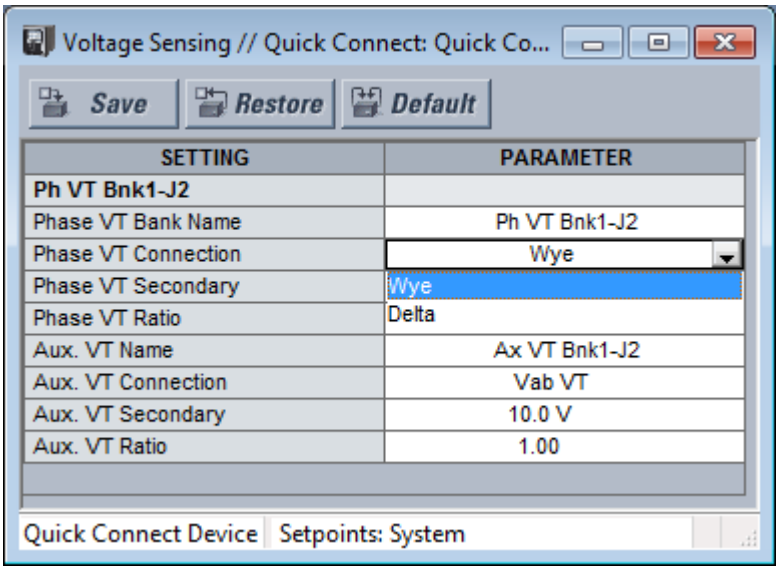

6. In the ***Setpoints*** > ***System Setup*** > ***Voltage Sensing*** dialog box, click on **Save** to save the values into the relay. Click **YES** to accept any changes and exit the window. Click **Restore** to retain previous values. Click **Default** to restore Default values.
7. For setpoints requiring an alphanumeric text string (e.g. relay name), the value may be entered directly within the setpoint value box.

> *Note:*
> *When using Setpoint Groups, an element from one group can be dragged and dropped on the same element in another group, copying all settings.*

3.4.3.2 USING SETPOINT FILES

The EnerVista D&I Setup software interface supports three ways of handling changes to relay settings:

1. In off-line mode (relay disconnected) to create or edit relay settings files for later download to communicating relays.
2. Directly modifying relay settings while connected to a communicating relay, then saving the settings when complete.
3. Creating/editing settings files while connected to a communicating relay, then saving them to the relay when complete.

Setting files are organized on the basis of file names assigned by the user. A setting file contains data pertaining to the following types of relay settings:

- Device Definition
- Relay Setup
- System Setup
- Protection
- Control
- Inputs/Outputs
- Monitoring
- FlexLogic
- Quick setup

- Protection summary
- IEC 61850 configurator
- Modbus user map

Factory default values are supplied and can be restored after any changes.

The relay displays relay setpoints with the same hierarchy as the front panel display.

3.4.3.3 DOWNLOADING AND SAVING SETPOINT FILES

You should make a backup of the in-service settings before any changes are made or any work undertaken on commissioned devices. This section describes how to backup settings to a file and how to use that file to restore settings to the original relay or to a replacement relay.

Setpoints must be saved to a file on the local PC before performing any firmware upgrades. Saving setpoints is also highly recommended before making any setpoint changes or creating new setpoint files.

The setpoint files in the EnerVista D&I Setup software window are accessed in the **Files** Window. Use the following procedure to download and save setpoint files to a local PC.

1. Ensure that the site and corresponding device(s) have been properly defined and configured.
2. Select the desired device from the site list.
3. Select **Read Device Settings** from the online menu item, or right-click on the device and select **Read Device Settings** to obtain settings information from the device.
4. After a few seconds, the software requests the name and destination path of the setpoint file. The corresponding file extension is automatically assigned. Press **Receive** to complete the process. A new entry is added to the tree, in the **File** pane, showing path and file name for the setpoint file.

3.4.3.4 ADDING SETPOINT FILES TO THE ENVIRONMENT

EnerVista D&I Setup software allows you to review and manage a large group of setpoint files. Use the following procedure to add an existing file to the list.

1. In the offline pane, right-click on **Files** and select the **Add Existing Settings File** item.
2. The **Open** dialog box is displayed, prompting to select a previously saved setpoint file.
3. Browse for the file to be added then click **Open**. The new file and complete path will be added to the file list.

3.4.3.5 CREATING A NEW SETPOINTS FILE

Eenrvista allows you to create a new setpoint files independent of a connected device. These can be uploaded to a relay at a later date. The following procedure illustrates how to create new setpoint files.

1. In the Offline pane, right click and select the **New Settings File** item. The **Create New Settings File** box appears, allowing for the configuration of the setpoint file for the correct firmware version. It is important to define the correct firmware version to ensure that setpoints not available in a particular version are not downloaded into the relay.
2. Select the Firmware Version, and Order Code options for the new setpoint file.
3. For future reference, enter some useful information in the **Description** box to facilitate the identification of the device and the purpose of the file.

4. To select a file name and path for the new file, click the button beside the **File Name** box.
5. Select the file name and path to store the file, or select any displayed file name to replace an existing file. All setpoint files should have the extension `.CID`.
6. Click **OK** to complete the process. Once this step is completed, the new file, with a complete path, is added to the software environment.

> *Note:*
> *Offline settings files can be created for invalid order codes in order to support file conversion from different products, upgrades, and special orders. To validate an order code, visit the GE Multilin online store.*
> *Filenames for setting files cannot have a period character (.) other than the one that is added in front of CID.*

3.4.3.6 UPGRADING SETPOINT FILES TO A NEW REVISION

It is often necessary to upgrade the revision for a previously saved setpoint file after the firmware has been upgraded. This is illustrated in the following procedure:

1. Establish communications with the relay.
2. Select the ***Status*** > ***Information*** > ***Main CPU*** menu item and record the Firmware Version.
3. Load the setpoint file to be upgraded into the EnerVista D&I Setup software 8 Series setup software environment.
4. In the File pane, select the saved setpoint file.
5. From the main window menu bar, select the ***Offline*** > ***Edit Settings File Properties*** menu item and note the File Version of the setpoint file. If this version is different from the Firmware Revision noted in step 2, select a New File Version that matches the Firmware Revision from the pull-down menu. For example, if the firmware revision is J0J08AA150.SFD (Firmware Revision 1.50) and the current setpoint file revision is 1.10, change the New File Version to 1.5x.
6. Enter any special comments about the setpoint file in the **Description** field.
7. Select the desired firmware version from the **New File Version** field.
8. When complete, click **OK** to convert the setpoint file to the desired revision.

3.4.3.7 PRINTING SETPOINTS

EnerVista D&I Setup software allows you to print partial or complete lists of setpoints. Use the following procedure to print a list of setpoints:

1. Select a previously saved setpoints file in the File pane or establish communications with a relay.
2. If printing from an online device, select the ***Online*** > ***Print Device Information*** menu item. If printing from a previously saved setpoints file, select the ***Offline*** > ***Print Settings File*** menu item.
3. The Print/Export Options dialog box appears. Select **Setpoints** in the upper section and select either **Include All Features** (for a complete list) or **Include Only Enabled Features** (for a list of only those features which are currently used) in the filtering section and click **OK**.
4. Setpoint lists can be printed in the same manner by right clicking on the desired file (in the file list) or device (in the device list) and selecting the **Print Device Information** or **Print Settings File** options.

3.4.3.8 PRINTING VALUES FROM A CONNECTED DEVICE

A complete list of actual values can also be printed from a connected device with the following procedure:

1. Establish communications with the desired relay.
2. From the main window, select the ***Online*** > ***Print Device Information*** menu item
3. The Print/Export Options dialog box will appear. Select **Actual Values** in the upper section and select either **Include All Features** (for a complete list) or **Include Only Enabled Features** (for a list of only those features which are currently used) in the filtering section and click **OK**.

Actual values lists can be printed in the same manner by right clicking on the desired device (in the device list) and selecting the **Print Device Information** option.

3.4.3.9 LOADING SETPOINTS FROM A FILE

> *Note:*
> *An error message occurs when attempting to upload a setpoint file with a revision number that does not match the relay firmware.*

The following procedure illustrates how to load setpoints from a file. Before loading a setpoints file, it must first be added to the software environment.

1. Select the previously saved setpoints file from the File pane of the main window.
2. Select the ***Offline*** > ***Edit Settings File Properties*** menu item and verify that the corresponding file is fully compatible with the hardware and firmware version of the target relay.
3. Right-click on the selected file and select the **Write Settings File to Device** item.
4. Select the target relay from the list of devices shown and click **Send**. If there is an incompatibility, an Incompatible device order codes, versions or Serial Locks error will occur.

If there are no incompatibilities between the target device and the settings file, the data is transferred to the relay. An indication of the percentage completed is shown in the bottom of the main window.

3.4.3.10 UNINSTALLING FILES AND CLEARING DATA

The relay can be decommissioned by turning off the power to the unit and disconnecting the wires to it. Files can be cleared after uninstalling Emervista or the relay, for example to comply with data security regulations. On the computer, settings files can be identified by the `.CID` extension.

To clear the current settings file do the following:

1. Create a default settings file.
2. Write the default settings file to the relay.
3. Delete all other files with the `.CID` extension.
4. Delete any other data files, which can be in standard formats, such as `COMTRADE` or `.csv`.

You cannot directly erase the flash memory, but all records and settings in that memory can be deleted. Do this from the front panel or EnerVista D&I Setup software using: ***Command > Clear All Records***

3.4.4 QUICK SETUP

The **Quick Setup** item can be accessed online or offline in EnerVista D&I Setup software. Settings changes can be made from both of these screens.

Quick Setup is designed for quick and easy user programming. Power system parameters, and settings for some simple overcurrent elements are easily set. The **Quick Setup** screen works as follows:

- Settings names and units can be viewed at this screen. To view the range of the settings, hover the cursor over the setpoint value field.
- Configure and save the settings as required.
- The **Save**, **Restore** and **Default** buttons function the same as in the individual setting setup screens.
- If you enter a setting value which exceeds the range, when you attempt to save it a warning dialog box will appear. You must correct the setting value to ensure that it is within the permissible range and save it to proceed.

3.4.5 UPGRADING RELAY FIRMWARE

To upgrade the firmware, follow the procedures listed in this section. Upon successful completion of this procedure, the relay will have new firmware installed with the factory default setpoints.The latest firmware files are available from the GE website.

> *Note:*
> *EnerVista D&I Setup software prevents incompatible firmware from being loaded into a relay.*
> *Uploading firmware on a WiFi interface is not allowed.*
> *Before upgrading firmware, it is very important to save the current settings to a file on your PC. After the firmware has been upgraded, it will be necessary to load this file back into the relay.*

3.4.5.1 LOADING NEW RELAY FIRMWARE

Do the following to load new firmware into the relay's flash memory.

1. Connect the relay to the local PC and save the setpoints to a file.
2. Select the ***Maintenance*** > ***Update Firmware*** menu item. A screen appears with information on how long the upload will take. Select **OK** to proceed.
3. EnerVista D&I Setup software requests the new firmware file. Locate the folder that contains the firmware file to load into the relay.The firmware filename has the following format.

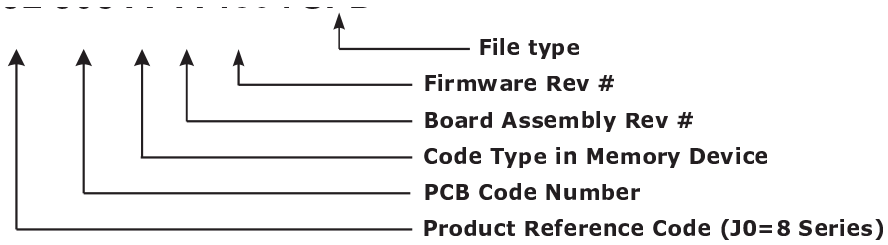

   A screen appears advising that a backup of the settings file should be made before proceeding with the firmware upgrade. Select **YES** to proceed.
4. EnerVista D&I Setup software now prepares the relay to receive the new firmware file. The front panel momentarily displays `Upload Mode`.
5. A screen appears confirming the firmware versions of the target device and the selected `.SFD`. Click **YES** to proceed with the firmware loading process.
6. EnerVista D&I Setup software will prompt the user to reboot the relay after both the Boot 1 and Boot 2 uploads.

> *Note:*
> *The relay should be rebooted BEFORE pressing **OK**.*

7. Wait for the Comms upload process to complete.
8. Wait for the Mains upload process to complete.
9. EnerVista D&I Setup software notifies you when the relay is successfully updated.

> *Note:*
> *Wait for the relay to boot up, then cycle power to the relay to complete the firmware update process.*

After successfully updating the firmware, the relay is not in service and requires setpoint programming. To communicate with the relay, the communication settings may have to be manually reprogrammed.

When communication is established, you must reload the saved setpoints back into the relay.

Modbus addresses assigned to features, settings, and corresponding data items (i.e. default values, min/max values, data type, and item size) may change slightly from version to version of firmware. The addresses are rearranged when new features are added or existing features are enhanced or modified.

3.4.6 SLD CONFIGURATOR

The SLD Configurator allows users to create customized single line diagrams (SLD) for the front panel display. The SLDs must be configured from the SLD Configurator in the EnerVista D&I Setup software, located under ***Setpoints*** > ***SLD Configurator***. The SLD Configurator allows breakers, switches, metering, and status items on the SLD.

SLDs are viewed from the relay front panel and individual SLD pages can be selected for the default home screen pages. The relay provides several SLD pages. Each page can have a combination of active and passive objects. Status, metering, and control objects are active while the static images for bus, generator, motor, transformer, ground, etc. are passive objects.

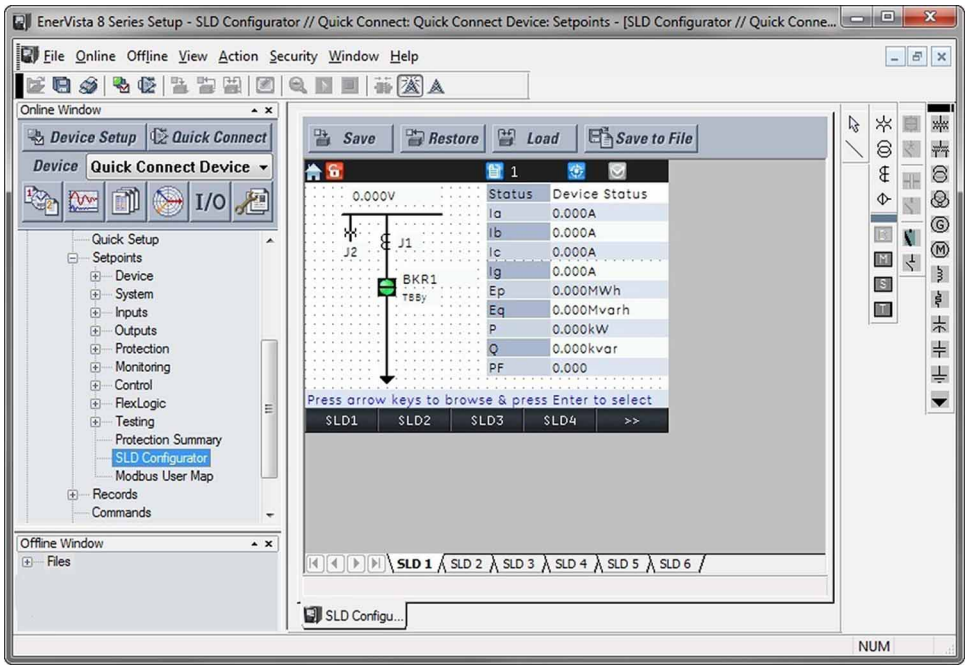

Figure 54: SLD Page

For optimum use, the first SLD page can be used for the overall SLD and the subsequent pages can be used for breaker/switch specific CT/VT placement, metering and status. Once the configurable SLDs are programmed, they are saved within the relay settings file. The SLD pages can also be saved individually as local XML files. The locally stored XML files can then be reloaded to generate another diagram. SLDs represent objects using GE symbols (similar to ANSI).

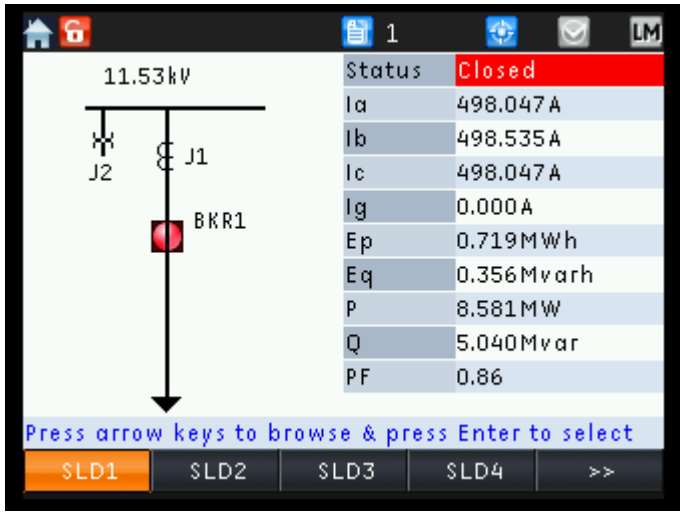

Figure 55: Template SLD

The following figure shows the objects that are available for design in the SLD Configurator and their maximum usage limits [X]. The maximum limit reflects the maximum possible order code.

Column1	Column2	Column3	Column4
Select	VT (GE) [12]	Breaker (GE) [1]	Transformer 2W (GE) [2]
Line [50]	VT (IEC) [12]	Breaker (IEC) [1]	Transformer 3W (GE) [2]
Separator	CT (GE) [12]	Separator	Transformer 2W (IEC) [2]
	CT (IEC) [12]		Transformer 3W (IEC) [2]
	Separator		Generator [2]
	Device Status [1]	Separator	Motor [2]
	Metering Object [15]	Disconnect Switch (GE) [9]	Reactor (for grounding) [5]
	Status Object [15]	Disconnect Switch (IEC) [9]	Resistor (for grounding) [5]
	Text Object [20]	Separator	Capacitor (polarity) [5]
	Remote Breaker (GE) [3] Remote Breaker (IEC) [3]		Capacitor (non-polarity) [5]
	Separator		Ground [10]
			Load [5]
			Separator

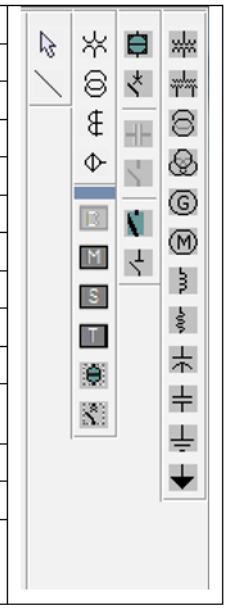

Figure 56: SLD Configurator Component Library

3.4.6.1 CONTROL OBJECTS

The control objects consist of selectable breakers and disconnect switches. The following figure shows the different symbols in the GE Standard style and IEC style. If the switching element is tagged, blocked, or bypassed, indicators with the letters **T**, **B**, and **By** appear on the lower right corner of the element. The breaker/switch name is displayed at the top of the object.

> *Note:*
> *The displayed breaker name is configured in the setpoint **Setpoints** > **System** > **Breakers** > **Breaker[X]** > **Name**. This setpoint has a 13-character limit. The name should be kept to a minimum so that it appears properly on the SLD.*

Component		Symbols	
		GE	IEC
Breaker	BKR Open		
	BKR Closed		
	BKR Bad Status		
	BKR Tagged (**T**) /Blocked (**B**) /Bypassed (**By**)	BKR1 TBBy	BKR1 TBBy
Breaker (Truck)	BKR Racked Out & Open		
	BKR Racked Out & Closed		
	BKR Racked Out & Bad Status		
	BKR Racked In & Open		
	BKR Racked In & Closed		
	BKR Racked In & Bad Status		
Contactor	Contactor Open		
	Contactor Closed		
	Contactor Unknown Status		
Disconnect Switch	SW Open		
	SW Closed		
	SW Unknown Status		
	SW Intermediate		
	SW Tagged (**T**) /Blocked (**B**) /Bypassed (**By**)	SW1 TBBy	SW1 TBBy

Figure 57: Control Object Symbols

> *Note:*
> *GE symbols are color-coded ANSI symbols.*

The control objects status follows the color scheme from the ***Setpoints*** > ***Device*** > ***Front Panel*** > ***Display Properties*** > ***Color Scheme*** setting. By default, this setting is set to `Green (open)`. If set to `Red (open)`, the status colors are reversed.

If the setting is used, the breaker symbols automatically change to the Truck CB symbols. The SLD assumes that if the Breaker Racked-In/Racked-Out input is used (anything other than `Off`), the appropriate Truck CB symbol will be used.

The following figure shows the orientation available for the control objects. The default position for the control objects is 0 degrees. Orientation in multiple directions allows for configuration of the single line diagram according to the existing drawings and ensure the correct side for the fixed/moving contacts.

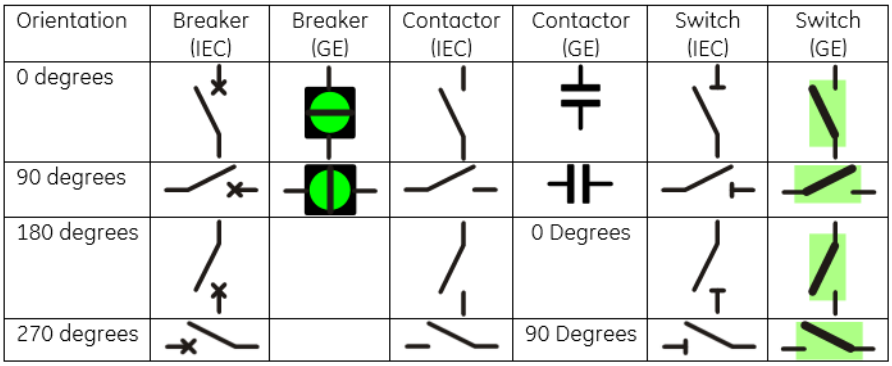

Figure 58: Orientation for Breakers and Switches

3.4.6.2 STATUS OBJECTS

The status objects consist of digital operands. Up to 15 digital status elements can be configured per SLD page. The status object acts as an LED on the screen. If the diagram shows a gray circle, it means the assigned input is low. If it shows a red circle, the assigned input is high. The following figure shows an example of the Reclose Blocked signal in both On and Off state.

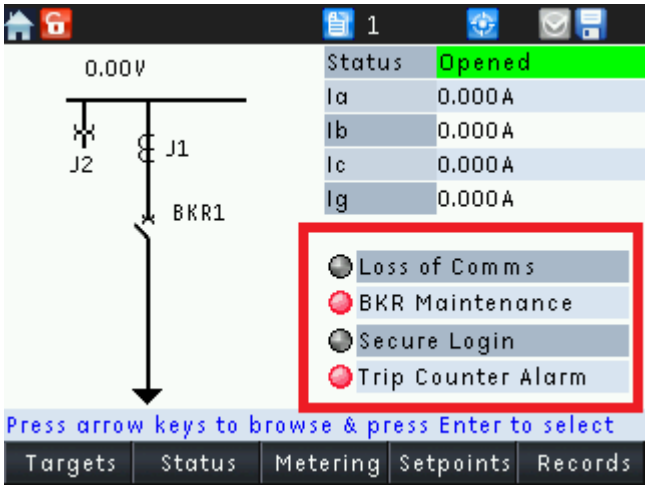

Figure 59: Reclose Blocked signal

In addition, Remote Breaker status objects are added for GE and IEC style. Remote breaker status allows monitoring of three distant breakers. These objects are not controllable and hence cannot be used for selection and operation.

3.4.6.3 METERING OBJECTS

The metering objects consist of metering elements. Up to 15 metering elements can be configured per SLD page. The metering object has an input for all the available FlexAnalog values. The units for these values are dynamically scaled as per the defaults. The following figure shows the metering element on a configured SLD.

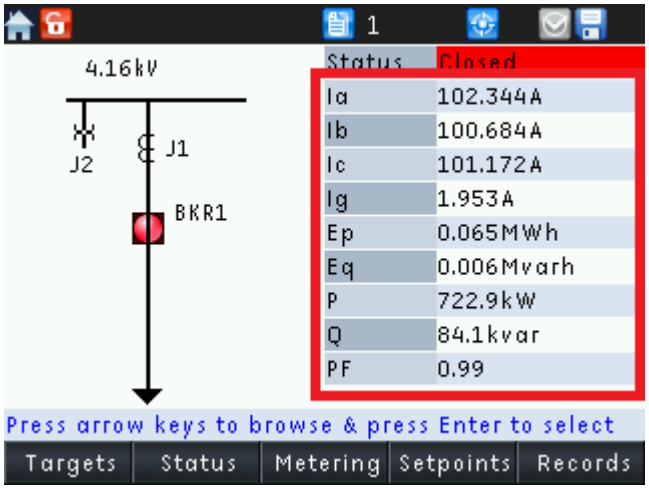

Figure 60: Metering Element on configured SLD

3.4.6.4 DEVICE STATUS OBJECT

The configurable SLD feature in the relay allows only one device status object per SLD page. The device status does not have any properties. It is simply shown as **Status: [device status]**.

3.4.6.5 STATIC OBJECTS

Static objects are used as simple bitmap images or text/drawing blocks to complete the single line diagram. There is no control associated with these static objects. The static objects consist of drawing tools, text object, and power system components.

3.4.6.6 FRONT PANEL INTERACTION

8 Series relays use the Select-Before-Operate (SBO) mechanism for local control of breakers and switches [IEC 61850-7-2]. Initially, the diagram can be browsed through all available breakers and switches by using the navigation keys. After navigation, selection must be made for the breaker or switch object by pressing the **Enter** key. After selecting the desired switch or breaker, control operations can then be carried out on the selected switch or breaker. The relay allows local opening, closing, tagging, blocking, and bypassing. Front panel control is only allowed when the relay is in Local Mode.

3.4.6.6.1 NAVIGATION

The SLD can be accessed in two ways from the front panel of the relay. The original location for the SLD pages is under ***Status > Summary > SLD (Single Line Diagram) [x]***. However, a more convenient way to access an SLD page is by setting it as a default home screen at ***Setpoints*** > ***Device*** > ***Front Panel*** > ***Home Screens*** > ***Home Screen1***. Pressing the home button more than once rotates through the configured home screens. If the desired SLD is set to ***Home Screen 2*** through ***Home Screen 10***, it can be activated by pressing home button until it appears on the screen. If no home screen is configured, the default screens become active. If the default screens are disabled, ***Status*** > ***Summary*** > ***Values*** screen is shown.

3.4.6.6.2 BREAKER/SWITCH BROWSING AND SELECTION

While in the SLD screen, only one page is active at any point of time. If SLD1 is active, only breakers and switches on SLD1 can be operated and controlled. By default, when entering the SLD menu, the screen displays SLD1. SLD2 through SLD6 can be accessed through the navigation pushbuttons as shown in the **Active element selection with flash message** figure, found later in this section.

To browse through the control elements on the SLD page, the navigation keys can be used. On the rugged front panel, the up and down keys can be pressed for navigation and on the membrane front panel, up, down, left, and right keys can be pressed. With the rugged front panel navigation, pressing down sequentially rotates through all

the available breakers and switches on the screen. Pressing the up key rotates through in a reverse order. With the membrane front panel, the up, down, left, and right keys can navigate to the closest breaker/switch depending on the key press direction.

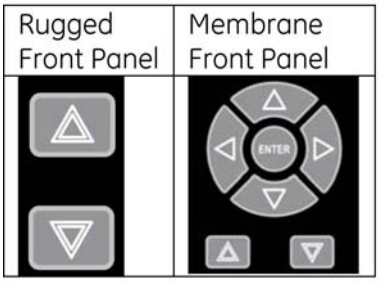

Figure 61: Navigation keys

While browsing through switches/breakers the active element is shown with a blue colored border around it. To select a breaker/switch, the browsing indicator border must be around the desired breaker or switch. The breaker or switch can then be selected by pressing the **Enter** key. As the breaker or switch is being selected, a flash message appears indicating that the breaker or switch has been selected as shown in the following figure. Once the element is selected for operation, the SLD control pushbuttons appear and the color of the highlighter will change to maroon indicating that the breaker or switch is selected. By default, the control pushbuttons are programmed for **Tag**, **Block**, and **Bypass**. For each control action, a flash message is displayed.

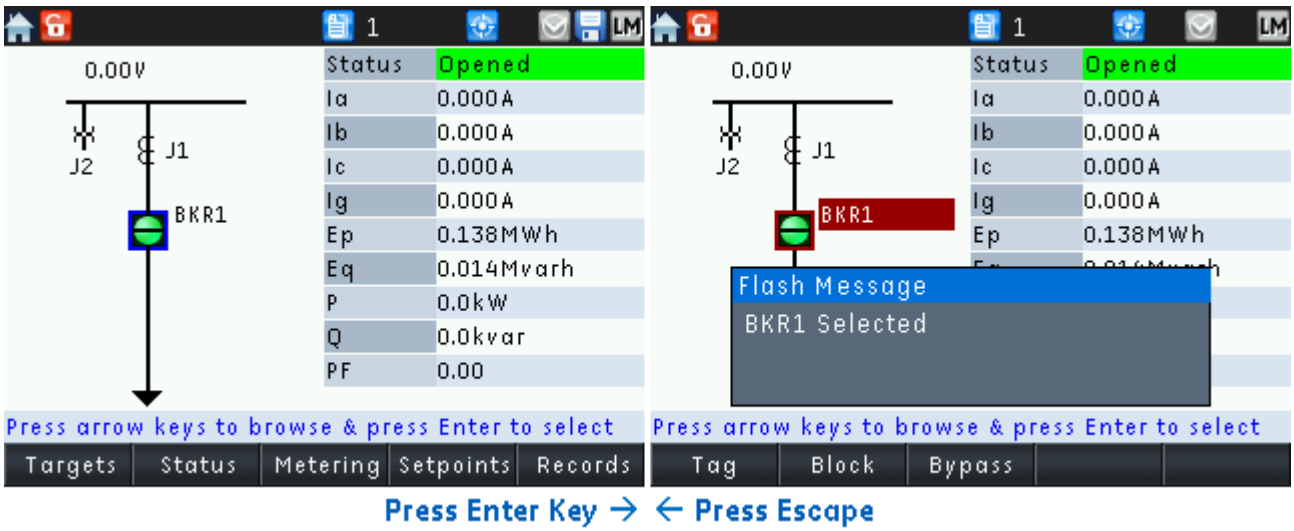

Figure 62: Active element selection with flash message

Browsing and selection is allowed only when the relay is in Local Mode and the user has security access of at least operator level. To check if the relay is in local mode, look for an **LM** symbol on the task pane at the top of the screen. Pressing navigation keys on SLD pages while in remote mode does nothing.

Control pushbuttons appearing on the SLD page are only active while a control object is selected.

The control object is deselected if you navigate to any screen other than the SLD or by pressing the **Escape** key. If no action is taken after selection, the object is automatically deselected after the Bkr/Sw Select timeout setting (***Setpoints*** > ***Control*** > ***Control Mode*** > ***Bkr/Sw Select Timeout***). Once deselected, the control pushbutton labels return to the SLD page navigation labels and the color of the box around the object changes back to blue for browsing. Pressing **Escape** once more removes the browsing highlight around the objects. If inactive during browsing for the timeout setting (***Setpoints*** > ***Device*** > ***Front Panel*** > ***Message Timeout***), the browsing highlight around the object disappears. If an object is selected, **Home** button operation is prohibited. The object must be de-selected by pressing **Escape** in order for the **Home** button to function.

After upgrading from firmware versions 1.3x to 1.7x, the breaker/contactor starting/stopping operations from the front panel now follow a select-before-operate mechanism. The breaker/contactor must be first selected by browsing and pressing the **Enter** key for selection. Once selected, the function can be started or stopped with the front panel's pushbuttons.

3.4.6.6.3 CONTROL OPERATIONS

The control operations carried out through the front panel of the relay are done only in Local Mode (***Setpoints*** > ***Control*** > ***Local Control Mode*** > ***Local Mode***). Opening and closing operations can be carried out by pressing the **Open** and **Close** pushbuttons on the relay front panel. Other operations such as tagging, blocking and bypassing can be carried out by pressing the control pushbuttons that appear after the control object selection.

> *Note:*
> *Remote operations are allowed for opening, closing, blocking, and bypassing. Tagging must be done locally.*
> *It is recommended that tagging is only used for maintenance purposes. When a breaker or a switch is tagged, it cannot be bypassed although the letters **By** may appear below the element on SLD.*
> *If breaker is selected and relay status is changed to Out-of-Service, the breaker control actions, such as tag, blocked, bypass and open/close are blocked. The breaker may remain in the selected state, but no action can be executed.*

Once the selected breaker or switch is tagged, a letter **T** appears below the associated element. Similarly, for blocking, letter **B** appears and for bypassing, letters **By** appear below the associated breaker or switch as shown in the last column of the following figure. The blocking and bypassing letters also appear if the breakers/switches are blocked or bypassed remotely. These are linked to their respective breaker/switch in the SLD Configurator window so that when that breaker/switch is deleted, the letters also get deleted.
Permitted breaker/switch operations are described in the following figure when various letter indications are present under the control element.

Breaker/Switch Position	Letter Indication	Operation	Sample Indication
Open	B	Closing is blocked.	
Closed	B	Opening is blocked.	
Open	B By	Closing is blocked but bypassing is allowed. Closing is permitted.	
Closed	B By	Opening is blocked but bypassing is allowed. Opening is permitted.	
Open or Closed	T	Tagged by operator. No operation allowed.	
Open or Closed	T By	Tagged by operator. No operation allowed.	
Open or Closed	T B By	Tagged by operator. No operation allowed.	

Figure 63: Permitted operations

3.4.7 FLEXCURVE EDITOR

The FlexCurve Editor is designed to graphically view and edit the FlexCurve. The FlexCurve Editor screen is shown as follows for FlexCurves A, B, C, and D:

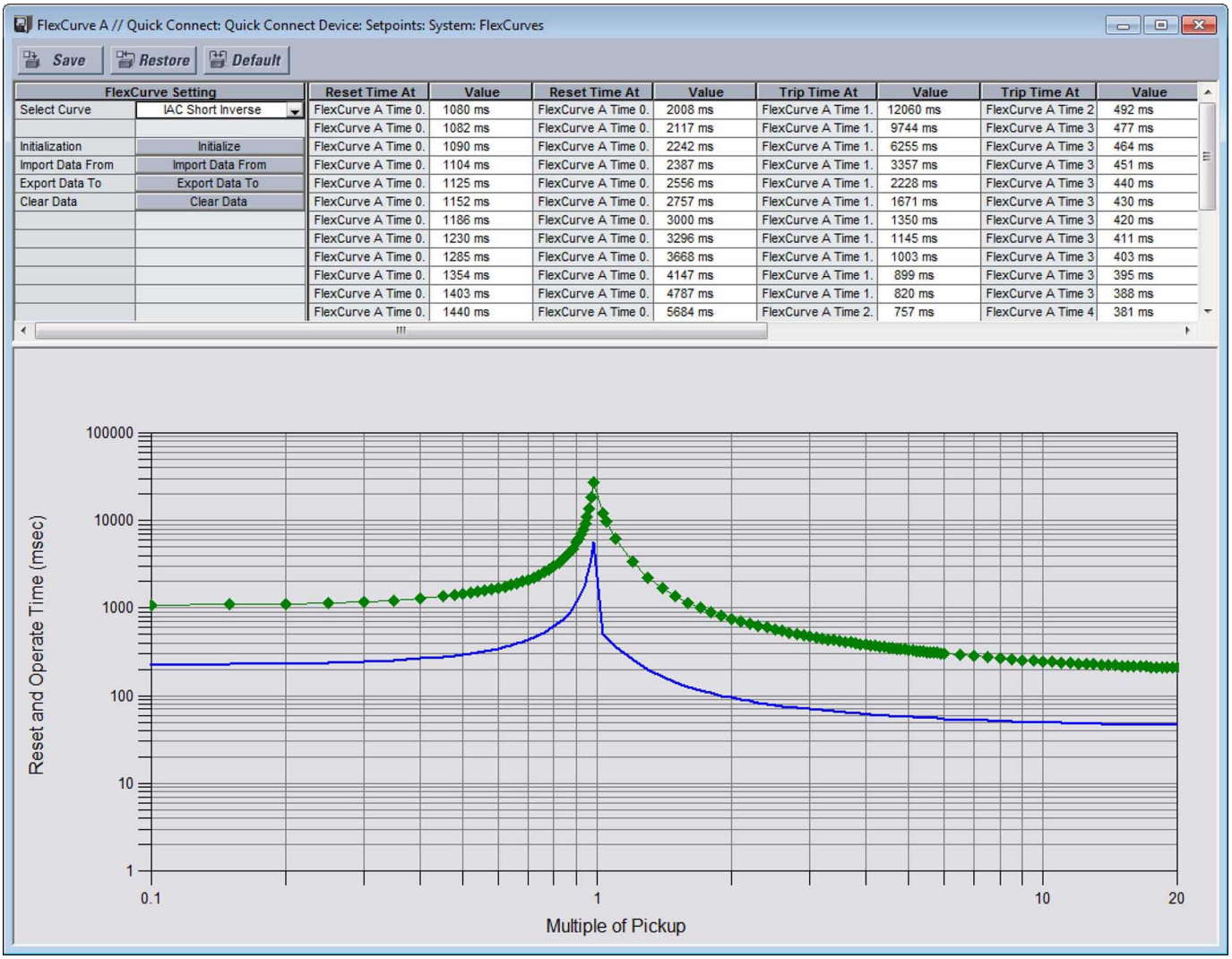

Figure 64: FlexCurve editor

- The Operate Curves are displayed, which can be edited by dragging the tips of the curves
- A Base curve can be plotted for reference, to customize the operating curve. The blue colored curve in the picture is a reference curve. It can be Extremely Inverse, Definite Time, etc.
- The Trip (Reset and Operate) Times in the tables and curves work interactively i.e., changing the table value affects the curve shape and vice versa.
- Save Configured Trip Times.
- Export Configured Trip Times to a CSV file
- Load Trip Times from a CSV File
- The screen above shows the model for viewing FlexCurves. Select **Initialize** to copy the trip times from the selected curve to the FlexCurve.

3.4.8 TRANSIENT RECORDER (WAVEFORM CAPTURE)

EnerVista D&I Setup software can be used to capture waveforms (or view trace memory) from the relay at the instance of a pickup, trip, alarm, or other condition.

Note:
The COMTRADE Version used on 8 Series relays is C37.111-1999.

- With EnerVista D&I Setup software running and communications established, select the ***Records*** > ***Transients*** > ***Transient Records*** menu item to open the Transient Recorder Viewer window.
- Click on **Trigger** to trigger a waveform capture.
- To view the captured waveforms, click on the **Launch Viewer** button. A detailed Waveform Capture window appears as shown below.
- Click on the **Save** button to save the selected waveform to the local PC. A new window appears, requesting the file name and path. One file is saved as a COMTRADE file, with the extension CFG. The other file is a DAT file, required by the COMTRADE file for proper display of waveforms.

- To view a previously saved COMTRADE file, click the **Open** button and select the corresponding COMTRADE file.

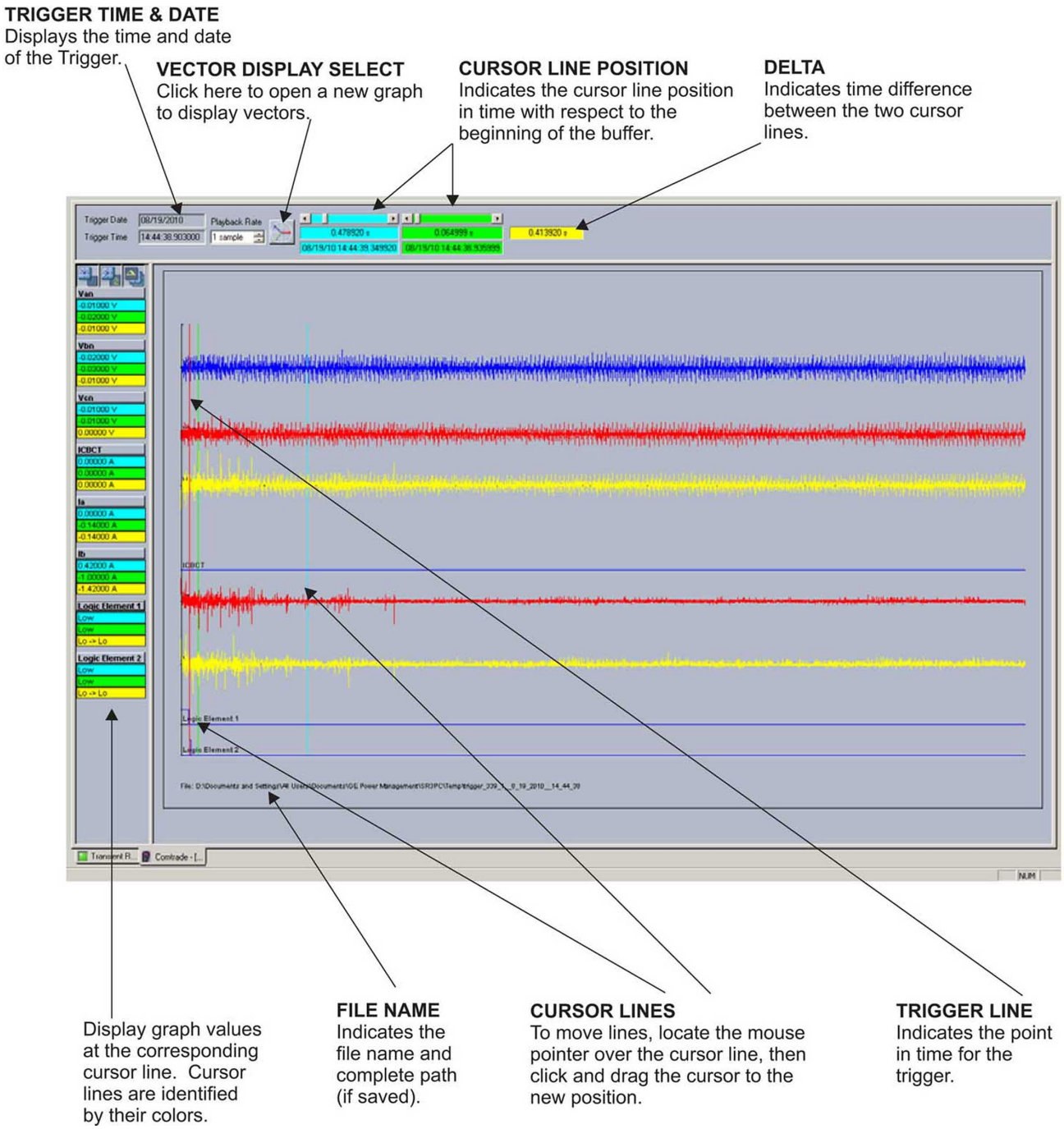

Figure 65: Oscillography

- The red vertical line indicates the trigger point.
- The date and time of the trigger are displayed at the top left corner of the window. To match the captured waveform with the event that triggered it, make note of the time and date shown in the graph, then find the event that matches the same time in the event recorder. The event record provides additional information on the cause and system conditions at the time of the event.
- From the window main menu bar, press the **Preference** button

to open the COMTRADE Setup page, in order to change the graph attributes. Change the color of each graph as desired and select other options as required by checking the appropriate boxes. Click **OK** to store these graph attributes and to close the window. The Waveform Capture window reappears based on the selected graph attributes.

- To view a vector graph of the quantities contained in the waveform capture, press the **View Phasors** button to display the following window:

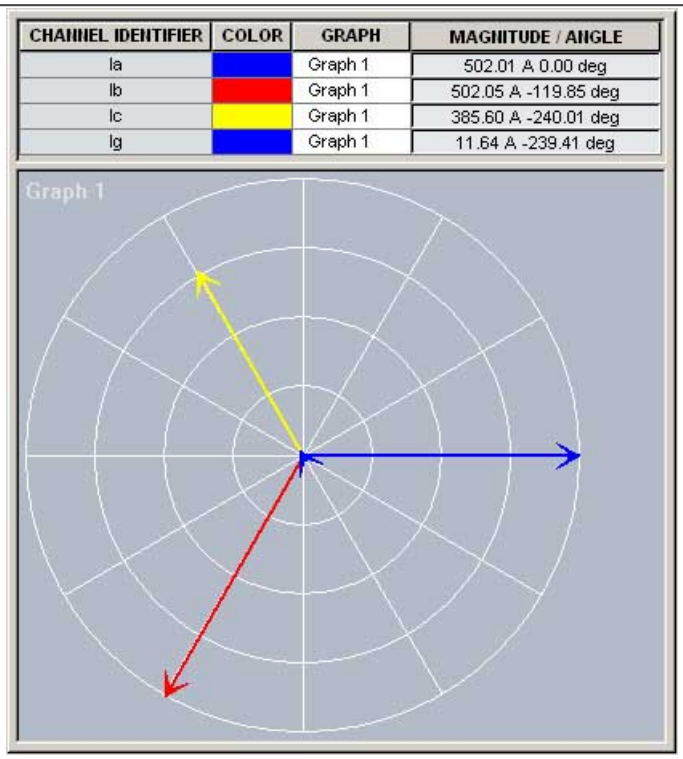

Figure 66: Vector graph

3.4.9 PROTECTION SUMMARY

Protection Summary is a single screen which holds the summarized information of different settings from Grouped Elements and Monitoring Elements.

The Protection Summary Screen allows the user to:

- view the output relay assignments for the elements
- modify the output relay assignments for the elements
- view the Function status for the elements
- navigate to the respective element screen on a button click.

With EnerVista D&I Setup software running and communications established, select the ***Setpoints*** > ***Protection Summary*** menu item to open the Protection Summary window.

3.4.10 FLEXLOGIC FAVOURITES

With EnerVista D&I Setup software version 2.70 and above, use the FlexLogic Favourites to create a customized list of FlexLogic operands that use Format Code FC142.

Select **Edit FlexLogic Favourites** from either the offline menu or the popup menu from an offline CID file to access a screen where the FlexLogic Favourite list can be modified. The FlexLogic Favourites screen includes a left tree that shows all the FlexLogic Operands available for the CID file. The right tree shows all the FlexLogic operands included in the Favourites list.

In the FlexLogic Favourites screen, press the **Smart Update** button to examine the CID file. Any FlexLogic operands associated with an enabled feature/element will be added to the FlexLogic Favourites list. Operands will never be automatically removed from the Favourites list, but can be removed manually by selecting the operand and pressing the **<<** button. Operands can also be added to the Favourites list by selecting the operands in the left tree and pressing the **>>** button.

Select the check-box to use FlexLogic Favourites in any screen with a setting that is configured using the FlexLogic operand (FC142).

FlexLogic Favourites is enabled when the settings are shown in **BOLD** and the background color of the setting is brighter.

3.4.11 OFFLINE SETTINGS FILE CONVERSION

EnerVista D&I Setup software supports conversion of offline settings files created in the SR Series platform. This feature allows the conversion of existing offline setting files to 8 Series files.

EnerVista D&I Setup software reduces the manual effort required when moving from an older product to a newer product. The settings file conversion feature takes an existing settings file and generates a new settings file compatible with the relay specified with the order code. After the import is complete, the results are displayed in an interactive results window.

3.4.11.1 CONVERTING LEGACY FILES

EnerVista D&I Setup software software version 1.6x and above supports conversion of SR 489 files above version 4.0 only to 889 settings files. For files below version 4.0x, first convert these files to version 4.0 or higher using the latest EnerVista D&I Setup software 489 Setup software before doing the conversion.

The conversion can only be initialized with EnerVista D&I Setup software from the Offline/New Settings File commands located in the taskbar, as follows:

1. In the menu taskbar, click on **Offline** and select the **New Settings File** item. The Create New Settings File dialog box appears, which allows for the setpoint file conversion.
2. Select the Firmware Version and Order Code option for the new setpoint file.
3. For future reference, enter some useful information in the Description box to facilitate the identification of the device and purpose for the file.
4. To select the file name and path for the new file, click the button beside the File Name box.

5. To select the SR settings file used for initialization, check the box to the left of Initialize Settings from SR Settings File.
6. To locate and select the file to convert, click the ellipsis button beside the Initialize Settings from SR Settings File box.
7. Click **OK** to begin the conversion and complete the process. Once this step is completed, the new file, with a complete path, is added to the EnerVista D&I Setup software software environment.

> *Note:*
> *If there are settings that are not applicable to the later model, they are ignored and will not appear in the settings list.*

3.4.11.2 CONVERSION SUMMARY REPORT

At the end of the conversion process, the results are summarized in a Settings Conversion Report.

The report is found under Device Definition in the offline file window.

> *Note:*
> *Print the Settings Conversion Report immediately following conversion for future reference in case the report is removed or the settings are modified from the EnerVista D&I Setup software.*

3.4.11.3 RESULTS WINDOW

The conversion summary results window has the following columns:

- **SettingName**: the same tree structure as in the offline window, but with status icons
- **SettingValue**: the converted value for the settings file
- **Original SettingName**: setting name of the input file
- **Original SettingValue**: setting value of the input file

> *Note:*
> *All other settings available (not shown in the conversion report) in the file are set to default and must be verified before putting the relay into service.*
> *Settings in the results window are linked to setting screens. Click in the results window to navigate to the corresponding settings window.*

Status Icons

The status icons show the conversion results:

Manual configuration required

Successful conversion

Value is not supported

Print Report

If desired, the conversion summary report can be printed using the File/Print command in the taskbar or it can be printed from the **GUI** print button.

Note:
Even if the report shows that a conversion has been successful (green checkbox icon), all settings must still be verified before putting the relay in service.

CHAPTER 4

ABOUT SETPOINTS

4.1 CHAPTER OVERVIEW

This chapter contains the following sections:

Chapter Overview 116
About Setpoints 117
Setpoints Entry Methods 118
Common Setpoints 119
Logic Diagrams 121

4.2 ABOUT SETPOINTS

The relay has a considerable number of programmable setpoints, all of which make the relay extremely flexible. These setpoints have been grouped into a variety of menus which are available from the paths shown below. Each setpoints menu has sub-sections that describe in detail the setpoints found on that menu.

Note:
Use the path provided to access the menus from the front panel and from the EnerVista D&I Setup software software. Certain named settings allow custom names. Do not create 13-character long names using the largest width characters (i.e. WWWWWWWWWWWWW). Doing so can cause the last 3 characters to overlap the setting name when viewed from the HMI or the EnerVista D&I Setup software software.

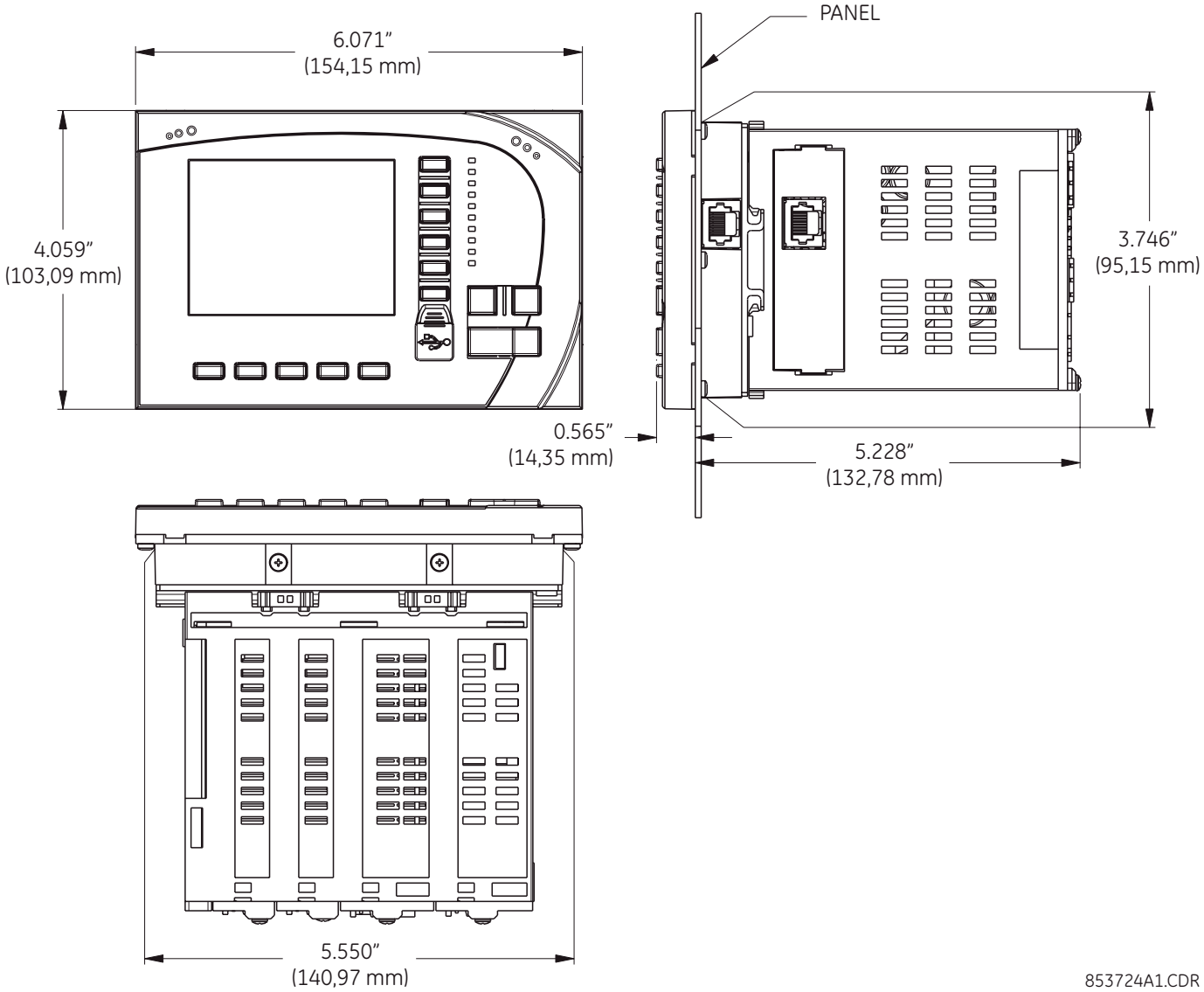

Figure 67: Main Setpoints Display Hierarchy

4.3 SETPOINTS ENTRY METHODS

Before placing the relay in operation, you must enter the setpoints, which define the system characteristics, inputs, relay outputs, and protection settings. You can use one of the following methods:

- Front panel, using the keypad and the display.
- Front USB port, connected to a portable computer running the EnerVista D&I Setup software software.
- Rear Ethernet, copper or fiber port connected to portable computer running the EnerVista D&I Setup software software.
- Rear RS485 port and a SCADA system running user-written software.
- If applicable for your model, using the Wi-Fi wireless connection to a portable computer running the EnerVista D&I Setup software software.

Using a computer is the easiest method, as files can be stored and downloaded for fast, error free entry. To facilitate this process, the EnerVista D&I Setup software software is is available for download. The relay leaves the factory with setpoints programmed to default values, and it is these values that are shown in all the setpoint message illustrations.

At a minimum, you must set the ***Setpoints > System*** setpoints for the system to function correctly. To safeguard against the installation of a relay whose setpoints have not been entered, the **Out-Of-Service** self-test warning is displayed. In addition, the Critical Failure relay is de-energized. Once the relay has been programmed for the intended application, you should change the ***Setpoints*** > ***Device*** > ***Installation*** > ***Device In Service*** setpoint from `Not Ready` (the default) to `Ready`. Before putting the relay in the Ready state, you should work through each page of setpoint messages, entering values either by keypad or computer.

4.4 COMMON SETPOINTS

To make the application of this device as simple as possible, similar methods of operation and similar types of setpoints are incorporated in various features. Rather than repeat operation descriptions for this class of setpoint throughout the manual, a general description is presented in this overview. Details that are specific to a particular feature are included in the discussion of the feature. The form and nature of these setpoints is described below.

FUNCTION

The ***<ELEMENT_NAME> FUNCTION*** setpoint determines the operational characteristic of each feature. The range for this setpoint is: `Disabled`, `Trip`, `Alarm`, `Latched Alarm` and `Configurable`.

If the ***FUNCTION*** setpoint is selected as `Disabled`, then the feature is not operational.

If ***FUNCTION*** is selected as `Trip`, then the feature is operational. When the `Trip` function is selected and the feature operates, the output relay #1 `Trip` operates (when selected as Trip Relay), and the **TRIP** LED is lit.

If ***FUNCTION*** is selected as `Alarm` or `Latched Alarm`, then the feature is operational. When this function is selected and the feature operates, the **ALARM** LED is lit and any assigned auxiliary output relays operate. The `Trip` output relay does not operate, and the **TRIP** LED is not lit.

When `Alarm` is selected and the feature operates, the **ALARM** LED flashes, and it self-resets when the operating conditions are cleared.

When the `Latched Alarm` function is selected, and the feature operates, the **ALARM** LED and Alarm output operands will remain latched. The Latched Alarm can be reset by issuing the reset command.

If ***FUNCTION*** is selected as `Configurable`, the feature is fully operational but outputs are not driving any action, such as output relay #1, **ALARM** LED or anything else. Operands from this element must be programmed to the required action which may be as simple as the auxiliary output relay from the list of available relays in the element itself; FlexLogic, Trip Bus etc.

> *Note:*
> *The FlexLogic operands generated by the operation of each feature are active, and available to assign to outputs, or use in FlexLogic equations, regardless of the selected function, except when the function is set to* `Disabled`*.*

PICKUP

The setpoint selects the threshold equal to or above (for over elements) or equal to or below (for under elements) which the measured parameter causes an output from the measuring element.

PICKUP DELAY

The setpoint selects a fixed time interval to delay an input signal from appearing as an output.

DROPOUT DELAY

The setpoint selects a fixed time interval to delay dropping out the output signal after being generated.

TDM

The setting provides a selection for Time Dial Multiplier which modifies the operating times per the selected inverse curve. For example, if an IEEE Extremely Inverse curve is selected with TDM=2, and the fault current is 5 times bigger than the pickup level, operation of the element can not occur until 2.59 s after pickup.

OUTPUT RELAYS

The ***<ELEMENT_NAME> RELAYS*** setpoint selects the relays required to operate when the feature generates an output. The range is `Operate` or `Do Not Operate`, and can be applied to any combination of the auxiliary output relays. The default setting is `Do Not Operate`.

The available auxiliary relays vary depending on the order code.

DIRECTION

The ***<ELEMENT_NAME> DIRECTION*** setpoint is available for overcurrent features which are subject to control from a directional element. The range is `Disabled`, `Forward`, and `Reverse`. If set to `Disabled`, the element is allowed to operate for current flow in any direction. There is no supervision from the directional element. If set to `Forward`, the OC element is allowed to operate when the fault is detected by the directional element in forward direction. In this mode, the OC element does not operate for fault in reverse direction. If set to `Reverse`, the OC element is allowed to operate when the fault is detected in reverse direction, and does not operate in forward direction.

RESET

Selection of an `Instantaneous` or a `Timed` reset is provided by this setting. If `Instantaneous` is selected, the element resets instantaneously providing the quantity drops below 97 to 98% of the pickup level before the time for operation is reached. If `Timed` is selected, the time to reset is calculated based on the reset equation for the selected inverse curve.

BLOCK

The ***<ELEMENT_NAME> BLOCK*** setpoint selects an operand from the list of FlexLogic operands, which when active, blocks the feature from running. When set to `On` the feature is always blocked; when set to `Off`, block is disabled.

EVENTS

The ***<ELEMENT_NAME> EVENTS*** setpoint can be set to `Enabled`, or `Disabled`. If set to `Enabled`, the events associated with the pickup, operation, or other conditions of the feature are recorded in the Event Recorder.

TARGETS

The ***<ELEMENT_NAME> TARGETS*** setpoint can be set to `Disabled`, `Self-Reset`, or `Latched`. If set to `Self-Reset`, or `Latched`, the targets associated with the pickup, operation, or another condition of the feature are displayed on the screen of the relay. The targets disappear from the screen when `Self-Reset` is selected, and the conditions are cleared. The targets stay on the screen, when `Latched` is selected, and the conditions are cleared.

> *Note:*
> *The targets of status, control and pickup conditions are always self-reset type, regardless of the `Self-Reset`, or `Latched` configuration of setpoint **<ELEMENT_NAME> TARGETS**.*
> *To ensure the settings file inside the relay is updated, wait 30 seconds after a setpoint change before cycling power.*
> *When IP addresses are changed and sent as a Settings file, the unit reboots twice.*

4.5 LOGIC DIAGRAMS

Refer to the logic diagrams provided for a complete understanding of the operation of each feature. These sequential logic diagrams illustrate how each setpoint, input parameter, and internal logic is used in a feature to obtain an output. In addition to these logic diagrams, the Setpoints chapter provides written descriptions for each feature.

- **Setpoints**: Shown as a block with a heading labeled SETPOINT. The exact wording of the displayed setpoint message identifies the setpoint. Major functional setpoint selections are listed below the name and are incorporated in the logic.
- **Comparator Blocks**: Shown as a block with an inset box labeled RUN with the associated pickup/dropout setpoint shown directly above. Element operation of the detector is controlled by the signal entering the RUN inset. The measurement/comparison can only be performed if a logic 1 is provided at the RUN input. The relationship between a setpoint and input parameter is indicated by the following symbols: < (less than), > (greater than), etc.
- **Pickup and Dropout Time Delays**: Shown as a block with indication of two timers – the t_{PKP} (Pickup Delay), and t_{DPO}(Dropout Delay).
- **LED Indicators**: Shown as the following schematic symbol **(X)**.
- **Logic**: Described with basic logic gates (AND, OR, XOR, NAND, NOR). The inverter (logical NOT), is shown as a circle: **O**
- **FlexLogic operands**: Shown as a block with a heading labeled FLEXLOGIC OPERANDS. Each feature produces output flags (operands) which can be used further for creating logic in the FlexLogic equation editor, or Trip Bus, or can be directly assigned to trigger an output. The operands from all relay features constitute the list of FlexLogic operands.

CHAPTER 5

DEVICE SETPOINTS

5.1 CHAPTER OVERVIEW

This chapter describes the Device setpoint menu settings in detail.

This chapter contains the following sections:

Chapter Overview	124
Device menu hierarchy	125
Custom Configuration	126
Real-time Clock	129
Security	134
Communications	144
Transient Recorder	173
Data Logger	175
Fault Reports	178
Event Data	180
Flex states	181
Front Panel	182
Resetting	201
Installation	202
Self-test errors	204
Clear Records	209

5.2 DEVICE MENU HIERARCHY

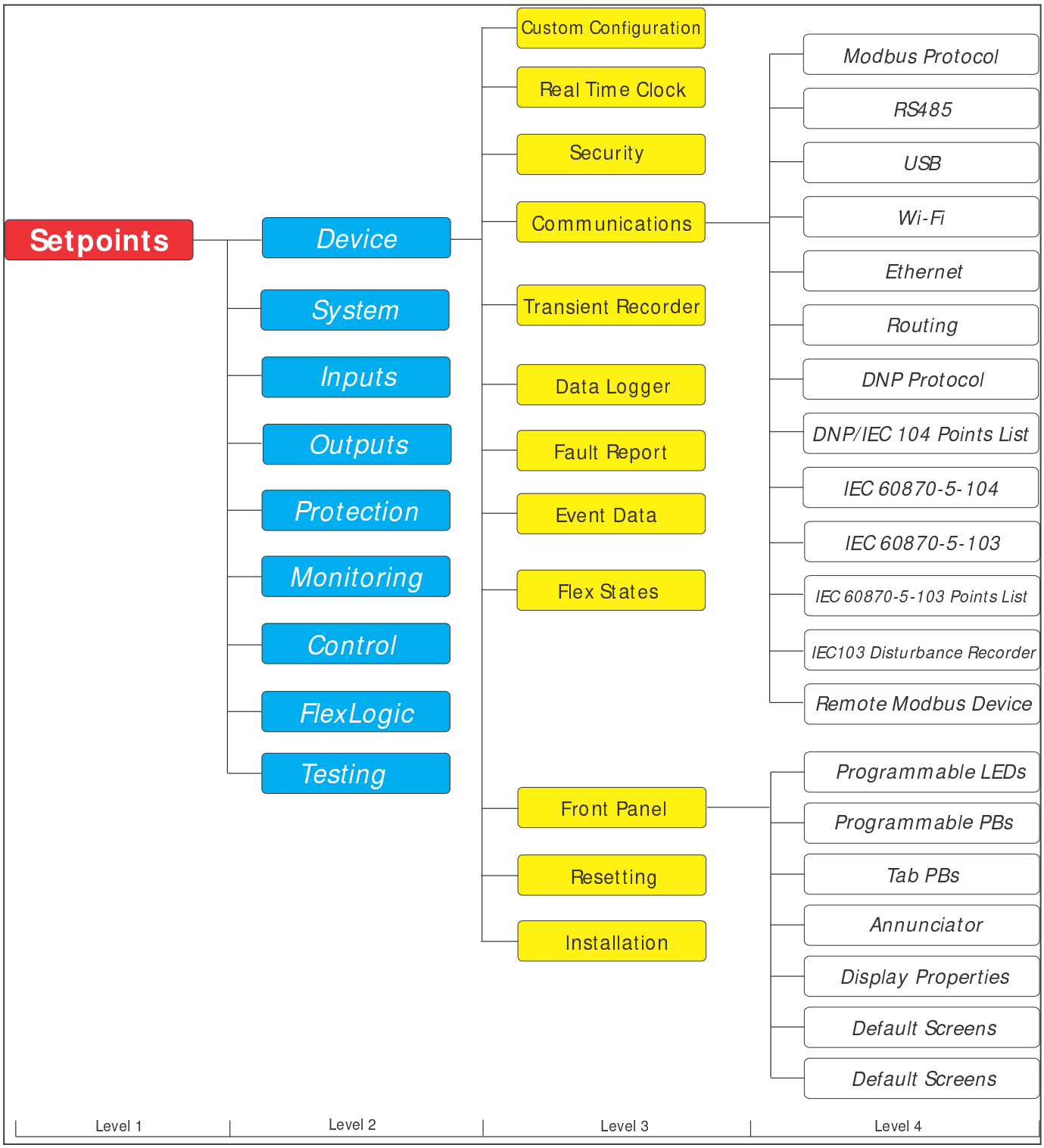

Figure 68: Device Display Hierarchy

5.3 CUSTOM CONFIGURATION

The custom configuration features allows you to customize the configurations as desired.

Configuration Mode

The 8-series platform, supports a multitude of functions and features including:

- Protection and Control (P&C)
- Asset Monitoring
- Flexible Logic Engine (FlexLogic)
- Records and Reporting
- Time Synchronization
- Testing/Simulation

Taking into consideration user experience, configuration mode controls how the Setpoints are presented by only displaying settings that are typically used, or settings that are important to configure.

Two configuration modes are supported:

- **Simplified** - In this mode, some of the functions, features and settings are hidden or made read-only (grayed out). All the settings made in Regular configuration mode are still applied during simplified mode (they are either hidden or read-only), so simplified configuration mode can also be seen as a way of locking advanced setpoints.
- **Regular** - In this mode, all function/features and setpoints of the device are editable and nothing is hidden or grayed out.

Configuration mode is applicable to the Setpoints items only and does not control view/presentation to other main menu items, such as Device Definition, Status, Metering, Records, Commands and Maintenance. The configuration mode setting is available to be changed by the Administrator role. The configuration mode control is applicable to device HMI and setup software, as well as online and offline setting files.

> *Note:*
> *Configuration mode does not disable the device functionality or settings. It only controls the view or presentation on the HMI and setup software screens. Therefore, settings which are hidden or Read-only are preserved and applied within the device.*

The home icon on the home page changes color according to the configuration mode. When in Simplified configuration mode, the home icon color is green. When in regular mode the home icon color is blue.

Example 1: Setting items view control

The ***Phase TOC 1*** function in Regular mode has 14 editable setpoints. In the Simplified mode this function has only 6 out of the 14 setpoints made available to edit. 5 setpoints are hidden, and 3 setpoints are read/view-only.

> *Note:*
> *All setpoints under Regular mode are still applied and used by the device. For example the **Input** is hidden but configured as `Phasor` during Regular mode, therefore **Phase TOC 1** still applies `Phasor` as an input. Similarly, **Reset** is read-only, and **Phase TOC 1** still applies `Instantaneous` for resetting. The read-only settings are greyed out.*

Regular

..\Current\Phase TOC 1

Item Name	Value	Unit
Function	Disabled	
Signal Input	CT Bank 1 -J1	
Input	Phasor	
Pickup	1.000	x CT
Curve	IEEE Mod Inverse	
TDM	1.00	
Reset	Instantaneous	
Direction	Disabled	
Voltage Restraint	Disabled	
Volt Lower Limit	0.1	p.u.
Block	Off	
Relays	Do Not Operate	
Events	Enabled	
Targets	Self-Reset	

PTOC 1

Simplified

..\Current\Phase TOC 1

Item Name	Value	Unit
Function	Disabled	
Signal Input	CT Bank 1 -J1	
Pickup	1.000	x CT
Curve	IEEE Mod Inverse	
TDM	1.00	
Reset	Instantaneous	
Direction	Disabled	
Voltage Restraint	Disabled	
Relays	Do Not Operate	

PTOC 1

Figure 69: Comparison of the setpoints for Regular and Simplified mode

Example 2: Function/Feature view control

The differences in the ***Inputs*** setpoint screens for Regular and Simplified mode are shown below. Under Simplified mode, the ***Virtual Inputs*** and ***Remote Inputs*** are hidden for any configuration change. However, the device will still accept and process virtual and remote inputs based on what is configured during Regular mode. This way, Simplified configuration mode does not change the behavior of the device.

Regular

..\Setpoints\Inputs

Item Name
Contact Inputs
Virtual Inputs
Analog Inputs
Remote Inputs

Inputs V Inputs MA In Rem In

Simplified

..\Setpoints\Inputs

Item Name
Contact Inputs
Analog Inputs

Inputs MA In

Figure 70: Comparison of the Inputs screens for Regular and Simplified mode

CONFIG MODE

Path: ***Setpoints*** > ***Device*** > ***Config Mode***

Range: Simplified, Regular

Default: Regular

This setting allows selection of the configuration mode while the device is accessed by the Administrator role. In `Regular` configuration mode, all values in settings/functions can be edited. In `Simplified` configuration mode, selected settings/functions are hidden or the values are read-only to enhance user experience with minimum setpoint changes.

5.4 REAL-TIME CLOCK

Path: ***Setpoints*** > ***Device*** > ***Real Time Clock***

The relay is capable of receiving a time reference from several time sources in addition to its own internal clock for the purpose of time-stamping events, transient recorders and other occurrences within the relay. The accuracy of the time stamp is based on the time reference that is used. The relay supports an internal clock, SNTP, IRIG-B, and PTP IEEE 1588 (version 2) as potential time references.

If two or more time sources are available, the time source with the higher priority shown in Time Sources table is used where 1 is considered to be the highest priority. Please note that the time source priority of PTP and IRIG-B can be swapped. If both PTP and IRIG-B are available, by default the clock syncs to PTP over IRIG-B. If PTP is not available, the CPU syncs the internal clock to IRIG-B.

Time Sources

Time Source	Priority
PTP (IEEE1588)	1*
IRIG-B	2*
SNTP	3
Internal Clock	4

* The priority of IRIG-B and PTP can be swapped.

> *Note:*
> *Synchronization by IEC103, DNP, Modbus and IEC104 is not going to be issued if there is a sync source from IRIG-B, SNTP or PTP.*

5.4.1 PTP CONFIGURATION

Path: ***Setpoints*** > ***Device*** > ***Real Time Clock*** > ***Precision Time***

PORT 4(5) PTP FUNCTION

Range: Disabled, Enabled

Default: Enabled

When the port setting is selected as `Disabled` PTP is disabled on the port. The relay does not generate, or listen to, PTP messages on the port.

PORT 4(5) PATH DELAY ADDER

Range: 0 to 60000 ns in steps of 1 ns

Default: 0 ns

The time delivered by PTP is advanced by the time value in the setting prior to the time being used to synchronize the relay's real time clock. This is to compensate for time delivery delays not compensated for in the network. In a fully compliant Power Profile (PP) network, the peer delay and the processing delay mechanisms compensate for all the delays between the grandmaster and the relay. In such networks, the setting is zero.

In networks containing one or more switches and/or clocks that do not implement both of these mechanisms, not all delays are compensated, so the time of message arrival at the relay is later than the time indicated in the message. The setting can be used to approximately compensate for the delay. Since the relay is not aware of network switching that dynamically changes the amount of uncompensated delay, there is no setting that always completely corrects for uncompensated delay. A setting can be chosen that reduces worst-case error to half of the range between minimum and maximum uncompensated delay if these values are known.

PORT 4(5) PATH DELAY ASYMMETRY

Range: -1000 to +1000 ns in steps of 1 ns

Default: 0 ns

The setting corresponds to Delay Asymmetry in PTP, which is used by the peer delay mechanism to compensate for any difference in the propagation delay between the two directions of a link. Except in unusual cases, the two fibers are of essentially identical length and composition, so the setting is set to zero.

In unusual cases where the length of link is different in different directions, the setting is to be set to the number of nanoseconds longer the Ethernet propagation delay is to the relay compared with the mean of path propagation delays to and from the relay. For instance, if it is known say from the physical length of the fibers and the propagation speed in the fibers that the delay from the relay to the Ethernet switch it is connected to is 9000 ns and that the delay from the switch to the relay is 11000 ns, then the mean delay is 10000 ns, and the path delay asymmetry is +1000 ns.

STRICT POWER PROFILE

Range: Enabled, Disabled

Default: Enabled

Power profile (IEEE Std C37.238™ 2011) requires that the grandmaster clock be power profile compliant, that the delivered time have a worst-case error of ±1 µs, and that the peer delay mechanism be implemented. With the strict power profile setting enabled, the relay selects as master only clocks displaying the IEEE_C37_238 identification codes. It uses a port only when the peer delay mechanism is operational. With the strict power profile setting disabled, the relay uses clocks without the power profile identification when no power profile clocks are present, and uses ports even if the peer delay mechanism is non-operational.

The setting applies to all of the relay's PTP-capable ports.

PTP DOMAIN NUMBER

Range: 0 to 255

Default: 0

The setting is set to the domain number of the grandmaster-capable clock(s) to which they can be synchronized. A network may support multiple time distribution domains, each distinguished with a unique domain number. More commonly, there is a single domain using the default domain number zero.

The setting applies to all of the relay's PTP-capable ports.

PTP VLAN PRIORITY

Range: 0 to 7

Default: 4

The setting selects the value of the priority field in the 802.1Q VLAN tag in request messages issued by the relay's peer delay mechanism. In compliance with PP (Power Profile) the default VLAN priority is 4, but it is recommended that in accordance with PTP it be set to 7.

Depending on the characteristics of the device to which the relay is directly linked, VLAN Priority may have no effect.

The setting applies to all of the relay's PTP-capable ports.

PTP VLAN ID

Range: 0 to 4095

Default: 0

The setting selects the value of the ID field in the 802.1Q VLAN tag in request messages issued by the relay's peer delay mechanism. It is provided in compliance with PP (Power Profile). As these messages have a destination address that indicates they are not to be bridged, their VLAN ID serves no function, and so may be left at its default value.

Depending on the characteristics of the device to which the relay is directly linked, VLAN ID may have no effect.

The setting applies to all of the relay's PTP-capable ports.

PTP PRIORITY

Range: 1, 2

Default: 1

The setting sets the priority of PTP time for the relay. If set to 1 and IRIG-B is available, the relay syncs the relay's time reference to the PTP time. If set to 2 and IRIG-B is available, the relay syncs its reference to IRIG-B time.

5.4.2 CLOCK

Path:***Setpoints*** > ***Device*** > ***Real Time Clock*** > ***Clock***

DATE

Format: Month/Day/Year

Range: Month: 1 to 12; Day: 1 to 31; Year: 2008 to 2094

Default: 01/01/2008

TIME

Range: 0 to 23: 0 to 59:0 to 59

Default: 00:00:00

LOCAL TIME OFFSET FROM UTC

Range: –24.00 to 24.00 hrs in steps of 0.5 hrs

Default: 0.00 hrs

REAL TIME CLOCK EVENTS

Range: Disabled, Enabled

Default: Enabled (FW 3.00), Disabled (FW4.10)

IRIG-B

Range: Disabled, Enabled

Default: Disabled

DAYLIGHT SAVINGS TIME

Range: Disabled, Enabled

Default: Disabled

DST START MONTH

Range: January to December (all months)

Default: Not Set

DST START DAY

Range: SUN to SAT (all days of the week)

Default: Not Set

DST START WEEK

Range: 1st, 2nd, 3rd, 4th, Last

Default: Not Set

DST START HOUR

Range: 0 to 23

Default: 2

DST END MONTH

Range: January to December (all months)

Default: Not Set

DST END WEEK

Range: 1st, 2nd, 3rd, 4th, Last

Default: Not Set

DST END DAY

Range: SUN to SAT (all days of the week)

Default: Not Set

DST END HOUR

Range: 0 to 23

Default: 2

> *Note:*
> *IRIG-B is available in all relays. A failure on IRIG-B triggers an event and a target message.*
> *IRIG-B is auto-detected. The signal type is detected in the hardware, so there are no configurable options.*

5.4.3 SNTP PROTOCOL

8 series relays accept time synchronization from up to two different SNTP servers. In order to define number of SNTP servers to be used, different settings for each SNTP server must be configured.

- If one SNTP server is used to synchronize the relay, the SNTP Server and UDP port settings must be configured with the corresponding settings.
- If two SNTP servers are used to synchronize the relay, the SNTP Server IP and UDP port for the main server must be configured, along with the SNP Server 2 IP and UDP port for the back-up server.

> *Note:*
> *8 Series relays only support SNTP unicast. It may take 2-3 minutes for the relay to synchronize with the SNTP server.*

Path: ***Setpoints*** > ***Device*** > ***Real Time Clock*** > ***SNTP***

SNTP FUNCTION

Range: Disabled, Enabled

Default: Disabled

SNTP SERVER IP ADDRESS

Range: Standard IP Address Format

Default: 0.0.0.0

SNTP UDP PORT NUMBER

Range: 0 to 65535 in steps of 1

Default: 123

SNTP SERVER 2 IP ADDRESS

Range: Standard IP Address Format

Default: 0.0.0.0

SNTP 2 UDP PORT NUMBER

Range: 0 to 65535 in steps of 1

Default: 123

Note:
The SNTP and PTP settings take effect after rebooting the relay.

5.5 SECURITY

OVERVIEW

The following security features are available:

- **Basic Security** – The basic security feature is the default offering of the product.
- **CyberSentry** – This feature refers to the advanced security options available as a software option. When this option is purchased, it is automatically enabled and Basic Security is disabled.

GENERAL RULES FOR ROLES

- All the roles are password protected, except for the Observer role which is user-defined on the device. A user with Observer capability defined on the Radius is password protected.
- All the roles, except for the role, support only one session at one time.
- The Observer role has read-only access to all values in the relay except for one service command which is described in the *Password Recovery Procedure* section below.
- In an Advanced security IED, all the roles can choose to log out. In a basic security IED, all the roles, except for Observer, are able to log out.
- The setpoint access is used for the purpose of bypassing security on the interface defined by the ***BYPASS ACCESS*** setting.
- The setpoint access setting may be either switched directly on or assigned to a digital input.
- If the setpoint access setting is assigned to a digital input, the digital input needs to be activated through a physical key (jumper).
- The setpoint access setting may be set only by an Administrator.

PASSWORD COMPLEXITY

The password complexity is available on both Basic Security and Advanced Security.

If password complexity is enabled, a user account requires an alpha-numeric password that meets the following requirements:

- Passwords cannot contain the user account name or parts of the user's full name that exceed two consecutive characters
- Passwords must be 8 to 20 characters in length
- Passwords must contain characters from the following four categories: - English uppercase characters (A through Z) - English lowercase characters (a through z) - Base 10 digits (0 through 9) - Non-alphanumeric characters (e.g. ~, !, @, #, $,%,&)

PASSWORD RECOVERY PROCEDURE

In the event of losing all passwords, the relay can be reset to factory defaults by following the procedure below:

1. Send an email to the customer support department providing a valid serial number and using a recognizable corporate email account. (Worldwide e-mail: multilin.tech@ge.com)
2. Customer support provides the code to reset the relay to factory defaults.
3. Enter the code provided from the front panel, under the menu ***Setpoints*** > ***Device*** > ***Installation*** > ***Service Command*** to reset the relay to factory defaults.

> *Note:*
> *Even an Observer may execute this operation.*

The current limitation for the maximum number of Observer sessions is three when the Communications card is present.

When the communications card is not present, a maximum of two Observer sessions may be initiated through EnerVista D&I Setup software. If two Observers are connected, a third connection is only allowed for an Administrator. No Operator has access. However, if an Operator connects before any other user, only one Observer is allowed, so that an Administrator can connect. This is because the maximum number of TCP connections when the Communications card is not present, is only three. (With a Communications card, the maximum number of TCP connections is five.)

SECURE TUNNELING

The following items are supported in the feature:

- Under the CyberSentry option, the Multilin supports SSH secure tunneling of MODBUS communications between itself and EnerVista D&I Setup software.
- SSH secure tunneling is supported on Ethernet only.
- If bypass security is set (through setpoint access), the communications over Ethernet is not encrypted.

ROLE ACCESS MAP

The detailed role access map is defined in the following figure.

Roles	Administrator	Operator	Observer
	Complete Access	Command Menu	Role active by default.
Targets	R	R	R
|---------- Clear	Yes	Yes	No
Status	R	R	R
Metering	R	R	R
Setpoints			
|---------- Device			
| |---------- Real Time Clock	RW	RW	R
| |---------- Security	RW	R	R
| |---------- Communications	RW	R	R
|			
Records			
|---------- Clear	Yes	Yes	No
Maintenance			
|---------- Modbus Analyzer	NA	NA	NA
|---------- Update Firmware	Yes	No	No
|---------- Retrieve File	Yes	Yes	Yes events, oscillography, diagnostic

Figure 71: Role Access Map

> *Note:*
> *Commands may be issued freely through protocols other than Modbus (e.g., DNP, IEC 104, and IEC 61850) without user-authentication or encryption of data taking place, even if the relay has the advanced security feature enabled.*

5.5.1 BASIC SECURITY

The Basic Security supports three roles: Administrator, Operator and Observer.

The main settings structure is available from **Path: *Setpoints*** > ***Device*** > ***Security.***

LOGIN

The setting allows a user to login with a specific role.

1. Whenever a new role is logged in, the user is prompted to enter a password.
2. If the wrong password is entered, an **Authentication Failed!** message is displayed
3. If the maximum failed authentications occur an **Account Blocked!** message is displayed.
4. The Observer is the default choice and it does not require a password.

LOGOUT

This setting logs out the current user and logs in as an Observer. If the user is already an Observer, this setting does not apply. When logging out, a switch to Observer role is performed.

CHANGE PASSWORDS

1. The **Change local passwords** menu is shown on the front panel and EnerVista D&I Setup software on a successful login of Administrator role.
2. If password complexity is enabled, the rules as defined in Security must be obeyed. If password complexity is disabled this setting accepts 1 to 20 alphanumeric characters. See **Path: *Setpoints* > *Device* > *Security* > *Change Local Passwords***.
3. The default password is `0`, which is programmed from the factory.
4. The login setting in this menu is similar to that in the parent security settings.
5. The Observer does not have password associated with it, so it is not shown in this setting.

LOAD FACTORY DEFAULTS

The Administrator role can change this setting. This setting resets all the settings, communication and Security passwords, and all records.

ACCESS LOCKOUT

Access lockout is the number of failed authentications (the default is 3 and the maximum is 99) before the device blocks subsequent authentication attempts for the lockout period. A value of `0` means ***Access Lockout*** is disabled.

ACCESS LOCKOUT PERIOD

Access lockout period is the period of time in minutes of a lockout (the default is 3 and the maximum is 9999). A value of `0` means that there is no lockout period.

ACCESS TIMEOUT

Access timeout is the time of idleness before a logged in user is automatically logged out. This timeout applies to all users, independent of the communication channel (serial, Ethernet or direct access).

PASSWORD COMPLEXITY

This setting is available so that the option of selecting between simple passwords and complex ones is provided.

- The setting is only available to Administrator.
- By default ***Password Complexity*** is `Disabled`.
- When ***Password Complexity*** is `Enabled`, it follows the rules defined in Security.

OPERATOR PIN PASSWORD

This setting allows a numeric password for the Operator even when ***Password Complexity*** is `Enabled`. When the Operator PIN password is enabled, a virtual numeric keypad is shown instead of a virtual keyboard. By default, ***Operator PIN Password*** is `Disabled`. Changing this setting changes the Operator password to the default `0`.

SETPOINT ACCESS

This setting is only available to Administrator. It is used for the purpose of bypassing security. It can be either switched on or assigned to a digital input. If assigned to a digital input, the digital input needs to be activated through a physical key.

Event Record	Description
FAILED AUTH	A failed authentication has occurred. Time stamp in UTC when it occurred is provided.
AUTH LOCKOUT	The authentication lockout has occurred because of too many failed authentication attempts.
LOGIN	An event meant to indicate when a certain role logged in.
LOGOUT	An event meant to indicate when a certain role logged out or timed out.

Note:
If the maximum number of Observer roles already logged in on the relay has been reached, you must log in on the Security screen within one minute of making the connection otherwise your session is terminated.

FACTORY SERVICE MODE

When the factory service mode feature is enabled, the device may go into factory service mode. The default value is `Disabled`.

REQUIRE PW FOR RESET KEY

This setting is only available to the Administrator. The ***Require PW for Reset Key*** is used for the purpose of bypassing security. If this setting is `Enabled` and an alarm or trip occurs on the relay, the **Reset** button is not available to the Operator. Only the Administrator can reset the relay with their password.

REQUIRE PW FOR D/T CHANGE

The date/time can be set by any role, if this setting is disabled. If this setting is enabled the date/time can only be set by the Administrator.

REQUIRE PW FOR CONTROL

If this setting is disabled, Operator controls do not require a password. If this setting is `Enabled`, an Operator password is required. By default ***Require PW for Control*** is `Enabled`.

5.5.2 CYBERSENTRY

The following features are supported in the CyberSentry feature:

- CyberSentry provides secure tunneling of MODBUS communications between itself and the EnerVista D&I Setup software software, using SSH.
- All the roles supported in the Basic Security are supported.
- Server authentication using RADIUS is added.

SECURITY SETTINGS STRUCTURE

The figure below shows the location of the Security settings in the device display hierarchy.

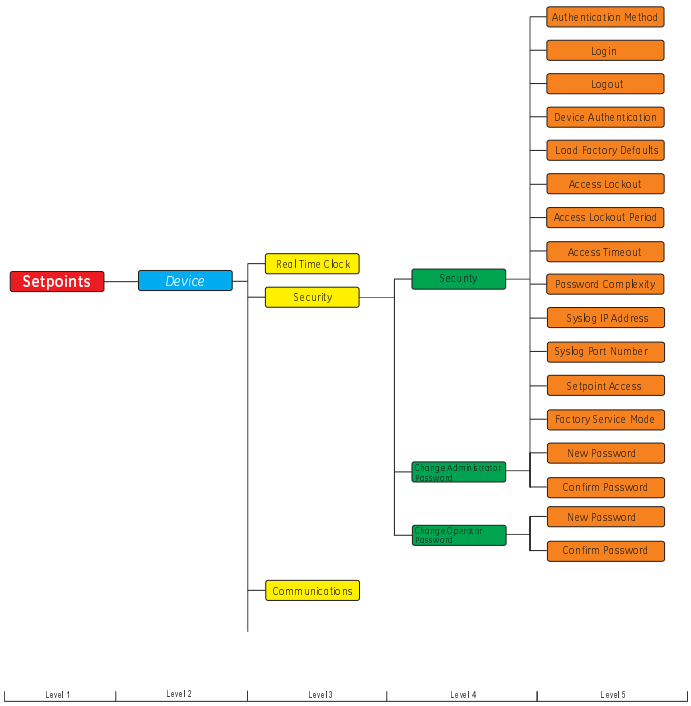

Figure 72: Security Settings Structure

SECURITY SETTINGS

AUTHENTICATION METHOD

Range: Device, Server

Default: Device

When this setting is configured as `Device` then the user can log into Device Authentication using the keypad on the HMI. In this case, the setting ***Login*** will show a drop-down list, enabling the selection of `Administrator`, `Operator` or `Observer` as the username. When configured as `Server`, the user can log into Server Authentication using the keypad on the HMI. In this case, the setting ***Login*** will show text space and a keypad on the HMI so that the user can enter a custom name as a remote username. When the ***Authentication Method*** setting is modified, the existing user will be logged out and will have to login again.When Device Authentication is configured as `No`, then the HMI will continue to display the option to select Authentication Method as `Device` or `Server`. But if the user chooses `Device` as the Authentication Method and then tries to login, the drop-down list of users will only display `Administrator`. It will not show `Operator` or `Observer`.

LOGIN

Range: Administrator, Operator, Observer

Default: Observer

The setting allows a user to login with a specific role.

Whenever a new role is logged in, the user is prompted to enter a password. If the wrong password is entered, an **Authentication Failed!** message is displayed. If the maximum failed authentications occur, the **Account Blocked!** message is displayed. Observer is the default and it does not require a password.

LOGOUT

Range: Yes, No

Default: No

This setting logs out the current user. When logging out from the panel, a switch to the Observer role is performed.

DEVICE AUTHENTICATION

Range: Yes, No

Default: Yes

Device authentication setting offers the option to disable or enable this type of authentication. By default device authentication is on, but the option to turn it off is provided and may be chosen when a RADIUS server is accessible and will be used exclusively.

Only an Administrator role may change this setting. If an Administrator disables it, the role remains logged in, but it is not allowed to write any other settings. In EnerVista D&I Setup software, a popup window warns that such changes are not going to be saved.

If device authentication is disabled, EnerVista D&I Setup software still displays both radio buttons for choosing between device and server authentication. However the drop down menu, when local is selected, has only the Administrator option. Once logged in, this role is only able to switch on device authentication. After switching on the device authentication, the Administrator gains write access to all the other settings without the need to logout and login again.

LOAD FACTORY DEFAULTS

Range: Yes, No

Default: No

An Administrator role is able to change this setting. This resets all the settings, communication and security passwords, and all records.

ACCESS LOCKOUT

Range: 0-99

Default: 3

This is the set number of failed authentications before the device blocks subsequent authentication attempts for the lockout period. A value of `0` means that ***Access Lockout*** is disabled.

ACCESS LOCKOUT PERIOD

Range: 0-9999 minutes

Default: 3 minutes

This is the set period of time in minutes of a lockout. A value of `0` means that there is no lockout period.

> *Note:*
> *The lockout period is measured from the moment the maximum number of failed authentications has been reached. Additional attempts to login during the lockout period do not extend this time.*

ACCESS TIMEOUT

Range: 2-999 minutes

Default: 5 minutes

This is the time of idleness before a logged in user is automatically logged out. The ***Access Timeout*** setting applies to all users, independent of the communication channel (serial, Ethernet or direct access).

ENABLE PASSWORD COMPLEXITY

Range: Disabled, Enabled

Default: Disabled

This setting is available to provide the option of selecting between simple passwords and complex ones. It is only available to the Administrator role. When password complexity is enabled, it follows the rules defined in Security.

SYSLOG IP ADDRESS

Range: 0.0.0.0 to 223.255.255.254

Default: 0.0.0.0

This is the IP address of the target Syslog server all security events are transmitted to.

SYSLOG PORT NUMBER

Range: 1 to 65535

Default: 514

This sets the UDP port number of the target Syslog server all security events are transmitted to.

SETPOINT ACCESS

Range: Off, On, Digital Input

Default: Off

This setting is only available to the Administrator role. ***Setpoint Access*** may be assigned to a digital input. When the digital input is activated, the user has Administrator access to the front panel.

FACTORY SERVICE MODE

Range: Disabled, Enabled

Default: Disabled

When the feature is `Enabled`, the Factory role is accessible and the device can enter factory service mode.The setting may be changed only by an Administrator.

> *Note:*
> *The factory role password cannot be altered.*

REQUIRE PW FOR RESET KEY

Range: Disabled, Enabled

Default: Disabled

If this setting is `Enabled` and an alarm or trip occurs on the relay, the **Reset** button is not available to the Operator. Only the Administrator can reset the relay with their password.

REQUIRE PW FOR D/T CHANGE

Range: Disabled, Enabled

Default: Disabled

The date/time can be set by any role, if this setting is disabled. If this setting is enabled the date/time can only be set by an Administrator.

CHANGE PASSWORD SETTINGS

The two menu items: ***Change Administrator Password***, and ***Change Observer Password*** are available only to Administrator, which is the only role that has permissions to change passwords for itself and the other local roles. Each password change menu has two settings: ***New Password*** and ***Confirm Password***. With ***Enable Password Complexity*** enabled, each setting can have 6 to 20 alphanumeric characters. With ***Enable Password Complexity*** disabled, each setting takes 1 to 20 alphanumeric characters.

If ***Enable Password Complexity*** is enabled, its rules must be obeyed. The default password is `0`. The Observer role does not have a password associated with it, so there is no need to show it in the list of password changing roles.

EnerVista D&I Setup software SETUP

For the software setup the following applies:

- Some security settings (such as Radius configuration) are only accessible and configurable through the Enervista program.
- The Enervista software only allows for changes that are permitted by the user's logged in role. For example, the Observer role cannot write to any settings, but can only view.
- If the settings file is modified off line, the relay checks for the role of the user and allows the download only if the role is Administrator (see table below). If the role is different, EnerVista D&I Setup software notifies the user via a pop-up window that this operation is allowed only for Administrators.
- The EnerVista D&I Setup software Login Screen has two radio buttons to choose between device and server authentication.
    - If server authentication is chosen, the screen provides **User Name:** and **Password:** fields
    - If device authentication is chosen the **User Name:** field changes to a drop down menu. If device authentication is enabled internally, the drop down menu contains all predefined roles. If device authentication is disabled, the drop down menu has only the Administrator option. This is to allow for switching on the device authentication. Once logged in, the Administrator is only able to turn on the device authentication, but once the device authentication is enabled, access to all the other settings is granted.
- A file download may be performed only from the relay.

Access type	File type	Administrator	Operator	Observer
Read (download from relay)	All files	Yes	Yes	Yes
Write (Upload to relay)	Settings file	Yes	No	No
Write (Upload to relay)	Firmware	Yes	No	No

Note:
In special cases security settings, such as RADIUS IP address and port, if modified offline, can result in interruption of service when applied online, if the user is not aware of the change having been made. For this reason, if these settings have been modified, offline, they will not be written during the file write operation.

RADIUS SETTINGS

The following are settings that need to be configured through EnerVista D&I Setup software, in order to set up communication with a RADIUS server. For configuring the RADIUS server itself, consult the RADIUS documentation. An example is provided, see *Communications Guide*.

Setting Name	Description	Min	Max	Default	Units	Minimum Permissions
Primary Radius IP Address	IP address of primary Radius server. Default value indicates no Primary Radius server is configured, and so Radius is disabled.	0.0.0.0	223.255.255.254	0.0.0.0	-	Administrator
Primary Authentication Port	Radius authentication port	1	65535	1812	-	Administrator
Vendor ID	An identifier that specifies Radius vendor specific attributes used with the protocol.	1	65535	Value that represents General Electric (2910)	-	Administrator
Radius Authentication Method	Authentication method used by Radius server. Currently fixed to EAP-TTLS.	EAP-TTLS	EAP-TTLS	EAP-TTLS	-	Administrator
Timeout	Timeout in seconds in between re-transmission requests	0	9999	10	sec	Administrator
Retries	Number of retries before giving up	0	9999	3	-	Administrator
Radius Authentication (Shared) Secret	Shared Secret used in authentication. It is only displayed as asterisks. This setting must meet the CyberSentry password requirements.	See password section for requirements	245 characters	N/A	-	Administrator
Confirm Radius Authentication (Shared) Secret	Confirmation of the shared secret. Only display as asterisks.	See password section for requirements	245 characters	N/A	-	Administrator

SECURITY EVENTS

The event recorder records the events described in the below table.

Event Record	Level	Description
FAILED_AUTH, ORIGIN, TIMESTAMP	Warning (4)	A failed authentication with time stamp in UTC time when it occurred.
USER_LOCKOUT, ORIGIN, TIMESTAMP:	Error (3)	The user lockout has occurred because of too many failed authentication attempts.
SETTING_CHG, ORIGIN, TIMESTAMP:	Notice (5)	An event to indicate setting change(s).
LOGIN, ORIGIN, TIMESTAMP:	Warning (4)	An event to indicate when a certain role logged in.
LOGOUT, ORIGIN, TIMESTAMP:	Warning (4)	An event to indicate when a certain role logged out or timed out.
RADIUS_UNREACH, ORIGIN, TIMESTAMP:	Critical (2)	RADIUS server is unreachable. Origin: RADIUS server IP address and port number.
CLEAR_EVENT_RECORDS, ORIGIN, TIMESTAMP:	Warning (4)	Clear event records command was issued.
CLEAR_TRANSIENT_RECORDS, ORIGIN, TIMESTAMP:	Notice (5)	Clear transient records command was issued.
CLEAR_FAULT_REPORTS, ORIGIN, TIMESTAMP:	Notice (5)	Clear fault reports command was issued.

FLEXLOGIC OPERANDS

The following operands are added for CyberSentry.

CyberSentry FlexLogic Operand	Description
AUTHENTICATION FAIL	Operand set for Failed Authentication self test and alarm
UNAUTH SETTING CHANGE ATTEMPT	Operand set for unauthorized setting change action
RADIUS SRV UNAVAILABLE	Operand set for RADIUS servers unavailable self test

5.6 COMMUNICATIONS

8-series relays have a two-stage communications capability. The base CPU supports the Modbus protocol through the Ethernet, USB, serial and WiFi ports. In addition, the base CPU also supports the IEC 103, DNP serial, DNP TCP/IP, and TFTP protocols. Once the communications module option is added to the base, the base Ethernet port becomes disabled but the two Ethernet ports on the communications module have enhanced communications capabilities such as IEC 61850 Ed.2, IEC 62439 parallel redundancy protocol (PRP) and IEEE 1588 Precision Time Protocol (PTP version 2). The communications CPU also supports the Modbus TCP, IEC 104, DNP TCP, TFTP, SFTP, and SNTP protocols.

5.6.1 GENERAL COMMUNICATIONS SETUP

Note:
The below settings are applied only to devices with IEC 61850 order codes.

MULTI-LEVEL CONTROL

Range: Disabled, Enabled

Default: Disabled

When set to `Enabled`, control authority from multiple levels (Bay, Station and Remote) are allowed simultaneously, based on Local/Remote status and status authority status. Otherwise only one level has the authority to control, based on Local/Remote status and status authority status.

IED LOCAL STATUS

Range: Off, Any FlexLogic operand

Default: Off

This selects an operand that indicates whether the IED is in Local or Remote mode. When the operand value is set, the IED is in Local mode and any commands from remote protocols (IEC 61850, DNP3, IEC 104 or 103, Modbus) are rejected.

5.6.2 MODBUS PROTOCOL

All Ethernet ports and serial communication ports support the Modbus protocol. The only exception is if the serial port has been configured for DNP or IEC 60870-5-103 operation (see descriptions below). This allows the EnerVista D&I Setup software (which is a Modbus master application) to communicate with the relay.

The relay implements a subset of the Modicon Modbus RTU serial communication standard. The Modbus protocol is hardware-independent. That is, the physical layer can be any of a variety of standard hardware configurations. This includes USB, RS485, fiber optics, etc. Modbus is a single master / multiple slave type of protocol suitable for a multi-drop configuration.

The relay is always a Modbus slave with a valid slave address range 1 to 254.

DATA FRAME FORMAT AND DATA RATE

One data frame of an asynchronous transmission to or from a relay typically consists of 1 start bit, 8 data bits, and 1 stop bit. This produces a 10-bit data frame. This is important for transmission through modems at high bit rates. Modbus protocol can be implemented at any standard communication speed. The relay supports operation at 9600, 19200, 38400, 57600, and 115200 bps baud rate. The USB interface supports Modbus TCP/IP.

FUNCTION CODE SUPPORTED

The following functions are supported:

- FUNCTION CODE 03H - Read Setpoints
- FUNCTION CODE 04H - Read Actual Values
- FUNCTION CODE 05H - Execute Operation
- FUNCTION CODE 06H - Store Single Setpoint
- FUNCTION CODE 07H - Read Device Status
- FUNCTION CODE 08H - Loopback Test
- FUNCTION CODE 10H - Store Multiple Setpoints
- FUNCTION CODE 42H - Group Settings Read
- FUNCTION CODE 43H - Group Settings Write

When a Modbus master such as the EnerVista D&I Setup software communicates with the relay over Ethernet, the relay slave address, TCP port number and IP address for the associated port must be configured and are also configured within the Master for this device. The default Modbus TCP port number is 502.

5.6.3 MODBUS CONFIGURABLE PARAMETERS

The following Modbus parameters are configurable:

Path:*Setpoints* > *Device* > *Communications* > *Modbus Protocol*

MODBUS SLAVE ADDRESS

Range: 1 to 254 in steps of 1

Default: 254

For the RS485 ports each 8 Series 889 must have a unique address from 1 to 254. Address 0 is the broadcast address to which all Modbus slave devices listen. Addresses do not have to be sequential, but no two devices can have the same address, otherwise conflicts resulting in errors occur. Generally, each device added to the link uses the next higher address starting at 1.

MODBUS TCP PORT NUMBER

Range: 1 to 65535 in steps of 1

Default: 502

The TCP port number used with Modbus over Ethernet. Note that the maximum number of simultaneous Modbus connections supported over Ethernet is three for an 8 Series 889 without the communications card and five for an 8 Series 889 with the communications card.

COMPATIBILITY

Range: Disabled, SR489, FlexMap

Default: Disabled

Compatibility mode changes the Modbus actual value registers to emulate an SR489 relay. The emulation supports typical actual value data for common data items.

Starting in version 2.90, choose FlexMap for SR489 support to include support for additional SR489 registers

See the *8 Series Protective Relay Communications guide* for the list.

Note:
When in compatibility mode the rear RS485 port and the rear Ethernet ports are not accessible via EnerVista D&I Setup software so it is not possible to change any settings, view actual values or retrieve records. When in compatibility mode the actual values supported can be read via the rear RS485 or rear Ethernet Ports using Modbus Master e.g. PLC or DCS. The front USB port should be used for connection and EnerVista D&I Setup software activities.

FLEXMAP FILE

Range: Up to 13 alphanumeric characters

Default: SR489XAFlexMap.000

The ***Flexmap File*** describes the translation from the Modbus memory map to the target Modbus memory map.

MODBUS 485 READ ACTUALS

Range: Function Code 03h, Function Code 04h

Default: Function Code 04h

The ***Modbus 485 Read Actuals*** setting configures the Function Code that the relay responds to from a Modbus Master when Actual Values are requested. Use this setting in scenarios where the Modbus Master can only communicate using Function Code 03h for requesting Actual Values.

Note:
This setting applies only to the RS485 connection.
When this setting is changed to Function Code 03h, retrieving configuration settings through the RS485 port is not possible.

MODBUS ACTIVITY TIMEOUT

Range: 0 to 3600 s in steps of 1 s

Default: 0 s

The ***Modbus Activity Timeout*** specifies the minimum time without Modbus communication. This timeout is used to declare the Modbus **Loss of Communication** state.

The Modbus state is always Active if the ***Modbus Activity Timeout*** is `0 s`.

MODBUS ERROR RESPONSES

The following exception response codes are implemented.

Error ID	Exception	Description
01	ILLEGAL FUNCTION	The function code transmitted is not one of the functions supported by the 8 Series 889.
02	ILLEGAL DATA ADDRESS	The address referenced in the data field transmitted by the master is not an allowable address for the 8 Series 889.
03	ILLEGAL DATA VALUE	The value referenced in the data field transmitted by the master is not within range for the selected data address.

5.6.4 RS485

On the rear, the relay is equipped with one RS485 serial communication port. The RS485 port has settings for baud rate and parity. It is important that these parameters agree with the settings used on the computer or other equipment connected to this port. A maximum of 32 relays can be daisy-chained and connected to a DCS, PLC or a PC using the RS485 port.

Path: ***Setpoints*** > ***Device*** > ***Communications*** > ***RS485***

BAUD RATE

Range: 9600, 19200, 38400, 57600, 115200

Default: 115200

PARITY

Range: None, Odd, Even

Default: None

PORT PROTOCOL

Range: Modbus, DNP 3.0, IEC 60870-5-103

Default: Modbus

5.6.5 WI-FI

Wi-Fi refers to Wireless Local Area Networks (WLANs) that are based on the 802.11 set of standards. WLANs provide Local Area Network (LAN) type of connectivity but without the need of cables, which makes them more convenient for use in limited spaces. The signal strength and its range is determined by the wireless device's antenna technology and standard, the best being IEEE 802.11n.

Wi-Fi defines two modes of operation, namely ad-hoc, used for small deployments, and infrastructure mode, which supports more robust types of security and better capabilities for centralized management. The infrastructure mode requires an Access Point (AP). Devices operating in this mode pass all data through the AP.

The integrated Wi-Fi module conforms to IEEE 802.11b/g/n standards. The devices operate in infrastructure mode. Security is optional, but enabled by default. We advise you to leave this switched on, as wireless traffic is very susceptible to cyber-attacks.

The security technology used is WPA2 (Wireless Protected Access version 2), based on the IEEE 802.11i standard for data encryption. WPA2 is a second version of WPA technology, designed to solve known security limitations found in one of the encryption algorithms used by WPA, namely TKIP (Temporal Key Integrity Protocol). WPA2 uses CCMP (Counter Mode with Cipher Block Chaining Message Authentication Code Protocol), which provides an enhanced data cryptographic encapsulation mechanism based on AES (Advanced Encryption Standard). CCMP makes WPA2 much stronger and secure than its predecessors, WPA and WEP.

Several forms of WPA2 security keys exist. The relay supports WPA2 PSK (Pre-Shared Key), which utilizes 64 hexadecimal digits. The key may actually be entered as a string of 64 hexadecimal digits or as a passphrase of 8 to 32 printable ASCII characters. For user convenience, the settings accept the key in the form of a passphrase. Internally the ASCII passphrase is used for deriving a 256-bit key.

The following are the Wi-Fi network settings. Only an Administrator has the rights to change them.

Path: *Setpoints* > *Device* > *Communications* > *Wi-Fi*

WiFi Enable

This setting switches Wi-Fi functionality on/off. By default Wi-Fi is enabled in the basic offering, but it is disabled in software options that offer CyberSentry.

WiFi IP Address / Subnet Mask

The default IP address is 192.168.0.x, where x is calculated as:

X = (modulo 242 of the last 3 digits of the serial number) + 12 Example: A unit has a serial number of MJ3A16000405, the default IP address would be 192.168.0.175 (where 405 mod 242 = 163 + 12 = 175).

This is to ensure uniqueness of the default IP address for all 8 Series devices present on one wireless network and it creates a usable address space from 192.168.0.12 to 192.168.0.253 for the devices.

Note:
From the remaining range of unicast addresses 192.168.0.1 to 192.168.0.253, at least two are going to be used for the AP and a laptop installed with the relevant software version, which will be used to configure the devices. The AP should be configured with the address 192.168.0.1 and mask 255.255.255.0 and have DHCP enabled with a DHCP range from 192.168.0.2 to 192.168.0.253. This allows laptops, iPads and any other devices to connect to the local network without the need to statically configure their own IP address and mask.

WiFi GWY IP Address

The setting specifies the address of the access point AP which the device uses for communicating over Wi-Fi.

WiFi Security

The setting enables Wi-Fi security. If set to “None”, there is no security and all traffic is open. By default WiFi Security is set to WPA2-PSK.

WiFi SSID

The SSID is the public name of a wireless network. All of the wireless devices on a WLAN must use the same SSID in order to communicate with each other. The default for the SSID is provided by the vendor with the shipment of any new device. We recommend that you modify this name as needed after initial startup, to ensure unique SSIDs if several WLANs are configured.

Note:
SSID broadcast should be disabled on AP. This provides some extra protection by requiring an SSID before connecting to the device and making it harder for casual outsiders looking for wireless networks to find the device and attempt to connect.

WiFi WPA2 Passphrase

The WPA2 Passphrase is used for generating the encryption key. The same passphrase must be set on AP and on all devices communicating on the same WLAN. The device supports a string of up to 14 printable ASCII characters. Internally a 256-bit key is calculated by applying the PBKDF2 key derivation function to this passphrase, using the SSID as the salt and 4096 iterations of HMAC-SHA1.

The devices are configured with a default passphrase, which is provided by the vendor with the shipment of any new device.

When choosing a new passphrase, the password complexity rules of CyberSentry must be used (see CyberSentry details in the relay Instruction manual).

This field is visible only if the security is set to WPA2-PSK.

Note:
Ideally the passphrase should be set through the software and not directly from the Keypad, where there are limitations in terms of space and types of characters supported. However, for convenience, the passcode setting is available from the Keypad as well.

WiFi Status

A Wi-Fi symbol is displayed in the caption area of the product front panel. The following table lists all possibilities for this icon:

Wi-Fi State	Wi-Fi Icon Color
Disabled	Icon is gray and crossed by a red line
Disconnected	Gray
Connecting	Yellow

Wi-Fi State	Wi-Fi Icon Color
Connected	Green

Wi-Fi Events

Event	Description
Wi-Fi Connected	This event is recorded to indicate a network connect.
Wi-Fi Disconnected	This event is recorded to indicate a network disconnect.

Note:
If the relay is in service mode and the settings are default a minor error is triggered.

5.6.6 WI-FI QUICK START PROCEDURE

The following provides the settings information and instructions to quickly setup Wi-Fi.

Required Equipment

- Relay with Wi-Fi functionality
- PC with Wi-Fi
- Access Point

Quick Start Procedure

1. The PC Wi-Fi Network Passphrase is provided with the relay
2. The Access Point settings are given in the table below.
3. Any relays in range are automatically connect to the configured Access Point.
4. Start EnerVista D&I Setup software on a PC and use the Discover function, all relays within range appear and are populated for initial configuration and commissioning.
5. Once the relay is configured, change the relay default Wi-Fi SSID and Passphrase settings before the relay goes into service.

Access Point Settings	
IP address:	192.168.0.1
Subnet Mask:	255.255.255.0
SSID:	same as entered on the PC (SSID provided with the relay)
Broadcast:	disabled
Security type:	WPA2-PSK (WPA2-Personal)
Encryption:	AES
Passphrase:	same as entered on the PC (Passphrase provided with the relay)
DHCP enabled:	range of 192.168.0.12 to 192.168.0.253

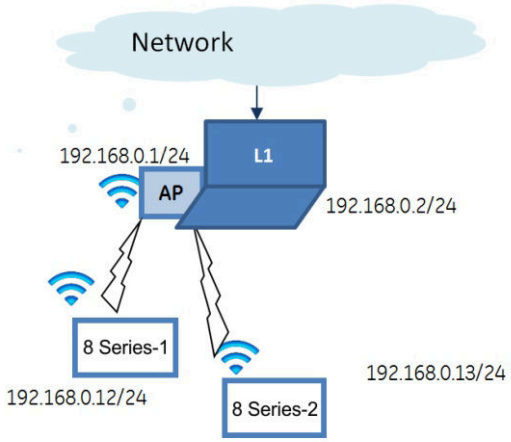

Figure 73: Example of Wi-Fi Deployment

5.6.7 USB

The USB parameters are as follows:

IP Address: 172.16.0.2

IP Subnet Mask: 255.255.255.0

IP GWY IP Address: 172.16.0.1

> *Note:*
> *Whenever the device is rebooted, the USB cable needs to be unplugged and plugged in again for proper communication to be established over USB.*

Connecting multiple relays over USB to a single PC is not possible because in the case of USB, the IP address of the device 172.16.0.2 is constant.

5.6.8 ETHERNET PORTS

The following communication offerings are available.

Base Offering

- Modes: 10/100 Mbps
- One Port: RJ45
- Protocol: Modbus TCP

Communications Card Option “C” - 2x Copper (RJ45) Ports

- Modes: 10/100 MB
- Two Ports: RJ45 (with this option both enabled ports are on the communications card; the Ethernet port located on the base CPU is disabled)
- Protocols: Modbus TCP, DNP 3.0, IEC 60870-5-104, IEC 61850 GOOSE, IEEE 1588, SNTP, IEC 62439-3 clause 4 (PRP)

Communications Card Option “S” - 2x ST Fiber Ports

- Modes: 100 MB
- Two Ports: ST (with this option both enabled ports are on the communications card; the Ethernet port located on the base CPU is disabled)
- Protocols: Modbus TCP, DNP 3.0, IEC 60870-5-104, IEC 61850 GOOSE, IEEE 1588, SNTP, IEC 62439-3 clause 4 (PRP)
- Wavelength: 1300 nm
- Typical link distance: 4 km

Note:
Always use Shielded Twisted Pair (STP) cable when connecting to RJ45 Ethernet ports

5.6.8.1 NETWORK SETTINGS MENU

This section describes the network settings menu. If the communications card is installed network port 1 is no longer available. When using more than one Ethernet port, configure each to belong to a different network or subnet using the IP addresses and mask, else communication becomes unpredictable when more than one port is configured to the same subnet.

Note:
*Use the softkeys and **Down/Up** key to enter an IP address. When entering an IP address you must press the **BACK** key first to switch between softkey mode and the **Down/Up** key mode.*

NETWORK 1, 4, 5, PRT1(4,5) IP ADDRESS

Range: Standard IPV4 Address format

Default: 169.254.3.3 (Port 1)

Default: 127.0.0.1 (Port 4, 5)

The setting sets the port’s IPV4 address in standard IPV4 format.

Note:
The setting is valid on Port 1 if the optional communications card is not present.
*The setting is valid on Port 5 if **Prt4 Operation** is set to* `Independent`*.*

PRT1(4,5) SUBNET IP MASK

Range: Standard IPV4 mask format

Default: 255.255.255.0 (Port 1)

Default: 0.0.0.0 (Port 4, 5)

This setting specifies the IPv4 mask associated with the corresponding port IP address.

PRT1 GWY ADDRESS

This setting sets the port's IPv4 GATEWAY address in standard IPv4 format.

This setting is only valid on port 1.

This setting is not present on port 4 and 5, which are available on the communications card.

Note:
The communications card supports a number of static routes and one default route, which is used instead of default gateways.

- The fiber optic ports support only 100 Mbps.
- Changes to the Ethernet communications settings take effect only after rebooting the relay.
- All Ethernet ports have flex operands associated with them. A failure of one of the Ethernet ports will trigger an event, a target message and the corresponding operand set.

PRT4 OPERATION

Range: Independent, LLA, PRP

Default: Independent

This setting determines the mode of operation for ports 4 and 5: `Independent`, `LLA` or `PRP`.

Independent operation: ports 4 and 5 operate independently with their own MAC and IP address.

LLA operation: Ports 4 and 5 use port 4's MAC and IP address settings while port 5 is in standby mode in that it does not actively communicate on the Ethernet network but monitors its link. If Port 4 is active and the link loss problem is detected, communications is switched to port 5 immediately. Port 5 is, in effect, acting as a redundant or backup link to the network for port 4.

LLA (Link Loss Alert)*:** is a proprietary feature supported by the fiber optic ports. When enabled on a fiber optic port, this feature is able to detect a failure of the fiber link. If ***Prt4 Operation is set to `LLA`, the detection of a link failure by this feature triggers the transfer of communications from port 4 to port 5. If LLA is enabled on a port with a non-fiber SFP, the target message `LLA not supported by Prt (4 or 5)` is displayed on the keypad and an event is logged.

Parallel Redundancy Protocol (PRP) operation: Ports 4 and 5 use the same MAC address and combine information at the link layer. It is intended to only be used if the two ports are connected to separate parallel LAN's. In this mode of operation, both ports cannot be connected to the same LAN. The receiving devices process the first frame received and discard the duplicate through a link redundancy entity (LRE) or similar service that operates below layer 2. Aside from LRE, PRP uses conventional Ethernet hardware but both ports must know they are in PRP. Ports of PRP devices operating with the same Internet Protocol (IP) addresses for traffic that uses IP Management protocols such as Address Resolution Protocol (ARP) must operate correctly.

Duplicate Discard mode: This is the normal setting for PRP operation and once set it allows the sender LRE to append a six-octet field that contains a sequence number, the Redundancy Control Trailer (RCT) to both frames it sends. The receiver LRE uses the sequence number of the RCT and the source MAC address to detect duplicates. It forwards only the first frame of a pair to its upper layers.

Note:
Always use Shielded Twisted Pair (STP) cable when connecting to RJ45 Ethernet ports

5.6.9 ROUTING

When the configuration card is present, a default route and a maximum number of 6 static routes can be configured. The default route is used as the last choice, if no other route towards a given destination is found.

Path: *Setpoints* > *Device* > *Communications* > *Routing* > *Default Route*

GATEWAY ADDRESS

Range: Standard IPV4 unicast address format (0.0.0.1 to 223.255.255.254)

Default: 127.0.0.1

This setting sets the gateway of the default route to be used by IP traffic sent from the relay, if no other route towards a given IP destination is found.

This setting is available only if the communications card is present.

Path: *Setpoints* > *Device* > *Communications* > *Routing* > *Static RT1 (2 to 6)*

RT1 (2,3,4,5,6) DESTINATION

Range: Standard IPV4 network address format (0.0.0.1 to 223.255.255.254)

Default: 127.0.0.1

This setting sets the destination IPv4 route. This setting is available only if the communications card is present.

RT1 (2,3,4,5,6) MASK

Range: Standard IPV4 network mask format

Default: 255.0.0.0

This setting sets the IP mask associated with the route. This setting is available only if the communications card is present.

RT1 (2,3,4,5,6) GATEWAY

Range: Standard IPV4 unicast address format (0.0.0.1 to 223.255.255.254)

Default: 127.0.0.1

This setting sets the destination IP route. This setting is available only if the communications card is present.

RULES FOR ADDING AND DELETING STATIC ROUTES

1. By default, the value of the destination field is 127.0.0.1 for all static routes (1 to 6). This is equivalent to saying that the static routes are not configured. When the destination address is 127.0.0.1, the mask and gateway must also be kept as default values.
2. By default, the value of the default route gateway address is 127.0.0.1. This means the default route is not configured.
3. Use any of the static network route entries numbered 1 to 6 to configure a static network route. Once a route destination is configured for any of the entries 1 to 6, that entry becomes a static route and it must meet all the rules listed in *Important Notes* below.
4. To configure the default route, enter a default gateway address. A default gateway address configured must be validated against Rule #5, the next rule.
5. Routes are deleted by replacing the route destination with the default address (127.0.0.1). When deleting a route, the mask and gateway must also be put back to their default values.
6. The default route is deleted by replacing the default gateway with the default value 127.0.0.1.

Note:
Host routes are not supported at present.
The route mask has IPv4 mask format. In binary this is a set of contiguous bits of 1 from left to right, followed by one or more contiguous bits of 0.
The route destination and mask must match. This can be verified by checking that RtDestination & RtMask == RtDestination
This is an example of a good configuration: RtDestination= 10.1.1.0; Rt Mask= 255.255.255.0
This is an example of a bad configuration: RtDestination = 10.1.1.1; Rt Mask= 255.255.255.0
The route destination must not be a connected network.
The route gateway must be on a connected network. This rule applies to the gateway address of the default route as well. This can be verified by checking that: RtGwy & Prt4Mask) == (Prt4IP & Prt4Mask) || (RtGwy & Prt5Mask) == (Prt5IP & Prt5Mask)

TARGETS

Wrong Route Config

Description: A route with mismatched destination and mask has been configured.

Message: Wrong route configuration.

Solution: Rectify the IP address and mask of the mis-configured route.

TOPOLOGY

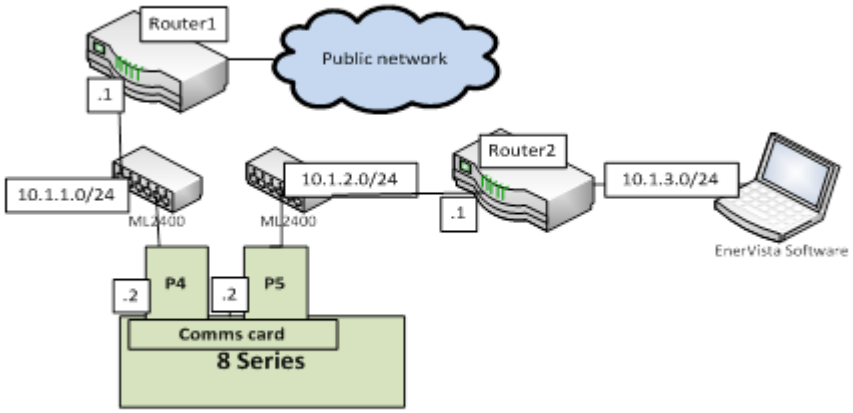

Figure 74: Topology Example

In the topology example above, the device is connected through the two Ethernet ports available on the communications card.

> *Note:*
> *Always use Shielded Twisted Pair (STP) cable when connecting to RJ45 Ethernet ports*

Port4 (IP address 10.1.1.2) connects to LAN 10.1.1.0/24 and to the Internet through Router1. Router 1 has an interface on 10.1.1.0/24 and the IP address of this interface is 10.1.1.1.

Port5 (IP address 10.1.2.2) connects to LAN 10.1.2.0/24 and to EnerVista D&I Setup software through Router 2. Router 2 has an interface on 10.1.2.0/24 and the IP address of this interface is 10.1.2.1.

Configuration

Network addresses:

PRT54IP ADDRESS = 10.1.1.2PRT4 SUBNET IP MASK = 255.255.255.0PRT5 IP ADDRESS = 10.1.2.2PRT5 SUBNET IP MASK = 255.255.255.0

Routing Settings:

IPV4 DEFAULT ROUTE: GATEWAY ADDRESS = 10.1.1.1

STATIC NETWORK ROUTE 1: RT1 DESTINATION = 10.1.3.0/24RT1 NET MASK = 255.255.255.0RT1 GATEWAY = 10.1.2.1

Behavior:

One static network route was added to the destination 10.1.3.0/24, where a laptop running EnerVista D&I Setup software is located. This static route uses a different gateway (10.1.2.1) than the default route. This gateway is the

address of Router 2, which is aware of destination 10.1.3.0 and is able to route packets coming from the device and destined to EnerVista D&I Setup software.

5.6.10 DNP PROTOCOL SETTINGS

Path: ***Setpoints*** > ***Device*** > ***Communications*** > ***DNP protocol***

DNP CHANNEL 1(2) PORT

Range: None, Network - TCP, Network - UDP

Default: None

The ***DNP Channel 1 Port*** and ***DNP Channel 2 Port*** settings select the communications port assigned to the DNP protocol for each channel. When set to `Network - TCP`, the DNP protocol can be used over TCP/IP on channels 1 or 2. When set to `Network - UDP`, the DNP protocol can be used over UDP/IP.

DNP ADDRESS

Range: 0 to 65519 in steps of 1

Default: 65519

The DNP address sets the DNP slave address. This number identifies the device on a DNP communications link. Each DNP slave must be assigned a unique address.

DNP CLIENT ADDRESS 1(2)

Range: standard IP address

Default: 0.0.0.0

The DNP Client Address settings can force the device to respond to a maximum of two specific DNP masters.

DNP TCP/UDP PORT 1(2)

Range: 1 to 65535 in steps of 1

Default: 2000

> *Note:*
> ***DNP Channel 1 Port*** *will take the* ***DNP TCP/UDP Port 1*** *and* ***DNP Client Address 1*** *to allow/reject connections. The same relation is used by channel 2.*

DNP UNSOL RESP FUNCTION

Range: Enabled, Disabled

Default: Disabled

This setting will take effect for Ethernet communication only if the main card is present or a comms card is available in the device. This setting enables/disables the unsolicited response functionality. It is disabled for RS485 applications since there is no collision avoidance mechanism.

DNP UNSOL RESP TIMEOUT

Range: 0 to 60 s in steps of 1

Default: 5 s

Sets the time the relay waits for a DNP master to confirm an unsolicited response.

UNSOL RESP MAX RETRIES

Range: 1 to 255 in steps of 1

Default: 10

Sets the number of times the device retransmits an unsolicited response without receiving confirmation from the master; a value of `255` allows infinite re-tries.

UNSOL RESP AT STARTUP

Range: Enabled, Disabled

Default: Disabled

When relay is rebooting, unsolicited responses work without an Enable message needed, but this is only possible once the Master resets the communications with the relay. This happens with both Reset Link or Class 1 request messages.

DNP UNSOL RESP DEST ADDRESS

Range: 1 to 65519 in steps of 1

Default: 1

Sets the DNP address to which all unsolicited responses are sent. The IP address to which unsolicited responses are sent is determined by the device from the current TCP connection or the most recent UDP message.

DNP TIME SYNC IIN PERIOD

Range: 1 to 10080 min. in steps of 1

Default: 1440 min

This setting determines how often the Need Time Internal Indication (IIN) bit is set by the device. Changing this time allows the DNP master to send time synchronization commands more or less often, as required.

> *Note:*
> *If the requirement for synchronization is more than a couple of seconds, consider synchronization via other means such as IRIG-B or 1588. Given network asymmetry, the consistency of the network latency, clock drift, and additional delays due to routers located between the client and the device all contribute error.*

DNP MESSAGE FRAGMENT SIZE

Range: 30 to 2048 in steps of 1

Default: 240

This setting determines the size, in bytes, at which message fragmentation occurs. Large fragment sizes allow for more efficient throughput; smaller fragment sizes cause more application layer confirmations to be necessary which can provide for more robust data transfer over noisy communication channels.

DNP OBJECT DEFAULT VARIATION SETTINGS

These settings allow selection of the DNP default variation number for object types 1, 2, 20, 21, 22, 23, 30, and 32. The default variation refers to the variation response when variation 0 is requested and/or in class 0, 1, 2, or 3 scans. The DNP binary outputs typically map one-to-one to IED data points. That is, each DNP binary output controls a single physical or virtual control point in an IED. In the 8 Series relay, DNP binary outputs are mapped to virtual inputs. See below for details

DNP OBJECT 1(2) DEFAULT VARIATION

Range: 1, 2

Default: 2

DNP OBJECT 20(22) DEFAULT VARIATION

Range: 1, 2, 5, 6

Default: 1

DNP OBJECT 21 DEFAULT VARIATION

Range: 1, 2, 9, 10

Default: 1

DNP OBJECT 23 DEFAULT VARIATION

Range: 1, 2, 5, 6

Default: 2

DNP OBJECT 30 DEFAULT VARIATION

Range: 1, 2, 3, 4, 5

Default: 1

TCP CONNECTION TIMEOUT

Range: 10 to 300 s in steps of 1

Default: 120 s

This setting specifies a time delay for the detection of dead network TCP connections. If there is no data traffic on a DNP TCP connection for greater than the time specified by this setting, the connection will be aborted.. This frees up the connection to be re-used by a client.

5.6.11 DNP AND IEC104 POINT LISTS

The menu path for the DNP/IEC104 point lists is shown below.

Path: ***Setpoints*** > ***Device*** > ***Communications*** > ***DNP/IEC104 Point Lists***

Binary Input/MSP Points

Analog Input/MME Points

Binary Outp/CSC/CDC Pnts

Binary input points (DNP) or MSP points (IEC 60870-5-104)

You can configure the binary inputs points for the DNP protocol, or the MSP points for IEC 60870-5-104 protocol to a maximum of 96 points. The data source for each point is user-programmable and can be configured by assigning FlexLogic operands. For a complete list, see Format Code FC142.

The menu path for the binary input points (DNP) or MSP points (IEC 60870-5-104) is shown below.

Path: ***Setpoints*** > ***Device*** > ***Communications*** > ***DNP/IEC104 Point Lists*** > ***Binary Input/MSP Points***

Point 0 Entry

...

Point 255 Entry

Analog input points (DNP) or MME points (IEC 60870-5-104)

You can configure up to 255 analog input points for the DNP or IEC 60870-5-104 protocols. The menu path for the analog input point (DNP) or MME points (IEC 60870-5-104) is shown below.

Path: ***Setpoints*** > ***Device*** > ***Communications*** > ***DNP/IEC104 Point Lists*** > ***Analog Input / MME Points***

Analog IP Point 0 Entry

Point 0 Scale Factor

Point 0 Deadband

DNP ANALOG INPUT POINT 0(255) SCALE FACTOR

Range: / 0.001, / 0.01, / 0.1, / 1, / 10, / 100, / 1000, / 10000, / 100000

Default: /1

These are numbers used to scale analog input point values. Each setting represents the scale factor for the analog input point. For example, if the ***DNP PHASE A VOLTAGE SCALE FACTOR*** setting is set to `/ 1000`, and the Phase A voltage is 72000 V, the Phase A voltage sent on to the relay is 72 V. The settings are useful when analog input values must be adjusted to fit within certain ranges in DNP masters.

> *Note:*
> *A scale factor of `/ 0.1` is equivalent to a multiplier of 10.*

DNP ANALOG INPUT POINT 0(255) DEADBAND

Range: 1 to 100000000 in steps of 1

Default: 30000

The setting is the threshold value to define the condition to trigger unsolicited responses containing analog input data. Each setting represents the default deadband value for the associated analog input. For example, to trigger unsolicited responses from the relay when phase A current changes by 15 A, the DNP Current Deadband for Phase A current should be set to `15`. Note that these settings are the deadband default values. DNP object 34 points can be used to change deadband values from the default for each individual DNP analog input point. Whenever power is removed and re-applied, the new deadbands are in effect.

Binary output points (DNP) or CSC/CDC points (IEC 60870-5-104)

You can configure the binary output points for the DNP protocol, or the CSC/CDC points for IEC 60870-5-104 protocol to a maximum of 16 points. The data source for each point is user-programmable and can be configured by assigning FlexLogic operands. The menu path for the binary output points (DNP) or CSC/CDC points (IEC 60870-5-104) is shown below.

Path: ***Setpoints*** > ***Device*** > ***Communications*** > ***DNP/IEC104 Point Lists*** > ***Binary Output / CSC/CDC Points***

Binary Output Point 0 ON

Binary Output Point 0 OFF

...

Binary Output Point 31 ON

Binary Output Point 31 OFF

> *Note:*
> *The DNP/IEC 60870-5-104 point lists always begin with point 0 and end at the first `Off` value. Since DNP / IEC 60870-5-104 point lists must be in one continuous block, any points assigned after the first `Off` point are ignored.*

BINARY INPUT POINTS

The DNP binary input data points are configured through the **DNP/IEC104 POINT LISTS BINARY INPUT/MSP POINTS** menu. When a freeze function is performed on a binary counter point, the frozen value is available in the corresponding frozen counter point.

- Static (Steady-State) Object Number: **1**
- Change Event Object Number: **2**
- Request Function Codes supported: **1 (read), 22 (assign class)**
- Static Variation reported when variation 0 requested: **2 (Binary Input with status), Configurable**
- Change Event Variation reported when variation 0 requested: **2 (Binary Input Change with Time), Configurable**
- Change Event Scan Rate: **8 times per power system cycle**
- Change Event Buffer Size: **1024**
- Default Class for All Points: **1**

POINT NAME/DESCRIPTION COUNTERS

The following details lists both Binary Counters (Object 20) and Frozen Counters (Object 21). When a freeze function is performed on a Binary Counter point, the frozen value is available in the corresponding Frozen Counter point. Digital Counter values are represented as 16 or 32-bit integers. The DNP 3.0 protocol defines counters to be unsigned integers. Care should be taken when interpreting negative counter values.

BINARY COUNTERS

- Static (Steady-State) Object Number: **20**
- Change Event Object Number: **22**
- Request Function Codes supported: **1 (read), 7 (freeze), 8 (freeze noack), 9 (freeze and clear), 10 (freeze and clear, noack), 22 (assign class)**
- Static Variation reported when variation 0 requested: **1 (32-Bit Binary Counter with Flag)**
- Change Event Variation reported when variation 0 requested: **1 (32-Bit Counter Change Event without time)**
- Change Event Buffer Size: **10**
- Default Class for all points: **3**

FROZEN COUNTERS

- Static (Steady-State) Object Number: **21**
- Change Event Object Number: **23**
- Request Function Codes supported: **1 (read)**
- Static Variation reported when variation 0 requested: **1 (32-Bit Frozen Counter with Flag)**
- Change Event Variation reported when variation 0 requested: **1 (32-Bit Counter Change Event without time)**
- Change Event Buffer Size: **10**
- Default Class for all points: **3**

BINARY AND FROZEN COUNTERS POINT INDEX NAME/DESCRIPTION

- 0 Digital Counter 1
- 1 Digital Counter 2
- 2 Digital Counter 3
- 3 Digital Counter 4
- 4 Digital Counter 5

- 5 Digital Counter 6
- 6 Digital Counter 7
- 7 Digital Counter 8
- 8 Digital Counter 9
- 9 Digital Counter 10
- 10 Digital Counter 11
- 11 Digital Counter 12
- 12 Digital Counter 13
- 13 Digital Counter 14
- 14 Digital Counter 15
- 15 Digital Counter 16

ANALOG INPUTS

It is important to note that 16-bit and 32-bit variations of analog inputs are transmitted through DNP as signed numbers. Even for analog input points that are not valid as negative values, the maximum positive representation is 32767 for 16-bit values and 2147483647 for 32-bit values. This is a DNP requirement. The deadbands for all Analog Input points are in the same units as the Analog Input quantity. For example, an Analog Input quantity measured in volts has a corresponding deadband in units of volts. Relay settings are available to set default deadband values according to data type. Deadbands for individual Analog Input Points can be set using DNP Object 34.

A default variation refers to the variation response when variation 0 is requested and/or in class 0, 1, 2, or 3 scans. The default variations for object types 1, 2, 20, 21, 22, 23, 30, and 32 are selected via relay settings. This optimizes the class 0 poll data size.

For static (non-change-event) objects, qualifiers 17 or 28 are only responded when a request is sent with qualifiers 17 or 28, respectively. Otherwise, static object requests sent with qualifiers 00, 01, 06, 07, or 08, are responded with qualifiers 00 or 01. For change event objects, qualifiers 17 or 28 are always responded.

Cold restarts are implemented the same as warm restarts – the relay is not restarted, but the DNP process is restarted.

5.6.12 IEC60870-5-104

The IEC 60870-5-104 communications protocol is supported on Ethernet ports 4 and 5 only. Setting changes become active after rebooting.

> *Note:*
> *Both DNP and IEC104 protocol can work at the same time, but consider that there is only one point map. So, the two protocols use the same data mapping, i.e., same point index and same point source.*
> *The relay supports up to two IEC104 client connections simultaneously.*

Path: ***Setpoints*** > ***Device*** > ***Communications*** > ***IEC 60870-5-104***

Channel 1 Port

Channel 2 Port

Common Address of ASDU

Client Address 1

Client Address 2

TCP Port Number 1

TCP Port Number 2

Cyclic Data Period

Object Info Addrs Bnry

Object Info Addrs Analog

Object Info Addrs Countrs

Object Info Addrs Cmnd

Object Info Analog Param

By default the Object Information Address for the different data is as follows:

M_SP (Single Points) = 1000

M_ME (Measured value) = 2000

M_IT (Integrated Totals) = 3000

C_SC or C_DC (Single or Double Command) = 4000

P_ME_NB (Parameter of measured value) = 5000

Each Measured value has a Parameter of measured value (P_ME_NB) associated to its threshold.

The IEC 60870-5-104 Deadbands settings are used to determine when to trigger spontaneous responses containing M_ME_NB_1 analog data. Each setting represents the threshold value for each M_ME_NB_1 analog point.

For example, to trigger spontaneous responses when a current value changes by 15 A, the ***Analog Point xx Deadband*** setting should be set to `15`. Note that these settings are the default values of the deadbands. P_ME_NB_1 (parameter of measured value, scaled value) points can be used to change threshold values, from the default, for each individual M_ME_NB_1 analog point. There are three ways to send the measurands to the Master station. The measurands are part of the General Group and Group 2, so when a general interrogation or group 2 interrogation takes place all the measurands are included in the response. Also, there is a cyclic data period setting where it is configured in the scan period to send the measurands to the Master. And the last way, is by sending spontaneously when a deadband overflow takes place. The IEC104 Channels sub-menu information is shown below.

Commands are executed over the Binary Outputs. The first 8 Binary Outputs are configured to receive Select/Operate Commands and the next 8 Binary Outputs are configured to receive Direct Execute Commands.

The ***IEC104 CHANNEL 1 PORT*** and ***IEC104 CHANNEL 2 PORT*** settings select the communications port assigned to the IEC104 protocol for each channel. When this setting is set to `Network - TCP`, the IEC104 protocol can be used over TCP/IP on channels 1 or 2. The ***IEC104 NETWORK CLIENT ADDRESS*** settings can force the relay to respond to a maximum of two specific IEC104 masters which own the configured IP Addresses. The settings in this sub-menu are shown below.

> *Note:*
> ***IEC104 CHANNEL 1 PORT*** *takes the* ***Port Number 1*** *and* ***Client Address 1*** *to allow or reject connections. The same method is used by channel 2.*

GROUPS OF DATA

The data is organized into groups in order to provide values when the controlling station requests them by a general or group interrogation.

Group 1 is set by the 96 Single Points (M_SP).

Group 2 is set by the 32 Measured values (M_ME).

Group 3 is set by the 32 Measured thresholds (P_ME).

These 96 Single Points and 32 Measured Values are also sent as a response to a General Interrogation.

The Integrated Totals (M_IT) has its own Counter Group 1, and it is sent as a response to a General Request Counter.

5.6.13 IEC60870-5-103

The point map for the 103 is different from the one shared by the IEC104 and DNP protocols. IEC 60870-5-103 serial communications protocol is supported on the rear RS485 port only.

The DNP, IEC 103 and Modbus cannot be enabled simultaneously. Only one instance of DNP 3.0, IEC 103 or Modbus can run on the RS485 serial port.

Path: *SETPOINTS* > *DEVICE* > *COMMUNICATIONS* > *IEC 60870-5-103 PROTOCOL*

IEC103 Common ASDU Addrs

Range: 0 to 254 in steps of 1

Default: 0

IEC103 Sync Timeout

Range: 0 to 1440 minutes in steps of 1 min

Default: 0 min

All binary inputs are configured from FlexLogic operands. For a complete list, see Format Code FC142.

Note:
Pay attention when configuring the function type and information number of the different points, because they must be unique. There is no mechanism in the EnerVista D&I Setup software or the front panel HMI to detect duplication of the information index.
The IEC 60870-5-103 point lists always begin with point `0` and end at the first `Off` value. Since IEC 60870-5-103 point lists must be in one continuous block, any points assigned after the first `Off` point are ignored.

5.6.14 IEC 61850

The optional communications processor supports both the IEC 61850 GOOSE and IEC 61850 MMS Server service as per IEC 61850 standard Ed. 2. The GOOSE messaging service provides the ability for the relay to Publish/Subscribe Digital Input and other element statuses and its Quality and Timestamp to/from other IEDs with supporting GOOSE messaging service. Server support allows remote control center, RTU/Gateway, local HMI or other client role devices access to the relay for monitoring and control. The configuration of IEC 61850 services is accomplished using the EnerVista D&I Setup software.

The IEC 61850 Server (i.e. the relay) reports information to the IEC 61850 Client, such as the Local HMI, RTU and Gateway. This information consists of logical device data, data sets, data control block, logical nodes and their data attributes.

Appendix B lists the implementation details of IEC 61850, including the logical nodes and number of instances for each that are supported..

Data Obj	data attribute	Type	FC	Name	Description
PhyHealth		ENS			This physical device's health
	stVal	ENUMERATED	ST		3 when ANY MAJOR ERROR ==On; 2 when ANY MINOR ERROR==On; 1 otherwise

5.6.14.1 IEC61850 CONFIGURATOR

The relay supports the IEC 61850 protocol, which is an order code option.

The IEC 61850 configurator is found in both the online and offline section of the EnerVista D&I Setup software for configuring the online and offline settings file respectively.

ONLINE SETTINGS FILE

Two options are available to configure the relay's online settings file.

1. Configuration
   - Configure the device through the Device Setup or Quick connect screen.
   - The IEC 61850 Configurator item is displayed after Maintenance.

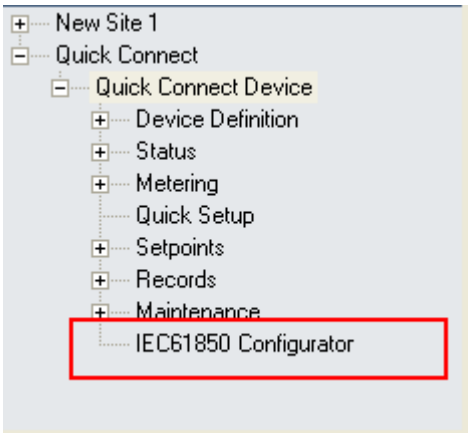

   - Launch the online IEC 61850 configurator screen, by double-clicking on **IEC61850 Configurator**.
   - Select the required settings from the different tab displays (in the configurator screen) to complete the IEC 61850 configuration.
2. Online right-click option
   - Select any online relay and right click on the selected item. More options become available for selection, as described below.

ADDITIONAL OPTIONS

Generate ICD file: The menu option generates a default ICD file with the respective order code option and saves the file to the path selected previously.

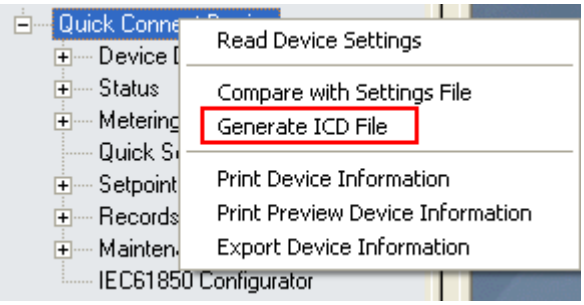

Read Device Settings: The menu option reads all the settings from the relay by TFTP and creates a file with extension *.CID. The created *.CID file consists of two sections. A private section where all non IEC 61850 settings are available, and a public section in which IEC 61850 related settings are implemented.

When creating a CID file using a 3rd party ICT/SCL tool, ensure the following:

- The order code in the CID file must match the device order code if writing the CID file directly into the relay. The ***Desc*** value in communication settings of the CID file must match the relay's order code.
- The maximum allowed services must be equal or below the specified limits as in ICD/CID.
- Configure Datasets only in LLN0 logical node.
- Creating new LD, LN, and communication-AP settings is not recommended.

OFFLINE SETTINGS FILE

The **Generate ICD File** menu option generates a default ICD file with the respective order code option and saves the file to the path selected previously.

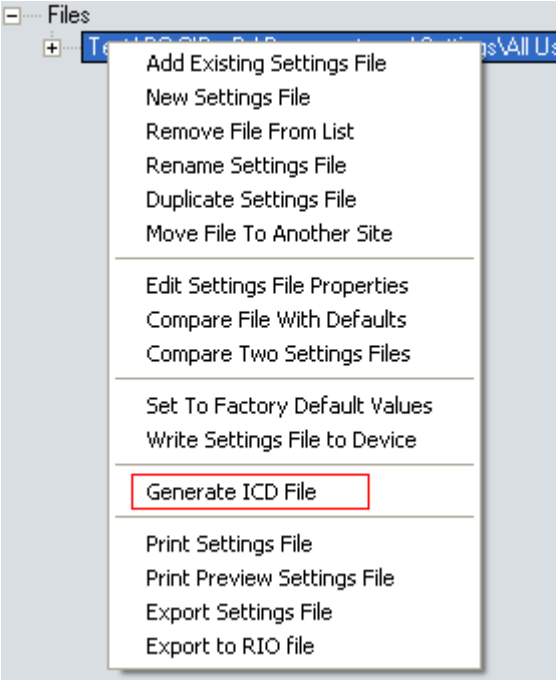

IEC 61850 CONFIGURATOR DETAILS

The IEC61850 Configurator allows editing of all sections of the IEC 61850 CID and ICD file. No other operations can be performed in the EnerVista D&I Setup software if the IEC61850 Configurator is open. Close the IEC 61850 session to perform other operations.

> *Note:*
> *When the IEC 61850 configuration is saved while online, the **DEVICE IN SERVICE** state (**Setpoints** > **Device** > **Installation**) switches to `Not Ready` for the duration of the upload. This ensures that all new settings are applied before the device is operational.*

The IEC61850 Configurator consists of five sections:

- ICD/CID
- Settings
- Reports
- GOOSE Reception
- GOOSE Transmission

5.6.15 REMOTE MODBUS DEVICE

The Remote Modbus Device describes a device within the same network as the relay and the poll mode of operation for retrieving the data. The relay acts as a Modbus Master and initiates Modbus requests to the Modbus slave at a defined poll interval or per trigger.

Path: ***Device*** > ***Communications*** > ***Remote Modbus Device*** > ***Device 1***

DEVICE NAME

Range: 13 Alphanumeric Characters

Default: BSG3

The Remote Modbus Device Name defaults to the Powell BriteSpot Thermal Monitoring device (BSG3).

DEVICE PROFILE

Range: 13 Alphanumeric Characters

Default: BSG3

The Remote Modbus Device default profile is for the Powell BriteSpot Thermal Monitoring device (BSG3). The 27 analog and 27 digital operands that are available in the device are supported and are pre-configured in the default settings file. The data defined for BSG3 are described in the *8 Series Protection Relay Platform Communications Guide*.

Other device profiles can be configured as described in the following section.

IP ADDRESS

Range: Standard IPV4 network address format

Default: 0.0.0.0

SLAVE ADDRESS

Range: 1 to 254 in steps of 1

Default: 254

MODBUS PORT

Range: 0 to 10000 in steps of 1

Default: 502

POLL RATE

Range: Off, 3 to 120 minutes in steps of 1

Default: 3 minutes

TRIGGER

Range: Any FlexLogic operand

Default: Off

5.6.15.1 REMOTE MODBUS DEVICE EDITOR

The Remote Modbus Device Editor allows customization of the generic Modbus device. Using this feature, data can be read from another device on the network. The data retrieved is mapped from Digital Points to FlexLogic operands, and from Analog Points to FlexAnalog values for use in relay logic operations.

To use the Remote Modbus Device Editor, follow these steps:

1. In the EnerVista D&I Setup software, navigate to ***Device*** > ***Communications*** > ***Remote Modbus Device*** > ***Device 1.***
2. To edit or replace the default BSG3 profile, click the **Profile Editor** button.

3. If required, create a new profile and add it to the profile list by clicking **New** and entering a name for the new profile when prompted.
   Click **OK** to create the new profile.
   - Profiles are stored in the directory C:\Users\Public\Documents\GE Power Management\8SeriesPC \RMD_Profiles for a default installation, or in a similar path corresponding to the EnerVista D&I Setup software installation path.
   - Profile files have the extension .8gmd, and are XML files.
4. Select an existing profile and click **Edit**.
   The profile opens in the Remote Modbus Device Profile Editor window, with all configured points listed.
5. To add a Digital Point enter a name in the Label column and an address in the Modbus Address column. The remaining columns fill with default values that can be edited as needed. Use the **Delete Row** button to delete entries.
   The following fields are available for each Digital Point:
   - **Label**: The name for the point, to a maximum of 13 characters
   - **Modbus Address (Hex)**: The Modbus Address for the point, in hexadecimal
   - **Read Function**: The Modbus function to be used for reading the point (function 3 or function 4).
   - **Enumeration Reference**: Selects the enumeration to apply to this point.
   - **Source Mask**: The bit from the source to use as a source for the point. For example, if the Source Mask is 16, bit 4 will be used. (Bits are numbered 0 to 15.)
   - **Mask**: The specific position in a 32 bit value to pack the bit read from the source. For example, if Mask is 8198, the source bit is placed in the 13th position. (Bits are numbered from 0 to 31.)
6. To manage the enumerations used by Digital Points, click the **Edit Enumeration** button. Enumerations are used to display user-friendly text for the true/false settings of each point. A maximum of 10 enumerations are permitted.
   Click each field to enter (or edit) the Name of the enumeration as shown in the list of Digital Points, along with the text to display for a False Value or a True Value. Use the **Delete Row** button to delete entries. All fields have a 13 character maximum.
   When done, click **OK** to save changes.
7. To add an Analog Point enter a name in the Label column and an address in the Modbus Address column. The remaining columns fill with default values that can be edited as needed. Use the **Delete Row** button to delete entries.
   When checked, the **Check for unique Modbus Addresses** checkbox does not allow duplicate addresses.
   The following fields are available for each Digital Point:
   - **Label**: The name for the point, to a maximum of 13 characters
   - **Modbus Address (Hex)**: The Modbus Address for the point, in hexadecimal
   - **Read Function**: The Modbus function to be used for reading the point (function 3 or function 4).
   - **Data Type**: SINT16 - Signed Integer (16-bit), UINT16 - Unsigned Integer (16-bit), SINT32 - Signed Long (32 -bit), UINT32 - Unsigned Long (32-bit), FLOAT - IEED Floating Point Number (32-bit).
   - **Multiplier**: The multiplier to apply to the read data.
   - **Decimals**: The number of decimal places to add to the read data. For example, a Decimal entry of 2 results in dividing the read data by 10*10=100.
   - **Unit**: The units associated with this value, to a maximum of 6 characters.
8. To select a profile, navigate to ***Device*** > ***Communications*** > ***Remote Modbus Device*** > ***Device 1.*** Under ***Device Profile***, a profile can be selected from the drop-down list.
   Click **Save** to save your changes. If you are working online, a new CID file will be created and sent to the relay.

Note:
*When a new CID file is uploaded, the **DEVICE IN SERVICE** state (**Setpoints** > **Device** > **Installation**) switches to* `Not Ready` *for the duration of the upload.*

5.6.16 SNMP

The Simple Network Management Protocol (SNMP) is a network protocol designed to manage devices in an IP network.The SNMP system consists of an agent, a manager and the communication protocol between agent and manager. 8-series relays implement the SNMP agent functionality to provide SNMP services to the SNMP manager. The SNMP manager is the client and is not in the scope of this specification.

SNMP implementation uses UDP as the transport protocol. The SNMP agent running in the device, uses port 161 to process SNMP manager's request. For the SNMP agent to report the trap messages, SNMP manager uses port 162. SNMPv2c and SNMPv3 both use UDP and the same port. SNMPv2c provides a security mechanism via the use of a community name in plain text. An SNMP Read-Only Community String is implemented in the device, which is like a user id or password that is sent along with each SNMP Get-Request. SNMPv3 uses User-based Security Model (USM) and provides security via authentication and privacy. SNMPv3 uses HMAC-MD5-96 and HMAC-SHA-96 as the authentication protocols and uses Cipher Block Chaining Data Encryption Standard (CBC-DES) symmetric encryption protocol as the privacy protocol.

SNMP Protocol Operations	Supported by product?
GET REQUEST	YES
GET NEXT REQUEST	YES
GET RESPONSE	YES
SET REQUEST	NO
TRAP	YES
GETBULK REQUEST	YES
INFORM	NO

Note:
A full list of supported SNMP services are listed in RFC1905 for SNMPv2c and RFC3416 for SNMPv3.

Path: *Device* > *Communications* > *SNMP*

SNMP FUNCTION

Range: Disabled, Enabled

Default: Disabled

This setting enables and disables the SNMP functionality. When set to Disabled, SNMP services are disabled. When set to enabled, SNMP services are enabled and MIBs are reported to SNMP client.

SNMP VERSION

Range: V3, V2C

Default: V3

This setting specifies the SNMP version to be used.

TRAP DEST. IP1

Range: 0.0.0.0 to 223.255.255.254 in steps of 1

Default: 0.0.0.0

This is the Trap destination IP for the SNMP interface, which needs to be set to the SNMP manager IP address. Setting this cell to 0.0.0.0 disables the Trap interface.

TRAP DEST. IP2

Range: 0.0.0.0 to 223.255.255.254 in steps of 1

Default: 0.0.0.0

This is the Trap destination IP for the SNMP interface, which needs to be set to the SNMP manager IP address. Setting this cell to 0.0.0.0 disables the Trap interface.

COMMUNITY NAME

Range: 8 ACSII characters

Default: AAAAAAAA

This is the SNMP v2c community name setting, used for authentication between the SNMP manager and the relay. The community name must be the same in both the SNMP Manager and the IED.

USER NAME

Range: 16 ACSII characters

Default: ReadOnlyUserName

This setting is the SNMP v3 user name.

SECURITY LEVEL

Range: NoAuthNoPriv, AuthNoPriv, AuthPriv

Default: AuthNoPriv

This represents the SNMP v3 security level. The levels of security are defined by the SNMP standard: 0 - Without authentication and without privacy (NoAuthNoPriv) 1 - With authentication but without privacy (AuthNoPriv) 2 - With authentication and with privacy (AuthPriv) Authentication is used to check the identity of users. Privacy allows for encryption of SNMP messages.

AUTH PROTOCOL

Range: HMAC-MD5-96, HMAC-SHA-96

Default: HMAC-MD5-96

This is the SNMP v3 Authentication Protocol, which sets the hash-based message authentication code function used for the authentication of messages. MD5 - Message Digest implementationSHA - Secure Hash Algorithm implementationSHA is considered cryptographically stronger than MD5 but takes a longer time to compute. Both implementations are considered secure. The SNMP Manager and the IED must use the same Authentication Protocol.

AUTH PASSWORD

Range: 8 ACSII characters

Default: AAAAAAAA

The setting used for the SNMP v3 Authentication Password.

ENCRYPT PROTOCOL

Range: CBC-DES

Default: CBC-DES

This is the SNMP v3 encryption protocol, which is a read-only setting.

ENCRYPT PASSWORD

Range: 8 ACSII characters

Default: BBBBBBBB

This is the SNMP v3 encryption protocol, which is a read-only setting.

5.6.16.1 SNMP MIB

SNMP uses a Management Information Base (MIB), which contains information about parameters to supervise. The MIB format is a tree structure, with each node in the tree identified by a numerical Object Identifier (OID). Each OID identifies a variable that can be read using SNMP with the appropriate software. The information in the MIB is standardized. Each device in a network (workstation, server, router, bridge, etc.) maintains a MIB that reflects the status of the managed resources on that system, such as the version of the software running on the device, the IP address assigned to a port or interface, the amount of free hard drive space, or the number of open files. The MIB does not contain static data, but is instead an object-oriented, dynamic database that provides a logical collection of managed object definitions. The MIB defines the data type of each managed object and describes the object.The following table lists all the MIB points and the data sources mapping. The data source mapping may differ between products.

Address				Name	Trigger Map
1.3.6.1.4.1.13248.				OID Prefix	
	1			8 Series	
		1		System Data	
			1	Model Number	No
			2	Serial Number	No
			3	Software Revision	No
			4	Frequency	No
		2		Date and Time	
			1	Date Time	No
			2	IRIG-B Status	Yes
			3	Active Sync Source	Yes
			5	SNTP Server 1	No
			6	SNTP Server 2	No
			7	SNTP Status	Yes
			8	PTP Status	Yes
		3		System Alarms	
			1	Settings File Rejected	Yes
			2	Major Error	Yes
			3	Minor Error	Yes
			4	Port 4 Fails	Yes
			5	Port 5 Fails	Yes
			6	SNTP Failure	Yes
			7	PTP Failure	Yes
			8	IRIG-B Failure	Yes
			9	Device Out Of Service	Yes
		4		Device Mode	

Address				Name	Trigger Map
			1	IED Mod/Beh	Yes
			2	Simulation Mode of Subscription	Yes

SNMPv3 SNMP-USER-BASED-SM-MIB

When the SNMP version is set to **V3**, SNMP client can access **MIB SNMP-USER-BASED-SM-MIB** as defined in RFC3414. When the version is set to **V2C**, this MIB is not accessible. SNMPv3 must implement this MIB to satisfy USM conformance statement if SNMPv3 adopts USM as its security model. The following table shows the SNMP user-based security model MIB.

Address						Name	Trigger Map
1.3.6.1.6.3.15						snmpUsmMIB	
	1					usmMIBObjects	
		1				usmStats	
			1			usmStatsUnsupportedSecLevels	No
			2			usmStatsNotInTimeWindows	No
			3			usmStatsUnknownUserNames	No
			4			usmStatsUnknownEngineIDs	No
			5			usmStatsWrongDigests	No
			6			usmStatsDecryptionErrors	No
		2				usmUser	
			1			usmUserSpinLock	No
			2			usmUserTable	
				1		usmUserEntry	
					1	usmUserEngineID	No
					2	usmUserName	No
					3	usmUserSecurityName	No
					4	usmUserCloneFrom	No
					5	usmUserAuthProtocol	No
					6	usmUserAuthKeyChange	No
					7	usmUserOwnAuthKeyChange	No
					8	usmUserPrivProtocol	No
					9	usmUserPrivKeyChange	No
					10	usmUserOwnPrivKeyChange	No
					11	usmUserPublic	No
					12	usmUserStorageType	No
					13	usmUserStatus	No

The below table shows the SNMP MIB for PRP:

Address												Name
0												ITU
	1											ISO
		0										Standard
			62439									IECHighavailibility
				3								PRP
					1							linkRedundancyEntityObjects
						0						lreConfiguration
							0					lreConfigurationGeneralGroup
								1				lreManufacturerName
								2				lreInterfaceCount
							1					lreConfigurationInterfaceGroup
								0				lreConfigurationInterfaces
									1			lreInterfaceConfigTable
										1		lreInterfaceConfigEntry
											1	lreInterfaceConfigIndex
											2	lreRowStatus
											3	lreNodeType
											4	lreNodeName
											5	lreVersionName
											6	lreMacAddressA
											7	lreMacAddressB
											8	lreAdapterAdminStateA
											9	lreAdapterAdminStateB
											10	lreLinkStatusA
											11	lreLinkStatusB
											12	lreDuplicateDiscard
											13	lreTransparentReception
											14	lreHsrLREMode
											15	lreSwitchingEndNode
											16	lreRedBoxIdentity
											17	lreSanA
											18	lreSanB
											19	lreEvaluateSupervision
											20	lreNodesTableClear
											21	lreProxyNodeTableClear
						1						lreStatistics

Address												Name
							1					lreStatisticsInterfaceGroup
								0				lreStatisticsInterfaces
									1			lreInterfaceStatsTable
											1	lreInterfaceStatsIndex
											2	lreCntTotalSentA
											3	lreCntTotalSentB
											4	lreCntErrWrongLANA
											5	lreCntErrWrongLANB
											6	lreCntReceivedA
											7	lreCntReceivedB
											8	lreCntErrorsA
											9	lreCntErrorsB
											10	lreCntNodes
											11	lreOwnRxCntA
											12	lreOwnRxCntB
									3			lreProxyNodeTable
										1		lreProxyNodeEntry
											1	reProxyNodeIndex
											2	reProxyNodeMacAddress

5.7 TRANSIENT RECORDER

The Transient Recorder contains waveforms captured at the same sampling rate as the other relay data at the point of trigger. By default, data is captured for all AC current and voltage inputs available on the relay as ordered. Transient record is generated upon change of state of at least one of the assigned triggers: ***Trigger Source***, ***Trigger on Any Pickup***, ***Trigger on Any Operate***, ***Trigger on Alarm***, or ***Trigger on Trip***.

The number of cycles captured in a single transient record varies based on the number of records, sample rate, and the number of selected channels. There is a fixed amount of data storage for the Transient Recorder: the more data captured, the less the number of cycles captured per record.

Path: ***Setpoints*** > ***Device*** > ***Transient Recorder***

NUMBER OF RECORDS

Range: 1 to 16 in steps of 1

Default: 5

The selection from the range defines the desired number of records.

SAMPLES PER CYCLE

Range: 8/c, 16/c, 32/c, 64/c, 128/c

Default: 32/c

This setpoint provides a selection of samples-per-cycle for representing the waveform. The waveform records can be viewed using the EnerVista D&I Setup software software.

TRIGGER MODE

Range: Overwrite, Protected

Default: Overwrite

When `Overwrite` setting is selected, the new records overwrite the old ones, meaning the relay will always keep the newest records as per the selected number of records. In `Protected` mode, the relay will keep the number of records corresponding to the selected number of records, without saving further records that are beyond the selected number of records.

TRIGGER POSITION

Range: 0 to 100% in steps of 1%

Default: 20%

This setting indicates the location of the trigger with respect to the selected length of record. For example at 20% selected trigger position, the length of each record will be split on 20% pre-trigger data, and 80% post-trigger data.

TRIGGER SOURCE:

Range: Off, Any FlexLogic operand

Default: Off

The trigger source can be any digital input: an operand from the list of FlexLogic operands, a contact input, a contact output, a virtual input or output, or a remote input or output.

TRIGGER ON ANY PICKUP

Range: On, Off

Default: Off

Selection of `On` enables triggering of the recorder upon pickup condition detected by any of the protection or control elements.

TRIGGER ON ANY OPERATE

Range: On, Off

Default: Off

Selection of `On` enables triggering of the recorder upon operate state of any of the enabled protection or control elements.

TRIGGER ON TRIP

Range: On, Off

Default: Off

Selecting the `On` setting enables triggering of the recorder when any of the protection elements configured as a `Trip` function operates, or the state of the operand assigned to operate the #1 Trip output relay changes to High.

TRIGGER ON ALARM

Range: On, Off

Default: Off

Selecting `On` setting enables triggering of the recorder when any of the protection elements configured as `Alarm`, or `Latched Alarm` function operates, or the state of the operand assigned to trigger the Alarm LED changes to High.

DIGITAL INPUT 1 to 64

Range: Off, Any FlexLogic operand

Default: Off

ANALOG INPUT 1 to 16

Range: Off, Any FlexLogic analog parameter

Default: Off

Note:
A consecutive transient record cannot be triggered until the first record has been completed.

5.8 DATA LOGGER

The data logger samples and records up to 16 analog parameters at a configured rate. All data is stored in non-volatile memory, where the information is retained upon a relay control power loss.

The data logger can be configured with a few channels over a long period of time, or with larger number of channels for a shorter period of time. The relay automatically partitions the available memory between the channels in use.

The selection of the rate for logging data also affects the duration of recorded data. The data logger has longer duration for sampling rates at longer periods of time (i.e. 1 minute, 30 minutes, 1 hour), as compared to sampling rates at short periods (i.e. per cycle, or per second).

The recorded data can be downloaded to EnerVista D&I Setup software and displayed with parameters on the vertical axis and time on the horizontal axis.

> *Note:*
> *If data is not available for the entire duration of pre-trigger, the trigger position will be based on available pre-trigger.*

Path: ***Setpoints*** > ***Device*** > ***Data Logger***

FUNCTION

Range: Disabled, Continuous, Triggered

Default: Continuous

This setting configures the mode in which the data logger operates. When set to `Continuous`, the data logger actively records any configured channels at the rate defined in the Data Logger Rate setting. The data logger is idle in this mode if no channels are configured. When set to `Triggered`, the data logger begins to record any configured channels at the instance of the rising edge of the trigger (FlexLogic operand). The data logger ignores all subsequent triggers and continues to record data until the active record is full. Once the data logger is full, capturing of data stops until it is cleared.

Clear Data Logger

Once the data logger is full, a Clear Data Logger command is required to clear the data logger record, before a new record can be started. Performing the Clear Data Logger command also stops the current record and resets the data logger to be ready for the next trigger. The Clear Data Logger command is located at ***Setpoints*** > ***Records*** > ***Clear Records***. The Data Logger Storage Capacity table below shows an example of the dependency of the data logger storage capacity with respect to the selected number of channels, and the selected rate (time interval) at which the logged values are taken. The Data Logger buffer space can be monitored to produce an alarm when the logged data occupies 80% of the data logger storage space. Target message, and operand Data Logger ALRM is generated at this time.

TRIGGER

Range: Off, Any FlexLogic operand

Default: Off

This setting selects the signal used to trigger the start of a new data logger record. Any FlexLogic operand can be used as a trigger source. The Triggered setting only applies when the Data Logger Function is set to “Triggered”.

TRIGGER POSITION

Range: 0 to 50% steps of 1%

Default: 20%

This setpoint defines the percentage of buffer space that is used for recording pre-trigger samples.

RATE

Range: 1 cycle, 1 second, 30 seconds, 1 minute, 15 minutes, 30 minutes, 1 hour, 6 hours, 8 hours, 12 hours, 24 hours

Default: 1 minute

This setting selects the time interval at which the actual value is recorded.

CHANNEL 1(16) SOURCE

Range: Off, Any FlexAnalog parameter

Default: Off

This setpoint selects the metering analog value that is to be recorded in Channel 1(16) of the data log. The parameters available in a given relay are dependent on: the type of relay, the type and number of CT/VT hardware installed, and the type and number of Analog Inputs hardware installed. Upon startup, the relay automatically prepares the parameter list.

CHANNEL 1(16) MODE

Default: Sample

Range: Sample, Min, Max, Mean

This setpoint defines the type of sample to be logged in the data logger record with respect to the selected rate, i.e the time interval selected under the setpoint ***Rate***.

While enabled the Data Logger executes every protection pass and each of the four modes —`Sample`, `Max`, `Min` or `Mean`. The FlexAnalog values are updated at protection-pass rate:

In `Sample` mode the data logger records the FlexAnalog value updated in the first protection-pass from the time interval selected under setpoint ***Rate***.

In `Max` mode the data logger records the maximum protection pass value of the selected FlexAnalog parameter from all protection pass values from the time interval selected under setpoint ***Rate***.

In `Min` mode the data logger records the minimum protection pass value of the selected FlexAnalog parameter from all protection pass values from the time interval selected under setpoint ***Rate***.

In `Mean` mode, the data logger records the average value among all the values at protection-pass rate, from the time interval selected under setpoint ***Rate***.

The mean (average) is calculated simply using the well known ratio between the sum of all the values and their number over the time interval.

Sampling Rate [sec]		Number of Channels	Time-Window covered			
			[sec]	[min]	[hour]	[day]
1 cycle	50Hz	1	1310.7	21.8	0.4	0.0
		8	546.1	9.1	0.2	0.0
		16	327.7	5.5	0.1	0.0
	60Hz	1	1092.3	18.2	0.3	0.0
		8	455.1	7.6	0.1	0.0
		16	273.1	4.6	0.1	0.0
1		1	65536.0	1092.3	18.2	0.8
		8	27306.0	455.1	7.6	0.3
		16	16384.0	273.1	4.6	0.2
30		1	1966080.0	32768.0	546.1	22.8
		8	819180.0	13653.0	227.6	9.5
		16	491520.0	8192.0	136.5	5.7
60		1	3932160.0	65536.0	1092.3	45.5
		8	1638360.0	27306.0	455.1	19.0
		16	983040.0	16384.0	273.1	11.4
900		1	58982400.0	983040.0	16384.0	682.7
		8	24575400.0	409590.0	6826.5	284.4
		16	14745600.0	245760.0	4096.0	170.7
1800		1	117964800.0	1966080.0	32768.0	1365.3
		8	49150800.0	819180.0	13653.0	568.9
		16	29491200.0	491520.0	8192.0	341.3
3600		1	235929600.0	3932160.0	65536.0	2730.7
		8	98301600.0	1638360.0	27306.0	1137.8
		16	58982400.0	983040.0	16384.0	682.7

Figure 75: Data Logger Storage Capacity

5.9 FAULT REPORTS

The relay supports up to 15 fault reports. The trigger conditions and the analog quantities to be stored are entered in this menu.

When enabled, this function monitors the pre-fault trigger. The pre-fault data are stored in the memory for prospective creation of the fault report on the rising edge of the pre-fault trigger. The element waits for the fault trigger as long as the pre-fault trigger is asserted, but not shorter than 1 second. When the fault trigger occurs, the fault data is stored and the complete report is created. If the fault trigger does not occur within 1 second after the pre-fault trigger drops out, the element resets and no record is created.

The user-programmable fault report contains a header with the following information:

- Relay model
- Device name
- Firmware revision
- Date and time of trigger
- Name of pre-fault trigger (FlexLogic operand)
- Name of Fault trigger (FlexLogic operand)
- Active setting group at the time of pre-fault trigger
- Active setting group at the time of fault trigger.

The fault report continues with the following information:

- All current and voltage phasors (one cycle after the fault trigger)
- Pre-fault values for all programmed analog channels (one cycle before pre-fault trigger)
- Fault values of all programmed analog channels (one cycle after the fault trigger)

Each Fault Report created can be saved as a text file using the Enervista software. The file names are numbered sequentially to show which file is older than the other.

The trigger can be any FlexLogic operand, but in most applications it is expected to be the same operand, usually a virtual output, that is used to drive an output relay to trip a breaker. A Fault Rpt Trig event is automatically created when the report is triggered.

If a number of protection elements, such as overcurrent elements, are ORed to create a fault report trigger, the first operation of any element causing the OR gate output to become high triggers the fault report. However, If other elements operate during the fault and the first operated element has not been reset (the OR gate output is still high), the fault report is not triggered again. Considering the reset time of protection elements, there is very little chance that fault report can be triggered twice in this manner. As the fault report must capture a usable amount of pre and post-fault data, it cannot be triggered faster than every 20 ms.

The fault report stores data, in non-volatile memory, pertinent to an event when triggered. Each fault report is stored as a file to a maximum capacity of fifteen files. A sixteenth trigger overwrites the oldest file.

The Enervista software is required to view all captured data. The relay faceplate display can be used to view the date and time of trigger, the fault type and the distance location of the fault.

Path: ***Setpoints*** > ***Device*** > ***Fault Report***

FUNCTION

Range: Disabled, Enabled

Default: Disabled

PRE-FAULT TRIGGER

Range: Off, Any FlexLogic operand

Default: Off

This setpoint specifies the FlexLogic operand to capture the pre-fault data. The rising edge of this operand stores one cycle-old data for subsequent reporting. The element waits for the fault trigger to actually create a record as long as the operand selected as Pre-Fault Trigger is On. If the operand remains Off for 1 second, the element resets and no record is created.

FAULT TRIGGER

Range: Off, Any FlexLogic operand

Default: Off

This setpoint specifies the FlexLogic operand to capture the fault data. The rising edge of this operand stores the data as fault data and results in a new report. The trigger (not the pre-fault trigger) controls the date and time of the report. The distance to fault calculations are initiated by this signal.

ANALOG CHANNELS 1 to 32

These settings specify an actual value such as voltage or current magnitude, true RMS, phase angle, frequency, temperature, etc., to be stored should the report be created. Up to 32 analog channels can be configured.

5.10 EVENT DATA

The Event Data feature stores 64 FlexAnalog quantities each time an event occurs. The relay is able to capture a maximum of 1024 records. The Event Data behavior matches that of the Event Recorder. This is a Platform feature and a Basic option so it has no dependencies.

There is no enabling or disabling of the feature. It is always on.

When changes are made to the Event Data settings, the Event data is cleared and the Snapshot.txt file is deleted. The Event Record remains as is and is not cleared.

Path: ***Setpoints*** > ***Device*** > ***Event Data***

PARAMETER 1 to 64

Range: Off, any FlexAnalog Parameter

Default: Off

5.11 FLEX STATES

The Flex State feature provides a mechanism where any of 256 selected FlexLogic operand states or any inputs can be used for efficient monitoring.

The feature allows user-customized access to the FlexLogic operand states in the relay. The state bits are packed so that 16 states may be read out in a single Modbus register. The state bits can be configured so that all of the states which are of interest are available in a minimum number of Modbus registers.

Path: ***Setpoints*** > ***Device*** > ***Flex States***

PARAMETER 1 (to 256)

Range: Off, Any FlexLogic operand

Default: Off

5.12 FRONT PANEL

The relay provides an easy to use faceplate for menu navigation through five navigation pushbuttons and high quality graphical display. Conveniently located on the panel is a group of seven pushbuttons for **Up**/**Down** value selection, **Enter**, **Home**, **Escape**, **Help**, and **Reset** functions. The faceplate includes three programmable function pushbuttons with LEDs.

The ten pushbutton membrane faceplate (available for 850 only for hardware versions A and B, and all models for hardware version C) includes ten programmable function pushbuttons and twelve programmable LEDs.

> *Note:*
> *The USB port on the Front Panel is intended for connection to a portable PC.*

5.12.1 PROGRAMMABLE LEDS

Path: ***Setpoints*** > ***Device > Front panel >Programmable LEDs***

LED “IN SERVICE”

Range: Off, Any FlexLogic operand

Default: In-Service

This setpoint requires assigning of FlexLogic operand to turn on the LED “In Service” This LED indicates that control power is applied, all monitored inputs, outputs, and internal systems are OK, and that the device has been programmed.

LED “TRIP”

Range: Off, Any FlexLogic operand

Default: Any Trip

The setpoint requires a FlexLogic operand to be assigned in order to turn on the **TRIP** LED, when triggered. This indicator always latches, and a reset command must be initiated to allow the latch to be reset.

The LED can be also triggered by the operation of a protection, control, or monitoring element with its function selected as `Trip`.

LED “ALARM”

Range: Off, Any FlexLogic operand

Default: Any Alarm

The setpoint requires a FlexLogic operand to be assigned in order to turn on the **ALARM** LED, when triggered. The indicator is a self-reset indicator, unless it is initiated from a protection, control, or monitoring element whose function is selected as `Latched Alarm`. Resetting the Latched Alarm LED is performed by initiating a Reset command.

LED “PICKUP”

Range: Off, Any FlexLogic operand

Default: Any Pickup

The setpoint requires a FlexLogic operand to be assigned in order to turn on the **PICKUP** LED , when triggered. The indicator is a self-rest indicator and will turn off if the condition evolves into a fault or the measured parameter drops below the pickup level.

LED x NAME

Range: Up to 13 alphanumeric characters

Default: LED 5

The setpoint is used to select the LED name by choosing up to 13 alphanumeric characters.

LED x COLOR

Range: Off, Red, Green, Orange

Default: Orange

The setpoint selects the color of the LED. Three colors are available for selection: `Red`, `Green`, and `Orange`.

> *Note:*
> *This setting is not available for LEDs 18 to 24.*

LED x TRIGGER

Range: Off, Any FlexLogic operands

Default: Testing On

This setpoint requires the assigning of a FlexLogic operand to trigger the selected LED upon operation.

LED x TYPE

Range: Self-reset, Latched

Default: Testing On

The setpoint defines the type of LED indication as either `Self-Reset` (the LED resets after the FlexLogic operand drops out), or `Latched` (the LED stays latched upon dropping out of the FlexLogic operand).

Notes:

- LED 1: IN-SERVICE – non-programmable. The LED is hardcoded to show a green light when the relay is fully functional and an orange light when the relay is not programmed, or experiences a self-test error.
- LED 2: TRIP - see the default setpoint above and the description
- LED 3: ALARM - see the default setpoint above and the description
- LED 4: PICKUP – programmable. The LED is defaulted to show a green light when at least one element has picked up.

5.12.2 PROGRAMMABLE PUSHBUTTONS

> *Note:*
> *The 10 pushbutton panel is available only for the 850 for hardware versions A and B, and for all models from hardware version C.*

The user-programmable pushbuttons provide an easy and error-free method of entering digital state (on, off) information. Depending on the faceplate three to ten pushbuttons are available for programming.

The digital state of the pushbuttons can be entered only locally (by directly pressing the front panel pushbutton). Typical applications include breaker control, autorecloser blocking and settings groups changes. The user-programmable pushbuttons are under the control level of password protection.

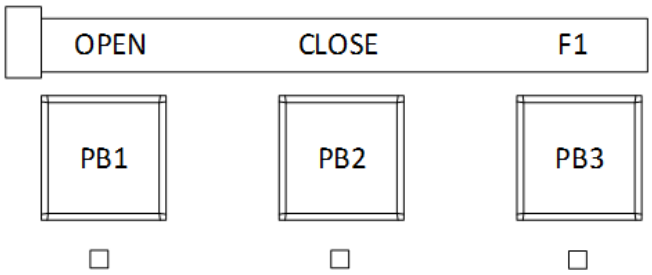

Figure 76: 3 Pushbutton Front Panel

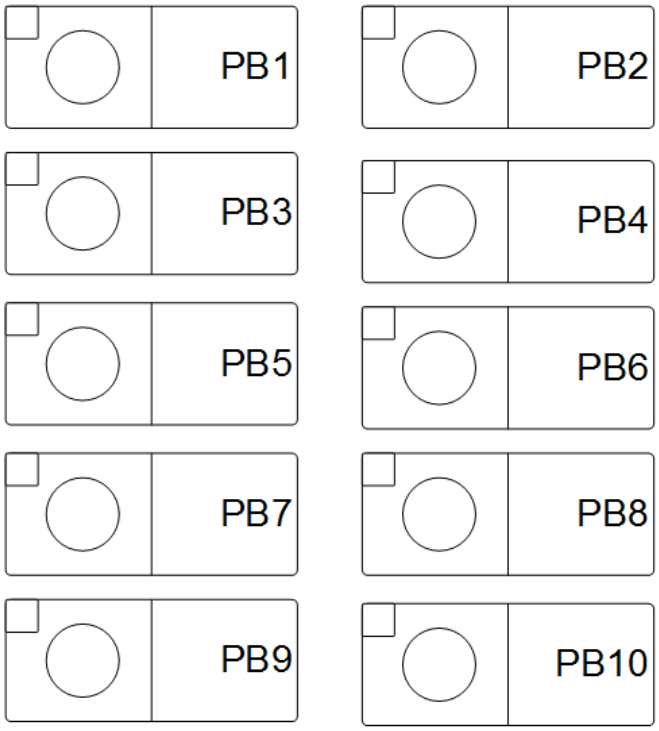

Figure 77: 10 Pushbutton Front Panel

Each pushbutton asserts its own on and off FlexLogic operands (for example, PUSHBUTTON 1 ON and PUSHBUTTON 1 OFF). These operands are available for each pushbutton and are used to program specific actions. Each pushbutton has an associated LED indicator. By default, this indicator displays the present status of the corresponding pushbutton; ON or OFF. This can be changed by programming the ***LED Trigger*** setting in the Programmable LED settings menu.

The activation and deactivation of user-programmable pushbuttons is dependent on whether latched or self-reset mode is programmed.

LATCHED MODE

In Latched Mode, a pushbutton can be set (activated) by directly pressing the associated front panel pushbutton. The pushbutton maintains the set state until deactivated by a ***Reset*** command or after a user-specified time delay. The state of each pushbutton is stored in non-volatile memory and maintained through loss of control power.

The pushbutton is Reset (deactivated) in Latched Mode by directly pressing the associated active front panel pushbutton. It can also be programmed to Reset automatically through the ***PB 1 AUTORESET*** and ***PB 1 AUTORESET DELAY*** settings. These settings enable the auto-reset timer and specify the associated time delay. The auto-reset timer can be used in select-before-operate (SBO) switching device control applications, where the

command type (CLOSE/OPEN) must be selected prior to command execution. The selection must Reset automatically if control is not executed within a specified time period.

SELF-RESET MODE

In Self-reset mode, a pushbutton remains active for the time it is pressed (the pulse duration) plus the Dropout time specified in the ***PUSHBTN 1 DROPOUT TIME*** setting. The pushbutton is Reset (deactivated) in Self-reset mode when the dropout delay specified in the ***PUSHBTN 1 DROPOUT TIME*** setting expires.The pulse duration of the pushbutton must be at least 50 ms to operate the pushbutton. This allows the user-programmable pushbuttons to properly operate during power cycling events and various system disturbances that may cause transient assertion of the operating signals.

The operation of each user-programmable pushbutton can be inhibited through the ***PUSHBTN 1 LOCK*** setting. If locking is applied, the pushbutton ignores the commands executed through the front panel pushbuttons. The locking functions are not applied to the auto-reset feature. In this case, the inhibit function can be used in SBO control operations to prevent the pushbutton function from being activated and ensuring “one-at-a-time” select operation.

The locking functions can also be used to prevent accidental pressing of the front panel pushbuttons.

Pushbutton states can be logged by the Event Recorder and displayed as Target Messages. In latched mode, user-defined messages can also be associated with each pushbutton and displayed when the pushbutton is ON or changing to OFF.

Path:***Setpoints*** > ***Device*** > ***Programmable PBs*** > ***Pushbutton 1(X)***

FUNCTION

Range: Self-reset, Latched, Disabled

Default: Self-reset

This setting selects the characteristic of the pushbutton. If set to `Disabled` the pushbutton is not active and the corresponding FlexLogic operands (both ON and OFF) are de-asserted. If set to ***Self-reset*** the control logic is activated by the pulse (longer than 100 ms) issued when the pushbutton is being physically pressed.

When in `Self-reset` mode and activated locally, the pushbutton control logic asserts the ON corresponding FlexLogic operand as long as the pushbutton is being physically pressed, and after being released the deactivation of the operand is delayed by the ***PUSHBTN 1 DROPOUT TIME*** setting. The OFF operand is asserted when the pushbutton element is deactivated.

If set to `Latched`, the control logic alternates the state of the corresponding FlexLogic operand between ON and OFF on each button press or by virtually activating the pushbutton (assigning Set and Reset operands). When in `Latched` mode, the states of the FlexLogic operands are stored in a non-volatile memory. Should the power supply be lost, the correct state of the pushbutton is retained upon subsequent power-up of the relay.

ID TEXT

Range: Up to 13 alphanumeric characters

Default: Open (PB1), Close (PB2), F1 (PB3), Gnd Trip Enabled (PB4), SCADA Enabled (PB5), Hot Line Tag (PB6), Demand Reset (PB7), Alt Settings (PB8), Target Reset (PB9), PB Block (PB10)

Default: Start (PB1), Stop (PB2), F1 (PB3), Gnd Trip Enabled (PB4), SCADA Enabled (PB5), Hot Line Tag (PB6), Demand Reset (PB7), Alt Settings (PB8), Target Reset (PB9), PB Block (PB10)

This setting specifies the 13-character line of the user-programmable message and is intended to provide the ID information of the pushbutton.

ON TEXT

Range: Up to 13 alphanumeric characters

Default: PB1 On (or PB[X] On)

This setting specifies the 13-character line of the user-programmable message and is displayed when the pushbutton is in the ON position.

OFF TEXT

Range: Up to 13 alphanumeric characters

Default: PB1 Off (or PB[X] On)

This setting specifies the 13-character line of the user-programmable message and is displayed when the pushbutton is activated from the ON to the OFF position and the ***PUSHBUTTON 1 FUNCTION*** is `Latched`. This message is not displayed when the ***PUSHBUTTON 1 FUNCTION*** is `Self-reset` as the pushbutton operand status is implied to be “OFF” upon its release. The length of the “OFF” message is configured with the ***PRODUCT SETUP/DISPLAY PROPERTIES/FLASH MESSAGE TIME*** setting.

The message programmed in the ***PUSHBTN 1 ID*** and ***PUSHBTN 1 ON TEXT*** settings will be displayed as long as Pushbutton 1 On operand is asserted, but not longer than the time period specified by the ***FLASH MESSAGE TIME*** setting. After the flash time has expired, the default message or other active target message is displayed. The instantaneous Reset of the flash message will be executed if any relay front panel button is pressed or if any new target or message becomes active.

The ***PUSHBTN 1 OFF TEXT*** setting is linked to Pushbutton 1 Off operand and will be displayed in conjunction with ***PUSHBTN 1 ID*** only if the pushbutton element is in `Latched` mode.

HOLD PRESSED

Range: 0.0 to 10.0 s in steps of 0.1 s

Default: 0.1 s

This setting specifies the time required for a pushbutton to be pressed before it is deemed active.

The timer is Reset upon release of the pushbutton. Note that any pushbutton operation will require the pushbutton to be pressed a minimum of 60 ms. This minimum time is required prior to activating the pushbutton hold timer.

AUTORESET

Range: Disabled, Enabled

Default: Disabled

This setting enables the user-programmable pushbutton Autoreset feature. The setting is applicable only if the pushbutton is in `Latched` mode.

AUTORESET DELAY

Range: 0.2 to 600.0 s in steps of 0.1 s

Default: 1.0 s

This setting specifies the time delay for automatic Reset of the pushbutton when in the `Latched` mode.

LOCK

Range: Off, Any FlexLogic operand

Default: Off

This setting assigns a FlexLogic operand serving to inhibit pushbutton operation from the front panel pushbuttons. This locking functionality is not applicable to pushbutton autoreset.

DROPOUT TIME

Range: 0.0 to 600.0 s in steps of 0.1 s

Default: 0.0 s

This setting applies only to `Self-reset` mode and specifies the duration of the pushbutton “active” status after the pushbutton has been released. The length of time the operand remains on has no effect on the pulse duration.

The setting is required to set the duration of the pushbutton operating pulse.

EVENTS

Range: Disabled, Enabled

Default: Enabled

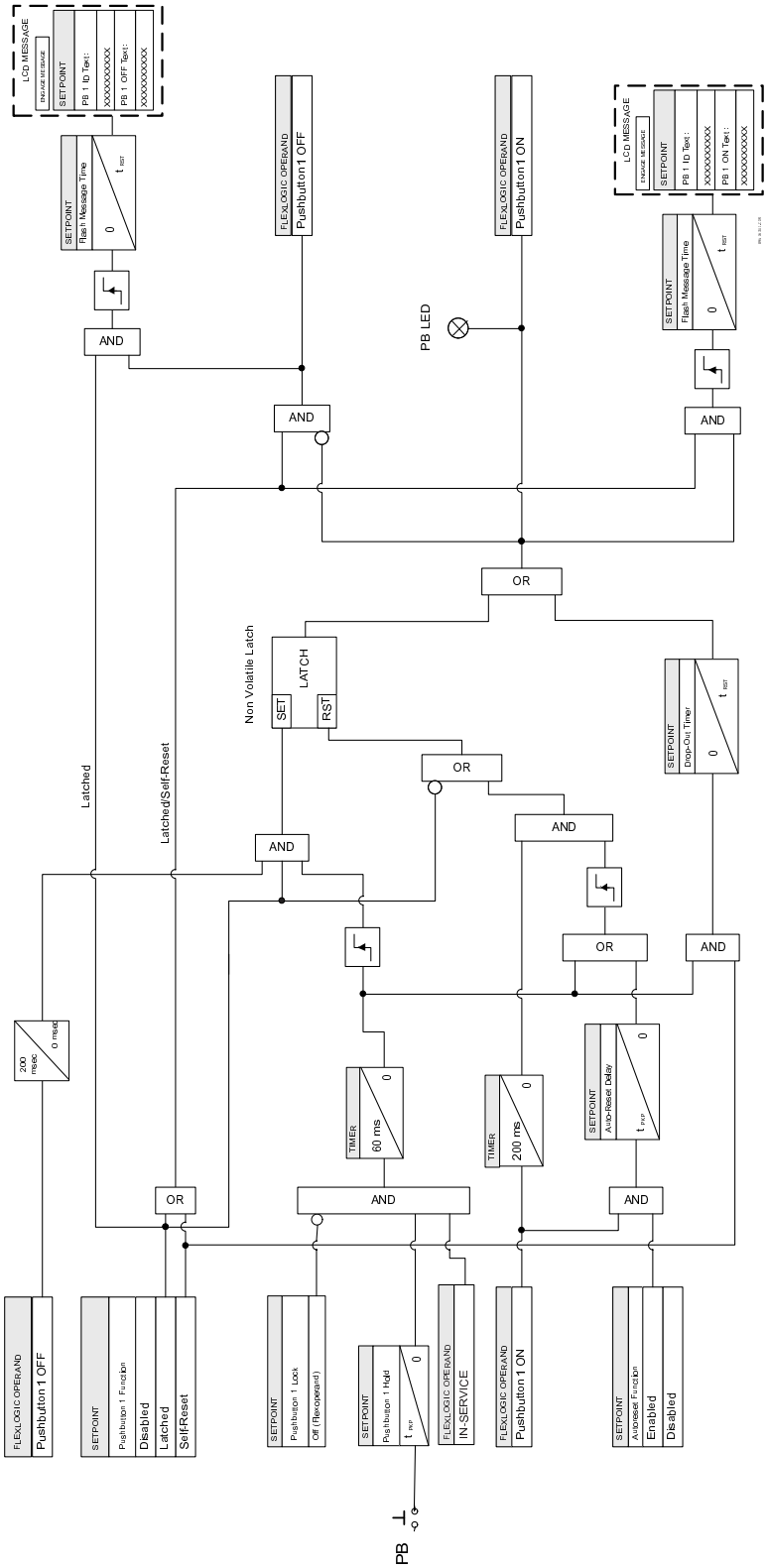

Figure 78: Pushbuttons Logic Diagram

PB1 to PB3 Default Values (3 pushbutton Front Panels)

	PB1	PB2	PB3
Function	Self-Reset	Self-Reset	Self-Reset

	PB1	PB2	PB3
ID Text	Open	Close	F1
ON Text	PB1 ON	PB2 ON	PB3 ON
OFF Text	PB1 OFF	PB2 OFF	PB3 OFF
LED Trigger	PB1 ON	PB2 ON	PB3 ON
Hold Pressed	0.1s	0.1s	0.1s
Autoreset	Disabled	Disabled	Disabled
Autoreset Delay	1.0s	1.0s	1.0s
Lock	Off	Off	Off
Dropout Time	0.0s	0.0s	0.0s
Events	Enabled	Enabled	Enabled

PB1 to PB10 Default Values (10 Pushbutton Membrane Front Panel)

	PB1	PB2	PB3	PB4	PB5	PB6	PB7	PB8	PB9	PB10
Function	Self-Reset	Self-Reset	Self-Reset	Self-Reset	Self-Reset	Self-Reset	Self-Reset	Self-Reset	Self-Reset	Latched
ID Text	Open	Close	PB3 Ctrl	Ground Trip Enabled	Remote Enabled	PB6 Ctrl	Demand Reset	Alternate Settings	Trigger Transient Recorder	PB Lock
ON Text	PB1 ON	PB2 ON	PB3 ON	PB4 ON	PB5 ON	PB6 ON	PB7 ON	PB8 ON	PB9 ON	PB10 ON
OFF Text	PB1 OFF	PB2 OFF	PB3 OFF	PB4 OFF	PB5 OFF	PB6 OFF	PB7 OFF	PB8 OFF	PB9 OFF	PB10 OFF
LED Trigger	PB1 ON	PB2 ON	PB3 ON	PB4 ON	Local Mode OFF	PB6 ON	PB7 ON	PB8 ON	PB9 ON	PB10 ON
Hold Pressed	0.1s	0.1s	0.1s	0.1s	0.1s	0.1s	0.1s	0.1s	0.1s	3.0s
Autoreset	Disabled	Disabled	Disabled	Disabled	Disabled	Disabled	Disabled	Disabled	Disabled	Disabled
Autoreset Delay	1.0s	1.0s	1.0s	1.0s	1.0s	1.0s	1.0s	1.0s	1.0s	1.0s
Lock	PB10 ON	PB10 ON	PB10 ON	PB10 ON	PB10 ON	PB10 ON	PB10 ON	PB10 ON	PB10 ON	Off
Dropout Time	0.0s	0.0s	0.0s	0.0s	0.0s	0.0s	0.0s	0.0s	0.0s	0.0s
Events	Enabled	Enabled	Enabled	Enabled	Enabled	Enabled	Enabled	Enabled	Enabled	Enabled

5.12.3 TAB PUSHBUTTONS

The Tab Pushbuttons provide an easy and error-free method of entering digital state (on, off) information. Twenty (20) Tab Pushbuttons are available for programming.

The digital state of the Tab Pushbuttons can be entered locally (by directly pressing the front panel pushbutton) or through Modbus by specifying the correct COMMAND sequence. Typical applications include breaker control, autorecloser blocking, and settings groups changes. The Tab Pushbuttons are under the control level of password protection. Only one pushbutton can be pressed at a time. If multiple pushbuttons are pressed simultaneously, the button pressed first takes the priority.

The Tab Pushbutton settings can be accessed from ***Setpoints*** > ***Device*** > ***Front Panel*** > ***Tab Pushbuttons*** > ***Tab PB1***. The Tab Pushbutton control can be executed by navigating to ***Status*** > ***Summary*** > ***Tab Pushbuttons***. By

default, the summary page is shown to quickly glance at the active tab pushbuttons. The individual pages can then be accessed from the summary page. Each Tab Pushbutton asserts its own OFF and ON FlexLogic operands (for example, TAB PB 1 ON and TAB PB 1 OFF). These operands are available for each pushbutton and can be used to program specific actions. Each pushbutton has an associated “LED” indicator. By default, this indicator displays the present status of the corresponding pushbutton ON state.

The activation and deactivation of Tab Pushbuttons is dependent on whether latched or self-reset mode is programmed.

SELF-RESET MODE: In Self-reset mode, a Tab Pushbutton remains active for the time it is pressed (the pulse duration) plus the Dropout time specified in the settings. The pushbutton is deactivated in Self-reset mode when the dropout delay specified in the Dropout Time setting expires. The pulse duration of the pushbutton must be at least 100ms to operate the pushbutton.

LATCHED MODE: In Latched Mode, a pushbutton can be set (activated) by directly pressing the associated tab pushbutton. The pushbutton maintains the set state until deactivated by another press of the same button. The state of each pushbutton is stored in non-volatile memory and maintained through the loss of control power.

Path: ***Setpoints*** > ***Device*** > ***Front Panel*** > ***Tab PBs*** > ***Tab PB1(X)***

FUNCTION

Range: Self-reset, Latched, Disabled

Default: Self-reset (up to 3.xx)

Default: Disabled (from 4.10)

This setting selects the characteristic of the pushbutton. If disabled, the pushbutton is not active and the corresponding FlexLogic operands (both ON and OFF) are de-asserted. If set to Self-reset the control logic is activated by the pulse issued when the pushbutton is being physically pressed.

When in Self-Reset mode and activated locally, the pushbutton control logic asserts the Tab PB [X] ON FlexLogic operand as long as the pushbutton is being physically pressed, and after being released the deactivation of the operand is delayed by the Dropout Time setting. The OFF operand is asserted when the pushbutton element is deactivated.

If set to Latched, the control logic alternates the state of the corresponding FlexLogic operand between ON and OFF on each button press. When in Latched mode, the states of the FlexLogic operands are stored in a non-volatile memory. Should the power supply be lost, the correct state of the pushbutton is retained upon subsequent power-up of the relay. When the pushbutton operand is in the ON state, the operand appears on the target message until the pushbutton is pressed again to change it to the OFF state.

ID TEXT

Range: Up to 13 alphanumeric characters

Default: Tab PB 1 (or Tab PB[X])

This setting specifies the 13-character line of the user-programmable message and is intended to provide the ID information of the pushbutton. This text is used to describe the pushbutton in the FlexLogic operands.

LINE 1 TEXT

Range: 2 lines of alphanumeric characters

Default: [blank]

This setting specifies the text that is displayed on Line 1 of the button when in the normal view.

LINE 2 TEXT

Range: 2 lines of alphanumeric characters

Default: [blank]

This setting specifies the text that is displayed on Line 2 of the button when in the normal view.

LINE 1 SHORT TEXT

Range: 2 lines of alphanumeric characters

Default: [blank]

This setting specifies the text that is displayed on Line 1 of the button when in the summary view. This is also the text that appears on the tabs when operating the pushbuttons from the Single Line Diagram view.

LINE 2 SHORT TEXT

Range: 2 lines of alphanumeric characters

Default: [blank]

This setting specifies the text that is displayed on Line 2 of the button when in the summary view.

BUTTON COLOR

Range: Black, Red, Yellow, Blue, Green, Teal, Purple, White

Default: Black

This setting specifies the background color of the Tab Pushbutton. If the button is disabled, the button color by default is shown as gray.

TEXT COLOR

Range: Black, Red, Yellow, Blue, Green, Teal, Purple, White

Default: White

This setting specifies the text color of the Tab Pushbutton.

INDICATOR COLOR

Range: Black, Red, Yellow, Blue, Green, Teal, Purple, White

Default: Yellow

This setting specifies the color of the “LED” indicator for the Tab Pushbutton.

INDICATOR TRIGGER

Range: TAB PB 1 ON, Any FlexLogic operand

Default: TAB PB 1 ON

This setting assigns a FlexLogic operand to trigger the Indicator to change color from the default color (white) to the selected color.

HOLD PRESSED

Range: 0.1 to 10.0 s in steps of 0.1 s

Default: 0.1 s

This setting specifies the time required for a pushbutton to be pressed before it is deemed active.

The timer is Reset upon release of the pushbutton. Note that any pushbutton operation will require the pushbutton to be pressed a minimum of 100ms.

AUTORESET

Range: Disabled, Enabled

Default: Disabled

This setting enables the Tab Pushbutton Autoreset feature. The setting is applicable only if the pushbutton is in “Latched” mode.

AUTORESET DELAY

Range: 0.2 to 600.0 s in steps of 0.1 s

Default: 1.0 s

This setting specifies the time delay for automatic Reset of the pushbutton when in the “Latched” mode.

LOCK

Range: Any FlexLogic operand

Default: Off

This setting assigns a FlexLogic operand to inhibit pushbutton operation from the front panel pushbuttons. This locking functionality is not applicable to pushbutton autoreset.

DROPOUT TIME

Range: 0.0 s to 600.0 s in steps of 0.1 s

Default: 0.0 s

This setting applies only to “Self-reset” mode and specifies the duration of the pushbutton “active” status after the pushbutton has been released. The length of time the operand remains on has no effect on the pulse duration.

The setting is required to set the duration of the pushbutton operating pulse.

EVENTS

Range: Disabled, Enabled

Default: Enabled

5.12.4 ANNUNCIATOR

The graphical annunciator panel provides an emulation of a conventional physical annunciator panel with backlit indicators each inscribed with a description of the alarm condition that lights the indicator. The annunciator has 36 user-configurable (programmable) indicators. The indicators can be arranged in pages of 3x3 or 2x2 grids. Each indicator can have up to 3 lines of configurable text. When the indicators are not active (i.e. a configured FlexOperand for the annunciator is not triggered), the background is black and the foreground text color is gray. When the associated FlexOperand becomes active, the background and the foreground turns brighter in color per the color configuration. When disabled, the indicators are grayed out with no text.

Layout

If the grid layout is selected to be 3x3, the annunciator has 4 pages. If the grid layout is 2x2, the annunciator has 9 pages. The numbering of the indicators is shown as follows.

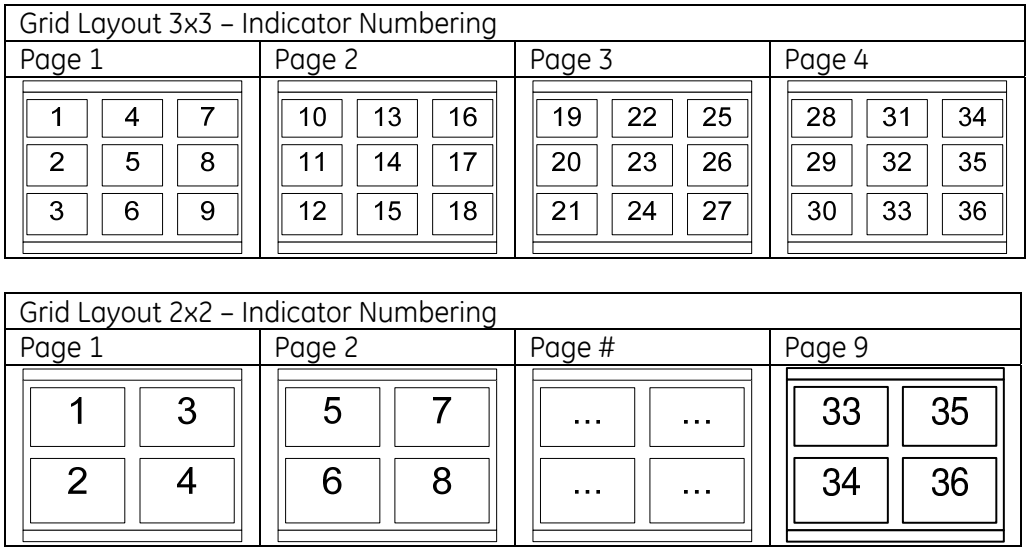

Figure 79: Annunciator grid layout

Navigation

The annunciator panel can be displayed in two ways. By default, the annunciator panel is programmed as one of the homescreens. This means that when on the home page, pressing the home button multiple times rotates through all the homescreens. Alternatively, the annunciator can be accessed by navigating to **Status\Summary \Annunciator\Page1**. Individual annunciator pages can also be assigned as a homepage. If the auto navigation setting is enabled in the setup, the screen automatically jumps from home to the annunciator page with the first active alarm. Pages with active alarms will have a maroon flashing tab pushbutton label. If other pages have active alarms, the **>>** button will show a flashing label.

Path:***Setpoints*** > ***Device*** > ***Front Panel*** > ***Annunciator*** > ***Annunciator Setup***

RESET ANNUNCIATOR

Range: Off, any FlexLogic operand

Default: Off

This setting designates a FlexLogic operand that, when activated, acknowledges/resets all annunciator windows in the graphical front panel. This setting is the same as that defined under **Setpoints > Device > Resetting > Reset Annunciator**.

The Reset Annunctr OP (OPRD) FlexLogic operand is activated by the two sources of ***RESET*** command, operand source and manual source. Each individual source of a ***RESET ANNUNCIATOR*** command also activates its individual operand Reset Annunctr OP (OPRD) or Reset Annunctr OP (MNUL) to identify the source of the command. Both of these operands generate an event in the event record when activated. The Reset Annunciator setting selects the operand that activates the Reset Annunctr OP (OPRD) operand. The ***RESET*** pushbutton in the front panel or the reset command from the EnerVista D&I Setup software 8 Series Setup software activates the Reset Annunctr OP (MNUL) operand.

PAGE LAYOUT

Range: 3x3, 2x2

Default: 3x3

This setting selects the grid layout of the annunciator pages. The default 3x3 grid layout provides 4 annunciator pages and 2x2 provides 9 pages.

AUTO NAVIGATION

Range: Disabled, Enabled

Default: Enabled

This setting when enabled, automatically navigates to the annunciator panel page from where the indication was triggered. While in the annunciator panel, if no action is taken, the screen returns back to the home page after the timeout setting.

FOCUSED NAVIGATION

Range: Disabled, Enabled

Default: Disabled

When this setting is enabled at the same time as the ***AUTO NAVIGATION*** setting, the page that has the active indicator will come into focus. The focus will change to the newest indicator as soon as that becomes active. Target Messages and Default Screens both have a lower priority than the ***FOCUSED NAVIGATION*** setting of the Annunciator Panel.

Path:***Setpoints*** > ***Device*** > ***Front Panel*** > ***Annunciator*** > ***Indicator 1(36)***

ALARM INPUT

Range: Off, any FlexLogic Operand

Default: Off

This setting specifies the input operand used to activate the corresponding indicator.

ALARM TYPE

Range: Off, Self-Reset, Latched

Default: Off

This setting specifies the alarm type. Self-Reset alarms track the state of the corresponding input operand. Latched alarms can be reset using Reset pushbutton or through Acknowledgment via graphical front panel.

The alarm type of each annunciator indicator may be configured as `Off`, `Self-Reset`, or `Latched`. The default mode is Off. In this mode, the indicator is grayed out without any text. In self-reset mode, the indicator's inactive state is by default in black background with dark gray color text. When the associated operand becomes active (i.e. the assigned FlexOperand is triggered), the configured background color and foreground text color appears. In latched mode, the configured operand causes the background to flash when it becomes active. If the alarm is then acknowledged or reset, the background stops flashing. If the operand becomes inactive, the indicator returns to its default colors. The behavior of these modes conforms to ISA-18.1-1979 (R2004) standard - A-4-5-6 (self-reset), and M-6 (latched).

Note:
If the Annunciator Alarm was initiated by another element that is of a Latched type (e.g. Trip Bus), you must navigate out of the Annunciator and then reset the latched element. This action will reset the latched element, the Annunciator Alarm and also the Trip LED if applicable.

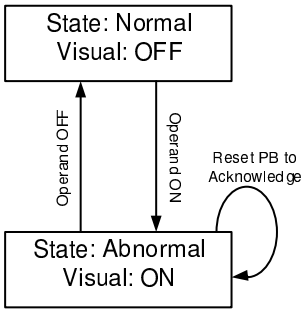

Figure 80: Self-Reset Mode

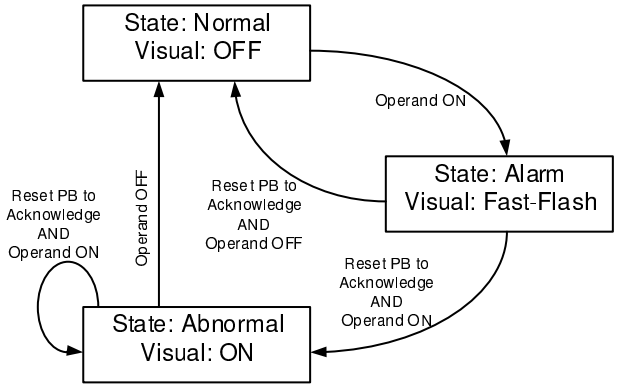

Figure 81: Latched Mode

When any annunciator page is displayed with an alarm condition, the navigation keys can be used to select an indicator. Once selected, the alarm condition can be acknowledged by pressing the reset pushbutton or by pressing the enter key. A confirmation message is displayed for acknowledging the alarm. Pressing the **Reset** or **Enter** key again acknowledges the alarm and pressing the Escape button discards the message. When the alarms are active under latched mode, a power loss retains the previous state of the alarm as the alarm states are stored in non-volatile memory.

TEXT LINE 1 (2,3)

Range: 15 Alphanumeric Characters

Default: [blank]

These settings specify the displayed text on the corresponding line in the alarm indicator. Three lines can be displayed with each line allowing up to 15 alphanumeric characters.

TEXT COLOR

Range: Black, Red, Yellow, Blue, Green, Teal, Purple, White

Default: White

This setting specifies the color of the alarm indicator text.

BACK COLOR

Range: Black, Red, Yellow, Blue, Green, Teal, Purple, White

Default: Red

This setting specifies the color of the alarm indicator background. When the indicator becomes active, the background changes color from the default Black to the programmed alarm back color.

5.12.5 DISPLAY PROPERTIES

Some relay messaging characteristics can be modified to suit different situations using the Front Panel Display Properties setting.

Path: ***Setpoints*** > ***Device*** > ***Front Panel*** > ***Display Properties***

COLOR SCHEME

Range: Green (open), Red (open)

Default: Green (open)

This setting defines the color scheme for the breaker status. If it is programmed Green (open), the breaker open status is shown in the color green on the single line diagram and on the device status.

FLASH MESSAGE TIME

Range: 1 to 10 s in steps of 1 s

Default: 5 s

Flash messages are status, warning, error, or information messages displayed for several seconds in response to certain key presses during programming. These messages override any normal messages. The duration of a flash message on the display can be changed to accommodate different reading rates.

MESSAGE TIMEOUT

Range: 10 to 900 s in steps of 1 s

Default: 30 s

If no pushbutton has been pressed for a certain period of time, the relay automatically reverts to its default message (screen). The inactivity time is modified via this setting to ensure messages remain on the screen long enough during programming.

The target message interrupts the message timeout, overriding it. The message timeout starts timing after each target message, and if no more activity is recorded for the specified time, the display goes back to the default screen.

SCREEN SAVER

Range: Off, On

Default: Off

When the screen saver is set to ON, the LCD backlighting is turned off after the Message Timeout followed by a time of 5 min, providing that no PB has been pressed and no target messages are active. When a PB press occurs, or a target becomes active, the LCD backlighting is turned on.

DISPLAY INTENSITY

Range: 10 to 100%

Default: 100%

The backlight can be reduced be make the screen easier to view under higher ambient lighting.

> *Note:*
> *Only available on Membrane and Ten Pushbutton front panels.*

SCREEN SAVER INTENSITY

Range: 0 to 100% in steps of 10%

Default: 0%

The screen saver intensity can be varied so that the backlight is at a low intensity instead of being fully shut off.

> *Note:*
> *Only available on Membrane and Ten Pushbutton front panels.*

TARGET AUTO NAVIGATION

Range: Disabled, Enabled

Default: Disabled

When the target auto navigation is set to Enabled, it will override the current menu page and go to the target message page when a target is active.

The Active target Icon shown above, will be the only indication of active target messages.

LANGUAGE

Range: English, French, German, Polish, Russian, Ukrainian,

Default: English

This setting selects the language used to display the settings, metering, status, and targets. The range is dependent on the order code of the relay.

5.12.5.1 SUPPORT FOR CYRILLIC LANGUAGES

The 8 Series of relays support the Russian and Ukrainian languages, but for this to work you also need to configure your Windows system accordingly. You can do this by selecting the required language. Modify the settings in the following locations:

- **Control panel > Region > Adminstrative tab > Change System Locale > Language for non-Unicode programs**
- **Control panel > Region > Language Preferences**

For more information, refer to your Microsoft documentation.

5.12.6 DEFAULT SCREENS

The relay provides the convenience of configuring and displaying up to three default screens from a predefined list. Each type of screen to display can be selected, and the display time programmed. The sequence of displaying the screens starts after the time of inactivity programmed in the ***MESSAGE TIMEOUT*** setpoint, when no PB has been pressed, and no target message is present. Pressing a pushbutton, or the presence of a target message inhibits the sequential display of default screens. The screen displays resume only after the target messages are cleared, and no PB pressing is recorded for 30 seconds. When configured the home screen is changed to the first screen defined by this feature. Display timeouts also return to this first screen (i.e. default screen 1).

If the default screens feature is disabled and there are no home screens programmed, the home page will show the **Metering > Summary > Values** screen after the message timeout inactivity period.

Path: ***Setpoints*** > ***Device*** > ***Front Panel*** > ***Default Screen***

FUNCTION

Range: Disabled, Enabled

Default: Enabled

This setpoint enables the feature. Displaying of the screen starts 30 s after setting the feature to “Enabled”, providing no targets have been issued, nor a PB has been pressed.

DISPLAY TIME

Range: 5 to 900 s in steps of 1 s

Default: 10 s

The display time is the amount of time that each of the three screens are displayed within the display sequence.

DEFAULT SCREEN X

Range: varieties of screens for selection

Default: SLD (for Default Screen 1 only), Off (for others)

This setpoint enables the user to input the default screens.

DEFAULT SCREEN INTENSITY (not available for all FW versions)

Range: 0 to 100% in steps of 10%

Default: 100%

The default screen intensity can be varied so that the backlight is at a low intensity instead of being fully shut off.

5.12.7 HOME SCREENS

The home screens allow the selection of a set of pages as home pages (max. 10). Multiple home pages are configured and navigated to by pressing the home button repeatedly. Navigate through all available home screens by repeatedly pressing the home button.

When returning to the home screen (either by pressing escape or directly pressing the Home button) through the different menus, the last accessed home screen is shown. Subsequent presses of the Home button navigates to the next programmed home screen on the list.

While accessing the home screens, the tab pushbutton navigation labels show the root menu – i.e. Targets, Status, Metering, Setpoints, and Records. The exceptions are the Tab Pushbuttons screens which instead show pushbuttons in the navigation labels.

If the default screens are enabled, the first default screen is shown after 30 seconds plus the inactivity period defined in **Setpoints > Device > Front Panel > Display Properties > Message Timeout**. If the default screens feature and screen saver are disabled, the screen defaults to the Values screen after the inactivity period.

When the home screens are programmed and the default screens feature is enabled but the screens are set to Off, the last accessed home screen is shown as the home page.

By Default, the first home screen is configured to show the first single line diagram.

> *Note:*
> *When on any single line diagram page, if an object is selected, the home button will not function. The selected object must first be de-selected by pressing the escape button to be able to use the home button functionality again.*

Path: ***Setpoints*** > ***Device*** > ***Front Panel*** > ***Home Screens***

HOME SCREEN 1

Range: All available pages

Default: SLD1

HOME SCREEN 2

Range: All available pages

Default: Tab PB Summary

HOME SCREEN 3

Range: All available pages

Default: Annunciator Pg 1

HOME SCREEN 4

Range: All available pages

Default: Values

HOME SCREEN 5 to 10

Range: All available pages

Default: Off

5.12.8 FLEXSCREENS

The FlexScreens allow you to select a page to appear on the display based on the results of an ***OPERATE*** setting. Up to five FlexScreens can be configured. When the ***OPERATE*** setting evaluates to a `TRUE`, the FlexScreen configured will be displayed.

> *Note:*
> *A pulse of 500 ms (or greater) is required to activate a FlexScreen condition.*

Path: Setpoints > Device > Front Panel > FlexScreens

FLEXSCREEN 1

Range: All available pages

Default: Off

FLEXSCREEN 1 OPERATE

Range: Off, Any FlexLogic operand

Default: Off

This setpoint requires the assignment of a FlexLogic operand to turn on FlexScreen 1.

FLEXSCREEN 2

Range: All available pages

Default: Off

FLEXSCREEN 2 OPERATE

Range: Off, Any FlexLogic operand

Default: Off

This setpoint requires the assignment of a FlexLogic operand to turn on FlexScreen 2.

FLEXSCREEN 3

Range: All available pages

Default: Off

FLEXSCREEN 3 OPERATE

Range: Off, Any FlexLogic operand

Default: Off

This setpoint requires the assignment of a FlexLogic operand to turn on FlexScreen 3.

FLEXSCREEN 4

Range: All available pages

Default: Off

FLEXSCREEN 4 OPERATE

Range: Off, Any FlexLogic operand

Default: Off

This setpoint requires the assignment of a FlexLogic operand to turn on FlexScreen 4.

FLEXSCREEN 5

Range: All available pages

Default: Off

FLEXSCREEN 5 OPERATE

Range: Off, Any FlexLogic operand

Default: Off

This setpoint requires the assignment of a FlexLogic operand to turn on FlexScreen 5.

5.13 RESETTING

Some events can be programmed to latch the faceplate LED event indicators and target message on the display. Depending on the application some auxiliary output relays can be programmed to latch after the triggering event is cleared. Once set, the latching mechanism holds all the latched indicators, messages, and auxiliary output relays in the set state, after the initiating condition has cleared, until a ***RESET*** command is received to return these latches (except the FlexLogic latches) to the reset state.

The ***RESET*** command can be sent from the faceplate **Reset** pushbutton, a remote device via a communication channel, or any programmed FlexLogic operand. Executing the ***RESET*** command from either source creates a general FlexLogic operand RESET OP. Each individual source of a ***RESET*** command also creates its individual operand RESET OP (PB), RESET (COMMS), and RESET OP (OPERAND) to identify the source of the command.

RESET INPUT 1(2,3):

Range: Off, Any FlexLogic operand

Default: Off

The setpoint selects an operand from the list of FlexLogic operands. The targets, LEDs, and latched output relays reset upon assertion from any of the operands selected as Reset Inputs.

RESET ANNUNCIATOR

Range: Off, Any FlexLogic operand

Default: Off

The setpoint selects an operand from the list of FlexLogic operands. When activated it resets all annunciator windows on the graphical front panel.

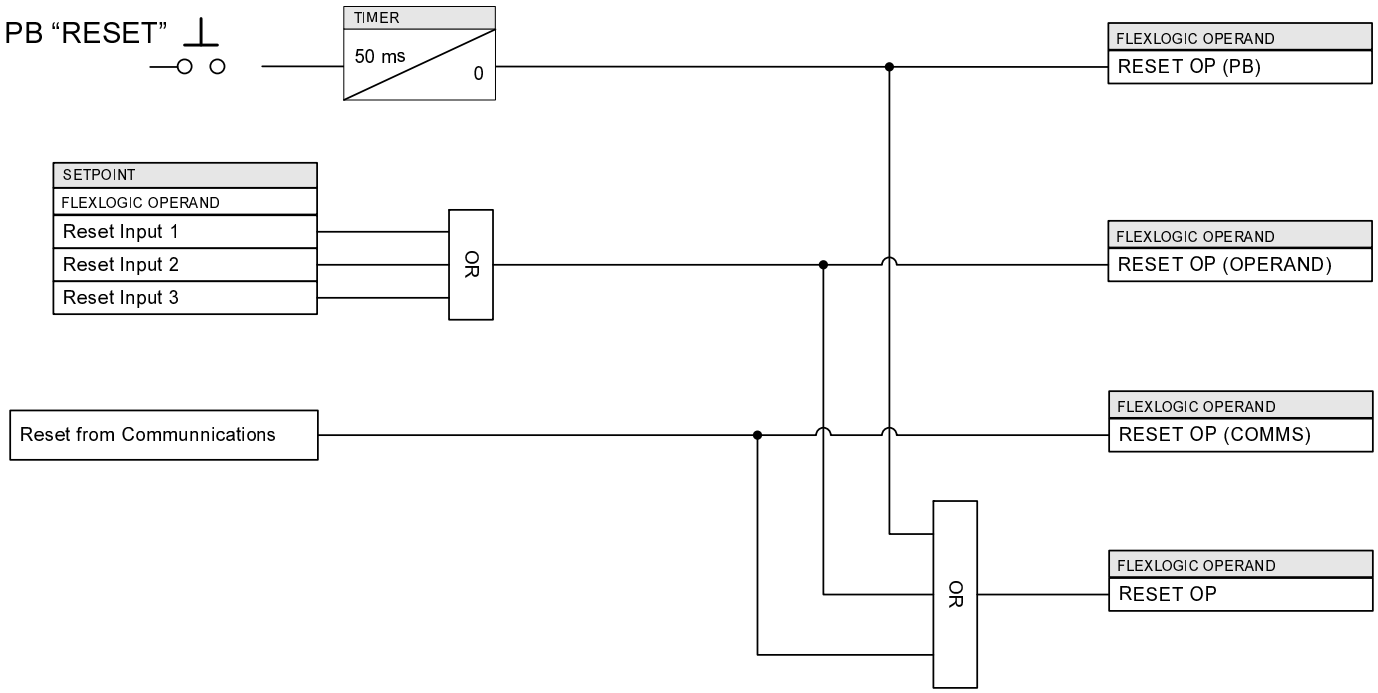

Figure 82: Reset logic

5.14 INSTALLATION

Path: ***Setpoints*** > ***Device*** > ***Installation***

DEVICE NAME

Range: Up to 13 alphanumeric characters

An alphanumeric name may be assigned to the device.

DEVICE IN SERVICE

Default: Not Ready

Range: Not Ready, Ready

The relay is defaulted to the “Not Ready” state when it leaves the factory. This safeguards against the installation of a relay whose settings have not been entered. When powered up successfully, the “IN SERVICE” LED becomes red. The relay in the “Not Ready” state blocks signaling of any output relay. These conditions remain until the relay is explicitly put in the “Ready” state.

SERVICE COMMAND

Range: 0 to 65535

Default: 0

TEMPERATURE DISPLAY

Range: Celsius, Fahrenheit

Default: Celsius

Selects engineering unit of temperature display.

VALIDATE CANBUS IO

Range: NO, YES

When the relay is booted the 8 Series relay enumerates the installed IO cards automatically. When the relay is commissioned and the Validate CANBUS IO command is set to Yes the current auto detect value is saved to non-volatile memory. This value is then used to configure all display dependencies and used in self-test validation.

REMOTE IO DETECT VALUE

Range: Up to 6 alphanumeric characters

Shows the letter type of the Remote RTD card Board ID installed (e.g. GGGG).

CURRENT CUTOFF

Range: 0.000 to 1.000 p.u. in steps of 0.001 p.u.

Default: 0.020 p.u.

VOLTAGE CUTOFF

Range: 0.0 to 300.0 in steps of 0.1 V

Default: 1.0 V

Note:
Lower the Voltage Cutoff and Current Cutoff levels with care as the relay accepts lower signals as valid measurements. Unless dictated otherwise by a specific application, the default settings of "0.020 pu" for current and "1.0 V" for voltage are recommended.

BKR 1 STATUS

Range: Enabled, Disabled

Default: Enabled

Target Message for the breaker status is shown when the set to 'Enabled'. When 'Disabled', all target messages related to breaker status will be blocked.

BKR 3 STATUS

Range: Enabled, Disabled

Default: Enabled

5.15 SELF-TEST ERRORS

The relay performs self-diagnostics at initialization (after power up), and continuously as a background task to ensure that the hardware and software are functioning correctly. There are two types of self-test warnings indicating either a minor or major problem. Minor errors indicate a problem with the relay that does not compromise protection and control functionality of the relay. Major errors indicate a problem with the relay which takes it out of service.

Caution:
Self-Test Warnings may indicate a serious problem with the relay hardware!

Upon detection of a minor problem, the relay does the following:

- Displays a detailed description of the error on the relay display as a target message
- Records the minor self-test error in the Event Recorder
- Flashes the **ALARM** LED

Upon detection of a major problem, the relay does the following:

- De-energizes critical failure relay
- De-energizes all output relays
- Blocks protection and control elements
- Turns the **IN SERVICE** LED to red
- Flashes the **ALARM** LED
- Displays **Major Self-test error** with the error code as a target message
- Records the major self-test failure in the Event Recorder

Note:
The Critical Failure Relay (Output Relay 8) is energized when the relay is in-service, and no major error is present

Under both conditions, the targets cannot be cleared if the error is still active.

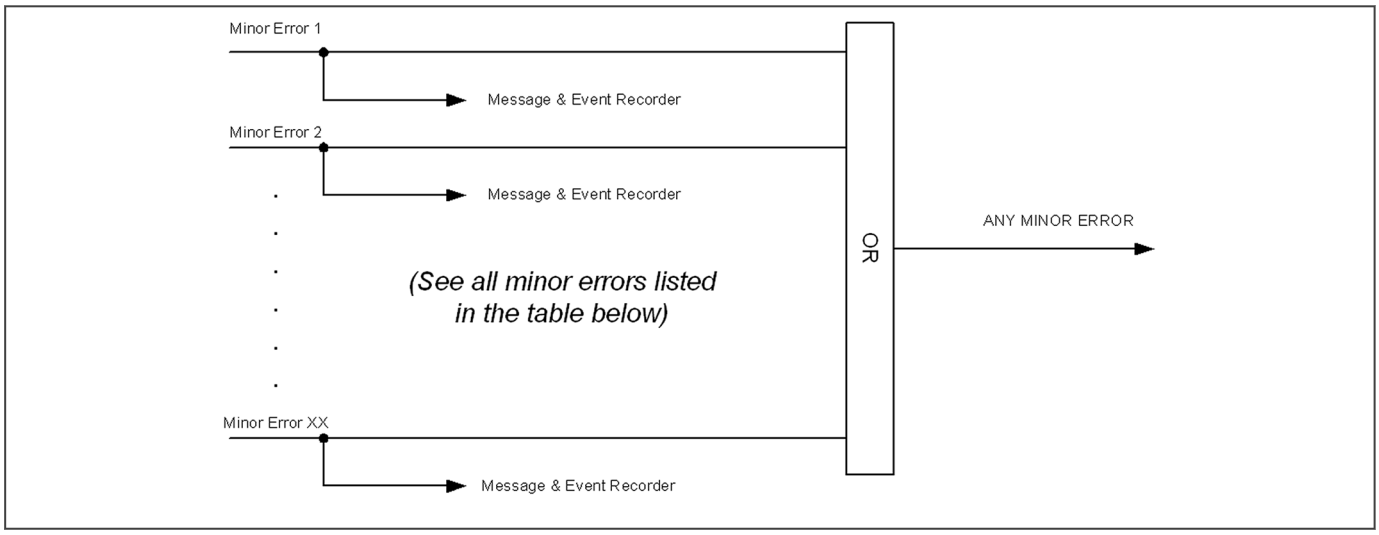

Figure 83: Minor Errors

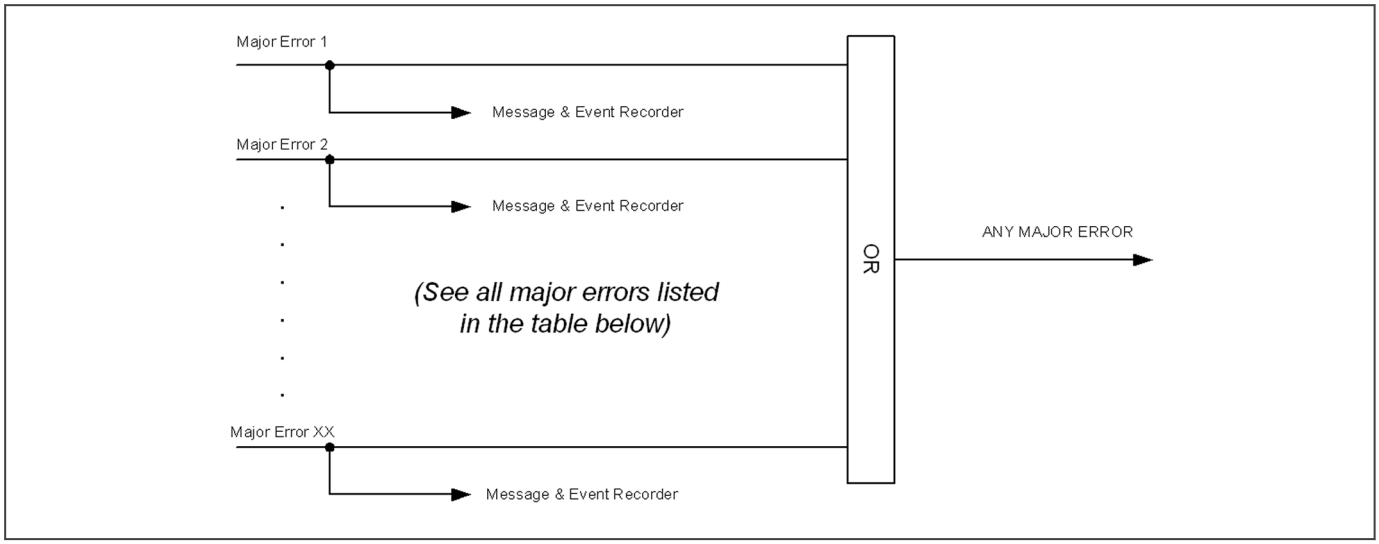

Figure 84: Major Errors

Minor self-test errors

Minor Self-test Error Message[1]	Description of Problem	Frequency of Test	What to Do
Order Code Error	Hardware doesn't match order code	Every 1 second	If alert doesn't self-reset then contact factory. Otherwise monitor re-occurrences as errors are detected and self-reset
CPU S/N Invalid	CPU card doesn't have valid data to match the order code.	Every 1 second	
Slot "$" IO S/N Invalid[2]	IO card located in slot $ doesn't have valid data to match the order code.	Every 1 second	
Comms S/N Invalid	Comms card doesn't have valid data to match the order code.	Every 1 second	
CPanel S/N Invalid	Control Panel doesn't have valid data to match the order code.	Every 1 second	
PSU S/N Invalid	Power Supply Unit doesn't have valid data to match the order code.	Every 1 second	
RTC Error	The CPU cannot read the time from the real time clock	Every 1 second	
Product Serial Invalid	The product serial number doesn't match the product type	Every 1 second	
Comm Alert #1	Communication error between CPU and Comms board	Every 1 second	
Comm Alert #2		Every 1 second	
Comm Alert #3		Every 1 second	
FLASH Error	The permanent storage memory has been corrupted	Every 1 second	
SPI Error	Communication error between CPU and LEDs, Keypad or peripheral memory devices	Every 1 second	
Invalid MAC Address	MAC address is not in the product range	Every 1 second	
Calibration Error	Unit has default calibration values	Boot-up and every 1 second	
Clock Not Set	Clock has the default time	Every 1 second	Set clock to current time
WiFi Default Settings	SSID and Passphrase is the factory default	Every 1 second	Set SSID and Passphrase
Link Error Primary[3]	Port 1 or Port 4 (depending on order code) is not connected	Every 1 second	Ensure Ethernet cable is connected, check cable functionality (i.e. physical damage or perform continuity test), and ensure master or peer device is functioning. If none of these apply, contact the factory.

Minor Self-test Error Message[1]	Description of Problem	Frequency of Test	What to Do
Link Error Secondary	Port 5 is not connected	Every 1 second	Ensure Ethernet cable is connected, check cable functionality (i.e. physical damage or perform continuity test), and ensure master or peer device is functioning. If none of these apply, contact the factory.
Traffic Error Primary	Abnormally high amount of Broadcast and Uni-cast traffic on port 1 or port 4	Every 1 second	Contact site IT department to check network for malfunctioning devices
Traffic Error Secondary	Abnormally high amount of Broadcast and Uni-cast traffic on port 5	Every 1 second	Contact site IT department to check network for malfunctioning devices
Ambient Temperature >80C	The ambient temperature surrounding the product has exceeded 80C	Every 1 second	Inspect mounting enclosure for unexpected heat sources (i.e loose primary cables) and remove accordingly
Event Rate High	Abnormally high amounts of events have been generated so the relay has stopped logging to prevent further issues	Every 1 second	Ensure settings are not set close to nominal ratings. Ensure FlexLogic equations do not have impractical timing for status events
IRIG-B Failure	A bad IRIG-B input signal has been detected	Every 1 second	Ensure IRIG-B cable is connected, check cable functionality (i.e. physical damage or perform continuity test), ensure IRIG-B receiver is functioning, and check input signal level (it may be less than specification). If none of these apply, contact the factory.
CAN_1 Error		Every 1 second	
CAN_2 Error		Every 1 second	
Version Mismatch	CPU and Comms do not have the same revision on firmware	Boot-up and Every 1 second	Ensure that both the CPU and Comms FW was uploaded during the upgrade process
SelfTestFWUpdate	The updating of the firmware failed	Every 1 second	Re-try uploading firmware. If the upload doesn't work a second time contact factory
Remote CAN IO Mismatch	RMIO card detection mismatch	Every 1 second	Check RRTD connections, check if the RRTD configuration is still valid, Validate CANBUS IO.

[1] Failure is logged after the detection of 5 consecutive failures

[2] $ is the slot ID (i.e. F, G, H etc.)

[3a] Link Error Primary can take up to 12 seconds to appear

[3b] To disable Link Error Primary target when not in use with SE order code, change IP address to 127.0.0.1

Major self-test errors

Major Self-test Error Message	Latched Target Message	Description of Problem	Frequency of Test	What to do
Relay Not Ready	No	***PRODUCT SETUP INSTALLATION*** setting indicates relay is not in a programmed state.	On power up and whenever the ***PRODUCT SETUP INSTALLATION*** setting is altered.	Program all required settings and then set the ***PRODUCT SETUP INSTALLATION*** setting to `Ready`.
Major Self-Test (error code)	Yes	Unit hardware failure detected	Every 1 second	Contact the factory and supply the failure code as noted on the display.

Note:
When a total loss of power is present, the Critical Failure Relay (Output Relay 8) is de-energized.

5.16 CLEAR RECORDS

The Clear Records command is accessible from the front panel and from the EnerVista D&I Setup software.

Path: ***Device > Clear Records***

Records can be cleared by assigning `On` to the appropriate setting.

> *Note:*
> *The Clear Records command is also available from **Records> Clear Records**, where the allowable settings also include FlexLogic operands.*

CHAPTER 6

SYSTEM SETPOINTS

6.1 CHAPTER OVERVIEW

This chapter describes the Device setpoint menu settings in detail.

This chapter contains the following sections:

Chapter Overview 212
System menu hierarchy 213
Current Sensing 214
Voltage sensing 216
Power Sensing 218
Power System 219
Generator Setup 220
Transformer 221
Breakers 222
Switches 225
FlexCurves 229

6.2 SYSTEM MENU HIERARCHY

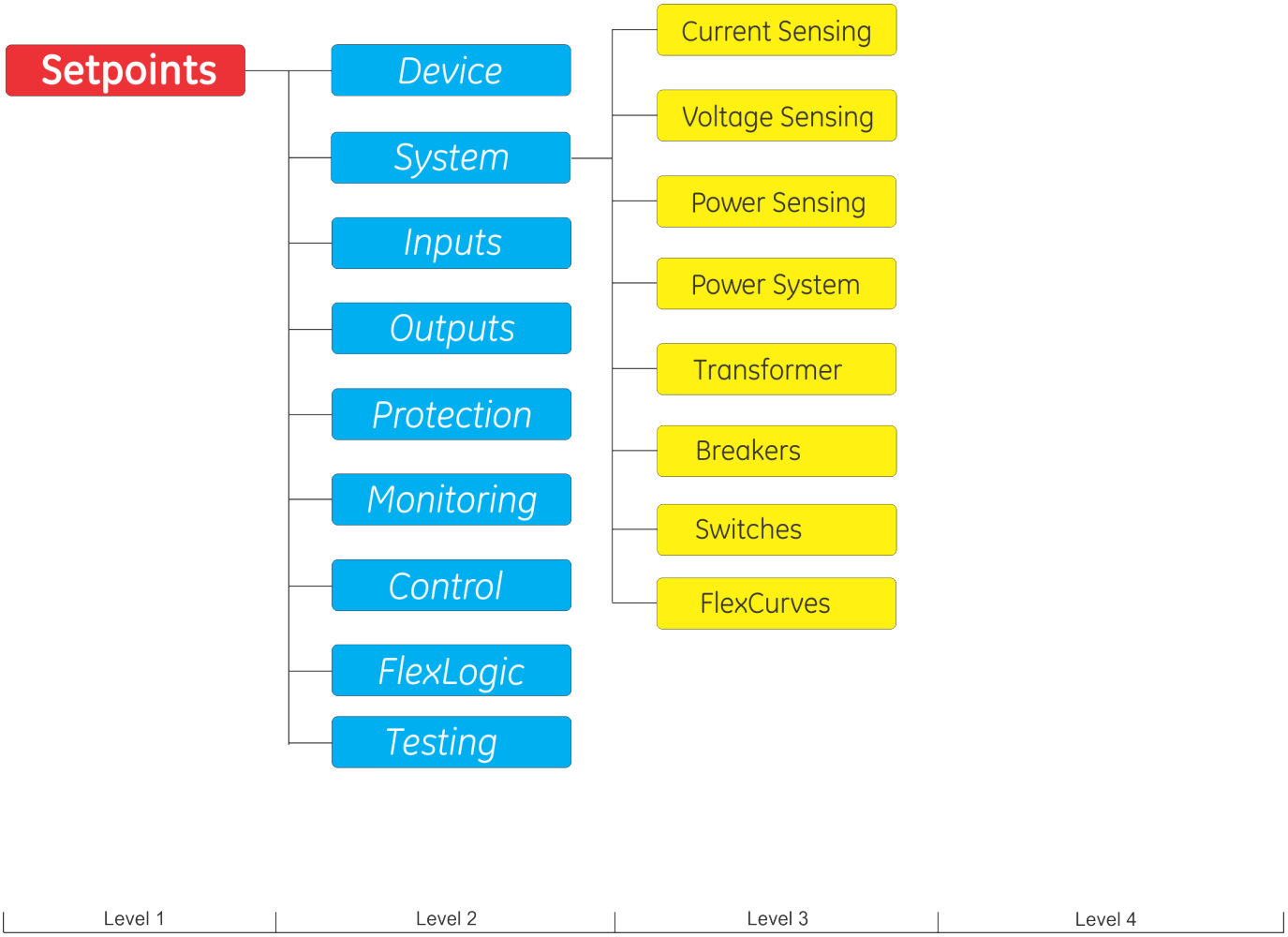

Figure 85: Device Display Hierarchy

6.3 CURRENT SENSING

Path: ***Setpoints*** > ***System*** > ***Current Sensing*** > ***CT Bank 1-J1***

CT BANK NAME

Range: Any combination of 13 alphanumeric characters

Default: CT Bank 1-J1

PHASE CT PRIMARY

Range: 1 A to 12000 A in steps of 1A (up to FW 3.xx)

Range: 1 A to 50000 A in steps of 1A (from FW 4.10)

Default: 500 A

Enter the phase CT primary current for current sensing bank J1.

GROUND CT PRIMARY

Range: 1 A to 12000 A (up to FW 3.xx)

Range: 1 A to 50000 A in steps of 1A (from FW 4.10)

Default: 500 A

Enter the rated Ground CT primary current for the ground current input for the selected Current 1 bank.

Path: ***Setpoints*** > ***System*** > ***Current Sensing*** > ***Current Bank 2-K1***

CT BANK NAME

Range: Any combination of 13 alphanumeric characters

Default: CT Bank 2-K1

PHASE CT PRIMARY

Range: 1 A to 12000 A in steps of 1A (up to FW 3.xx)

Range: 1 A to 50000 A in steps of 1A (from FW 4.10)

Default: 500 A

Enter the phase CT primary current for current sensing bank K1.

GROUND CT PRIMARY

Range: 1 A to 12000 A (up to FW 3.xx)

Range: 1 A to 50000 A in steps of 1A (from FW 4.10)

Default: 500 A

Enter the rated Ground CT primary current for the ground current input for the selected Current 2 bank.

SENS. GROUND CT PRIMARY

Range: 1 A to 12000 A in steps of 1

Default: 500 A

Note:
*The **Setpoints** > **System** > **Current Sensing** > **CT Bank 3-K2** option is available in 889 with order code option R1/R5 for Phase Current Slot K.*

Note:
Sensitive Ground CT in the K1 slot is order code dependent.

6.4 VOLTAGE SENSING

The Voltage Sensing menu provides the setup for all VTs (PTs) connected to the relay voltage terminals.

Path: ***Setpoints*** > ***System*** > ***Voltage Sensing*** > ***Ph VT Bnk1-J2***

PHASE VT BANK NAME

Range: Any combination of 13 alphanumeric characters

Default: Ph VT Bnk 1-J2

Enter the name of the phase voltage from bank J2.

PHASE VT CONNECTION

Range: Wye, Delta, Single

Default: Wye

Select the type of phase VT connection to match the VTs (PTs) connected to the relay.

PHASE VT SECONDARY

Range: 10.0 to 240.0 V in steps of 0.1 V

Default: 120.0 V

Select the output secondary voltage for phase VTs connected to the J2 bank.

PHASE VT RATIO

Range: 1.00 to 5000.00 in steps of 0.01

Default: 1.00

Select the phase VT ratio to match the ratio of the VTs connected to the J2 bank.

AUX. VT NAME

Range: Any combination of 13 alphanumeric characters

Default: Ax VT Bnk1-J2

Enter the name of the auxiliary voltage from bank J2.

AUX. VT CONNECTION

Range: Van, Vbn, Vcn, Vab, Vbc, Vca, Vn

Default: Van

Select the voltage type corresponding to the one applied to the Aux VT relay terminals from bank J2. Select Vn (neutral voltage), if the neutral voltage is applied to the relay auxiliary VT.

AUX. VT SECONDARY

Range: 10.0 to 240.0 V in steps of 0.1 V

Default: 120.0 V

Select the output secondary voltage of the aux. VT connected to the aux. VT input from bank J2.

AUX. VT RATIO

Range: 1.00 to 5000.00 in steps of 0.01

Default: 1.00

Select the aux. VT ratio to match the ratio of the VT connected to the aux. VT input from bank J2.

Note:
*The nominal **PHASE VT SECONDARY** and the **AUX VT SECONDARY** voltage settings are the voltages across the phase VT terminals and the auxiliary VT terminals correspondingly when nominal voltage is applied.*

Note:
*For example, on a system of 13.8kV nominal primary voltage, and a 14400:120 volt VT in a Delta connection, the secondary voltage would be 115V, i.e. (13800/14400)*120. For a Wye connection, the voltage value entered must be the phase to neutral voltage which would be 115/√3 = 66.4 V.*

Note:
On a 14.4 kV system with a Delta connection and a VT primary to secondary turns ratio of 14400:120, the voltage value entered would be 120 V, i.e. 14400/120.

6.5 POWER SENSING

The power computation is performed using the voltage and current inputs from the card inserted in slot J. In cases when the connected VTs and CTs have opposite polarity, the power sensing menu provides for inverting the power measurement.

Path: ***Setpoints*** > ***System*** > ***Power Sensing***

3PH VT BANK INPUT

Range: Dependent upon the order code

Default: J2-3VT

This setpoint selects the 3-phase VT inputs used for Power (X) computation.

3PH CT BANK INPUT

Range: Dependent upon the order code

Default: J1-3CT

This setpoint selects the 3-phase CT inputs for Power (X) computation.

PHASE CT&VT POLARITY

Range: Same, Inverse

Default: Same

When `Inverse` is selected, this setpoint inverts (multiplies phase currents by -1) the CT polarity for the phase currents from CT bank J1, with respect to the phase voltages from the VT bank J2.

> *Note:*
> *The setpoint for inversion of the power metering will be useful to avoid the physical inversion of the CT connections on the relay. As the power metering will affect the power directional elements, the user must determine the correct forward and reverse direction of the power, before setup.*

RESET EVENT ENERGY

Range: Off, Any FlexLogic operand

Default: Off

At the rising edge of the FlexLogic operand selected under this setpoint, all energy metering values (under ***Metering*** > ***Energy 1(X)*** > ***Energy***) are logged and reset to zero, and Reset Energy D/T is recorded and displayed.

The logged values are displayed as the Last Event Pos(Neg) WattHours and Last Event Pos(Neg) VarHours under ***Metering*** > ***Energy 1(X)*** > ***Energy Log***.

An application example could be monitoring of the total energy accumulated at the end of an event or a shift interval. An event/shift interval can be defined by the breaker status operand (open or closed) or, if applicable, by the operand derived by the Time of Day Timer element. If applicable, time-based shift schedules can be set in the Time of Day Timer element.

6.6 POWER SYSTEM

Path: ***Setpoints*** > ***System*** > ***Power System***

NOMINAL FREQUENCY

Range: 60 Hz, 50 Hz

Default: 60 Hz

The power system ***NOMINAL FREQUENCY*** is used as a default to set the digital sampling rate if the system frequency cannot be measured from available AC signals. This may happen if the signals selected for frequency tracking are not present, or a valid frequency is not detected. Before reverting to the nominal frequency, the frequency tracking algorithm holds the last valid frequency measurement for a safe period of time while waiting for the signals to reappear or for the distortions to decay.

PHASE ROTATION

Range: ABC, ACB

Default: ABC

The selection of the ***PHASE ROTATION*** setting must match the power system phase rotation. The phase sequence setting is required to properly calculate sequence components and power parameters. Note that this setting informs the relay of the actual system phase sequence, either ABC or ACB. CT and VT inputs on the relay labeled as a, b, and c, must be connected to system phases A, B, and C for correct operation.

REVERSE PHASE ROTATION

Range: Off, Any FlexLogic operand

Default: Off

This setting dynamically reverses the phase rotation set under Setpoints > System > Power System > Phase Rotation. For example, if the nominal phase rotation is ABC but the condition (FlexLogic operand) defined for reverse phase rotation is true (high), then the phase rotation will switch to ACB. The reverse phase rotation feature is only intended for use in special applications such as pumped storage schemes. As soon as the reverse phase rotation condition (FlexLogic operand) status becomes false (low), the phase rotation goes back to the nominal value set under Setpoints > System > Power System > Phase Rotation.

FREQUENCY TRACKING

Range: Disabled, Enabled

Default: Enabled

Frequency measurement is accomplished by measuring the time between zero crossings of the composite signal of three-phase bus voltages, line voltage or three-phase currents. The signals are passed through a low pass filter to prevent false zero crossings. ***FREQUENCY TRACKING*** utilizes the measured frequency to set the sampling rate for current and voltage which results in better accuracy for the Discrete Fourier Transform (DFT) algorithm for off-nominal frequencies.

The main frequency tracking source uses three-phase voltages. The frequency tracking is switched automatically to the alternative reference source, i.e., three-phase currents signal, if the frequency detected from the three-phase voltage inputs is declared invalid. The switching will not be performed if the frequency from the alternative reference signal is detected invalid. Upon detecting valid frequency on the main source, the tracking will be switched back to the main source. If a stable frequency signal is not available from any source, then the tracking frequency defaults to the nominal system frequency.

6.7 GENERATOR SETUP

Generator system setup allows you to enter generator rated values from the nameplate (provided by the generator manufacturer). These generator rated values are used to derive settings for protection and control functions within this device as well as to calculate other rated quantities.

Rated Full Load Current of the generator

$$\text{Rated FLA} = (\text{Rated MVAX} \times 10^{6}) / (\sqrt{3}\ \text{Rated Voltage Phase-to-phase})$$

Rated MW (Active power) of the generator

$$\text{Rated MW} = \text{Rated MVAX} \times \text{Sin}\ [\text{arcCos Rated Power Factor}]$$

Rated MVAR (Reactive power) of the generator (obtained by arc/inverse cosine function of rated power factor, and then its sine function)

$$\text{Rated MVAR} = \text{Rated MVAX} \times \text{Sin}\ [\text{arcCos Rated Power Factor}]$$

Path: ***Setpoints*** > ***System*** > ***Generator***

RATED MVA

Range: 0.001 to 2000.000 MVA in steps of 0.001 MVA

Default: 50.000 MVA

Enter the generator rated power rating in MVA. Typically this value is obtained from the generator nameplate or design datasheet. The rated MVA of the generator is used to derive other rated values such as rated MW, MVAR, etc.

RATED POWER FACTOR

Range: 0.00 to 0.99 pf in steps of 0.01 pf

Default: 0.85 pf

Enter the generator rated power factor (lagging) value. This value is used to derive other rated values such as rated MW, MVAR, etc.

RATED VOLTAGE PHASE-PHASE

Range: 0.0 to 30000.0 in steps of 0.1V

Default: 13800.0 V

Enter the generator rated phase-to-phase (or line-to-line) voltage in Volts.

AVERAGE CALC. PERIOD

Range: 1 to 90 min in steps of 1 min

Default: 15 min

This setting adjusts the period of time over which average values for generator records are calculated, such as the generator average load.

6.8 TRANSFORMER

Note:
The Transformer setup is only available for the 889 with Overall Differential Protection order code. Two-winding Transformer setup is used to compensate for transformer winding connection in overall differential protection.

Note:
An 889 unit ordered with the overall differential protection utilizes a two-winding transformer setup for GSU winding compensation.

Percent differential protection is the main protection for power transformers with regards to detecting all types of transformer internal fault. This protection is based on Kirchoff's law, where the sum of all currents flowing in and out of the protected equipment equals zero. However, when applying this law to the overall differential protection, one must keep in mind that the direct summation of the measured currents per-phase, does not automatically result into zero differential current. This is because:

1. The transformer voltage ratio defines different winding nominal currents
2. The winding CTs are not rated to the exact match of the winding nominal currents
3. Physically, the transformer windings are connected in Delta, Wye or Zig-Zag configuration, and they introduce a phase shift.
4. The transformer voltage ratio defines different winding nominal currents
5. The winding CTs are not rated to the exact match of the winding nominal currents
6. Physically, the transformer windings are connected in Delta or Wye configuration, and they introduce a phase shift.

For the correct performance of the overall percent differential protection, it is necessary to correct the magnitude and phase relationships of the CT secondary currents for each winding, in order to obtain near zero differential currents under normal transformer operating conditions. Traditionally, the phase shift between the currents from the transformer windings has been corrected by connecting the CTs from the Wye winding in Delta connection, and the CTs from the Delta winding in Wye connection. In the past, the magnitude correction has been accomplished using interposing CTs, or tapped relay windings. This however is not required any more when installing the relay.

The relay simplifies the process by performing the magnitude and phase shift compensations automatically (internally). Upon entering settings for the protected transformer and winding CT ratings, the relay automatically calculates and applies the correct magnitude scaling to the winding currents as well as applying the correct phase shift in order to prepare the currents for summation. To perform the correct currents compensation, all winding CTs need to be connected in Wye (polarity markings pointing away from the transformer).

6.9 BREAKERS

The status of each winding breaker is detected by monitoring the state of either one, or two contact inputs. We recommend you monitor the status of the breaker using both breaker auxiliary contacts 52a, and 52b. However using only one of them is also acceptable.

The breaker connection/disconnection to/from the power system is provided by monitoring the contact input ***BKR CONNECTED***. If the contact input is asserted, the breaker is considered to be connected to the primary system. When the breaker is determined to be disconnected, the breaker state is shown to be neither open, nor closed. The trolley is integrated with a circuit breaker (CB), which works as a Disconnect Switch. CB Trolley status based on the contact input selected under the ***CONNECTED*** and ***BKR TROLLEY*** setpoints.

Path: ***Setpoints*** > ***System*** > ***Breakers***

NAME

Range: Up to 13 alphanumeric characters

Default: BKRX

CONTACT INPUT 52a

Range: Off, Any FlexLogic operand

Default: Off

Selects the Contact Input connected to the Breaker auxiliary contact 52a.

CONTACT INPUT 52b

Range: Off, Any FlexLogic operand

Default: Off

Selects the Contact Input connected to the Breaker auxiliary contact 52b.

CONNECTED

Range: Off, Any FlexLogic operand

Default: Off

Select a contact input to show whether the breaker is connected (Racked-in, or disconnect switches switched-on), or disconnected (racked-out, or disconnect switches switched-off) from the system.

BKR TROLLEY

Range: Off, Any FlexLogic operand

Default: Off

Select a contact input to show whether the Breaker Trolley is connected or disconnected from the system.

TRIP RELAY SELECT

Range: Off, Any Output Relay

Default: Relay 1

This setting is typically available for two or more breaker applications. For single breaker applications, the setting is hidden and trip relay selection is defaulted to Relay 1.Any output relay from the list of available output relays can be programmed for breaker tripping action.

CLOSE RELAY SELECT

Range: Off, Relay X

Default: Relay 2

This setting is typically available for two or more breaker applications. For single breaker applications, the setting is hidden and close relay selection is defaulted to Relay 2.Any output relay from the list of available output relays can be programmed for breaker closing action.

Breaker status depending on availability of contacts 52a and 52b

52a Contact Configured	52b Contact Configured	Breaker Status	
		Open	Closed
Yes	Yes	52a contact open 52b contact closed	52a contact closed 52b contact open
Yes	No	52a contact open	52a contact closed
No	Yes	52b contact closed	52b contact open
No	No	Breaker Not Configured	Breaker Not Configured

Breaker status with both contacts 52a and 52b configured

52a Contact Configured	52b Contact Configured	Breaker Status
Off	On	BKR Opened
On	Off	BKR Closed
On	On	BKR Unknown State
Off	Off	BKR Unknown State

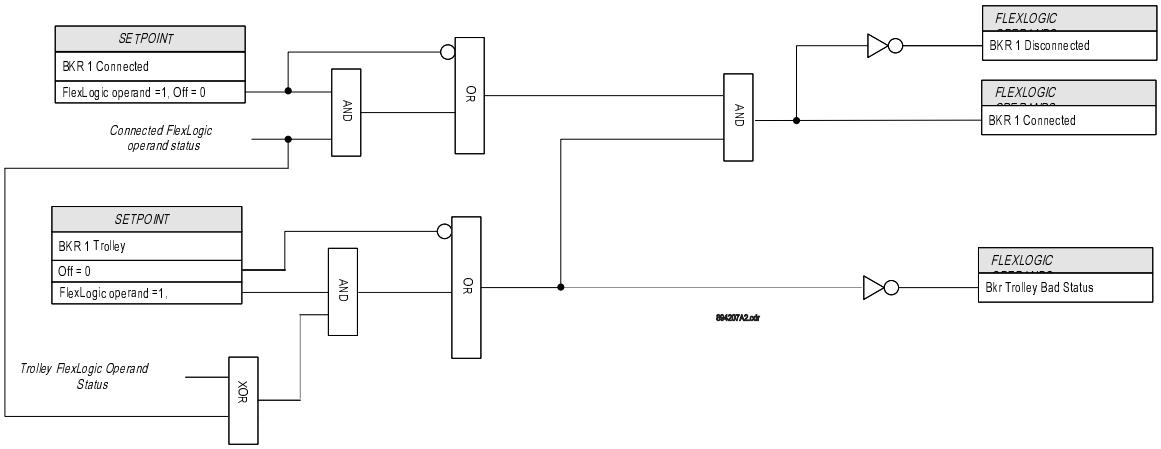

Figure 86: Breaker Connected/Disconnected (Racked-In/Racked-Out) Detection

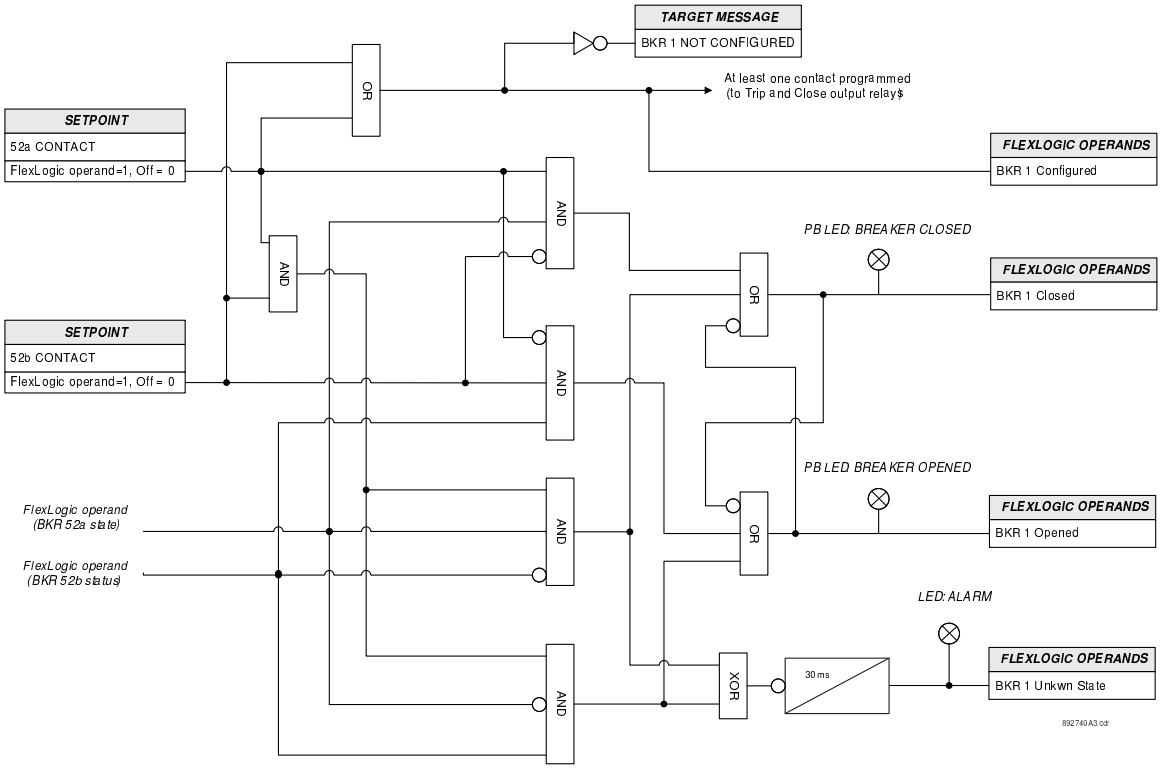

Figure 87: Breaker State Detection logic diagram

6.10 SWITCHES

The Single Line Diagram (SLD) relays can be configured with up to 9 disconnect switches. The disconnect switch detection is performed by monitoring the state/states of either one or preferably two contact inputs 89a and 89b. Monitoring the status of the switch using both auxiliary contacts 89a, and 89b is recommended, however using only one of them is also possible.When both contacts are programmed, the switch can be monitored for state discrepancy, i.e. both auxiliary contacts OFF, or both auxiliary contacts ON during operation. Discrepancy Alarm Delay can be programmed to reflect the transition of the switch during operation from Closed to Opened, and Opened to Closed. If no auxiliary contact discrepancy is detected after the time delay expires, the switch will be in one of its normal states, i.e. Opened or Closed. However, if contact inputs discrepancy is detected after the time delay expires, the relay will issue a `SW1(9) Discrepancy` target message and illuminate the ALARM LED. The switch discrepancy condition can be reset by the operand assigned under Reset Alarm setpoint, providing both contact inputs 89a and 89b show normal states on the relay.

Path: ***Setpoints*** > ***System*** > ***Switches*** > ***Switch 1(9)***

NAME

Range: 13 alphanumeric characters

Default: SW 1

Assign a user-defined name to the disconnect switch. This name is used in the SLD, flash messages related to disconnect switch 1, and the event recorder.

CONTACT INPUT 89a

Range: Off, Any FlexLogic operand

Default: Off

Select an operand (usually NO aux. contact wired to contact input in the relay) to reflect the status of the Disconnect Switch auxiliary contact 89a.

CONTACT INPUT 89b

Range: Off, Any FlexLogic operand

Default: Off

Select an operand (usually NC auxiliary contact wired to contact input in the relay) to reflect the status of the Disconnect Switch auxiliary contact 89b.

ALARM DELAY

Range: 0.000 to 6000.000 s in steps of 0.001 s

Default: 2.000 s

This setting specifies the required time interval to overcome transient disagreement between the 89a and 89b auxiliary contacts during disconnect switch operation. If transient disagreement still exists after this time has expired, SW1(9) Discrepancy FlexLogic operand is asserted for alarm and/or blocking purposes.

RESET ALARM

Range: Off, Any FlexLogic operand

Default: Off

Select an operand from the list of FlexLogic operands, which when asserted resets the Switch Discrepancy state. Please note that resetting the discrepancy alarm will work only after no discrepancy condition exists between the switch aux contacts 89a and 89b.

OPEN RELAY SELECT

Range: Off, Relay 1, ..., Relay X

Default: Off

This setpoints selects an output relay from the list of available output relays that is used to open the Disconnect Switch once an open command is issued either from the front panel or remotely. This output relay is controlled from the Switch Control menu.

CLOSE RELAY SELECT

Range: Off, Relay 1, ..., Relay X

Default: Off

This setpoint selects an output relay from the list of available output relays that is used to close the Disconnect Switch upon issued close command from either front panel or remotely. This output relay is controlled from Switch Control menu.

Note:
The selection of Output Relay for Open Relay Select and Close Relay Select has higher priority than other settings as follows: If an Output Relay is first set to `Operate`*"under a protection element for example, and then this same Output Relay is selected under either* ***Open Relay Select*** *or* ***Close Relay Select****, this Output Relay is automatically reverted to* `Do Not Operate` *and hidden from the menu of the protection element. Deselecting the Output Relay from* ***Open Relay Select*** *or* ***Close Relay Select*** *unhides the output in the menu of the protection element showing the setting value* `Do Not Operate`*.*

EVENTS

Range: Disabled, Enabled

Default: Enabled

This setting disables or enables the disconnect switch operation events.

TARGETS

Range: Disabled, Self-Reset, Latched

Default: Enabled

This setting disables or enables the disconnect switch operation Targets.

The logic for Switch configuration and the Open, and Close status is shown in the following tables.

Switch configuration with Open and Close status

Contact Input 89a setpoint programming	Contact Input 89b setpoint programming	SwitchStatus	
		Open	Closed
Yes	Yes	89a contact open 89b contact closed	89a contact closed 89b contact open
Yes	No	89a contact open	89a contact closed
No	Yes	89b contact closed	89b contact open
No	No	Not Configured	Not Configured

Switch status with both contacts 89a and 89b programmed

89a Contact Status	89b Contact Status	Disconnect Switch Status
Off	On	SW[X] Opened
On	Off	SW[X] Closed
On	On	SW[X] Intermittent, SW[X] Discrepancy
Off	Off	SW[X] Intermittent, SW[X] Discrepancy

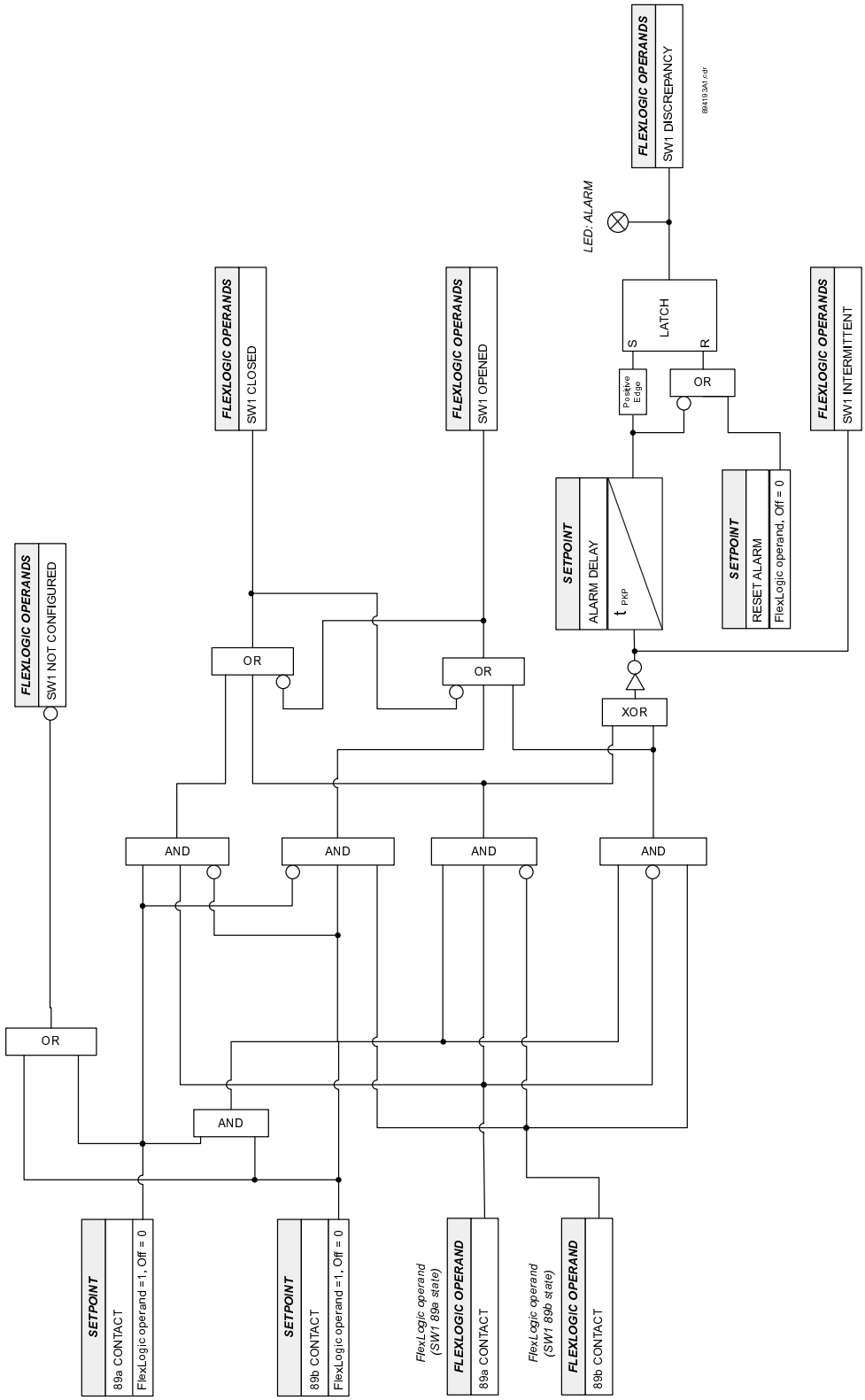

Figure 88: Disconnect Switch State Detection logic diagram

6.11 FLEXCURVES

The relay incorporates four programmable FlexCurves - FlexCurve A, B, C and D. The points for these curves are defined in the EnerVista D&I Setup software. User-defined curves can be used for Time Overcurrent protection in the same way as IEEE, IAC, ANSI, and IEC curves. Each of the four FlexCurves has 120-point settings for entering times to reset and operate, 40 points for reset (from 0 to 0.98 times the Pickup value) and 80 for operate (from 1.03 to 20 times the Pickup). This data is converted into two continuous curves by linear interpolation between data points.

Path: ***Setpoints*** > ***System*** > ***FlexCurves***

> *Note:*
> *Use EnerVista D&I Setup software to select, design or modify any of the Flexcurves*

Note:

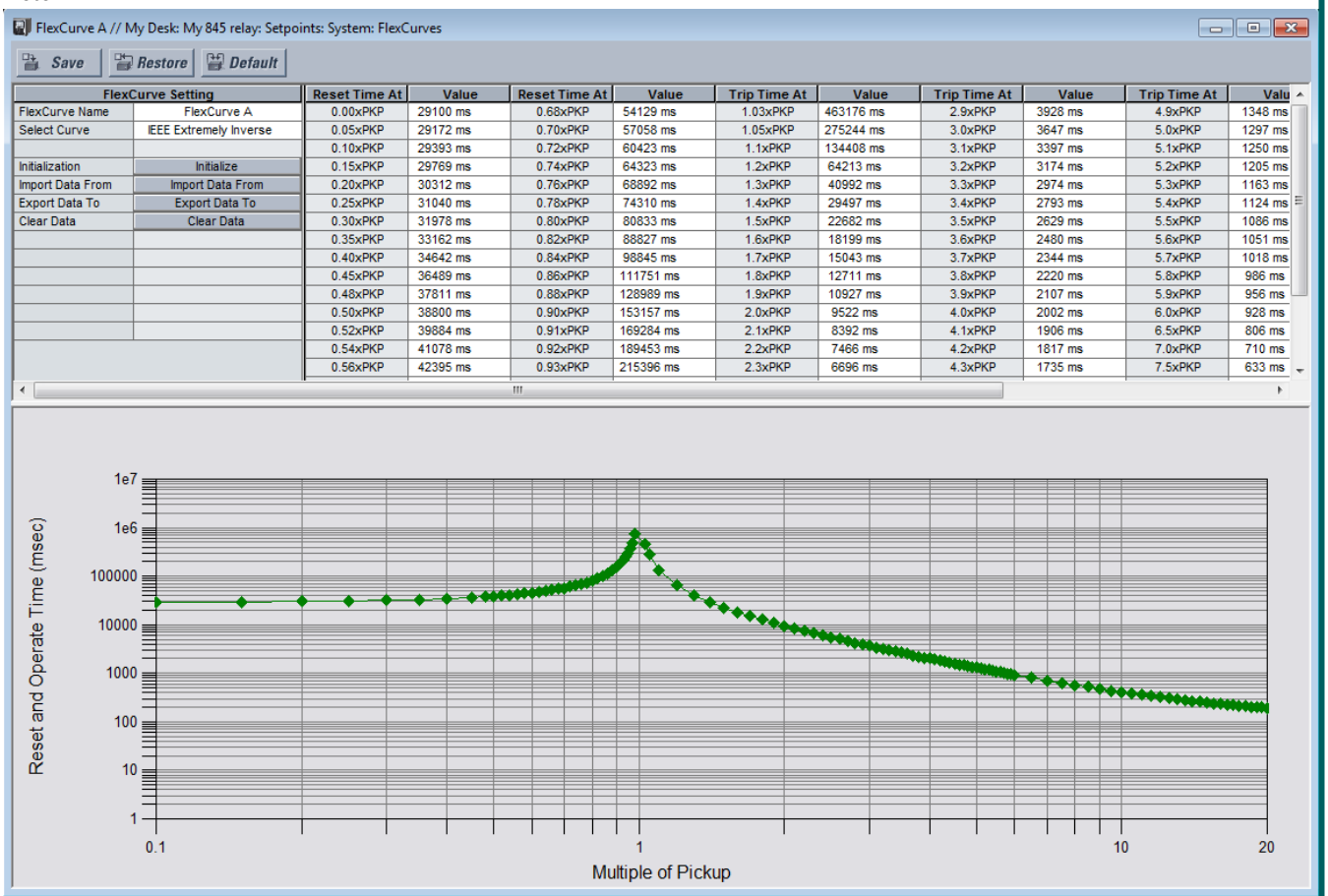

FlexCurve Setting		Reset Time At	Value	Reset Time At	Value	Trip Time At	Value	Trip Time At	Value	Trip Time At	Valu
FlexCurve Name	FlexCurve A	0.00xPKP	29100 ms	0.68xPKP	54129 ms	1.03xPKP	463176 ms	2.9xPKP	3928 ms	4.9xPKP	1348 ms
Select Curve	IEEE Extremely Inverse	0.05xPKP	29172 ms	0.70xPKP	57058 ms	1.05xPKP	275244 ms	3.0xPKP	3647 ms	5.0xPKP	1297 ms
		0.10xPKP	29393 ms	0.72xPKP	60423 ms	1.1xPKP	134408 ms	3.1xPKP	3397 ms	5.1xPKP	1250 ms
Initialization	Initialize	0.15xPKP	29769 ms	0.74xPKP	64323 ms	1.2xPKP	64213 ms	3.2xPKP	3174 ms	5.2xPKP	1205 ms
Import Data From	Import Data From	0.20xPKP	30312 ms	0.76xPKP	68892 ms	1.3xPKP	40992 ms	3.3xPKP	2974 ms	5.3xPKP	1163 ms
Export Data To	Export Data To	0.25xPKP	31040 ms	0.78xPKP	74310 ms	1.4xPKP	29497 ms	3.4xPKP	2793 ms	5.4xPKP	1124 ms
Clear Data	Clear Data	0.30xPKP	31978 ms	0.80xPKP	80833 ms	1.5xPKP	22682 ms	3.5xPKP	2629 ms	5.5xPKP	1086 ms
		0.35xPKP	33162 ms	0.82xPKP	88827 ms	1.6xPKP	18199 ms	3.6xPKP	2480 ms	5.6xPKP	1051 ms
		0.40xPKP	34642 ms	0.84xPKP	98845 ms	1.7xPKP	15043 ms	3.7xPKP	2344 ms	5.7xPKP	1018 ms
		0.45xPKP	36489 ms	0.86xPKP	111751 ms	1.8xPKP	12711 ms	3.8xPKP	2220 ms	5.8xPKP	986 ms
		0.48xPKP	37811 ms	0.88xPKP	128989 ms	1.9xPKP	10927 ms	3.9xPKP	2107 ms	5.9xPKP	956 ms
		0.50xPKP	38800 ms	0.90xPKP	153157 ms	2.0xPKP	9522 ms	4.0xPKP	2002 ms	6.0xPKP	928 ms
		0.52xPKP	39884 ms	0.91xPKP	169284 ms	2.1xPKP	8392 ms	4.1xPKP	1906 ms	6.5xPKP	806 ms
		0.54xPKP	41078 ms	0.92xPKP	189453 ms	2.2xPKP	7466 ms	4.2xPKP	1817 ms	7.0xPKP	710 ms
		0.56xPKP	42395 ms	0.93xPKP	215396 ms	2.3xPKP	6696 ms	4.3xPKP	1735 ms	7.5xPKP	633 ms

Figure 89: Flexcurve setpoints

The following table for FlexCurves A, B, C, and D details the 120 points as well as the characteristic for each of them, and a blank cell to write the time value when the operation (for $I > I_{pickup}$) or the reset (for $I < I_{pickup}$) is required.

RESET TIME ms		RESET TIME ms		OPERATE TIME ms		OPERATE TIME ms		OPERATE TIME ms		OPERATE TIME ms	
0.00		0.68		1.03		2.9		4.9		10.5	
0.05		0.70		1.05		3.0		5.0		11.0	
0.10		0.72		1.1		3.1		5.1		11.5	
0.15		0.74		1.2		3.2		5.2		12.0	
0.20		0.76		1.3		3.3		5.3		12.5	
0.25		0.78		1.4		3.4		5.4		13.0	
0.30		0.80		1.5		3.5		5.5		13.5	
0.35		0.82		1.6		3.6		5.6		14.0	
0.40		0.84		1.7		3.7		5.7		14.5	
0.45		0.86		1.8		3.8		5.8		15.0	
0.48		0.88		1.9		3.9		5.9		15.5	
0.50		0.90		2.0		4.0		6.0		16.0	
0.52		0.91		2.1		4.1		6.5		16.5	
0.54		0.92		2.2		4.2		7.0		17.0	
0.56		0.93		2.3		4.3		7.5		17.5	
0.58		0.94		2.4		4.4		8.0		18.0	
0.60		0.95		2.5		4.5		8.5		18.5	
0.62		0.96		2.6		4.6		9.0		19.0	
0.64		0.97		2.7		4.7		9.5		19.5	
0.66		0.98		2.8		4.8		10.0		20.0	

The first two columns (40 points) correspond to the RESET curve. The other 4 columns, with 80 points in total, correspond to the OPERATE curve. The reset characteristic values are between 0 and 0.98xPKP, and the operation values are between 1.03 and 20xPKP.

The final curve is created by means of a linear interpolation from the defined points. This is a separate process for the RESET and the OPERATE curve.

The definition of these points is performed in a separate module from the relay, using a configuration program included in EnerVista D&I Setup software, which incorporates a graphical environment for viewing the curve, thus making it easy to create.

Note:
*The relay using a given FlexCurve applies linear approximation for times lying between the user-entered points. Therefore, special care must be taken when setting the points close to a Pickup multiple of 1; that is, 0.97*Ipickup and 0.98*Ipickup should be set to a similar value as 1.03*Ipickup. Otherwise, the thermal model may incorrectly estimate the TCU% level resulting in undesired behavior.*

FLEXCURVE A, B, C, D CONFIGURATION WITH EnerVista D&I Setup software

EnerVista D&I Setup software allows for easy configuration and management of FlexCurves and their associated data points. Prospective FlexCurves can be configured from a selection of standard curves to provide the best approximate fit, then specific data points can be edited afterwards. Alternately, curve data can be imported from a specified file (.csv format) by selecting the Import Data From setting.

Curves and data can be exported, viewed, and cleared by clicking the appropriate buttons. FlexCurves A, B, C, and D are customized by editing the operating time (ms) values at pre-defined per-unit current multiples. Note that the pickup multiples start at zero (implying the “reset time”), operating time below Pickup, and operating time above Pickup.

CHAPTER 7

INPUT AND OUTPUT SETPOINTS

7.1 CHAPTER OVERVIEW

This chapter describes the Device setpoint menu settings in detail.

This chapter contains the following sections:

Chapter Overview 234

Inputs 235

Outputs 246

7.2 INPUTS

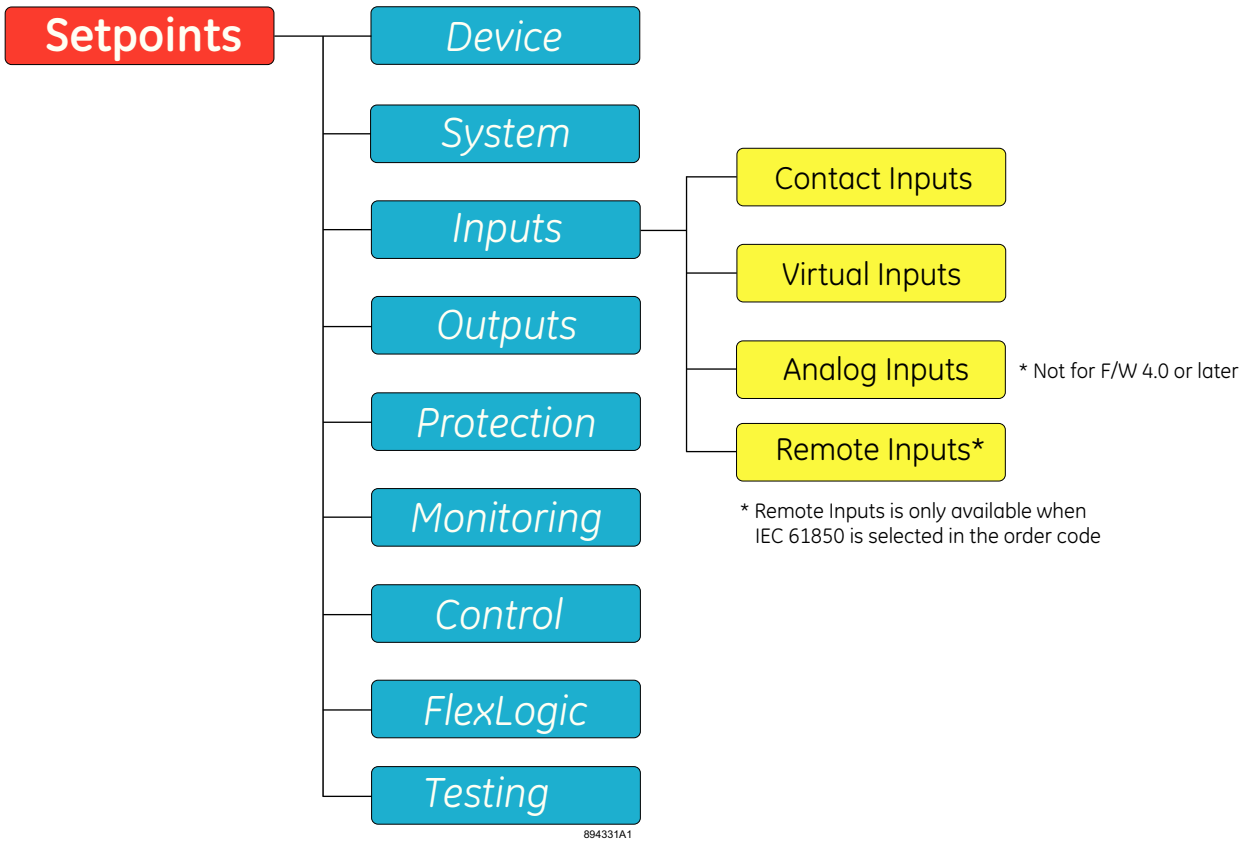

Figure 90: Inputs Display Hierarchy

7.2.1 CONTACT INPUTS

The relay is equipped with a number of Contact Inputs, specified by the Order Code. These can be used to provide a variety of functions such as for circuit breaker control, external trips, blocking of protection elements, etc. Contact inputs accept wet and dry input signals. A wet type contact input signal requires an external DC voltage source. A dry type contact input signal uses an internal DC voltage source. Depending on the DC source level, you can select the voltage threshold (17V, 33V, 84V, 166V). The Contact Inputs can be located on the HV I/O and Arc Flash cards located on slots B or C or F or G or H or all.

> *Note:*
> *The maximum load current that can be delivered by the relay +24 V voltage supply is 100 mA. When the internal +24 V supply is used, the current limitations of the 24V supply must be considered.*

The Contact Inputs are either open or closed with a programmable debounce time to prevent false operation from induced voltage. The debounce time is adjustable as per manufacturer specifications.

A raw status is scanned for all Contact Inputs synchronously at the constant rate of one protection pass (1/8 cycle) as shown in the figure below. The DC input voltage is compared to a user-settable threshold. A new Contact Input state must be maintained for a user-configurable debounce time in order for the relay to validate the new contact state. In the figure below, the debounce time is set at 2.5 ms; thus the 3rd sample in a row validates the change of state (mark no. 2 in the diagram). Once validated (debounced), the new state will be declared and a FlexLogic operand will be asserted at the time of a new protection pass. A time stamp of the first sample in the sequence that validates the new state is used when logging the change of the Contact Input into the Event Recorder (mark no. 1 in the diagram).

Protection and control elements, as well as FlexLogic equations and timers, are executed eight times in a power system cycle. The protection pass duration is controlled by the frequency tracking mechanism. The FlexLogic operand reflecting the debounced state of the contact is updated at the protection pass following the debounce (marked no. 2 on the figure below). The update is performed at the beginning of the protection pass so all protection and control functions, as well as FlexLogic equations, are fed with the updated states of the Contact Inputs.

The FlexLogic operand response time to the Contact Input change is related to the debounce time setting plus up to one protection pass (variable and depending on system frequency if frequency tracking enabled). For example, 8 protection passes per cycle on a 60 Hz system correspond to a protection pass every 2.1 ms. With a contact debounce time setting of 3.0 ms, the FlexLogic™ operand-assert time limits are: 4.2 + 0.0 = 4.2 ms and 4.2 + 2.1 = 6.3 ms. The 4.2 ms is the minimum protection pass period that contains a debounce time, 3.0 ms.

Regardless of the contact debounce time setting, the Contact Input event is time-stamped with 1 protection pass accuracy using the time of the first scan corresponding to the new state (mark no. 1 below). Therefore, the time stamp reflects a change in the DC voltage across the Contact Input terminals that was not accidental as it was subsequently validated using the debounce timer. The debounce algorithm is symmetrical: the same procedure and debounce time are used to filter the LOW-HIGH (marks no.1 and 2 in the figure below) and HIGH-LOW (marks no. 3 and 4 below) transitions.

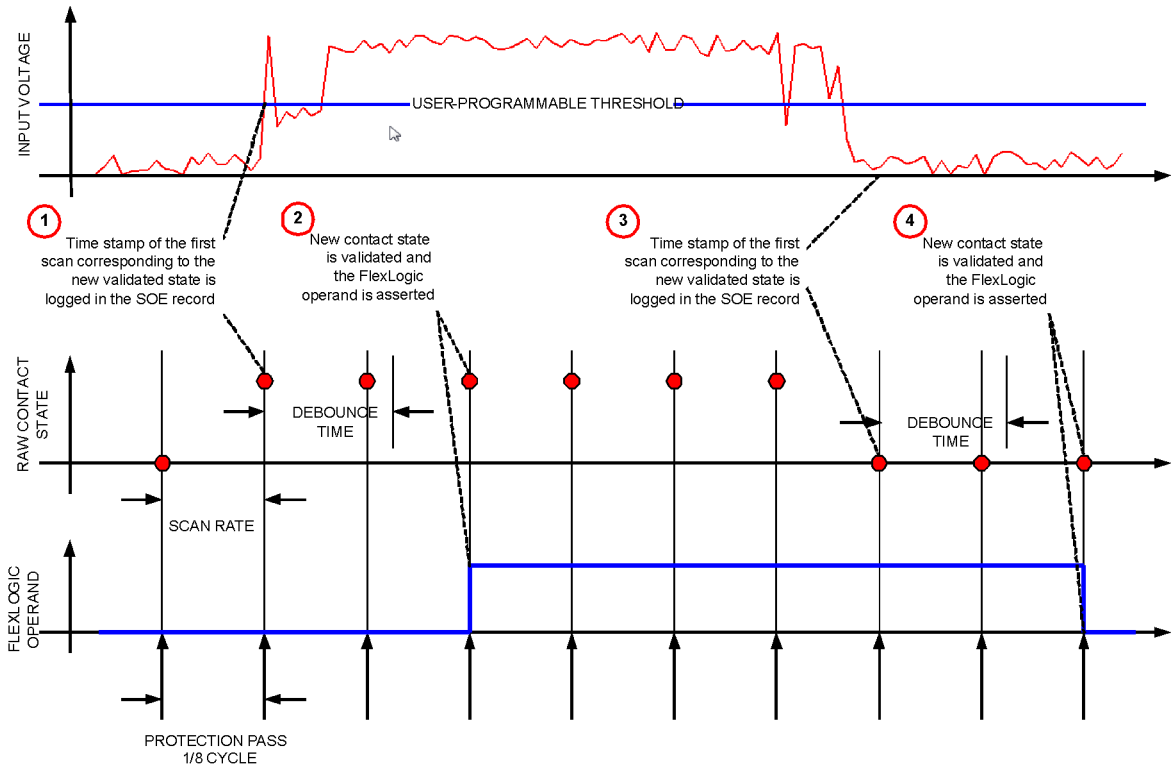

Figure 91: Contact Input Debouncing Mechanism and Time-stamping Sample Timing

Path: ***Setpoints*** > ***Inputs*** > ***Contact Inputs***

The Contact Inputs menu contains configuration settings for each Contact Input as well as voltage threshold for all Contact Inputs.

..\Inputs\Contact Inputs				
Item Name				
CI Voltage Threshold				
Contact Input 1				
Contact Input 2				
Contact Input 3				
Contact Input 4				
Contact Input 5				
Contact Input 6				
Contact Input 7				
Contact Input 8				
Contact Input 9				
Contact Input 10				
CI DC Volt	CI 1	CI 2	CI 3	>>

Path: ***Setpoints*** > ***Inputs*** > ***Contact Inputs*** > ***CI Voltage Threshold***

Depending on the order code, Voltage Threshold value can be configured for all the Contact Inputs (Slot F/G/H with order code A or M or F) or for each group of Contact Inputs (Slot F/G/H with order code B or K and Slot B/C with order code C).

As an example, the following section shows description of the settings for Slot F with order code A, Slot G with order code B and Slot B with order code C.

..\Contact Inputs\CI Voltage Threshold		
Item Name	Value	Unit
Voltage Threshold/Slot F	33	Vdc
Voltage Threshold /G13-G17	33	Vdc
Voltage Threshold /G19-G23	33	Vdc
Voltage Threshold/B1-B5	33	Vdc
Voltage Threshold /B7-B11	33	Vdc
Voltage Threshold /B13-B17	33	Vdc
CI DCVolt		

Contact input card type A allocated at Slot F requires one Voltage Threshold configuration for all the contact inputs. Contact input card type B allocated at Slot G has two groups of five contact inputs and therefore requires two Voltage Threshold settings. While Contact input card type C allocated at Slot B has three groups of five contact inputs, and therefore requires three Voltage Threshold settings.

Each Voltage Threshold setting is distinct by the slot or terminal numbers. For example: Voltage Threshold/Slot F specifies the threshold setting of all the contact inputs in Slot F with order code A; while Voltage Threshold/G13-G17 specifies the threshold setting for group of five contact inputs with terminals G13 to G17.

Upon start-up, the relay processor determines (from an assessment of the installed modules) which Contact Inputs are available, then displays settings for only these inputs.

VOLTAGE THRESHOLD /[X]

Range: 17, 33, 84, 166 VDC

Default: 17 VDC

The setting determines the minimum voltage required to detect a closed Contact Input. The value is selected according to the following criteria: 17 for 24 V sources, 33 for 48 V sources, 84 for 110 to 125 V sources and 166 for 250 V sources.

Note:
For internal wetting set the Voltage Threshold to 17V.

Note:
When thresholds above 17V are selected, the internal +24V is disabled.

Path: ***Setpoints*** > ***Inputs*** > ***Contact Inputs*** > ***Contact Input X***

NAME

Range: Up to 13 alphanumeric characters

Default: CI 1

An alphanumeric name may be assigned to a Contact Input for diagnostic, setting, and event recording purposes. The CI X ON (Logic 1) FlexLogic operand corresponds to Contact Input X being closed, while CI X OFF corresponds to Contact Input X being open.

DEBOUNCE TIME

Range: 0.0 to 16.0 ms in steps of 0.5 ms

Default: 10.0 ms

The Debounce Time defines the time required for the contact to overcome ‘contact bouncing’ conditions. As this time differs for different contact types and manufacturers, set it as a maximum contact debounce time (per manufacturer specifications) plus some margin to ensure proper operation.

EVENTS

Range: Enabled, Disabled

Default: Enabled

For example, to use Contact Input F1 as a status input from the breaker 52b contact, to seal-in the trip relay and record it in the Event Records menu, make the following settings changes:

CONTACT INPUT 1 NAME: `52b`

CONTACT INPUT 1 EVENTS: `Enabled`

Note:
The 52b contact is closed when the breaker is open and open when the breaker is closed.

7.2.2 VIRTUAL INPUTS

The relay is equipped with 64 Virtual Inputs that can be individually programmed to respond to input signals from the keypad or from communications protocols. This has the following advantages over Contact Inputs only:

- The number of logic inputs can be increased without introducing additional hardware.
- Logic functions can be invoked from a remote location over a single communication channel.
- The same logic function can be invoked both locally via contact input or front panel keypad, and/or remotely via communications.
- Panel switches can be replaced entirely by virtual switches to save cost and wiring.

All Virtual Input operands are defaulted to `Off` (logic 0) unless the appropriate input signal is received.

Path: ***Setpoints*** > ***Inputs*** > ***Virtual Inputs*** > ***Virtual Input***

FUNCTION

Range: Disabled, Enabled

Default: Disabled

If this setting is disabled, the input is OFF (logic 0) regardless of any attempt to alter the input. If enabled, the input operates as shown on the logic diagram below, and generates output FlexLogic operands in response to received input signals and the applied settings.

NAME

Range: Up to 13 Alphanumeric Characters

Default: VI 1

An alphanumeric name may be assigned to a Virtual Input for diagnostic, setting, and event recording purposes.

TYPE

Range: Latched, Self-reset

Default: Latched

There are two types of operation: self-reset and latched. If VIRTUAL INPUT x TYPE is “Self-Reset,” when the input signal transits from OFF to ON the output operand will be set to ON for only one evaluation of the FlexLogic equations, then return to OFF. If set to “Latched,” the virtual input sets the state of the output operand to the same state as the most recent received input.

The self-reset operating mode generates the output operand for a single evaluation of the FlexLogic equations (i.e., a pulse of one protection pass). If the operand is to be used anywhere other than internally in a FlexLogic equation, it will likely have to be lengthened in time. A FlexLogic timer with a delayed reset time can perform this function.

EVENTS

Range: Enabled, Disabled

Default: Enabled

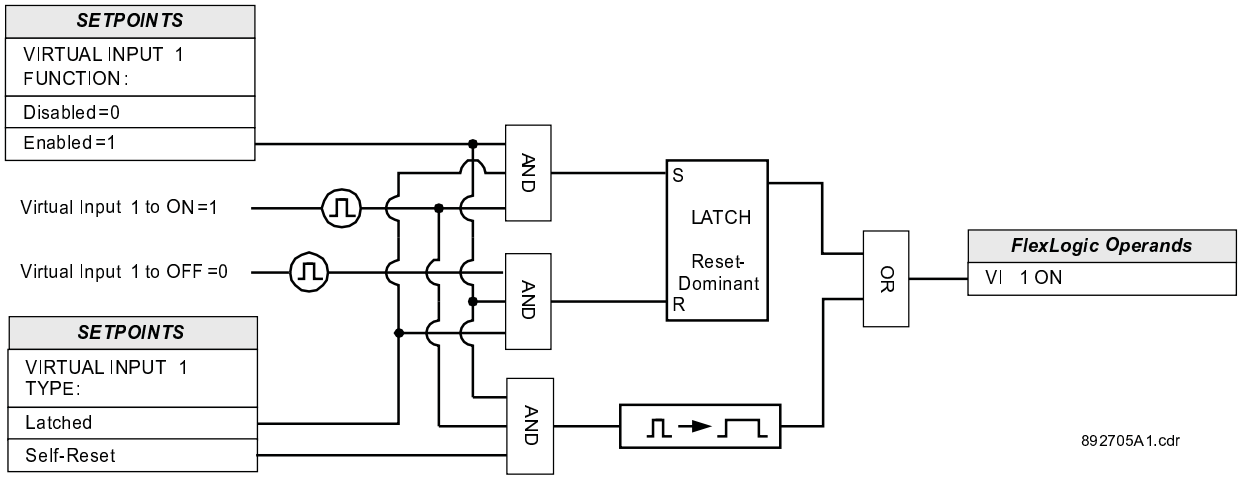

Figure 92: Virtual Inputs Scheme Logic

7.2.3 ANALOG INPUTS

The relay can monitor any external quantity from the DcmA transducers such as vibration, field current, pressure, tap position etc., using analog inputs. Any one of the standard transducer output ranges: 0 to 1 mA, 0 to 5 mA, 0 to 10mA, 0 to 20 mA, or 4 to 20 mA can be connected to the Analog Input terminals. Polarity of these inputs must be observed for proper operation. The analog input circuitry is isolated as a group with the analog output circuitry and the RTD circuitry, only one ground reference is used for the three circuits. Transducers limit this isolation to ±36 V with respect to the relay's safety ground.

Depending upon the order code, the relay supports one optional DC analog card. The analog card has 4 analog inputs and 7 analog outputs. For each element, when the measured analog input quantity exceeds the pickup level for longer than the associated time delay, the relay can be configured to cause an alarm, or trip. The element will drop out only when the user-configured dropout ratio has been met.

> *Note:*
> *The connected analog input is still read and displayed in METERING /ANALOG INPUTS if the trip function or alarm function is disabled, and the Analog Input is not disabled.*

Path: ***Setpoints*** > ***Inputs*** > ***Analog Inputs*** > ***Analog Input 1(X)***

Settings

FUNCTION

Range: Disabled, Enabled

Default: Disabled

This setting enables or disables the Analog Input function.

FUNCTION

Range: Disabled, Enabled

Default: Disabled

This setting disables the Analog Input function or enables it for any generic application or any specific application i.e., Tap Position. Upon selecting a specific application its value is also displayed in the Transformer metering menu.

> *Note:*
> *In the Tap Changer Setup, DcmA input is selected as* `Tap Detection Input` *and Analog Input 1 Function is set as* `Tap Position`*. All other settings for Analog Input 1 are hidden.*

FUNCTION

Range: Disabled, Enabled, Bearing Vibration, Excitation Current

Default: Disabled

This setting disables the Analog Input function or enables it for any generic application or any specific application such as Bearing Vibration or Excitation Current. Upon selecting a specific application, its value is also displayed in the Generator metering menu.

NAME

Range: Any combination of 13 Characters

Default: Anlp 1

This setting allows the assignment of symbolic names to each analog input. The length is limited to 13 characters.

UNITS

Range: Any combination of 6 Characters

Default: units

This setting allows the assignment of symbolic names to the engineering units. The length is limited to 6 characters.

RANGE

Range: 0 to 1 mA, 0 to 5 mA, 0 to 10 mA, 0 to 20 mA, 4 to 20 mA

Default: 0 to 1 mA

This setting provides the selection for the analog input range.

MIN VALUE

Range: -500000 to 500000 units in steps of 1 unit

Default: 0

For the ***MINIMUM VALUE*** setpoint, enter the value which corresponds to the minimum output value of the transducer. For example, if a temperature transducer which outputs 4 to 20 mA for temperatures 0 to 250°C is connected to the analog input, then enter “0” for the MINIMUM VALUE. The relay then interprets 4 mA as representing 0°C. Intermediate values between the minimum and maximum are scaled linearly.

MAX VALUE

Range: -500000 to 500000 units in steps of 1 unit

Default: 0

For the MAXIMUM VALUE setpoint, enter the value which corresponds to the maximum output value of the transducer. For example, if a temperature transducer which outputs 4 to 20 mA for temperatures 0 to 250°C is connected to the analog input, then enter `250` for the MAXIMUM VALUE. The relay then interprets 20 mA as representing 250°C. Intermediate values between the minimum and maximum are scaled linearly.

TRIP FUNCTION

Range: Disabled, Trip, Configurable

Default: Disabled

Selecting the Trip or Configurable setting enables the Trip function of the analog input. If Disabled is selected, the main function still remains enabled and reads the meter value.

TRIP TYPE

Range: Over, Under

Default: Over

This setting determines if pickup occurs when the analog input is over or under the programmed threshold.

TRIP PICKUP

Range: -500000 to 500000 units in steps of 1 unit

Default: 20

This setpoint provides the trip pickup level in the engineering units defined in the setting.

TRIP DROPOUT RATIO

Range: 2 to 20 in steps of 1%

Default: 5%

This setting represents the variation of pickup value, in percentage of pickup, at which the element will effectively drop out. The drop out ratio is defined as follows:

Drop Out = pickup – pickup * dropout ratio /100, when TRIP TYPE is Over

Drop Out = pickup + pickup * dropout ratio /100, when TRIP TYPE is Under

For example, if the pickup level is 5000 µA, ***TRIP TYPE*** is set to `Over` and ***DROPOUT RATIO*** set to `10%`, the actual dropout will be 4500 µA. Conversely, if the ***TRIP TYPE*** is `Under` with the same dropout ratio, the actual dropout will be 5500 µA.

µA, ***TRIP TYPE*** is set to `Over` and ***DROPOUT RATIO*** set to `10%`, the actual dropout will be 4500 µA. Conversely, if the ***TRIP TYPE*** is `Under` with the same dropout ratio, the actual dropout will be 5500 µA.

TRIP PICKUP DELAY

Range: 0 to 600 s in steps of 1 s

Default: 2

This setpoint will operate if the trip pickup condition is maintained for a longer time than the delay time set here.

TRIP DROPOUT DELAY

Range: 0 to 600 s in steps of 1 s

Default: 0

This setpoint selects a fixed time interval to delay dropping out the output signal after being generated.

ALARM FUNCTION

Range: Disabled, Alarm, Latched Alarm

Default: Disabled

The selection of Alarm or Latched Alarm setting enables the alarm function.

ALARM TYPE

Range: Over, Under

Default: Over

This setting determines if alarm pickup will occur when the analog input is over or under the programmed threshold.

ALARM PICKUP

Range: -500000 to 500000 units in steps of 1 unit

Default: 10

This setpoint provides the alarm pickup level in engineering units as defined in the setting.

ALARM DROPOUT RATIO

Range: 2 to 20 in steps of 1%

Default: 5%

This setting represents the variation of pickup value, in percentage of pickup, at which the alarm element will effectively drop out. The drop out ratio is defined as follows:

Drop Out = pickup – pickup * dropout ratio /100, when ALARM TYPE is Over

Drop Out = pickup + pickup * dropout ratio /100, when ALARM TYPE is Under

For example, if the pickup level is 5000 µA, ***ALARM TYPE*** is set to `Over` and ***DROPOUT RATIO*** set to `10%`, the actual dropout will be 4500 µA. Conversely, if the ***ALARM TYPE*** is `Under` with the same dropout ratio, the actual dropout will be 5500 µA.

µA, ***ALARM TYPE*** is set to `Over` and ***DROPOUT RATIO*** set to `10%`, the actual dropout will be 4500 µA. Conversely, if the ***ALARM TYPE*** is `Under` with the same dropout ratio, the actual dropout will be 5500 µA.

ALARM PICKUP DELAY

Range: 0 to 600 s in steps of 1 s

Default: 2

This setpoint will operate the element if the alarm pickup condition is maintained for a longer time than the delay time set here.

ALARM DROPOUT DELAY

Range: 0 to 600 s in steps of 1 s

Default: 0

This setpoint selects a fixed time interval to delay dropping out the output signal after being generated.

BLOCK

Range: Any FlexLogic operand

Default: Off

EVENTS

Range: Disabled, Enabled

Default: Enabled

This setting enables or disables the events of the Analog Input function.

TARGETS

Range: Disabled, Self-Reset, Latched

Default: Latched

The selection of the Self-Reset or Latched setting enables the targets of the Analog Input function.

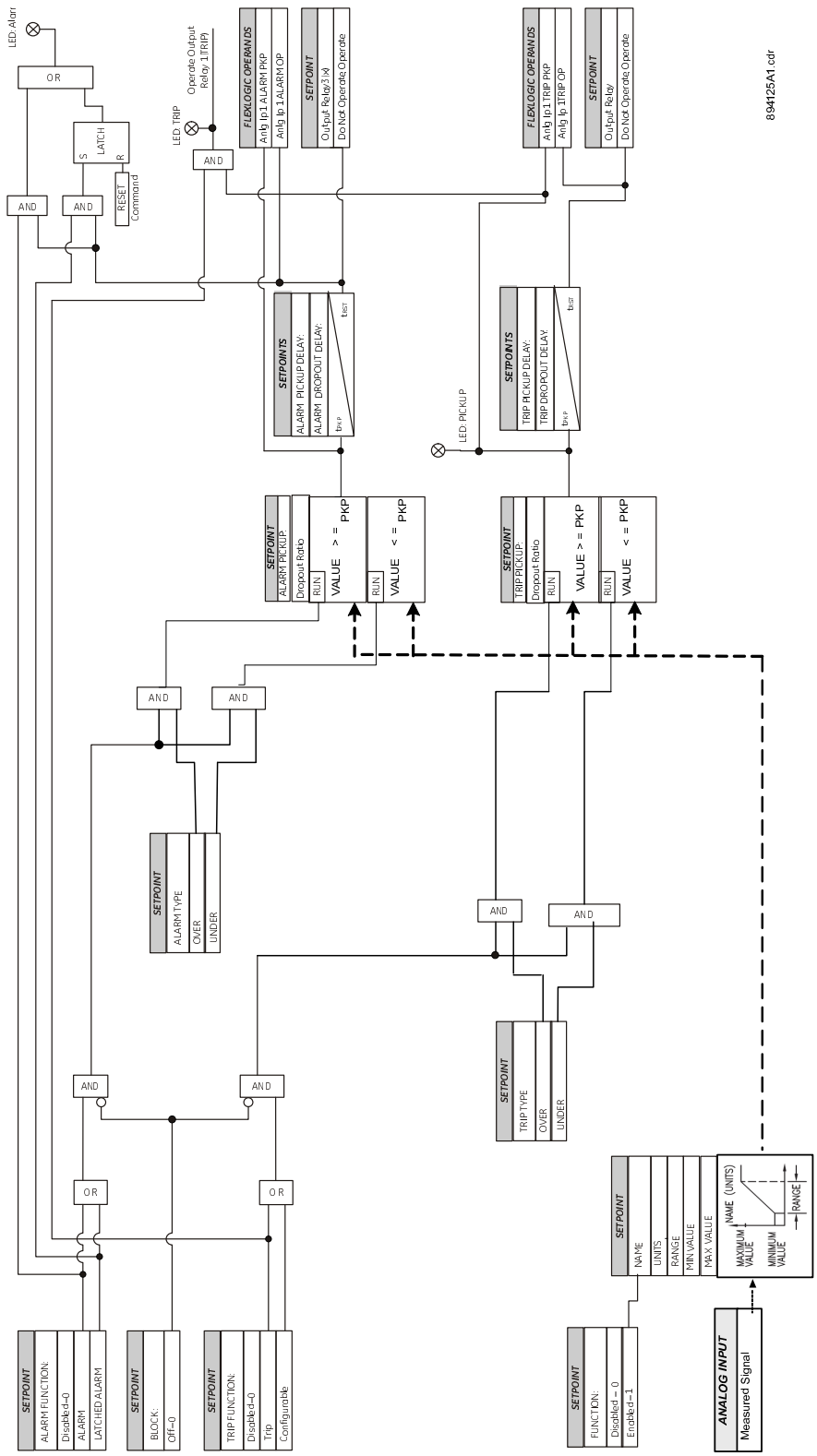

Figure 93: Analog Input Threshold Logic Diagram

7.2.4 REMOTE INPUTS

Remote inputs provide a means of exchanging digital state information between Ethernet-networked devices supporting IEC 61850. Remote inputs that create FlexLogic operands at the receiving relay are extracted from GOOSE messages originating in remote devices.

Remote input 1 must be programmed to replicate the logic state of a specific signal from a specific remote device for local use. The programming is performed by the three settings shown in the *Virtual Inputs* section.

Path: ***Setpoints*** > ***Inputs*** > ***Remote Inputs***

NAME

Range: Up to 13 Alphanumeric Characters

Default: VI 1

An alphanumeric name may be assigned to a Remote Input for diagnostic, setting, and event recording purposes.

EVENTS

Range: Enabled, Disabled

Default: Enabled

This setting enables event generation whenever ***Remote Input Status*** is updated.

7.3 OUTPUTS

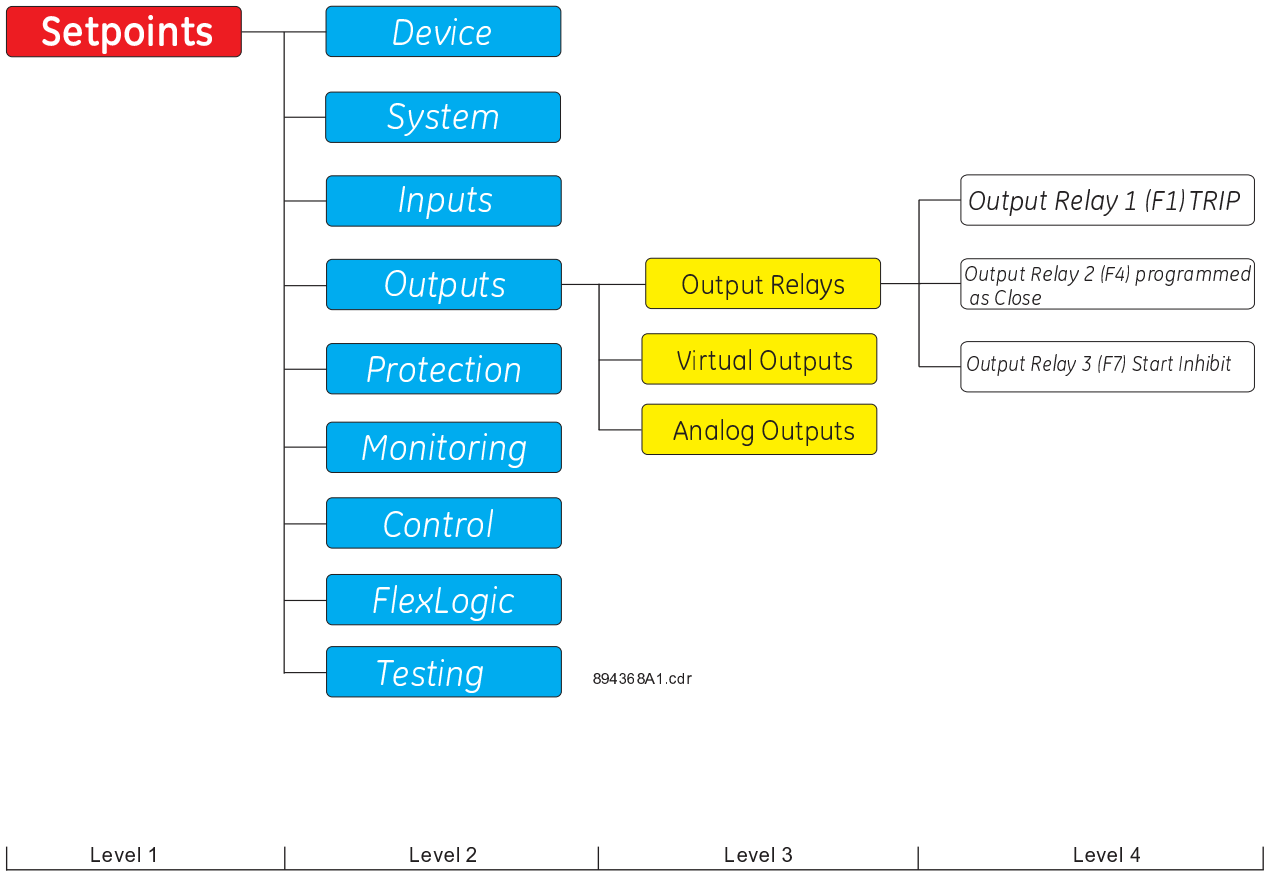

Figure 94: Outputs Display Hierarchy

7.3.1 OUTPUT RELAYS

The relay is equipped with a number of electromechanical output relays specified at the time of ordering. Each of the available modules for slot F provides 5 contact outputs the first two of which are designated as Trip and Close (Relay 1 (Trip), Relay 2 (Close). The Trip and Close relays have fixed operating characteristics as they depend on feedback from the switching device for resetting. These relays can be triggered by the protection elements with functions configured as `Trip`. The second relay can also be used as an auxiliary relay (user selected). It is labeled **Close/Aux**.

TRIP AND CLOSE RELAYS

Operation of these switching device control relays is designed to be controlled by the state of the switching device as monitored by a 52a contact, 52b contact, or both.

- The Trip and Close relays reset after the switching device is detected in a state corresponding to the command. When a command is sent to one of these special relays, it remains operated until the requested change of the switching device state is confirmed and the initiating condition has reset.
- If the command resets without a change of the switching device state, the output relay is reset after a default interval of 2 seconds.
- If neither of the switching device auxiliary contacts 52a nor 52b is programmed to a logic input, the Trip Relay resets after a default interval of 100 ms after the initiating input resets. The Close Relay is reset after 200 ms. If a delay is programmed for the Trip or Close contact seal-in time, then this delay is added to the reset time. Note that the default setting for the seal-in time is 100 ms.

The Trip and Close relay operation follows the logic described above only if the Relay Type setpoint selected is Pulsed. If the selection is Latched, the relay is energized by any trip or open command and remains energized upon element dropout. Latched auxiliary outputs can be reset with a reset command. If the Self-reset type is selected, the output relay is energized when the corresponding element operates and it stays energized until the element drops out.

7.3.1.1 RELAY SELECTED FOR BREAKER TRIP

Path:***Setpoints*** > ***Outputs*** > ***Output Relays*** > ***Aux Relay 1***

NAME

Range: Up to 13 alphanumeric characters

Default: Trip

The setpoint is used to name the Trip relay by selecting up to 13 alphanumeric characters.

SEAL-IN TIME (displayed only if Type=Pulsed)

Range: 0.00 to 9.99 s in steps of 0.01 s

Default: 0.10 s

This setting defines the time to be added to the Reset time of Relay 1 “Trip” output, thus extending its pulse width. This is useful for those applications where the 52 contacts reporting the breaker state are faster than the 52 contacts that are responsible for interrupting the coil current.

BLOCK

Range: Disabled, Any FlexLogic operand

Default: Disabled

This setting defines a Block to the Trip output relay. When the selected input is asserted, the Trip output relay is blocked.

OPERATE

Range: Off, On, Any FlexLogic operand

Default: Off

This setpoint provides a selection of any operand from the list of FlexLogic or communications, which can be used to energize the Trip output relay.

When set to On, the output relay is constantly asserted (On=1).

When set to Off and no FlexLogic operand is selected, the output relay operates as set in individual protection elements.

> *Note:*
> *Setting OPERATE to On supersedes individual protection function settings.*

TYPE

Range: Self-Reset, Latched, Pulsed

Default: Pulsed

This setting defines the sequence type of the Trip output relay. The functionality is described in the *Outputs* section.

OPERATION

Range: Non-Failsafe, Failsafe

Default: Non-Failsafe

Failsafe operation causes the output relay to be energized when the Trip condition signal is low and de-energized when the same signal is high. A failsafe relay also changes state (if not already activated by an operand driving this output relay) when control power is removed. Conversely a non-failsafe relay is de-energized in its normal non-activated state and will not change state when control power is removed (if not already activated by a protection element).

EVENTS

Range: Disabled, Enabled

Default: Enabled

> *Note:*
> *When the setpoint Function in the protection element menu is set to "Trip", the output relays selected under the Breaker menu for breaker tripping need to be re-selected from the protection element menu. These output relays will not be operational even if selected to operate from the protection element menu, if the function is set to "Alarm", "Latched Alarm", or "Configurable".*

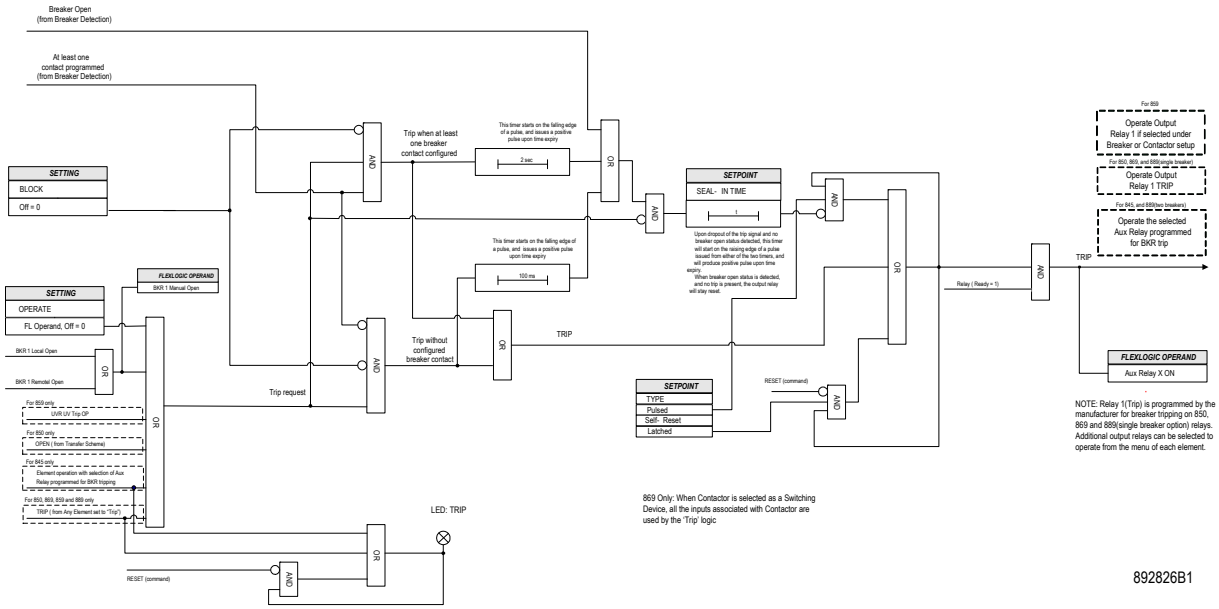

Figure 95: Relay Selected for Breaker Trip

7.3.1.2 RELAY SELECTED FOR BREAKER CLOSE

Path:***Setpoints*** > ***Outputs*** > ***Output Relay***

Output Relay 2 (F4) is labeled CLOSE/AUX on the wiring diagram. As suggested by that name, it can be used as a Close relay or an Auxiliary relay. This selection is made at ***Setpoints > System > Breakers (Contactor) > Breakers 1 (Contactor 1) > Close Relay Select***. If the selected value of the ***CLOSE RELAY SELECT*** setting is `Off`, Output Relay 2 functions as an Auxiliary relay. If the selected value is `Relay 2`, Output Relay 2 functions as a Close relay.

The default value is `Off`. The description below applies to Relay 2 *Close* functionality. For the Relay 2 *auxiliary* functionality; see the Auxiliary Relays generic logic figure.

Path: Setpoints > Outputs > Output Relays > Aux Relay 2 (Close)

> *Note:*
> *The output relays selected under the Breaker menu for breaker closing are excluded from the list of outputs for selection under the menus of all elements providing such output relay selection.*

> *Note:*
> *For If Aux Relay 2 is selected for Breaker Close or Contactor Close, the relay name from the Output Relays menu changes to* ***Close*** *If Aux Relay 2 is not selected, the name reverts to* ***Aux Relay 2****.*

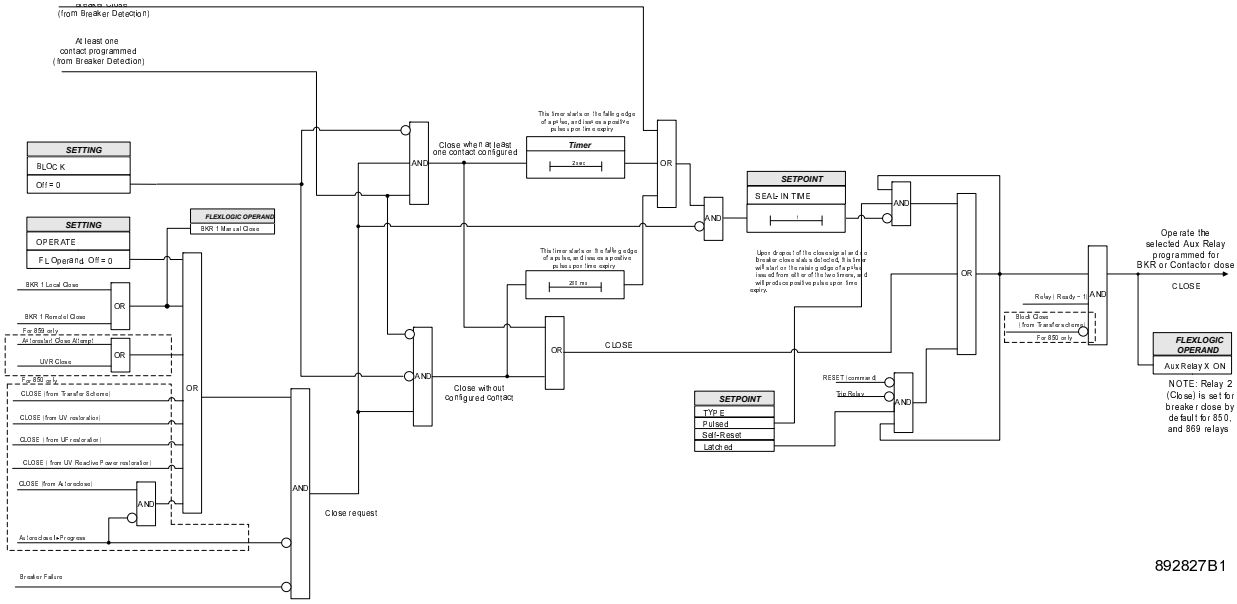

Figure 96: Relay Selected for Breaker close

7.3.1.3 AUXILIARY OUTPUT RELAYS

The relay is equipped with Auxiliary Output relays. The I/O cards, and the number of auxiliary output relays are defined at the time of relay ordering. Auxiliary Relays can be energized directly from the menu of the protection or control feature or from their respective menus by assigning a FlexLogic operand (trigger) under the setpoint ***AUX RLY # OPERATE***. Changing the state of any of the Auxiliary Relays will be inhibited if the relay is in `Not Ready` mode.

NAME

Range: Up to 13 alphanumeric characters

Default: Aux Rly #

The setpoint is used to name the auxiliary output relay by selecting up to 13 alphanumeric characters.

SEAL-IN TIME (displayed only if Type=Pulsed)

Range: 0.00 to 9.99 s in steps of 0.01 s

Default: 0.10 s

When Type = Pulsed is selected, the setpoint ***AUX RLY # SEAL-IN TIME*** is displayed in the menu for selection of the time interval for which the output relay will remain Energized. The actual time, for which the output relay stays energized, starts from the time of output first trigger, and ends when Output Seal-In Time expires. The Seal-In time applies at the dropdown edge of the output relay. If during timing out of the Seal-In Time, another pulse/pulses occur, the Seal-In Time will be reapplied to the last pulse, resulting in prolonged time for which the output will stay energized before going to de-energized mode.

BLOCK

Range: Disabled, Any FlexLogic operand

Default: Disabled

This setting defines a block to the Auxiliary output relay. When the selected input is asserted, the Aux relay is blocked.

OPERATE

Range: Off, On, Any FlexLogic operand

Default: Off

This setpoint provides a selection of any operand from the list of FlexLogic or communications, which can be used to energize the auxiliary output relay.

When set to `On`, the output relay is constantly asserted (On=1).

When set to `Off` and no FlexLogic operand is selected, the output relay operates as set in individual protection elements.

> *Note:*
> *Setting **OPERATE** to On supersedes individual protection function settings.*

TYPE

Range: Self-Reset, Latched, Pulsed

Default: Pulsed

If `Self-Reset` is selected, the output relay is energized as long as the element is in operating mode, and resets when the element drops out. If `Latched` is selected, the output relay stays energized upon element dropout. The latched auxiliary outputs can be reset by issuing a reset command. For Pulse selection, see ***SEAL-IN TIME*** (displayed only if ***Type*** = `Pulsed`).

OPERATION

Range: Non-Failsafe, Failsafe

Default: Non-Failsafe

Failsafe operation causes the output relay to be energized when the operand assigned to the ***OPERATE AUX RLY #*** setting is low and de-energized when the same operand is high. A failsafe relay also changes state (if not already activated by an operand driving this output relay) when control power is removed. Conversely, a non-failsafe relay is de-energized in its normal non-activated state and will not change state when control power is removed from the(if not already activated by a protection element).

EVENTS

Range: Disabled, Enabled

Default: Enabled

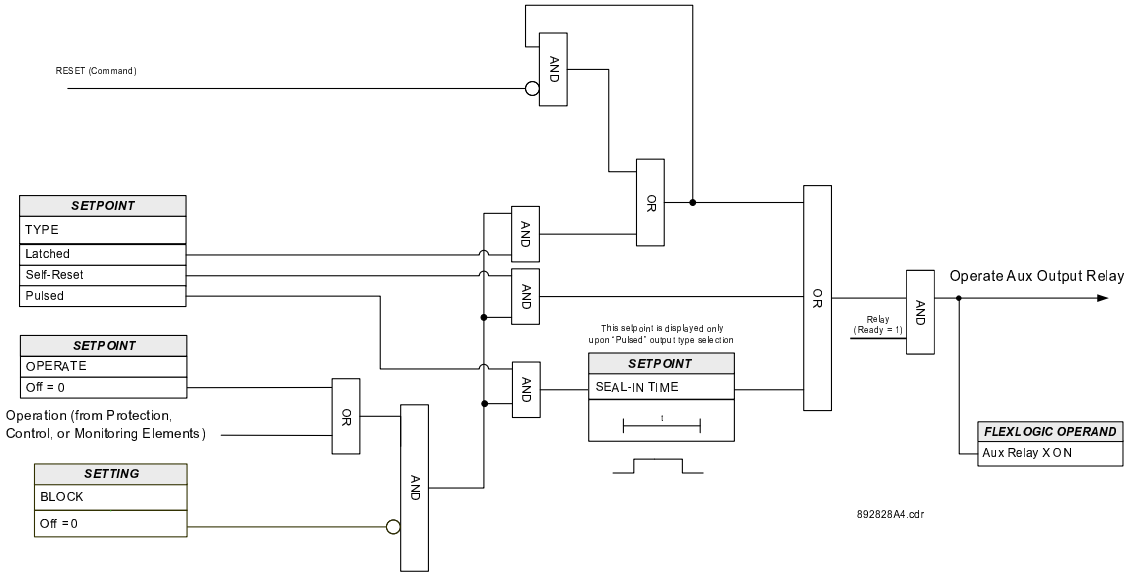

Figure 97: Auxiliary Relays generic logic

7.3.1.4 CRITICAL FAILURE RELAY

The 8 Series relay is equipped with one output relay (# 8 - Critical Failure Relay) for failsafe indication. The Critical Failure Relay is a Form-C contact with one normally open (NO) and one normally closed (NC) contact. There are no user-programmable setpoints associated with this output relay.

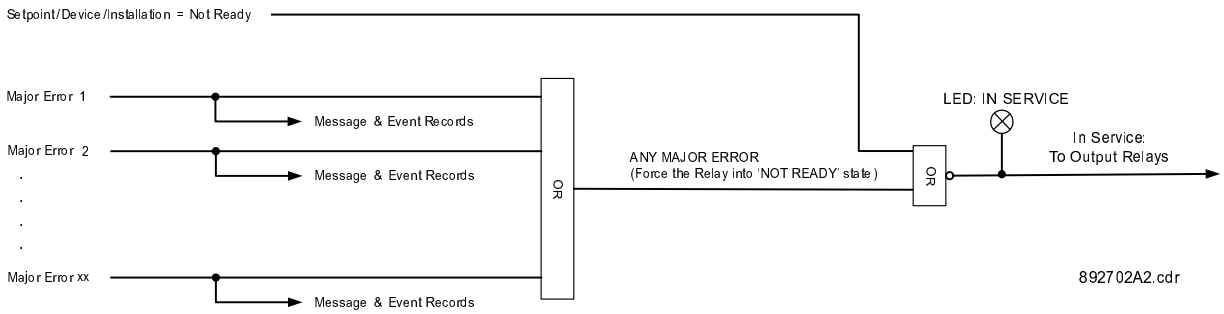

> *Note:*
> *Please refer to the Self-Test Errors"section from the manual for details on the status of the output relays during Relay Not Ready state, or detection of Major Self-Test error.*

7.3.2 VIRTUAL OUTPUTS

The relay is equipped with 96 virtual outputs that may be assigned for use via FlexLogic. Virtual outputs not assigned for use are set to `OFF` (Logic 0).

A name can be assigned to each virtual output. Any change of state to a virtual output can be logged as an event if programmed to do so. Virtual outputs are resolved in each protection pass via the evaluation of FlexLogic equations.

For example, if Virtual Output 1 is the trip signal from FlexLogic and the trip relay is used to signal events, the settings would be programmed as follows:

VIRTUAL OUTPUT 1 NAME: *Trip*

VIRTUAL OUTPUT 1 EVENTS: *Enabled*

Path: ***Setpoints*** > ***Outputs*** > ***Virtual Outputs*** > ***Virtual Outputs 1 (32)***

NAME

Range: up to 13 alphanumeric characters

Default: VO 1

An alphanumeric name may be assigned to a virtual output for diagnostic, setting, and event recording purposes.

EVENTS

Range: Disabled, Enabled

Default: Disabled

7.3.3 ANALOG OUTPUTS

Depending on the order code, the relay supports one optional DC analog card. The Analog card has 4 analog inputs and 7 analog outputs.There are three Analog Output channel scenarios for analog minimum and maximum output range shown in the figure below. Type A characteristics apply when the minimum range is 0 and the maximum range is a positive (+ve) value. Type B characteristics apply when the minimum and maximum ranges are definitely positive (+ve) values. Type C characteristics apply when the minimum range is a negative (-ve) and the maximum range is a positive (+ve) value. The following diagram illustrates these characteristics.

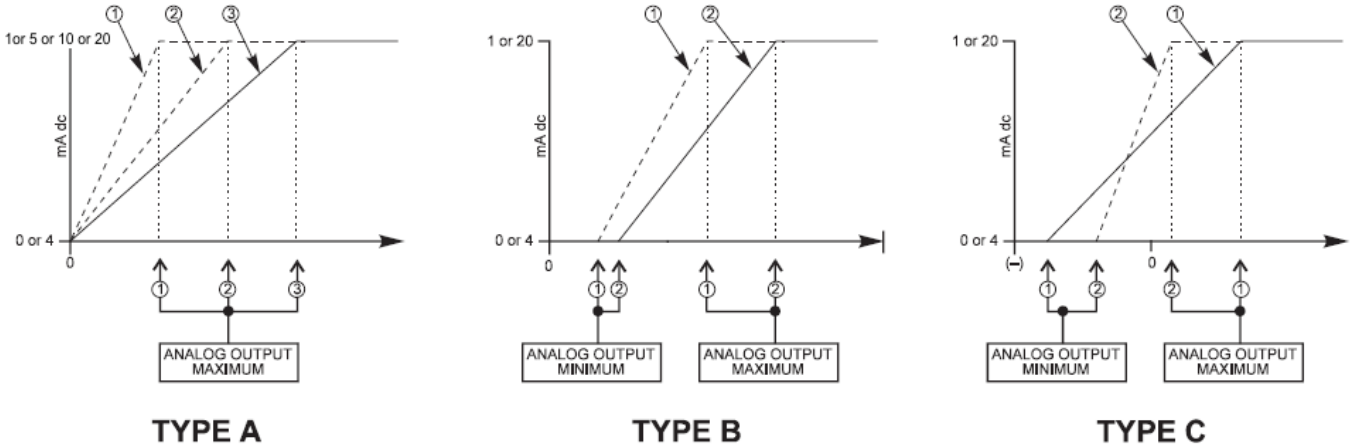

Figure 98: Analog Outputs Channel Characteristics

Path: ***Setpoints*** > ***Outputs*** > ***Analog Outputs*** > ***Analog Output 1(X)***

FUNCTION

Range: Disabled, Enabled

Default: Disabled

RANGE

Range: 0 to 1 mA, 0 to 5 mA, 0 to 10 mA, 0 to 20 mA, or 4 to 20 mA

Default: 0 to 1 mA

This setting provides the selection for the analog output range.

PARAMETER

Range: Off, any Flex Analog Parameter

Default: Off

This setting selects the measured parameter to control the Analog Output level.

MIN VALUE

Range: Populates per selection of the analog parameter

Default: 0

This setting defines the minimum value of the analog output quantity. It populates based on the selection of the analog parameter.

MAX VALUE

Range: Populates per selection of the analog parameter

Default: 0

This setting defines the maximum value of the analog output quantity. It populates based on the selection of the analog parameter.

Each channel can be programmed to represent a FlexAnalog parameter available in the respective relay. The range and steps is the same as the range of the FlexAnalog.

PF SCALING TYPE

Range: Flat, Step

Default: Flat

The measured Power Factor values can be transferred to any of the available analogue outputs. There are two options for scaling power factor: Flat and Step.

> *Note:*
> *This setting is only available when Analog Output is selected as Power Factor.*

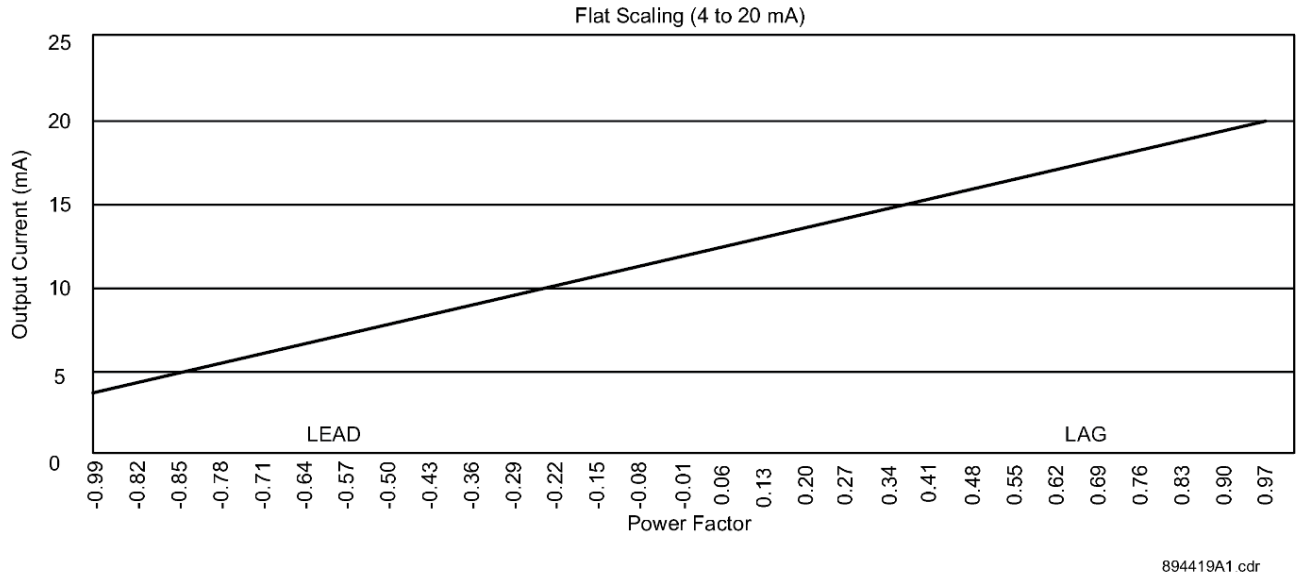

Figure 99: Flat Scaling

Flat scaling is a simple ascending linear function. It covers all selected ranges. The above figure shows the graph for the 4 to 20 mA output range in Flat Scaling. It covers the entire selected power factor range from the minimum (-0.99) to the maximum setting (+1.00).

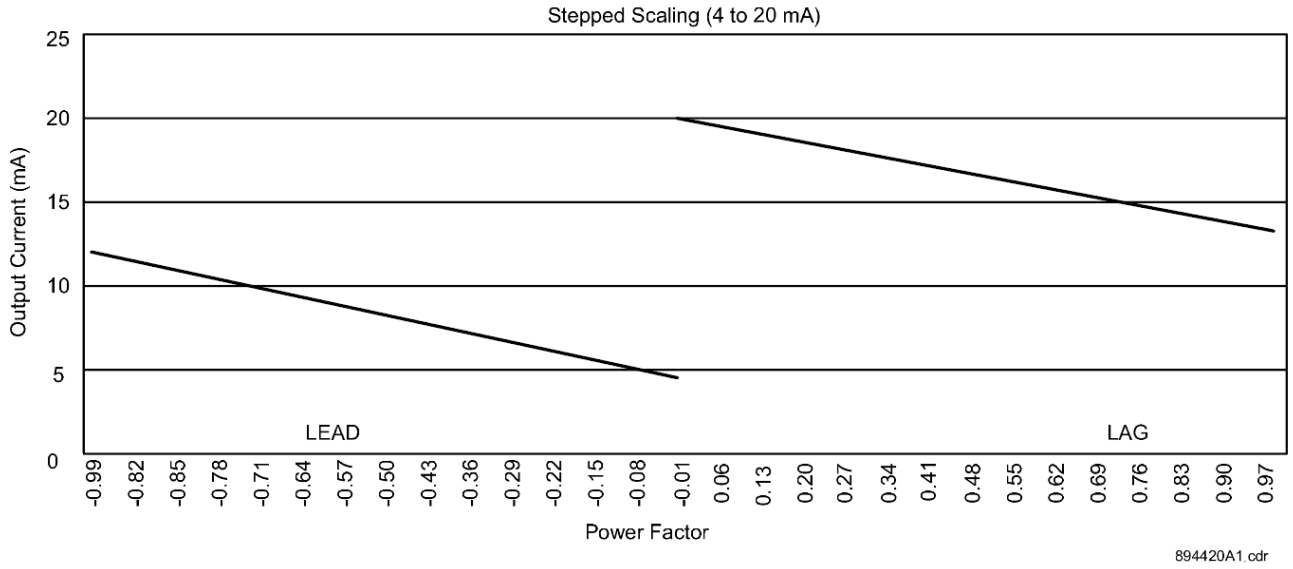

Figure 100: Step Scaling

Step scaling is a discontinuous descending linear function with one step-up point. The figure above shows the related graph for the 4 to 20 mA output range in Step Scaling. It covers all the entire selected power factor range from the minimum (-0.01) to the maximum setting (+0.00).

CHAPTER 8

PROTECTION

8.1 CHAPTER OVERVIEW

This chapter contains the following sections:

Chapter Overview	256
Protection	257
Generator Elements Overview	258
Current elements overview	298
Voltage elements overview	372
Impedance elements	398
Power elements	404
Frequency elements	412

8.2 PROTECTION

The protection elements are organized in six (6) identical setpoint groups: Setpoint Group 1 to Setpoint Group 6.

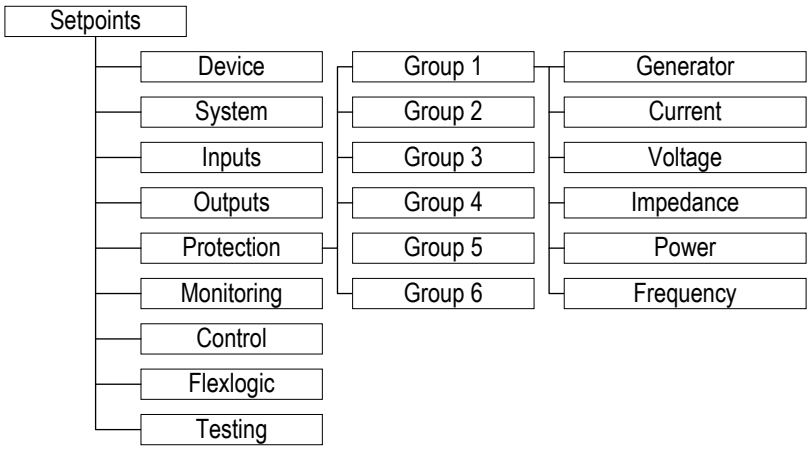

Figure 101: Protection Display Hierarchy

Each Setpoint Group has the same protection functions, depending on the relay order code.

8.3 GENERATOR ELEMENTS OVERVIEW

The relay provides the following protection elements:

- Percent Differential
- Overall Percent Differential
- Generator unbalance
- Inadvertent Energization
- Los of Excitation
- 3rd Harmonic Neutral Undervoltage
- 3rd Harmonic Voltage Difference
- Offline Overcurrent
- Overload Alarm

8.3.1 PERCENT DIFFERENTIAL

The relay provides one Percent Differential element per protection group using an internal summation method (described below). It is intended for use on the stator windings of the rotating machinery. This element is available only if the second AC analog input card with the K1-CT bank is properly installed in slot K.

For wiring options, please refer to Installation / Electrical installation / Differential CT inputs chapter of the manual.

For internal summation percent differential, we recommend that the terminal side CTs and neutral side CTs have the same ratios. The maximum allowable ratio mismatch is 10:1. In the case of a mismatch, the relay scales the currents to the primary of the CT with the higher primary value which is used as the CT reference for the percent differential element.

Internal summation operates on a per phase basis (phase-segregated). The key variables used in the element are the Restraining current (I_r) and the Differential current (I_d). The way they are calculated depends on the used differential method as follows:

Internal Summation Method

For internal summation method, differential current Id and restraint current I_r are defined below:

$$I_d = |I_{ts} - I_{ns}|$$

$$I_r = MAX\{|I_{ts}|, |I_{ns}|\}$$

Where: I_{ts} is the current phasor of the terminal side CTs (J1-CT bank), in per unit normalized to the reference CT nominal; I_{ns} is the current phasor of the neutral side CTs (K1-CT bank), in per unit normalized to the reference CT nominal; They are calculated based on the following equations:

$$I_{ts} = (I_{ts_sec_amp})(CT_{ts_pri_rating})/(C_{ts_sec_rating})(CT_{ref_pri\text{-}rating})$$

$$I_{ns} = (I_{ns_sec_amp})(CT_{ns_pri_rating})/(C_{ns_sec_rating})(CT_{ref_pri\text{-}rating})$$

Where:

- $I_{ts_sec_amp}$ = the terminal side CT current phasor in secondary amps
- $I_{ns_sec_amp}$ = the neutral side CT current phasor in secondary amps
- $CT_{ts_sec_rating}$ = the terminal side CT secondary current rating
- $CT_{ns_sec_rating}$ = the neutral side CT secondary current rating
- $CT_{ts_pri_rating}$ = the terminal side CT primary current rating

- $CT_{ns_pri_rating}$ = the neutral side CT primary current rating
- $CT_{ref_pri_rating}$ = the reference CT primary current rating
- The reference CT is the CT with the maximum primary current rating

The Percent Differential element with the internal summation method selected uses dual slope dual break point differential/restraint characteristic. The main purpose of the percent-slope characteristic is to prevent misoperation caused by unbalances between CTs during external faults. CT unbalances arise as a result of the following factors:

- CT accuracy errors
- CT saturation

The characteristic allows for very sensitive settings when fault current is low and less sensitive settings when fault current is high and CT performance may produce incorrect operate signals. The dual slope characteristic is shown in the following figure.

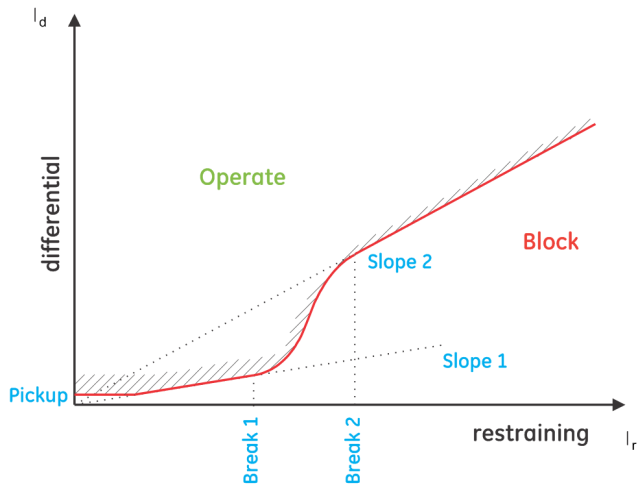

Figure 102: Percent Differential Characteristic

The horizontal axes value of the percent differential characteristic is the Restraining current (I_r) and the vertical axes value is the Differential current (I_d).

Each pair of measured restraining and differential currents represents a point on the previous figure: Percent Differential Characteristic. If this point is located above the limit line (area labeled “Operate”), then the differential flag is set (DIF=1). If the point is located below or on the limit line (area labeled “Block”), then the differential flag is reset (DIF=0).

Setpoints

Path: *Setpoints* > *Protection* > *Group 1 > Generator> Percent Differential*

FUNCTION

Range: Disabled, Trip, Configurable

Note: Relays with firmware version 4 and later have a `Latched Trip` *option*

Default: Disabled

PICKUP

Range: 0.05 to 1.00 x CT in steps of 0.01

Default: 0.20

This setting defines the minimum differential current required for operation. The setting is based on the amount of differential current that can be seen under normal operating conditions. A setting of 0.1 to 0.3 pu is generally recommended. The CT base of the setting is the reference CT nominal (the CT with the maximum primary current rating).

SLOPE 1

Range: 1 to 100% in steps of 1

Default: 25%

The setting is applicable for restraint currents from zero to BREAK 1, and defines the ratio of differential to restraint current above which the element operates. The slope is set to ensure sensitivity to internal faults at normal operating current levels. The criterion for setting this slope is to allow for maximum expected CT mismatch error when operating at the maximum permitted current. This maximum error is generally in the range of 5 to 10% of CT rating.

BREAK 1

Range: 0.50 to 2.00 x CT in steps of 0.01

Default: 1.50

The setting defines the end of the Slope 1 region and the start of the transition region. It should be set just above the maximum normal operating current level of the machine.

BREAK 2

Range: 2.00 to 30.00 x CT in steps of 0.01

Default: 4.00

The setting defines the end of the transition region and the start of the SLOPE 2 region. It must be set to the level at which any of the protection CTs are expected to begin to saturate. To avoid discontinuity in the cubic spline calculation, the relay applies a minimum margin of 0.3 CT between BREAK 1 and BREAK 2.

SLOPE 2

Range: 1 to 100% in steps of 1

Default: 95%

The setting is applicable for restraint currents above the BREAK 2 setting. The slope is set to ensure stability under heavy external fault conditions that could lead to high differential currents as a result of CT saturation. A setting of 80 to 100% is recommended. The transition region (as shown on the percent differential characteristic) is a cubic spline, automatically calculated by the relay to result in a smooth transition between SLOPE 1 and SLOPE 2 with no discontinuities.

PICKUP DELAY

Range: 0.000 to 10.000 in steps of 0.001

Default: 0.000

This setting defines the pickup time delay of the percent differential element.

BLOCK

Range: Off, Any FlexLogic operand

Default: Off

OUTPUT RELAY X

Range: Operate, Do Not Operate

Default: Do Not Operate

EVENTS

Range: Disabled, Enabled

Default: Enabled

TARGETS

Range: Disabled, Self-reset, Latched

Default: Latched

Note:
The values of the setpoints for minimum pickup, Break 1 and Break 2 are expressed in terms of CT reference.

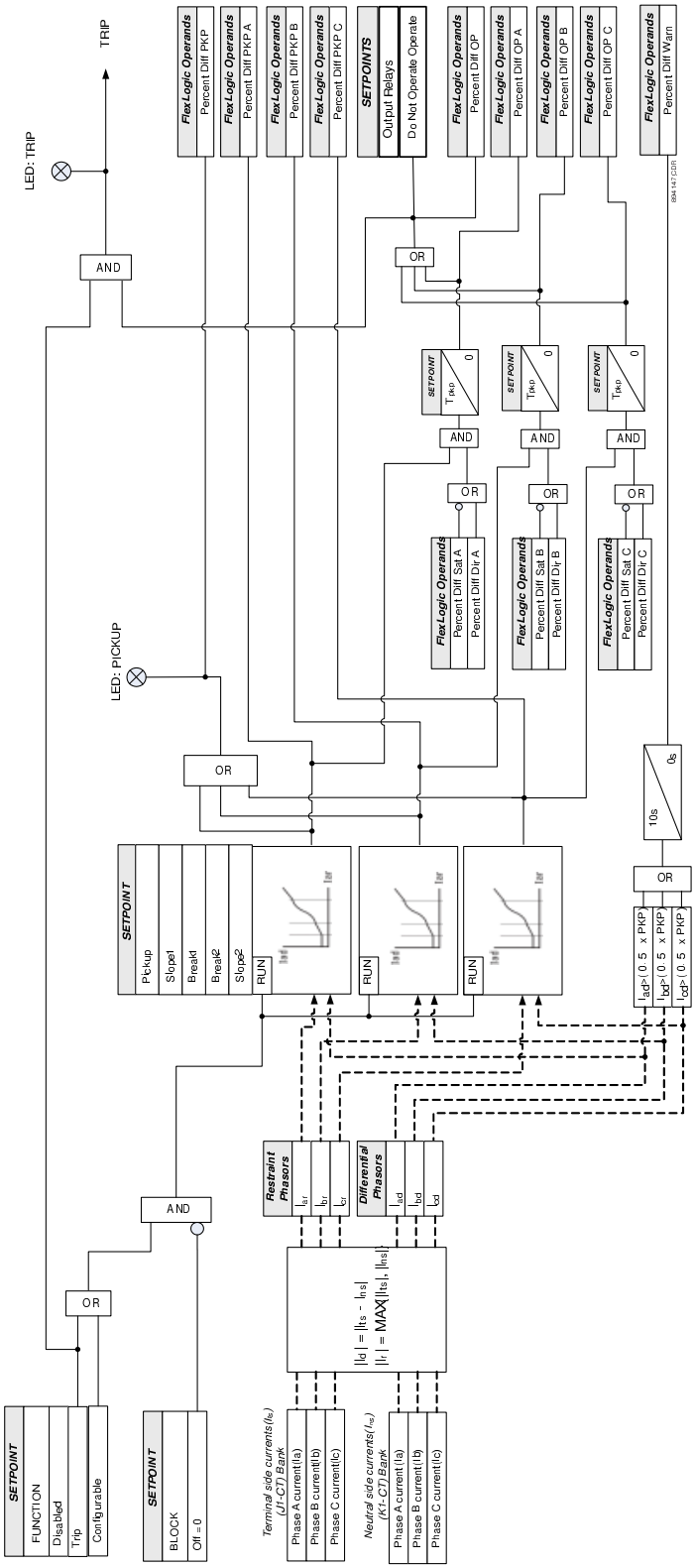

Figure 103: Percent Differential logic diagram

8.3.1.1 SATURATION DETECTOR

The relay incorporates a saturation detection feature to enhance security during external faults. This detector takes advantage of the fact that any CT operates correctly for a short period of time, even under very large primary

currents that would subsequently cause a very deep saturation. As a result, in the case of an external fault, the differential current stays very low during the initial period of linear operation of the CTs while the restraining signal develops rapidly.

Once one or more CTs saturate, the differential current increases. The restraining signal, however, yields by at least a few milliseconds. During internal faults, both the differential and restraining currents develop simultaneously. This creates two distinct characteristic patterns for the differential restraining trajectory during external and internal fault.

The CT saturation condition is declared when the restraining signal magnitude surpasses the lower breakpoint (BREAK 1) while the differential current remains below the first slope (SLOPE 1) and its extension. This condition is transient and necessitates a seal-in mechanism, implemented through State Machine logic.

To address rapidly occurring CT saturation, the detector checks for signal relationships at the waveform level. The sample-based stage of the saturation detector uses the time derivative of the restraining signal (di/dt) to trace the saturation pattern more accurately.The saturation detector is capable of detecting saturation approximately 3 milliseconds after a fault initiates. It operates based on the main differential characteristic, and users should consider this when configuring the characteristic as the parameters should retain their original meaning.

The saturation detector is implemented as a state machine, with NORMAL as the initial state. In this state, the saturation flag (SAT) is unset. The algorithm calculates the saturation condition (SC). If SC equals 1 while in the NORMAL state, the saturation detector transitions to the EXTERNAL FAULT state and sets the saturation flag (SAT = 1). The algorithm reverts to the NORMAL state if the differential current falls below the first slope (SL) for over 200 milliseconds.

When in the EXTERNAL FAULT state, the algorithm enters the EXTERNAL FAULT & CT SATURATION state if the differential flag (DIF) is set (DIF = 1). In the EXTERNAL FAULT & CT SATURATION state, the saturation flag remains set (SAT = 1). The state machine returns to the EXTERNAL FAULT state if the differential flag is reset (DIF = 0) for 100 milliseconds. This logic is illustrated in the following figure:

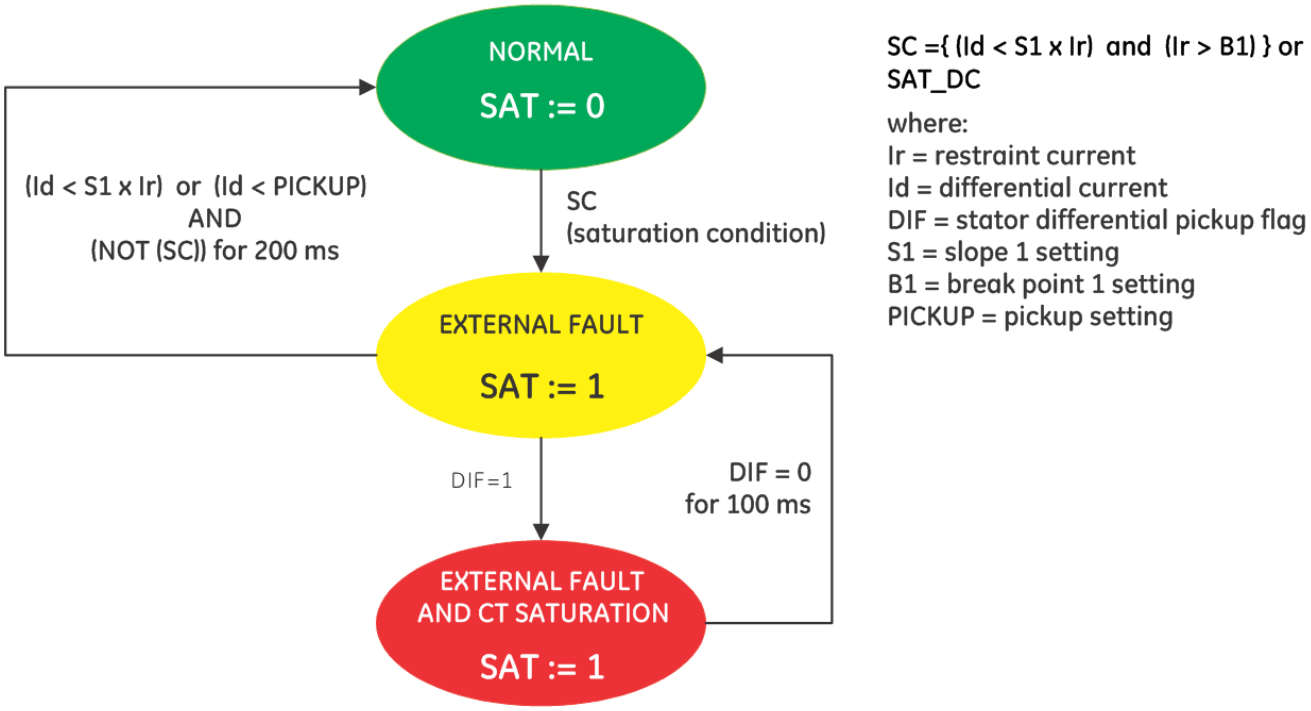

Figure 104: Saturation detection state machine

A distinct approach for detecting saturation attributed to the DC component has been integrated into the saturation detectionlogic, detailed as follows.

1. Calculate the DC component of both phase and neutral currents. This calculation is based on the absolute value of the average of current samples collected over the most recent cycle of data.
2. Examine the calculated DC component according to the following criteria:

$$DC_Ph > D1 \times |IPh| \text{ AND } |IPh| > PKP \rightarrow DC_Ph_SAT = 1$$

$$DC_N > D1 \times |IN| \text{ AND } |IN| > PKP \rightarrow DC_N_SAT = 1$$

where D1 = 0.5, a factory constant.

The outcomes of these comparisons should then be passed on to the following logic for the declaration of saturation stemming from the DC component.

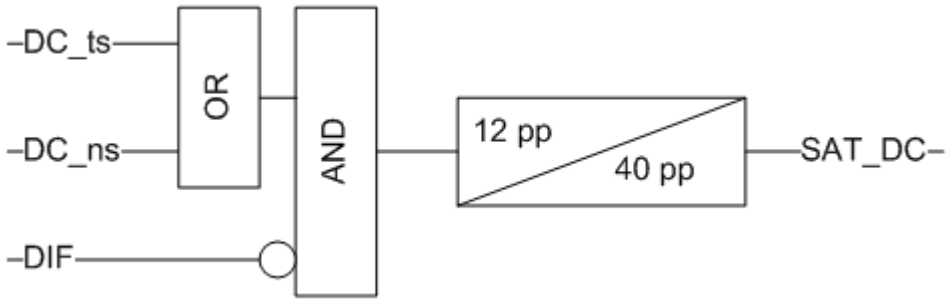

Figure 105: Saturation detection logic

The operation of the saturation detector is available through the FlexLogic operand STATOR DIFF SAT A/B/C.

8.3.2 OVERALL PERCENT DIFFERENTIAL

The relay provides one Overall Percent Differential element per setpoint group. The setpoints from the protection menu define a dual slope, dual breakpoint differential/restraint characteristic. The filtering and calculation of transformer differential and restraint currents, and differential current 2nd and 5th harmonics are as shown in the following figure.

Note:
An 889 with the specific order code option, K-R1/R5 is required for the Overall Percentage Differential. An 889 with the K-R1/R5 option supports 3-CT banks, 1 VT bank and an additional second breaker control.

Note:
The K2 CT bank is connected to Winding 1, which is the High-Voltage winding of the GSU connected to the system. In contrast, the K1 CT bank is connected at the neutral side of the generator, and must be configured as Winding 2 (K1).

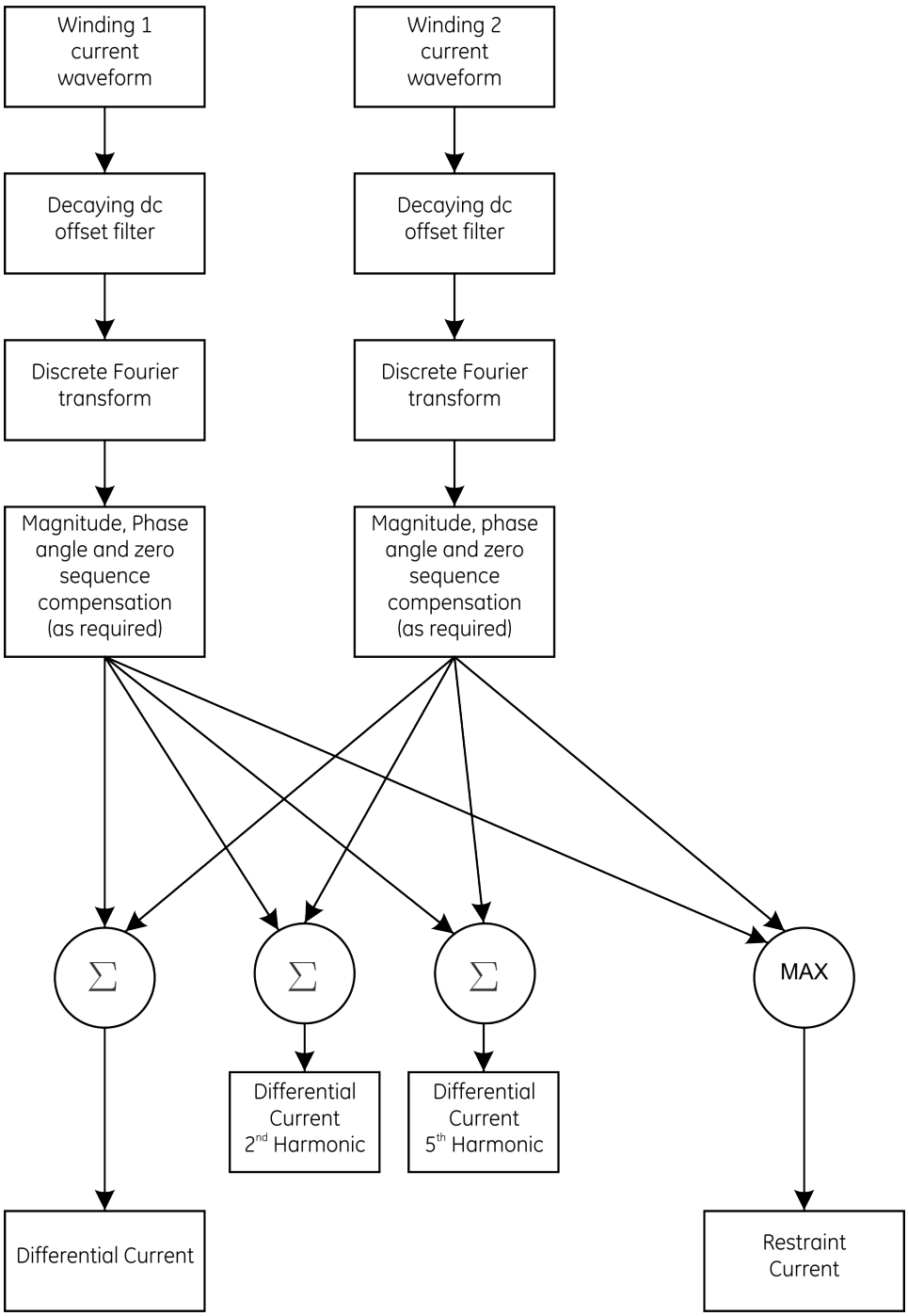

Figure 106: Filtering and Calculation of differential and restraint currents

The relay continuously calculates per-phase differential and restraint currents, and compares the ratio between the two values with a user pre-defined differential/restraint characteristic. The purpose of the characteristic is to define the zone of differential protection operation and the zone of no operation. The differential characteristic provides setpoints for sensitivity, dependability, and security for all types of faults, and is programmed by the user to reflect a variety of transformer differential protection applications.

The differential current is calculated per-phase as a vector sum of the currents from all windings after magnitude and angle compensation.

$$Id = \bar{I}_{1_{comp}} + \bar{I}_{2_{comp}}$$

The restraint current is calculated as a maximum of the same internally compensated currents:

$$Ir = \max(\left|\vec{I}_{1_{comp}}\right|, \left|\vec{I}_{2_{comp}}\right|)$$

> *Note:*
> *Refer to the Transformer Setup chapter for the winding currents magnitude and phase shift compensations performed by the relay.*

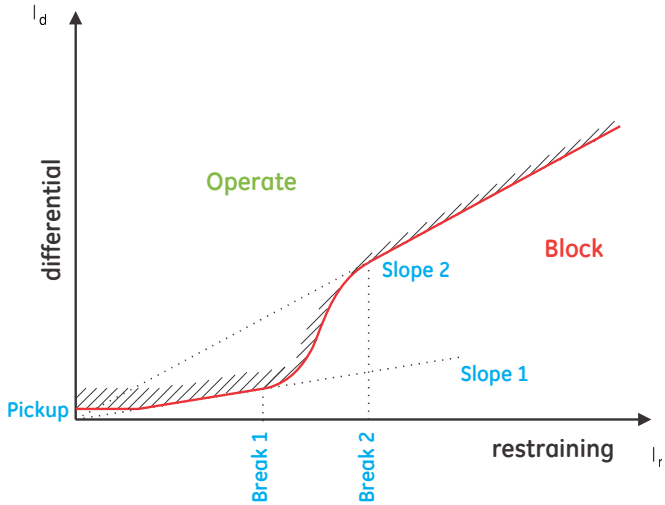

Figure 107: Differential/Restraint Characteristic for main transformer

The above figure shows the differential/restraint characteristic of the main transformer percent differential protection.

The decision for operation or no operation is complemented by detection of CT saturation, followed by currents directional check. The saturation flag (SAT) can only be initiated during an external fault, providing the magnitude of any of the restraints is bigger than a threshold average using the Break1 and Break 2 setting programmed in the menu. While at the same time, the differential/restraint ratio is below a slope average calculated based on Slope 1 and Slope 2 settings. The directional flag is not checked unless the SAT flag is initiated. Normally during internal faults, the trajectory of the differential/restraint ratio does not cross the average calculated breakpoint threshold, in which case the directional flag is not checked. The directional flag is checked during external faults (SAT flag triggered), where due to saturation, the differential/restraint trajectory is able to enter the operating region. Usually the angle between the currents during external fault and CT saturation remains bigger than 90 degrees, in which case the percent differential protection does not operate. However, while in the operating region, the protection would operate, on evolving faults (external to internal fault), as the directional flag would be high (angle less than 90 degrees).

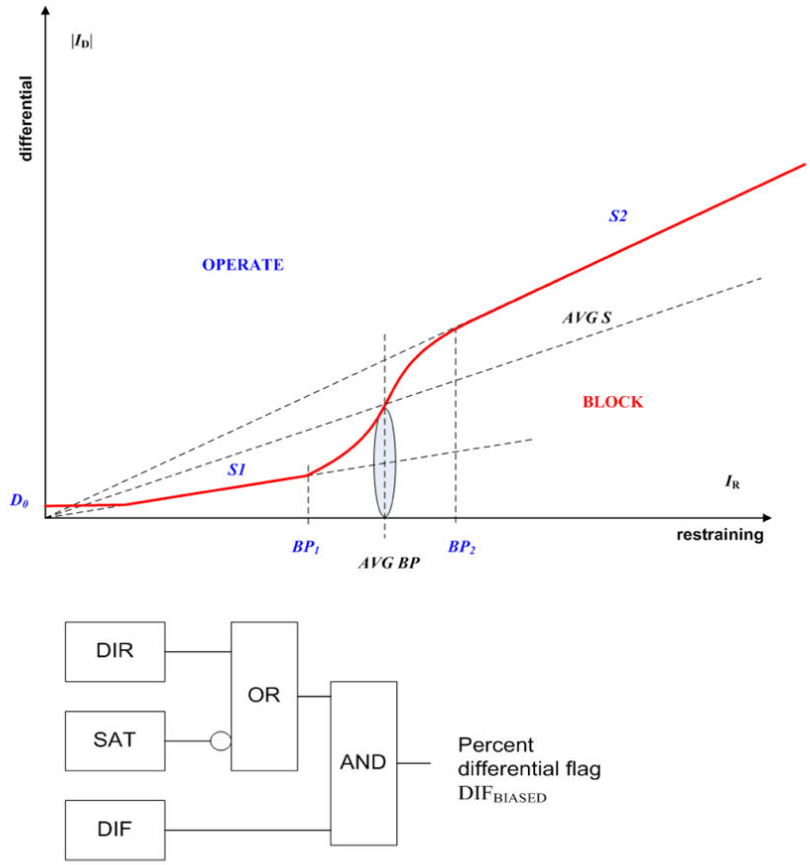

Recommendations for configuring the Differential/Restraint characteristic

The following setpoints define the differential/restraint characteristic:

Minimum Pickup

This setpoint is expressed in x CT of Winding 1. The minimum pickup defines the minimum differential current required for operation. The pickup setting must be higher than the amount of differential current that is seen under normal transformer loading conditions, and must be higher than the maximum differential current that is seen during transformer tap changer operation.

For example, for a 20MVA, 25MVA, or 28MVA power transformer with a 138kV/4.16kV ratio, and class C current transformers CT(w1) 200:5, and CT(w2) 3000:5, the CT errors and the minimum pickup setting is calculated as follows:

Winding 1 (138kV) CT – reference. Magnitude factor: M(w1) = 1

Winding 2(4.16kV) CT – non reference. Magnitude factor: M(w2) = 4.16 *3000/138*200 = 0.4521

Based on emergency MVA rating:

Winding 1 rated current = 28MVA/(138kV*sqrt(3)) = 117 Amps

Winding 2 rated current =28MVA/(4.16*sqrt(3)) = 3890 Amps

The accuracy of the Class C current transformer is defined in the IEEE standard C37.110 as not exceeding 10% for symmetrical current magnitudes of up to 20 times the rating for a standard burden resistance:

117Amps *10% = 11.7 Amps = > 11.7/200 = 0.0585 xCT(w1)

3890 Amps *10% = 389 Amps = > 389/3000*M(w2) = 389/3000*0.4521 =0.0585 xCT (w1)

In the worst case, the errors from the two CTs as expressed in xCT(w1) as a reference can be summed:

Minimum Pickup = 0.0585 + 0.0585 = 0.117 (0.2xCT setting for Pickup is sufficient)

Slope 1

This setting defines the desired differential/restraint ratio for detecting internal faults. The percent Slope 1 setting must be above the differential/restraint ratio duringexternal faults with non-significant fault current magnitude, but with long lasting DC component, which is able to cause CT saturation.

The Slope 1 setting can be calculated based on the restraint current during emergency loading of the transformer:

Restraint current Winding 1 = 117 Amps/200 = 0.585 xCT

Restraint current Winding 2 (scaled) = 3890/3000*0.4521 = 0.585 xCT

Differential current = CT error = 0.117 xCT

Slope 1 = (0.117/0.585)*100 = 20%

Adding 5% margin, produces a Slope 1 setting of 25%

Slope 2

The Slope 2 setting ensures stability during heavy through fault conditions, where CT saturation results in high differential current. Slope 2 must be set high enough to cope with the worst case when the CTs from one winding saturate but the CTs from the other winding do not saturate during external fault. In such case the ratio of the differential to restraint current can be as high as 95 to 98%.

Break 1

Break 1 must be set to reflect the through current (restraint current) expressed in times winding 1 CT (w1) below which CT saturation due to DC components and/or residual magnetism is not expected. The latter may be as high as 80% of the nominal flux, effectively reducing the CT capabilities by factor of 5.

Therefore, this setting must correspond to the end of the linear operation of the CT with the worst characteristic, counting up to 80% remnant flux in the CT core. To calculate this setting, CTs knee-point voltage and CT secondary burden are needed.

$$B_1 = \left[\frac{V_{sat} \bullet M^{c}_{(w)}}{R_b \bullet I^{CT}_{\sec}} \right] \bullet 0.2 \text{ (xCT)}$$

where:

- The CT burden resistance $R_b = 2(R_{lead} + R_{CTsec} + R_{relay})$
- CT secondary resistance = R_{CTsec},
- Conductor resistance = R_{lead} and the
- Relay input resistance = R_{relay}.
- I^{CT}_{sec} is the CT secondary nominal current.
- V_{sat} is the CT knee-point voltage.

The Break 1 is calculated per the formula above for each winding CT, and then the smallest per value is entered as a setting.

Break 2

The Break 2 setting defines the beginning of Slope 2 used to provide stability during heavy through fault conditions, where CT saturation results in high differential current. Break 2 must be set to the through-fault current which causes the worst CT to saturate, with saturation free time of at least half power cycle.

To define the degree of CT saturation, the IEEE CT saturation tool can be used:

For example, let

- the CT 3000:5 on winding 2 be the worst one which would saturate first during external faults
- the maximum external fault current be 25kA, with an X/R ratio of 15

The CT voltage kneepoint from the saturation characteristic is 300 V, with winding resistance of 0.5 Ohms, Burden resistance of 2.19 Ohms, and Burden reactance of 0.01 Ohms.

INPUT PARAMETERS:		ENTER:	
Inverse of sat. curve slope =	S =	15	---
RMS voltage at 10A exc. current =	Vs =	300	volts rms
Turns ratio = n2/1=	N =	600	---
Winding resistance =	Rw =	0.500	ohms
Burden resistance =	Rb =	2.190	ohms
Burden reactance =	Xb =	0.010	ohms
System X/R ratio =	XoverR =	15.0	---
Per unit offset in primary current =	Off =	1.00	-1<Off<1
Per unit remanence (based on Vs) =	λrem	0.00	---
Symmetrical primary fault current =	Ip =	25,000	amps rms

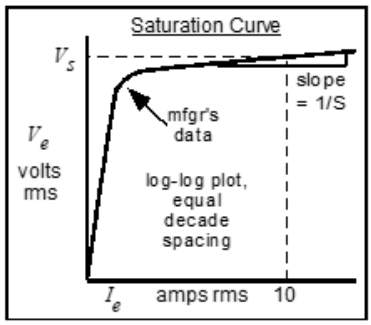

Thick lines: **Ideal (blue)** and **actual (black)** secondary current in amps vs time in se
Thin lines: **Ideal (blue)** and **actual (black)** secondary current extracted fundamenta

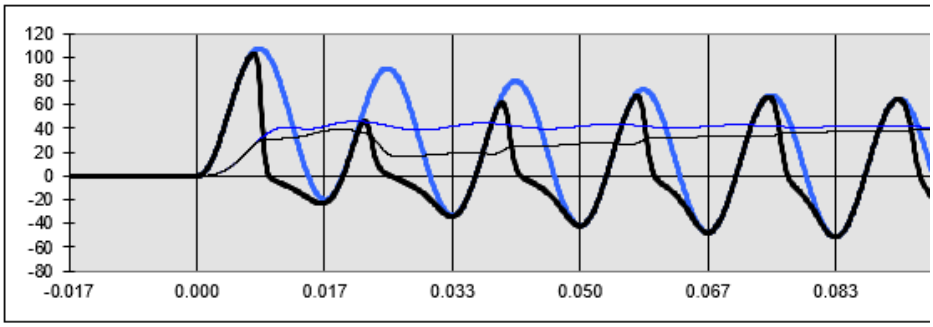

The waveform shows that during this external bolted fault with maximum fault current of 25 kA, the CT (3000:5) will saturate severely, and produce only a ¼ of a cycle saturation free time. Break 2 must be set to a through fault current so that the CT (3000:5) produces at least ½ cycle saturation free time. The solution isto change the fault current to 15000 kA. The waveform now shows a bigger part of the first cycle before saturation.

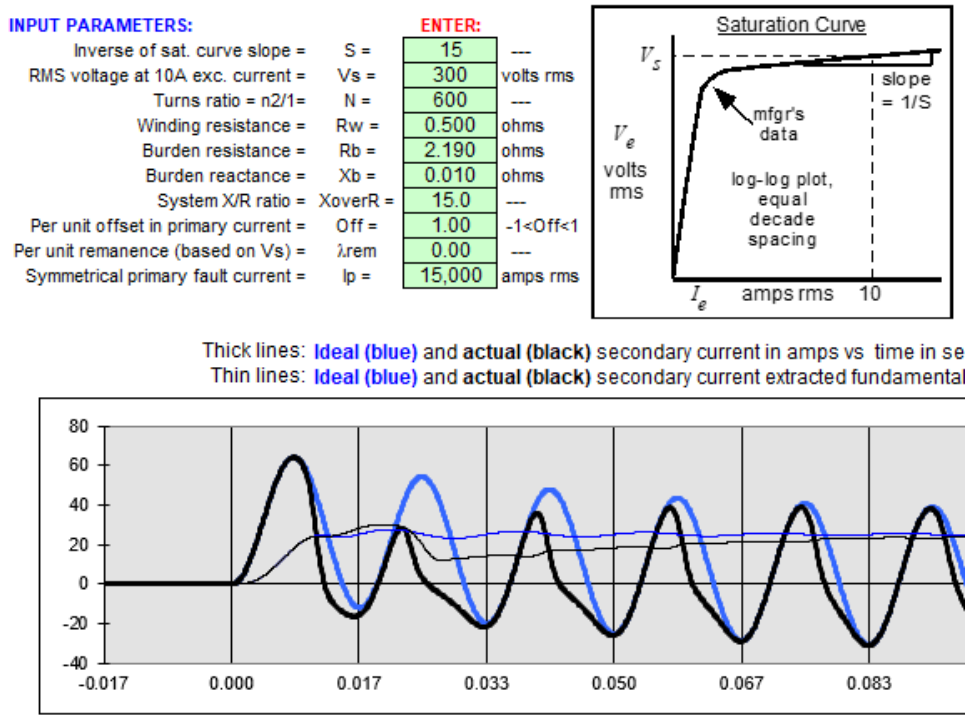

The fault current of 15000 Amps would then be translated as 15000/3000 = 5 times winding 2 CT. Bringing this to the same scale with respect to winding 1 CT reference , i.e. multiplying by a magnitude of 0.4521, the Break 2 setting would be:

Break 2 = 5 *0.4521 = 2.21 xCT (w1)

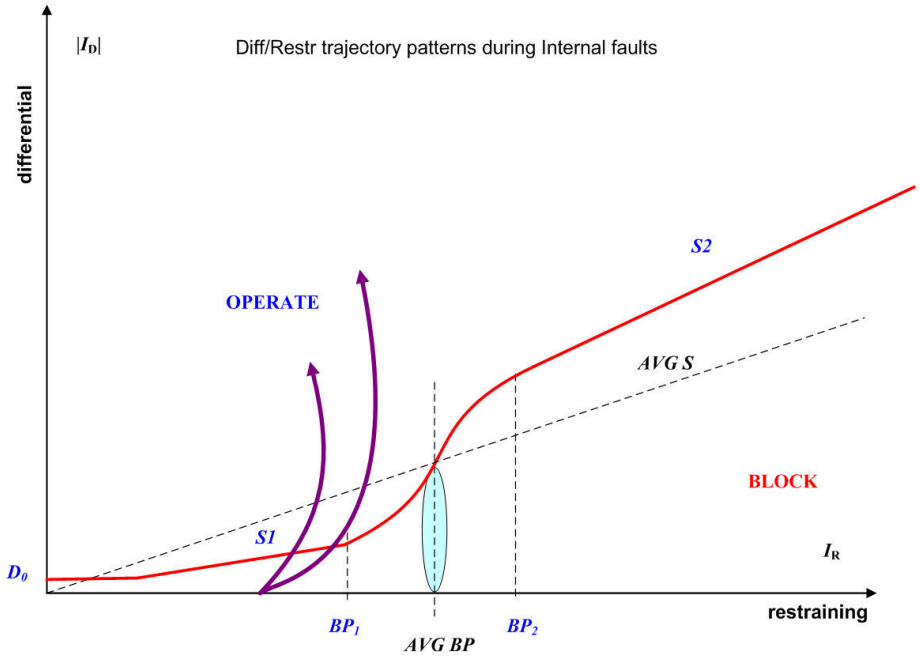

Figure 108: Examples of differential/restraint trajectory during internal fault

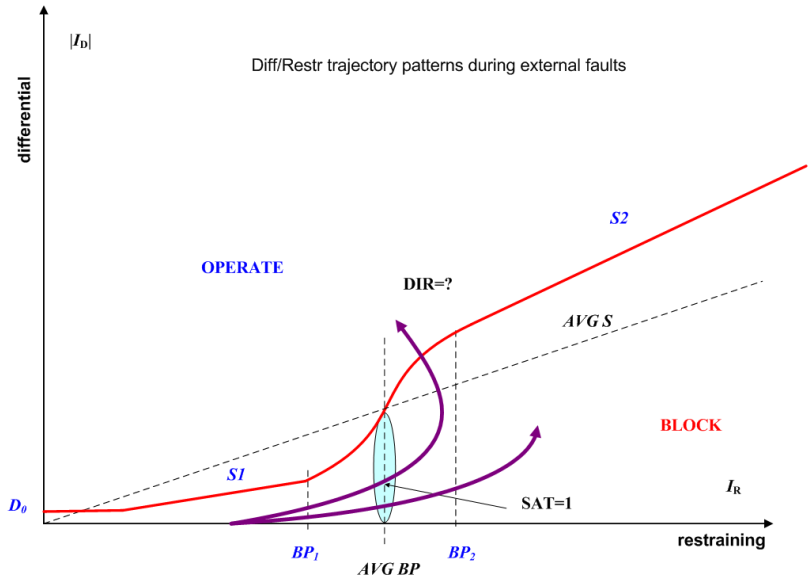

Figure 109: Examples of differential/restraint trajectory during external fault

Path: ***Setpoints*** > ***Protection*** > ***Group 1 (6)*** > ***Generator*** > ***Overall Differential***

FUNCTION

Range: Disabled, Trip, Configurable

Note: Relays with firmware version 4 and later have a `Latched Trip` *option*

Default: Disabled

The selection of Trip or Configurable enables the Percent Phase Differential function. The trip output relays selected to trip each breaker will operate, if the Percent Differential protection operates and these trip outputs are selected in the Percent Differential menu as `Operate`.

PICKUP

Range: 0.05 to 1.00 x CT in steps of 0.01

Default: 0.20 x CT

This setting defines the minimum differential current required for operation. The setting is selected based on the amount of differential current that might be seen under normal conditions. This differential current is a result of the transformer magnetizing current, CT inaccuracies, and transformer ratio that would change by the transformer on-load tap changer. When the tap changer feature is set properly, the relay compensates the transformation ratio which impacts the differential protection automatically.

SLOPE 1

Range: 1 to 100% in steps of 1

Default: 25%

This setting is applicable for restraint currents (through currents) of zero to kneepoint 1, and defines the ratio of differential/restraint currents, above which the element will operate. This slope is set to ensure sensitivity on internal faults at normal transformer loading. The value of slope 1 must be above the maximum differential currents which may be seen for through currents with magnitudes less than break 1 setting. The differential currents can be caused by winding CT inaccuracies, the constant transformer magnetizing current, and the leakage current from in-zone grounding transformers. Usually a margin of 2% to 5% is added to this setting.

BREAK 1

Range: 0.50 to 2.00 x CT in steps of 0.01 x CT

Default: 1.50 x CT

The setting defines the limit of linear operation of the magnitude reference CT, accounting for up to 80% residual flux, that effectively reduces the capability of the CT by a factor of 5. ***BREAK 1*** must be set below the current that can cause CT saturation due to DC components and/or residual magnetism. Very often the ***BREAK 1*** setting is based on the transformer winding 1 nominal current (100% transformer loading). In such cases, one must check whether or not this setting complies with the above recommendation regarding the CT linear performance. This breakpoint marks the end of slope 1, where no CT saturation is expected for restraining (through) currents smaller than that breakpoint.

BREAK 2

Range: 2.00 to 30.00 x CT in steps of 0.01 x CT

Default: 4.00 x CT

Break 2 must be set below the fault current that is most likely to saturate any of the transformer CTs due to an AC component alone. The setting is expressed in times CT, where the CT rating is the magnitude reference CT either user selected, or selected automatically.

SLOPE 2

Range: 1% to 100% in steps of 1%

Default: 95%

This setting ensures stability during through fault conditions, resulting in CT saturation and spurious high differential current. ***SLOPE 2*** must be set high to cater for the worst case scenario, where only CTs from one winding saturate, but the CTs from the other winding(s) do not saturate. In such cases the differential/restraint ratio can go as high as 95% to 98%.

Note:
*Setting **SLOPE 1** higher than **SLOPE 2** must be avoided, as it is not practical, even though the ranges for both slopes can allow for one to do so. Correct programming of the differential-restraint characteristic is achieved when **SLOPE 1** is used for sensitivity of operation during internal fault in the range of 15% to 35%, and **SLOPE 2** set usually from 80% to 98%, is used to provide secure area for the diff./restr. trajectory during external faults and CT saturation.*

PICKUP DELAY

Range: 0.000 to 10.000 in steps of 0.001 s

Default: 0.000 s

This setting defines the pickup time delay of the percent differential element.

INRUSH INHIBIT

Range: Disabled, 2nd Harm Block

Default: 2nd Harm Block

This setting enables or disables the inrush inhibit function. None of the settings for inrush inhibit are active, when the function is set to “Disabled”.

INRUSH INHIBIT LEVEL

Range: 1.0% to 40.0% in steps of 0.1%

Default: 20.0%

This setting specifies the ratio of the 2nd harmonic differential current to the fundamental frequency differential current for the selected mode of the 2nd harmonic inhibit. The percent differential protection will be blocked from operation if the actual ratio of the differential 2nd harmonic current to the fundamental frequency differential current is above this threshold.

INRUSH INHIBIT MODE

Range: Per Phase, Average, 2-out-of-3, 1-out-of-3

Default: Per Phase

This setting specifies the mode of blocking during transformer magnetizing (inrush) conditions.

If set to `Per phase`, the function performs inrush inhibit per each phase individually.

If set to “Average”, the relay calculates the average 2nd harmonic level and compares this level against the setting for inrush inhibit level. Averaging of the 2nd harmonics follows an adaptive algorithm depending on per-phase magnitude of the fundamental frequency differential current. If the differential current on any of the three phases goes below the differential current cut-off level of 0.04 x CT, the 2nd harmonic current from that phase is dropped (zeroed) from the equation for averaging, and the divider is decreased from 3 to 2. The same happens if the magnitude of the differential current on one of two remaining phases during this same energization drops below the cut-off level. In this case the 2nd harmonic on this phase will be dropped from summation, and the divider will be decreased to 1.

If set to `2-out-of-3`, the relay estimates the 2nd harmonic differential current per-phase, and blocks the differential protection for all three phases, if the 2nd harmonic content from **any two phases** is higher than the 2nd harmonic value entered in the setpoint `inrush inhibit level`.

If set to `1-out-of-3`, the relay estimates the 2nd harmonic differential current per-phase, and blocks the differential protection for all three phases, if the 2nd harmonic content from **any phase** is higher than the 2nd harmonic value entered in the setpoint “inrush inhibit level”. This method is also known as the *cross-blocking* method.

OVEREXCITATION INHIBIT

Range: Disabled, 5th Harmonic

Default: 5th Harmonic

This setting provides 5th harmonic differential protection blocking during an over excitation condition resulting from an increased V/Hz ratio.

An overexcitation condition resulting from an increased V/Hz ratio poses a danger to the protected transformer. A given transformer can tolerate an overfluxing condition for a limited time, as the danger is associated with thermal processes in the core. Instantaneous tripping of the transformer from the differential protection is not desirable.

The relay uses a traditional 5th harmonic ratio for inhibiting the differential function during overexcitation conditions.

OVEREXCITATION LEVEL

Range: 1.0% to 40.0% in steps of 0.1%

Default: 10.0%

This setting specifies the level of 5th harmonic during overexcitation (overfluxing) transformer conditions. When the 5th harmonic level exceeds the specified ***OVEREXCITATION LEVEL*** setting (5th harmonic ratio) the differential element is blocked. The overexcitation inhibit works on a per-phase basis.

BLOCK

Range: Any FlexLogic operand

Default: Off

RELAYS

Range: Do Not Operate, Operate

Default: Do Not Operate

Any, or all of the output relays can be selected to operate, upon percent differential operation.

The relay provides one instantaneous differential element per setpoint group.

The Instantaneous differential protection is not biased protection and operates similar to the instantaneous overcurrent protection. Inputs to this protection are computed by the relay per-phase differential currents. Operation occurs if any of the computed phase differential current is above the instantaneous differential pickup setting. The instantaneous differential protection is usually set to operate during high fault currents, and if used, its pickup must be set according to the following criteria:

- The ***PICKUP*** setting (xCT) must be selected higher than the maximum inrush current during transformer energization.
- The ***PICKUP*** setting must be set higher than the differential current caused CT saturation during faults outside the zone of protection.
- The ***PICKUP*** setting must be selected lower than the maximum fault current during internal faults.

INSTANTANEOUS DIFF FUNCTION

Range: Disabled, Trip, Alarm, Latched Alarm, Configurable

Default: Disabled

INST DIFF PICKUP

Range: 3.00 to 30.00 x CT in steps of 0.01 x CT

Default: 10.00 x CT

This setting defines the pickup level of the differential current required for operation.

INST DIFF BLOCK

Range: Any FlexLogic operand

Default: Off

INST DIFF OUTPUT RELAYS

Range: Do Not Operate, Operate

Default: Do Not Operate

The menu includes a list of available output relays to be set for operation or no operation upon protection operation.

> *Note:*
> *The output relays selected under the Breaker menu for breaker trip need to be reselected if the Percent Differential function is set to `Trip`. These output relays will not be operational even if selected to operate if the Percent Differential function is set to `Configurable`.*

EVENTS

Range: Disabled, Enabled

Default: Disabled

TARGETS

Range: Disabled, Self-Reset, Latched

Default: Latched

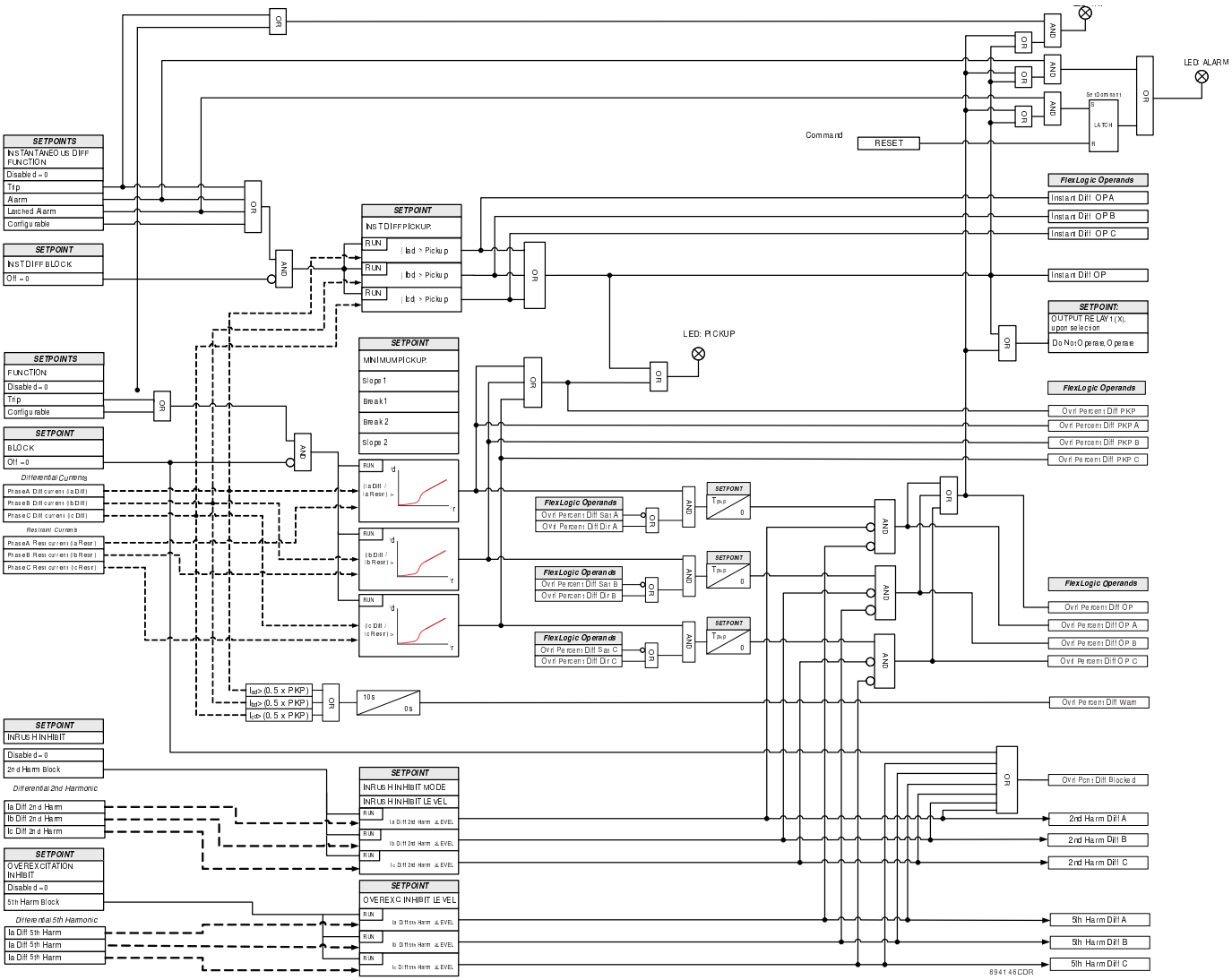

Figure 110: Percent and Instantaneous Differential Protection Logic Diagram

8.3.3 GENERATOR UNBALANCE (46)

Rotor heating in generators may occur due to unbalance (negative sequence) current. Generators have very specific limits where unbalanced current is concerned (Refer ANSI C50.13).

The generator unbalance element has an inverse time overcurrent curve which is typically used for tripping and a definite time overcurrent curve typically used for alarm purposes to protect the generator rotor from overheating due to the presence of negative sequence currents.

The inverse time stage operating characteristic is defined by the following equation:

$$T = \frac{K}{\left(I_2 / RatedFLA\right)^2}$$

where:

- I_2 = negative sequence current
- FLA is the generator rated full load current
- K = negative sequence capability constant from the generator manufacturer depending on size and design
- T = time in seconds when I_2 > pickup (minimum 250 ms, maximum defined by setpoint)

> *Note:*
> *Unusually high negative sequence current levels may be caused by incorrect phase CT wiring.*

Path: ***Setpoints*** > ***Protection*** > ***Group 1(6)*** > ***Generator*** > ***Generator Unbalance***

SIGNAL INPUT

Range: CT Bank 1-J1, CT Bank 2-K1

Default: CT Bank 1-J1

This setting provides the selection for the 3-Phase CT bank inputs. This setting allows applying this element either on terminal side or neutral side of the Generator.

TRIP FUNCTION

Range: Disabled, Trip, Configurable

Note: Relays with firmware version 4 and later have a `Latched Trip` *option*

Default: Disabled

This setting enables the Generator Unbalance Trip functionality. When the Trip function is selected and the element operates, output relay #1 "Trip" operates but the "ALARM" LED does not turn on.

When the Configurable function is selected, neither the Trip output, nor the ALARM LED turns on automatically. They must be configured using their own menus and FlexLogic™ operands.

TRIP PICKUP

Range: 0.00 to 100.00 % FLA in steps of 0.01

Default: 8.00 % FLA

This setting defines the pickup value of the trip element. Pickup value is given in negative sequence current as percentage of generator rated full load current.

> *Note:*
> *This setting should be greater than the corresponding setting for the alarm stage.*

CONSTANT K

Range: 0.00 to 100.00 in steps of 0.01

Default: 1.00

This setting is the negative sequence capability constant. This value is normally provided by the generator manufacturer (see ANSI C50.13) depending on size and design.

MAXIMUM TIME

Range: 0 to 1000 s in steps of 1 s

Default: 600 s

The negative sequence overcurrent **Maximum Time setting** defines the maximum time that any value of negative sequence current in excess of the pickup value is allowed to persist before a trip is issued. This setting can be applied to limit the maximum tripping time for low level unbalances.

Note:
Small power system transients or switching device operation can generate spurious negative sequence current that can result in the false operation of the Current Unbalance element. In order to prevent false operation of the element, minimum time is set to a fixed value of 250 ms.

RESET TIME

Range: 0.00 to 1000.00 s in steps of 0.01 s

Default: 227.00 s

This setting defines the linear reset time of the trip element time accumulator. It is the maximum reset time from the threshold of tripping based on the generator unbalance inverse curve. The reset time has an accumulator/integrator to represent the thermal memory counter which increments linearly if generator unbalance current is above threshold, and decrements linearly if it below threshold. The "Unbal DPO" operand is set to high when thermal memory counter resets to zero.

TRIP OUTPUT RELAY

Range: Do Not Operate, Operate

Default: Do Not Operate

Any assignable output relay can be selected to operate upon the generator unbalance operation. The operation of these general relays is programmed by the user. Each relay can be selected to become either energized or de-energized when operated, and to operate as latched, self-resetting or pulsed.

ALARM FUNCTION

Range: Disabled, Alarm, Latched Alarm

Default: Disabled

This setting enables the generator unbalance Alarm functionality.

When the Alarm function is selected and the element operates, the "ALARM" LED flashes; it self-resets when the operating conditions are cleared.

When the Latched Alarm function is selected and the element operates, the "ALARM" LED flashes during the operating condition, and is steadily lit after the conditions are cleared. The "ALARM" LED can be cleared by issuing a Reset command. Output relay #1 "Trip" will not operate if the Alarm or Latched Alarm setting is selected.

ALARM PICKUP

Range: 0.00 to 100.00 % FLA in steps of 0.01

Default: 3.00 % FLA

This setting specifies a pickup for the alarm function. The definite time overcurrent curve would normally be used to generate an alarm to prompt an operator to take some corrective action. This element would typically be set at a safe margin below the trip pickup setting.

ALARM DELAY

Range: 0.00 to 600.00 s in steps of 0.01 s

Default: 0.50 s

This setting specifies a time delay for the alarm function. This is the minimum operate time of the alarm element. This is set to prevent nuisance alarms during system faults.

ALARM OUTPUT RELAY

Range: Do Not Operate, Operate

Default: Do Not Operate

Any assignable output relay can be selected to operate upon generator unbalance operation. The operation of these general relays is programmed by the user. Each relay can be selected to become either energized or de-energized when operated, and to operate as latched, self-resetting or pulsed.

BLOCK

Range: Off, Any FlexLogic operand

Default: Off

EVENT

Range: Enabled, Disabled

Default: Enabled

TARGET

Range: Self-reset, Latched, DIsabled

Default: Self-reset

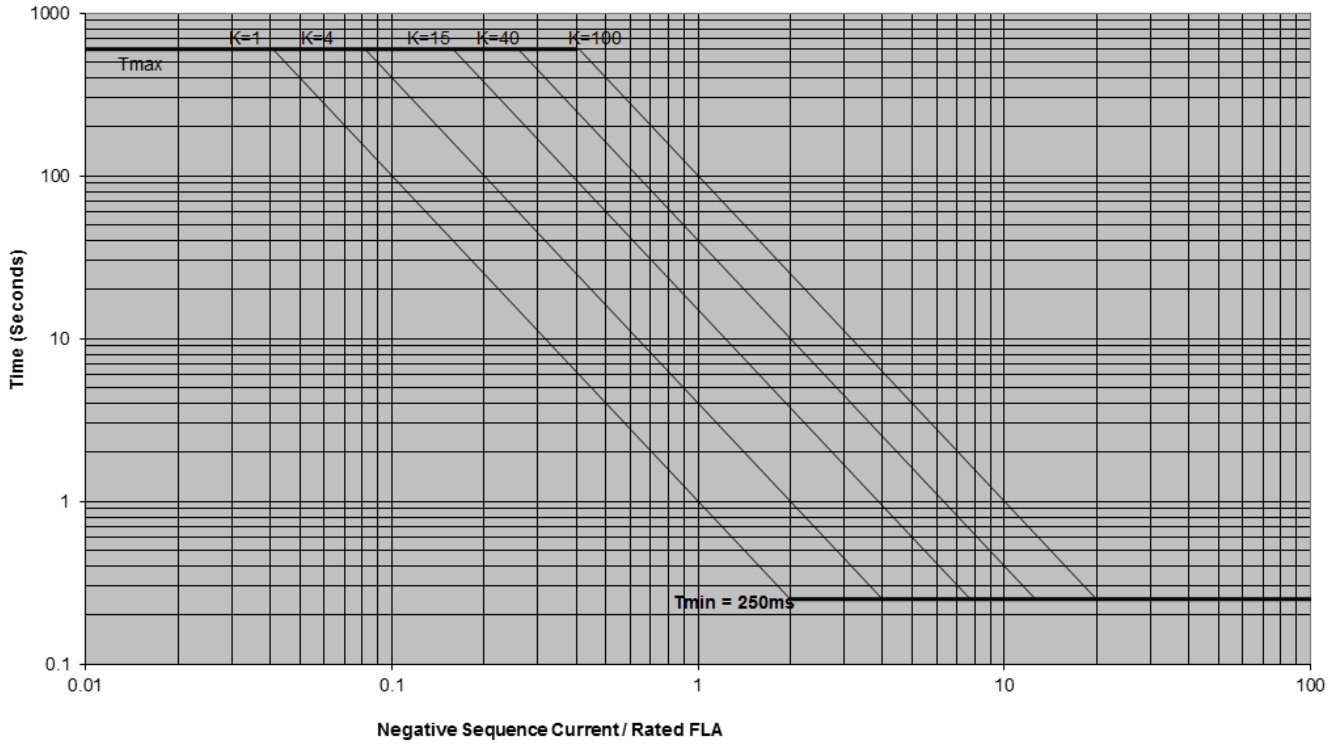

Figure 111: Generator Unbalance Inverse TIme Curves

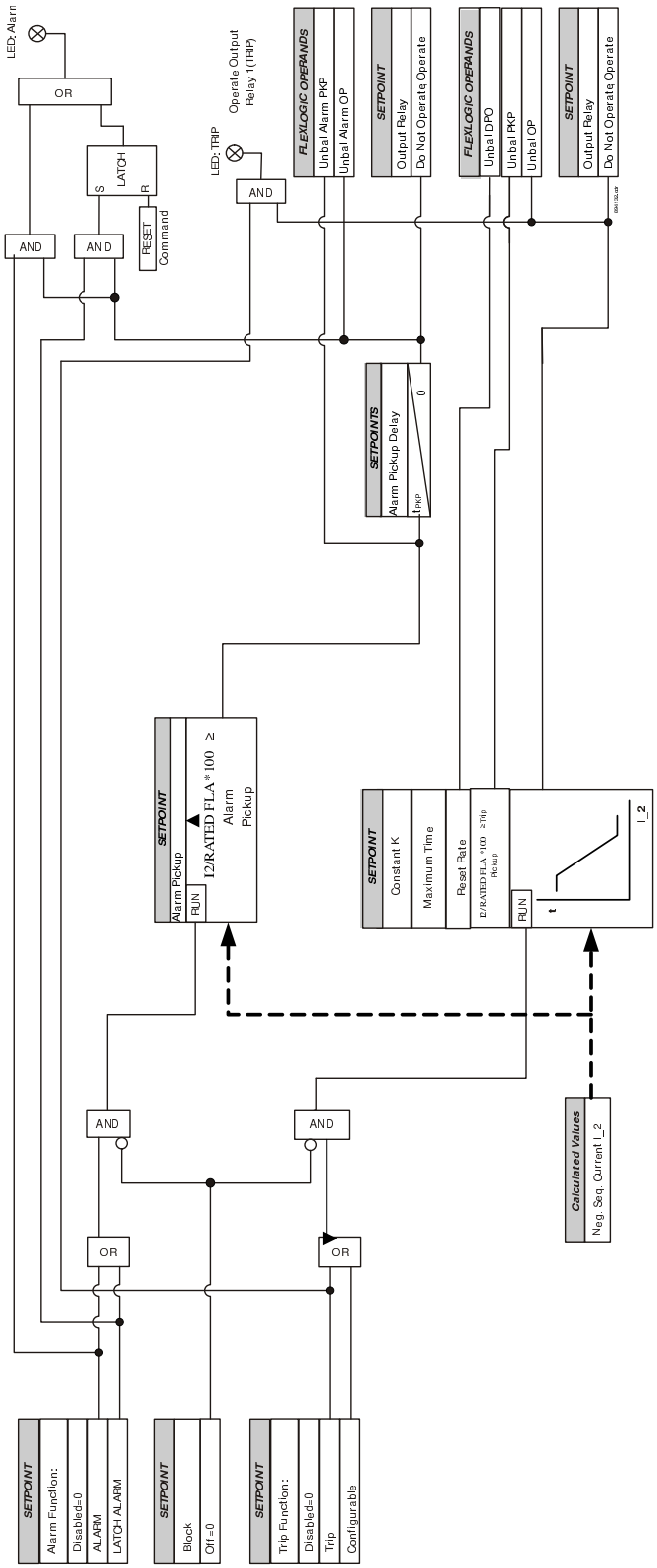

Figure 112: Generator Unbalance Logic Diagram

8.3.4 INADVERTENT ENERGIZATION (50/27)

This element provides protection against inadvertent energization also known as accidental energization. The Inadvertent Energization feature may be armed when all of the phase voltages fall below the undervoltage pickup

level and/or the unit is offline. When the feature is armed, if any one of the phase currents measured at the output CTs exceeds the overcurrent level programmed, an operate will occur.

Protection can be provided for poor synchronization by using the ***U/V or Offline*** arming signal. During normal synchronization, there should be relatively low current measured. If however, synchronization is attempted when conditions are not appropriate, a large current that is measured within 250 ms after the generator is placed online would result in an operate.

> *Note:*
> *This feature requires 5 s to arm, and 250 ms to disarm.*

Path: ***Setpoints*** > ***Protection*** > ***Group 1(6)*** > ***Generator*** > ***Inadvertent Energization***

FUNCTION

Range: Disabled, Trip, Alarm, Latched Alarm, Configurable

Note: Relays with firmware version 4 and later have a `Latched Trip` *option*

Default: Disabled

ARMING MODE

Range: U/V and Offline, U/V or Offline

Default: U/V and Offline

The element is armed based on the U/V condition and/or Offline status.

O/C PICKUP

Range: 0.050 to 30.00 x CT in steps of 0.01 x CT

Default: 0.30 x CT

This setting is the overcurrent level of any phase currents required to allow the element to operate.

U/V PICKUP

Range: 0.00 to 1.50 x VT in steps of 0.01 x VT

Default: 0.50 x VT

This setting sets the undervoltage level of three-phase voltage required to arm the element. When this setting is zero and ***ARMING MODE*** is set to `U/V` or `Offline`, the undervoltage supervision will be bypassed and the arming mode will check the generator Offline status only.

BLOCK

Range: Off, Any FlexLogic operand

Default: Off

OUTPUT RELAY X

Range: Do Not Operate, Operate

Default: Do Not Operate

EVENTs

Range: Enabled, Disabled

Default: Enabled

TARGETs

Range: Self-reset, Latched, DIsabled

Default: Self-reset

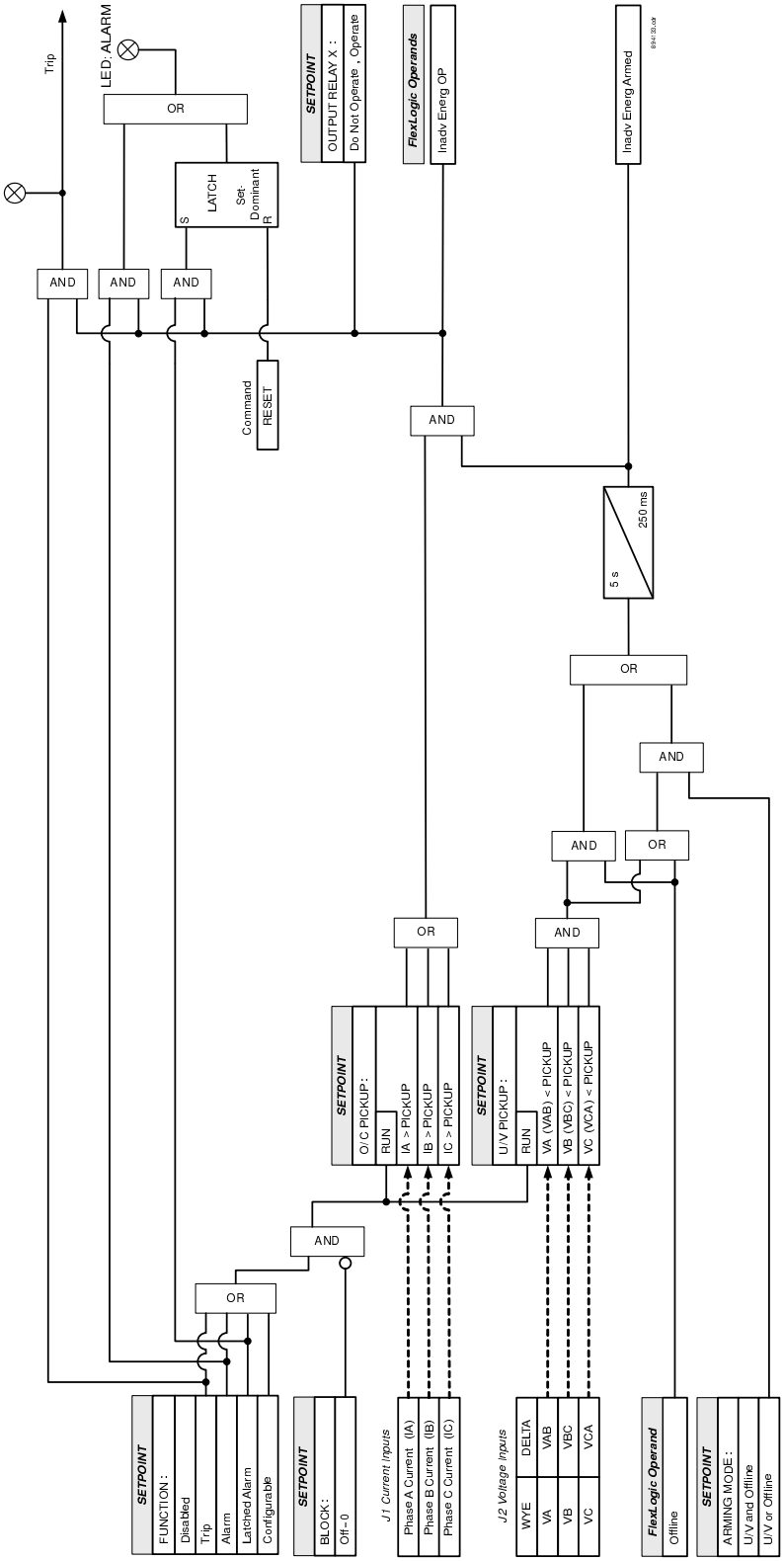

Figure 113: Inadvertent Energization Logic Diagram

8.3.5 LOSS OF EXCITATION (40)

Typically, a synchronous machine has an excitation system, which supplies DC (Direct Current) to energize the rotor/field winding. This excitation to the machine rotor may be completely or partially lost due to various abnormal conditions, such as field circuit open or short, loss of supply to the excitation system, or unintentional trip of a field breaker and so on. Due to loss of excitation, the synchronous machine may act as an induction machine, which may cause the machine to over-speed (above synchronous speed) and also draw reactive power (Var) from the system. Therefore, Loss Of Excitation (LOE) protection is applied to protect synchronous machines from over-speeding, as well as to recover systems from voltage collapse.

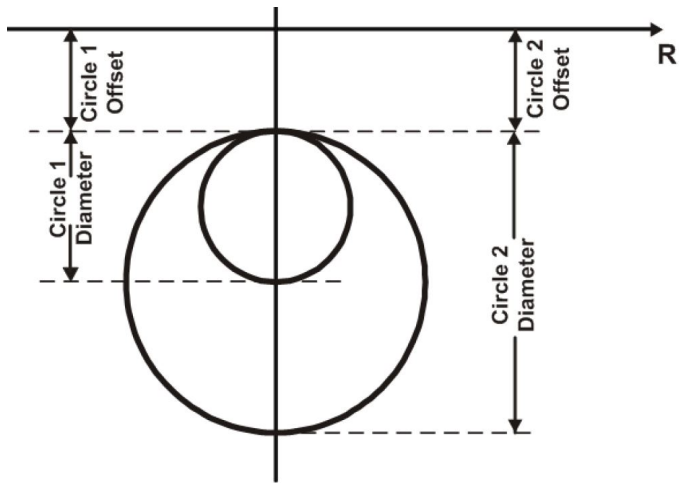

Figure 114: Loss of excitation Characteristic

Loss of excitation protection is achieved using positive sequence impedance measurements (from voltage and currents), and two inverted offset (Mho) circles, as shown. User configurable Under-Voltage (UV) supervision and sufficient positive sequence current (>0.05 x CT) are applied for additional protection of this element. Each individual circle characteristic can be applied independently. In the case where a circle element is enabled and the measured positive sequence impedance falls within this circle, the element operates with the corresponding time delay setting. Further, a 20 ms reset delay is applied to the element logic which enhances protection dependability, especially when measured impedance jitters around a circle boundary.

> *Note:*
> *All impedance (in ohms) settings refer to the relay side impedance quantity, i.e. the CT/VT secondary side when looking into the machine. Although the setting values are in positive ohms, this protection function is looking in to the generator, and hence the circle characteristics are shown inverted/reversed.*

Base impedance should be calculated on secondary side.

$$Z_{base,prim} = \frac{base\ kV^2}{base\ MVA}\ in\ \Omega$$

$$Z_{base,sec} = Z_{base,prim} * \frac{CT\ Ratio}{VT\ Ratio}\ in\ \Omega$$

The following is the guideline used to derive the setting of this element.

> *Note:*
> *The IEEE C37.102-2006 (IEEE guide for AC Generator Protection) provides typical practices to set this element*

The inner circle (Circle 1) diameter is set to machine base impedance (i.e. 1 pu), which considers the loss of field during full loading to medium loading of the machine. An offset is one half of the direct axis transient reactance (X'd) - both impedances referring to the relay side. The corresponding time delay for the inner circle needs to be higher than the worst case power swing scenario, and hence this value is determined from stability studies (typically, this value may be in the range of 0.2 s to 0.5 s).

$$Circle\ 1\ Diameter = Z_{base,sec}\ in\ \Omega$$

$$Circle\ 1\ Offset = \frac{X'_{d\ (pu)}}{2} * Z_{base,sec}\ in\ \Omega$$

On the other hand, the outer circle (e.g. Circle 2) diameter is set to the synchronous reactance of the machine (Xd) and an offset equal to one half of the direct axis transient reactance (X'd) - both impedances referring to the relay side. This allows the machine to be protected during light load conditions or with reduced field excitation. The corresponding time delay for the outer circle should be high enough to prevent mis-operations due to power swings, and hence this value is determined from stability studies (typically, this value may be in the range of 0.5 s to 2 s).

$$Circle\ 2\ Diameter = X_{d(pu)} * Z_{base,sec}\ in\ \Omega$$

$$Circle\ 2\ Offset = \frac{X'_{d(pu)}}{2} * Z_{base,sec}\ in\ \Omega$$

Path: ***Setpoints*** > ***Protection*** > ***Group 1(6) > Generator> Loss of Excitation***

SIGNAL INPUT

Range: Positive Impedance 1, Positive Impedance 2

Default: Positive Impedance 1

The signal input selection to apply this element at the terminal or neutral side CT. The CT and VT sources used by Positive impedance 1 and 2 are specified in ***Metering*** > ***Impedance*** > ***Pos Seq Impedance***. Positive sequence impedance 1 is calculated using 3-phase J1 currents and 3-phase J2 voltages. With K-slot order code option, positive sequence impedance 2 is calculated using 3-phase K1 currents and 3-phase J2 voltages.

CIRCLE 1 FUNCTION

Range: Disabled, Trip, Alarm, Latched Alarm, Configurable

Note: Relays with firmware version 4 and later have a `Latched Trip` *option*

Default: Disabled

CIRCLE 1 DIAMETER

Range: 0.1 to 300.0 ohms in steps of 0.1 ohms

Default: 25.0 ohms

This setting is the diameter of the Circle 1 characteristic in ohms, referring to the CT/VT secondary (relay).

CIRCLE 1 OFFSET

Range: 0.1 to 300.0 ohms in steps of 0.1 ohms

Default: 2.5 ohms

This setting is the offset of the Circle 1 characteristic in ohms, referring to the CT/VT secondary (relay).

CIRCLE 1 PICKUP DELAY

Range: 0.00 to 600.00 s in steps of 0.01 s

Default: 0.30 s

CIRCLE 1 UV SUPERVISION

Range: Disabled, Enabled

Default: Disabled

Under-voltage supervision of the element can be enabled or disabled. If Enabled for Circle 1, the positive sequence voltage at the machine terminal should be lower than setting value in “UV Supervision” in order to execute the Circle 1 impedance element, i.e. LOE Circle 1 is enabled only in case voltage drops below the “UV supervision” level. This additional check ensures the drop in machine terminal voltage in case of loss of excitation.

CIRCLE 1 OUTPUT RELAY X

Range: Operate, Do Not Operate

Default: Do Not Operate

CIRCLE 2 FUNCTION

Range: Disabled, Trip, Alarm, Latched Alarm, Configurable

Note: Relays with firmware version 4 and later have a `Latched Trip` *option*

Default: Disabled

CIRCLE 2 DIAMETER

Range: 0.1 to 300.0 ohms in steps of 0.1 ohms

Default: 35.0 ohms

This setting is the diameter of the Circle 2 characteristic in ohms, referring to the CT/VT secondary (relay).

CIRCLE 2 OFFSET

Range: 0.1 to 300.0 ohms in steps of 0.1 ohms

Default: 2.5 ohms

This setting is the offset of the Circle 2 characteristic in ohms, referring to the CT/VT secondary (relay).

CIRCLE 2 PICKUP DELAY

Range: 0.00 to 600.00 s in steps of 0.01 s

Default: 1.00 s

CIRCLE 2 UV SUPERVISION

Range: Disabled, Enabled

Default: Disabled

Under-voltage supervision of the element can be enabled or disabled. If Enabled for Circle 2, the positive sequence voltage at the machine terminal should be lower than setting value in “UV Supervision” in order to execute the Circle 2 impedance element, i.e. LOE Circle 1 is enabled only in case voltage drops below the “UV supervision” level. This additional check ensures the drop in machine terminal voltage in case of loss of excitation.

CIRCLE 2 OUTPUT RELAY X

Range: Operate, Do Not Operate

Default: Do Not Operate

UV SUPERVISION

Range: 0.00 to 1.50 x VT in steps of 0.01 x VT

Default: 0.70 x VT

This setting specifies the pickup value for under-voltage supervision for one or both circles (if enabled).

VTFF SUPERVISION

Range: Disabled, VT Fuse Failure 1, VT Fuse Failure 2

Default: Disabled

A VT fuse failure could cause a maloperation of a distance element unless the element is supervised by the VTFF element. VTFF Supervision is only available if VT Fuse Failure 1(2) function is enabled, otherwise this setpoint is hidden.

BLOCK

Range: Off, Any FlexLogic operand

Default: Off

EVENTS

Range: Enabled, Disabled

Default: Enabled

TARGETS

Range: Self-reset, Latched, Disabled

Default: Latched

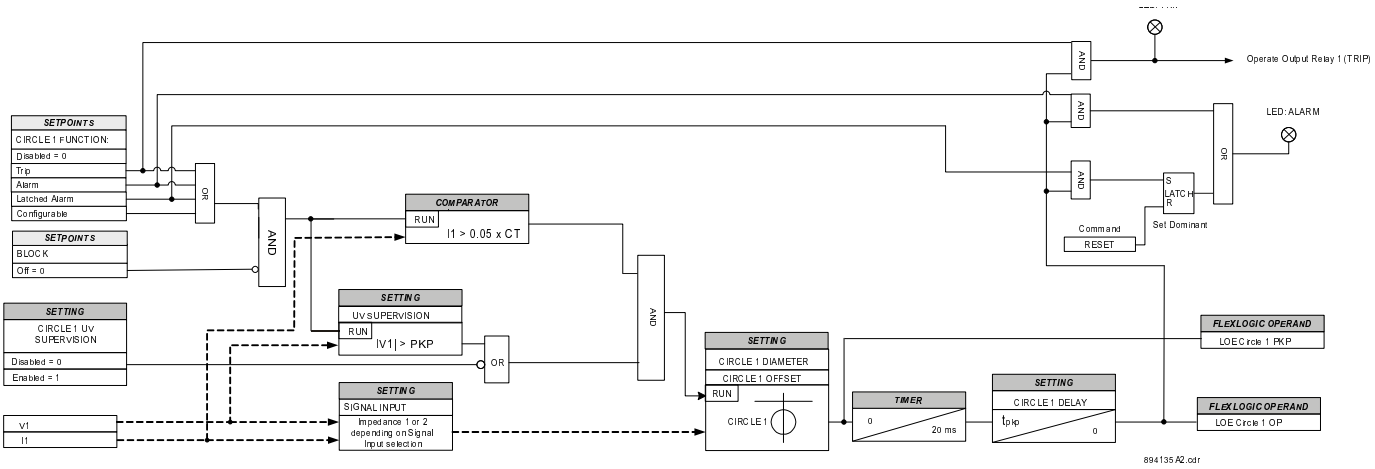

Figure 115: Loss of Excitation Logic Diagrams: circle 1

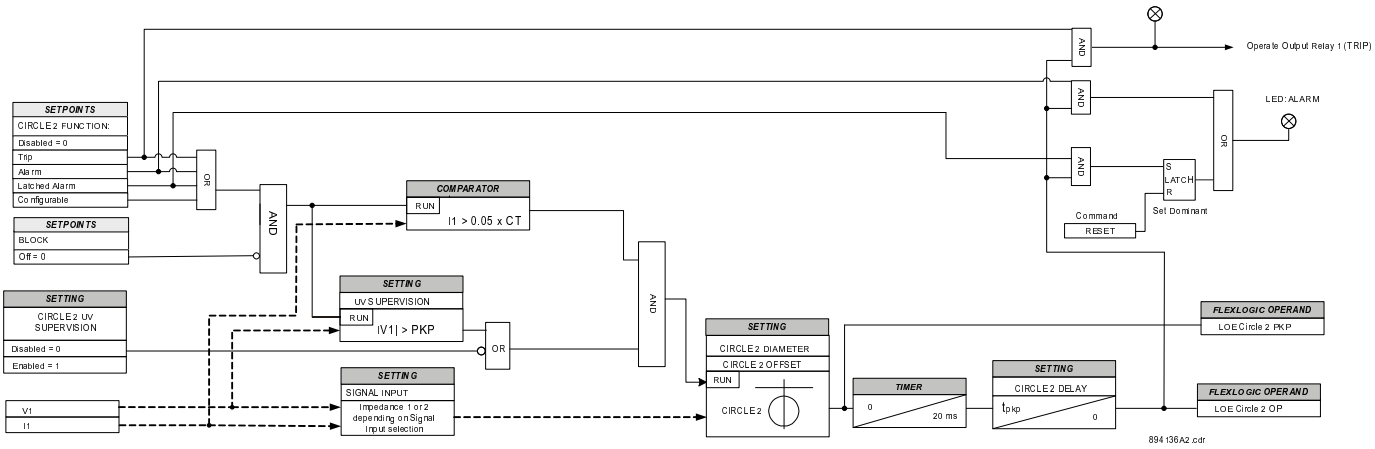

Figure 116: Loss of Excitation Logic Diagrams: circle 2

8.3.6 THIRD HARMONIC NEUTRAL UNDERVOLTAGE (27TN)

The Third Harmonic Neutral Undervoltage element detects a loss of third harmonic voltage at the generator neutral. The percentage of stator winding covered by this function depends on the pickup setting and the amount of third harmonic generated by the machine at the time of the fault. A settable window of forward real power can supervise this element for enhanced security. The element is also supervised by positive sequence voltage measured at the generator output terminals. This element can be used with either wye or delta connected VTs on the terminal side and requires that the machine neutral voltage is connected via an auxiliary voltage channel of the relay Ax VT Bnk1-J2 bank input.

> *Note:*
> *The setpoint Aux VT Connection (under **Setpoints** > **System** > **Voltage Sensing** > **Ph VT Bnk1-J2**) must be selected as* `VN` *for this element*

Path: ***Setpoints*** > ***Protection*** > ***Group 1*** > ***Generator*** > ***3rd Harm Neutral UV***

TRIP FUNCTION

Range: Disabled, Trip, Configurable

Note: Relays with firmware version 4 and later have a `Latched Trip` *option*

Default: Disabled

This setting enables the Third Harmonic Neutral Undervoltage trip functionality.

TRIP PICKUP

Range: 0.10 to 20.00 V in steps of 0.01 V

Default: 1.00 V

This setting specifies the trip pickup level in VT secondary for the magnitude of the 3rd harmonic of the neutral voltage. The magnitude of the 3rd harmonic voltage at the neutral point can be monitored under **Metering > Generator > Stat Gnd 3rd Harm**. Measuring the actual value of the operating quantity for a specific machine under variety of load conditions is helpful when selecting the pickup threshold for this feature.

TRIP PICKUP DELAY

Range: 0.00 to 600.00 s in steps of 0.01 s

Default: 1.00 s

This setting specifies a time delay for the trip function. Once the operating quantity 3rd Harm VN is lower than the Trip Pickup level for the Trip Pickup Delay, a trip occurs indicating a fault condition.

TRIP RELAY

Range: Do Not Operate, Operate

Default: Do Not Operate

ALARM FUNCTION

Range: Disabled, Alarm, Latched Alarm

Default: Disabled

This setting enables the Third Harmonic Neutral Undervoltage alarm functionality.

ALARM PICKUP

Range: 0.1 to 20.00 V in steps of 0.01 V

Default: 0.50 V

This setting specifies the alarm pickup level for the magnitude of the 3rd harmonic of the neutral voltage.

> *Note:*
> *Trip and alarm pickup levels are set in secondary voltage.*

ALARM PICKUP DELAY

Range: 0.00 to 600.00 s in steps of 0.01 s

Default: 1.00 s

This setting specifies a time delay for the alarm function. Once the operating quantity 3rd Harm VN is lower than the Alarm Pickup level for the Alarm Pickup Delay, an alarm occurs indicating a fault condition.

ALARM RELAY

Range: Do Not Operate, Operate

Default: Operate

BLOCKING MIN POWER

Range: 0.000 to 1.250 x Rated in steps of 0.001

Default: 0.200 x Rated

This setting specifies the minimum real power that inhibits this element. If the measured power is above this setting but below the Blocking Max Power setting, the element is blocked. This setting applies to three-phase real power where the rated real generator power is the base unit.

> *Note:*
> *If the Blocking Min Power is set to “0.000”, then the element does not operate for all power values that are less than the Blocking Max Power setting.*

BLOCKING MAX POWER

Range: 0.000 to 1.250 x Rated in steps of 0.001

Default: 0.200 x Rated

This setting specifies the maximum real power that inhibits this element. If the measured power is below this setting but above the Blocking Min Power setting, the element is blocked. This setting applies to three-phase real power, where the rated real generator power is the base unit.

Note:
The base quantity (Rated) is the rated real power and calculated as:

Note:
Rated Real Power = Rated MVA x Rated Power Factor

Note:
Rated MVA and Rated Power Factor are programmed under ***Setpoints > System > Generator****.*

BLOCKING LOW VOLTAGE

Range: 0.00 to 1.50 x VT in steps of 0.01

Default: 0.50 x VT

This setting specifies the minimum voltage that allows this element to run. If the measured voltage is below, the element is blocked. This setting applies to the positive sequence voltage where Phase VT Secondary programmed under **Setpoints > System > Voltage Sensing** is the base unit.

BLOCK

Range: FlexLogic operand

Default: Off

EVENTS

Range: Enabled, Disabled

Default: Enabled

TARGETS

Range: Self-reset, Latched, Disabled

Default: Latched

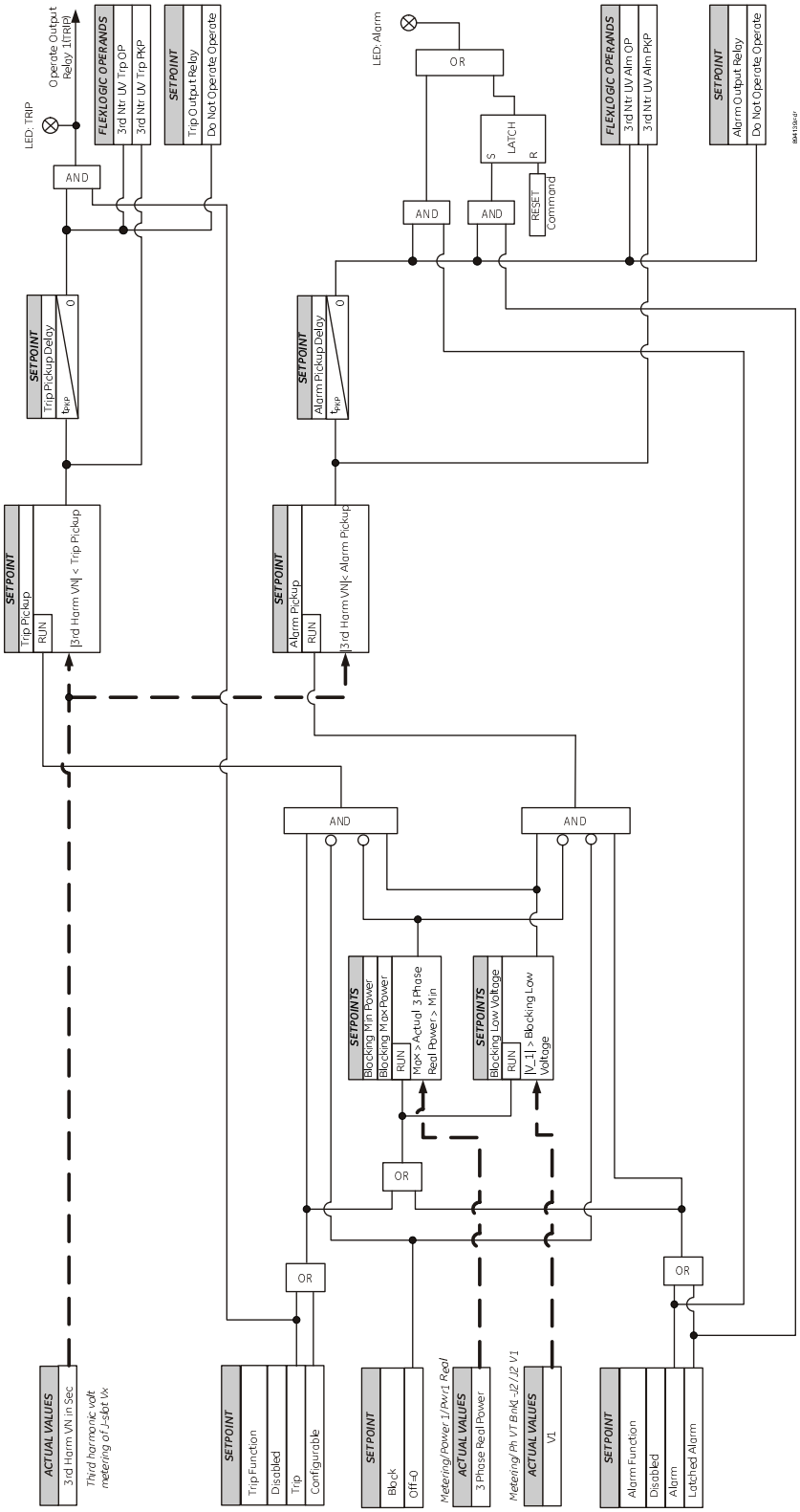

Figure 117: Third Harmonic Neutral UV logic diagram

8.3.7 THIRD HARMONIC VOLTAGE DIFFERENCE

This element responds to third harmonic voltage measured at the generator neutral and output terminals. When used in conjunction with the neutral overvoltage (fundamental frequency) element, it provides 100% ground fault

protection of the stator windings. Since the amount of third harmonic voltage that appears in the neutral is both load and machine dependent, the protection method of choice is an adaptive method. The following formula is used to create an adaptive operating quantity based on the amount of third harmonic that appears at the generator terminals.

$$\frac{|V_{N(3rd)}|}{|V_{N(3rd)}+V_{0(3rd)}|} < \text{Pickup and } \frac{|V_{0(3rd)}|}{|V_{N(3rd)}+V_{0(3rd)}|} > 1\text{- Pickup and } |V_{N(3rd)} + V_{0(3rd)}| > \text{Supervision}$$

Where:

- $V_{N(3rd)}$ is a magnitude of the the 3rd harmonic in the voltage measured at the machine neutral point measured via an auxiliary channel of the VT bank
- $V0_{(3rd)}$ is a magnitude of the 3rd harmonic in the zero-sequence voltage measured at the machine terminals.

Note:
*The setpoint Aux VT Connection (under **Setpoints** > **System** > **Voltage Sensing** > **Ph VT Bnk1-J2**) must be selected as* `VN` *for this element*

Note:
This element requires wye-connected VTs for measurement of the third harmonic in the zero-sequence voltage at the generator output terminals.

Path: ***Setpoints*** > ***Protection*** > ***Group 1*** > ***Generator*** > ***3rd Harm Voltage Difference***

TRIP FUNCTION

Range: Disabled, Trip, Configurable

Note: Relays with firmware version 4 and later have a `Latched Trip` *option*

Default: Disabled

This setting enables the Third Harmonic Voltage Difference trip functionality.

TRIP PICKUP

Range: 0.005 to 0.900 in steps of 0.001

Default: 0.100

This setting specifies a pickup level for the operating quantity. It may be beneficial to measure the operating quantity under various load conditions for a particular machine in order to optimize this setting. This can be achieved using the actual values menu..

TRIP PICKUP DELAY

Range: 0.00 to 600.00 s in steps of 0.01 s

Default: 0.50 s

This setting specifies a time delay for the trip function. A trip will occur once the operating conditions remains valid for the Trip Pickup Delay time.

TRIP SUPV

Range: 0.5 to 30.0 V in steps of 0.1 V

Default: 5.0 V

This setting specifies a signal level supervision for the vectorial sum of the third harmonic at the machine neutral and the zero-sequence terminal voltage. The safe value of this setting can be established after putting a given

machine into service and reading the quantity from the relay under actual values menu **(Metering > Generator > Stat Gnd 3rd Harm)**.

TRIP RELAY

Range: Do Not Operate, Operate

Default: Do Not Operate

ALARM FUNCTION

Range: Disabled, Alarm, Latched Alarm

Default: Disabled

This setting enables the Third Harmonic Voltage Difference alarm functionality.

ALARM PICKUP

Range: 0.005 to 0.900 V in steps of 0.001

Default: 0.150

ALARM PICKUP DELAY

Range: 0.00 to 600.00 s in steps of 0.01 s

Default: 1.00 s

This setting specifies a time delay for the alarm function. An alarm will be generated once the operating conditions remain valid for the Alarm Pickup Delay time.

ALARM SUPV

Range: 0.5 to 30.0 V in steps of 0.1

Default: 5.0 V

This setting specifies a signal level supervision for the vectorial sum of the third harmonic at the machine neutral and the zero-sequence terminal voltage. The safe value of this setting can be established after putting a given machine into service and reading the quantity from the relay under actual values menu **(Metering > Generator > Stat Gnd 3rd Harm)**.

ALARM RELAY

Range: Do Not Operate, Operate

Default: Operate

BLOCK

Range: FlexLogic operand

Default: Off

EVENTS

Range: Enabled, Disabled

Default: Enabled

TARGETS

Range: Self-reset, Latched, Disabled

Default: Latched

Example 1: Operating quantities under normal conditions

Consider the next figure shown. In the case of a high impedance grounded machine, the neutral resistor is typically chosen such that power dissipated in the resistor during a single line to ground fault is approximately equal to the reactive power produced by the zero sequence capacitance of the stator winding and the generator step-up low voltage winding (X_{oc}). At power system frequencies (F_n), the neutral resistance is therefore equal to X_{oc} / 3, and at 3 x F_n, the neutral resistance is X_{oc}.For analysis, assume that E_3 = 10 V, R = 5Ω, and Xc = 5Ω.

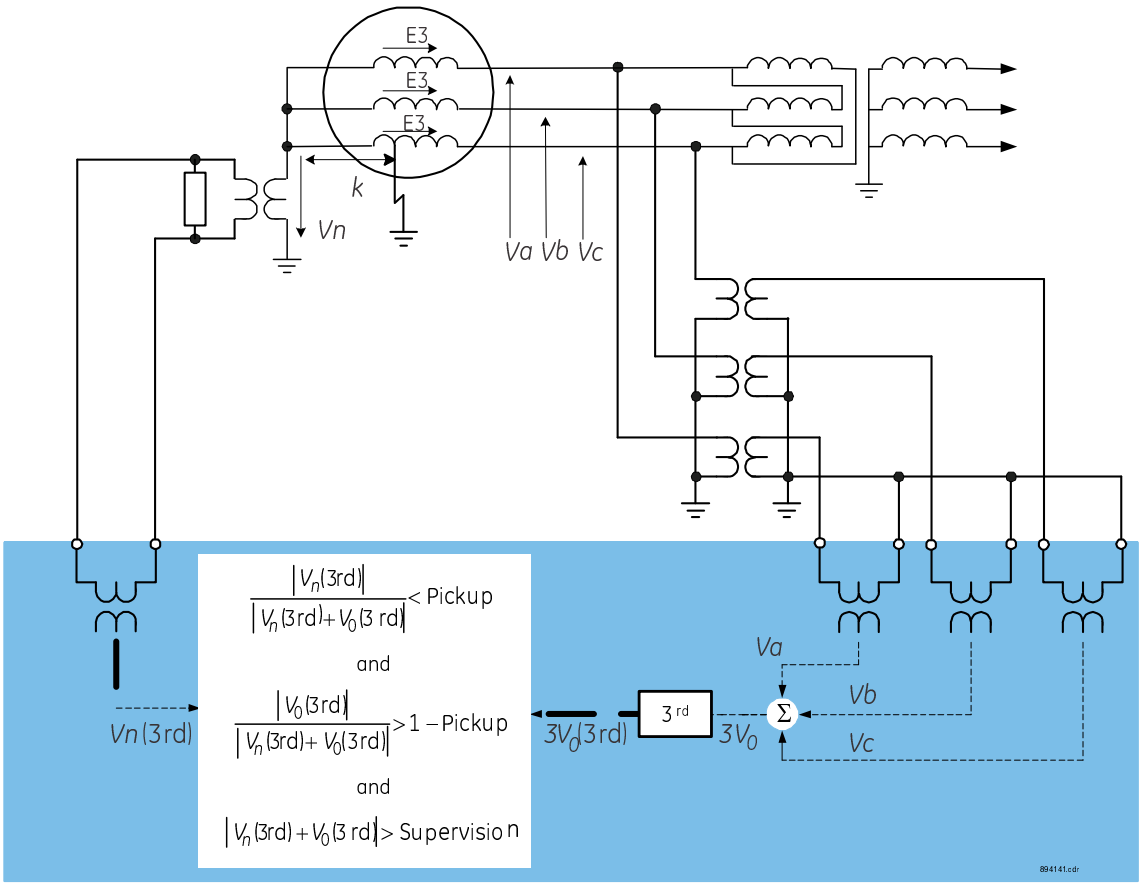

Figure 118: Third Harmonic Voltage Difference Application Example

We have the magnitude of neutral voltage V_N as:

$$V_N = \frac{R \times E_3}{R - jX_c} = \frac{10 \times 5}{5 - j5}\,V = \frac{10}{1 - j}\,V \Rightarrow |V_N| = 7.07\,V$$

and the magnitude of the neutral and zero-sequence voltages $|V_N + V_0|$ as:

$$V_0 = \frac{-jX_c \times E_3}{R - jX_c} = \frac{-j50}{5 - j5} = \frac{-j10}{1 - j} \Rightarrow V_N + V_0 = \frac{10 - j10}{1 - j}\,V$$

$$\Rightarrow |V_N + V_0| = 10\,V$$

Therefore, under the normal conditions described above, we set the operating quantities as follows:

$$Pickup > \frac{|V_N|}{|V_N + V_0|} = \frac{7.07}{10} = 0.707$$

$$Supervision < |V_N + V_0| = 10\ V$$

In actual practice, the $|V_N| / |V_N + V_0|$ ratio may vary from 0.4 to 0.85 under normal conditions. The pickup and supervision setpoints are determined by evaluating the operating quantities during a fault condition (refer to example 2 for details).

Example 2: Operating quantities for a fault at a fraction k from the neutral grounding point.

For analysis, consider the above figure and assume that E3 = 10 V, R = 5Ω, Xc = 5Ω, and k = 0.15.In this case, we have the magnitude of the neutral voltage at: VN = k x E3 = 0.15 x 10 = 1.5 and the magnitude of the neutral and zero-sequence voltages |VN + V0| as:

$$V_0 = \frac{(1-k)E_3 + (1-k)E_3 + (1-k)E_3}{3} = \frac{3 \times 0.85 \times 10}{3} = 8.5\ V$$

$$\Rightarrow V_N + V_0 = 8.5 + 1.5 = 10\ V$$

$$\Rightarrow |V_N + V_0| = 10\ V$$

V_0= ((1-k)E_(3 Therefore, for faults at a fraction k = 0.15 from the neutral grounding point, we set the operating quantities as follows:

$$Pickup > \frac{|V_N|}{|V_N + V_0|} = \frac{1.5}{10} = 0.15$$

$$Supervision < |V_N + V_0| = 10\ V$$

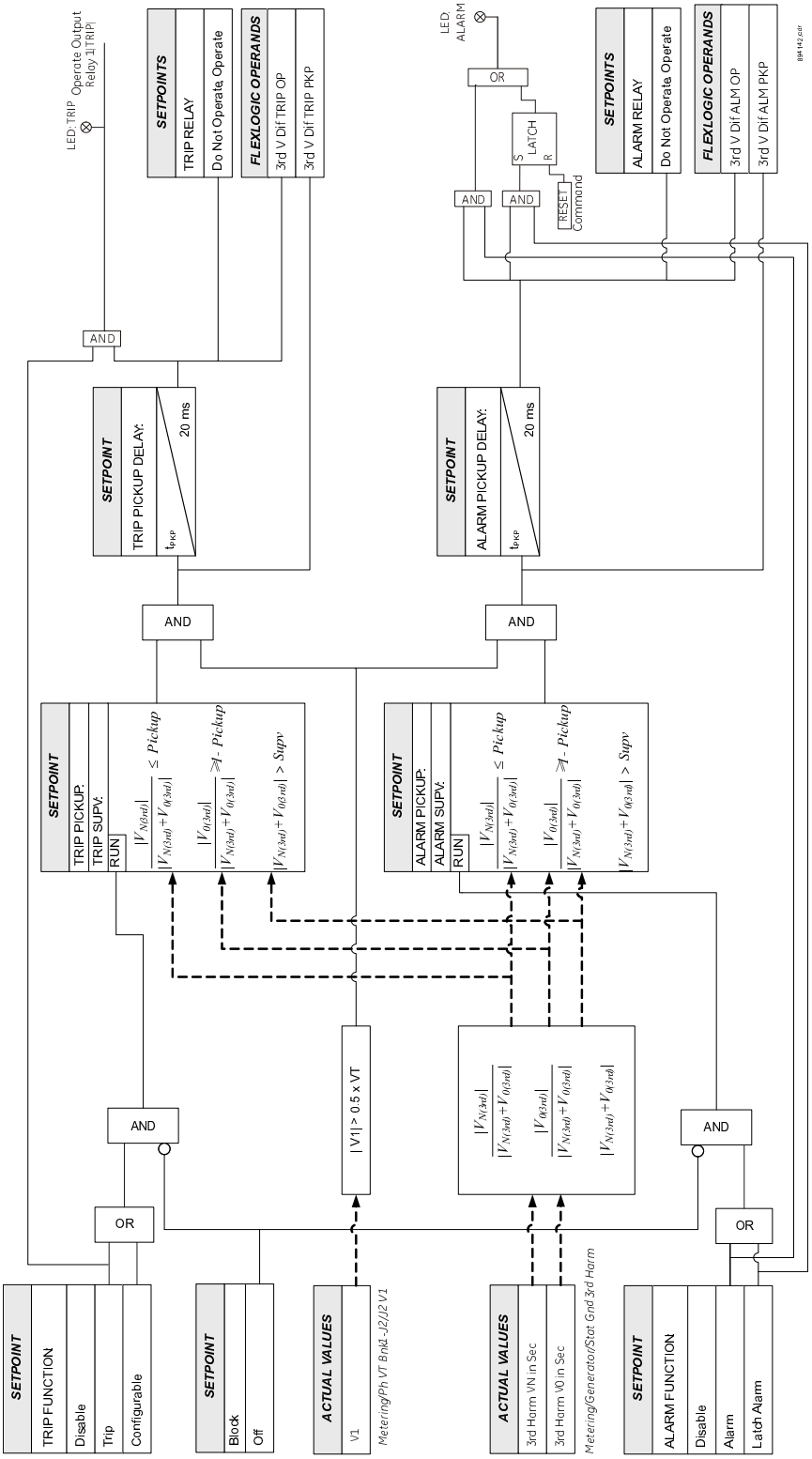

Figure 119: Third Harmonic Voltage Difference logic diagram

8.3.8 OFFLINE OVERCURRENT (50OFL)

The Offline Overcurrent feature is active only when the generator is in offline mode. In this case, it is easier to differentiate between system faults and machine faults. When neutral end CT bank measurements (Ia, Ib, Ic) are used, this element may be set to a much higher sensitivity than the differential element in order to detect high

impedance phase faults. In the event of a low impedance fault, the differential elements still shutdown the generator quickly.

> *Note:*
> *Since the breaker auxiliary contacts wired to the Breaker Status Input may not operate at exactly the same time as the main breaker contacts, the time delay should be coordinated with the difference of the operation times.*

Path: ***Setpoints*** > ***Protection*** > ***Group 1*** > ***Generator*** > ***Offline Overcurrent***

FUNCTION

Range: Disabled, Trip, Alarm, Latched Alarm, Configurable

Note: Relays with firmware version 4 and later have a `Latched Trip` *option*

Default: Disabled

SIGNAL INPUT

Range: CT Bank 1 - J1, CT Bank 2 - K1

Default: CT Bank 1 - J1

> *Note:*
> *This setting is order code dependent. In the case of two CT cards, it is recommended that the CT wired in the neutral end is selected as input for this function.*

PICKUP

Range: 0.05 to 1.00 x CT in steps of 0.01

Default: 0.05 x CT

> *Note:*
> *If the unit auxiliary transformer is on the generator side of the breaker, the pickup level must be set greater than the unit auxiliary load.*

PICKUP DELAY

Range: 0.00 to 600.00 s in steps of 0.01 s

Default: 0.08 s

OUTPUT RELAY

Range: Do Not Operate, Operate

Default: Do Not Operate

BLOCK

Range: Off, Any FlexLogic operand

Default: Off

EVENTS:

Range: Enabled, Disabled

Default: Disabled

TARGETS:

Range: Self-reset, Latched, Disabled

Default: Self-reset

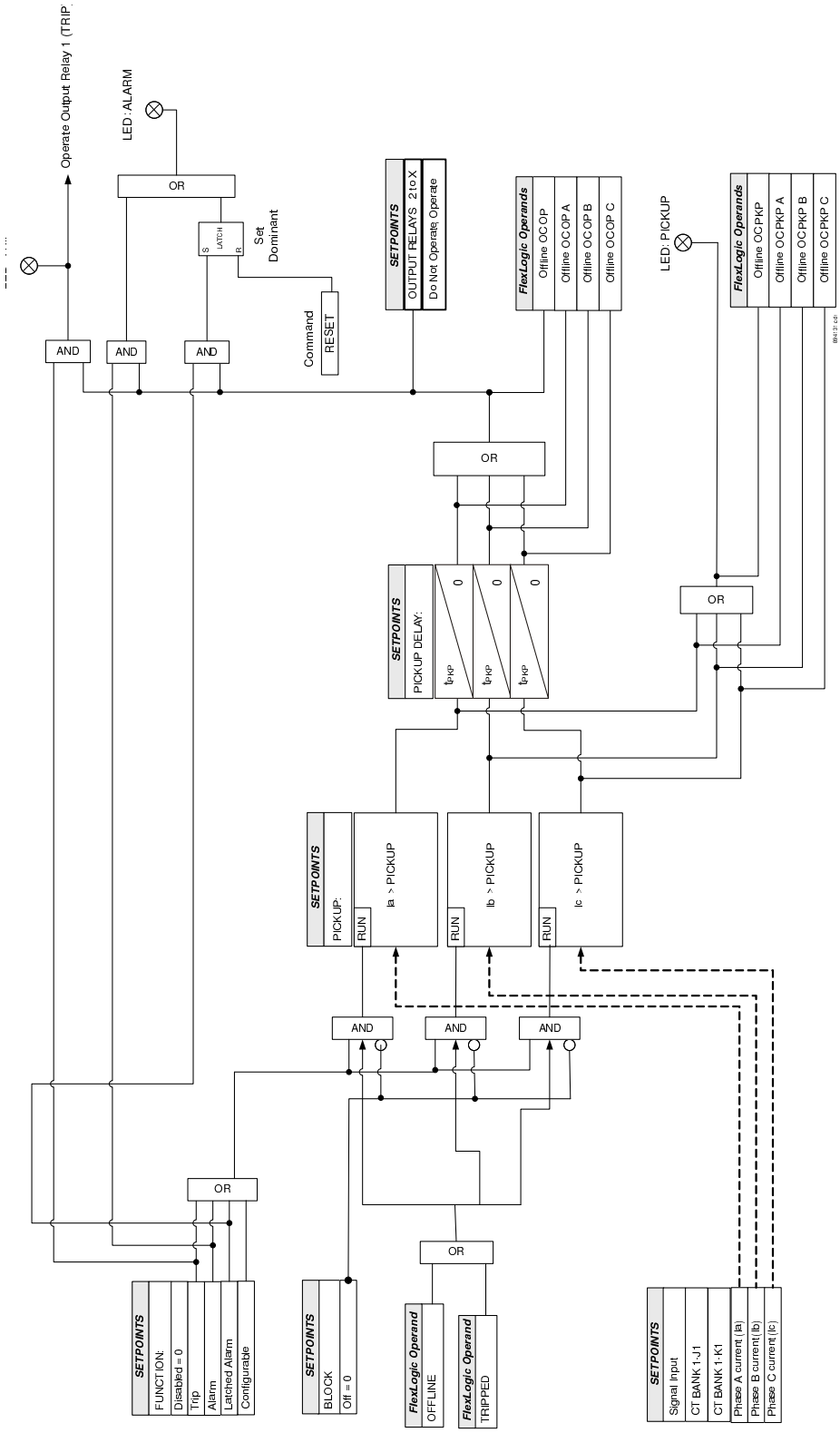

Figure 120: Offline Overcurrent Logic Diagram

8.3.9 OVERLOAD ALARM

The Overload Alarm is used to alarm abnormal load increases that may indicate problems with the process. An alarm is generated when the load current exceeds the Pickup setting for the time delay specified by the setting ***Pickup Delay***. When the current has subsided, the alarm stays active for the time specified by the setting ***Dropout Delay***.

Path:*Setpoints* > *Protection* > *Group 1* > *Generator*> *Overload Alarm*

FUNCTION

Range: Disabled, Alarm, Latched Alarm, Configurable

Default: Disabled

PICKUP

Range: 0.50 to 3.00 x FLA in steps of 0.01 x FLA

Default: 0.70 x FLA

PICKUP DELAY

Range: 0.00 to 180.00 s in steps of 0.01 s

Default: 1.00 s

DROPOUT DELAY

Range: 0.00 to 180.00 s in steps of 0.01 s

Default: 1.00 s

BLOCK

Range: Off, Any FlexLogic operand

Default: Off

OUTPUT RELAY X

Range: Operate, Do Not Operate

Default: Do Not Operate

EVENTS

Range: Disabled, Enabled

Default: Enabled

TARGETS

Range: Disabled, Self-reset, Latched

Default: Latched

Figure 121: Overload Alarm logic diagram

8.4 CURRENT ELEMENTS OVERVIEW

The 889 generator protection relay provides the following current protection elements:

- Phase time overcurrent (Phase TOC)
- Phase instantaneous overcurrent (Phase IOC)
- Phase directional overcurrent (Phase Directional OC)
- Neutral time overcurrent (Neutral TOC)
- Neutral instantaneous overcurrent (Neutral IOC)
- Neutral directional overcurrent (Neutral Directional OC)
- Ground time overcurrent (Ground TOC)
- Ground instantaneous overcurrent (Ground IOC)
- Ground directional overcurrent (Ground Directional OC)
- Sensitive ground time overcurrent (Sensitive Ground TOC)
- Sensitive ground instantaneous overcurrent (Sensitive Ground IOC)
- Sensitive ground directional overcurrent (Sens. Ground Directional OC)
- Restricted Ground Fault
- Negative sequence instantaneous overcurrent (Negative Sequence IOC)
- Negative sequence directional overcurrent (Negative Sequence Dir. OC)

The relay has six setpoint groups with phase, neutral, and ground elements per group. The programming of the time-current characteristics of these elements is identical in all cases and is only covered in this section. The required curve is established by programming a Pickup Current, Curve Shape, Curve Multiplier, and Reset Time. The Curve Shape can be either a standard shape or a user-defined shape programmed with the FlexCurve feature.

8.4.1 INVERSE TIME OVERCURRENT CURVES

The Inverse Time Overcurrent Curves used by the Time Overcurrent elements are the IEEE, IEC, GE Type IAC, ANSI, I^2t and I^4t standard curve shapes. This allows for simplified coordination.

If none of these curve shapes are adequate, FlexCurves may be used to customize the inverse time curve characteristics. The definite time curve is also an option that may be appropriate if only simple protection is required.

OVERCURRENT CURVE TYPES

IEEE	ANSI	IEC	GE TYPE IAC	OTHER
IEEE Extremely Inverse	ANSI Extremely Inverse	IEC Curve A (BS 142)	IAC Extremely Inverse	I^2t
IEEE Very Inverse	ANSI Very Inverse	IEC Curve B (BS 142)	IAC Very Inverse	I^4t
IEEE Moderately Inverse	ANSI Normally Inverse	IEC Curve C (BS 142)	IAC Inverse	FlexCurves A, B, C and D
	ANSI Moderately Inverse	IEC Short Inverse	IAC Short Inverse	Definite Time

A time dial multiplier setting allows the selection of a multiple of the base curve shape (where the time dial multiplier = 1) with the curve shape setting. Unlike the electromechanical time dial equivalent, operate times are directly proportional to the time multiplier (***TD MULTIPLIER***) setting value. For example, all times for a multiplier of 10 are 10 times the multiplier 1 or base curve values. Setting the multiplier to zero results in an instantaneous response to all current levels above Pickup.

Time Overcurrent time calculations are made with an internal *energy capacity* memory variable. When this variable indicates that the energy capacity has reached 100%, a Time Overcurrent element will operate. If less than 100% energy capacity is accumulated in this variable and the current falls below the dropout threshold of 97 to 98% of the Pickup value, the variable must be reduced. Two types of this resetting operation are available: `Instantaneous` and `Timed`.

The `Instantaneous` selection is intended for applications with other relays, such as most static relays, which set the energy capacity directly to zero when the current falls below the reset threshold.

The `Timed` selection can be used where the relay must coordinate with electromechanical relays. Relays calculate operate time corresponding to the values in the range of 1.03 to 20 multiples of the pickup current. Above 20 multiples of the pickup current, relays clamp the operate time to the value at multiple of 20, resulting in the flat part of the characteristics. Reset time is calculated in the range of 0 to 0.97 multiples of the pickup current.

IEEE CURVES

The IEEE Time Overcurrent curve shapes conform to industry standards and the IEEE C37.112-1996 curve classifications for extremely, very, and moderately inverse. The IEEE curves are derived from the formula:

$$T = TDM \times \left[\frac{A}{\left(I / I_{pickup}\right)^{p} - 1} + B \right], \quad T_{RESET} = TDM \times \left[\frac{t_r}{1 - \left(I / I_{pickup}\right)^{2}} \right]$$

Where:

- T = operate time (in seconds)
- TDM = Multiplier setting
- I = input current
- I_{pickup} = Pickup Current setting
- A, B, p = constants
- T_{RESET} = reset time in seconds (assuming energy capacity is 100% and RESET is `Timed`)
- t_r = characteristic constant

IEEE INVERSE TIME CURVE CONSTANTS

IEEE CURVE SHAPE	A	B	P	t_r
IEEE Extremely Inverse	28.2	0.1217	2.000	29.1
IEEE Very Inverse	19.61	0.491	2.000	21.6
IEEE Moderately Inverse	0.0515	0.1140	0.02000	4.85

IEEE CURVE TRIP TIMES (IN SECONDS)

TDM	CURRENT (I/I_{pickup})									
	1.5	2.0	3.0	4.0	5.0	6.0	7.0	8.0	9.0	10.0
IEEE EXTREMELY INVERSE										
0.5	11.341	4.761	1.823	1.001	0.648	0.464	0.355	0.285	0.237	0.203
1.0	22.682	9.522	3.647	2.002	1.297	0.927	0.709	0.569	0.474	0.407
2.0	45.363	19.043	7.293	4.003	2.593	1.855	1.418	1.139	0.948	0.813
4.0	90.727	38.087	14.587	8.007	5.187	3.710	2.837	2.277	1.897	1.626
6.0	136.090	57.130	21.880	12.010	7.780	5.564	4.255	3.416	2.845	2.439
8.0	181.454	76.174	29.174	16.014	10.374	7.419	5.674	4.555	3.794	3.252

TDM	CURRENT (I/I_{pickup})									
	1.5	2.0	3.0	4.0	5.0	6.0	7.0	8.0	9.0	10.0
10.0	226.817	95.217	36.467	20.017	12.967	9.274	7.092	5.693	4.742	4.065
IEEE VERY INVERSE										
0.5	8.090	3.514	1.471	0.899	0.654	0.526	0.450	0.401	0.368	0.345
1.0	16.179	7.028	2.942	1.798	1.308	1.051	0.900	0.802	0.736	0.689
2.0	32.358	14.055	5.885	3.597	2.616	2.103	1.799	1.605	1.472	1.378
4.0	64.716	28.111	11.769	7.193	5.232	4.205	3.598	3.209	2.945	2.756
6.0	97.074	42.166	17.654	10.790	7.849	6.308	5.397	4.814	4.417	4.134
8.0	129.432	56.221	23.538	14.387	10.465	8.410	7.196	6.418	5.889	5.513
10.0	161.790	70.277	29.423	17.983	13.081	10.513	8.995	8.023	7.361	6.891
IEEE MODERATELY INVERSE										
0.5	3.220	1.902	1.216	0.973	0.844	0.763	0.706	0.663	0.630	0.603
1.0	6.439	3.803	2.432	1.946	1.688	1.526	1.412	1.327	1.260	1.207
2.0	12.878	7.606	4.864	3.892	3.377	3.051	2.823	2.653	2.521	2.414
4.0	25.756	15.213	9.729	7.783	6.753	6.102	5.647	5.307	5.041	4.827
6.0	38.634	22.819	14.593	11.675	10.130	9.153	8.470	7.960	7.562	7.241
8.0	51.512	30.426	19.458	15.567	13.507	12.204	11.294	10.614	10.083	9.654
10.0	64.390	38.032	24.322	19.458	16.883	15.255	14.117	13.267	12.604	12.068

ANSI CURVES

The ANSI time overcurrent curve shapes conform to industry standards and the ANSI C37.90 curve classifications for extremely, very, and moderately inverse. The ANSI curves are derived from the following formulae:

$$T = TDM \times \left[A + \frac{B}{(I/I_{pickup}) - C} + \frac{D}{((I/I_{pickup}) - C)^2} + \frac{E}{((I/I_{pickup}) - C)^3} \right], \quad T_{RESET} = TDM \times \left[\frac{t_r}{1 - (I/I_{pickup})^2} \right]$$

Where:

- T = operate time (in seconds)
- TDM = Multiplier setting
- I = input current
- I_{pickup} = Pickup Current setting
- A to E = constants
- T_{RESET} = reset time in seconds (assuming energy capacity is 100% and RESET is `Timed`)
- t_r = characteristic constant

ANSI INVERSE TIME CURVE CONSTANTS

ANSI CURVE SHAPE	A	B	C	D	E	t_r
ANSI Extremely Inverse	0.0399	0.2294	0.5000	3.0094	0.7222	5.67
ANSI Very Inverse	0.0615	0.7989	0.3400	-0.2840	4.0505	3.88
ANSI Normally Inverse	0.0274	2.2614	0.3000	-4.1899	9.1272	5.95

ANSI CURVE SHAPE	A	B	C	D	E	t_r
ANSI Moderately Inverse	0.1735	0.6791	0.8000	-0.0800	0.1271	1.08

ANSI CURVE TRIP TIMES (IN SECONDS)

TDM	CURRENT (I/Ipickup)									
	1.5	2.0	3.0	4.0	5.0	6.0	7.0	8.0	9.0	10.0
ANSI EXTREMELY INVERSE										
0.5	2.000	0.872	0.330	0.184	0.124	0.093	0.075	0.063	0.055	0.049
1.0	4.001	1.744	0.659	0.368	0.247	0.185	0.149	0.126	0.110	0.098
2.0	8.002	3.489	1.319	0.736	0.495	0.371	0.298	0.251	0.219	0.196
4.0	16.004	6.977	2.638	1.472	0.990	0.742	0.596	0.503	0.439	0.393
6.0	24.005	10.466	3.956	2.208	1.484	1.113	0.894	0.754	0.658	0.589
8.0	32.007	13.955	5.275	2.944	1.979	1.483	1.192	1.006	0.878	0.786
10.0	40.009	17.443	6.594	3.680	2.474	1.854	1.491	1.257	1.097	0.982
ANSI VERY INVERSE										
0.5	1.567	0.663	0.268	0.171	0.130	0.108	0.094	0.085	0.078	0.073
1.0	3.134	1.325	0.537	0.341	0.260	0.216	0.189	0.170	0.156	0.146
2.0	6.268	2.650	1.074	0.682	0.520	0.432	0.378	0.340	0.312	0.291
4.0	12.537	5.301	2.148	1.365	1.040	0.864	0.755	0.680	0.625	0.583
6.0	18.805	7.951	3.221	2.047	1.559	1.297	1.133	1.020	0.937	0.874
8.0	25.073	10.602	4.295	2.730	2.079	1.729	1.510	1.360	1.250	1.165
10.0	31.341	13.252	5.369	3.412	2.599	2.161	1.888	1.700	1.562	1.457
ANSI NORMALLY INVERSE										
0.5	2.142	0.883	0.377	0.256	0.203	0.172	0.151	0.135	0.123	0.113
1.0	4.284	1.766	0.754	0.513	0.407	0.344	0.302	0.270	0.246	0.226
2.0	8.568	3.531	1.508	1.025	0.814	0.689	0.604	0.541	0.492	0.452
4.0	17.137	7.062	3.016	2.051	1.627	1.378	1.208	1.082	0.983	0.904
6.0	25.705	10.594	4.524	3.076	2.441	2.067	1.812	1.622	1.475	1.356
8.0	34.274	14.125	6.031	4.102	3.254	2.756	2.415	2.163	1.967	1.808
10.0	42.842	17.656	7.539	5.127	4.068	3.445	3.019	2.704	2.458	2.260
ANSI MODERATELY INVERSE										
0.5	0.675	0.379	0.239	0.191	0.166	0.151	0.141	0.133	0.128	0.123
1.0	1.351	0.757	0.478	0.382	0.332	0.302	0.281	0.267	0.255	0.247
2.0	2.702	1.515	0.955	0.764	0.665	0.604	0.563	0.533	0.511	0.493
4.0	5.404	3.030	1.910	1.527	1.329	1.208	1.126	1.066	1.021	0.986
6.0	8.106	4.544	2.866	2.291	1.994	1.812	1.689	1.600	1.532	1.479
8.0	10.807	6.059	3.821	3.054	2.659	2.416	2.252	2.133	2.043	1.972
10.0	13.509	7.574	4.776	3.818	3.324	3.020	2.815	2.666	2.554	2.465

IEC CURVES

For European applications, the relay offers three standard curves defined in IEC 255-4 and British standard BS142. These are defined as IEC Curve A, IEC Curve B, and IEC Curve C. The formula for these curves is:

$$T = TDM \times \left[\frac{K}{\left(I / I_{pickup}\right)^{E} - 1} \right], \quad T_{RESET} = TDM \times \left[\frac{t_r}{1 - \left(I / I_{pickup}\right)^{2}} \right]$$

Where:

- T = operate time (in seconds)
- TDM = Multiplier setting
- I = input current
- I_{pickup} = Pickup Current setting
- K, E = constants
- t_r = characteristic constant
- T_{RESET} = reset time in seconds (assuming energy capacity is 100% and RESET is `Timed`)

IEC (BS) INVERSE TIME CURVE CONSTANTS

IEC (BS) CURVE SHAPE	K	E	t_r
IEC Curve A (BS142)	0.140	0.020	9.7
IEC Curve B (BS142)	13.500	1.000	43.2
IEC Curve C (BS142)	80.000	2.000	58.2
IEC Short Inverse	0.050	0.040	0.500

IEC CURVE TRIP TIMES (IN SECONDS)

TDM	CURRENT (I/I_{pickup})									
	1.5	2.0	3.0	4.0	5.0	6.0	7.0	8.0	9.0	10.0
IEC CURVE A										
0.05	0.860	0.501	0.315	0.249	0.214	0.192	0.176	0.165	0.156	0.149
0.10	1.719	1.003	0.630	0.498	0.428	0.384	0.353	0.330	0.312	0.297
0.20	3.439	2.006	1.260	0.996	0.856	0.767	0.706	0.659	0.623	0.594
0.40	6.878	4.012	2.521	1.992	1.712	1.535	1.411	1.319	1.247	1.188
0.60	10.317	6.017	3.781	2.988	2.568	2.302	2.117	1.978	1.870	1.782
0.80	13.755	8.023	5.042	3.984	3.424	3.070	2.822	2.637	2.493	2.376
1.00	17.194	10.029	6.302	4.980	4.280	3.837	3.528	3.297	3.116	2.971
IEC CURVE B										
0.05	1.350	0.675	0.338	0.225	0.169	0.135	0.113	0.096	0.084	0.075
0.10	2.700	1.350	0.675	0.450	0.338	0.270	0.225	0.193	0.169	0.150
0.20	5.400	2.700	1.350	0.900	0.675	0.540	0.450	0.386	0.338	0.300
0.40	10.800	5.400	2.700	1.800	1.350	1.080	0.900	0.771	0.675	0.600
0.60	16.200	8.100	4.050	2.700	2.025	1.620	1.350	1.157	1.013	0.900

TDM	CURRENT (I/I_{pickup})									
	1.5	2.0	3.0	4.0	5.0	6.0	7.0	8.0	9.0	10.0
0.80	21.600	10.800	5.400	3.600	2.700	2.160	1.800	1.543	1.350	1.200
1.00	27.000	13.500	6.750	4.500	3.375	2.700	2.250	1.929	1.688	1.500
IEC CURVE C										
0.05	3.200	1.333	0.500	0.267	0.167	0.114	0.083	0.063	0.050	0.040
0.10	6.400	2.667	1.000	0.533	0.333	0.229	0.167	0.127	0.100	0.081
0.20	12.800	5.333	2.000	1.067	0.667	0.457	0.333	0.254	0.200	0.162
0.40	25.600	10.667	4.000	2.133	1.333	0.914	0.667	0.508	0.400	0.323
0.60	38.400	16.000	6.000	3.200	2.000	1.371	1.000	0.762	0.600	0.485
0.80	51.200	21.333	8.000	4.267	2.667	1.829	1.333	1.016	0.800	0.646
1.00	64.000	26.667	10.000	5.333	3.333	2.286	1.667	1.270	1.000	0.808
IEC SHORT INVERSE										
0.05	0.153	0.089	0.056	0.044	0.038	0.034	0.031	0.029	0.027	0.026
0.10	0.306	0.178	0.111	0.088	0.075	0.067	0.062	0.058	0.054	0.052
0.20	0.612	0.356	0.223	0.175	0.150	0.135	0.124	0.115	0.109	0.104
0.40	1.223	0.711	0.445	0.351	0.301	0.269	0.247	0.231	0.218	0.207
0.60	1.835	1.067	0.668	0.526	0.451	0.404	0.371	0.346	0.327	0.311
0.80	2.446	1.423	0.890	0.702	0.602	0.538	0.494	0.461	0.435	0.415
1.00	3.058	1.778	1.113	0.877	0.752	0.673	0.618	0.576	0.544	0.518

IAC CURVES

The curves for the General Electric type IAC relay family are derived from the formula:

$$T = TDM \times \left[A + \frac{B}{(I/I_{pickup}) - C} + \frac{D}{((I/I_{pickup}) - C)^2} + \frac{E}{((I/I_{pickup}) - C)^3} \right], \quad T_{RESET} = TDM \times \left[\frac{t_r}{1 - (I/I_{pickup})^2} \right]$$

Where:

- T = operate time (in seconds)
- TDM = Multiplier setting
- I = input current
- I_{pickup} = Pickup Current setting
- A to E = constants
- t_r = characteristic constant
- T_{RESET} = reset time in seconds (assuming energy capacity is 100% and RESET is `Timed`)

GE TYPE IAC INVERSE TIME CURVE CONSTANTS

IAC CURVE SHAPE	A	B	C	D	E	t_r
IAC Extremely Inverse	0.0040	0.6379	0.6200	1.7872	0.2461	6.008
IAC Very Inverse	0.0900	0.7965	0.1000	-1.2885	7.9586	4.678
IAC Inverse	0.2078	0.8630	0.8000	-0.4180	0.1947	0.990

IAC CURVE SHAPE	A	B	C	D	E	t_r
IAC Short Inverse	0.0428	0.0609	0.6200	-0.0010	0.0221	0.222

IAC CURVE TRIP TIMES (IN SECONDS)

TDM	CURRENT (I/I_{pickup})									
	1.5	2.0	3.0	4.0	5.0	6.0	7.0	8.0	9.0	10.0
IAC EXTREMELY INVERSE										
0.5	1.699	0.749	0.303	0.178	0.123	0.093	0.074	0.062	0.053	0.046
1.0	3.398	1.498	0.606	0.356	0.246	0.186	0.149	0.124	0.106	0.093
2.0	6.796	2.997	1.212	0.711	0.491	0.372	0.298	0.248	0.212	0.185
4.0	13.591	5.993	2.423	1.422	0.983	0.744	0.595	0.495	0.424	0.370
6.0	20.387	8.990	3.635	2.133	1.474	1.115	0.893	0.743	0.636	0.556
8.0	27.183	11.987	4.846	2.844	1.966	1.487	1.191	0.991	0.848	0.741
10.0	33.979	14.983	6.058	3.555	2.457	1.859	1.488	1.239	1.060	0.926
IAC VERY INVERSE										
0.5	1.451	0.656	0.269	0.172	0.133	0.113	0.101	0.093	0.087	0.083
1.0	2.901	1.312	0.537	0.343	0.266	0.227	0.202	0.186	0.174	0.165
2.0	5.802	2.624	1.075	0.687	0.533	0.453	0.405	0.372	0.349	0.331
4.0	11.605	5.248	2.150	1.374	1.065	0.906	0.810	0.745	0.698	0.662
6.0	17.407	7.872	3.225	2.061	1.598	1.359	1.215	1.117	1.046	0.992
8.0	23.209	10.497	4.299	2.747	2.131	1.813	1.620	1.490	1.395	1.323
10.0	29.012	13.121	5.374	3.434	2.663	2.266	2.025	1.862	1.744	1.654
IAC INVERSE										
0.5	0.578	0.375	0.266	0.221	0.196	0.180	0.618	0.160	0.154	0.148
1.0	1.155	0.749	0.532	0.443	0.392	0.360	0.337	0.320	0.307	0.297
2.0	2.310	1.499	1.064	0.885	0.784	0.719	0.674	0.640	0.614	0.594
4.0	4.621	2.997	2.128	1.770	1.569	1.439	1.348	1.280	1.229	1.188
6.0	6.931	4.496	3.192	2.656	2.353	2.158	2.022	1.921	1.843	1.781
8.0	9.242	5.995	4.256	3.541	3.138	2.878	2.695	2.561	2.457	2.375
10.0	11.552	7.494	5.320	4.426	3.922	3.597	3.369	3.201	3.072	2.969
IAC SHORT INVERSE										
0.5	0.072	0.047	0.035	0.031	0.028	0.027	0.026	0.026	0.025	0.025
1.0	0.143	0.095	0.070	0.061	0.057	0.054	0.052	0.051	0.050	0.049
2.0	0.286	0.190	0.140	0.123	0.114	0.108	0.105	0.102	0.100	0.099
4.0	0.573	0.379	0.279	0.245	0.228	0.217	0.210	0.204	0.200	0.197
6.0	0.859	0.569	0.419	0.368	0.341	0.325	0.314	0.307	0.301	0.296
8.0	1.145	0.759	0.559	0.490	0.455	0.434	0.419	0.409	0.401	0.394
10.0	1.431	0.948	0.699	0.613	0.569	0.542	0.524	0.511	0.501	0.493

I2T CURVES

The curves for the I^2t are derived from the formula:

$$T = TDM \times \left[\frac{100}{\left(I / I_{pickup}\right)^{2}} \right], \quad T_{RESET} = TDM \times \left[\frac{100}{\left(I / I_{pickup}\right)^{-2}} \right]$$

Where:

- T = operate time (in seconds)
- TDM = Multiplier setting
- I = input current
- I_{pickup} = Pickup Current setting
- T_{RESET} = reset time in seconds (assuming energy capacity is 100% and RESET is `Timed`)

I2T CURVE TRIP TIMES (IN SECONDS)

TDM	CURRENT (I/I_{pickup})									
	1.5	2.0	3.0	4.0	5.0	6.0	7.0	8.0	9.0	10.0
0.05	2.22	1.25	0.55	0.31	0.20	0.14	0.10	0.08	0.06	0.05
0.10	4.44	2.50	1.11	0.63	0.40	0.28	0.20	0.16	0.12	0.10
1.00	44.44	25.00	11.11	6.25	4.00	2.78	2.04	1.56	1.23	1.00
10.00	444.44	250.00	111.11	62.50	40.00	27.78	20.41	15.63	123.5	10.00
100.00	4444.44	2500.00	1111.1	625.00	400.00	277.78	204.08	156.25	123.46	100.00
600.00	26666.7	15000.0	6666.7	3750.0	2400.0	1666.7	1224.5	937.50	740.74	600.00

I4T CURVES

The curves for the I^4t are derived from the formula:

$$T = TDM \times \left[\frac{100}{\left(I / I_{pickup}\right)^{4}} \right], \quad T_{RESET} = TDM \times \left[\frac{100}{\left(I / I_{pickup}\right)^{-4}} \right]$$

Where:

- T = operate time (in seconds)
- TDM = Multiplier setting
- I = input current
- I_{pickup} = Pickup Current setting
- T_{RESET} = reset time in seconds (assuming energy capacity is 100% and RESET is `Timed`)

I4T CURVE TRIP TIMES (IN SECONDS)

TDM	CURRENT (I/I_{pickup})									
	1.5	2.0	3.0	4.0	5.0	6.0	7.0	8.0	9.0	10.0
0.05	0.9876	0.3125	0.0617	0.0198	0.0008	0.0038	0.0021	0.0012	0.0007	0.0005
0.10	1.9753	0.6250	0.1235	0.0391	0.0160	0.0077	0.0042	0.0024	0.0015	0.0010
1.00	19.753	6.250	1.235	0.391	0.160	0.077	0.042	0.024	0.015	0.010
10.00	197.531	62.500	12.346	3.906	1.600	0.772	0.416	0.244	0.152	0.100

TDM	CURRENT (I/I_{pickup})									
	1.5	2.0	3.0	4.0	5.0	6.0	7.0	8.0	9.0	10.0
100.00	1975.31	625.00	123.46	39.06	16.00	7.72	4.16	2.44	1.52	1.00
600.00	11851.9	3750.0	740.7	234.4	96.00	46.3	25.0	14.65	9.14	6.00

DEFINITE TIME CURVES

The Definite Time curve shape operates as soon as the pickup level is exceeded for a specified period of time. The base Definite Time curve delay is in seconds. The curve multiplier of 0.05 to 600 makes this delay adjustable from 50 to 600000 milliseconds.

$$T = \text{TDM in seconds, when } I > I_{pickup}$$

$$T_{reset} = \text{TDM in seconds}$$

Where:

- T = operate time (in seconds)
- TDM = Multiplier setting
- I = input current
- I_{pickup} = Pickup Current setting
- T_{RESET} = reset time in seconds (assuming energy capacity is 100% and RESET is `Timed`)

8.4.2 PHASE TIME OVERCURRENT PROTECTION (51P)

You can configure the TOC element as follows:

- Apply any of the IEEE, ANSI, IEC, and IAC standard inverse curves
- Apply any of the four FlexCurves
- Set it to definite time.

The selection of Time Dial Multiplier and minimum Pickup helps to fine tune the protection for accurate upstream/downstream coordination and during certain conditions, such as manual closing and maintenance.

The settings of this function are applied to each of the three phases to produce *Pickup* and *Trip* flags per phase. There is no intentional dead band when the current is above the Pickup level. However the Pickup accuracy is guaranteed within the current input accuracy of 1.5% above the set pickup value. The time overcurrent (TOC) Pickup flag is asserted, when the current on any phase is above the pickup value. The TOC Trip flag is asserted if the element stays picked up for the time defined by the selected inverse curve and the magnitude of the current. The element drops from Pickup without operating if the measured current drops below 97 to 98% of the Pickup value before the time for operation is reached. When Definite Time is selected, the time for TOC operation is defined only by the ***TDM*** setting. When in Definite Time mode, ***TDM*** sets the time to operate in seconds.

Path: ***Setpoints*** > ***Protection*** > ***Group 1(6)*** > ***Current*** > ***Phase TOC*** > ***Phase TOC 1(X)***

FUNCTION

Range: Disabled, Trip, Alarm, Latched Alarm, Configurable

Default: Disabled

SIGNAL INPUT

Range: Dependent upon the order code

Default: CT Bank 1-J1

This setting provides the selection for the current input bank. The default bank names can be changed in: ***Setpoints*** > ***System*** > ***Current Sensing*** > ***[Name]*** > ***CT Bank Name***.

INPUT

Range: Phasor, RMS

Default: Phasor

MODE

Range: Three Phase, PhA, PhB, PhC

Default: Three Phase

This setpoint selection defines the individual phase or three-phase TOC element operation. When Three Phase is selected, all other TOC setpoints (Pickup, Curve etc.) apply to all three phases. When an individual phase is selected, all other TOC setpoints apply only to the selected phase, and elements operate in the per- phase mode. Individual per-phase TOC element instances can be set for each individual phase to produce pickup and trip flags per phase. A total of 6 instances of the TOC element is supported in the 850R.

PICKUP

Range: 0.020 to 30.000 x CT in steps of 0.001 x CT

Default: 1.000 x CT

CURVE

Range: IEEE Extremely / Very / Moderately Inverse; ANSI Extremely / Very / Normally /Moderately Inverse; Definite time IEC A / B / C and Short Inverse; IAC Extremely / Very /Inverse / Short Inverse; FlexCurve A / B / C / D, I2t, I4t

Default: IEEE Moderately Inverse

TDM

Range: 0.05 to 600.00 in steps of 0.01

Default: 1.00

The setting provides a selection for Time Dial Multiplier which modifies the operating times per the selected inverse curve. For example, if an IEEE Extremely Inverse curve is selected with TDM = 2, and the fault current is 5 times bigger than the PKP level, the operation of the element will not occur before 2.59 s have elapsed after Pickup.

RESET

Range: Instantaneous, Timed

Default: Instantaneous

Selection of an Instantaneous or a Timed reset time is provided using this setting. If Instantaneous reset is selected, the Phase TOC element will reset instantaneously providing the current drops below 97-98% of the Phase TOC PKP level. If Timed reset is selected, the time to reset is calculated based on the reset equation for the selected inverse curve.

DIRECTION

Range: Disabled, Forward (Ph Dir OCx FWD), Reverse (Ph Dir OCx REV)

Default: Disabled

VOLTAGE RESTRAINT

Range: Disabled, Enabled

Default: Disabled

This setting enables or disables the Voltage Restraint function for the TOC element. When enabled, this feature lowers the Pickup value of each individual Phase Time Overcurrent element in a fixed relationship with its corresponding phase input voltage.

If cold load pickup or autoreclosing features are controlling the protection, the Phase TOC Voltage Restraint does not work, even when enabled.

Voltage restraint is used to lower the current pickup level for TOC function in linear proportion as shown in figure below. For example, if phase TOC ***PICKUP*** setting is set to 1.000 XCT, in case of system faults cause generator terminal voltage drops to 0.4 pu (ratio of Phase-Phase Voltage/ VT Nominal Phase-phase voltage), the new pickup with voltage restraint would be 1.000*0.4=0.400 xCT. During the fault condition when the voltage drops, the overcurrent relay pickup also drops linearly and it should be verified that for the limiting case the new voltage restraint relay pickup should be lower than (around 50% of) the fault current. Refer IEEE C37.102-2006, Annex-A for more details.

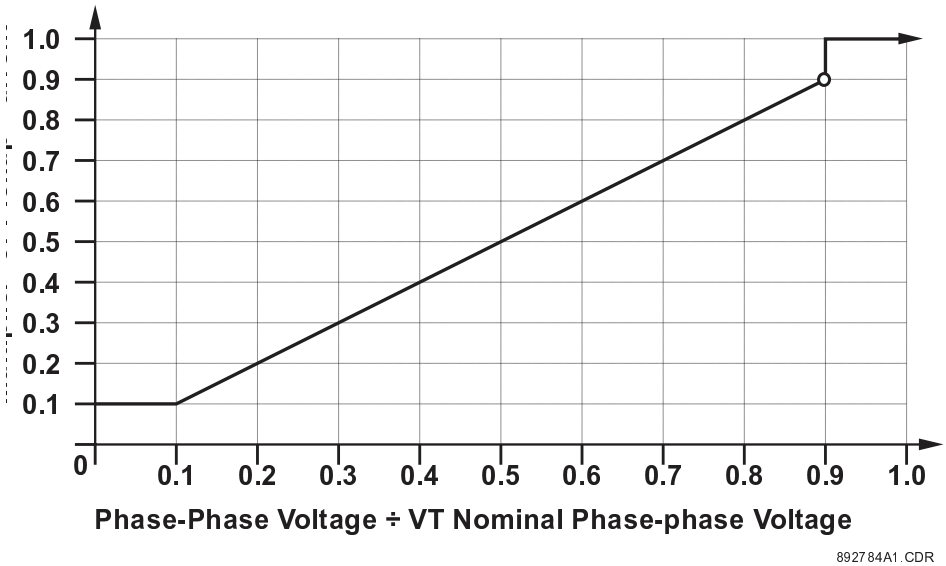

Figure 122: Voltage restraint characteristic

VT INPUT

Range: Dependent upon the order code

Default: Ph VT Bank 1-J2

This setting provides the selection for the voltage input bank. The default bank names can be changed in: ***Setpoints*** > ***System*** > ***Current Sensing*** > ***[Name]*** > ***VT Bank Name***.

VOLTAGE LOWER LIMIT

Range: 0.1 to 0.6 pu in steps of 0.1 pu

Default: 0.1 pu

This setpoint is effective only when the ***VOLTAGE RESTRAINT*** setpoint is set to Enabled. The ***VOLTAGE LOWER LIMIT*** setpoint enhances coordination of this system back function with system protections, and prevents very rapid generator tripping prior to primary system protection operation. The typical value for this setting is between 0.1 pu to 0.3 pu, and it is calculated such that under extreme emergency conditions (the lowest expected system voltage), the function will coordinate with system protection to prevent misoperation, but still provide backup in case system faults are not cleared.

BLOCK

Range: Off, Any FlexLogic operand

Default: Off

OUTPUT RELAY X

Range: Operate, Do Not Operate

Default: Do Not Operate

EVENTS

Range: Enabled, Disabled

Default: Enabled

TARGETS

Range: Self-reset, Latched, Disabled

Default: Self-reset

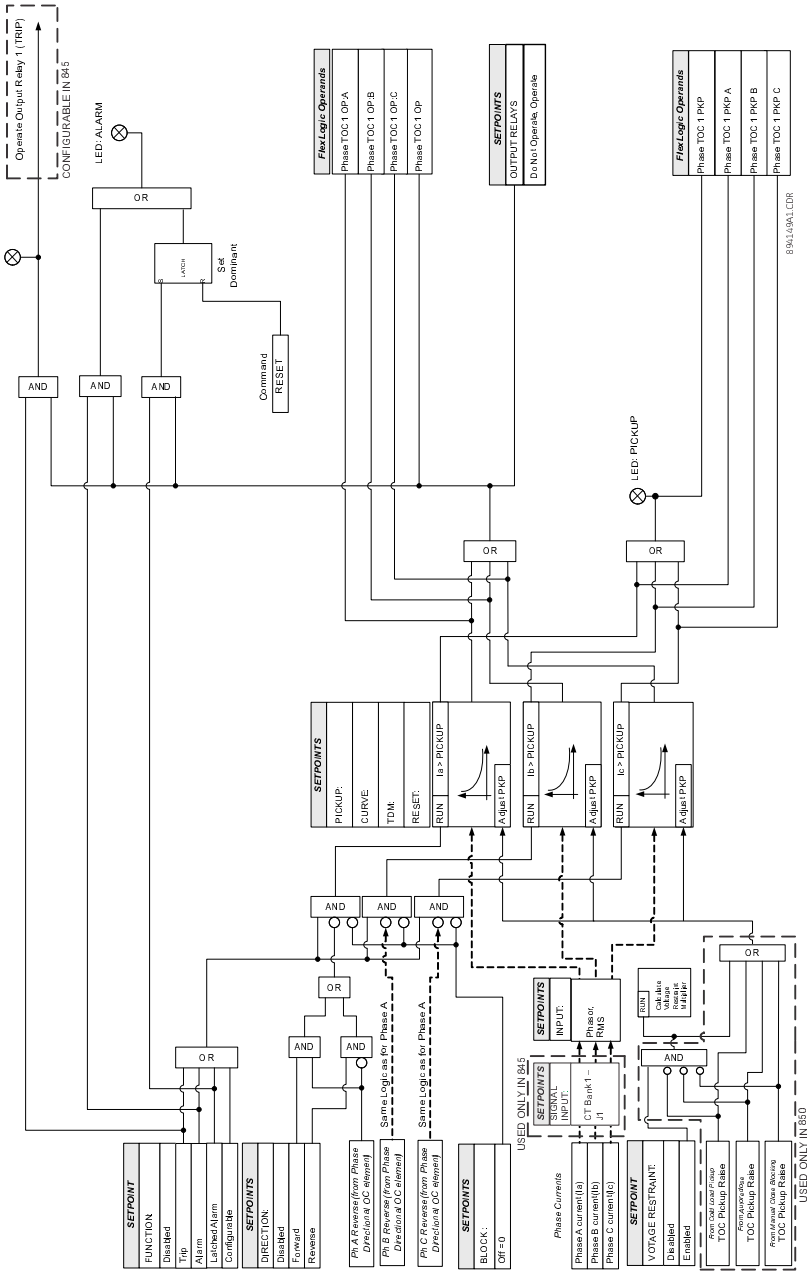

Figure 123: Phase Time Overcurrent Protection logic diagram

8.4.3 PHASE INSTANTANEOUS OVERCURRENT PROTECTION (50P)

The PIOC protection consists of three identical instantaneous overcurrent elements, one for each phase. All three have identical characteristics. The settings of this function are applied to each of the three phases to produce *Pickup* and *Trip* flags per phase. There is no intentional dead band when the current is above the Pickup level. However the Pickup accuracy is guaranteed within the current input accuracy of 3% above the set pickup value. The IOC Pickup flag is asserted, when the current of any phase is above the pickup value. The IOC Operate flag is asserted if the element stays picked up for the time defined in ***PH IOC PKP DELAY***. The element drops from Pickup without operating if the measured current drops below 97-98% of the Pickup value before the time for operation is reached.

Path: ***Setpoints*** > ***Protection*** > ***Group1(6)*** > ***Current*** > ***Phase IOC 1(X)***

FUNCTION

Range: Disabled, Trip, Alarm, Latched Alarm, Configurable

Note: Relays with firmware version 4 and later have a `Latched Trip` *option*

Default: Disabled

SIGNAL INPUT

Range: Dependent upon the order code

Default: CT Bank 1-J1 (dependent on order code)

This setting provides the selection for the current input bank. The default bank names can be changed in: ***Setpoints*** > ***System*** > ***Current Sensing*** > ***[Name]*** > ***CT Bank Name***.

INPUT

Range: Phasor, RMS

Default: Phasor

PICKUP

Range (3.xx): 0.020 to 30.000 x CT in steps of 0.001 x CT

Range (4.10): 0.010 to 30.000 x CT in steps of 0.001 x CT

Default: 1.000 x CT

DIRECTION

Range: Disabled, Forward (Ph Dir OCx FWD), Reverse (Ph Dir OCx REV)

Default: Disabled

PICKUP DELAY

Range (3.xx): 0.000 to 6000.000 s in steps of 0.001 s

Range (4.10): 0.000 to 28800.000 s in steps of 0.001 s

Default: 0.000 s

DROPOUT DELAY

Range (3.xx): 0.000 to 6000.000 s in steps of 0.001 s

Range (4.10): 0.000 to 28800.000 s in steps of 0.001 s

Default: 0.000 s

BLOCK

Range: Off, Any FlexLogic operand

Default: Off

OUTPUT RELAY X

Range: Operate, Do Not Operate

Default: Do Not Operate

EVENTS

Range: Enabled, Disabled

Default: Enabled

TARGETS

Range: Self-reset, Latched, Disabled

Default: Self-reset

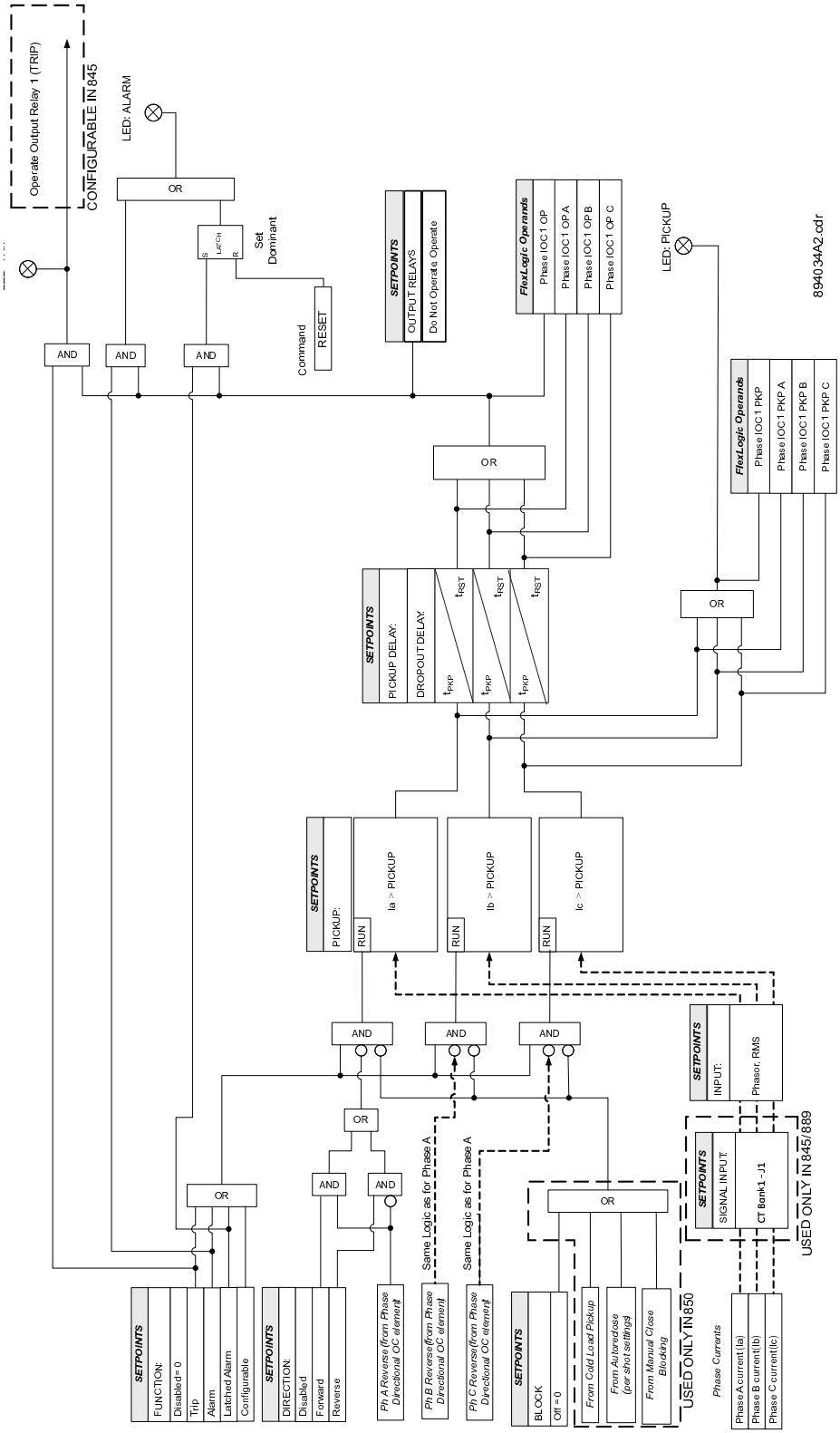

Figure 124: Phase Instantaneous Overcurrent logic diagram

8.4.4 PHASE DIRECTIONAL OVERCURRENT PROTECTION (67P)

The Phase Directional Overcurrent protection elements (one for each of phases A, B, and C) determine the phase current flow direction for steady state and fault conditions and can be used to control the operation of the phase overcurrent elements by sending directional bits to inputs of these elements.

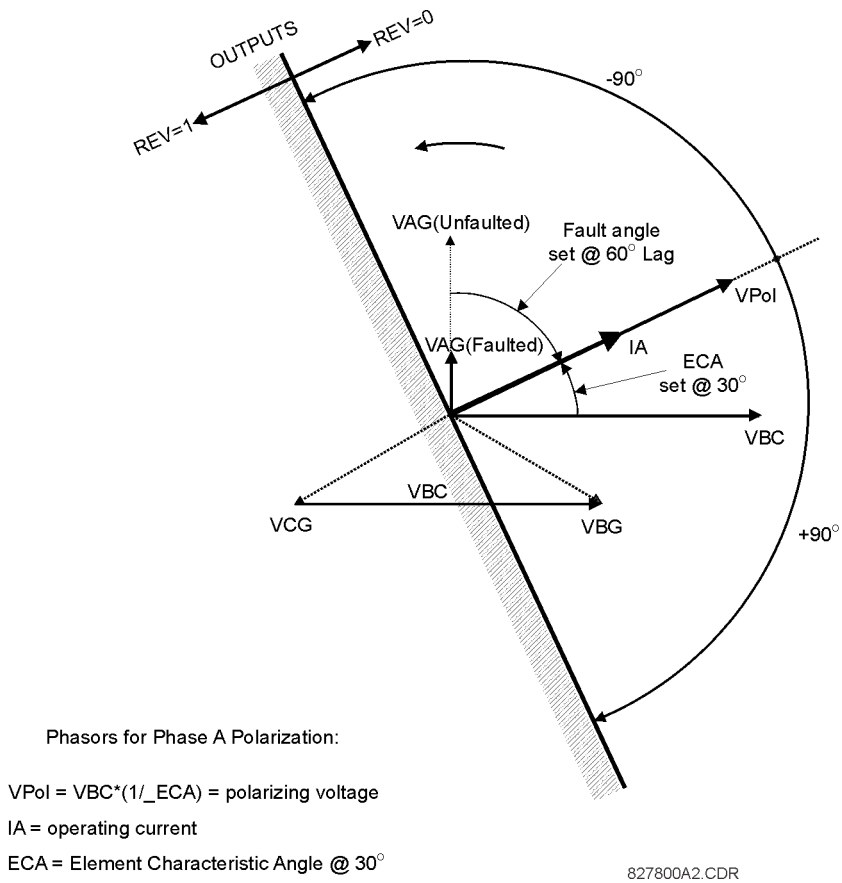

Figure 125: Phasors for phase A polarization

The element is intended to send a directional signal to an overcurrent element to prevent an operation when current is flowing in a particular direction. The direction of current flow is determined by measuring the phase angle between the current from the phase CTs and the line-line voltage from the VTs, based on the 90° or quadrature connection. To increase security for three phase faults very close to the VTs used to measure the polarizing voltage, a voltage memory feature is incorporated. This feature remembers the measurement of the polarizing voltage 3 cycles back and uses it to determine direction. The voltage memory remains valid for one second after the voltage has collapsed.

The main component of the phase directional element is the phase angle comparator with two inputs: the operating signal (phase current) and the polarizing signal (the line voltage, shifted in the leading direction by the characteristic angle, ECA).

The following table shows the operating and polarizing signals used for phase directional control:

PHASE	OPERATING SIGNAL	POLARIZING SIGNAL (Vpol)	
		ABC PHASE SEQUENCE	ACB PHASE SEQUENCE
A	Angle of Ia	Angle of Vbc × (1∠ECA)	Angle of Vcb × (1∠ECA)
B	Angle of Ib	Angle of Vca × (1∠ECA)	Angle of Vac × (1∠ECA)
C	Angle of Ic	Angle of Vab × (1∠ECA)	Angle of Vba × (1∠ECA)

For 850D dual feeder applications, when the signal input is from CT Bank 1 – J1, VT Bank 1-J2 is used as the polarizing voltage source. Similarly, when the signal input is from CT Bank 2 – K1, VT Bank 2 – K2 is used as the polarizing voltage source.

Path: ***Setpoints*** > ***Protection*** > ***Group1(6)*** > ***Current*** > ***Phase Dir OC 1(X)***

FUNCTION

Range: Disabled, Enabled

Default: Disabled

SIGNAL INPUT

Range: dependent upon the order code

Default: CT Bank 1-J1

This setting provides the selection for the current input bank. The default bank names can be changed in: ***Setpoints*** > ***System*** > ***Current Sensing*** > ***[Name]*** > ***CT Bank Name***.

ECA

Range: 0° to 359° in steps of 1°

Default: 30°

The setting is used to select the element characteristic angle, i.e. the angle by which the polarizing voltage is shifted in the leading direction to achieve dependable operation.

POLARIZING V THRESHOLD

Range (3.xx): 0.050 to 3.000 x VT in steps of 0.001 x VT

Range (4.10): 0.015 to 3.000 x VT in steps of 0.001 x VT

Default: 0.700 x VT

The setting is used to establish the minimum level of voltage for which the phase angle measurement is reliable. The setting is based on VT accuracy.

REV WHEN V MEM EXP

Range: No, Yes

Default: No

The setting is used to select the required operation upon expiration of voltage memory. When set to “Yes” the directional element output value is forced to Reverse when voltage memory expires; when set to “No” the directional element is Forward when voltage memory expires.

BLOCK

Range: Off, Any FlexLogic operand

Default: Off

EVENTS

Range: Enabled, Disabled

Default: Enabled

TARGETS

Range: Self-reset, Latched, Disabled

Default: Self-reset

Note:
The Phase Directional element responds to the forward load current. In the case of a following reverse fault, the element needs some time – in the order of 8 ms – to change the directional signal. Some protection elements such as Instantaneous Overcurrent may respond to reverse faults before the directional signal has changed. A coordination time of at least 10 ms must therefore be added to all the instantaneous protection elements under the supervision of the Phase Directional element. If current reversal is a concern, a longer delay – in the order of 20 ms – is needed.

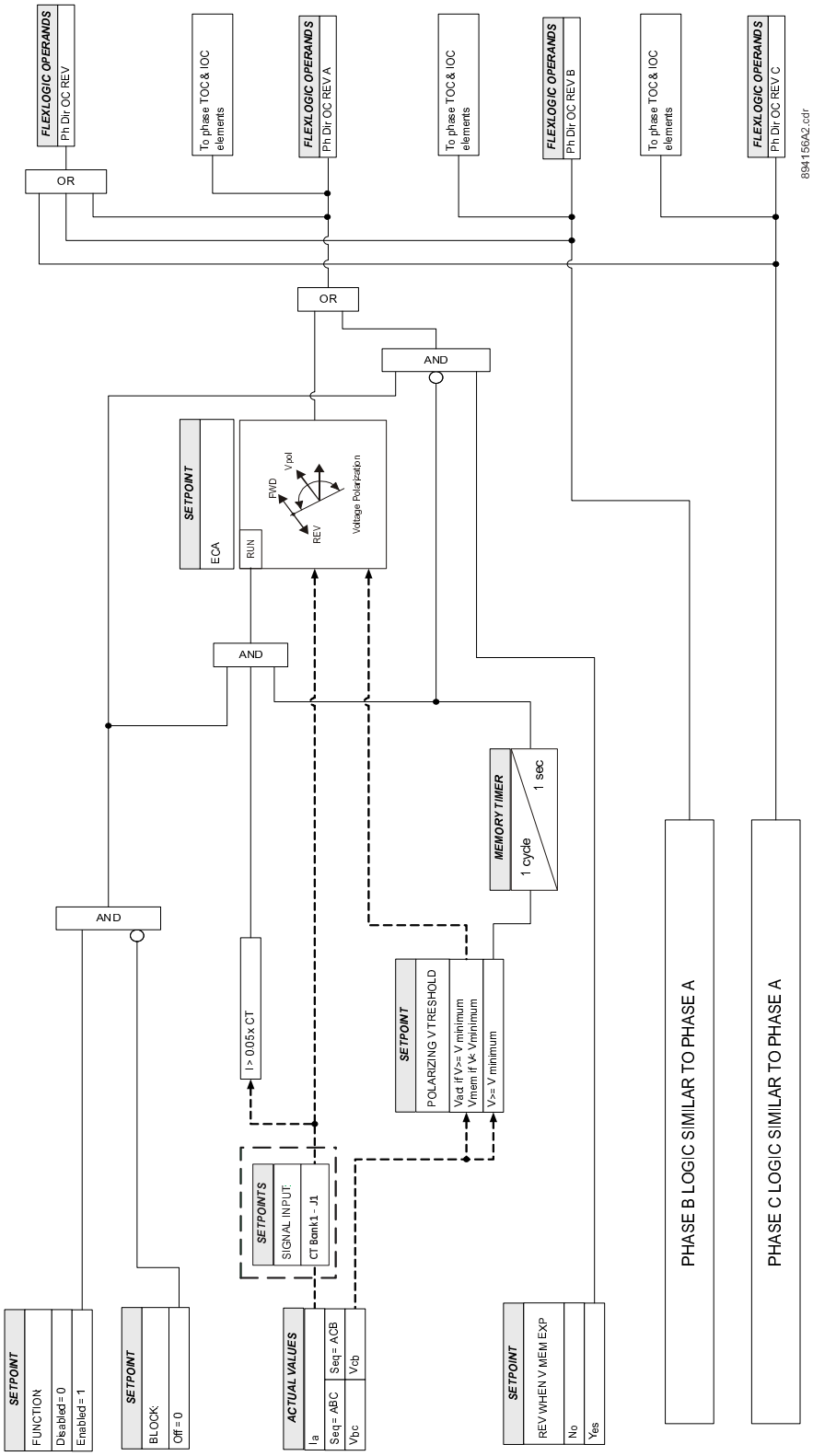

Figure 126: Phase Directional Overcurrent Protection logic diagram

8.4.5 NEUTRAL TIME OVERCURRENT PROTECTION (51N)

The relay computes the neutral current (In) using the following formula:

$$|In|=|Ia+Ib+Ic|$$

The settings of this function are applied to the neutral current to produce *Trip* or *Pickup* flags. The Neutral TOC Pickup flag is asserted when the neutral current is above the pickup value. The Neutral TOC Trip flag is asserted if the element stays picked up for the time defined by the selected inverse curve and the magnitude of the current. The element drops from Pickup without operation if the measured current drops below 97 to 98% of the Pickup value before the time for operation is reached. When Definite Time is selected, the time for Neutral TOC operation is defined only by the ***TDM*** setting.

Path: ***Setpoints*** > ***Protection*** > ***Group 1(6)*** > ***Current*** > ***Neutral TOC 1(X)***

FUNCTION

Range: Disabled, Trip, Alarm, Latched Alarm, Configurable

Default: Disabled

SIGNAL INPUT

Range: dependent upon the order code

Default: CT Bank 1-J1

This setting provides the selection for the current input bank. The default bank names can be changed in: Setpoints > System > Current Sensing > [Name] > CT Bank Name.

INPUT

Range: Phasor, RMS

Default: Phasor

This selection defines the method of processing of the current signal. It could be Root Mean Square (RMS) or Fundamental Phasor Magnitude.

PICKUP

Range: 0.050 to 30.000 x CT in steps of 0.001 x CT

Default: 1.000 x CT

CURVE

Range: IEEE Extremely/Very/Moderately Inverse ANSI Extremely/Very/Normally/Moderately Inverse Definite time IEC A/B/C and Short Inverse IAC Extremely/Very/Inverse/Short Inverse FlexCurve A/B/C/D, I^2t, I^4t

Default: IEEE Mod Inverse

This setting sets the shape of the selected over-current inverse curve. If none of the standard curve shapes is appropriate, a FlexCurve can be created. Refer to the User curve and the FlexCurve setup for more details on their configurations and usage.

TDM

Range: 0.05 to 600.00 in steps of 0.01

Default: 1.00

This setting provides selection of the Time Dial Multiplier by which the times from the inverse curve are modified. For example if an ANSI Extremely Inverse curve is selected with TDM = 2, and the fault current is 5 times bigger than the PKP level, the operation of the element will not occur until 2.59s of time has elapsed from pickup.

RESET

Range: Instantaneous, Timed

Default: Instantaneous

The selection of an Instantaneous or a Timed reset time is provided for this setting. If the Instantaneous reset is selected, the neutral TOC element will reset instantaneously providing the current drops below 97-98% of the Neutral TOC PKP level, before the time for operation is reached.

DIRECTION

Range: Disabled, Forward (Ntrl Dir OCx FWD), Reverse (Ntrl Dir OCx REV)

Default: Disabled

BLOCK

Range: Off, Any FlexLogic operand

Default: Off

OUTPUT RELAY X

Range: Operate, Do Not Operate

Default: Do Not Operate

EVENTS

Range: Enabled, Disabled

Default: Enabled

TARGETS

Range: Self-reset, Latched, Disabled

Default: Self-reset

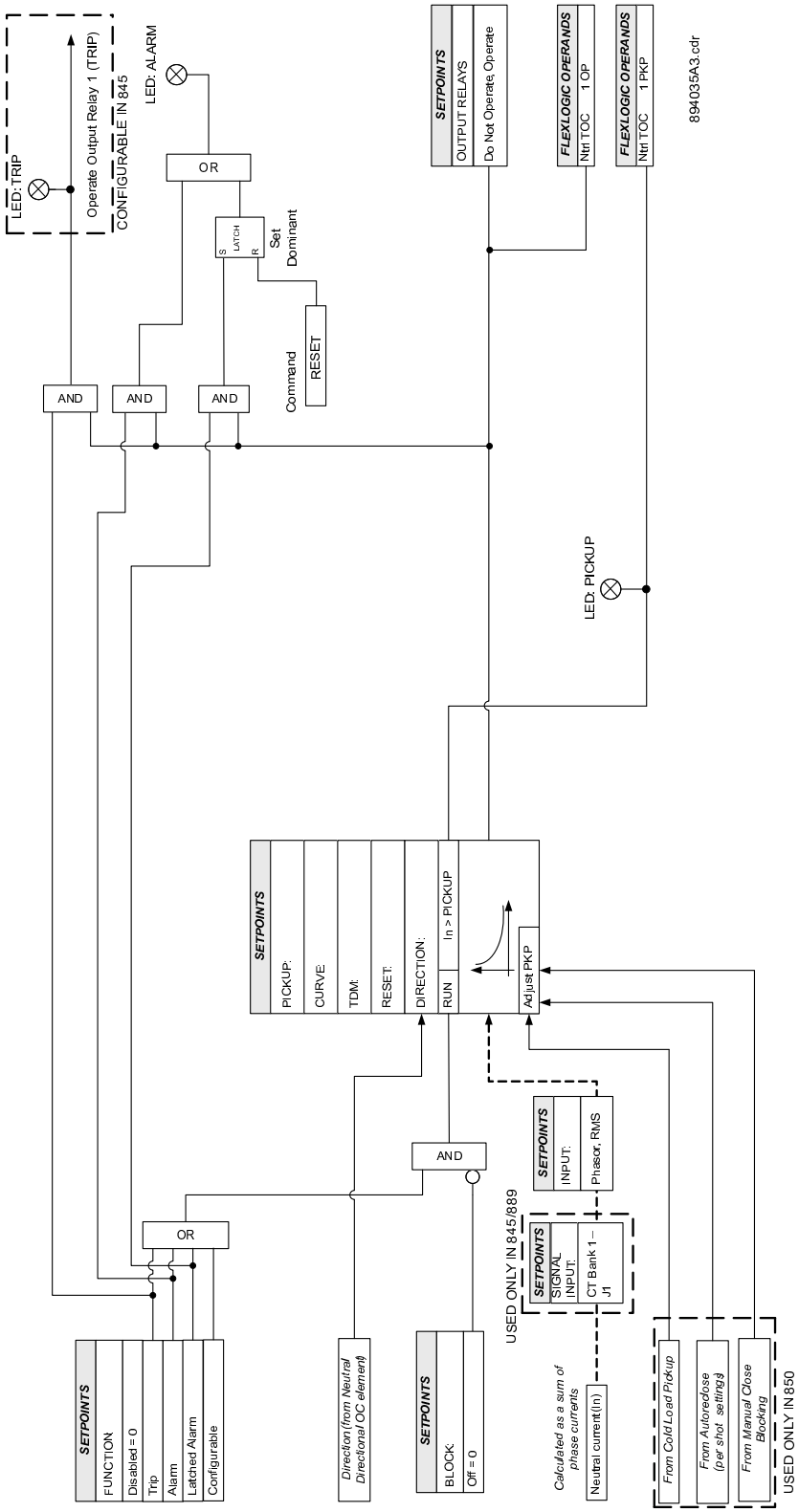

Figure 127: Neutral Time Overcurrent Protection logic diagram

8.4.6 NEUTRAL INSTANTANEOUS OVERCURRENT PROTECTION (50N)

The Neutral Instantaneous Overcurrent protection element computes the neutral current (In) using the following formula:

$$|In| = |Ia + Ib + Ic|$$

The element responds to the magnitude of a neutral current fundamental frequency phasor calculated from the phase currents. A positive-sequence restraint is applied for better performance. A small portion (6.25%) of the positive-sequence current magnitude is subtracted from the zero-sequence current magnitude when forming the operating quantity of the element as follows:

$$Iop = 3 * (|I_0| - K * |I_1|) \text{ where } K = 1/16 \text{ and } |I_0| = 1/3 * |In|$$

The positive-sequence restraint allows for more sensitive settings by counterbalancing spurious zero-sequence currents resulting from:

- system unbalances under heavy load conditions
- current transformer (CT) transformation errors of during double-line and three-phase faults
- switch-off transients during double-line and three-phase faults

The positive-sequence restraint must be considered when testing for Pickup accuracy and response time (multiple of Pickup). The operating quantity depends on how test currents are injected into the relay (single-phase injection: Iop = 0.9375 * I_injected three-phase pure zero sequence injection: Iop = 3 * I_injected).

The settings of this function are applied to the neutral current to produce *Pickup* and *Trip* flags. The Neutral IOC Pickup flag is asserted, when the neutral current is above the pickup value. The Neutral IOC Operate flag is asserted if the element stays picked up for the time defined by the Neutral IOC ***PICKUP DELAY*** setting. If the Pickup time delay is set to 0.000 seconds, the Pickup and Operate flags are asserted at the same time. The element drops from Pickup without operation if the neutral current drops below 97 to 98% of the Pickup value.

Path: ***Setpoints*** > ***Protection*** > ***Group 1(6)*** > ***Current*** > ***Neutral IOC 1(X)***

FUNCTION

Range: Disabled, Trip, Alarm, Latched Alarm, Configurable

Note: Relays with firmware version 4 and later have a `Latched Trip` *option*

Default: Disabled

SIGNAL INPUT

Range: dependent upon the order code

Default: CT Bank 1-J1

This setting provides the selection for the current input bank. The default bank names can be changed in: ***Setpoints*** > ***System*** > ***Current Sensing*** > ***[Name]*** > ***CT Bank Name***.

PICKUP

Range (FW 3.xx): 0.050 to 30.000 x CT in steps of 0.001 x CT

Range (FW 4.10): 0.010 to 30.000 x CT in steps of 0.001 x CT

Default (FW 3.xx): 1.00 x CT

Default (FW 4.10): 0.20 x CT

DIRECTION

Range: Disabled, Forward (Ntrl Dir OCx FWD), Reverse (Ntrl Dir OCx REV)

Default: Disabled

PICKUP DELAY

Range: 0.000 to 6000.000 s in steps of 0.001 s

Default: 0.000 s

DROPOUT DELAY

Range: 0.000 to 6000.000 s in steps of 0.001 s

Default: 0.000 s

BLOCK

Range: Off, Any FlexLogic operand

Default: Off

OUTPUT RELAY X

Range: Operate, Do Not Operate

Default: Do Not Operate

EVENTS

Range: Enabled, Disabled

Default: Enabled

TARGETS

Range: Self-reset, Latched, Disabled

Default: Self-reset

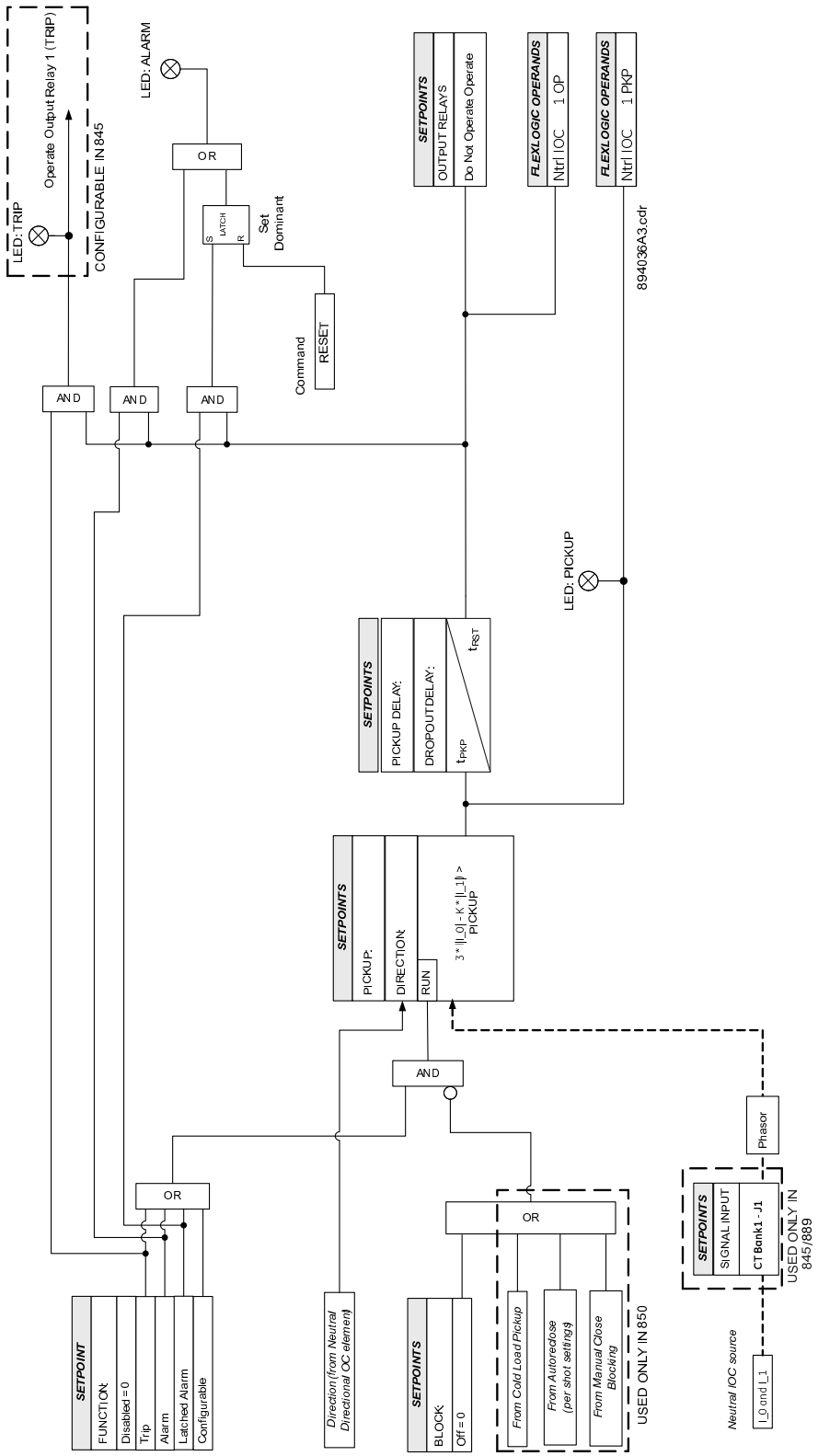

Figure 128: Neutral Instantaneous Overcurrent Protection logic diagram

8.4.7 NEUTRAL DIRECTIONAL OVERCURRENT PROTECTION (67N)

The Neutral Directional Overcurrent protection element provides both forward and reverse fault direction indications shown by the operands Ntrl Dir OC FWD and Ntrl Dir OC REV, respectively. The output operands are asserted if the

magnitude of the operating current is above a Pickup level (overcurrent unit) and the fault direction is seen as forward or reverse, respectively (directional unit).

The *overcurrent unit* responds to the magnitude of a fundamental frequency phasor of the neutral current calculated from the phase currents. There are separate Pickup settings for the forward-looking and reverse-looking functions. The element applies a positive-sequence restraint for better performance; a small user-programmable portion of the positive-sequence current magnitude is subtracted from the zero sequence current magnitude when forming the operating quantity.

$$Iop = 3 * (|I_0| - K * |I_1|)$$

The positive-sequence restraint allows for more sensitive settings by counterbalancing spurious zero-sequence currents resulting from:

- system unbalances under heavy load conditions
- current transformer (CT) transformation errors of during double-line and three-phase faults
- switch-off transients during double-line and three-phase faults.

The positive-sequence restraint must be considered when testing for Pickup accuracy and response time (multiple of Pickup). The operating quantity depends on the way the test currents are injected into the relay (single-phase injection: $I_{op} = (1 – K) \times I_{injected}$; three-phase pure zero-sequence injection: $I_{op} = 3 \times I_{injected}$).

The positive-sequence restraint is removed for low currents. If the positive-sequence current is below 0.8 x CT, the restraint is removed by changing the constant K to zero. This facilitates better response to high-resistance faults when the unbalance is very small and there is no danger of excessive CT errors as the current is low.

The *directional unit* uses the zero-sequence current (I_0) for fault direction discrimination and may be configured to use either zero-sequence voltage, ground current, or both for polarizing. The following table defines the neutral directional overcurrent element.

Directional unit				Overcurrent unit
Polarizing mode	**Direction**	**Compared phasors**		
Voltage	Forward	-V_0	1_0 x 1∠ECA	Iop = 3 x {|I_0| - K x | I_1|} If |I_1| > 0.8 x CT Iop = 3 x {|I_0|} if |I_1| ≤0.8 x CT
	Reverse	-V_0	-1_0 x 1∠ECA	
Current	Forward	Ig	I_0	
	Reverse	Ig	-I_0	
Dual	Forward	-V_0 or	I_0 x 1∠ECA or	
		Ig	I_0	
	Reverse	-V_0 or	-I_0 x 1∠ECA or	
		Ig	-I_0	

Where:

- V_0 = 1/3 * (Vag + Vbg + Vcg) = zero sequence voltage
- I_0 = 1/3 * In = 1/3 * (Ia + Ib + Ic) = zero sequence current
- ECA = element characteristic angle
- In = neutral current

When ***POLARIZING VOLTAGE*** is set to `Measured VX`, one-third of this voltage is used in place of V0.

The following figure explains the use of the voltage polarized directional unit of the element by showing the voltage-polarized phase angle comparator characteristics for a phase A to ground fault, with:

- ECA = 90° (element characteristic angle = centerline of operating characteristic)
- FWD LA = 80° (forward limit angle = the ± angular limit with the ECA for operation
- REV LA = 80° (reverse limit angle = the ± angular limit with the ECA for operation).

The element incorporates a current reversal logic: if the reverse direction is indicated for at least 1.25 of a power system cycle, the prospective forward indication will be delayed by 1.5 of a power system cycle. The element is

designed to emulate an electromechanical directional device. Larger operating and polarizing signals will result in faster directional discrimination bringing more security to element operation.

The forward-looking function is designed to be more secure as compared to the reverse-looking function, and should therefore be used for the tripping direction. The reverse-looking function is designed to be faster as compared to the forward-looking function and should be used for the blocking direction. This allows better protection coordination.

The above bias should be taken into account when using the Neutral Directional Overcurrent element to directionalize other protection elements.

> *Note:*
> *For relays ordered without voltage inputs, the polarizing signal for the Neutral Directional OC element is the ground current (Ig) from the bank selected as Signal Input in the element's menu. In this case the setpoints* ***POLARIZING MODE****, and* ***POLARIZING VOLTAGE*** *are not displayed.*

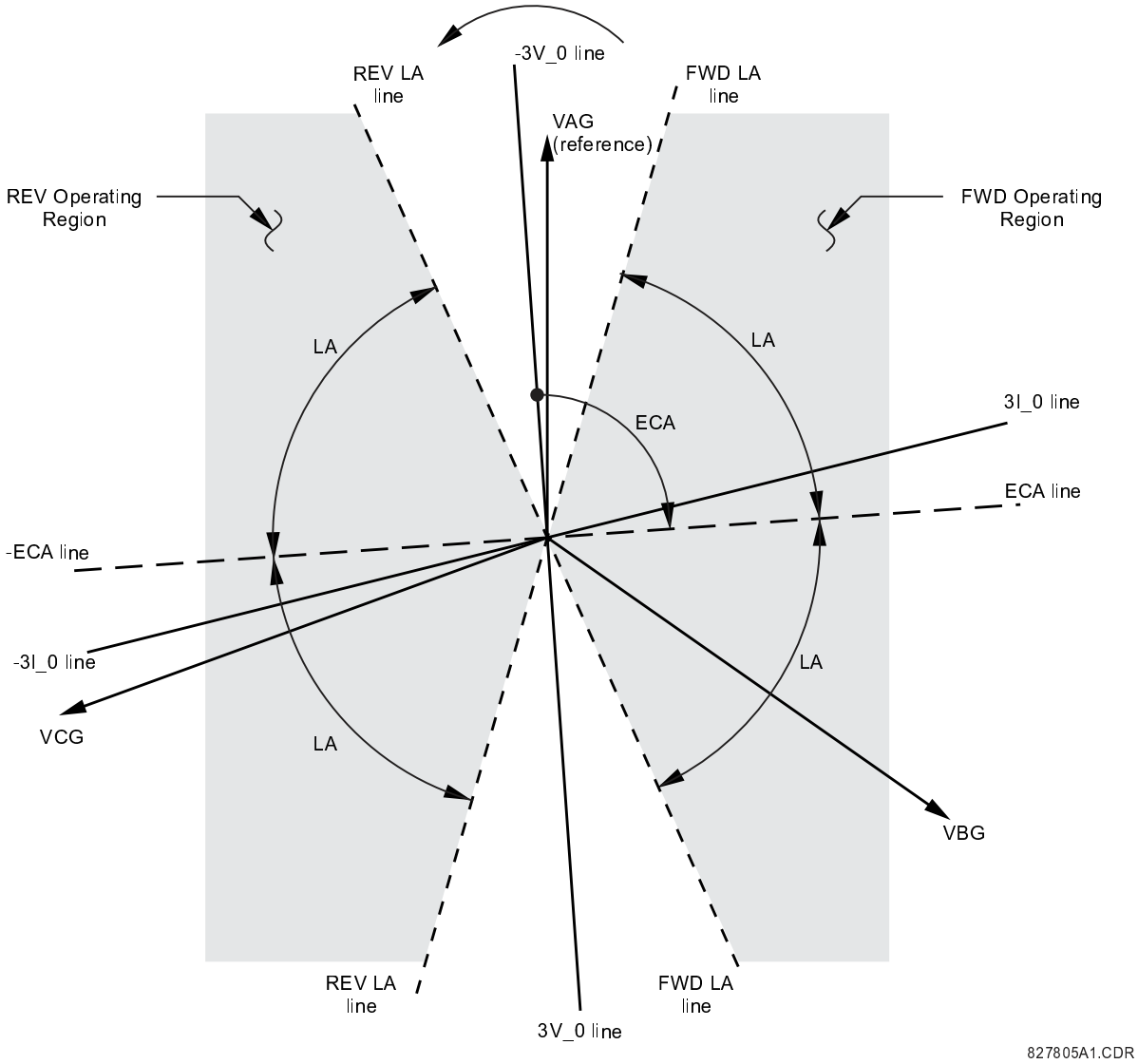

Figure 129: Neutral Directional Voltage-polarized Characteristics

> *Note:*
> *For 850 Dual Feeder Applications: For Signal Input of CT Bank 1 – J1 >> VT Bank 1 -J2 is considered as Polarizing voltage source. And, For CT Bank 2 – K1 >> VT Bank 2 – K2 is considered as Polarizing Voltage Source*

Path: ***Setpoints*** > ***Protection*** > ***Group 1(6)*** > ***Current*** > ***Neutral Directional OC 1(X)***

FUNCTION

Range: Disabled, Enabled

Default: Disabled

SIGNAL INPUT

Range: dependent upon the order code

Default: CT Bank 1-J1

This setting provides selection of the current input bank. The default bank names can be changed in ***Setpoints*** > ***System*** > ***Current Sensing*** > ***[Name]*** > ***CT Bank Name***.

POLARIZING MODE

Range: Voltage, Current, Dual

Default: Voltage

This setting selects the polarizing mode for the directional unit.

If `Voltage` polarizing mode is selected, the element uses the zero-sequence voltage angle for polarization. Select either the zero-sequence voltage V0, calculated from the phase voltages, or the zero-sequence voltage supplied externally as the auxiliary voltage V_X. The calculated V0 can be used as polarizing voltage only if the voltage transformers are connected in Wye. The auxiliary voltage can be used as the polarizing voltage if the auxiliary voltage is connected to a zero-sequence voltage source (such as the open delta connected secondary of VTs). The zero-sequence (V0) or auxiliary voltage (V_X), accordingly, must be greater than 0.02 x VT to be validated for use as a polarizing signal. If the polarizing signal is invalid, neither forward nor reverse indication is given.

If `Current` polarizing mode is selected, the element uses the angle of the ground current measured on the ground current input. The ground CT must be connected between the ground and neutral point of an adequate source of ground current. The ground current must be greater than 0.05 x CT to be validated as a polarizing signal. If the polarizing signal is not valid, neither forward nor reverse indication is given. For a choice of current polarizing, it is recommended that the polarizing signal be analyzed to ensure that a known direction is maintained irrespective of the fault location. For example, if using an autotransformer neutral current as a polarizing source, it should be ensured that a reversal of the ground current does not occur for a high-side fault. The low-side system impedance should be assumed minimal when checking for this condition. A similar situation arises for a wye/delta/wye transformer, where current in one transformer winding neutral may reverse when faults on both sides of the transformer are considered.

If `Dual` polarizing mode is selected, the element performs both directional comparisons as described above. A given direction is confirmed if either voltage or current comparators indicate so. If a conflicting (simultaneous forward and reverse) indication occurs, the forward direction overrides the reverse direction.

POLARIZING VOLTAGE

Range: Calculated V0, Measured VX(VN)

Default: Calculated V0

Selects the polarizing voltage used by the directional unit when `Voltage` or `Dual` polarizing mode is set. The polarizing voltage can be programmed to be either the zero-sequence voltage calculated from the phase voltages (`Calculated V0`) or supplied externally as an auxiliary voltage (`Measured VX` (VN))

POLARIZING VOL SUPV

Range (3.xx): 0.005 to 0.100 x VT in steps of 0.005 x VT

Range (4.10): 0.005 to 0.400 x VT in steps of 0.005 x VT

Default: 0.020 x VT

The zero-sequence or auxiliary voltage must be greater than the polarizing supervision voltage configured in this setting, to be validated for use as a polarizing signal. If the polarizing signal is invalid, neither forward nor reverse indication is given.

POS SEQ RESTRAINT

Range: 0.000 to 0.500 in steps of 0.001

Default: 0.063

This setting controls the amount of the positive-sequence restraint. Set to zero to remove the restraint. Set higher if large system unbalances or poor CT performance are expected.

FORWARD ECA

Range: –180° to 180° in steps of 1°

Default: 75°

This setting defines the element characteristic angle (ECA) for the forward direction in “Voltage” polarizing mode. “Current” polarizing mode uses a fixed ECA of 0°. The ECA in the reverse direction is the angle set for the forward direction shifted by 180°.

FORWARD LIMIT ANGLE

Range: 40° to 90° in steps of 1°

Default: 90°

This setting defines a symmetrical (in both directions from the ECA) limit angle for the forward direction.

FORWARD PICKUP

Range (3.xx): 0.050 to 30.000 x CT in steps of 0.001 x CT

Range (4.10): 0.010 to 30.000 x CT in steps of 0.001 x CT

Default: 0.050 x CT

This setting defines the Pickup level for the overcurrent unit of the element in the forward direction. When selecting this setting it must be kept in mind that the design uses a ‘positive-sequence restraint’ technique for the `Calculated 3I0` mode of operation.

REVERSE LIMIT ANGLE

Range: 40° to 90° in steps of 1°

Default: 90°

This setting defines a symmetrical (in both directions from the ECA) limit angle for the reverse direction.

REVERSE PICKUP

Range (3.xx): 0.050 to 30.000 x CT in steps of 0.001 x CT

Range (4.10): 0.010 to 30.000 x CT in steps of 0.001 x CT

Default: 0.050 x CT

This setting defines the Pickup level for the overcurrent unit of the element in the reverse direction. When selecting this setting it must be kept in mind that the design uses a ‘positive-sequence restraint’ technique for the `Calculated 3I0` mode of operation.

BLOCK

Range: Off, Any FlexLogic operand

Default: Off

EVENTS

Range: Enabled, Disabled

Default: Enabled

TARGETS

Range: Self-reset, Latched, Disabled

Default: Self-reset

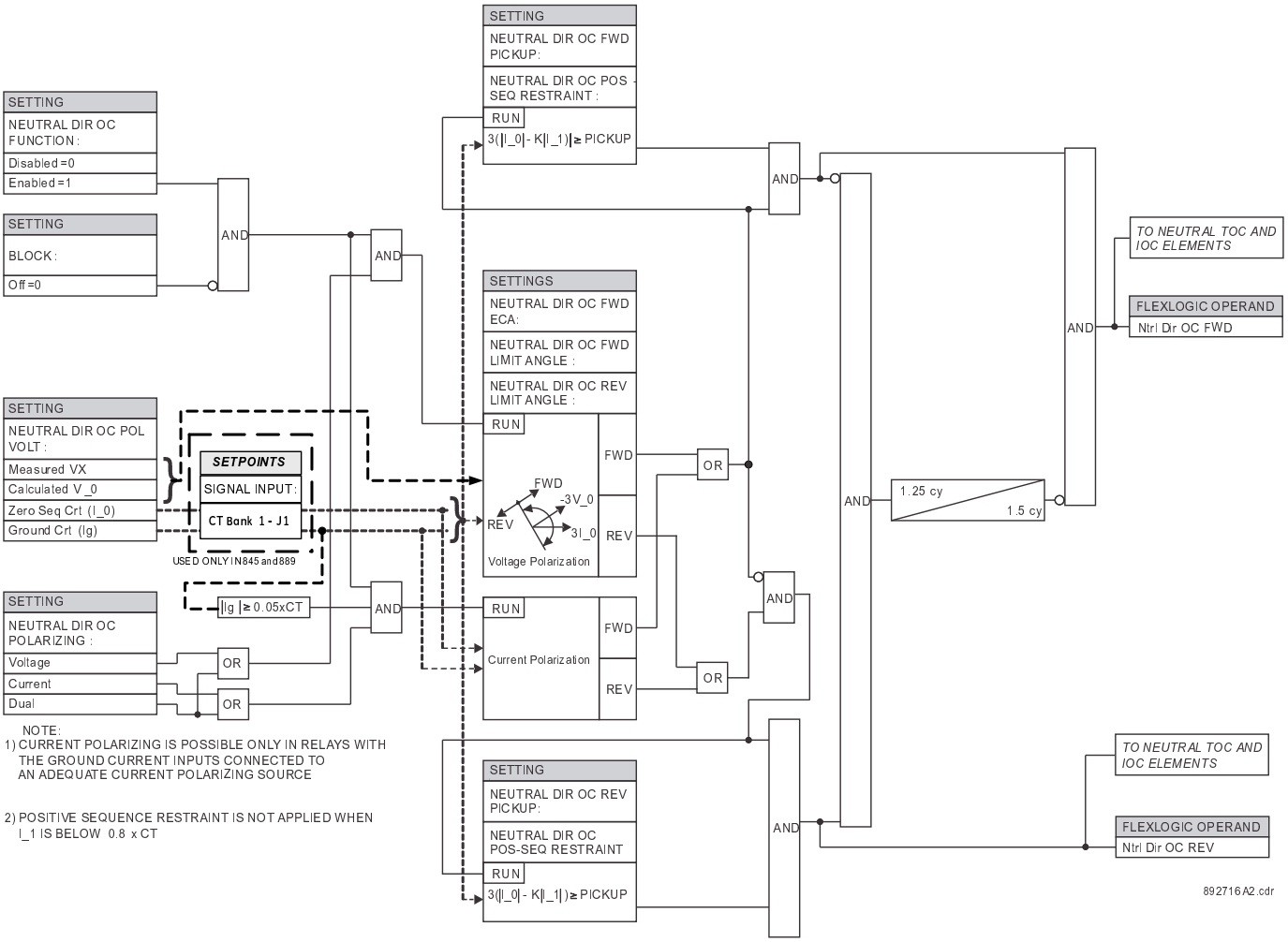

Figure 130: Neutral Directional Overcurrent Protection logic diagram

8.4.8 GROUND TIME OVERCURRENT PROTECTION (51G)

The settings of Ground Time Overcurrent protection element are applied to the ground input current to produce *Trip* or *Pickup* flags. The Ground TOC Pickup flag is asserted when the ground current is above the PKP value. The Ground TOC Trip flag is asserted if the element stays picked up for the time defined by the selected inverse curve and the magnitude of the current. The element drops from Pickup without operation if the measured current drops below 97 to 98% of the Pickup value before the time for operation is reached. When Definite Time is selected, the time for Ground TOC operation is defined only by the ***TDM*** setting.

Path: ***Setpoints*** > ***Protection*** > ***Group 1(6)*** > ***Current*** > ***Ground TOC 1(X)***

FUNCTION

Range: Disabled, Trip, Alarm, Latched Alarm, Configurable

Default: Disabled

SIGNAL INPUT

Range: Dependent upon the order code

Default: CT Bank 1-J1

This setting provides the selection for the current input bank. The default bank names can be changed in ***Setpoints*** > ***System*** > ***Current Sensing*** > ***[Name]*** > ***CT Bank Name***.

INPUT

Range: Phasor, RMS

Default: Phasor

PICKUP

Range: 0.050 to 30.000 x CT in steps of 0.001 x CT

Default: 1.000 x CT

CURVE

Range: IEEE Extremely/Very/Moderately Inverse, ANSI Extremely/Very/Normally/Moderately Inverse, Definite time IEC A/B/C and Short Inverse, IAC Extremely/Very/Inverse/Short Inverse FlexCurve A/B/C/D, I2t, I4t

Default: IEEE, Moderately Inverse

TDM

Range: 0.05 to 600.00 in steps of 0.01

Default: 1.00

RESET

Range: Instantaneous, Timed

Default: Instantaneous

DIRECTION

Range: Disabled, Forward, Reverse

Default: Disabled

BLOCK

Range: Off, Any FlexLogic operand

Default: Off

OUTPUT RELAY X

Range: Operate, Do Not Operate

Default: Do Not Operate

EVENTS

Range: Enabled, Disabled

Default: Enabled

TARGETS

Range: Self-reset, Latched, Disabled

Default: Self-reset

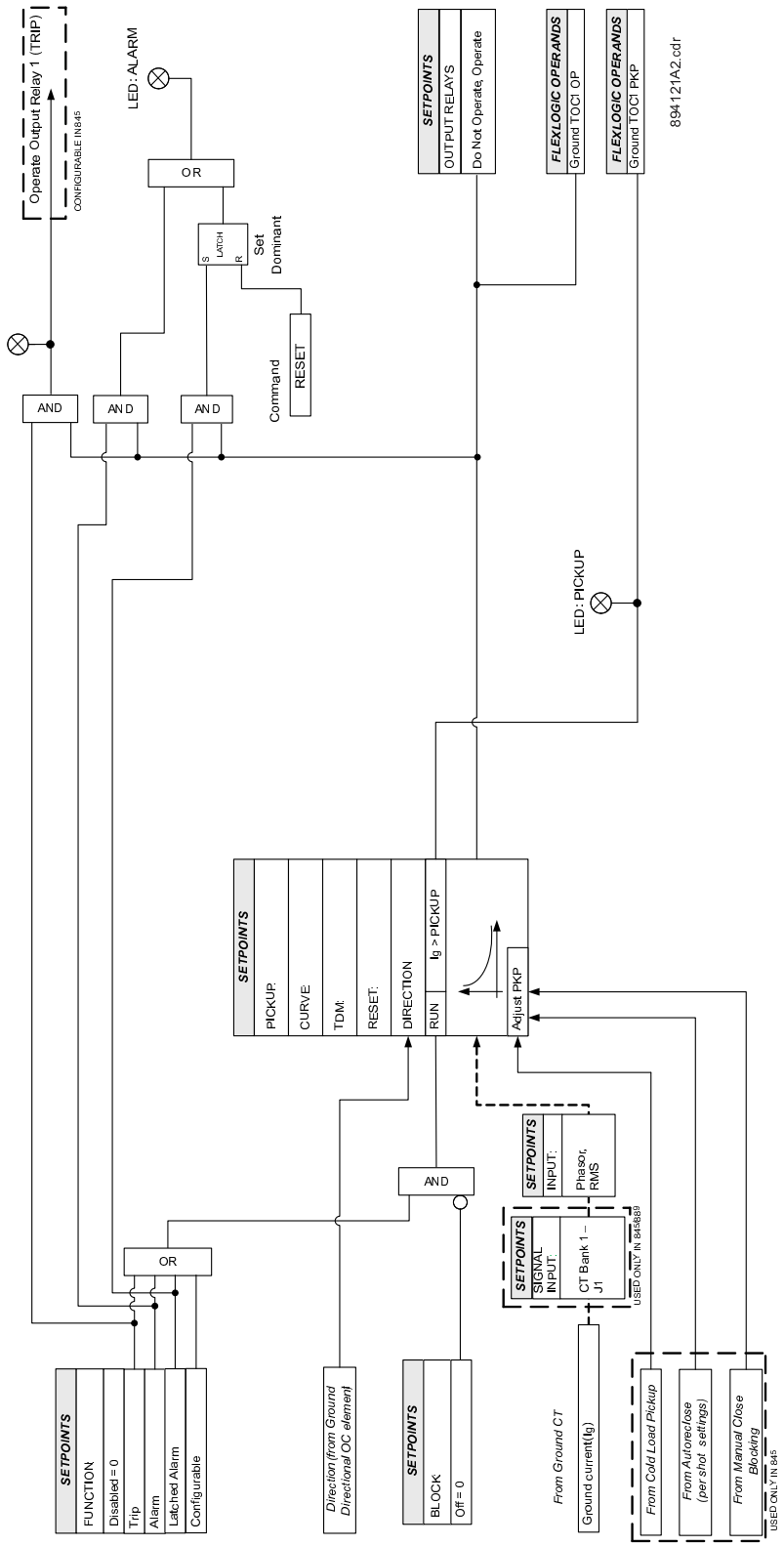

Figure 131: Ground Time Overcurrent Protection logic diagram

8.4.9 GROUND INSTANTANEOUS OVERCURRENT PROTECTION (50G)

The settings of the Ground Instantaneous Overcurrent protection element are applied to the measured Ground current for producing *Pickup* and *Trip* flags. The Ground IOC Pickup flag is asserted when the Ground current is

above the pickup value. The Ground IOC Operate flag is asserted if the element stays picked-up for the time defined by the Ground IOC ***PICKUP DELAY*** setting. If the The Pickup time delay is set to 0.000 seconds. The Pickup and Operate flags will be asserted at the same time. The element drops from Pickup without operation if the Ground current drops below 97 to 98% of the Pickup value.

Path: ***Setpoints*** > ***Protection*** > ***Group 1(6)*** > ***Current*** > ***Ground IOC 1(X)***

FUNCTION

Range: Disabled, Trip, Alarm, Latched Alarm, Configurable

Note: Relays with firmware version 4 and later have a `Latched Trip` *option*

Default: Disabled

SIGNAL INPUT

Range: dependent upon the order code

Default: CT Bank 1-J1

This setting provides the selection for the current input bank. The default bank names can be changed in ***Setpoints*** > ***System*** > ***Current Sensing*** > ***[Name]*** > ***CT Bank Name***.

PICKUP

Range (up to FW 3.xx): 0.050 to 30.000 x CT in steps of 0.001 x CT

Range (from FW 4.10): 0.010 to 30.000 x CT in steps of 0.001 x CT

Default (up to FW 3.xx): 1.00 x CT

Default (from FW 4.10): 0.200 x CT

DIRECTION

Range: Disabled, Forward, Reverse

Default: Disabled

PICKUP DELAY

Range: 0.000 to 6000.000 s in steps of 0.001 s

Default: 0.000 s

DROPOUT DELAY

Range: 0.000 to 6000.000 s in steps of 0.001 s

Default: 0.000 s

BLOCK

Range: Off, Any FlexLogic operand

Default: Off

OUTPUT RELAY X

Range: Operate, Do Not Operate

Default: Do Not Operate

EVENTS

Range: Enabled, Disabled

Default: Enabled

TARGETS

Range: Self-reset, Latched, Disabled

Default: Self-reset

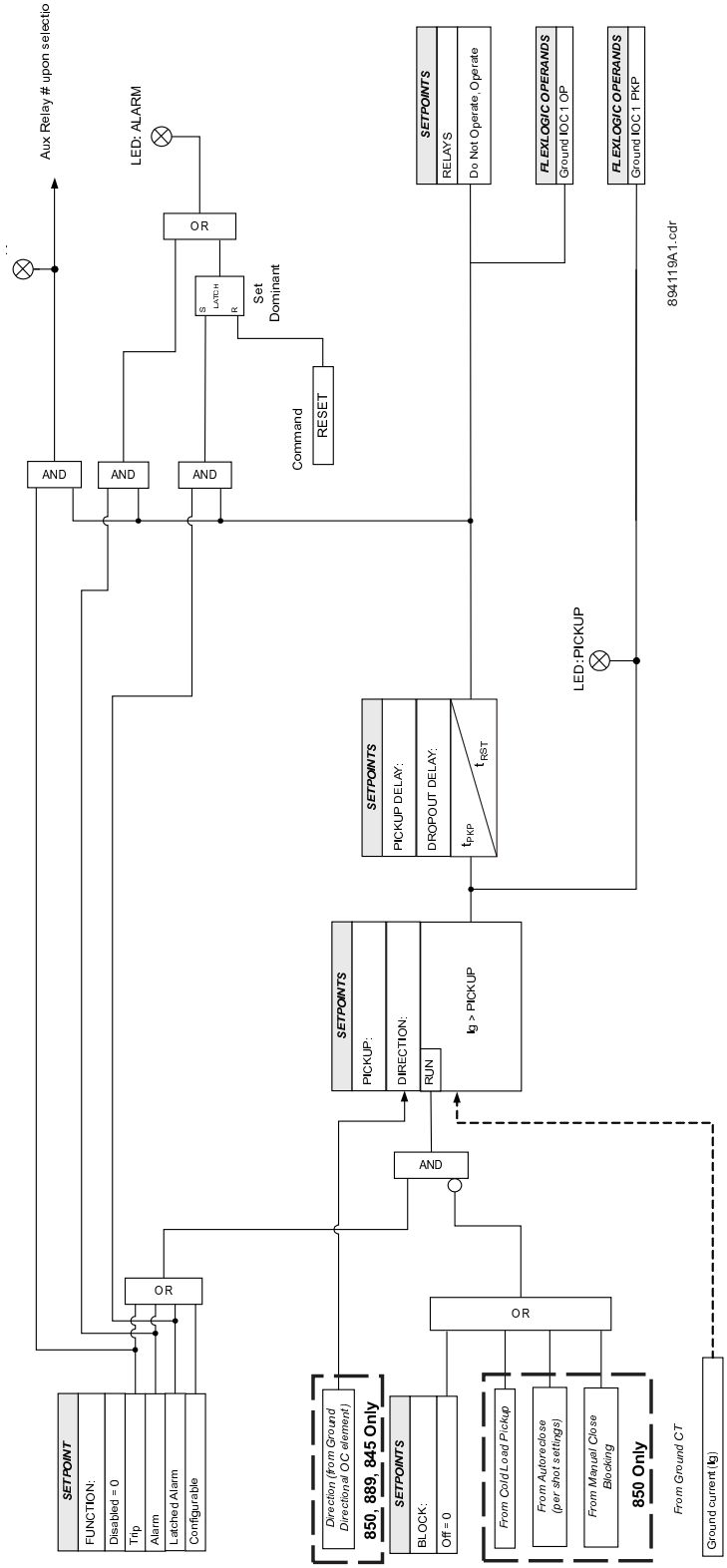

Figure 132: Ground Instantaneous Overcurrent Protection logic diagram

8.4.10 GROUND DIRECTIONAL OVERCURRENT PROTECTION (67G)

The Ground Directional Overcurrent protection element provides both forward and reverse fault direction indications shown by the operands Gnd Dir OC FWD and Gnd Dir OC REV respectively. The output operands are asserted if

the magnitude of the operating current is above a Pickup level (overcurrent unit) and the fault direction is seen as forward or reverse, respectively (directional unit).

The *overcurrent unit* responds to the magnitude of a fundamental frequency phasor of the ground current. There are separate Pickup settings for the forward-looking and reverse-looking functions.

The *directional unit* uses the ground current (Ig) for fault direction discrimination, and can be polarizing, by either `Calculated V0` zero-sequence voltage or `Measured VX` zero sequence voltage. The following tables define the ground directional overcurrent element.

Directional Unit				Overcurrent unit
Polarizing mode	**Direction**	**Compared phasors**		
Voltage	Forward	-V0	Ig	GROUND CURRENT (Ig)
Voltage	Reverse	-V0	-Ig	GROUND CURRENT (Ig)
Current	Forward	Ipol	Ig	GROUND CURRENT (Ig)
Current	Reverse	Ipol	-Ig	GROUND CURRENT (Ig)
Dual	Forward	-V0	Ig	GROUND CURRENT (Ig)
Dual	Forward	Ipol	Ig	GROUND CURRENT (Ig)
Dual	Reverse	-V0	-Ig	GROUND CURRENT (Ig)
Dual	Reverse	Ipol	-Ig	GROUND CURRENT (Ig)

Where:

V0 = 1/3 * (Vag + Vbg + Vcg) = zero sequence voltage

When ***POLARIZING VOLTAGE*** is set to `Measured VX`, one-third of this voltage is used in place of V0. The following figure explains the usage of the voltage polarized directional unit of the element by showing the voltage-polarized phase angle comparator characteristics for a phase A to ground fault, with:

- ECA = 90° (element characteristic angle = centerline of operating characteristic)
- FWD LA = 80° (forward limit angle = the ± angular limit with the ECA for operation)
- REV LA = 80° (reverse limit angle = the ± angular limit with the ECA for operation).

The element incorporates a current reversal logic: if the reverse direction is indicated for at least 1.25 of a power system cycle, the prospective forward indication will be delayed by 1.5 of a power system cycle. The element is designed to emulate an electromechanical directional device. Larger operating and polarizing signals will result in faster directional discrimination bringing more security to element operation.

The forward-looking function is designed to be more secure as compared to the reverse-looking function, and should therefore be used for the tripping direction. The reverse-looking function is designed to be faster as compared to the forward-looking function and should be used for the blocking direction. This allows better protection coordination.

The above bias should be taken into account when using the Ground Directional Overcurrent element to directionalize other protection elements.

For Dual Feeder Applications, for Signal Input of CT Bank 1 – J1 >> VT Bank 1 -J2 is considered as Polarizing voltage source. And, For CT Bank 2 – K1 >> VT Bank 2 – K2 is considered as Polarizing Voltage Source.

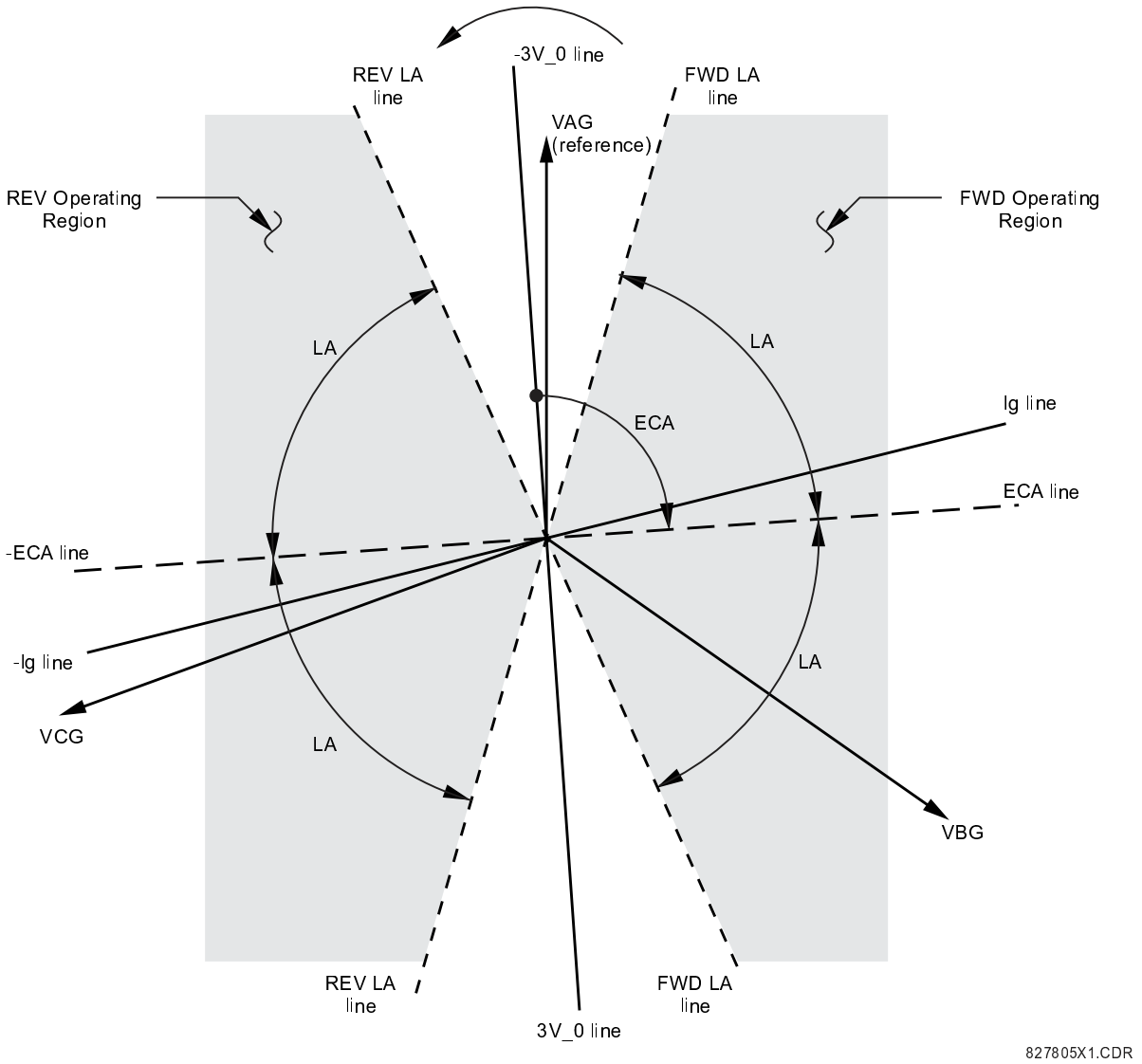

Figure 133: Ground Directional Voltage-polarized Characteristics

8.4.11 SENSITIVE GROUND TIME OVERCURRENT PROTECTION (51SG)

The settings of the Sensitive Ground Time Overcurrent protection element are applied to the Sensitive Ground input current to produce *Trip* or *Pickup* flags. The Sensitive Ground TOC Pickup flag is asserted when the Sensitive Ground current is above the PKP value. The Sensitive Ground TOC Trip flag is asserted if the element stays picked up for the time defined by the selected inverse curve and the magnitude of the current. The element drops from Pickup without operation if the measured current drops below 97-98% of the Pickup value before the time for operation is reached. When Definite Time is selected, the time for Sensitive Ground TOC operation is defined only by the ***TDM*** setting.

Path: ***Setpoints*** > ***Protection*** > ***Group 1(6)*** > ***Current*** > ***Sensitive Ground TOC 1(X)***

FUNCTION

Range: Disabled, Trip, Alarm, Latched Alarm, Configurable

Default: Disabled

INPUT

Range: Phasor, RMS

Default: Phasor

This selection defines the method of processing of the current signal. It can be Root Mean Square (RMS) or Fundamental Phasor Magnitude.

PICKUP

Range: 0.005 to 3.000 x CT in steps of 0.001 x CT

Default: 1.000 x CT

This setting sets the sensitive ground overcurrent pickup level specified as a multiplier of the nominal CT current. For example, a PKP setting of 0.9 x CT with 300:5 CT translates into 270A primary current.

CURVE

Range: IEEE Extremely/Very/Moderately Inverse, ANSI Extremely/Very/Normally/Moderately Inverse, IEC A/B/C and Short Inverse, IAC Extremely/Very/Inverse/Short Inverse, I2t, I4t, FlexCurve A/B/C/D, Definite time

Default: IEEE Mod Inverse

This setting sets the shape of the selected over-current inverse curve. If none of the standard curve shapes is appropriate, a FlexCurve can be created. Refer to the User curve and the FlexCurve setup for more details on their configurations and usage.

TDM

Range: 0.05 to 600.00 in steps of 0.01

Default: 1.00

This setting provides the selection for the Time Dial Multiplier by which the times from the inverse curve are modified. For example if an ANSI Extremely Inverse curve is selected with TDM = 2, and the fault current is 5 times bigger than the PKP level, the operation of the element will occur but not before 2.59s of time has elapsed from pickup.

RESET

Range: Instantaneous, Timed

Default: Instantaneous

The selection of an Instantaneous or a Timed reset time is provided by this setting. If Instantaneous reset is selected, the Sensitive Ground TOC element will reset instantaneously providing the current drops below 97-98% of the Sensitive Ground TOC PKP level, before the time for operation is reached.

DIRECTION

Range: Disabled, Forward, Reverse

Default: Disabled

This setting defines the operation direction of the Sensitive Ground TOC element. Entering the direction for the Sensitive Ground TOC element does not automatically apply the selection. The direction detection is performed by the element Sensitive Ground Directional OC, which must be enabled and configured according to the directionality criteria of the feeder currents.

BLOCK

Range: Off, Any FlexLogic operand

Default: Off

The Sensitive Ground TOC is blocked, when the selected operand is asserted.

OUTPUT RELAY X

Range: Operate, Do Not Operate

Default: Do Not Operate

EVENTS

Range: Enabled, Disabled

Default: Enabled

This also sets the events of Sensitive Ground TOC function.

TARGETS

Range: Self-reset, Latched, Disabled

Default: Self-reset

The selection of Self-reset or Latched settings enables the targets of the Sensitive Ground TOC function.

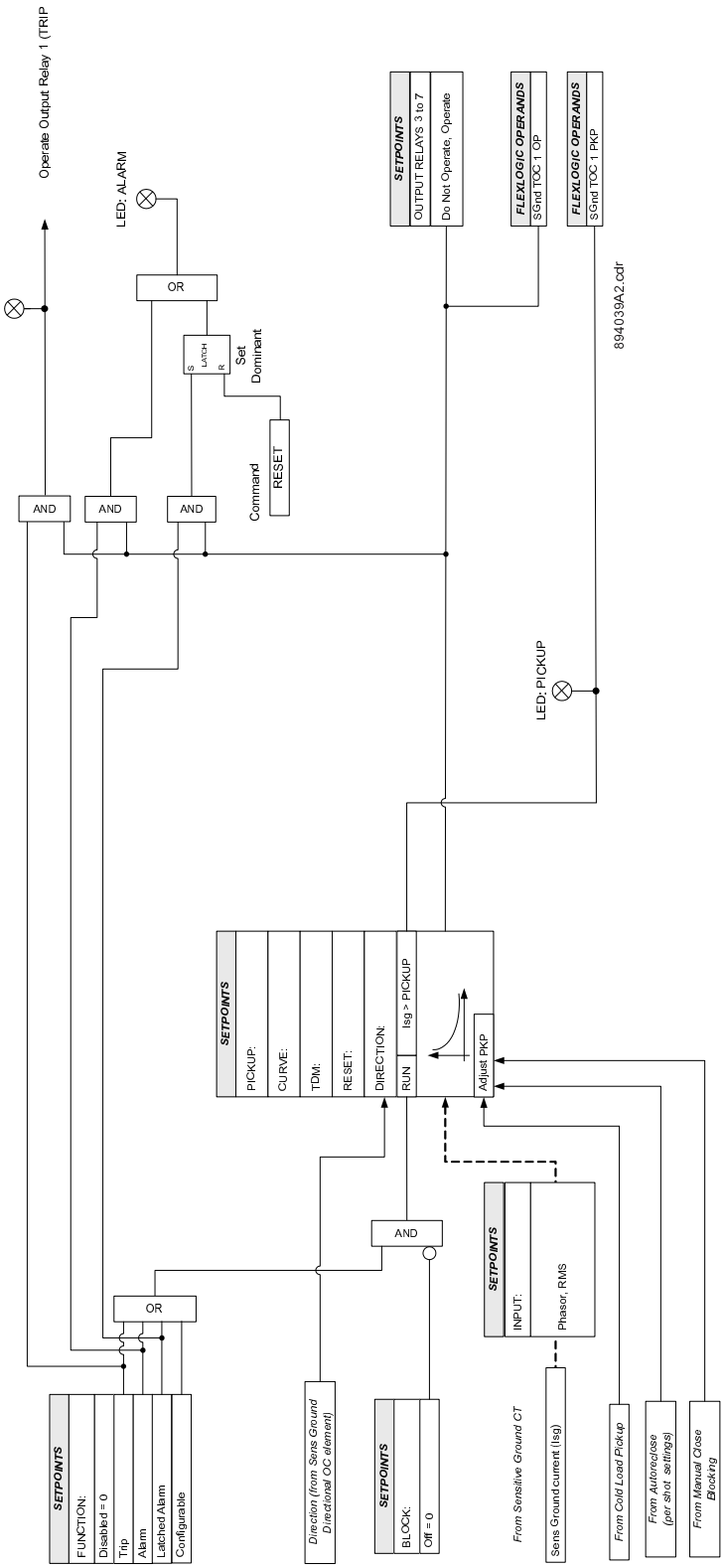

Figure 134: Sensitive Ground Time Overcurrent Protection logic diagram

8.4.12 SENSITIVE GROUND INSTANTANEOUS OVERCURRENT PROTECTION (50SG)

The settings of the Sensitive Ground Instantaneous Overcurrent protection element are applied to the measured Sensitive Ground current for producing *Pickup* and *Trip* flags. The Sensitive Ground IOC Pickup flag is asserted when the Sensitive Ground current is above the Pickup value. The Sensitive Ground IOC Operate flag is asserted if the element stays picked-up for the time defined by the Sensitive Ground IOC ***PICKUP DELAY*** setting. If the Pickup time delay is set to 0.00 seconds, the Pickup and Operate flags are asserted at the same time. The element drops from Pickup without operation if the Sensitive Ground current drops below 97 to 98% of the Pickup value.

Path: ***Setpoints*** > ***Protection*** > ***Group 1(6)*** > ***Current*** > ***Sensitive Ground IOC 1(X)***

FUNCTION

Range: Disabled, Trip, Alarm, Latched Alarm, Configurable

Note: Relays with firmware version 4 and later have a `Latched Trip` *option*

Default: Disabled

PICKUP

Range: 0.002 to 3.000 x CT in steps of 0.001 x CT

Default: 1.000 x CT

This setting sets the instantaneous Sensitive Ground overcurrent pickup level specified as a multiplier of the nominal CT current for sensitive CT input. For example, a PKP setting of 0.9 x CT with 300:5 CT translates into 270A primary current.

DIRECTION

Range: Disabled, Forward, Reverse

Default: Disabled

This setting defines the operation direction of the Sensitive Ground time overcurrent element. Entering the direction for the Sensitive Ground IOC element, does not automatically apply the selection. The direction detection is performed by the element Sensitive Ground Directional OC, which must be enabled and configured according to the directionality criteria of the feeder currents.

PICKUP DELAY

Range: 0.000 to 6000.000 s in steps of 0.001 s

Default: 0.000 s

This setting provides the selection for the pickup time delay used to delay the operation of the protection.

DROPOUT DELAY

Range: 0.000 to 6000.000 s in steps of 0.001 s

Default: 0.000 s

This setting provides the selection for the dropout time delay used to delay the dropout of the detection of the overcurrent condition.

BLOCK

Range: Off, Any FlexLogic operand

Default: Off

The Sensitive Ground IOC is blocked, when the selected operand is asserted.

OUTPUT RELAY X

Range: Operate, Do Not Operate

Default: Do Not Operate

EVENTS

Range: Enabled, Disabled

Default: Enabled

TARGETS

Range: Self-reset, Latched, Disabled

Default: Self-reset

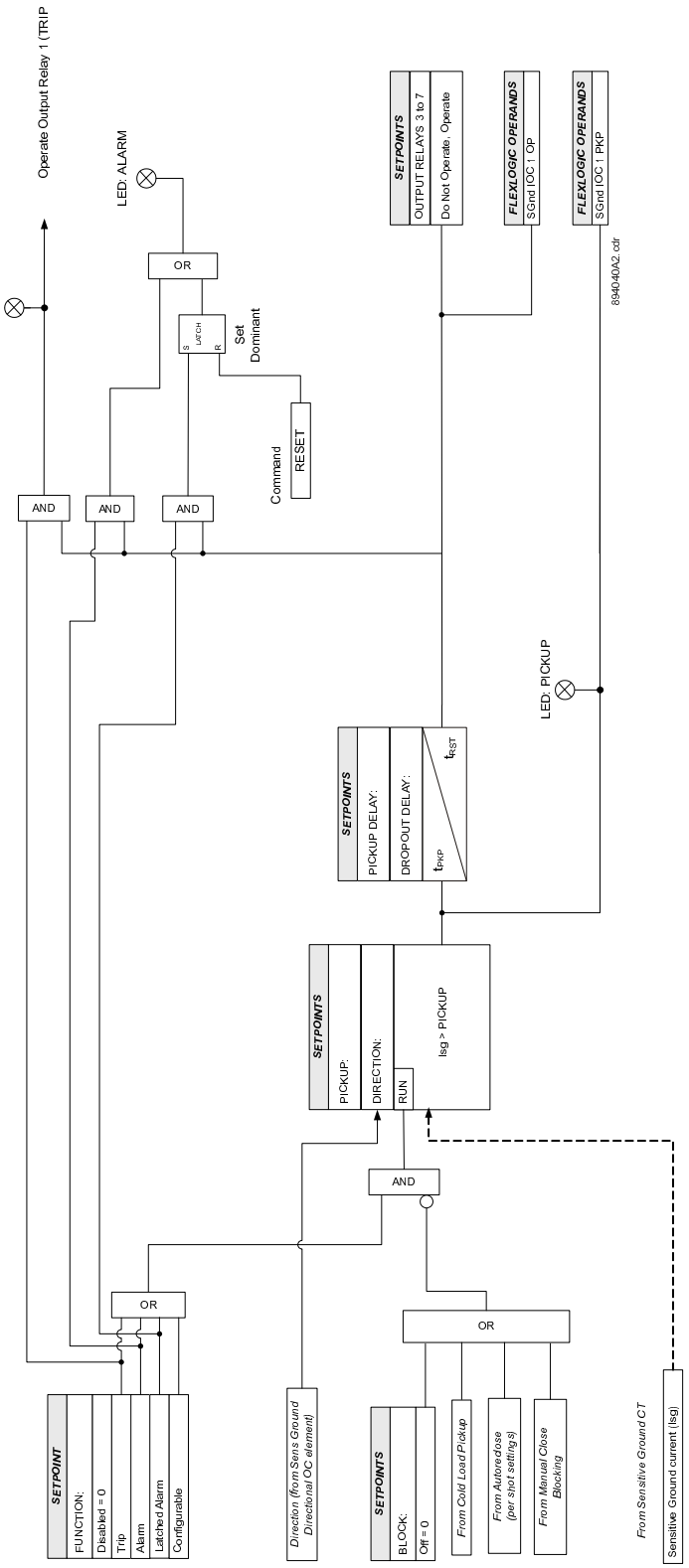

Figure 135: Sensitive Ground Instantaneous Overcurrent Protection logic diagram

8.4.13 SENSITIVE GROUND DIRECTIONAL OVERCURRENT PROTECTION (67SG)

The Sensitive Ground Directional Overcurrent protection element provides both forward and reverse fault direction indications shown by the operands S.Gnd Dir OC FWD and S.Gnd Dir OC REV respectively. The output operands are asserted if the magnitude of the operating current is above a Pickup level (overcurrent unit) and the fault direction is seen as forward or reverse, respectively (directional unit).

The *overcurrent unit* responds to the magnitude of a fundamental frequency phasor of the sensitive ground current. There are separate Pickup settings for the forward-looking and reverse-looking functions.

The *directional unit* uses the sensitive ground current (Ig) for fault direction discrimination and may be programmed to use either zero-sequence voltage (`Calculated V0` or `Measured VX(VN)`), ground current (Ig), or both for polarizing. The following tables define the Sensitive Ground Directional Overcurrent element.

Directional Unit				Overcurrent unit
Polarizing mode	**Direction**	**Compared phasors**		
Voltage	Forward	-V0	Isg	GROUND CURRENT (Isg)
Voltage	Reverse	-V0	-Isg	GROUND CURRENT (Isg)
Current	Forward	Ipol	Isg	GROUND CURRENT (Isg)
Current	Reverse	Ipol	-Isg	GROUND CURRENT (Isg)
Dual	Forward	-V0	Isg	GROUND CURRENT (Isg)
Dual	Forward	Ipol	Isg	GROUND CURRENT (Isg)
Dual	Reverse	-V0	-Isg	GROUND CURRENT (Isg)
Dual	Reverse	Ipol	-Isg	GROUND CURRENT (Isg)

Where:

$$V_0 = 1/3 * (Vag + Vbg + Vcg) = \text{zero sequence voltage}$$

When POLARIZING VOLTAGE is set to “Measured VX,” one-third of this voltage is used in place of V_0. The following figure explains the usage of the voltage polarized directional unit of the element by showing the voltage-polarized phase angle comparator characteristics for a phase A to ground fault, with:

- ECA = 90° (element characteristic angle = centerline of operating characteristic)
- FWD LA = 80° (forward limit angle = the ± angular limit with the ECA for operation)
- REV LA = 80° (reverse limit angle = the ± angular limit with the ECA for operation)

The element incorporates a current reversal logic: if the reverse direction is indicated for at least 1.25 of a power system cycle, the prospective forward indication will be delayed by 1.5 of a power system cycle. The element is designed to emulate an electromechanical directional device. Larger operating and polarizing signals will result in faster directional discrimination bringing more security to element operation.

The forward-looking function is designed to be more secure as compared to the reverse-looking function, and should therefore be used for the tripping direction. The reverse-looking function is designed to be faster as compared to the forward-looking function and should be used for the blocking direction. This allows better protection coordination.

The above bias should be taken into account when using the Sensitive Ground Directional Overcurrent element to directionalize other protection elements.

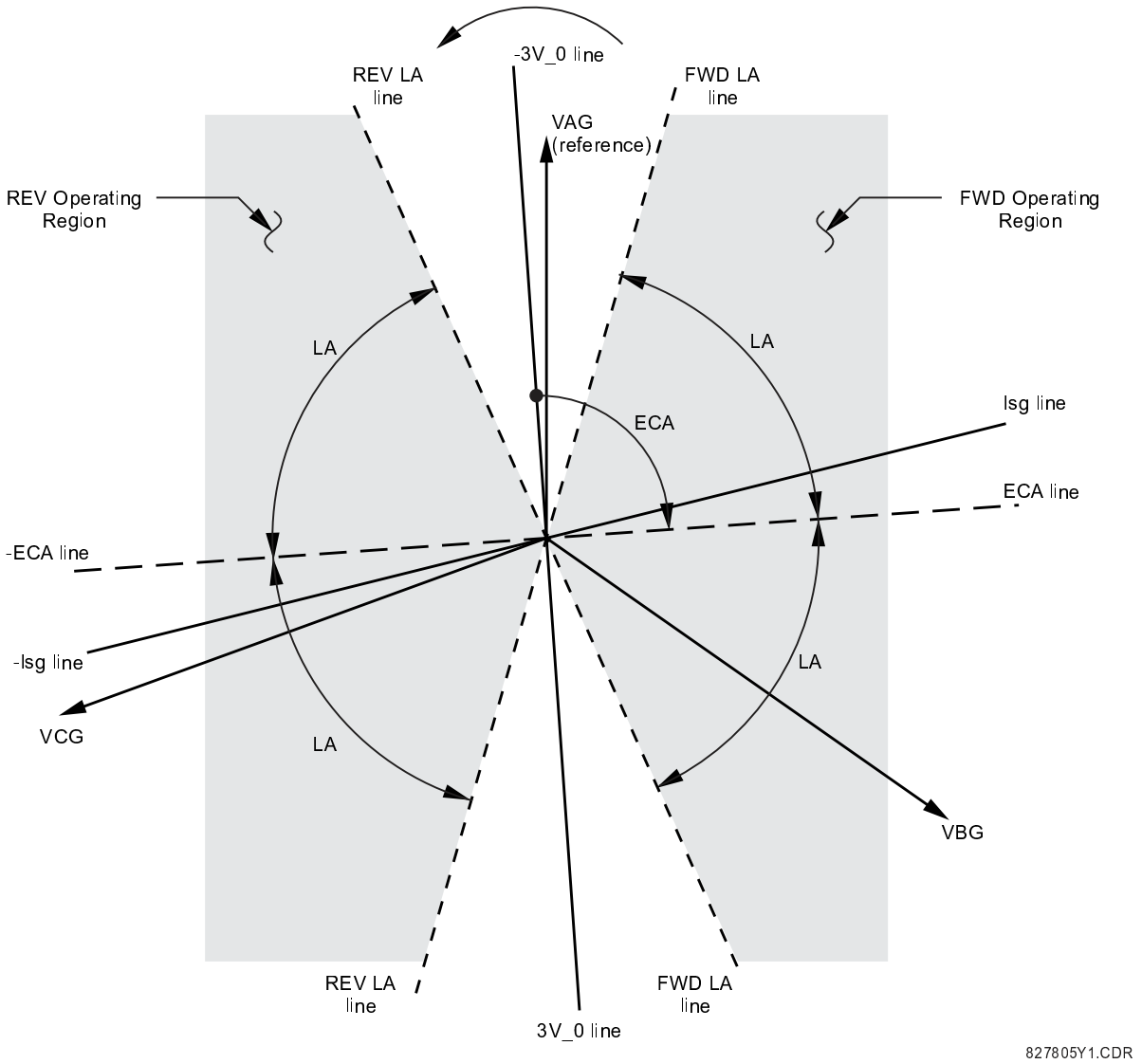

Figure 136: Sensitive Ground Directional Voltage-polarized Characteristics

For 850D dual feeder applications, when the signal input is from CT Bank 1 – J1, VT Bank 1 -J2 is used as the polarizing voltage source. Similarly, when the signal input is from CT Bank 2 – K1, VT Bank 2 – K2 is used as the polarizing voltage source.

Path: ***Setpoints*** > ***Protection*** > ***Group 1(6)*** > ***Current*** > ***Sens Ground Directional OC 1(X)***

FUNCTION

Range: Disabled, Enabled

Default: Disabled

POLARIZING MODE

Range: Voltage, Current, Dual

Default: Voltage

This setting selects the polarizing mode for the directional unit.

- If Voltage polarizing mode is selected, the element uses the zero-sequence voltage angle for polarization. Select either the zero-sequence voltage V_0, calculated from the phase voltages, or the zero-sequence voltage supplied externally as the auxiliary voltage V_X. The calculated V_0 can be used as polarizing voltage only if the voltage transformers are connected in Wye. The auxiliary voltage can be used as the polarizing voltage if the auxiliary voltage is connected to a zero-sequence voltage source (such as the open delta connected secondary of VTs). The zero-sequence (V_0) or auxiliary voltage (Vx), accordingly, must be greater than the voltage set under "Polarizing Volt Supv" to be validated for use as a polarizing signal. If the polarizing signal is invalid, neither forward nor reverse indication is given.
- If Current polarizing mode is selected, the element uses the angle of the ground current measured on the ground current input. The ground current must be greater than 0.05 x CT to be validated as a polarizing signal. If the polarizing signal is not valid, neither forward nor reverse indication is given. For a choice of current polarizing, it is recommended that the polarizing signal be analyzed to ensure that a known direction is maintained irrespective of the fault location.
- If Dual polarizing mode is selected, the element performs both directional comparisons as described above. A given direction is confirmed if either voltage or current comparators indicate so. If a conflicting (simultaneous forward and reverse) indication occurs, the forward direction overrides the reverse direction.

POLARIZING VOLTAGE

Range: Calculated V0, Measured VX(VN)

Default: Calculated V0

Selects the polarizing voltage used by the directional unit when "Voltage" or "Dual" polarizing mode is set. The polarizing voltage can be programmed to be either the zero-sequence voltage calculated from the phase voltages ("Calculated V_0") or supplied externally as an auxiliary voltage ("Measured VX(VN)").

POLARIZING VOL SUPV

Range: 0.005 to 0.100 x VT in steps of 0.005 x VT

Default: 0.020 x VT

The zero-sequence (V_0) or auxiliary voltage (Vx), accordingly, must be greater than the Polarizing supervision voltage configured in this setting, to be validated for use as a polarizing signal. If the polarizing signal is invalid, neither forward nor reverse indication is given.

FORWARD ECA

Range: –90° to 90° in steps of 1°

Default: 75°

This setting defines the element characteristic angle (ECA) for the forward direction in "Voltage" polarizing mode. "Current" polarizing mode uses a fixed ECA of 0°. The ECA in the reverse direction is the angle set for the forward direction shifted by 180°.

FORWARD LIMIT ANGLE

Range: 40° to 90° in steps of 1°

Default: 90°

This setting defines a symmetrical (in both directions from the ECA) limit angle for the forward direction.

FORWARD PICKUP

Range: 0.005 to 3.000 x CT in steps of 0.001 x CT

Default: 0.050 x CT

This setting defines the Pickup level for the overcurrent unit of the element in the forward direction.

REVERSE LIMIT ANGLE

Range: 40° to 90° in steps of 1°

Default: 90°

This setting defines a symmetrical (in both directions from the ECA) limit angle for the reverse direction.

REVERSE PICKUP

Range: 0.005 to 3.000 x CT in steps of 0.001 x CT

Default: 0.050 x CT

This setting defines the Pickup level for the overcurrent unit of the element in the reverse direction.

BLOCK

Range: Off, Any FlexLogic operand

Default: Off

EVENTS

Range: Enabled, Disabled

Default: Enabled

TARGETS

Range: Self-reset, Latched, Disabled

Default: Self-reset

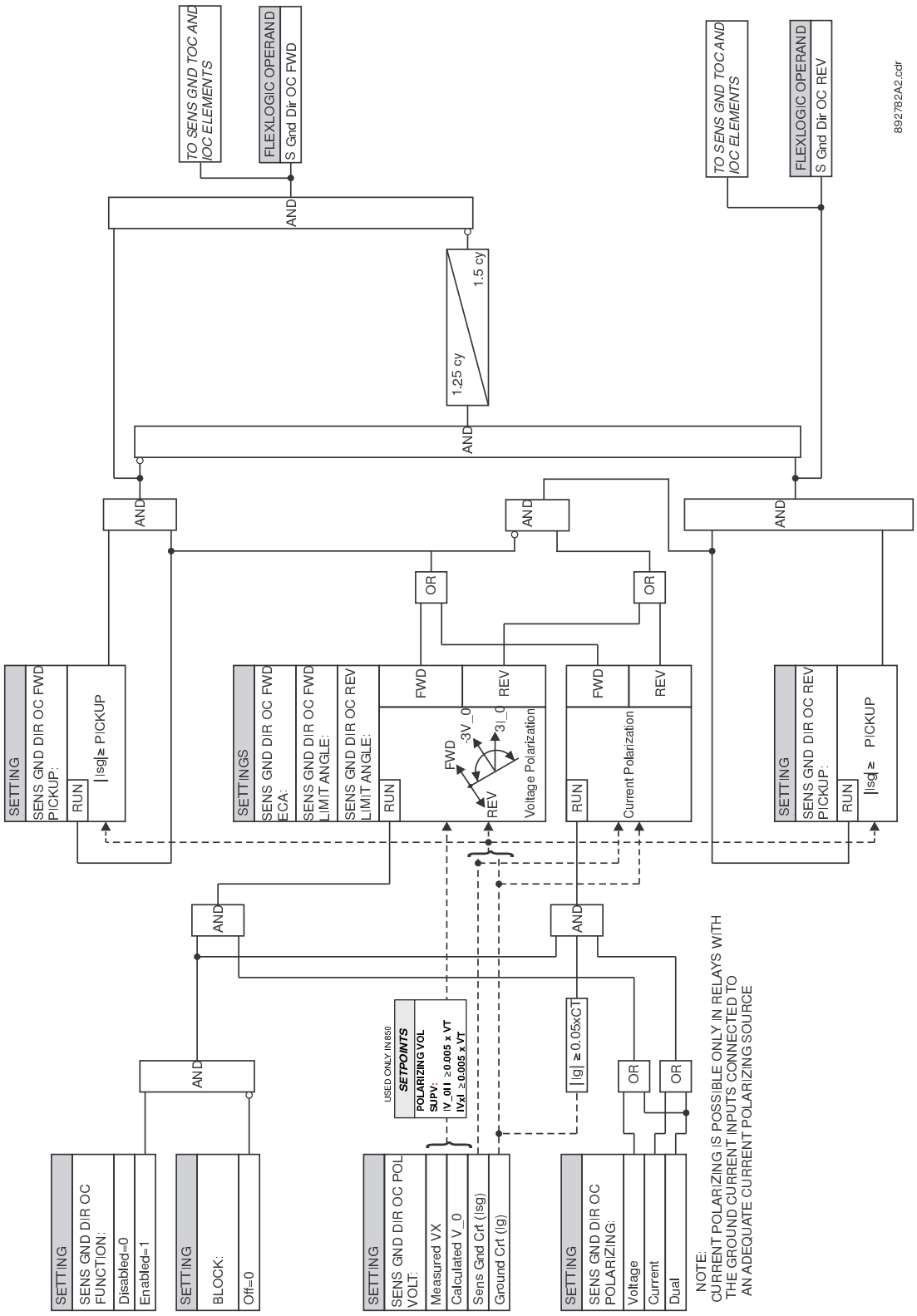

Figure 137: Sensitive Ground Directional Overcurrent Protection logic diagram

8.4.14 RESTRICTED GROUND FAULT (87G)

Restricted Ground Fault (RGF) protection provides ground fault detection for low-magnitude ground fault currents primarily for ground faults close to the neutral point of the wye connected transformer winding. An internal ground

fault on an impedance grounded wye winding produces a low magnitude ground fault current depending on the position of the fault with respect to the winding neutral point.

The diagram below shows the dependence of the fault current on the fault distance from the neutral point.

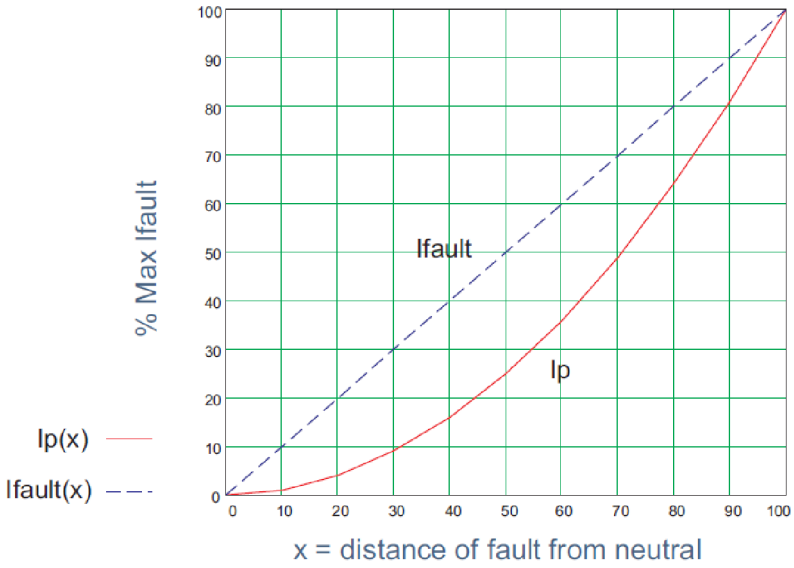

Figure 138: Fault current with respect to distance from neutral

The resultant primary current can be negligible for ground winding faults within 35% of the distance from the neutral point since the fault voltage is not the system voltage, but rather the result of the transformation ratio between the primary windings and the percentage of shorted turns.

Application of Restricted Ground Fault protection extends the fault coverage towards the neutral point for low-impedance grounded winding.

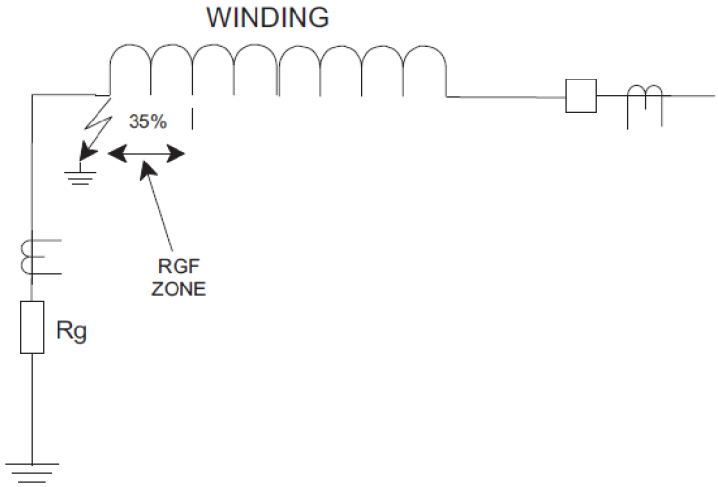

Figure 139: Restricted Ground Fault zone of protection

RGF protection in the 8-series range of relays uses a low impedance current differential scheme. The relay calculates the magnitude of the ground differential current as an absolute value from the vector summation of the computed residual current, and the measured ground current, and applies a restraining current defined as the maximum measured line current (Imax) to produce a percent slope value. The slope setting allows determination of the sensitivity of the element based on the class and quality of the CTs used. The figure below shows typical wiring between the winding and ground CTs and the CT terminals, to assure correct performance of the protection.

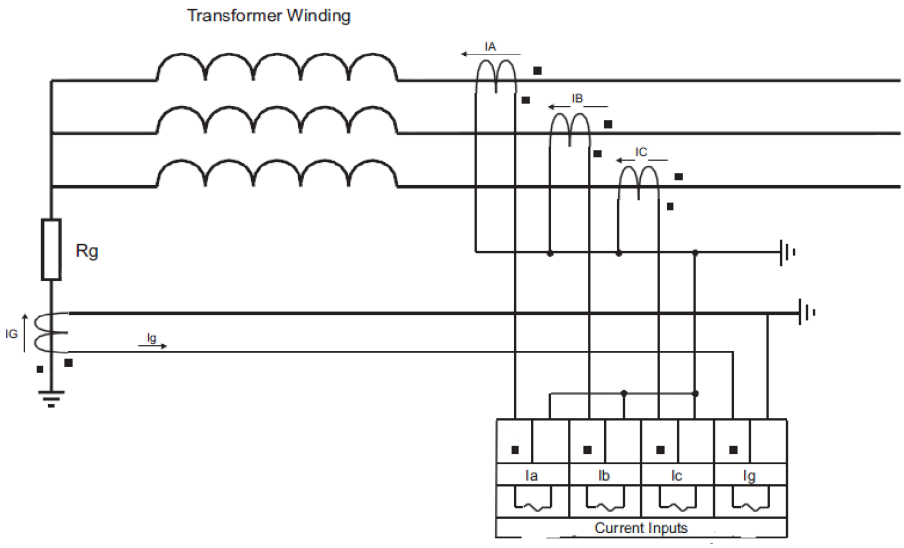

Figure 140: Three CT wiring for the Restricted Ground Fault protection

RGF protection includes ground current supervision mechanism to provide more security during external non-ground faults associated with CT saturation. This can cause spurious neutral currents, which may jeopardize the security of the RGF 1 protection. Therefore, when the ***GROUND CURRENT SUPERVISION*** setting is enabled, the algorithm checks whether the ground current measured by the relay satisfies the selected ***GROUND CURRENT SUPERV LEVEL***, before making an operation decision. The ground current supervision is not active if the ***GROUND CURRENT SUPERVISION*** is selected as `Disabled`. The RGF 1 protection works without the supervision as well.

The settings of this function are applied to the ground and all three phase currents to produce pickup and trip flags. The RGF 1 pickup flag is asserted, when the restrained ground differential current is above the PKP value. The RGF 1 operate flag is asserted if the element stays picked up for the time defined in ***RGF 1 PKP DELAY***. The element drops from Pickup without operation, if the calculated restrained ground differential current drops below 97-98% of the Pickup value, before the time for operation is reached.The Restricted Ground Fault function can be inhibited by a blocking input.

Path: ***Setpoints*** > ***Protection*** > ***Group 1(6)*** > ***Current*** > ***RGF 1 (X)***

FUNCTION

Range: Disabled, Trip, Alarm, Latched Alarm, Configurable

Note: Relays with firmware version 4 and later have a `Latched Trip` *option*

Default: Disabled

SIGNAL INPUT

Range: dependent upon the order code

Default: CT Bank 1 -J1

PICKUP

Range: 0.050 to 30.000 x CT in steps of 0.001 x CT

Default: 0.300 x CT

This setting defines the minimum Pickup level of the ground differential current required for operation. The Pickup value is expressed in times Phase CT (primary) rating.

SLOPE

Range: 0 to 100% in steps of 1%

Default: 50%

This setting defines the slope as the ratio between the ground differential current and the maximum line current (ground restraining current) as a percentage. The RGF 1 element operates if the actual ground differential/ restraint ratio is greater than the slope and the ground differential current is greater than the RGF 1 Pickup setting.

PICKUP DELAY

Range: 0.000 to 6000.000 s in steps of 0.001 s

Default: 0.100 s

The RGF 1 Pickup Time Delay setting defines the time required for the RGF 1 element to operate after it has picked up. This time delay overrides the spurious ground differential current condition caused by CT saturation due to external non-ground faults, or during transformer energization. Since RGF 1 protection is intended to detect small ground fault currents, delayed clearance of such a fault is not a high concern. On the other hand delayed RGF 1 operation due to a spurious ground differential current caused by an out-of-zone fault can be used as a backup for downstream protections should they fail to clear the fault.

GND CURR SUPERV

Range: Disabled, Enabled

Default: Disabled

This setting enables or disables the ground current supervision of the RGF 1 function. If set to `Disabled`, the RGF 1 function works without ground current supervision. The ground current level is monitored if the setting is set to `Enabled`.

GND CURR SUPERV LEVEL

Range: 0.050 to 30.000 x CT in steps of 0.001 x CT

Default: 0.300 x CT

This setting defines the level of measured ground current above which operation of the RGF 1 protection is allowed. The setting is presented as a times ground CT (primary) rating. The measured ground current is compared to the setting only if the ***GROUND CURRENT SUPERVISION*** is set to `Enabled`.

BLOCK

Range: Off, Any FlexLogic operand

Default: Off

OUTPUT RELAY X

Range: Operate, Do Not Operate

Default: Do Not Operate

EVENTS

Range: Enabled, Disabled

Default: Enabled

TARGETS

Range: Self-reset, Latched, Disabled

Default: Self-reset

Example: Transformer : 5MVA, 13.8kV/4.16kV, D/Yg1 type

- Rg = 10 ohms
- Phase CTs: 800:5
- Ground CT: 300:5
- Ifgnd (max) = 4.16kV/(10 ohms *√3) = 240A - maximum ground fault current

To detect a ground fault on the Wye winding at 15% distance from the neutral point, the relay shall detect ground differential current of:

- Igd = (15x240)/100 = 36 A/800 = 0.045 x CT – PKP setting for the RGF protection

The transformer loading is almost unaffected for ground faults close to the winding neutral, so that the winding rated load can be used as a reference in defining the RGF 1 slope setting. The rated load for 4.16kV Wye winding is:

- Irated = 5MVA/(4.16kV*√3) = 693 A

Slope setting, % = (36 A/693A)*100 = 5.1%. Select 5% if the transformer is expected to run most of the time at full load. If most of the time the transformer runs at lower than the nominal loads, the slope setting can be set to higher value:

- @ 70% load the slope setting would be: (36 / 485 A)*100 = 7%
- @ 50% load the slope setting would be: (36 / 346 A)*100 = 10%
- @ 30% load the slope setting would be: (36 / 208 A)*100 = 17%

The ground current supervision feature and/or the RGF 1 Pickup time delay can be used if CT saturation due to heavy external fault, is a concern.

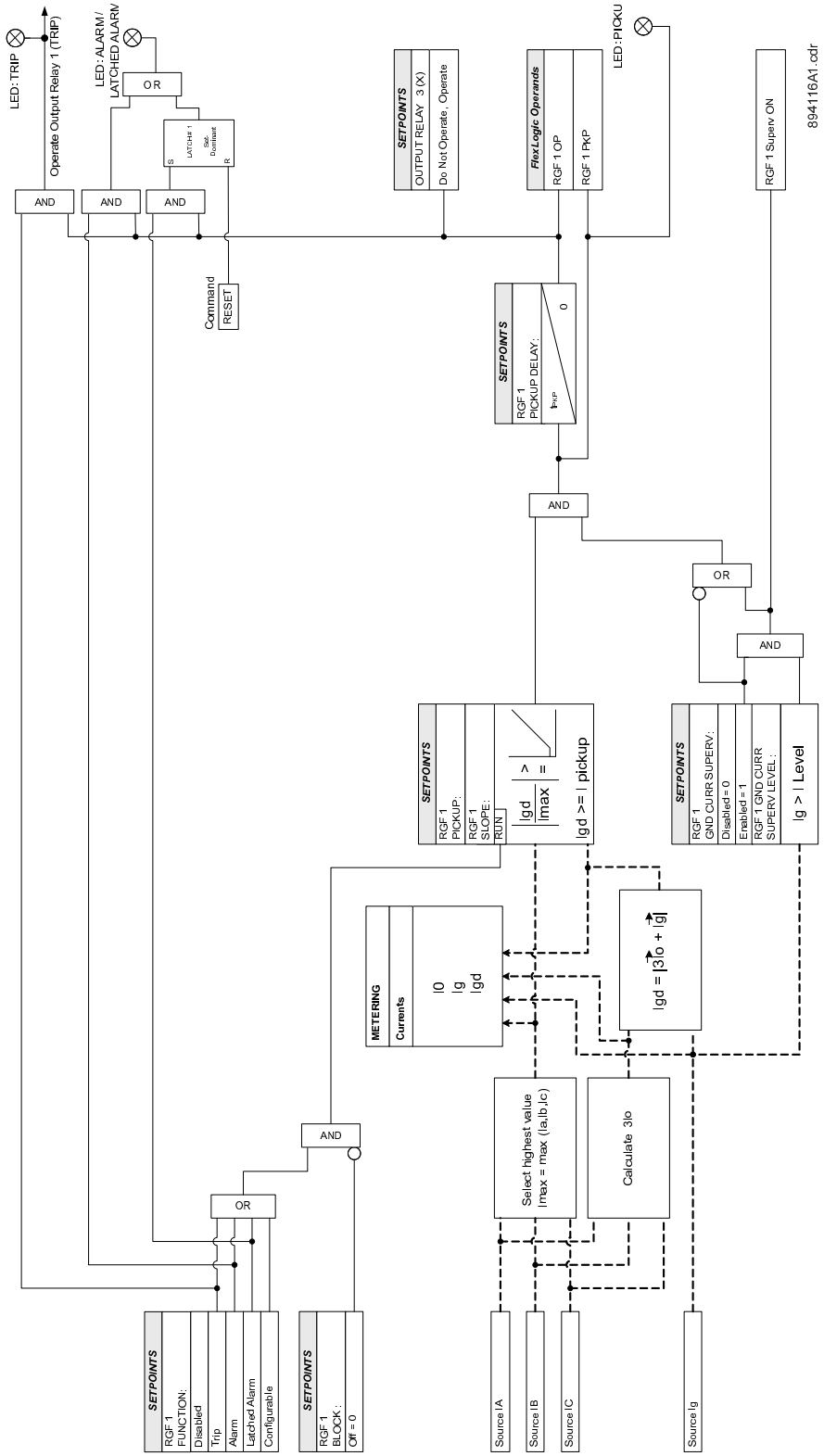

Figure 141: Restricted Ground Fault Protection Logic Diagram

8.4.15 NEGATIVE SEQUENCE INSTANTANEOUS OVERCURRENT PROTECTION (50_2)

The Negative Sequence Instantaneous Overcurrent element may be used to determine and clear unbalance in the system. The input for computing negative sequence current is the fundamental phasor value. The relay computes the negative sequence current magnitude |I2| using the following formula:

$$|I2|=1/3*|Ia+Ib*(1\angle 240^{o})+Ic*(1\angle 120\ ^{o})|$$

The element responds to the negative-sequence current and applies a positive sequence restraint for better performance: a small portion (12.5%) of the positive sequence current magnitude is subtracted from the negative sequence current magnitude when forming the operating quantity:

$$Iop = |I2| - K * |I_1|$$

where K = 1/8 and $|I_1| = 1/3*|Ia+Ib*(1\angle 120^{o})+Ic*(1\angle 240\ ^{o})|$

The positive sequence restraint allows for more sensitive settings by counterbalancing spurious negative-sequence currents resulting from:

- system unbalances under heavy load conditions
- current transformer (CT) transformation errors during three-phase faults
- fault inception and switch-off transients during three-phase faults.

The positive sequence restraint must be considered when testing for Pickup accuracy and response time (multiple of Pickup). The operating quantity depends on the way the test currents are injected into the relay (single-phase injection: Iop = 0.2917 * I_injected; three-phase injection, opposite rotation: Iop = I_injected).

The settings of this function are applied to the calculated negative sequence current to produce *Pickup* and *Trip* flags. The Negative Sequence IOC Pickup flag is asserted, when the negative sequence current is above the pickup value. The Negative Sequence IOC Operate flag is asserted if the element stays picked up for the time defined by the Negative Sequence IOC ***PICKUP DELAY*** setting. If the Pickup time delay is set to 0.000 seconds, the Pickup and Operate flags are asserted at the same time. The element drops from Pickup without operation if the negative sequence current drops below 97 to 98% of the Pickup value.

Path: ***Setpoints*** > ***Protection*** > ***Group 1(6)*** > ***Current*** > ***Negative Sequence IOC 1(X)***

FUNCTION

Range: Disabled, Trip, Alarm, Latched Alarm, Configurable

Note: Relays with firmware version 4 and later have a `Latched Trip` *option*

Default: Disabled

SIGNAL INPUT

Range: dependent upon the order code

Default: CT Bank 1-J1

This setting provides the selection for the current input bank. The default bank names can be changed in: ***Setpoints*** > ***System*** > ***Current Sensing*** > ***[Name]*** > ***CT Bank Name***.

PICKUP

Range: 0.020 to 30.000 x CT in steps of 0.001 x CT

Default: 1.000 x CT

DIRECTION

Range: Non-Directional, NegSeq Dir [1-4] FWD, NegSeq Dir [1-4]

Default: Non-Directional

PICKUP DELAY

Range: 0.000 to 6000.000 s in steps of 0.001 s

Default: 0.000 s

DROPOUT DELAY

Range: 0.000 to 6000.000 s in steps of 0.001 s

Default: 0.000 s

BLOCK

Range: Off, Any FlexLogic operand

Default: Off

OUTPUT RELAY X

Range: Operate, Do Not Operate

Default: Do Not Operate

EVENTS

Range: Enabled, Disabled

Default: Enabled

TARGETS

Range: Self-reset, Latched, Disabled

Default: Self-reset

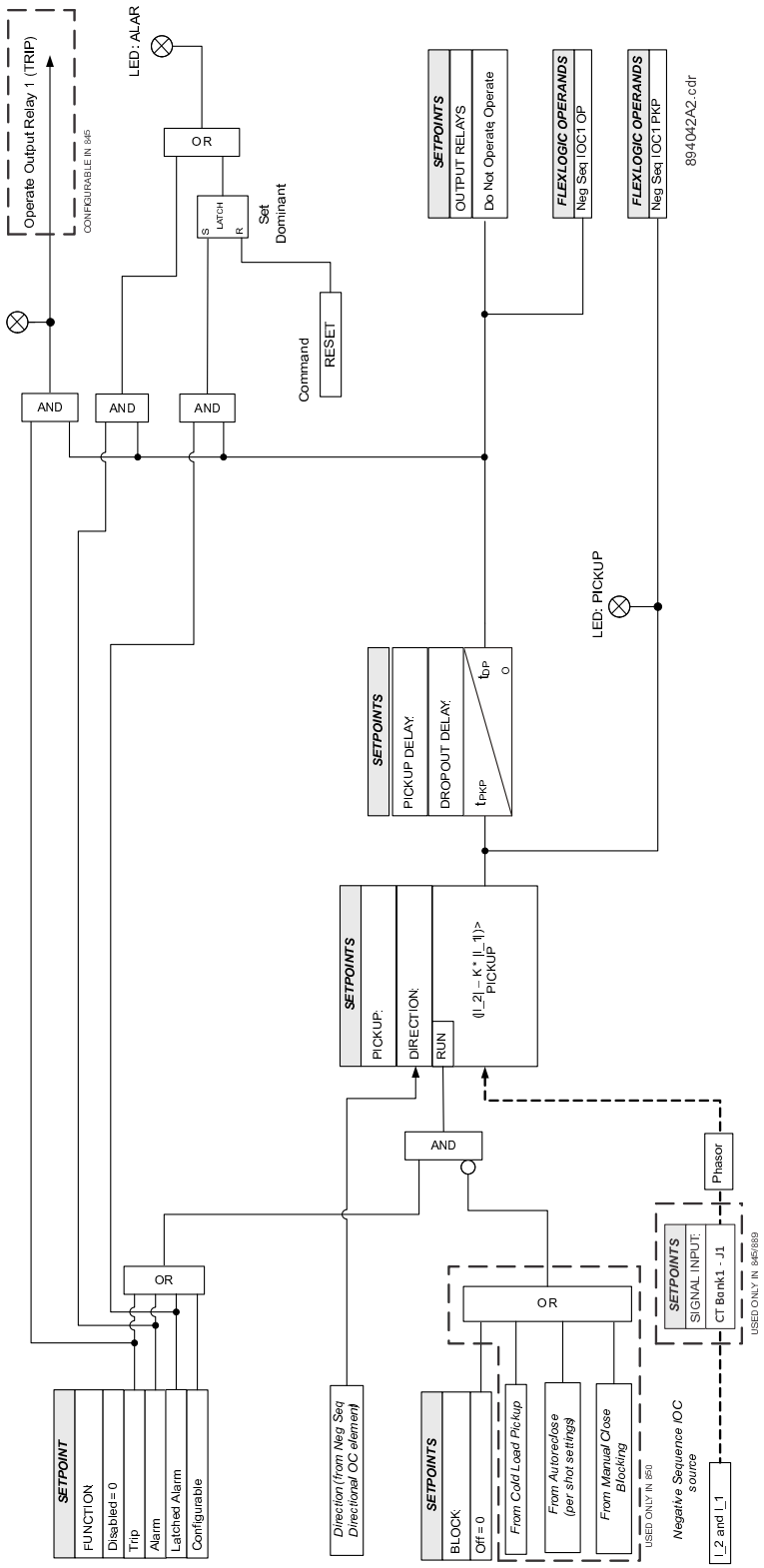

Figure 142: Negative Sequence Instantaneous Overcurrent logic diagram

8.4.16 NEGATIVE SEQUENCE DIRECTIONAL OVERCURRENT PROTECTION (67_2)

The relay is equipped with the Negative Sequence Directional Overcurrent protection element. The element provides both forward and reverse fault direction indications through its output operands Neg Seq Dir OC FWD and Neg Seq Dir OC REV, respectively. The output operand is asserted if the magnitude of the operating current is above a Pickup level (overcurrent unit) and the fault direction is seen as forward or reverse, respectively (directional unit). The overcurrent unit of the element essentially responds to the magnitude of a fundamental frequency phasor of the negative sequence phase current. A positive sequence restraint is applied for better performance: a small user-programmable portion of the positive sequence current magnitude is subtracted from the negative sequence current magnitude when forming the element operating quantity:

$$Iop = |I_2| - K * |I_1|$$

The positive sequence restraint allows for more sensitive settings by counterbalancing spurious negative sequence currents resulting from:

- system unbalances under heavy load conditions
- current transformer (CT) transformation errors
- fault inception and switch-off transients.

The operating quantity depends on the way the test currents are injected into the relay. For single phase injection:

$$I_{op} = 1/3 * (1 - K) \times I_{injected} \text{ for I_2 mode}$$

The directional unit uses the negative sequence current (I_2) and negative-sequence voltage (V_2).

The following tables define the Negative Sequence Directional Overcurrent element.

Negative Sequence Directional Overcurrent Unit

Mode	Operating Current
Negative-Sequence	Iop = |I_2| - K x |I_1|

Negative Sequence Directional Unit

Direction	Compared Phasors	
Forward	-V_2	I_2 x 1∠ECA
Reverse	-V_2	-(I_2 x 1∠ECA)

The negative sequence voltage must be greater than 0.02 x VT to be validated for use as a polarizing signal. If the polarizing signal is not validated, neither forward nor reverse indication is given. The figure below explains the usage of the voltage polarized directional unit of the element by showing the phase angle comparator characteristics for a phase A to ground fault, with settings of:

- ECA = 75° (element characteristic angle = centerline of operating characteristic)
- FWD LA = 80° (forward limit angle = ± the angular limit with the ECA for operation)
- REV LA = 80° (reverse limit angle = ± the angular limit with the ECA for operation)

The element incorporates a current reversal logic: if the reverse direction is indicated for at least 1.25 of a power system cycle, the prospective forward indication is delayed by 1.5 of a power system cycle. The element is designed to emulate an electromechanical directional device. Larger operating and polarizing signals result in faster directional discrimination bringing more security to the element operation.

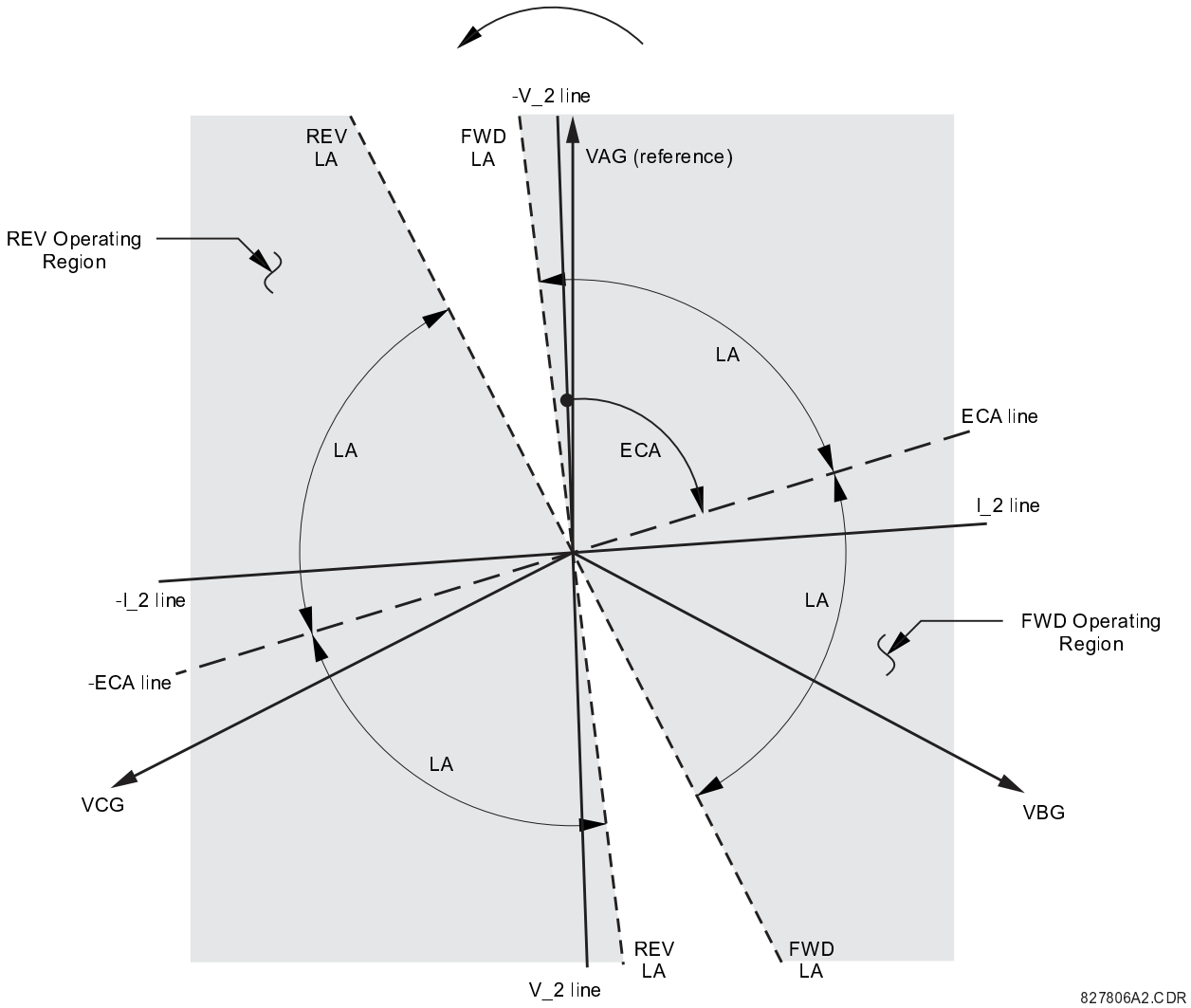

Figure 143: Negative Sequence Directional Characteristic

The forward-looking function is designed to be more secure compared to the reverse-looking function, and should therefore be used for the tripping direction. The reverse-looking function is designed to be faster compared to the forward-looking function and should be used for the blocking direction. This allows better protection coordination. The above bias should be taken into account when using the Negative Sequence Directional Overcurrent element to directionalize other protection elements.

For dual feeder applications, when the signal input is from CT Bank 1 – J1, VT Bank 1 -J2 is used as the polarizing voltage source. Similarly, when the signal input is from CT Bank 2 – K1, VT Bank 2 – K2 is used as the polarizing voltage source.

Path: ***Setpoints*** > ***Protection*** > ***Group 1(6)*** > ***Current*** > ***Negative Sequence Dir OC 1(X)***

FUNCTION

Range: Disabled, Enabled

Default: Disabled

SIGNAL INPUT

Range: dependent upon the order code

Default: CT Bank 1 -J1

This setting provides a selection for the CT Bank input.

POS-SEQ RESTRAINT

Range: 0.000 to 0.500 in steps of 0.001

Default: 0.063

The setting controls the positive-sequence restraint. Set to 0.125. Set to zero to remove the restraint. Set higher if large system unbalances or poor CT performance are expected.

FORWARD ECA

Range: 0 to -90° in steps of 1°

Default: -75°

The setting selects the element characteristic angle (ECA) for the forward direction. The element characteristic angle in the reverse direction is the angle set for the forward direction shifted by 180°.

FORWARD LIMIT ANGLE

Range: 40 to 90° in steps of 1°

Default: 90° lag

The setting defines a symmetrical (in both directions from the ECA) limit angle for the forward direction.

FORWARD PICKUP

Range: 0.020 to 30.000 x CT in steps of 0.001 x CT

Default: 0.050 x CT

The setting defines the Pickup level for the overcurrent unit in the forward direction. When selecting this setting it must be kept in mind that the design uses a positive-sequence restraint technique.

REVERSE LIMIT ANGLE

Range: 40 to 90° in steps of 1°

Default: 90° lag

The setting defines a symmetrical (in both directions from the ECA) limit angle for the reverse direction.

REVERSE PICKUP

Range: 0.020 to 30.000 x CT in steps of 0.001 x CT

Default: 0.050 x CT

The setting defines the Pickup level for the overcurrent unit in the reverse direction. When selecting the setting it must be kept in mind that the design uses a positive-sequence restraint technique.

BLOCK

Range: Off, Any FlexLogic operand

Default: Off

EVENTS

Range: Enabled, Disabled

Default: Enabled

TARGETS

Range: Self-reset, Latched, Disabled

Default: Self-reset

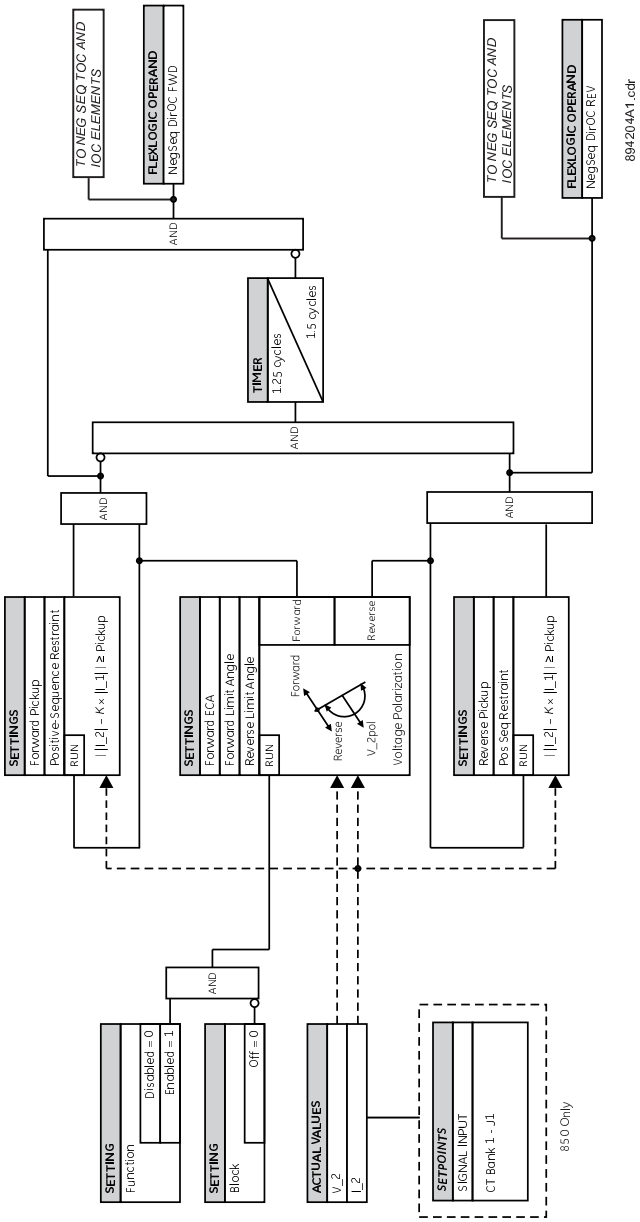

Figure 144: Negative Sequence Directional Overcurrent Protection logic diagram

8.4.17 SWITCH ON TO FAULT (SOTF)

Switch on to Fault protection (SOTF) is provided for high speed clearance of any detected fault immediately following manual closure or closure after a long open time of the circuit breaker. Without SOTF, there is a risk that if the breaker is closed onto close-in three-phase fault, the measured voltages may be too small for the impedance zones or the directional overcurrent stages to operate reliably.

Note:
SOTF 1 (2 or 3) are associated with Breaker 1. The SOTF logic uses breaker status from BKR1. SOTF 4 (5 or 6) are associated with Breaker 2. The SOTF logic uses breaker status from BKR2. The CT Input and VT Input settings should be configured to match their respective breakers.

Path: ***Setpoints*** > ***Protection*** > ***Group 1(6)*** > ***Current*** > ***SOTF 1(X)***

FUNCTION

Range: Disabled, Trip, Alarm, Latched Alarm, Configurable

Note: Relays with firmware version 4 and later have a `Latched Trip` *option*

Default: Disabled

VT INPUT

Range: Ph VT Bnk1-J2

Default: Ph VT Bnk1-J2

CT INPUT

Range: CT Bank 1-J1

Default: CT Bank 1 -J1

DEAD LINE MAX VOLTAGE

Range: 0.05 to 1.00 x VT in steps of 0.01

Default: 0.20 x VT

This setting sets the dead line voltage threshold. Voltage above this setting is not considered for the dead line condition. To be in a dead line condition all phases must be below this threshold.

DEAD LINE MAX CURRENT

Range: 0.05 to 1.00 x CT in steps of 0.01

Default: 0.05 x CT

This setting defines the dead line current threshold. Currents above this setting value are not considered to be in dead line condition. To be in dead line condition all phases have to be below this threshold.

DEAD LINE PICKUP DELAY

Range: 0.000 to 6000.000 s in steps of 0.001

Default: 10.000 s

This setting defines the dead line pickup delay. Once in dead line condition for current AND voltage, the dead line signal will be set after this delay if conditions are still true. This value should be longer than the longest autoreclose shot time.

SOTF MAX VOLTAGE

Range: 0.05 to 3.00 x VT in steps of 0.01

Default: 0.50 x VT

This setting defines the SOTF maximum voltage threshold. Above this setting the element is not in SOTF condition. To be in SOTF condition, the same phase for current and voltage have to be in SOTF condition.

> *Note:*
> *VTs should be connected to the line side and not the bus side for detection by voltage and currents.*

SOTF CURRENT PICKUP

Range: 0.05 to 10.00 x CT in steps of 0.01

Default: 2.00 x CT

This setting defines the SOTF current pickup threshold. Below this setting the element is not in SOTF condition. To be in SOTF condition, the same phase for current and voltage have to be in SOTF condition.

SOTF DETECTION WINDOW

Range: 0.000 to 6000.000 s in steps of 0.001

Default: 0.500 s

This setting defines this time window where SOTF detection is active after a circuit breaker closure.

EXTERNAL SOTF TRIGGER

Range: Off, Any FlexLogic operand

Default: Off

SOTF can be detected by this logic or by an external logic or device. This setting defines the external signal that can also detect the SOTF condition.

PICKUP DELAY

Range: 0.000 to 6000.000 s in steps of 0.001

Default: 0.000 s

This setting defines a potential delay before trip when SOTF is detected.

> *Note:*
> *The current pickup and the pickup delay settings must be defined according to the potential starting inrush currents and the inrush time upon breaker closure.*

BLOCK

Range: Off, Any FlexLogic operand

Default: Off

OUTPUT RELAY X

Range: Operate, Do Not Operate

Default: Do Not Operate

EVENTS

Range: Disabled, Enabled

Default: Enabled

TARGETS

Range: Disabled, Self-Reset, Latched

Default: Latched

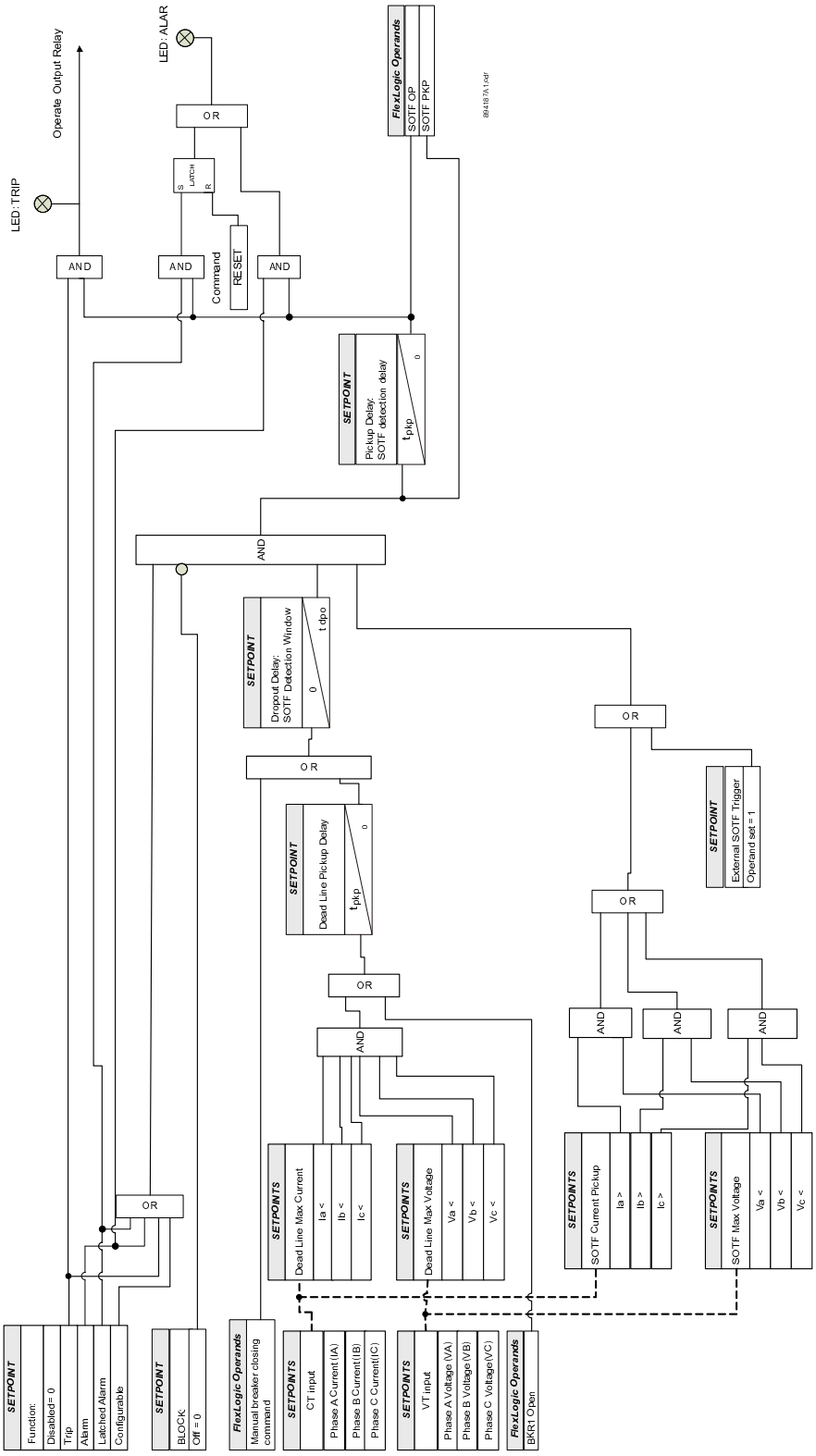

Figure 145: SOTF 1 - Logic Diagram

8.4.18 BROKEN CONDUCTOR

The Broken Conductor detection function detects a line broken conductor condition or a single-pole breaker malfunction condition through checking the phase current input phasors and the I_2 / I_1 ratio. In normal and

balanced load situations this ratio is zero, while in severe load fault conditions an unbalance is produced and this ratio increases. The intention of this function is to detect a single-phase broken conductor only. As such two-phase or three-phase broken conductors cannot be detected.

To distinguish between single-phase disappearance and system disturbance in all three phases (such as load change, switching, etc.), the broken conductor element monitors the change in all three phase currents at the present instance and at four cycles previous. It also monitors changes in the I_2 / I_1 ratio, I_1 minimum, and I_1 maximum.

The broken conductor function is not to be used to respond to fault transients and single-pole tripping/reclosing conditions. The time delay is programmed to a sufficient length to ensure coordination with the breaker dead time of the recloser function.

The broken conductor Pickup flag is asserted, when the I_2 / I_1 ratio of the current bank is above the PKP value, the positive current is in a range of nominal, and phase current changes. The broken conductor Trip flag is asserted if the element stays picked up for the time defined by the Pickup time delay. The element instantaneously drops from Pickup without operation, if the I_2 / I_1 ratio decreases to 97% to 98% of the Pickup value, before the time for operation is reached.

Path: ***Setpoints*** > ***Protection*** > ***Group 1(6)*** > ***Current*** > ***Broken Conductor 1(X)***

FUNCTION

Range: Disabled, Trip, Alarm, Latched Alarm, Configurable

Note: Relays with firmware version 4 and later have a `Latched Trip` *option*

Default: Disabled

SIGNAL INPUT

Range: dependent upon the order code

Default: CT Bank 1 -J1

This setting provides the selection for the current bank input.

I_2/I_1 RATIO

Range: 10.0% to 100.0% in steps of 0.1%

Default: 20.0%

The setting specifies the ratio of negative-sequence current to positive-sequence current. When one phase conductor is broken, the I_2 / I_1 ratio with balanced remaining two phases is 50%. So normally the setting should be set below 50% (for example, to 30%).

I_1 MIN

Range: 0.05 to 1.00 x CT in steps of 0.01 x CT

Default: 0.10 x CT

The setting specifies the minimum positive-sequence current supervision level. Ensure the setting is programmed to a level sufficient to prevent I_2 / I_1 from erratic pickup due to a low I_1 signal. However, the setting is not to be set too high since the broken conductor condition cannot be detected under light load conditions when I_1 is less than the value specified by this setting.

I_1 MAX

Range: 0.05 to 5.00 x CT in steps of 0.01 x CT

Default: 1.50 x CT

The setting specifies the maximum I_1 level allowed for the broken conductor function to operate. When I_1 exceeds this setting, it is considered a fault. This broken conductor function should not respond to any fault conditions so normally the setting is programmed to less than the maximum load current.

PICKUP DELAY

Range: 0.000 to 6000.000 s in steps of 0.001 s

Default: 20.000 s

BLOCK

Range: Off, Any FlexLogic operand

Default: Off

OUTPUT RELAY X

Range: Operate, Do Not Operate

Default: Do Not Operate

EVENTS

Range: Enabled, Disabled

Default: Enabled

TARGETS

Range: Self-reset, Latched, Disabled

Default: Self-reset

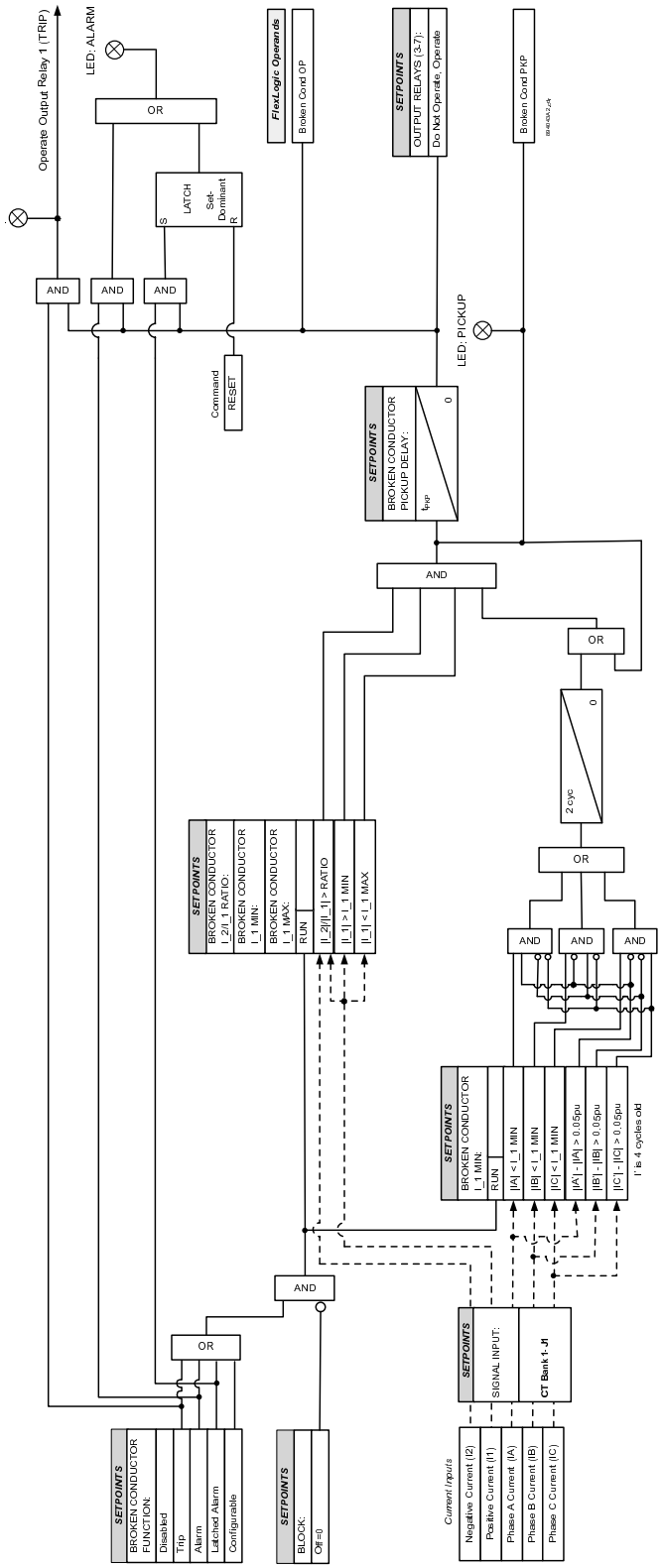

Figure 146: Broken Conductor Protection logic diagram

8.4.19 UNDERCURRENT (37)

The Undercurrent element responds to a per-phase current. An alarm will occur if the magnitude of any phase current falls below the undercurrent alarm pickup level for the time specified by the undercurrent alarm delay.

Furthermore, a trip will occur if the magnitude of any phase current falls below the undercurrent trip pickup level for the time specified by the undercurrent trip delay. The alarm and trip pickup levels should be set lower than the lowest feeder loading during normal operations.

Undercurrent requires a breaker `close` status to activate the element. In addition, the Undercurrent element can be blocked upon the closing of the feeder breaker for a period of time defined by the setting ***START BLOCK DELAY***. This block may be used in applications when the load requires time to build up to a certain operating level before the undercurrent element trips or alarms.

> *Note:*
> *Breaker has to be configured as Breaker 1 (programmed under **Setpoints** > **System** > **Breaker 1**) to monitor the breaker close status.*

Path:*Setpoints* > *Protection* > *Group 1* > *Current* > *Undercurrent 1(X)*

TRIP FUNCTION

Range: Disabled, Trip, Configurable

Default: Disabled

This setting enables the Undercurrent Trip functionality.

SIGNAL INPUT

Range: dependent upon the order code

Default: CT Bank 1-J1

This setting provides the CT Bank input for the Undercurrent element.

START BLOCK DELAY

Range: 0.00 to 600.00 s in steps of 0.01 s

Default: 0.50 s

The Undercurrent element remains blocked when the breaker closes for a period of time defined by this setting. The ***START BLOCK DELAY*** setting allows the connected load to build-up to a certain level before the undercurrent element trips or alarms.

TRIP PICKUP

Range: 0.05 to 0.95 x CT in steps of 0.01 x CT

Default: 0.60 x CT

This setting specifies a pickup threshold for the trip function.

TRIP PICKUP DELAY

Range: 0.00 to 180.00 s in steps of 0.01 s

Default: 1.00 s

This setting specifies a time delay for the trip function.

TRIP DROPOUT DELAY

Range: 0.00 to 180.00 s in steps of 0.01 s

Default: 1.00 s

This setting specifies a specifies a time delay to reset the trip command. This delay should be set long enough to allow the breaker or contactor to disconnect the feeder.

TRIP OUTPUT RELAY X

Range: Operate, Do Not Operate

Default: Do Not Operate

ALARM FUNCTION

Range: Disabled, Alarm, Latched Alarm

Default: Disabled

This setting enables the Undercurrent Alarm functionality.

ALARM PICKUP

Range: 0.10 to 0.95 x CT in steps of 0.01 x CT

Default: 0.70 x CT

This setting specifies a pickup threshold for the alarm function.

ALARM PICKUP DELAY

Range: 0.00 to 180.00 s in steps of 0.01 s

Default: 1.00 s

This setting specifies a time delay for the alarm function.

ALARM DROPOUT DELAY

Range: 0.00 to 180.00 s in steps of 0.01 s

Default: 1.00 s

This setting specifies a time delay to reset the alarm command.

ALARM OUTPUT RELAY X

Range: Operate, Do Not Operate

Default: Do Not Operate

BLOCK

Range: Off, Any FlexLogic operand

Default: Off

The Undercurrent can be blocked by any asserted FlexLogic operand.

EVENTS

Range: Disabled, Enabled

Default: Enabled

TARGETS

Range: Disabled, Self-reset, Latched

Default: Latched

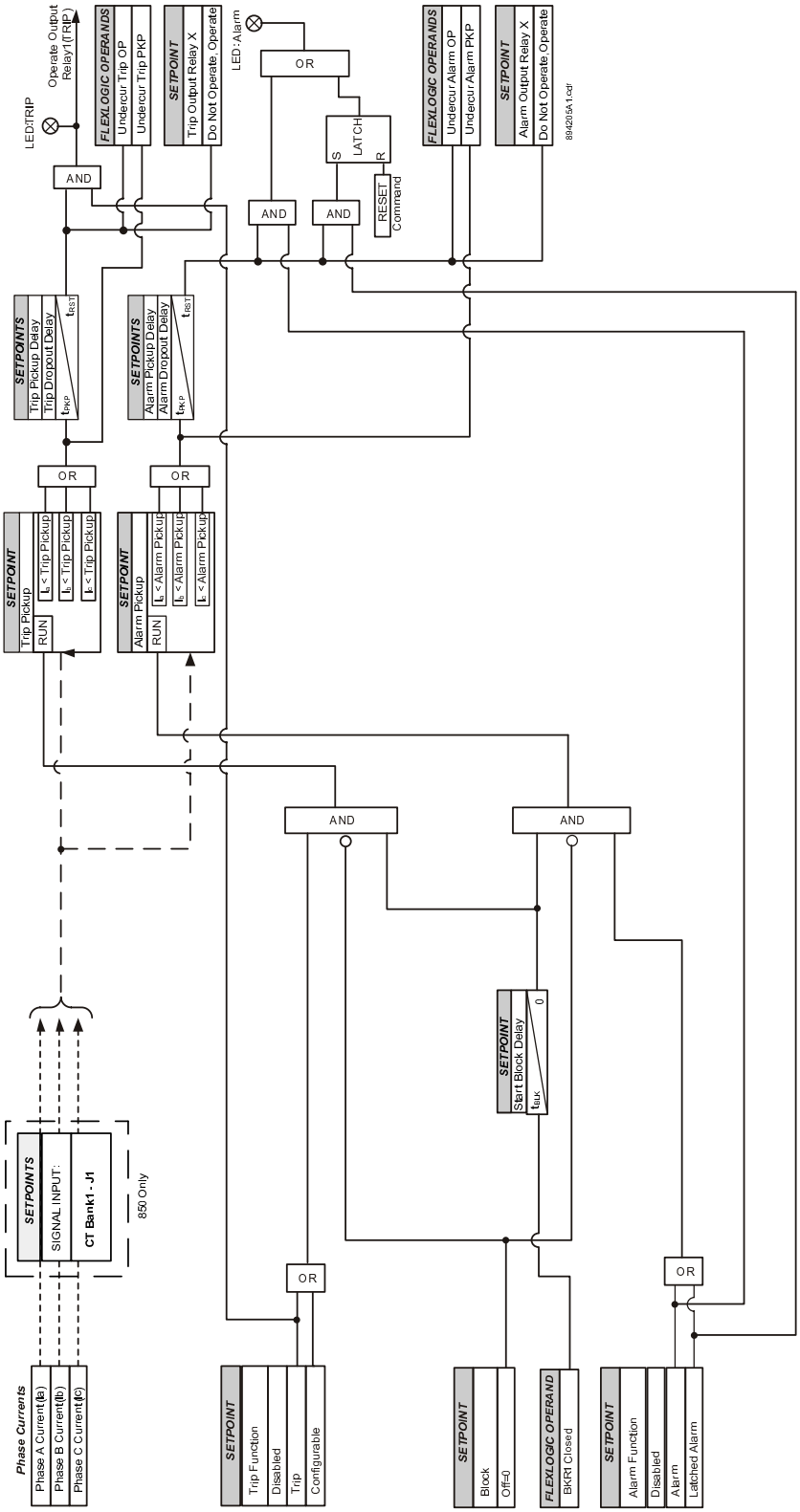

Figure 147: Undercurrent logic diagram

8.4.20 THERMAL OVERLOAD (49)

The thermal overload protection (Thermal Model) can be applied to prevent damage to the protected cables, dry transformers, capacitor banks, or even overhead lines. Loads exceeding the load ratings of the protected equipment

can, over time, degrade the insulation, and may, in return, lead to short circuit conditions. As the heating of plant equipment such as cables or transformers is resistive (I^2R), the generated heat is directly proportional to the square of the flowing current (I^2). The relay uses a thermal time characteristic based on current squared and integrated over time.

The relay will continuously calculate the thermal capacity as a percentage of the total thermal capacity. The thermal capacity is calculated as follows:

$$\theta(t) = \theta(t-1) + \frac{\Delta t}{\tau}\left(\left(\frac{I_{phase}}{I_{pickup}}\right)^2 - \theta(t-1)\right)$$

Where:

- θ (*t*) = Cable thermal capacity (%) at time *t*
- θ (*t*-1) = Cable thermal capacity (%) at time *t*-1
- Δ*t*/τ = Time step Δ*t* divided by the heating or cooling time constant τ
- τ = Heating and cooling time constant, usually provided by the manufacturer
- *Iphase/Ipickup* = Ratio between the actual load current and the pickup setting.

The heating time constant is used when the squared load/Pickup ratio is greater than the thermal capacity θ(t-1) estimated in the previous time step. Otherwise the formula uses the cooling time constant.

When the load current exceeds the PKP setting, and the element picks up. At the same time the thermal capacity will start to increase at a rate depending on the current amplitude, the prior loading condition of the cable and heating time constant. When the thermal capacity exceeds the alarm level, the element will generate an alarm signal that may turn on a programmable LED. The thermal model alarm can be used as a warning for the start of dangerous overloading conditions, and can prevent unnecessary tripping. When the thermal capacity exceeds the Trip level (i.e., higher than 100% thermal capacity), the element will generate a Trip signal. The Trip flag will drop out when the Thermal capacity falls below 97%.

Path: ***Setpoints*** > ***Protection*** > ***Group 1(6)*** > ***Current*** > ***Thermal Overload 1(X)***

FUNCTION

Range: Disabled, Trip, Alarm, Latched Alarm, Configurable

Default: Disabled

This class of setpoint is described in the Common Setpoints section located at the beginning of the Setpoints chapter.

SIGNAL INPUT

Range: dependent upon the order code

Default: CT Bank 1 –J1

This setting provides selection for the current bank input.

PICKUP

Range: 0.050 to 30.000 x CT in steps of 0.001 x CT

Default: 1.000 x CT

This setting sets the Pickup level of the phase current.

In some applications, it may be necessary to apply the K-factor to compensate for any current measurement inaccuracies from the relay. The relay has the following accuracy for RMS values in current:

± 0.25% of reading or ± 0.2% of rated (whichever is greater) from 0.1 to 2.0 x CT ± 1% of reading > 2.0 x CT

A K-factor in the range between 1 to 1.2 is sufficient. The pickup level needs to be calculated based on the K-factor and the base current, Ib (permissible current for the equipment to be thermally protected). The time to trip is estimated when the square of the ratio between the actual flowing current and the programmed pickup current is higher than 1 (i.e. 100%). The pickup is calculated as follows:

$$Ipickup = K * Ibase$$

where

- I_{pickup} is the pickup current (xCT) setting.
- K is a factor reflecting the relay current measurement error.
- I_{base} is the permissible current of the equipment to be thermally protected (in many cases this is the maximum continuous current for the equipment within its thermal limits)

ALARM

Range: 70.0 to 110.0% in steps of 0.1%

Default: 80.0%

The setting sets the Alarm level for the accumulated thermal capacity above which the element generates an alarm. The Alarm signal can be displayed by the user-programmable LED.

HEAT TIME CONSTANT (τ_H)

Range: 3.0 to 600.0 min in steps of 0.1 min

Default: 6.0 min

The time constant is used to compute the thermal capacity when the squared load/Pickup ratio at each time step is greater than the thermal capacity computed in the previous time step.

COOL TIME CONSTANT (τ_C)

Range: 1.00 to 6.00 x τH in steps of 0.01 x τH

Default: 6.0 min

The time constant is used to compute the thermal capacity when the squared load/Pickup ratio at each time step is less than the thermal capacity computed in the previous time step.

BLOCK

Range: Off, Any FlexLogic operand

Default: Off

The element is blocked when the operand is asserted.

OUTPUT RELAY X

Range: Operate, Do Not Operate

Default: Do Not Operate

Each relay can be selected to become either energized or de-energized when operated, and to operate as latched, self-resetting or pulsed.

EVENTS

Range: Enabled, Disabled

Default: Enabled

The selection of the Enabled setting enables the events of the function.

TARGETS

Range: Self-Reset, Latched, Disabled

Default: Self-Reset

The setting is used to define the operation of an element target message. When disabled, no target message is issued upon operation of the element. When set to `Self-Reset`, the target message and LED indication follow the operate state of the element, and self-resets once the operate element condition clears. When set to `Latched`, the target message will remain visible after the element output returns to logic 0 until a RESET command is received by the relay.

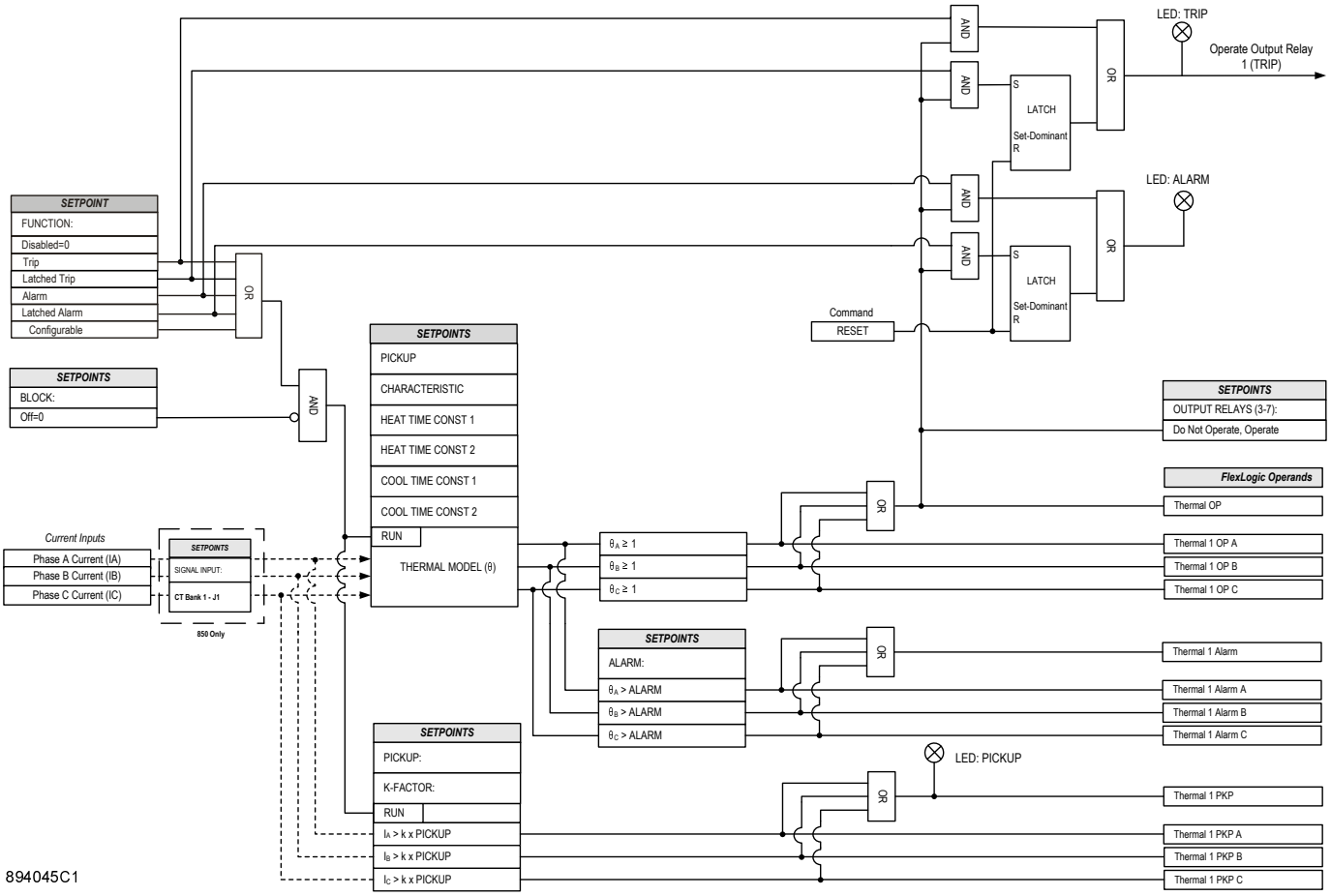

Figure 148: Thermal Overload 1 Protection logic diagram

8.5 VOLTAGE ELEMENTS OVERVIEW

The 889 generator protection relay provides the following voltage protection elements:

- Phase reversal
- Undervoltage curves (UV Curves)
- Phase undervoltage (Phase UV)
- Auxiliary undervoltage (Auxiliary UV)
- Phase overvoltage (Phase OV)
- Auxiliary overvoltage 1 (Auxiliary OV1)
- Auxiliary overvoltage 2 (Auxiliary OV2)
- Neutral overvoltage (Neutral OV)
- Negative sequence overvoltage (Neg Seq OV)
- Volts per Herz 1
- Volts per Herz 2

8.5.1 UNDERVOLTAGE CURVES

The undervoltage elements can be programmed to have an inverse time delay characteristic. The undervoltage delay setpoint defines a family of curves as shown below.

The operating time is given by:

$$T = D/(1 - V/Vpkp)$$

Where:

- T = Operating Time
- D = Undervoltage ***PICKUP DELAY*** setpoint (for D = 0.00 operates instantaneously)
- V = Voltage as a fraction of the nominal VT Secondary Voltage
- V_{pkp} = Undervoltage Pickup Level

The element resets instantaneously if the applied voltage exceeds the dropout voltage. The delay setting selects the minimum operating time of the phase undervoltage.

> *Note:*
> *At 0% of Pickup, the operating time equals the Undervoltage **PICKUP TIME DELAY** setpoint.*

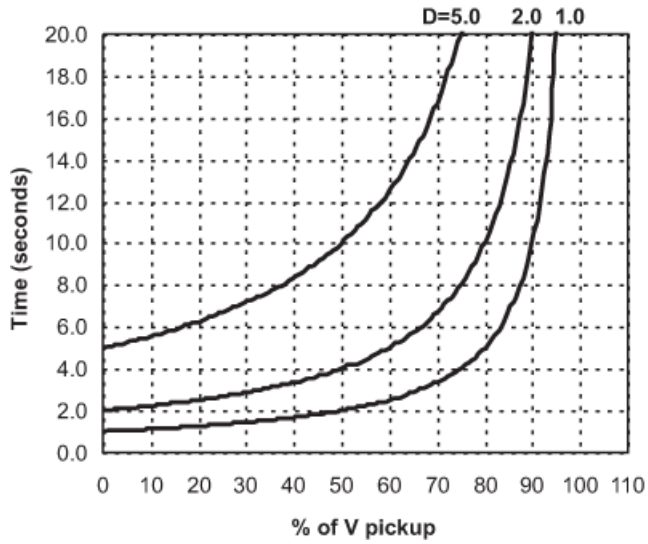

Figure 149: Inverse Time Undervoltage Curves

If FlexCurves are selected, the operating time determined based on following equation:

$$T = \text{FlexCurve}\ (Vpkp / V)$$

> *Note:*
> *FlexCurve reverses the ratio of voltages. The ratio of set pickup value to the measured voltage.*

Example: For a Pickup set to 0.9 x VT, when the measured voltage is 0.82 x VT, the ratio would be 0.9/0.8 = 1.1, therefore in the FlexCurve, the corresponding Trip time setting entry is at 1.1 x PKP (not at 0.82 x PKP). On the other hand, when the measured voltage is 1 x VT, the ratio is 0.9/1 = 0.9, therefore, in the FlexCurve, the corresponding Reset time entry is at 0.9 x PKP.

8.5.2 PHASE REVERSAL (47)

The relay can detect the phase rotation of the three phase voltages. When all three Phase-to-Phase Voltages (Vab, Vbc and Vca) are greater than 50% of VT, if the phase rotation of the three phase voltages is not the same as the Phase Rotation or Reverse Phase Rotation (under ***Setpoints*** > ***System*** > ***Power System***), and there is no fuse failure, either an alarm or a trip will occur within the programmed ***PICKUP DELAY*** time.

> *Note:*
> *VT is the secondary voltage programmed under **Setpoints** > **System** > **Voltage Sensing** > **Phase VT Secondary**.*

Path:*Setpoints* > ***Protection*** > ***Group 1(6)*** > ***Voltage*** > ***Phase Reversal***

FUNCTION

Range: Disabled, Trip, Alarm, Latched Alarm, Configurable

Note: Relays with firmware version 4 and later have a `Latched Trip` *option*

Default: Disabled

This setting enables the Phase Reversal functionality.

PICKUP DELAY

Range: 0.00 to 180.00 s in steps of 0.01 s

Default: 1.00 s

This setting specifies the pickup delay of the element.

DROPOUT DELAY

Range: 0.00 to 180.00 s in steps of 0.01 s

Default: 1.00 s

This setting defines the reset delay of the element.

BLOCK

Range: Any FlexLogic Operand

Default: Off

The Phase Reversal can be blocked by any asserted FlexLogic operand.

OUTPUT RELAY X

Range: Operate, Do Not Operate

Default: Do Not Operate

EVENTS

Range: Enabled, Disabled

Default: Enabled

TARGETS

Range: Self-Reset, Latched, Disabled

Default: Self-Reset

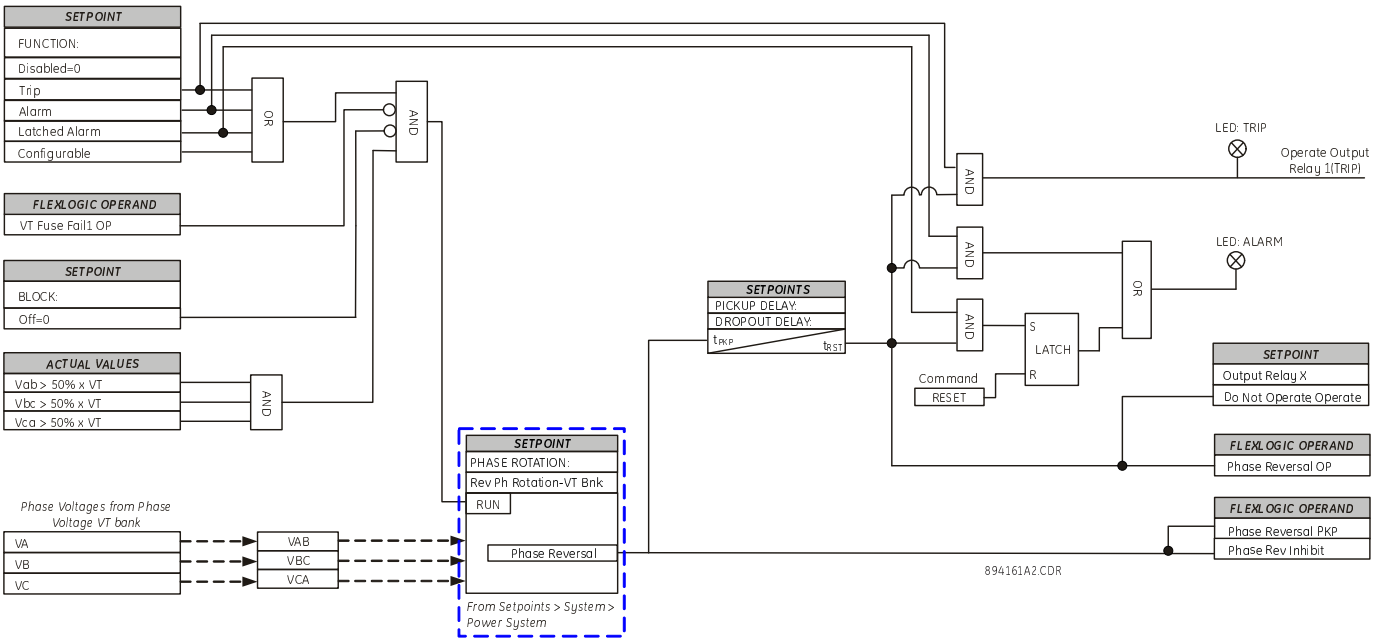

Figure 150: Phase Reversal logic diagram

8.5.3 PHASE UNDERVOLTAGE PROTECTION (27P)

The Phase Undervoltage element may be used to protect voltage sensitive loads and system components against sustained undervoltage conditions. This element may be used for permissive functions, initiation of the source transfer schemes, and similar functions.

The Phase Undervoltage element may be set as an instantaneous element with no time delay or as a time delayed element which can be configured with definite time, inverse time or FlexCurves. The Phase Undervoltage element has programmable minimum operating threshold to prevent some undesired operation when voltage is not available. The input voltages are the three phase to phase voltages from delta connected VTs (PTs) or three phase to ground voltages from wye connected VTs (PTs).

The settings of this function are applied to each of the three voltage inputs to produce Pickup and Trip flags per voltage input. The UV Pickup flag is asserted, when the measured voltage on any of the three voltage inputs is below the PKP value. The UV Trip flag is asserted if the element stays picked up for the time defined by Pickup time delay or for the time defined by the selected inverse curve / FlexCurve, and number of voltages required for operation matches the number of voltages selected in the setting. The element drops from Pickup without operation if the measured voltage rise above 102 to 103% of the Pickup value, before the time for operation is reached.

The ***MINIMUM VOLTAGE*** setting selects the operating voltage below which the element is blocked (a setting of `0` allows a dead source to be considered a fault condition).

This element may be used to give a desired time delay operating characteristic versus the applied voltage (phase to ground or phase to phase for wye VT connection, or phase to phase for delta VT connection) or as a definite time element. For the inverse time setpoint, the undervoltage delay setpoint defines a family of curves.

Path: ***Setpoints*** > ***Protection*** > ***Group 1(6)*** > ***Voltage Elements*** > ***Phase UV 1(X)***

FUNCTION

Range: Disabled, Trip, Alarm, Latched Alarm, Configurable

Note: Relays with firmware version 4 and later have a `Latched Trip` *option*

Default: Disabled

SIGNAL INPUT

Range: dependent upon the order code

Default: Ph VT Bnk1-J2 or LEA Bnk1-J2 (order code dependent)

This setting provides the selection for the voltage signal input.

MODE

Range: Phase to Ground, Phase to Phase

Default (3.xx): Phase to Ground

Default (4.10): Phase to Phase

This setting provides the selection of phase to ground and phase to phase voltages for a Wye VT connection (phase to phase for delta connected VT connection).

> *Note:*
> *Only Phase-to-Phase mode should be used when Delta/Single' VT Connection Type and Pseudo Reference Phase-to-Phase is programmed for the Phase VT Connection setting under System/Voltage Sensing.*

PICKUP

Range: 0.00 to 1.50 x VT in steps of 0.01 x VT

Default: 1.00 x VT

This setting sets the Phase Undervoltage Pickup level specified per times VT.

For example, a Pickup setting of 0.80 x VT with a 13800:115 VT translates into 11.04kV (or 92V secondary). If the mode selection is phase to phase and the Setpoints/System Setup/Voltage Sensing/Phase VT Connection selection is Wye, the previous example translates to the phase to phase voltage value of 11.04kV x 1.732 = 19.12kV.

MINIMUM VOLTAGE

Range: 0.00 to 1.50 x VT in steps of 0.01 x VT

Default: 0.20 x VT

This setting sets the minimum operating voltage for the undervoltage Pickup level specified per times VT.

For example, a PKP setting of 0.20 x VT with 13800:115 VT translates into 2.76kV (or 23V secondary).

If the Mode setting selection is Phase to Phase and the Setpoints/System Setup/Voltage Sensing/Phase VT Connection selection is Wye, the previous example translates to a

Phase to Phase voltage value of 2.76kV x 1.732 = 4.78kV.

PHASES FOR OPERATION

Range: Any One, Any Two, All Three

Default: Any One

This setting defines the number of voltages required for operation of the Phase UV protection function.

UNDERVOLTAGE CURVES

Range: Definite Time, Inverse Time, FlexCurves A/B/C/D

Default: Definite Time

This setting provides the selection of definite time delay or time delay inverse undervoltage curves, or FlexCurves. In the case of FlexCurves, the voltage ratio used is reversed. Refer to the equation and note regarding FlexCurves in the previous section .

PICKUP DELAY

Range: 0.020 to 6000.000 s in steps of 0.001 s

Default: 1.000 s

This setting provides definite time pickup delay.

BLOCK

Range: Off, Any FlexLogic operand

Default: Off

OUTPUT RELAY X

Range: Operate, Do Not Operate

Default: Do Not Operate

EVENTS

Range: Enabled, Disabled

Default: Enabled

TARGETS

Range: Disabled, Self-reset, Latched

Default: Self-reset

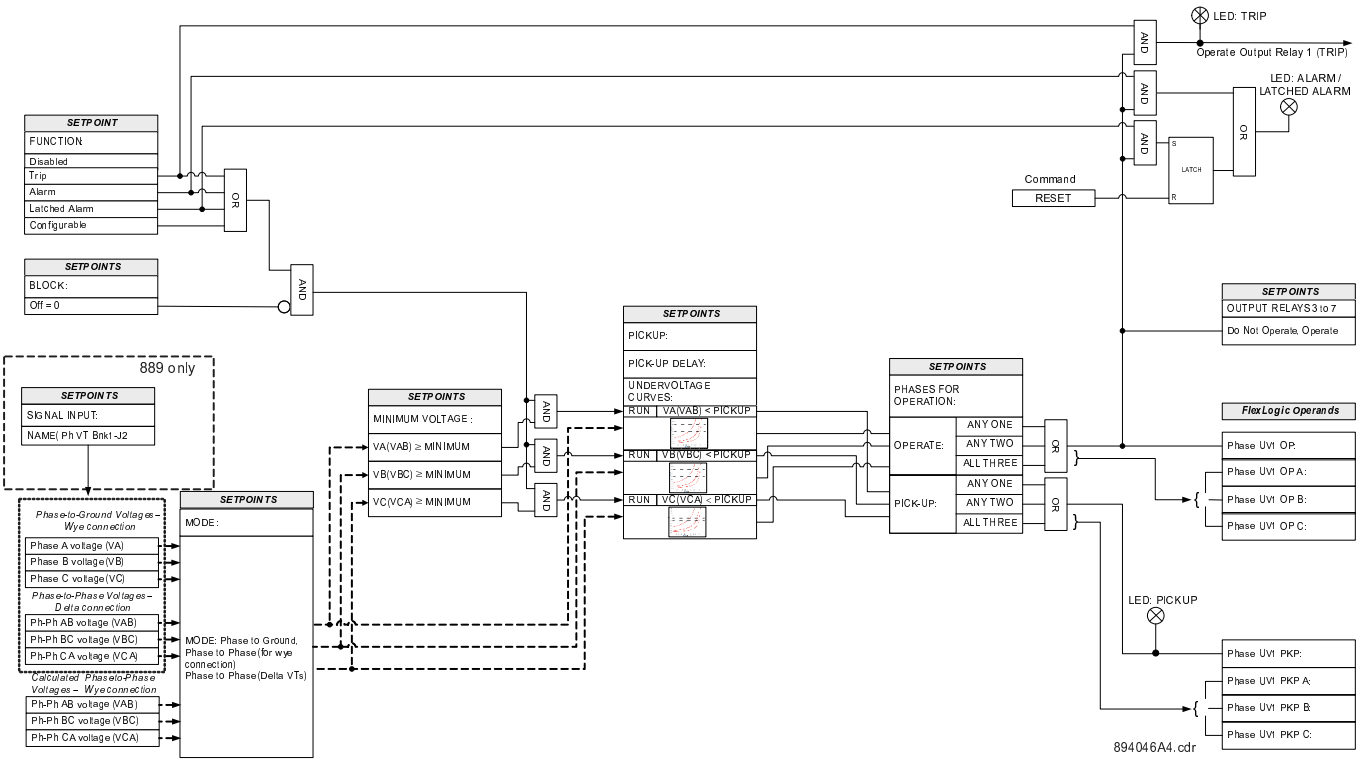

Figure 151: Phase Undervoltage Protection logic diagram

8.5.4 AUXILIARY UNDERVOLTAGE (27X)

The relay provides two identical Auxiliary Undervoltage (UV) elements per protection group, or a total of 12 elements. Each Auxiliary Undervoltage element may be used to protect voltage sensitive loads and system components against sustained undervoltage conditions. This element may be used for permissive functions, initiation of the source transfer schemes and similar functions.

The Auxiliary Undervoltage element may be set as an instantaneous element with no time delay or as a time delayed element which can be programmed with definite time, inverse time or FlexCurves. The Auxiliary Undervoltage element has a programmable minimum operating threshold to prevent undesired operation when voltage is not available. The input voltage is the auxiliary voltage.

The settings of this function are applied to auxiliary voltage input to produce Pickup and Trip flags. The Auxiliary UV Pickup flag is asserted when the auxiliary input voltage is below the PKP value. The Auxiliary UV Trip flag is asserted if the element stays picked up for the time defined by Pickup time delay or for the time defined by the selected inverse curve/FlexCurve. The element drops from Pickup without operation if the measured voltage rises above 102 to 103% of the Pickup value before the time for operation is reached.

The minimum voltage setting selects the operating voltage below which the element is blocked (a setting of `0` will allow a dead source to be considered a fault condition).

This element may be used to give a desired time-delay operating characteristic versus the applied voltage, or as a definite time element. For the inverse time setpoint, the undervoltage delay setpoint defines a family of curves.

Path: ***Setpoints*** > ***Protection*** > ***Group 1(6)*** > ***Voltage Elements*** > ***Auxiliary UV 1(X)***

FUNCTION

Range: Disabled, Trip, Alarm, Latched Alarm, Configurable

Note: Relays with firmware version 4 and later have a `Latched Trip` *option*

Default: Disabled

SIGNAL INPUT

Range: dependent upon the order code

Default: Ax VT Bnk1-J2

This setting provides the selection for the voltage signal input.

PICKUP

Range: 0.00 to 1.50 x VT in steps of 0.01 x VT

Default: 1.00 x VT

This setting sets the Auxiliary Undervoltage Pickup level specified per times VT. For example, a Pickup setting of 0.80 x VT with a 13800:115 VT translates into 11.04kV (or 92V secondary).

MINIMUM VOLTAGE

Range: 0.00 to 1.50 x VT in steps of 0.01 x VT

Default: 0.20 x VT

This setting sets the minimum operating voltage for the undervoltage Pickup level specified per times VT.

UNDERVOLTAGE CURVES

Range: Definite Time, Inverse Time, FlexCurves A/B/C/D

Default: Definite Time

This setting provides the selection of definite time delay or time delay inverse undervoltage curves. In the case of FlexCurves, the voltage ratio is reversed.

PICKUP DELAY

Range: 0.000 to 6000.000 s in steps of 0.001 s

Default: 1.000 s

If *Inverse Time* is selected as an Undervoltage Curve setpoint, the Pickup Delay value is loaded to variable D in the curve formula.

BLOCK

Range: Off, Any FlexLogic operand

Default: Off

OUTPUT RELAY X

Range: Operate, Do Not Operate

Default: Do Not Operate

EVENTS

Range: Enabled, Disabled

Default: Enabled

TARGETS

Range: Disabled, Self-reset, Latched

Default: Self-reset

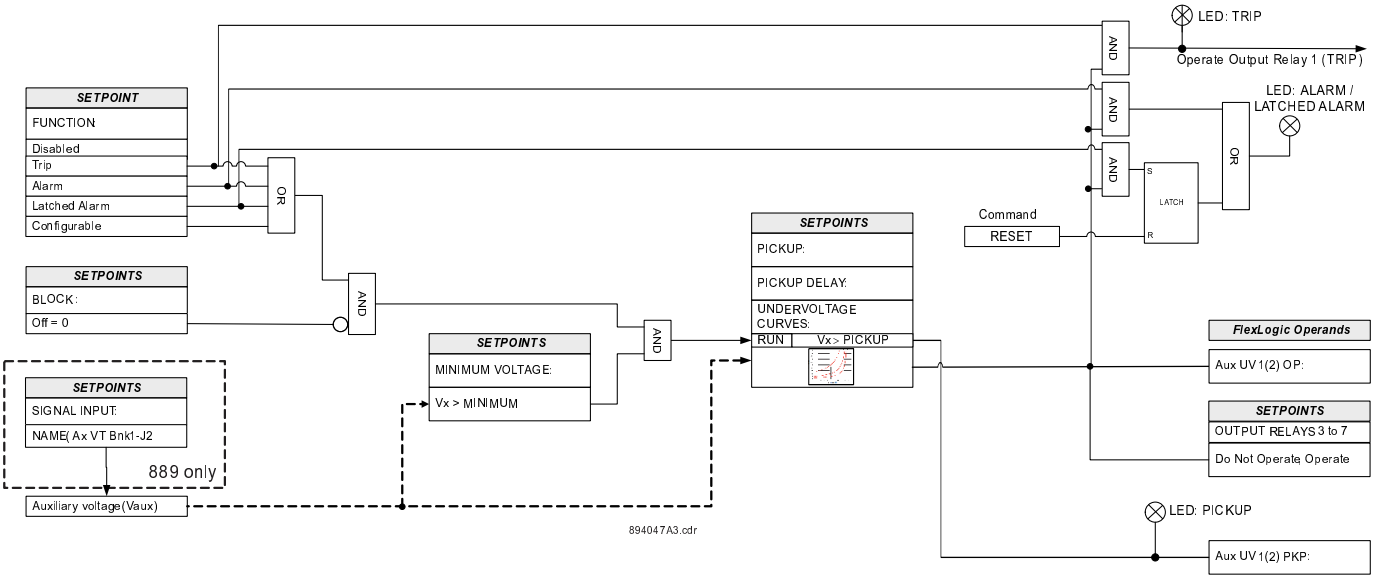

Figure 152: Auxiliary Undervoltage Protection logic diagram

8.5.5 PHASE OVERVOLTAGE PROTECTION (59P)

The relay provides two identical Phase Overvoltage (OV) elements per protection group, or a total of 12 elements. Each Phase Overvoltage element may be used to protect voltage sensitive loads and system components against sustained overvoltage conditions. The Phase Overvoltage element may be set as an instantaneous element with no time delay or may be set as a definite time element. The input voltages are the three phase to phase voltages from delta connected VTs or three phase to ground voltages from wye connected VTs.

The settings of this function are applied to each of the three voltage inputs to produce Pickup and Trip flags per voltage input. The OV Pickup flag is asserted when the voltage on any voltage input is above the PKP value. The OV Trip flag is asserted if the element stays picked up for the time defined by the Pickup time delay and that number of voltages required for operation is equal to the number defined by voltages required for the operation setting. The element drops from pickup without operation, if the measured voltage drops below the configured dropout level of the pickup value, before the time for operation is reached. The dropout level can be configured at ***Setpoints > Device > Installation > OV/UV DPO Range***.

Phase Overvoltage elements may be used to protect voltage sensitive loads and system components against sustained overvoltage conditions. The Phase Overvoltage element may be set as an instantaneous element with no time delay or may be set as a definite time element, Inverse Time, or with FlexCurve. The input voltages are the three phase to phase voltages from delta connected VTs, or the three phase to ground voltages from wye connected VTs.

This element may be used to give a desired time-delay operating characteristic versus the applied voltage or as a definite time element. For the inverse time setpoint, the overvoltage pickup delay setpoint defines a family of curves as shown below.

The operating time is given by:

$$T = D / [(V/V_{pickup})-1] \text{ when } V > V_{pickup}$$

where:

- T = trip time in seconds
- D = Overvoltage Pickup Delay setpoint
- V = actual phase-phase voltage
- V_{pickup} = Overvoltage Pickup setpoint

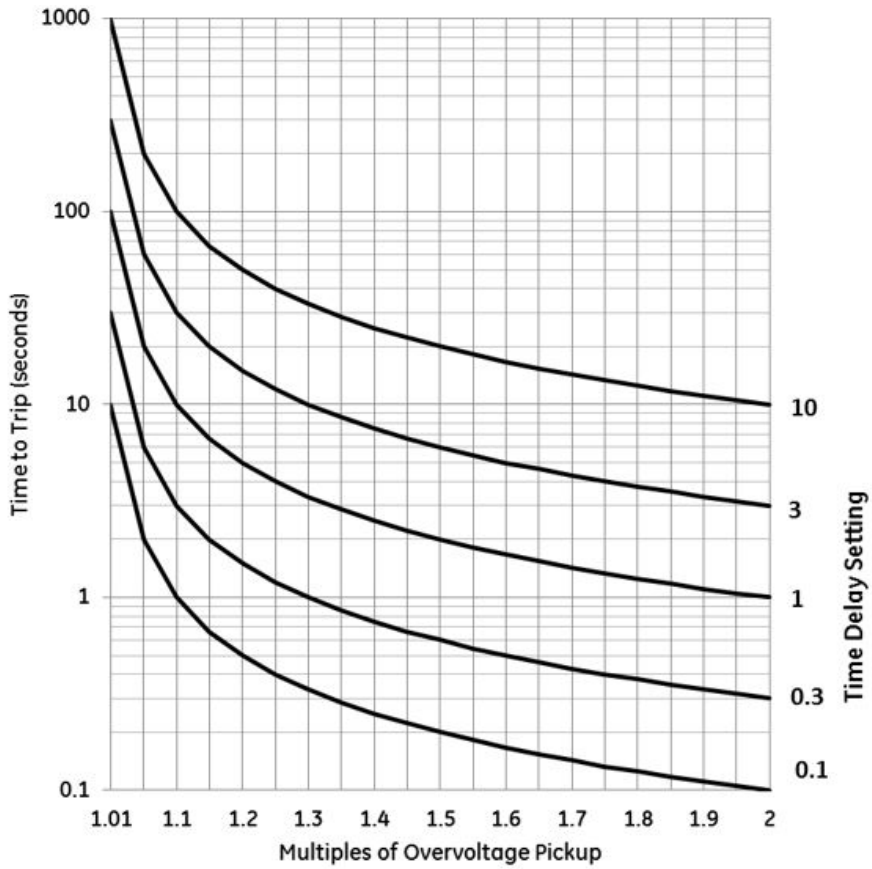

Figure 153: Overvoltage curves

Path: ***Setpoints*** > ***Protection*** > ***Group 1(6)*** > ***Voltage*** > ***Phase OV 1(X)***

FUNCTION

Range: Disabled, Trip, Alarm, Latched Alarm, Configurable

Note: Relays with firmware version 4 and later have a `Latched Trip` *option*

Default: Disabled

SIGNAL INPUT

Range: dependent upon the order code

Default: Ph VT Bnk1-J2 or LEA Bnk1-J2, dependent on order code

This setting provides the selection for the voltage signal input.

MODE

Range: Phase to Ground, Phase to Phase

Default (3.xx): Phase to Ground

Default (4.10): Phase to Phase

This setting provides the selection of phase to ground and phase to phase voltages for a Wye VT connection (phase to phase for delta connected VT connection).

> *Note:*
> *Only Phase to Phase mode should be selected when Delta/Single VT Connection Type and Pseudo Reference Phase-to-Phase is programmed for the Phase VT Connection setting under* ***Setpoints*** > ***System*** > ***Voltage Sensing****.*

PICKUP

Range: 0.02 to 3.00 x VT in steps of 0.01 x VT

Default: 1.50 x VT

The setting sets the phase overvoltage pickup level to specified per times VT.

For example, a Pickup setting of 1.10 x VT with 13800:115 VT translates into 15.18kV. If the mode selection is phase to phase and ***Setpoints*** > ***System Setup*** > ***Voltage Sensing*** > ***Phase VT Connection*** selection is Wye, the previous example translates to the phase to phase voltage value of 15.18kV x 1.732 = 26.29kV.

PHASES FOR OPERATION

Range: Any One, Any Two, All Three

Default: Any One

The setting defines the number of voltages required for operation of the Phase OV protection function.

CURVE

Range: Definite Time, Inverse Time, FlexCurve A, FlexCurve B, FlexCurve C, FlexCurve D

Default: Definite Time

This setting provides selection of curves for overvoltage as definite time, inverse time overvoltage curves or FlexCuves.

PICKUP DELAY

Range: 0.000 to 6000.000 s in steps of 0.001 s

Default: 1.000 s

This setting provides definite time pickup delay.

DROPOUT DELAY

Range: 0.000 to 6000.000 s in steps of 0.001 s

Default: 1.000 s

BLOCK

Range: Off, Any FlexLogic operand

Default: Off

OUTPUT RELAY X

Range: Operate, Do Not Operate

Default: Do Not Operate

EVENTS

Range: Enabled, Disabled

Default: Enabled

TARGETS

Range: Disabled, Self-reset, Latched

Default: Self-reset

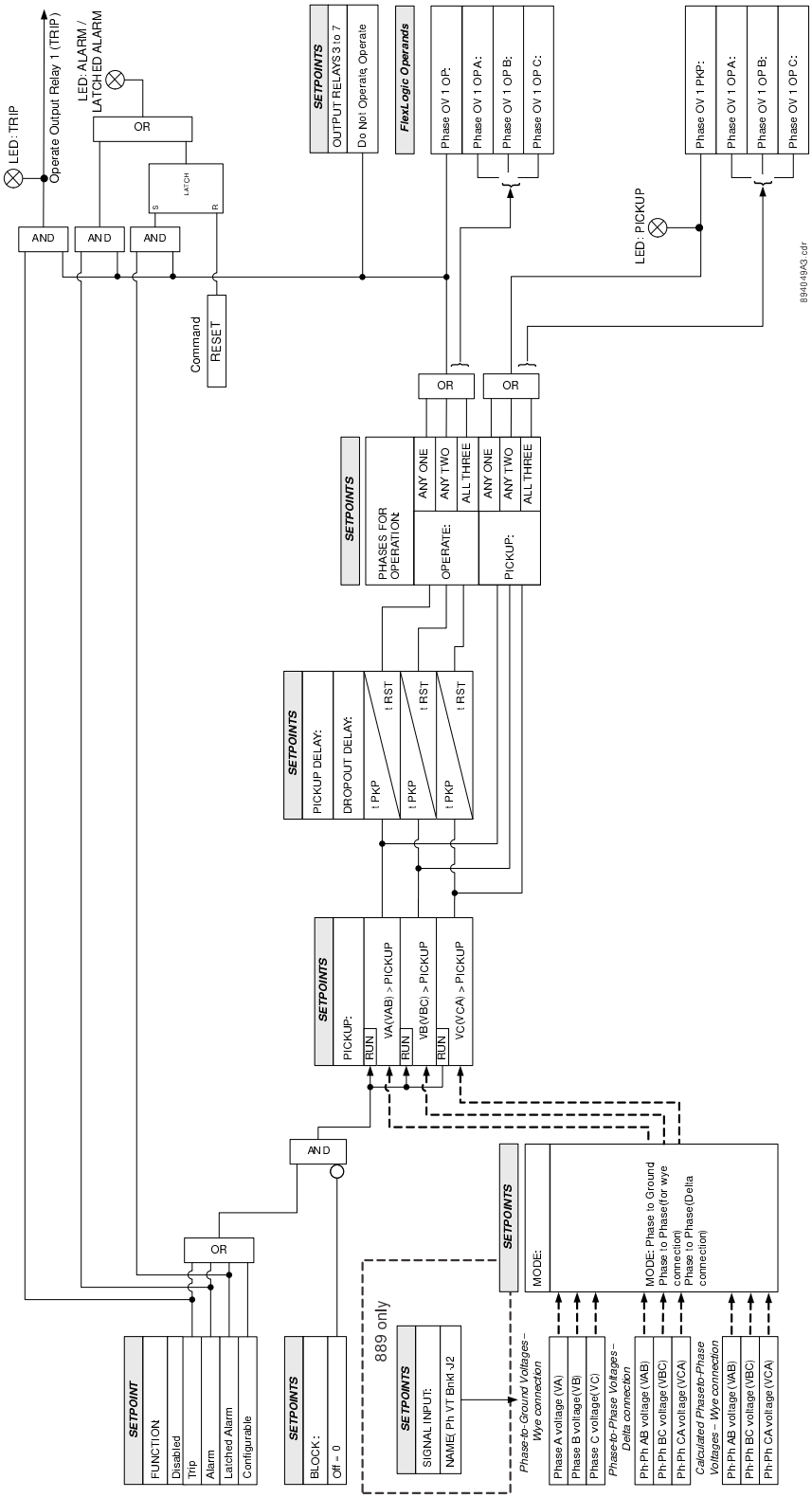

Figure 154: Phase Overvoltage logic diagram

8.5.6 AUXILIARY OVERVOLTAGE PROTECTION (59X)

The relay provides one Auxiliary Overvoltage (OV) element per protection group, or a total of 6 elements. Each Auxiliary OV element is used to protect voltage sensitive loads and system components against sustained

overvoltage conditions. This element can be used for monitoring zero-sequence voltage (from an "open corner delta" VT connection), permissive functions, the source transfer schemes, restoration and similar functions.

The Auxiliary OV element may be set as an instantaneous element with no time delay or may be set as a definite time element, Inverse Time, or with FlexCurves. The input voltage is the auxiliary voltage.

The settings of the Auxiliary OV Protection function are applied to the auxiliary voltage input to produce pickup and trip flags. The Auxiliary OV pickup flag is asserted, when the voltage on auxiliary input is above the PKP value. The Auxiliary OV trip flag is asserted if the element stays picked up for the time defined by pickup time delay, Inverse Time, or FlexCurves. The element drops from pickup without operation, if the measured voltage drops below 97-98% of the pickup value, before the time for operation is reached.

This element may be used to give a desired time-delay operating characteristic versus the applied voltage or as a definite time element. For the inverse time setpoint, the overvoltage pickup delay setpoint defines a family of curves as shown below.

The operating time is given by:

$$T = D / [(V/V_{pickup}) - 1] \text{ when } V > V_{pickup}$$

Where:

- T = trip time in seconds
- D = Overvoltage Pickup Delay setpoint
- V = actual phase-phase voltage
- V_{pickup}= Overvoltage Pickup setpoint
- The element reset rate is a linear reset time from the threshold of trip.

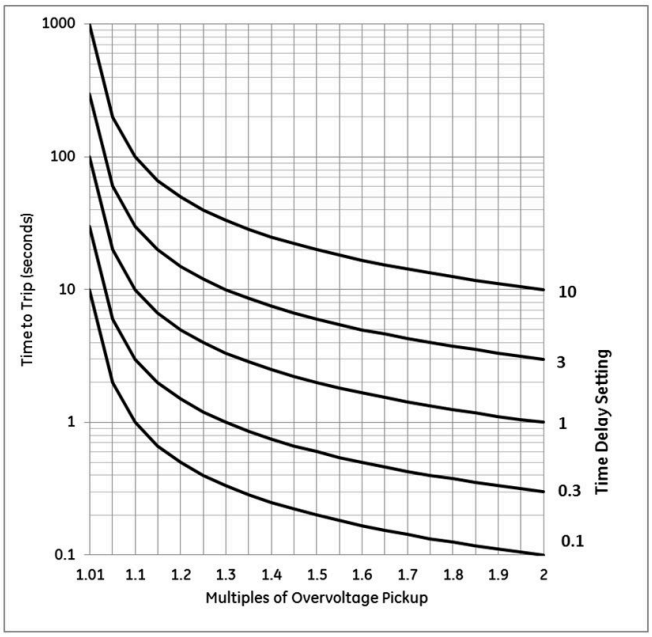

Figure 155: Overvoltage Curves

Path: ***Setpoints*** > ***Protection*** > ***Group 1(6)*** > ***Voltage*** > ***Auxiliary OV***

FUNCTION

Range: Disabled, Trip, Alarm, Latched Alarm, Configurable

Note: Relays with firmware version 4 and later have a `Latched Trip` *option*

Default: Disabled

SIGNAL INPUT

Range: Ax VT Bnk1-J2

Default: Ax VT Bnk1-J2

This setting provides the selection for the signal input.

PICKUP

Range: 0.00 to 3.00 x VT in steps of 0.01 x VT

Default: 1.50 x VT

This setting sets the auxiliary overvoltage pickup level specified per times VT.

For example, a Pickup setting of 1.10 x VT with 13800:115 VT translates into 15.08kV (or 126.5V secondary).

CURVE

Range: Definite Time, Inverse Time, FlexCurves A/B/C/D

Default: Definite Time

This setting provides the selection of curves for the overvoltage as definite time, inverse time overvoltage curves or FlexCurves.

PICKUP DELAY

Range: 0.000 - 6000.000s in steps of 0.001s

Default: 1.000s

DROPOUT DELAY

Range: 0.000 to 6000.000 s in steps of 0.001 s

Default: 1.000 s

This setting provides definite time dropout delay of the operate signal if the Curve setting is selected as Definite Time. An instantaneous reset is provided by dropout time delay setting of 0.000 s.If the selected Curve setting is Inverse Time, the dropout delay value is used to linearly reset the element. If the Curve is selected as a FlexCurve, the reset setpoints of the FlexCurve are used to reset the element.

BLOCK

Range: Off, Any FlexLogic operand

Default: Off

OUTPUT RELAY X

Range: Operate, Do Not Operate

Default: Do Not Operate

EVENTS

Range: Enabled, Disabled

Default: Enabled

TARGETS

Range: Disabled, Self-reset, Latched

Default: Self-reset

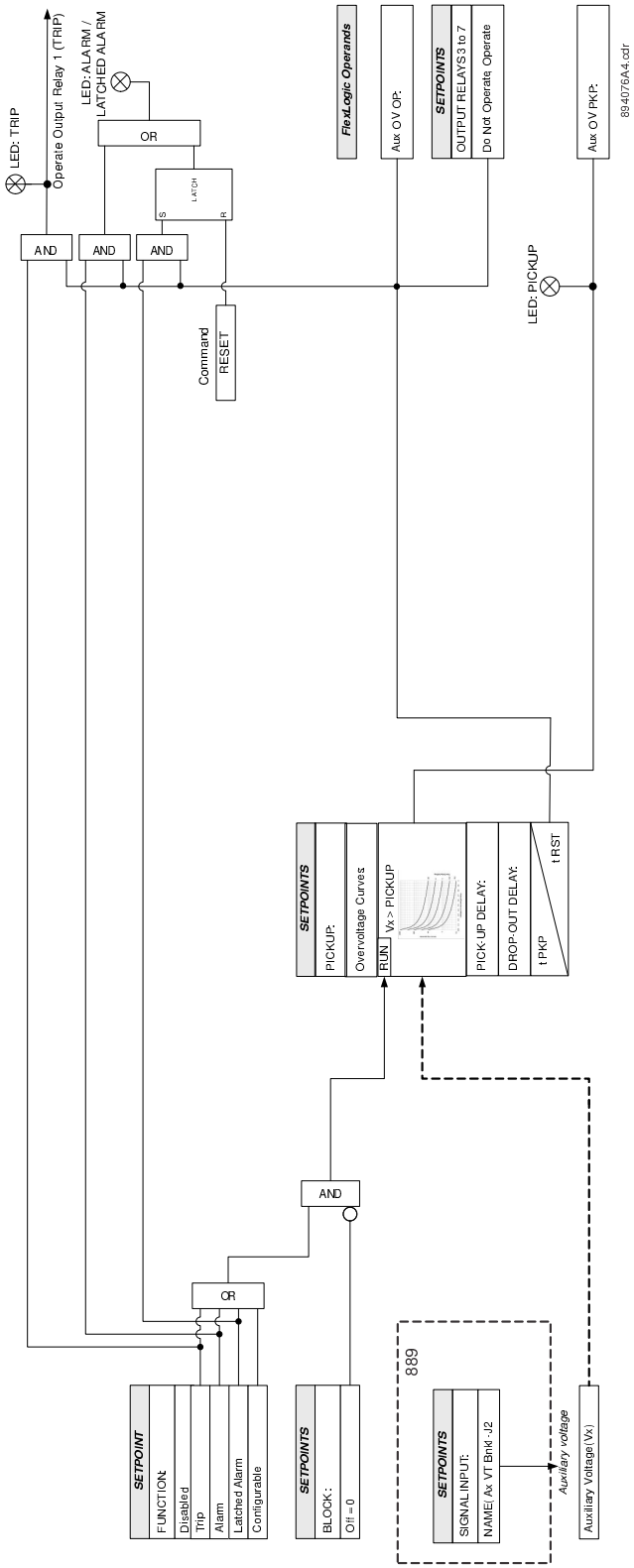

Figure 156: Auxiliary Overvoltage Protection logic diagram

8.5.7 NEUTRAL OVERVOLTAGE PROTECTION (59N)

The relay provides one Neutral Overvoltage (Neutral OV, also called Neutral Displacement) element per protection group.

The Neutral Overvoltage element can be used to detect asymmetrical system voltage conditions caused by a ground fault or the loss of one or two phases of the source. The element responds to the system neutral voltage (3V0), calculated from the phase voltages. The nominal secondary voltage of the phase voltage channels entered under ***Setpoints*** > ***System*** > ***Voltage Sensing*** > ***Phase VT Secondary*** is the base used when setting the Pickup level. The Neutral Overvoltage element can provide a time-delayed operating characteristic versus the applied voltage (initialized from FlexCurves A, B, C or D) or can be used as a definite time element. The source voltage assigned to this element must be configured for a phase VT and phase VTs must be wye connected. VT errors and normal voltage unbalance must be considered when setting this element.

Note:
The same curves used for the time overcurrent elements are used for Neutral Displacement. When using the curve to determine the operating time of the Neutral Displacement element, substitute the ratio of neutral voltage to Pickup level for the current ratio shown on the horizontal axis of the curve plot.

The Neutral Overvoltage feature should be applied with caution. It would normally be applied to give line-to-ground fault coverage on high impedance grounded or ungrounded systems, which are isolated. This constraint stems from the fact that a measurement of 3V0 cannot discriminate between a faulted circuit and an adjacent healthy circuit. Use of a time delayed back-up or alarm mode allows other protections an opportunity to isolate the faulted element first.

The settings of this function are applied to 3V0 calculated from the three phase-to-ground (wye connected VTs) voltage inputs to produce Pickup and Trip flags per 3V0 calculated voltage. The Neutral OV Pickup flag is asserted when the calculated 3V0 voltage is above the PKP value. The Neutral OV Trip flag is asserted if the element stays picked up for the time defined by the selected inverse curve and the magnitude of the 3V0 voltage. The element drops from Pickup without operation, if the calculated voltage drops below 97 to 98% of the Pickup value before the time for operation is reached.

Path: ***Setpoints*** > ***Protection*** > ***Group 1(6)*** > ***Voltage Elements*** > ***Neutral OV 1(X)***

FUNCTION

Range: Disabled, Trip, Alarm, Latched Alarm, Configurable

Note: Relays with firmware version 4 and later have a `Latched Trip` *option*

Default: Disabled

SIGNAL INPUT

Range: dependent upon the order code

Default: Ph VT Bnk1-J2 or LEA Bnk1-J2, Dependent on order code

This setting provides the selection for the voltage bank input.

PICKUP

Range (3.xx): 0.02 to 3.00 x VT in steps of 0.01 x VT

Range (4.10): 0.02 to 4.00 x VT in steps of 0.01 x VT

Default: 0.30 x VT

CURVE

Range (3.xx): Definite Time, FlexCurve A, FlexCurve B, FlexCurve C, FlexCurve D

Range (4.10): Definite Time, FlexCurve A, FlexCurve B, FlexCurve C, FlexCurve D, Inverse time

Default: Definite Time

PICKUP DELAY

Range: 0.000 to 6000.000 s in steps of 0.001 s

Default: 1.000 s

The ***NEUTRAL OV 1 PICKUP DELAY*** setting applies only if the ***NEUTRAL OV 1 CURVE*** setting is `Definite time`.

DROPOUT DELAY

Range: 0.000 to 6000.000 s in steps of 0.001 s

Default: 1.000 s

BLOCK

Range: Off, Any FlexLogic operand

Default: Off

OUTPUT RELAY X

Range: Operate, Do Not Operate

Default: Do Not Operate

EVENTS

Range: Enabled, Disabled

Default: Enabled

TARGETS

Range: Disabled, Self-reset, Latched

Default: Self-reset

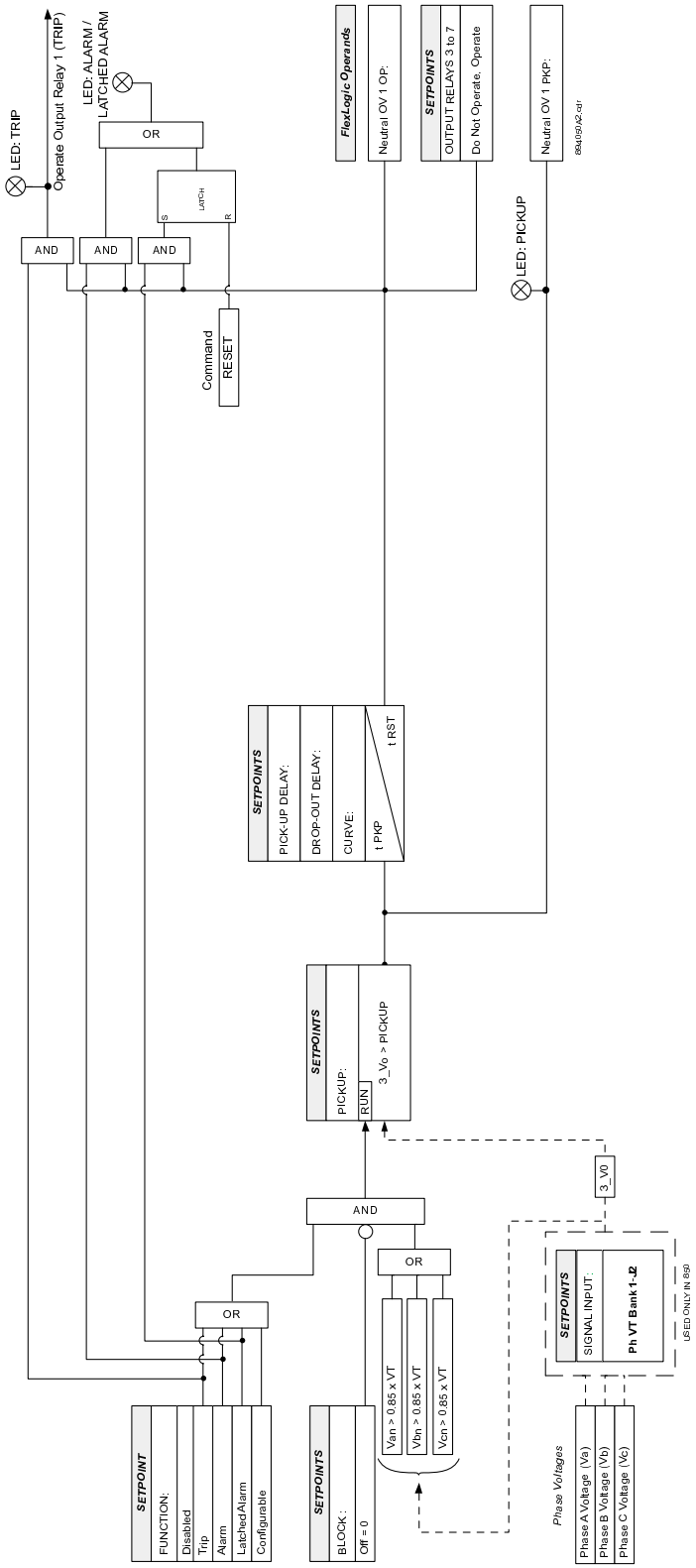

Figure 157: Neutral Overvoltage Protection logic diagram

8.5.8 NEGATIVE SEQUENCE OVERVOLTAGE PROTECTION (59_2)

The relay provides one Negative Sequence Overvoltage (Negative Sequence OV 1) element per protection group, or a total of 6 elements.

The Negative Sequence Overvoltage element can be used to detect an asymmetrical system voltage condition, loss of one or two phases of the source, or reversed phase sequence of voltages. The element responds to the negative sequence voltage (V2), calculated from the phase voltages. The Negative Sequence Overvoltage element may be set as an instantaneous element with no time delay, or may be set as a definite time element.

The settings of this function are applied to the calculated Negative Sequence Voltage to produce Pickup and Trip flags. The Negative Sequence OV Pickup flag is asserted when the Negative Sequence Voltage is above the PKP value. The Negative Sequence OV Trip flag is asserted if the element stays picked up for the time defined by Pickup time delay. The element drops from Pickup without operation if the calculated Negative Sequence Voltage drops below 97 to 98% of the Pickup value before the time for operation is reached.

Path: ***Setpoints*** > ***Protection*** > ***Group 1(6)*** > ***Voltage*** > ***Neg Seq OV 1(X)***

FUNCTION

Range: Disabled, Trip, Alarm, Latched Alarm, Configurable

Note: Relays with firmware version 4 and later have a `Latched Trip` *option*

Default: Disabled

SIGNAL INPUT

Range: dependent upon the order code

Default: Ph VT Bnk1-J2 or LEA Bnk1-J2, dependent on order code

PICKUP

Range: 0.00 to 3.00 x VT in steps of 0.01 x VT

Default: 1.00 x VT

This setting sets the Negative Sequence Overvoltage Pickup level specified per times VT. For example, a Pickup setting of 0.80 x VT with 13800:115 VT translates into 11.04 kV (or 92 V secondary).

> *Note:*
> *If the 3 phase VT is delta connected, the Negative Sequence Overvoltage pickup level is internally changed to $1/\sqrt{3}$ of the user setting, before being compared to the actual negative sequence voltage.*

PICKUP DELAY

Range: 0.000 to 6000.000 s in steps of 0.001 s

Default: 1.000 s

This setting provides definite time pick-up delay. Instantaneous operation is selected by pick-up time delay setting of 0.000 s.

DROPOUT DELAY

Range: 0.000 to 6000.000 s in steps of 0.001 s

Default: 1.000 s

This setting provides definite time drop-out delay. An instantaneous reset is provided by drop-out time delay setting of 0.000 s

BLOCK

Range: Off, Any FlexLogic operand

Default: Off

OUTPUT RELAY X

Range: Operate, Do Not Operate

Default: Do Not Operate

EVENTS

Range: Enabled, Disabled

Default: Enabled

TARGETS

Range: Disabled, Self-reset, Latched

Default: Self-reset

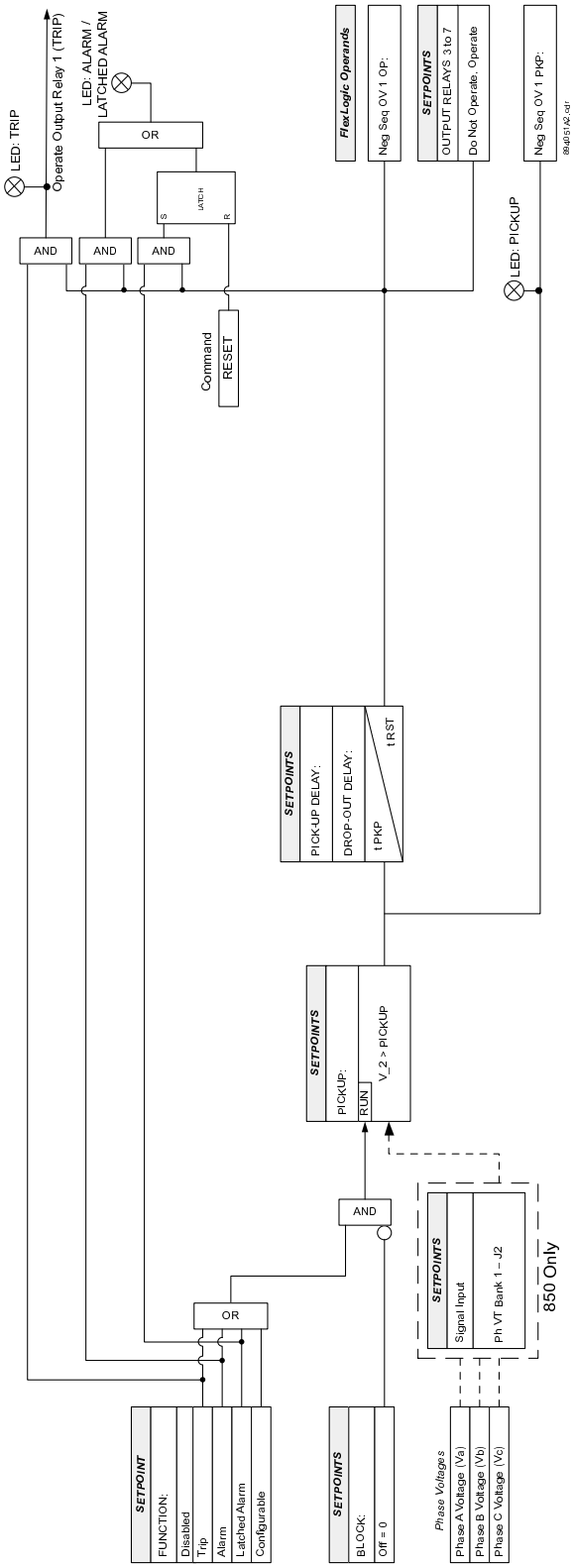

Figure 158: Negative Sequence Overvoltage Protection logic diagram

8.5.9 VOLTS PER HERTZ (24)

The volts-per-hertz (V/Hz) value is calculated using the maximum of the three-phase voltage inputs. If there is no voltage on the relay terminals, the V/Hz value is automatically set to “0”. The V/Hz value is established as per

voltage and nominal frequency power system settings as follows: if the phase voltage inputs defined in the source menu are used for V/Hz operation, then V/Hz is based on the selected ***Setpoint*** > ***System*** > ***Voltage Sensing*** > ***Ph VT Bnk1-J2*** > ***Voltage 1*** > ***Phase VT Secondary*** setting, and the ***Setpoint*** > ***System*** > ***Power System*** > ***Nominal Frequency*** setting.

For example, if Phase VT Secondary and Nominal Frequency are set as 120 V and 60 Hz, respectively, these set values define the base unit as 1 x (V/Hz).

The volts-per-hertz ratio after division of these nominal settings is 120/60 = 2.

Assume the ***PICKUP*** setpoint from the V/Hz element is set to `1.05 x (V/Hz)`. This will mean that in order for the element to pick up, the actual volts-per-hertz ratio after division should be 2 *1.05 = 2.1.

The ratio of 2.1 can be achieved if for example the measured voltage is 126V and frequency is 60 Hz, or the voltage is constant at 120 V and the frequency is 57.14 Hz, or any other combination of these two values, which after V/Hz division equals 2.1.

To check back the ***PICKUP*** setting, we use the base (V/Hz) unit = 120/60 = 2, such that the ***PICKUP*** setting value is 2.1/2 = 1.05 x (V/Hz).

The element has a linear reset characteristic. The reset time can be programmed to match the cooling characteristics of the protected equipment. The element will fully reset from the trip threshold in Reset Time seconds. The V/Hz element can be used as an instantaneous element with no intentional time delay or as a Definite or Inverse timed element. The characteristics of the inverse curves are shown as follows.

Path: ***Setpoints*** > ***Protection*** > ***Group 1(6)*** > ***Voltage*** > ***Volts per Hertz 1(2)***

FUNCTION

Range: Disabled, Trip, Alarm, Latched Alarm, Configurable

Note: Relays with firmware version 4 and later have a `Latched Trip` *option*

Default: Disabled

SIGNAL INPUT

Range: dependent on the order code

Default: Ph VT Bnk1-J2

This setting specifies the input voltage used to calculate the per-unit volts-per-Hertz (V/Hz). If three phase voltages are used then set the AC Inputs to “Ph VT Bnk1-J2”. To use the V/Hz element with auxiliary voltage, set AC Inputs to “Aux VT Bnk1-J2”.

VOLTAGE MODE

Range: Phase-ground, Phase-phase

Default: Phase-ground

If the Phase VT Connection is selected as “Wye”, then the ***VOLTAGE MODE*** setting further defines the operating quantity and per-unit value for this element. If the ***VOLTAGE MODE*** is set as “Phase-phase”, then the operating quantity for this element will be phase-to-phase nominal voltage. Likewise, if the ***VOLTAGE MODE*** is set to “Phase-ground”, then the operating quantity for this element will be the phase-to-ground nominal voltage.

If the Phase VT Connection (set under ***Setpoint*** > ***System*** > ***Voltage Sensing***) is selected as “Delta”, then the phase-to-phase nominal voltage is used to define the per-unit value, regardless of the Voltage Mode selection.

PICKUP

Range: 0.80 to 4.00 V/Hz in steps of 0.01

Default: 1.05 V/Hz

Enter the Volts per Hertz value (in V/Hz) above which the Volts per Hertz 1 element will pickup.

CURVE

Range: Definite Time, Inverse A, Inverse B, Inverse C, FlexCurve A, FlexCurve B, FlexCurve C, FlexCurve D

Default: Definite Time

Definite Time: For the definite time curve, T(s) = TD multiplier. For example, setting the TD multiplier to 20 results in a time delay of 20 seconds to operate when above the Volts/Hz pickup setting. Instantaneous operation can be obtained the same way by setting the TD multiplier to “0”.

Inverse Curve A: The curve for the Volts/Hertz Inverse Curve A shape is derived from the formula:

$$T = \frac{TDM}{\left[\left(\frac{V}{F}\right)\Big/Pickup\right]^2 - 1} \quad when \ \frac{V}{F} > Pickup$$

where:

- T = Operating Time
- TDM= Time Delay Multiplier (delay in seconds)
- V = fundamental RMS value of voltage (pu)
- F = frequency of voltage signal (pu)
- Pickup = volts-per-hertz pickup setpoint (pu)

The volts/hertz inverse A curves are shown below.

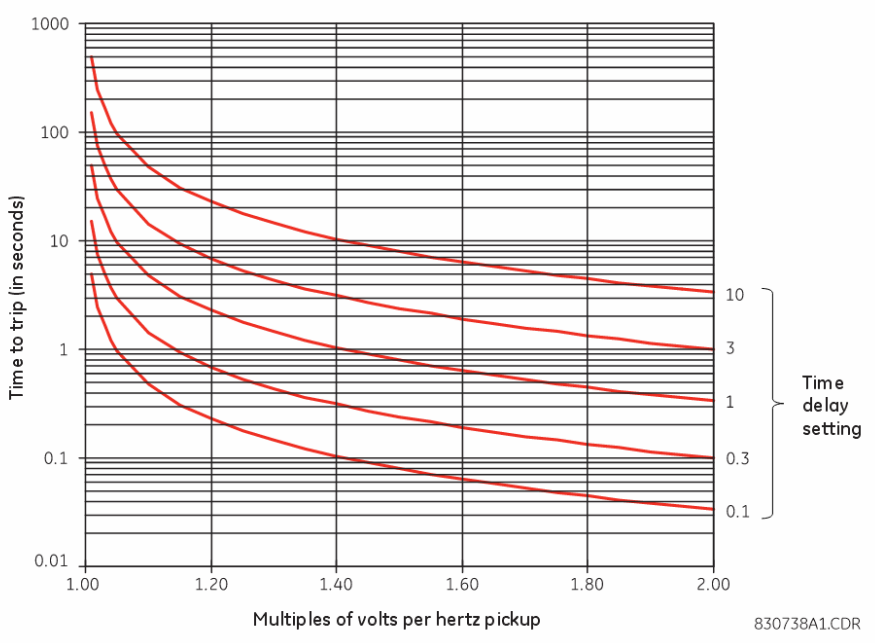

Figure 159: Volts-Per-Hertz Curves for Inverse Curve A

Inverse Curve B: The curve for the Volts/Hertz Inverse Curve B shape is derived from the formula:

$$T = \frac{TDM}{\left[\left(\frac{V}{F}\right)\Big/Pickup\right] - 1} \quad when \ \frac{V}{F} > Pickup$$

where:

- T = Operating Time
- TDM = Time Delay Multiplier (delay in seconds)
- V = fundamental RMS value of voltage (pu)
- F = frequency of voltage signal (pu)
- Pickup = volts-per-hertz pickup setpoint (pu)

The Volts/Hertz inverse B curves are shown below.

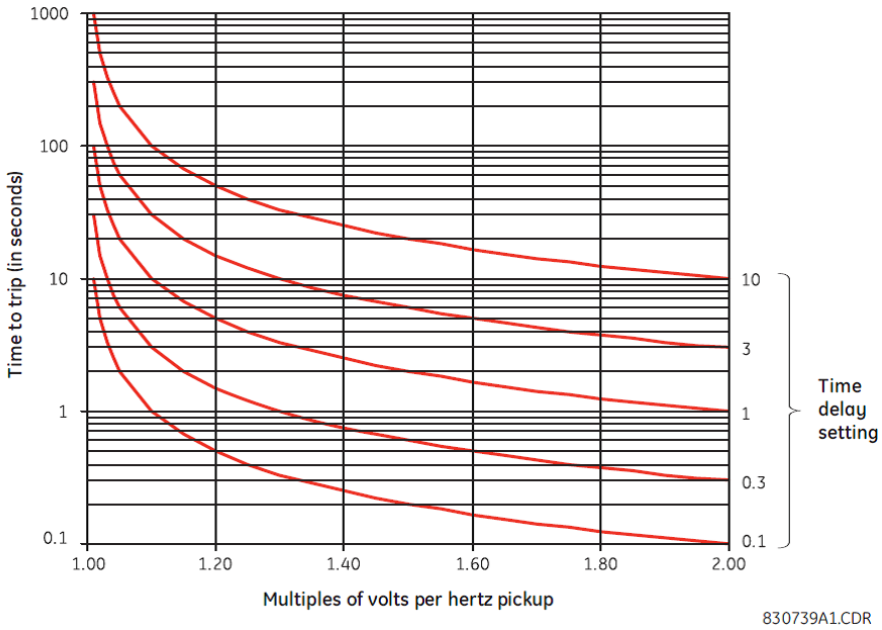

Figure 160: Volts-Per-Hertz Curves for Inverse Curve B

Inverse Curve C: The curve for the Volts/Hertz Inverse Curve C shape is derived from the formula:

$$T = \frac{TDM}{\left[\left(\frac{V}{F}\right)\Big/Pickup\right]^{1/2} - 1} \quad when \ \frac{V}{F} > Pickup$$

where:

- T = Operating Time
- TDM = Time Delay Multiplier (delay in seconds)

- V = fundamental RMS value of voltage (pu)
- F = frequency of voltage signal (pu)
- Pickup = volts-per-hertz pickup setpoint (pu)

The Volts/Hertz Inverse C curves are shown below.

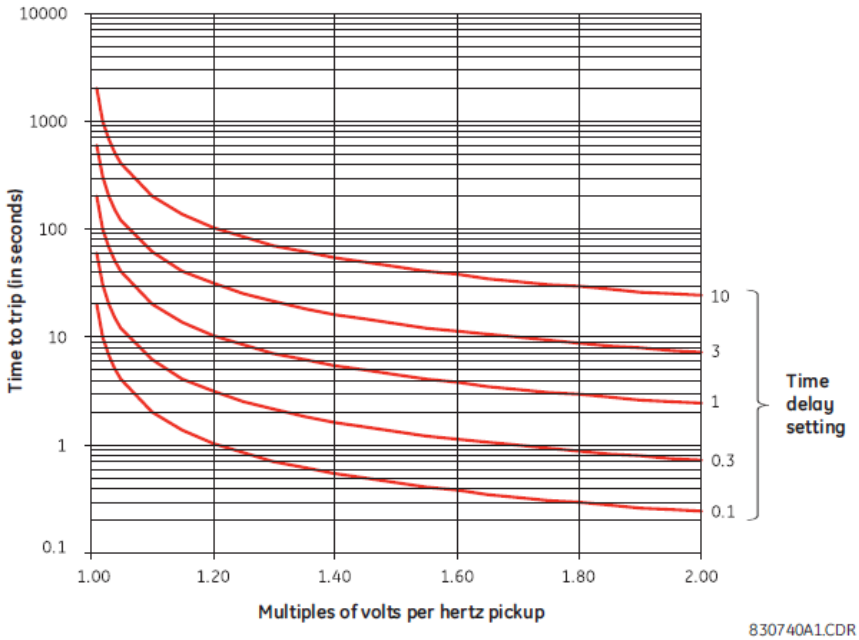

Figure 161: Volts-Per-Hertz Curves for Inverse Curve C

TD MULTIPLIER

Range: 0.05 to 600.00 in steps of 0.01

Default: 1.00

This setting provides a selection for the Time Dial Multiplier which modifies the operating times for the selected inverse curve.

T RESET

Range: 0.00 to 6000.00 in steps of 0.01

Default: 1.00

Enter the time that the Volts per Hertz value must remain below the pickup level before the element resets.

BLOCK

Range: Off, Any FlexLogic Operand

Default: Off

The Volts per Hertz can be blocked by any asserted FlexLogic operand.

OUTPUT RELAY X

Range: Operate, Do Not Operate

Default: Do Not Operate

EVENTS

Range: Enabled, Disabled

Default: Enabled

TARGETS

Range: Disabled, Self-reset, Latched

Default: Self-reset

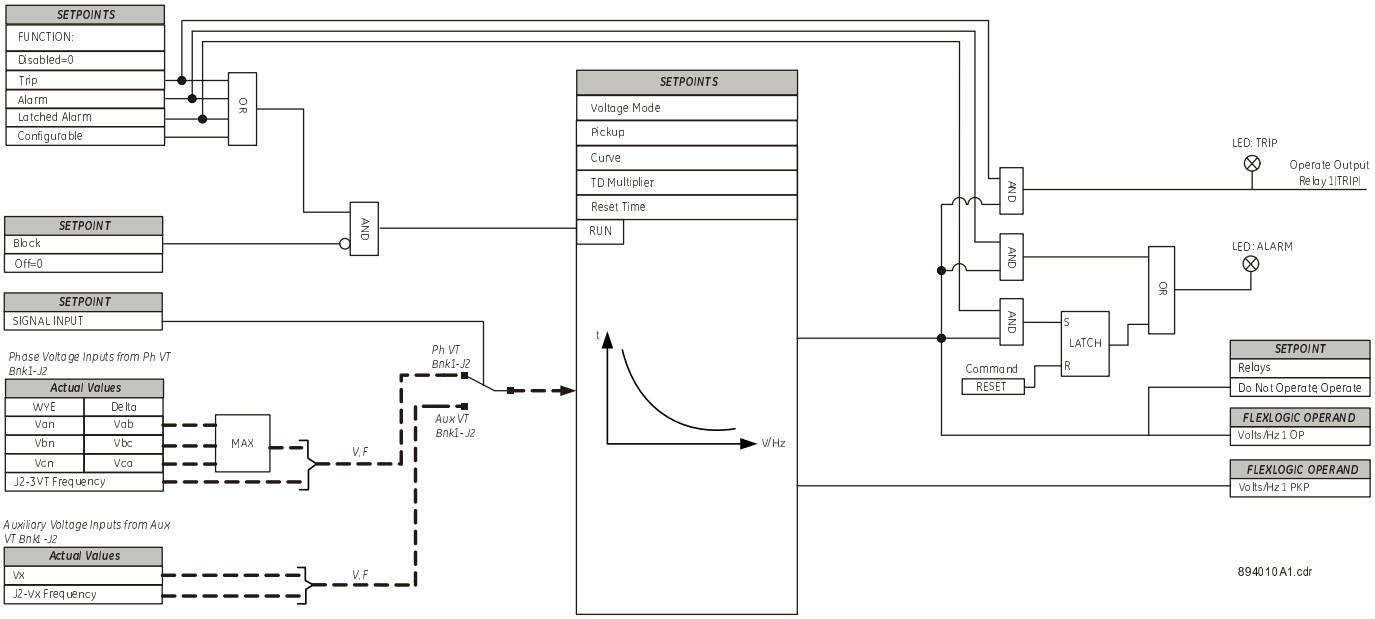

Figure 162: Volts per Hertz logic diagram

8.6 IMPEDANCE ELEMENTS

8.6.1 OUT-OF-STEP (78)

The Out-of-step element provides an out-of-step (loss-of-synchronism or pole slip) tripping function for machines. The element measures the positive-sequence apparent impedance, and traces its locus with respect to a single blinder operating characteristic with an offset mho supervisory. The purpose of the supervisory mho is to permit tripping for swings that pass through the machine and a limited portion of the system, but to prevent operation on stable swings that pass through both blinders and outside the mho characteristic.

The out-of-step tripping feature operates as follows: The trip sequence identifies unstable power swings by determining whether the impedance locus enters one blinder, spends a finite time between the left and right blinder characteristics, and then exits the opposite blinder. The out-of-step trip process is supervised by a mho characteristic. If the locus enters the left blinder, right blinder and mho characteristic (indicated by the AND operation of OOS LFT BLD PKP and OOS RGT BLD PKP FlexLogic operands) for an interval longer than ***PICKUP DELAY***, the timing out signal (OOS TIMER PKP FlexLogic operand) is established. After the ***PICKUP DELAY*** timer times out, latch 1 is set as long as the impedance stays within the mho characteristic. If afterwards, at any time (given the impedance stays between the two blinders characteristic), the locus exits from the opposite blinder, latch 2 is set as long as the impedance stays inside the mho caracteristic. The element is now ready to trip. If the “Blinder Exit” trip mode is selected, the OOS OP operand is set immediately and sealed-in for the interval set by the ***SEAL-IN DELAY***. If the “MHO Exit” trip mode is selected, the element waits until the impedance locus leaves the mho characteristic, and then the OOS OP operand is set and sealed-in.

The element is set to use the single blinder characteristic with a supervisory mho as illustrated below.

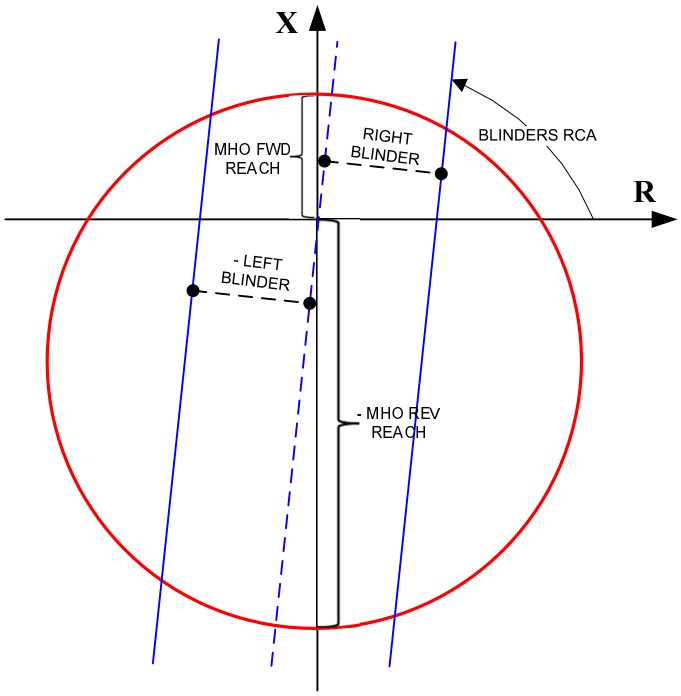

The FlexLogic output operands for the out-of-step element are described as follows:

- The OOS Lft Bld PKP, OOS Rgt Bld PKP, and OOS Timer PKP FlexLogic operands are auxiliary operands that can be used to facilitate testing and special applications.
- The OOS OP FlexLogic operand can be used to trip the circuit breaker to isolate the loss-of-synchronism .

Follow these steps for a typical setting procedure of the out-of-step element:

1. Carry out detailed transient stability studies for the overall system.
2. Determine the values of generator transient reactance (X'_d), step-up transformer reactance (X_T), and system impedance under maximum generation (Z_{maxS}). The total impedance is given by:

$$Z_{total} = Z_{maxS} + j * X'_d + j * X_T$$

3. Determine the values of the machine transient reactance (X'_d), and system impedance (Z_S). The total impedance is given by $Z_{total} = Z_S + j * X'_d$
4. Set ***MHO FORWARD REACH*** to 1.5 times the transformer impedance in the system direction. Set ***MHO REVERSE REACH*** to twice the generator transient reactance in the generator direction.
5. Set ***BLINDERS RCA*** to the angle of Z_{total}, θ.
6. Using the results of transient stability analysis, find the critical angle δ_c between the machine and the system, beyond which the system begins to become unstable. If a stability study is not available, this angle is typically set at 120°. Then, 10 degrees are normally added in order to increase relay operation security, $\delta = \delta_c + 10$.
7. Determine the blinder distance, d, from the following equation:

$$d = \frac{|Z_{total}|}{2} \tan(90 - \frac{\delta}{2})$$

8. Set ***RIGHT BLINDER*** and ***LEFT BLINDER*** to *d*.
9. Using the results of the transient stability analysis, find the ***PICKUP DELAY***, which is shorter than the time required for the impedance locus to travel between the left and right blinders during the fastest expected out-of-step.
10. Validate the settings with the transient stability study cases.

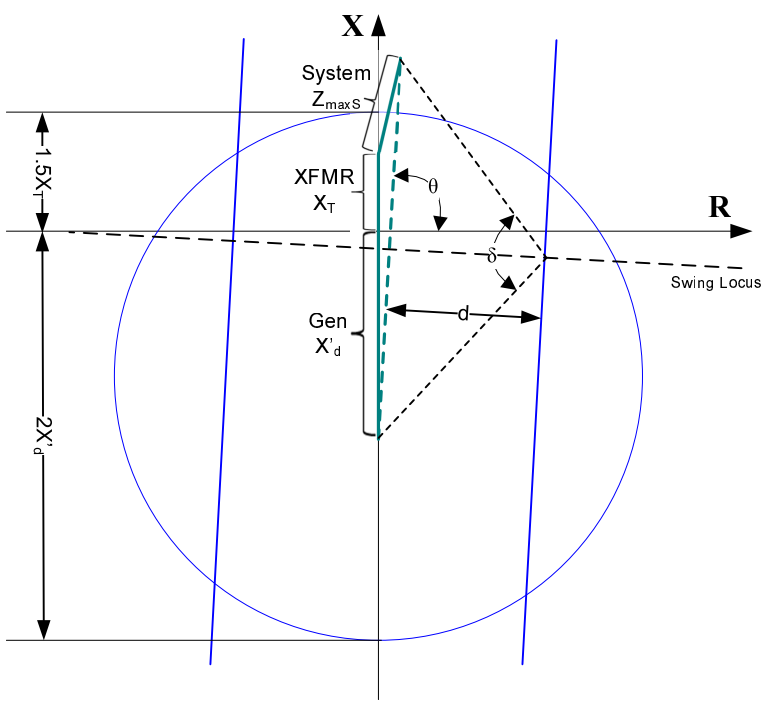

Figure 163: A Typical Out-of-step Setting

Path: ***Setpoints*** > ***Protection*** > ***Group 1(6)*** > ***Impedance*** > ***Out of Step***

FUNCTION

Range: Disabled, Trip, Alarm, Latched Alarm, Configurable

Note: Relays with firmware version 4 and later have a `Latched Trip` *option*

Default: Disabled

SIGNAL INPUT

Range: Positive Impedance 1, Positive Impedance 2

Default: Positive Impedance 1

This setting provides the selection for the positive sequence impedance which is calculated by terminal side or neutral side CT. Positive sequence impedance 1 is calculated using 3-phase J1 currents and 3-phase J2 voltages. Positive sequence impedance 2 is calculated using 3-phase K1 currents and 3-phase J2 voltages.

MHO FORWARD REACH

Range: 0.10 to 500.00 ohms in steps of 0.01 ohms

Default: 2.00 ohms

This setting specifies the forward reach of the mho characteristic. The reach impedance is entered in secondary ohms. The reach impedance angle is fixed to 90 degrees.

MHO REVERSE REACH

Range: 0.10 to 500.00 ohms in steps of 0.01 ohms

Default: 2.00 ohms

This setting specifies the reverse reach of the mho characteristic. The reach impedance is entered in secondary ohms. The reach impedance angle is fixed to -90 degrees.

RIGHT BLINDER

Range: 0.10 to 500.00 ohms in steps of 0.01 ohms

Default: 2.00 ohms

This setting defines the right blinder position of the blinder characteristic along with the resistive axis of the impedance plane, expressed ins secondary ohms. The angular position of the blinder is adjustable with the use of the ***BLINDERS RCA*** setting.

LEFT BLINDER

Range: 0.10 to 500.00 ohms in steps of 0.01 ohms

Default: 2.00 ohms

This setting defines the left blinder position of the blinder characteristic along with the resistive axis of the impedance plane, expressed ins secondary ohms. The angular position of the blinder is adjustable with the use of the ***BLINDERS RCA*** setting.

BLINDERS RCA

Range: 40 to 90° in steps of 1°

Default: 90°

This setting defines the angular position of the left and right blinders.

PICKUP DELAY

Range: 0.000 to 1.000 s in steps of 0.001 s

Default: 0.100 s

This setting should be set to detect the fastest expected unstable power swing and produce out-of-step tripping in a secure manner. This timer defines the interval that the impedance locus must spend between the left and right blinders to establish the out-of-step tripping signal. This time delay must be set shorter than the time required for the impedance locus to travel between the left and right blinders during the fastest expected out-of-step. Setting the delay too long can reduce dependability.

TRIP MODE

Range: Blinder Exit, MHO Exit

Default: MHO Exit

Selecting `Blinder Exit` results in an instantaneous trip after the last step in the out-of-step tripping sequence is completed (the impedance locus leaves the opposite blinder). The Blinder Exit trip mode stresses the circuit breakers as the currents at that moment are high (the electromotive forces of the two equivalent systems are close to 180° apart).

Selecting `MHO Exit` results in a trip at the moment when the impedance locus leaves the mho characteristic. The MHO Exit trip mode relaxes the operating conditions for the breakers as the currents at that moment are low, preventing the breakers from a maximum recovery voltage during interruption. The selection should be made considering the capability of the breakers in the system.

POS SEQ CURR SUPERVISION

Range: 0.05 to 10.00 x CT in steps of 0.01 x CT

Default: 1.00 x CT

A common overcurrent pickup level supervises the left and right blinder characteristics. The supervision responds to the positive sequence current.

VTFF SUPERVISION

Range: Disabled, VT Fuse Failure 1, VT Fuse Failure 2

Default: Disabled

A VT fuse failure could cause a maloperation of a distance element unless the element is supervised by the VTFF element.

VTFF Supervision is only available if VT Fuse Failure 1(2) function is enabled, otherwise this setpoint is hidden.

SEAL-IN DELAY

Range: 0.000 to 1.000 s in steps of 0.001 s

Default: 0.100 s

The out-of-step trip FlexLogic operand (OOS OP) is sealed-in for the specified period of time. The sealing-in is crucial to the MHO Exit trip mode, as the original trip signal is a very short pulse occurring when the impedance locus leaves the mho characteristic after the out-of-step sequence is completed.

BLOCK

Range: Off, Any FlexLogic operand

Default: Off

OUTPUT RELAY X

Range: Operate, Do Not Operate

Default: Do Not Operate

EVENTS

Range: Enabled, Disabled

Default: Enabled

TARGETS

Range: Self-reset, Latched, Disabled

Default: Latched

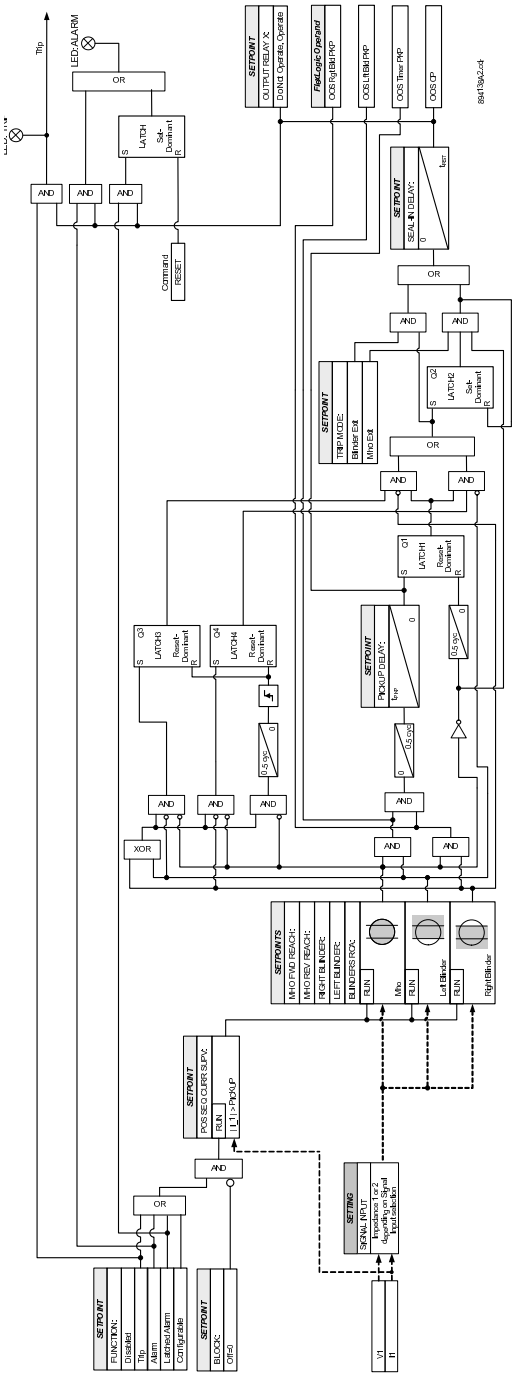

Figure 164: Out-of-step Protection Logic Diagram

8.7 POWER ELEMENTS

8.7.1 DIRECTIONAL POWER (32)

The relay provides two identical Directional Power elements per protection group; a total of 12 elements.

The Directional Power element responds to three-phase directional power and is designed for reverse power (32REV) and low forward power (32FWD) applications for synchronous machines or interconnections involving co-generation. The relay measures the three-phase power from either a full set of wye-connected VTs or a full-set of delta-connected VTs. In the latter case, the two-wattmeter method is used.

The element has an adjustable characteristic angle and minimum operating power as shown in the Directional Power characteristic diagram. The element responds to the following condition:

$$P\cos\theta + Q\sin\theta > MIN$$

Where:

- P and Q are active and reactive powers as measured per the metering convention
- Θ is a sum of the element characteristic (DIR POWER 1 RCA) and calibration (DIR POWER 1 CALIBRATION) angles
- SMIN is the minimum operating power.

The element has two independent (as to the ***PICKUP*** and ***DELAY*** settings) stages for Alarm and Trip, and they can be set separately to provide mixed power protection.

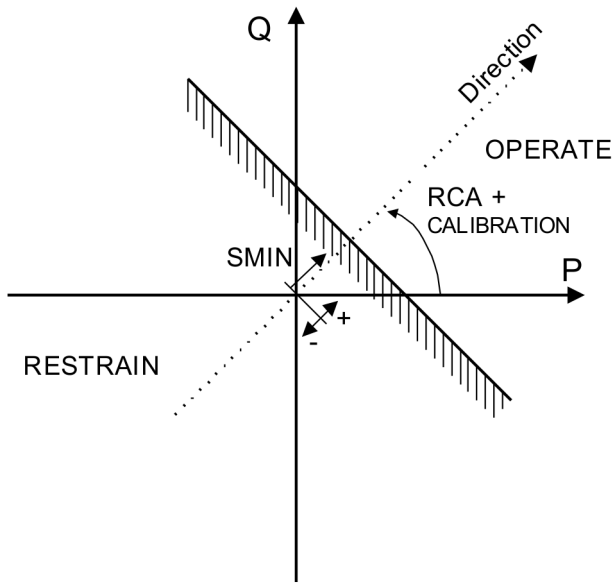

Figure 165: Directional Power characteristic

By making the characteristic angle adjustable and providing for both negative and positive values of the minimum operating power, a variety of operating characteristics can be achieved as presented in the figure below. For example, section (a) in the figure below shows settings for reverse power, while section (b) shows settings for low forward power applications.

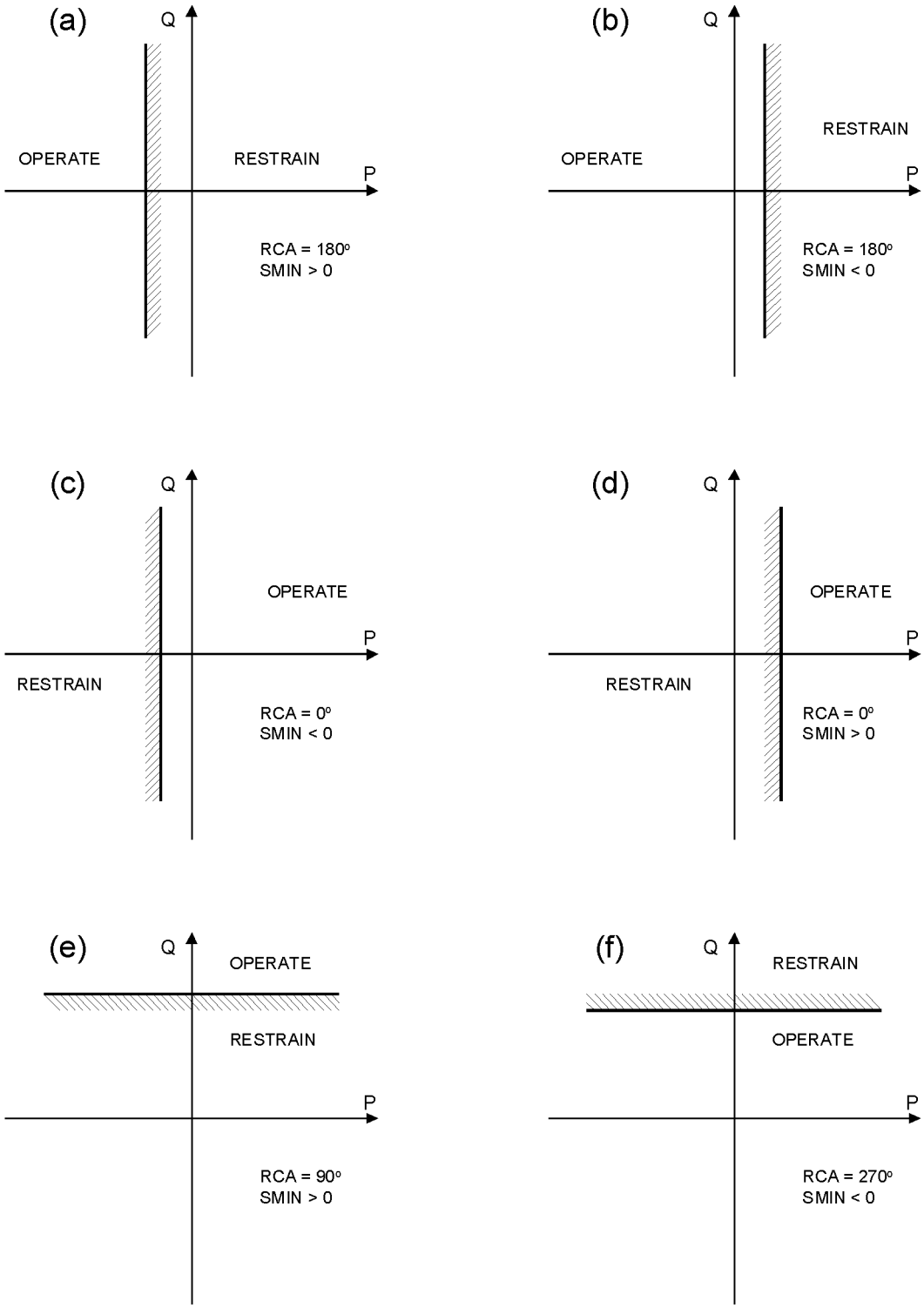

Figure 166: Sample applications of the Directional Power element

Path: ***Setpoints*** > ***Protection*** > ***Group 1(6)*** > ***Power*** > ***Directional Power 1(X)***

FUNCTION

Range: Disabled, Trip, Alarm, Latched Alarm, Configurable

Note: Relays with firmware version 4 and later have a `Latched Trip` *option*

Default: Disabled

SIGNAL INPUT

Range: Power 1, Power 2

Default: Power 1

This setting provides the selection for the power input. Depending on the order code selection, the corresponding CT/VT inputs to calculate power are selected under ***Setpoints*** > ***System*** > ***Power Sensing***.

RCA

Range: 0 to 359° in steps of 1°

Default: 180°

This setting specifies the Relay Characteristic Angle (RCA) for the Directional Power function. Application of this setting provides the following benefits:

- It allows the element to respond to active or reactive power in any direction (active overpower/underpower, etc.).
- Together with a precise calibration angle, it allows compensation for any CT and VT angular errors to permit more sensitive settings.
- It allows for required direction in situations when the voltage signal is taken from behind a delta-wye connected power transformer and phase angle compensation is required.

For example, the active overpower characteristic is achieved by setting ***DIR POWER 1 RCA*** to “0°,” reactive overpower by setting ***DIR POWER 1 RCA*** to “90°,” active underpower by setting ***DIR POWER 1 RCA*** to “180°,” and reactive underpower by setting ***DIR POWER 1 RCA*** to “270°”.

CALIBRATION

Range: 0 to 0.95° in steps of 0.05°

Default: 0°

This setting allows the Relay Characteristic Angle to change in steps of 0.05°. This may be useful when a small difference in VT and CT angular errors is to be compensated to permit more sensitive settings.

The setting enables calibration of the Directional Power function in terms of the angular error of applied VTs and CTs. The element responds to the sum of the ***DIR POWER 1 RCA*** and ***DIR POWER 1 CALIBRATION*** settings.

STAGE 1 SMIN

Range: -3.000 to 3.000 x Rated Power in steps of 0.001 x Rated Power

Default: 0.100 x Rated Power

The setting specifies the minimum power as defined along the relay characteristic angle (RCA) for the stage 1 of the element. The positive values imply a shift towards the operate region along the RCA line; the negative values imply a shift towards the restrain region along the RCA line. Refer to the Directional power sample applications figure for details. Together with the RCA, this setting enables a wide range of operating characteristics.

The setting applies to three-phase power and the rated power is as follows:

$$\text{Rated Power} = 3 \times VT_{\text{Secondary (phase-neutral)}} \times VT_{\text{Ratio}} \times CT_{\text{Primary}} \text{(Wye-connected VT), or Rated Power} = (3)^{1/2} \times VT_{\text{Secondary (phase-phase)}} \times VT_{\text{Ratio}} \times CT_{\text{Primary}} \text{ (Delta-connected VT)}$$

For example:

A setting of 2% for a 200 MW machine is 0.02 × 200 MW = 4 MW.

If 7.967 kV is a primary VT phase-neutral voltage and 10 kA is a primary CT current, the source rated power is 239 MVA, and, SMIN must be set at 4 MW/239 MVA =0.0167 x Rated ≈ 0.017 x Rated.

If the reverse power application is considered, RCA = 180° and SMIN = 0.017 x Rated.

The element drops out if the magnitude of the positive-sequence current becomes virtually zero, that is, it drops below the cutoff level.

STAGE 1 DELAY

Range: 0.000 to 6000.000 s in steps of 0.001 s

Default: 0.500 s

The setting specifies a time delay for stage 1. For reverse power or low forward power applications for a synchronous machine, stage 1 is typically applied for alarming and stage 2 for tripping.

STAGE 2 SMIN

Range: -3.000 to 3.000 x Rated Power in steps of 0.001 x Rated Power

Default: 0.100 x Rated Power

The setting specifies the minimum power as defined along the relay characteristic angle (RCA) for stage 2 of the element. The setting needs to be coordinated with the setting of stage 1.

STAGE 2 DELAY

Range: 0.000 to 6000.000 s in steps of 0.001 s

Default: 20.000 s

The setting specifies a time delay for stage 2. For reverse power or low forward power applications for a synchronous machine, stage 1 is typically applied for alarming and stage 2 for tripping.

BLOCK

Range: Off, Any FlexLogic operand

Default: Off

OUTPUT RELAY X

Range: Operate, Do Not Operate

Default: Do Not Operate

EVENTS

Range: Enabled, Disabled

Default: Enabled

TARGETS

Range: Self-reset, Latched, Disabled

Default: Self-reset

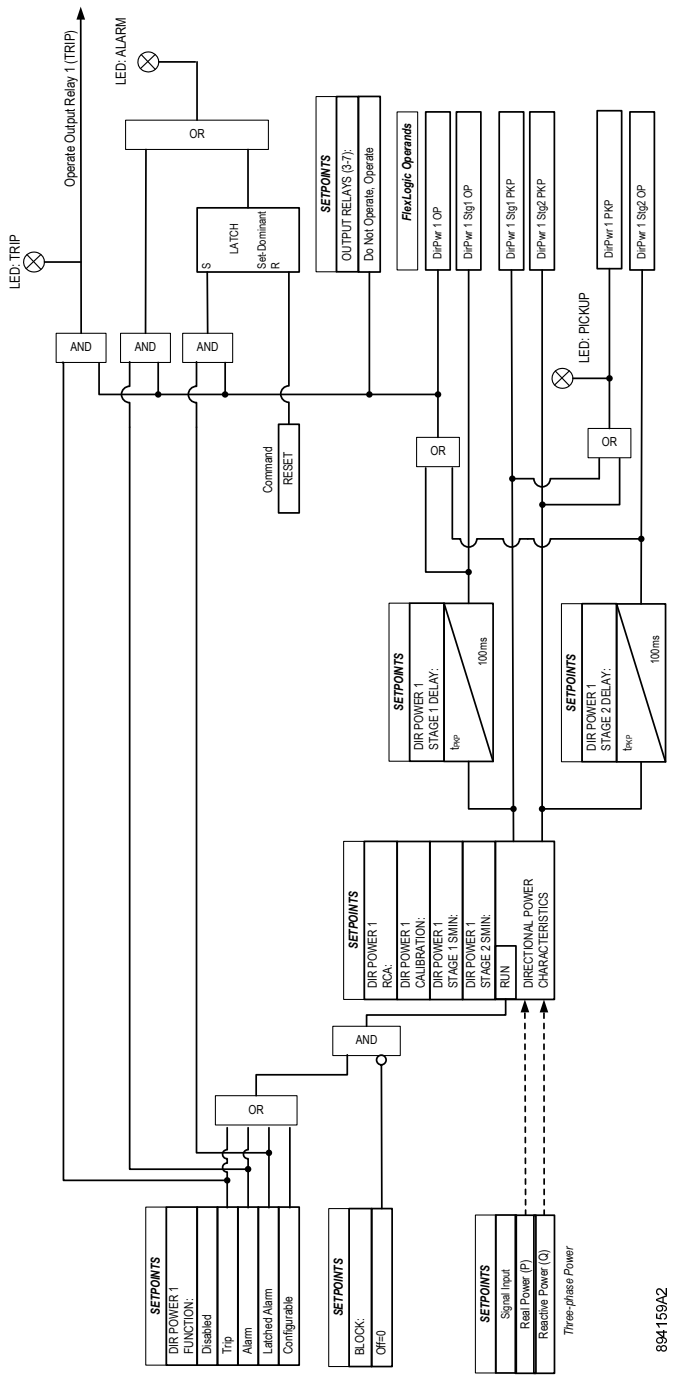

Figure 167: Directional Power logic diagram

8.7.2 REACTIVE POWER (40Q)

In a generator application, the reactive power element can be used to detect excitation system malfunction, e.g. under excitation, loss of excitation, etc. Once the 3-phase total reactive power exceeds the positive or negative level, for the specified delay, a trip or alarm will occur indicating a positive or negative Mvar condition. The level is programmed in per unit of generator rated MVAR calculated from the rated MVA and rated power factor. VTFF detection can be used to block this function.

Path: ***Setpoints*** > ***Protection*** > ***Group 1*** > ***Power*** > ***Reactive Power***

TRIP FUNCTION

Range: Disabled, Trip, Configurable

Note: Relays with firmware version 4 and later have a `Latched Trip` *option*

Default: Disabled

This setting enables the Reactive Power Trip functionality.

POSITIVE VAR TRIP PICKUP

Range: 0.02 to 2.00 x Rated in steps of 0.01

Default: 0.80 x Rated

This setting specifies a pickup threshold for the positive MVAR trip function. The level is programmed as a multiple of Rated MVAR calculated from the rated MVA and rated power factor. Rated reactive power is calculated as follows: Rated Reactive Power = Rated MVA x sin($\cos^{-1}$(Rated Power Factor))

Rated MVA and Rated Power Factor are programmed under ***Setpoints*** > ***System*** > ***Generator***.

NEGATIVE VAR TRIP PICKUP

Range: 0.02 to 2.00 x Rated in steps of 0.01

Default: 0.80 x Rated

This setting specifies a pickup threshold for the negative var trip function.

POSITIVE VAR TRIP DELAY

Range: 0.00 to 600.00 s in steps of 0.01 s

Default: 10.00 s

This setting specifies a time delay for the positive var trip function. Once the 3-phase total reactive power exceeds the positive level for the duration of the Positive var Trip Delay time, a trip will occur indicating a positive var condition.

NEGATIVE VAR TRIP DELAY

Range: 0.00 to 600.00 s in steps of 0.01 s

Default: 1.00 s

This setting specifies a time delay for the negative var trip function.

TRIP RELAY X

Range: Operate, Do Not Operate

Default: Do Not Operate

ALARM FUNCTION

Range: Disabled, Alarm, Latched Alarm

Default: Disabled

This setting enables the Reactive Power alarm functionality.

POSITIVE VAR ALARM PICKUP

Range: 0.02 to 2.00 x Rated in steps of 0.01

Default: 0.85 x Rated

This setting is typically set at a level less than the Positive var Trip Pickup for the alarm function.

NEGATIVE VAR ALARM PICKUP

Range: 0.02 to 2.00 x Rated in steps of 0.01

Default: 0.85 x Rated

This setting specifies a pickup threshold for the negative var alarm function.

POSITIVE VAR ALARM DELAY

Range: 0.00 to 600.00 s in steps of 0.01 s

Default: 10.00 s

This setting specifies a time delay for the positive var alarm function.

NEGATIVE VAR ALARM DELAY

Range: 0.00 to 600.00 s in steps of 0.01 s

Default: 1.00 s

This setting specifies a time delay for the negative var alarm function.

ALARM RELAY X

Range: Operate, Do Not Operate

Default: Do Not Operate

BLOCK FROM ONLINE

Range: 0.00 to 5000.00 s in steps of 0.01 s

Default: 0.50 s

In a synchronous motor application, it may be desirable not to trip or alarm on reactive power until the speed of the machine is near the synchronous speed or the field has been applied. Therefore, this feature can be blocked upon the initiation of a motor start for a period of time specified by this setting. From that point forward, the reactive power trip and alarm elements are active. A value of zero for the block time indicates that the reactive power protection is active as soon as motor start is detected.

BLOCK

Range: Off, Any FlexLogic operand

Default: Off

EVENTS

Range: Disabled, Enabled

Default: Disabled

TARGETS

Range: Disabled, Self-reset, Latched

Default: Self-reset

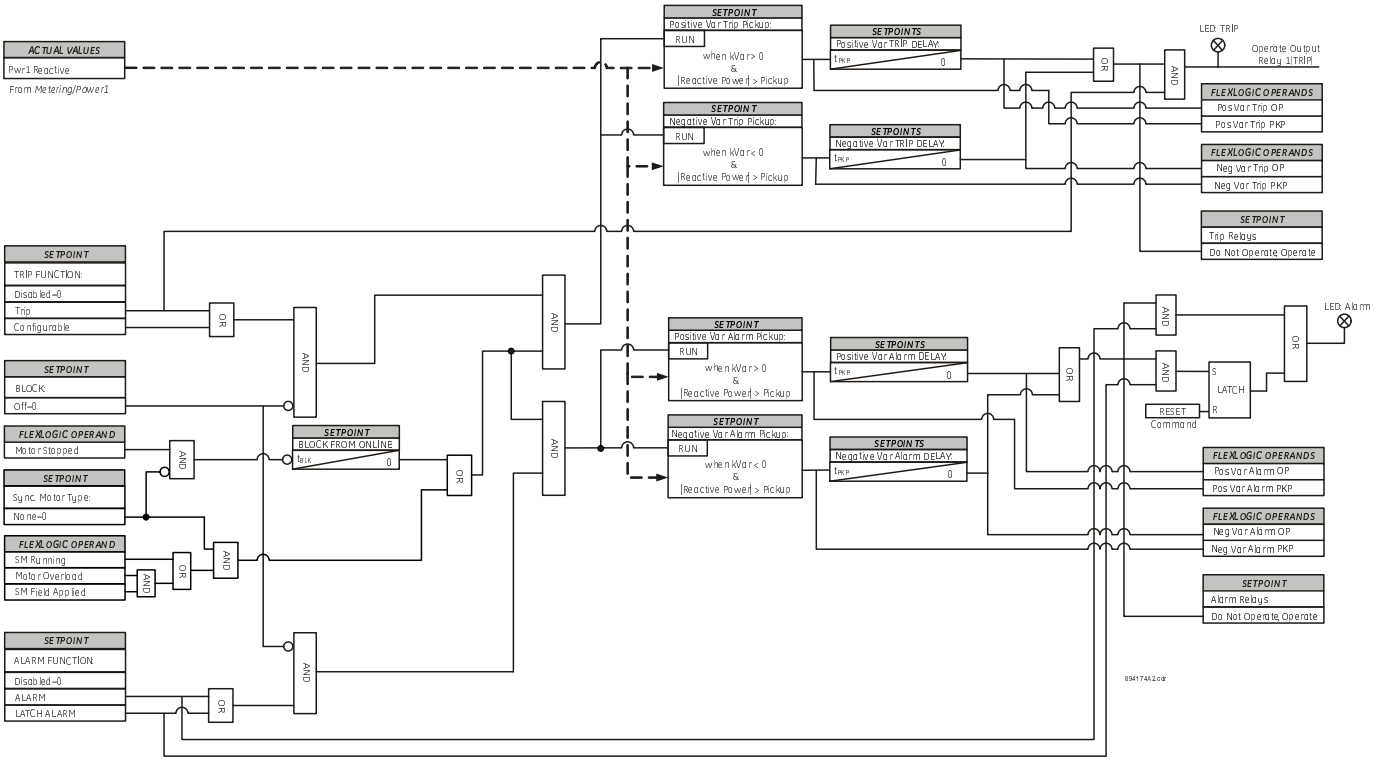

Figure 168: Reactive Power Logic Diagram

8.8 FREQUENCY ELEMENTS

8.8.1 UNDERFREQUENCY (81U)

The relay can be used as the primary detecting relay in automatic load-shedding schemes based on underfrequency. The need for such a relay arises if during a system disturbance, an area becomes electrically isolated from the main system and suffers a generation deficiency due to the loss of either transmission or generation facilities. If reserve generation is not available in the area, conditions of low system frequency occur which can lead to a complete collapse. The relay provides several identical Underfrequency (UNDERFREQ) elements per protection group, which can automatically disconnect sufficient load to restore an acceptable balance between load and generation. The Underfrequency element can be set as an instantaneous element with no time delay or as a definite time delayed element. The Underfrequency element has the programmable minimum operating thresholds to prevent undesired operation during periods of light load or unavailable voltage. The input voltages are the three phase-to-phase voltages from delta connected VTs (PTs), three phase-to-ground voltages from wye connected VTs (PTs), or single phase auxiliary voltage. The input currents are the three phase currents.

The Underfrequency Pickup flag is asserted when the measured frequency of the specified source is below the PKP value and the voltage and current are above the MINIMUM levels. The Underfrequency Trip flag is asserted if the element stays picked up for the time defined by the Pickup time delay. The element drops from Pickup without operation if the measured frequency rises above 0.03Hz of the Pickup value and stays dropped-out for the defined time delay before the time for operation is reached.

The minimum operating voltage setting selects the minimum voltage below which the element is blocked.

The minimum operating current setting selects the minimum current below which the element is blocked. Operation during periods of light load are prevented.

Path: ***Setpoints*** > ***Protection*** > ***Group 1(6)*** > ***Frequency*** > ***Underfrequency 1(X)***

FUNCTION

Range: Disabled, Trip, Alarm, Latched Alarm, Configurable

Note: Relays with firmware version 4 and later have a `Latched Trip` *option*

Default: Disabled

PICKUP

Range: 20.00 to 65.00 Hz in steps of 0.01 Hz

Default: 59 Hz

PICKUP DELAY

Range: 0.000 to 6000.000 s in steps of 0.001 s

Default: 2.000 s

DROPOUT DELAY

Range: 0.000 to 6000.000 s in steps of 0.001 s

Default: 2.000 s

Default: Ph VT Bnk1-J2

VT INPUT

Range: dependent upon the order code

Default: Ph VT Bnk1-J2 or LEA Bnk1-J2, Dependent on order code

MINIMUM VOLTAGE

Range: 0.000 to 1.250 x VT in steps of 0.001 x VT

Default: 0.700 x VT

The setting sets the minimum voltage for Underfrequency element operation specified per times VT. The setpoint prevents incorrect operation before energization of the source to the relay location, and during voltage dips.

> *Note:*
> *If the 3-phase VT uses a delta connection and **SIGNAL INPUT** is set to Ph VT Bnk1-J2, the positive sequence voltage is used as the supervision voltage. In such condition, the true supervision level is internally changed to 1/√3 of the user setting since the base of VT here is the phase-phase voltage.*

> *Note:*
> *If the 3-phase VT uses a delta connection, the positive sequence voltage is used as the supervision voltage. In such condition, the true supervision level is internally changed to 1/√3 of the user setting since the base of VT here is the phase-phase voltage.*

> *Note:*
> *When the source input for tracking frequency differs from that used for Under Frequency function, due to frequency variations, you may encounter notable voltage measurement errors as the frequency of input signal moves away from the tracking frequency source input. For instance, when the setting `Frequency Input' is configured to auxiliary voltage (from the 4th VT), while the tracking frequency comes from the main source's three-phase voltages, any difference between the frequency of the auxiliary voltage (Vx) and the three-phase voltages (3VT) leads to a magnitude measurement error in Vx, caused by the deviation of Vx frequency from the main frequency*

CT INPUT (not for 889)

Range: dependent upon the order code

Default: CT Bank 1-J1 or CT Bank 1-K1, dependent on order code

MINIMUM CURRENT

Range: 0.000 to 30.000 x CT in steps of 0.001 x CT

Default: 0.200 x CT

The setting sets the minimum value of current required on any phase to allow the Underfrequency element to operate. The setpoint is used to prevent underfrequency tripping during periods of light load, when this action would have an insignificant effect on the system. A setting of zero is suspend current supervision.

BLOCK

Range: Off, Any FlexLogic operand

Default: Off

OUTPUT RELAY X

Range: Operate, Do Not Operate

Default: Do Not Operate

EVENTS

Range: Enabled, Disabled

Default: Enabled

TARGETS

Range: Disabled, Self-reset, Latched

Default: Self-reset

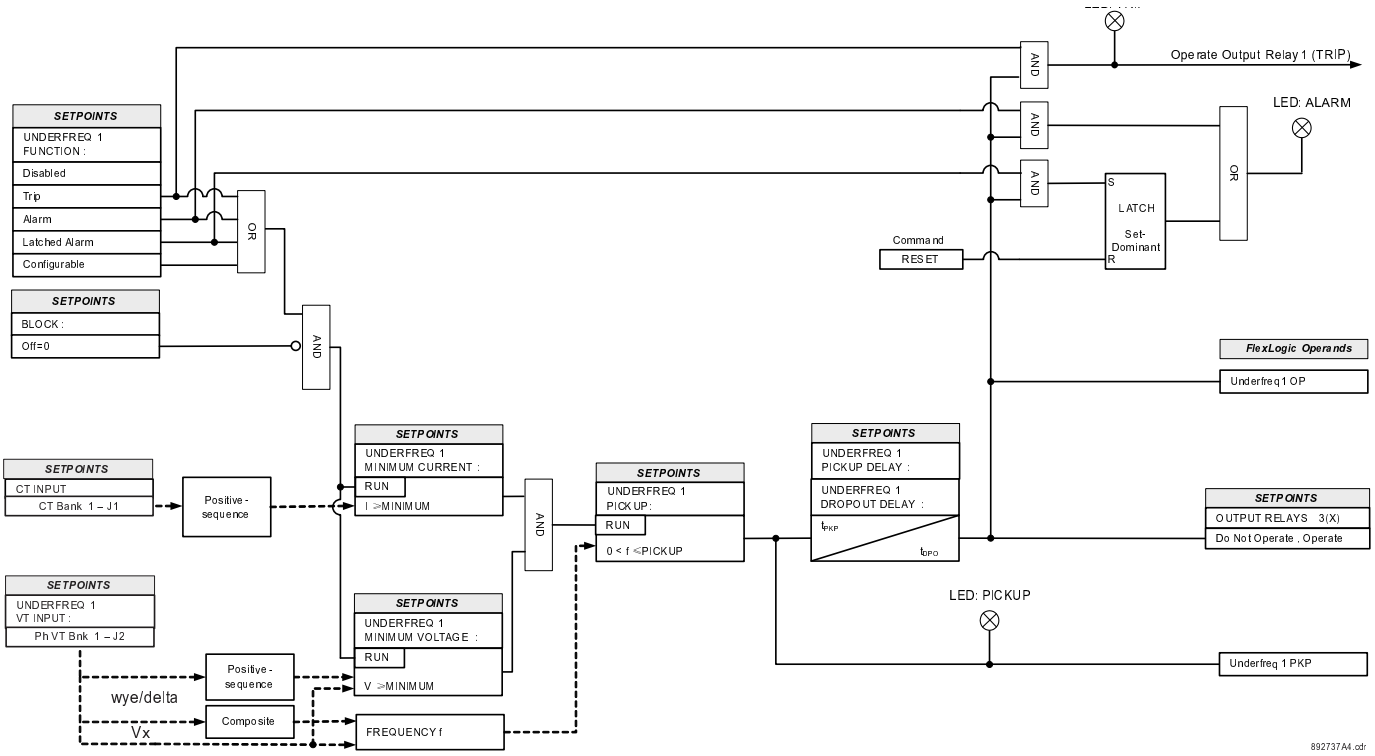

Figure 169: Underfrequency Protection logic diagram

8.8.2 OVERFREQUENCY (81O)

The relay provides several identical Overfrequency (OVERFREQ) elements per protection group.

A significant overfrequency condition, likely caused by a breaker opening and disconnecting load from a particular generation location, can be detected and used to quickly ramp the turbine speed back to normal. If this is not done, the over speed can lead to a turbine trip, which would then subsequently require a turbine start up before restoring the system. If the overfrequency turbine ramp down is successful, the system restoration can be much quicker. The overfrequency monitoring feature of the relay can be used for this purpose at a generating location.

The Overfrequency feature is inhibited from operating unless the magnitude of the positive sequence or auxiliary voltage rises above a threshold. When the supply source is energized, the overfrequency delay timer is allowed to start timing only when the threshold is exceeded and the frequency is above the programmed Pickup level. In the same way, when an overfrequency condition starts the overfrequency delay timer and the voltage falls below the threshold before the timer has expired, the element resets without operating.

The Overfrequency element may be set as an instantaneous element with no time delay, or as a definite time delayed element. The Overfrequency element has a fixed minimum operating threshold to prevent undesired operation during periods of unavailable voltage. The input voltages are the three phase-to-phase voltages from delta connected VTs (PTs), three phase-to-ground voltages from wye connected VTs (PTs), or single phase auxiliary voltage.

The settings of this function are applied to each source to produce Pickup and Operate flags. The Overfrequency Pickup flag is asserted when the measured frequency of the specified source is above the PKP value and the voltage is above the threshold. The Overfrequency Operate flag is asserted if the element stays picked up for the

time defined by the Pickup time delay. The element drops from Pickup without operation if the measured frequency decreases below 0.03 Hz of the Pickup value and stays dropped out for the defined time delay before the time for operation is reached.

The minimum operating voltage is set as a threshold below which the element is blocked.

Path: ***Setpoints*** > ***Protection*** > ***Group 1(6)*** > ***Frequency*** > ***Overfrequency 1(X)***

FUNCTION

Range: Disabled, Trip, Alarm, Latched Alarm, Configurable

Note: Relays with firmware version 4 and later have a `Latched Trip` *option*

Default: Disabled

SIGNAL INPUT

Range: dependent upon the order code

Default: Ph VT Bnk1-J2 or LEA Bnk1-J2, Dependent on order code

This setting provides selection of the frequency input.

PICKUP

Range: 20.00 to 65.00 Hz in steps of 0.01 Hz

Default: 59 Hz

PICKUP DELAY

Range: 0.000 to 6000.000 s in steps of 0.001 s

Default: 2.000 s

DROPOUT DELAY

Range: 0.000 to 6000.000 s in steps of 0.001 s

Default: 2.000 s

MINIMUM VOLTAGE

Range: 0.000 to 1.250 x VT in steps of 0.001 x VT

Default: 0.700 x VT

The setting sets the minimum voltage for Overfrequency element operation specified per times VT.

Note:
If the 3-phase VT uses a delta connection and SIGNAL INPUT is set to Ph VT Bnk1-J2, the positive sequence voltage is used as the supervision voltage. In such condition, the true supervision level is internally changed to $1/\sqrt{3}$ of the user setting since the base of VT here is the phase-phase voltage.

Note:
If the 3-phase VT uses a delta connection, the positive sequence voltage is used as the supervision voltage. In such condition, the true supervision level is internally changed to $1/\sqrt{3}$ of the user setting since the base of VT here is the phase-phase voltage.

Note:
When the source input for tracking frequency differs from that used for Under Frequency function, due to frequency variations, you may encounter notable voltage measurement errors as the frequency of input signal moves away from the tracking frequency source input. For instance, when the setting `Frequency Input' is configured to auxiliary voltage (from the 4th VT), while the tracking frequency comes from the main source's three-phase voltages, any difference between the frequency of the auxiliary voltage (Vx) and the three-phase voltages (3VT) leads to a magnitude measurement error in Vx, caused by the deviation of Vx frequency from the main frequency.

BLOCK

Range: Off, Any FlexLogic operand

Default: Off

OUTPUT RELAY X

Range: Operate, Do Not Operate

Default: Do Not Operate

EVENTS

Range: Enabled, Disabled

Default: Enabled

TARGETS

Range: Disabled, Self-reset, Latched

Default: Self-reset

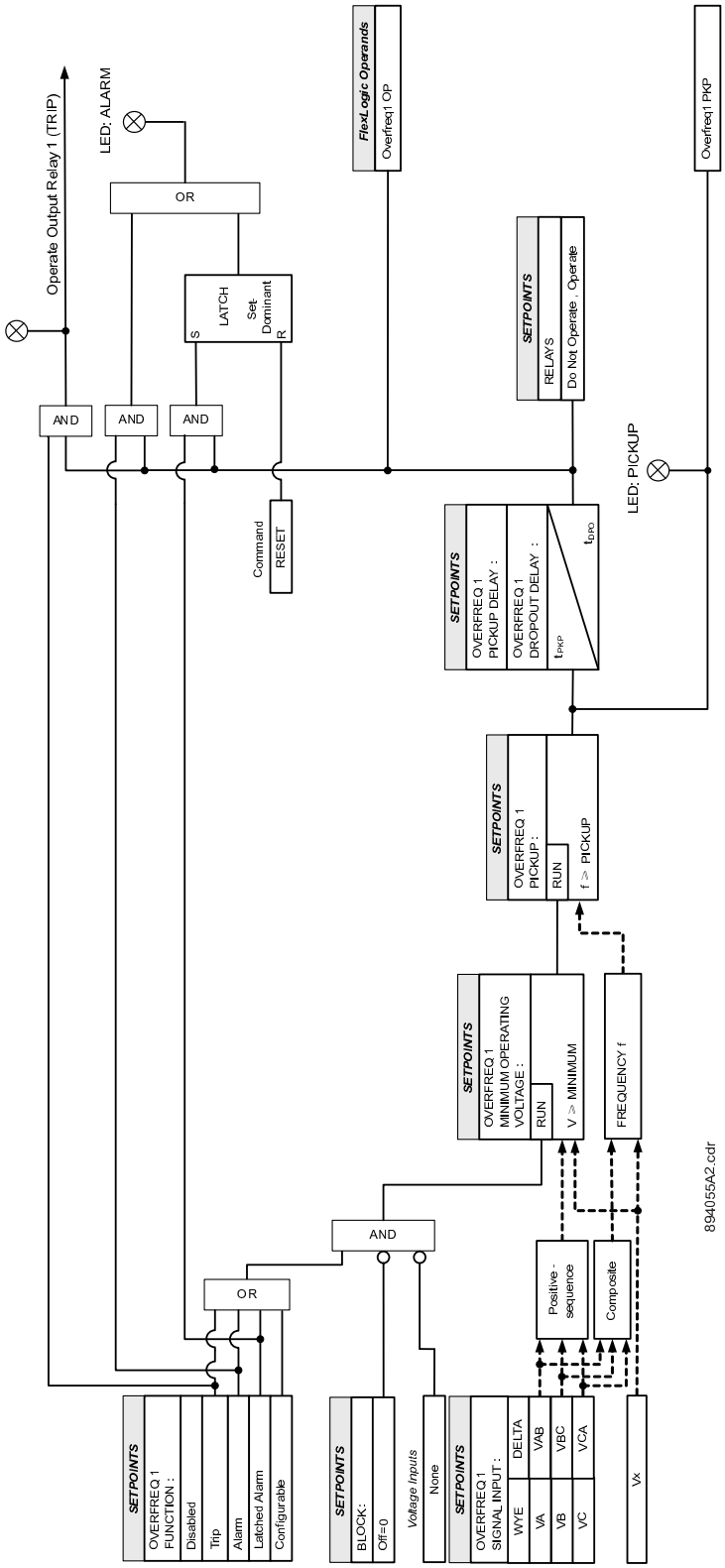

Figure 170: Overfrequency logic diagram

8.8.3 FREQUENCY RATE OF CHANGE (81R)

There is one Frequency Rate of Change protection element which can respond to rate of change of frequency with voltage, current and frequency supervision.

The Rate of Change element may be set as an instantaneous element with no time delay or as a definite time delayed element. The rate of change element has the programmable minimum operating voltage and current thresholds to prevent undesired operation under specific system conditions.

The settings of this function are applied to each source to produce Pickup and Trip flags.

The Frequency Rate of Change Pickup flag is asserted when the calculated frequency rate of change of the specified source is above the PKP value, the voltage and current are above the MINIMUM levels, and the frequency is within a certain range. The Frequency Rate of Change Trip flag is asserted if the element stays picked up for the time defined by the Pickup time delay. The element instantaneously drops from Pickup without operation, if the frequency rate of change drops below 96% of the Pickup value, before the time for operation is reached.

The minimum voltage and current thresholds select the minimum voltage and current below which the element is blocked.

The minimum and maximum frequencies set the operating frequency range out of which the element is blocked.

Path: ***Setpoints*** > ***Protection*** > ***Group 1(6)*** > ***Frequency*** > ***Frequency Rate of Change 1(X)***

FUNCTION

Range: Disabled, Trip, Alarm, Latched Alarm, Configurable

Note: Relays with firmware version 4 and later have a `Latched Trip` *option*

Default: Disabled

TREND

Range: Decreasing, Increasing, Bi-directional

Default: Decreasing

The setting allows configuring of the element to respond to increasing or decreasing frequency, or to a frequency change in either direction.

PICKUP

Range: 0.10 to 15.00 Hz/sec in steps of 0.01 Hz/sec

Default: 0.50 Hz/sec

The setting specifies an intended Pickup threshold.

For applications monitoring a decreasing trend, set ***TREND*** to `Decreasing` and specify the Pickup threshold accordingly. The operating condition is: -df/dt > PKP.

For applications monitoring an increasing trend, set ***TREND*** to `Increasing` and specify the pickup threshold accordingly. The operating condition is: df/dt > PKP.

For applications monitoring rate of change of frequency in any direction, set ***TREND*** to “Bi-Directional” and specify the Pickup threshold accordingly. The operating condition can be either of the above two conditions.

PICKUP DELAY

Range: 0.000 to 6000.000 s in steps of 0.001 s

Default: 2.000 s

This setting provides a definite Pickup time delay. Instantaneous operation is selected by a Pickup time delay setting of 0.000 s.

MINIMUM FREQUENCY

Range: 20.00 to 80.00 Hz in steps of 0.01 Hz

Default: 45.00 Hz

The setting defines the minimum frequency level required for operation of the element.

The setting may be used to effectively block the feature based on frequency. For example, if the intent is to monitor an increasing trend but only if the frequency is already above certain level, this setting is set to the required frequency level.

MAXIMUM FREQUENCY

Range: 20.00 to 80.00 Hz in steps of 0.01 Hz

Default: 65.00 Hz

The setting defines the maximum frequency level required for operation of the element.

The setting may be used to effectively block the feature based on frequency. For example, if the intent is to monitor a decreasing trend but only if the frequency is already below a certain level (such as for load shedding), this setting is set to the required frequency level.

VT INPUT

Range: dependent upon the order code

Default: Ph VT Bnk1-J2 or LEA Bnk1-J2, Dependent on order code

This setting provides selection of the frequency input.

MINIMUM VOLTAGE

Range: 0.000 to 1.250 x VT in steps of 0.001 x VT

Default: 0.700 x VT

The setting defines the minimum voltage level required for operation of the element. The supervising function responds to the positive-sequence voltage. Overvoltage supervision is used to prevent operation under specific system conditions such as faults.

Note:
*If the 3-phase VT uses a delta connection and **FREQUENCY INPUT** is set to Ph VT Bnk1-J2, the positive sequence voltage is used as the supervision voltage. In such condition, the true supervision level is internally changed to 1/√3 of the user setting since the base of VT here is the phase-phase voltage.*

Note:
If the 3-phase VT uses a delta connection, the positive sequence voltage is used as the supervision voltage. In such condition, the true supervision level is internally changed to 1/√3 of the user setting since the base of VT here is the phase-phase voltage.

CT INPUT

Range: dependent upon the order code

Default: CT Bank1-J1 or CT Bank1-K1, dependent on order code

This setting provides the current bank selection for the minimum current setting.

MINIMUM CURRENT

Range: 0.000 to 30.000 x CT in steps of 0.001 x CT

Default: 0.200 x CT

This setting defines the minimum current level required for operation of the element. The supervising function responds to the positive-sequence current. Typical application includes load shedding. Set the Pickup threshold to zero if no overcurrent supervision is required. The setting of zero suspends the current supervision.

BLOCK

Range: Off, Any FlexLogic operand

Default: Off

The element will be blocked when the selected operand is asserted.

OUTPUT RELAYS

Range: Operate, Do Not Operate

Default: Do Not Operate

Each relay can be selected to become either energized or de-energized when operated, and to operate as latched, self-resetting or pulsed.

EVENTS

Range: Enabled, Disabled

Default: Enabled

The selection of the Enabled setting enables the events of the function.

TARGETS

Range: Disabled, Self-reset, Latched

Default: Self-reset

This setting is used to define the operation of an element target message. When disabled, no target message is issued upon operation of the element. When set to `Self-Reset`, the target message and its LED indication follow the operate state of the element, and self-reset once the operate element condition clears. When set to `Latched`, the target message will remain visible after the element output returns to logic 0 until a RESET command is received by the relay.

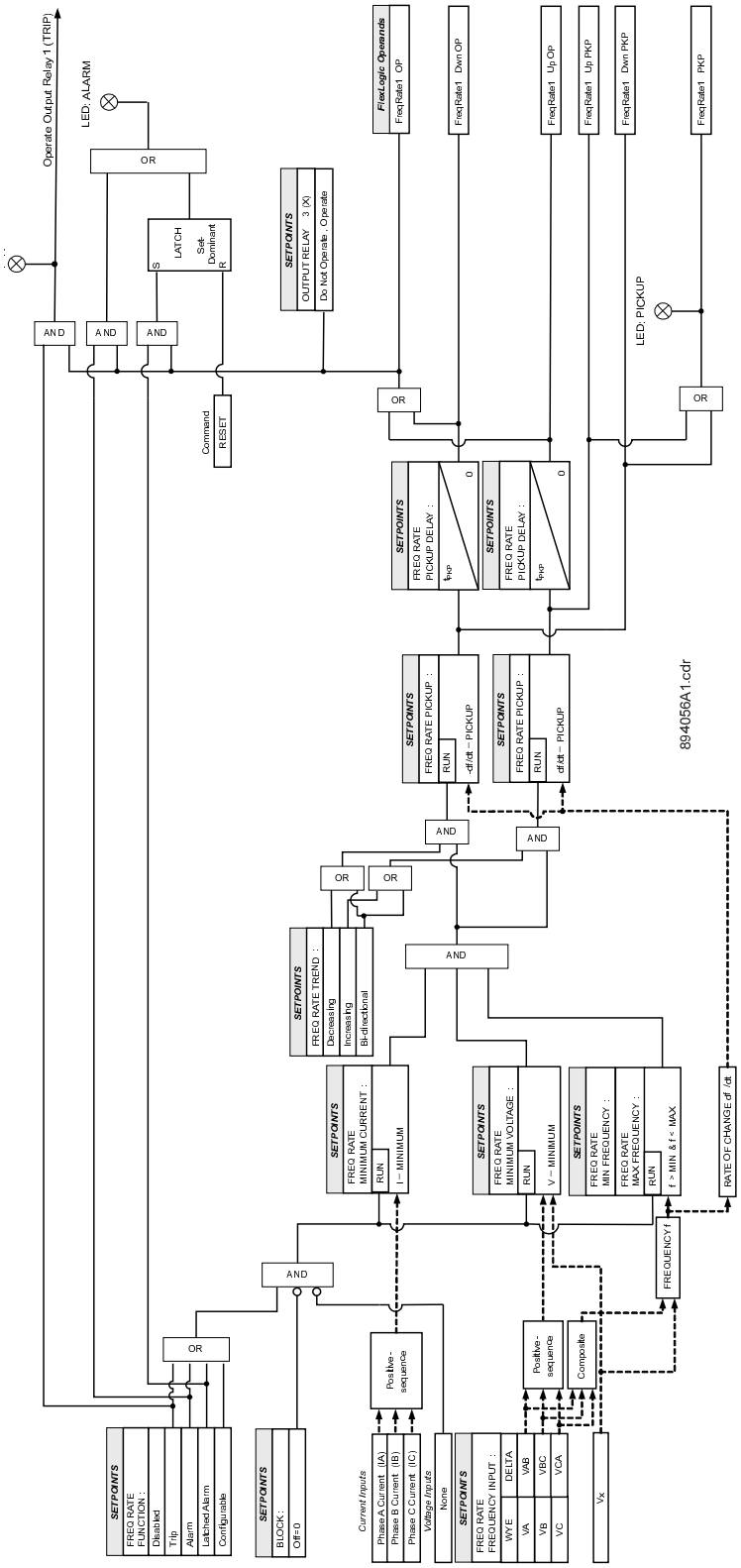

Figure 171: Frequency Rate-of-Change Protection logic diagram

CHAPTER 9

MONITORING

9.1 CHAPTER OVERVIEW

This chapter contains the following sections:

Chapter Overview	424
Monitoring Overview	425
Generator Monitoring	426
Breaker monitoring	440
Functions	453
Harmonic Detection	468
Resistance Temperature Detector Functions	471
Loss of Communications	477

9.2 MONITORING OVERVIEW

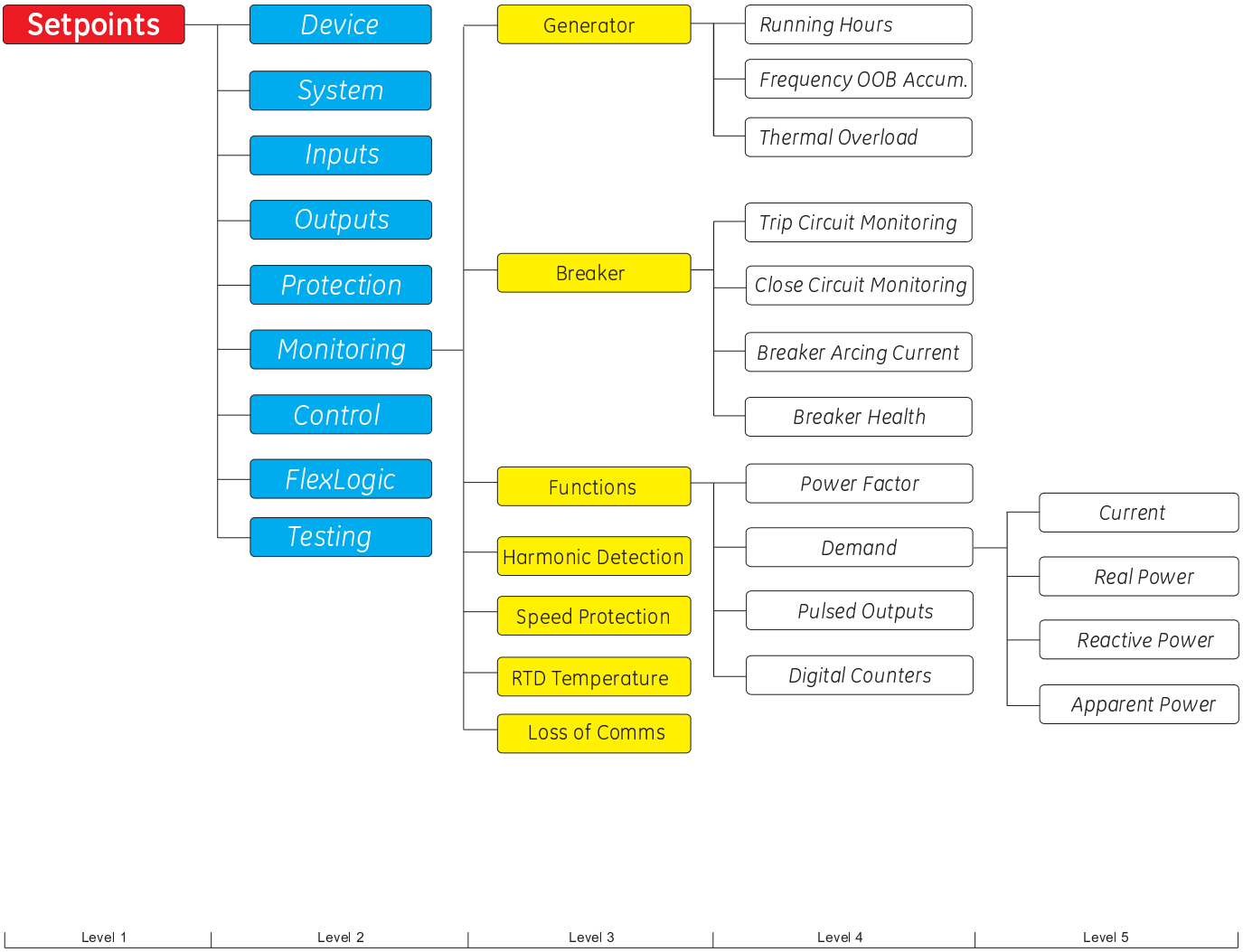

Figure 172: Monitoring Display Hierarchy

9.3 GENERATOR MONITORING

9.3.1 RUNNING HOURS

The relay can calculate/accumulate generator running hours, which may be of interest for periodic maintenance. Since running hour calculations do not rely on external/special input (Tachometer), it basically utilizes generator terminal voltage and frequency measurement, and hence, Running hours is always available (as a generator metering value). Running Hours are accumulated if the generator terminal positive sequence voltage (Slot-J V1) is above 0.5 x VT and frequency is above 10 Hz. Initial running hours can be added in case if generator has existing runtime value. In case if total running hours exceed the use-setting limit, the function would alarm the condition.

Path: ***Setpoints*** > ***Monitoring*** > ***Generator*** > ***Running Hours***

FUNCTION

Range: Disabled, Alarm, Latched Alarm, Configurable

Default: Disabled

INITIAL RUN HRS

Range: 0 to 999,999 hrs in steps of 1 hr

Default: 0 hrs

This setting allows the user to program existing accumulated running hours on the generator the relay is protecting. In order to apply initial running hours, the current generator running hours should be cleared to zero. Once applied, the running hours are calculated starting from this initial value.

> *Note:*
> *In order to apply the initial running hours, first clear the Running hours using* ***Records > Clear Records > Clear Running Hours****. Upon execution of "Clear Running Hours" command, the value set in this INITIAL RUN HRS will be initialized in the running hour counter.*

RUN HRS LIMIT

Range: 1 to 1000,000 hrs in steps of 1 hr

Default: 1000 hrs

This setting specifies the maximum hours after which a Running Hour Alarm is generated.

OUTPUT RELAY

Range: Do Not Operate, Operate

Default: Do Not Operate

BLOCK

Range: Off, Any FlexLogic operand

Default: Off

EVENT

Range: Enabled, Disabled

Default: Disabled

TARGET

Range: Self-reset, Latched, DIsabled

Default: Self-reset

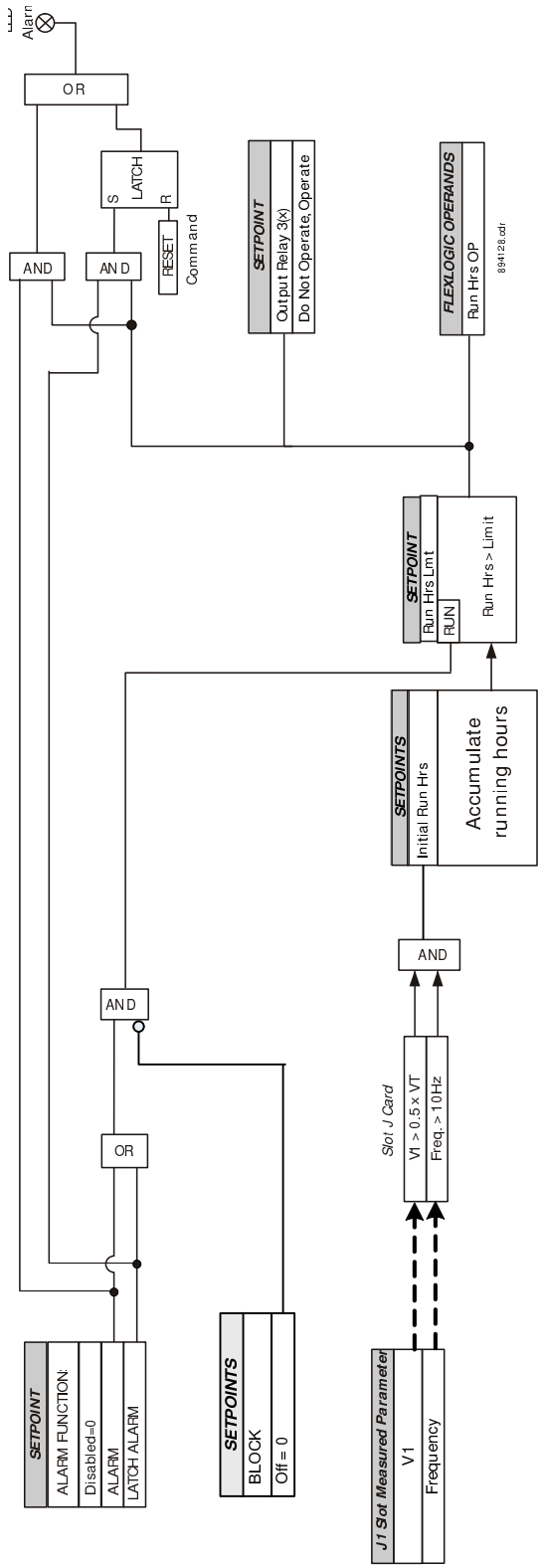

Figure 173: Running Hours Logic Diagram

9.3.2 FREQUENCY OUT-OF-BAND ACCUMULATION (81A)

A generator turbine is designed to operate within a specific frequency and speed range (around the nominal), typically ±5%. During load rejection or coast down, the generator turbine may operate at a higher speed (frequency) or lower speed (frequency) respectively, which is outside of the normal operation frequency band. In these conditions, the turbine will pass through operating frequencies where the turbine blades find stimulus at their natural frequencies. Blade vibrations at these natural frequencies result in stress on the blades that is accumulated, and can result in cracking in some parts of the blade structure such as the tie wires or blade covers. The Frequency Out-Of-Band (OOB) Accumulation feature provides diagnostic information and alarms based on the accumulated off-nominal (out-of-band) frequency operation time of a turbine over several frequency bands. This alarm can be used to schedule maintenance or other actions as desired. The available setting of an upper and lower frequency for each band enables the user to overlap bands of frequencies in the accumulation function. The accumulation function can be blocked as desired. For example, accumulation may be blocked during an out-of-service condition or during testing as set via an input to the relay.

The following General settings are available to all accumulators.

Path: ***Setpoints*** > ***Monitoring*** > ***Generator*** > ***Frequency OOB Accumulation*** > ***General***

MINIMUM VOLTAGE

Range: 0.10 to 1.25 x VT in steps of 0.01 x VT

Default: 0.10 x VT

This setting specifies the minimum positive-sequence voltage level required to allow the frequency out-of-band accumulators to operate. This threshold is used to prevent an incorrect accumulation when operating quantity is too low.

RESET ACCUMULATORS

Range: Off, Any FlexLogic operand

Default: Off

Frequency OOB accumulators can be reset to zero using any FlexLogic operand.

> *Note:*
> *Using Virtual Input with the Self-reset option is not recommended. Any FlexLogic operand selected as a reset input should remain high for at least two power cycles.*

BLOCK

Range: Off, Any FlexLogic operand

Default: Off

This setting selects a FlexLogic operand to block out-of-band frequency accumulation ina ll bands/accumulators. This is typically required to avoid unnecessary accumulation when relay testing is being performed.

EVENT

Range: Enabled, Disabled

Default: Disabled

TARGET

Range: Self-reset, Latched, Disabled

Default: Self-reset

The following individual settings are available for each of the seven frequency out-of-band accumulators.

Path: ***Setpoints*** > ***Monitoring*** > ***Generator*** > ***Frequency OOB Accumulation*** > ***Accum 1(7)***

FUNCTION

Range: Disabled, ALarm, Latched Alarm, Configurable

Default: Disabled

This setting enables and disables a specific frequency band accumulator.

UPPER FREQUENCY

Range: 5.00 to 70.00 Hz in steps of 0.01 Hz

Default: 60.00 Hz

This setting specifies the upper frequency value, in Hz, below which Accumulator 1(7) starts accumulating time and asserts the PKP operand. This upper frequency value must be greater than the lower frequency value.

LOWER FREQUENCY

Range: 5.00 to 70.00 Hz in steps of 0.01 Hz

Default: 60.00 Hz

This setting specifies the lower frequency value, in Hz, above which Accumulator 1(7) starts accumulating time and asserts the PKP operand. This lower frequency value must be less than the upper frequency value.

TIME LIMIT

Range: 1 to 100000 s in steps of 1 s

Default: 200 s

This setting specifies the accumulating time limit (in seconds) above which this function asserts the OP operand.

TIME PRESET

Range: 0 to 100000 s in steps of 1 s

Default: 0 s

This setting allows the user to initialize or preset the accumulator time (in seconds) in case this value is known from previous operation of a turbine.

> *Note:*
> *The TIME PRESET value must be higher than the current accumulator value in order to Preset.*

OUTPUT RELAY

Range: Do Not Operate, Operate

Default: Do Not Operate

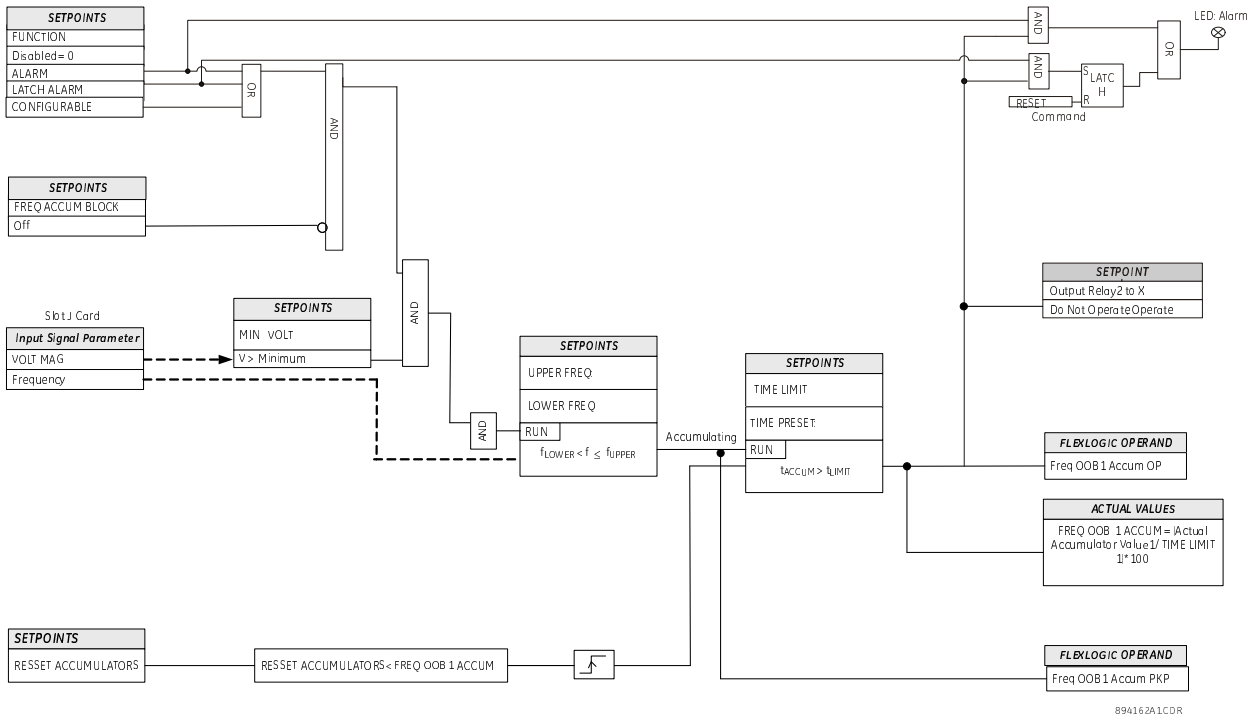

Figure 174: Frequency OOB Accumulation (with Accumulator 1) Logic Diagram

9.3.3 THERMAL OVERLOAD PROTECTION (49TOL)

The thermal overload protection element corresponds to the IEC 255-8 standard and is used to detect thermal overload conditions in protected power system elements. Choosing an appropriate time constant, the thermal overload protection element can be used to protect different elements of the power system. The cold curve characteristic is applied when the previous averaged load current over the last 5 cycles is less than 10% of the base current. If this current is greater or equal to 10% of the base current, then the hot curve characteristic is applied.

The IEC255-8 cold curve operate time is defined as follows (EQN 1):

$$t_{op} = \tau_{op} \text{ x } \ln \{I^2 / (I^2-(k.I_b)^2\}$$

The IEC255-8 hot curve operate time is defined as follows (EQN 2):

$$t_{op} = \tau_{op} \text{ x } \ln \{(I^2 - I_p^2) / (I^2-(k.I_b)^2\}$$

where:

- t_{op} = time to operate
- τ_{op} = operate time constant
- I = measured overload RMS current
- I_p = measured load RMS current before overload occurs
- k = IEC 255-8 k-factor applied to Ib, defining maximum permissible current above nominal current
- I_b = protected element base (nominal) current or full load current (FLA)

For example, when this element is used for the generator overload protection, I_b is the generator rated current calculate from the Rated MVA and Rated Voltage set under **Path**: ***Setpoints*** > ***System*** > ***Generator*** > ***General***.

I_b is calculated as follows (EQN 3):

$$I_b = \text{Rated MVA} / \sqrt{3}(\text{Rated Voltage})$$

The square of the load RMS current (Ip), in EQN 2, represents the thermal capacity before overload occurs, as determined by EQN 6. Therefore, the trip time obtained from the IEC hot curve takes into account the percentage of thermal capacity that has already been used. The cold curve characteristic is applied when the previous averaged load current over the last 5 cycles is less than 10% of the base current. If this current is greater or equal to 10% of the base current, then the hot curve characteristic is applied.

The reset time of the thermal overload protection element is also time delayed using following formula (EQN 4):

$$t_{reset} = \tau_{reset} \text{ x } \ln \{(k.I_b)^2 / (I^2-(k.I_b)^2\} + T_{min}$$

where:

- t_{Reset} = time to reset
- τ_{Reset} = reset time constant
- T_{min} = minimum reset time setting

In some applications, the shape of the power system element thermal damage curve substantially deviates from the standard IEC curve. It may be necessary to use a custom curve in order to incorporate the exact match of the actual overload damage curve without compromising protection. For these conditions, it is recommended that the FlexCurves be used. FlexCurves allows the user to program selected operate (t_{op}) and reset time (t_{Reset}) for pre-determined current levels.

The relay incorporates four programmable FlexCurves™ - FlexCurve A, B, C and D. The points for these curves are defined by the user in EnerVista D&I Setup software. User-defined curves can be used for thermal overload protection in the same way as IEC curves. Each of the four FlexCurves™ has 120-point settings for entering times to reset and operate; 40 points for reset (from 0 to 0.98 times the Pickup value) and 80 for operate (from 1.03 to 20 times the Pickup value).

Note:
The equations shown above (EQN1, 2, 3, 4) are not applicable when a setpoint Overload Curve is programmed as a FlexCurve.

Once the load current exceeds the overload level (k x I_b), it enters an overload phase; that is, heat accumulation becomes greater than heat dissipation. The thermal overload element reacts by incrementing the thermal capacity used (TCU) at a rate dependent on the selected thermal curve and overload level. When the accumulated thermal capacity reaches 100%, the Thermal OL OP operand is set. This operand remains asserted until it is reset.

The thermal overload protection element estimates thermal capacity used TCU using the following equations calculated each power cycle. When current is greater than the pickup level, I > k x I_b, element starts increasing the thermal capacity (EQN 5):

$$TCU_n = TCU_{(n-1)} + \frac{\Delta t}{t_{op}} x100\%$$

When current is less than the dropout level, |I < 0.97 x k x Ib|, the element starts decreasing the thermal capacity (EQN 6):

$$TCU_n = TCU_{n-1} - \frac{\Delta t}{t_{Reset}} x100\%$$

where:

- TCU_n = thermal capacity used at index n
- TCU_{n-1} = thermal capacity used at index n - 1
- Δt = power cycle duration

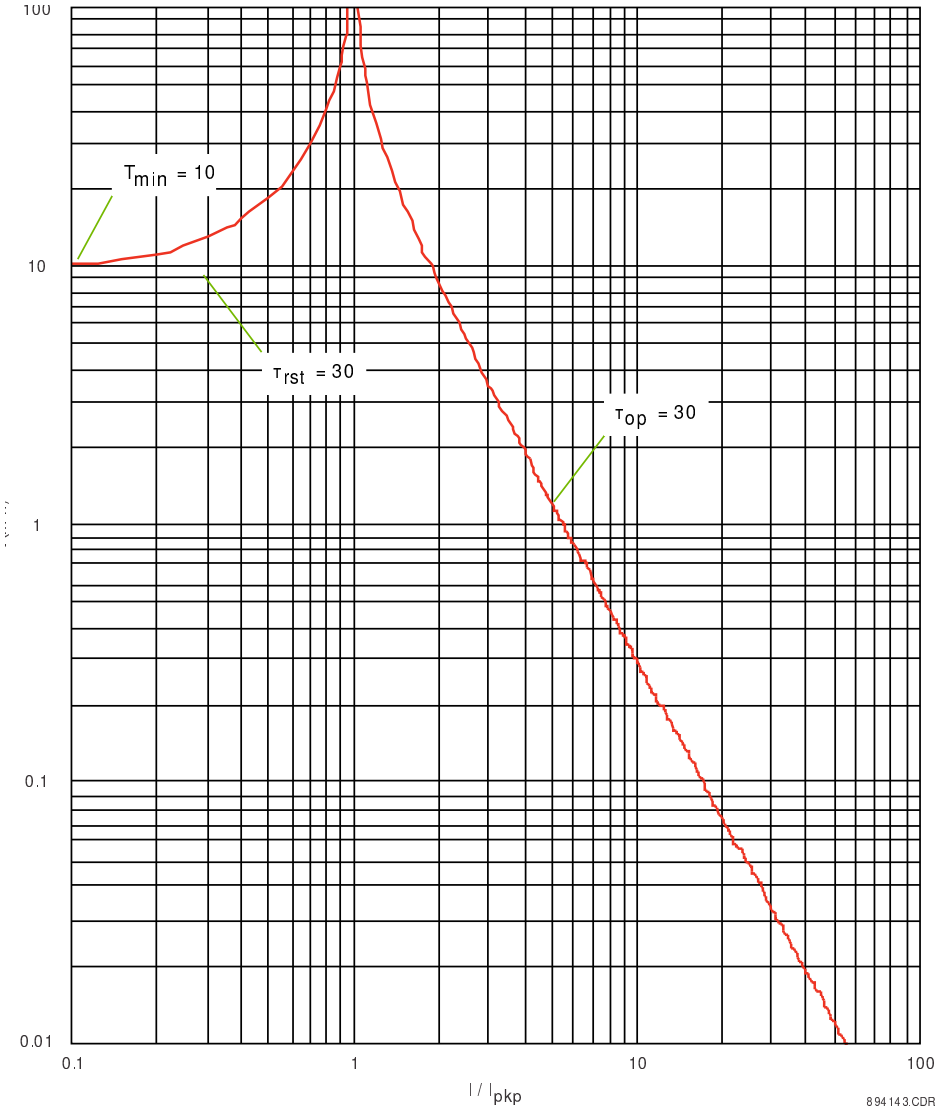

Figure 175: IEC 255-8 Sample Operate and Reset Curves

The thermal overload protection element removes the Thermal OP output operand when E < 5%. In case of emergency, the thermal memory and Thermal OP output operand can be reset using the FlexLogic operand programmed under the Thermal Reset setting.

All calculations are performed per phase. If the accumulated thermal capacity reaches a value of 100% in any phase, the thermal overload protection element operates, and only resets when thermal capacity is less than 5% in all three phases.

Path: ***Setpoints*** > ***Monitoring*** > ***Thermal Overload Protection***

FUNCTION

Range: Disabled, Alarm, Latched Alarm, Configurable

Default: Disabled

This setting enables the Thermal Overload functionality.

SIGNAL INPUT

Range: dependent upon the order code

Default: CT Bank 1-J1

This setting provides the selection for the 3-Phase CT bank inputs. This setting allows applying this element either on the terminal side or neutral side of the Generator.

k-FACTOR

Range: 1.00 to 1.50 in steps of 0.01

Default: 1.10

This setting defines the current level at which the power system element is considered to be overloaded. If the current exceeds the k x I_b threshold, the thermal overload protection reacts by accumulating thermal capacity.

OVERLOAD CURVE

Range: IEC, FlexCurve A, FlexCurve B, FlexCurve C, FlexCurve D

Default: IEC

The thermal overload curve determines the thermal limit overload conditions that can damage the power system element. The overload curve can take one of five formats: IEC, FlexCurve A, FlexCurve B, FlexCurve C, or FlexCurve.

OPERATE TIME CONSTANT

Range: 0.0 to 1000.0 min in steps of 0.1 min

Default: 45 min

This setting specifies thermal operate time constant for IEC curves as defined by the IEC 255-8 standard equations (EQN 1 & 2). When the IEC curves are selected, the thermal overload element calculates the time to operate (top) using the IEC255-8 cold curve and IEC255-8 hot curve equations, and increases thermal capacity as defined by the equation EQN 5.

TD MULTIPLIER

Range: 0.00 to 600.00 in steps of 0.01 when the thermal model curve is a FlexCurve

Default: 1.00

This setting is only applicable when the Overload Curve setting is programmed as one of the FlexCurves (A, B, C, or D). TD Multiplier is used to shift the overload curve on the time axis to create a family of the different curves. The TD Multiplier value is used to select the curve that best matches the thermal characteristics of the protected power system element.

This setting allows the selection of a multiple of the base curve shape (where the time dial multiplier = 1) with the curve shape setting. For example, all times for a TDM = 10 are ten times the multiplier 1, or base curve values.

RESET TIME CONSTANT

Range: 0.0 to 1000.0 min in steps of 0.1 min

Default: 45 min

This setting specifies the thermal reset rime constant for IEC curves, to determine the reset time using EQN 4 to reset the thermal overload protection.

MIN RESET TIME

Range: 0.0 to 1000.0 min in steps of 0.1 min

Default: 10.0 min

This setting specifies the minimum time to reset the thermal overload protection. This setting is only applicable to IEC curves.

THERMAL RESET

Range: Off, Any FlexLogic operand

Default: Off

In case of emergency, the thermal memory and thermal OP output operand can be reset using the Thermal Reset operand.

BLOCK

Range: Off, Any FlexLogic operand

Default: Off

The thermal overload protection can be blocked by any asserted FlexLogic™ operand.

RELAYS

Range: Do Not Operate, Operate

Default: Do Not Operate

Any assignable output relay can be selected to operate upon Thermal Protection operation.

EVENTS

Range: Disabled, Enabled

Default: Enabled

TARGETS

Range: Disabled, Self-reset, Latched

Default: Self-reset

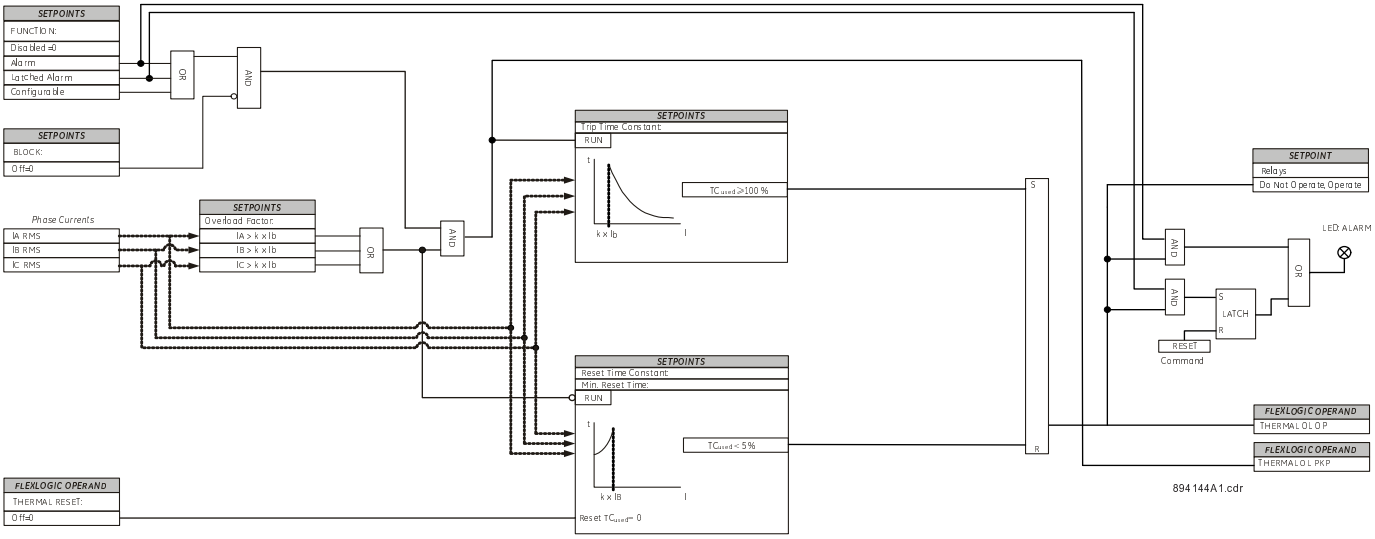

Figure 176: Thermal Model Logic Diagram

9.3.4 SPEED

The relay is capable of measuring the motor/generator speed. Any of the input contacts can be used to read the pulses from the input source. The source of the pulses can be an inductive proximity probe or Hall Effect gear tooth sensor. The speed algorithm calculates the number of pulses in the window length (WL) and converts it into an RPM value. A minimum pulse width of 10% of a revolution is required to detect a pulse from the pulse source.

The following equation is used to calculate the speed based on the detection of the number of pulses N during window length WL.

$$RPM = \frac{N}{PPR} \cdot \frac{60}{WL} \cdot f$$

Where:

- N – number of pulses during time defined by the Cal. Window Length (WL)
- PPR – pulses per revolution defined by setpoint ***PULSES PER REV*** (PPR)f – system frequency
- WL – calculated window length in cycles is defined as: WL = (60 x f) / (PPR x 50)
- This element has two modes of speed: under speed and over speed which is defined by the setpoint ***DIRECTION***.

In the under speed mode, a trip and alarm is configured so that the machine must be at a certain speed within a set period of time from starting. The trip and alarm features are configured so that the specified speed (***TRIP PICKUP*** or ***ALARM PICKUP***) must be reached in the specified time (***TRIP DELAY*** or ***ALARM DELAY***) otherwise the element operates. Initially, the time delay begins when the machine starts rotating and resets when the desired speed is reached. Once the machine is running with the rated speed and then that speed drops below the set threshold, the time delay restarts and the designated output contact will operate if the machine fails to reach the set speed in the allotted time.

In the over speed mode, the tachometer trip and alarm features are configured so that if the specified speed (***TRIP PICKUP*** or ***ALARM PICKUP***) is exceeded for the specified time (***TRIP DELAY*** or ***ALARM DELAY***), the element operates. Initially, the time delay begins when the machine speed exceeds the pickup value resets when the speed drops below the pickup.

Path: ***Setpoints*** > ***Monitoring*** > ***Speed***

TRIP FUNCTION

Range: Disabled, Trip, Configurable

Note: Relays with firmware version 4 and later have a Latched Trip option

Default: Disabled

This setting enables the Speed protection Trip functionality.

INPUT

Range: Off, Any Digital Input

Default: Off

Any of the digital input contacts can be used to read the pulses from the input source. For example, an inductive proximity probe or Hall Effect gear tooth sensor may be used to sense the key on the motor. The probe can be powered by the +24 V from the input switch power supply. The NPN transistor output can be sent to one of the digital inputs.

Note:
The voltage threshold must be set to 17 V for the inputs to be recognized using the internal +24 V.

The following figure illustrates wiring examples of PNP-type and NPN-type speed probes connected to the input terminals.

For illustration purposes, the breaker status inputs are shown along with the speed probe input.

Example a and b: Internal +24V supply is used to power both the speed probe connected to CI # 4 and breaker status signals (DRY type) connected to CI # 1 & 2 of the same Slot F.

Example c and d: Internal +24V supply is used to power the speed probe connected to CI # 4 while an external dc power supply is used by the breaker status signals (WET type) connected to CI # 1 and 2. In this example, since both speed probe and breaker status signals are connected to Slot F, the voltage threshold must be set to 17V.

> *Note:*
> *When the NPN type speed probe is used, the on/off state of the sensor input is reversed. When the probe sensor state is On (Closed), the relay sensor Input will indicate Off (Open) and when the probe sensor state is Off (Open), the relay sensor Input will indicate On (Closed). Thus, when the motor is stopped, the speed sensor input will be ON.*

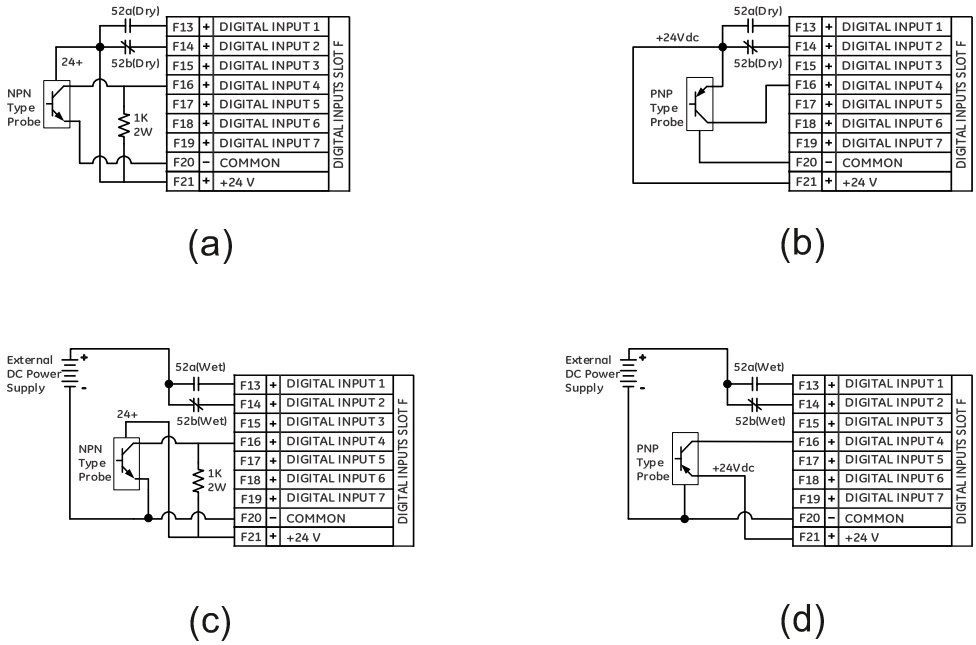

Figure 177: Wiring Examples of Speed Protection Input

> *Note:*
> *The maximum load current that can be delivered by the internal +24 V supply is 80 mA. When the internal +24 V supply is used to power the probe, the current limitations of the 24V supply must be considered.*

RATED SPEED

Range: 100 to 7200 RPM in steps of 1

Default: 3600 RPM

RPM defines the rated speed of the motor.

> *Note:*
> *This setting is located under* ***Setpoints*** > ***System*** > ***Generator Setup***

PULSES PER REV

Range: 1 to 6 PPR in steps of 1 PPR

Default: 1 PPR

The Number of pulses per revolution (PPR) is required to calculate the switching frequency of the input pulses. Switching frequency can be calculated as follows.

$$\text{Switching frequency} = (\text{PPR} \times \text{RPM}) / 60$$

Where:

PPR = pulses per revolution

RPM = rated speed

DIRECTION

Range: Underspeed, Overspeed

Default: Overspeed

This setting defines the mode for speed protection. When ***DIRECTION*** is set to Underspeed, the Trip and/or Alarm function picks up when the measured motor speed is below the set pickup level. Likewise, when the Direction is set to Overspeed, the Trip and/or Alarm function picks up when the measured speed is above the programmed pickup level.

TRIP PICKUP

Range: 20 to 120% in steps of 1

Default: 75%

This setting specifies a pickup threshold for the trip function.

TRIP PICKUP DELAY

Range: 0.00 to 600.00 s in steps of 0.01 s

Default: 1.00 s

This setting specifies a pickup threshold for the trip function.

TRIP OUTPUT RELAY X

Range: Do Not Operate, Operate

Default: Do Not Operate

ALARM FUNCTION

Range: Disabled, Alarm, Latched Alarm

Default: Disabled

This setting enables the speed protection Alarm functionality

ALARM PICKUP

Range: 20 to 120% in steps of 1

Default: 80%

This setting specifies a pickup threshold for the Alarm function.

ALARM PICKUP DELAY

Range: 0.00 to 600.00 s steps of 0.01 s

Default: 1.00 s

This setting specifies a time delay for the Alarm function.

ALARM OUTPUT RELAY X

Range: Do Not Operate, Operate

Default: Do Not Operate

BLOCK

Range: Off, Any FlexLogic operand

Default: Off

The Speed protection can be blocked by any asserted FlexLogic operand.

EVENTS

Range: Disabled, Enabled

Default: Enabled

TARGETS

Range: Disabled, Self-Reset, Latched

Default: Latched

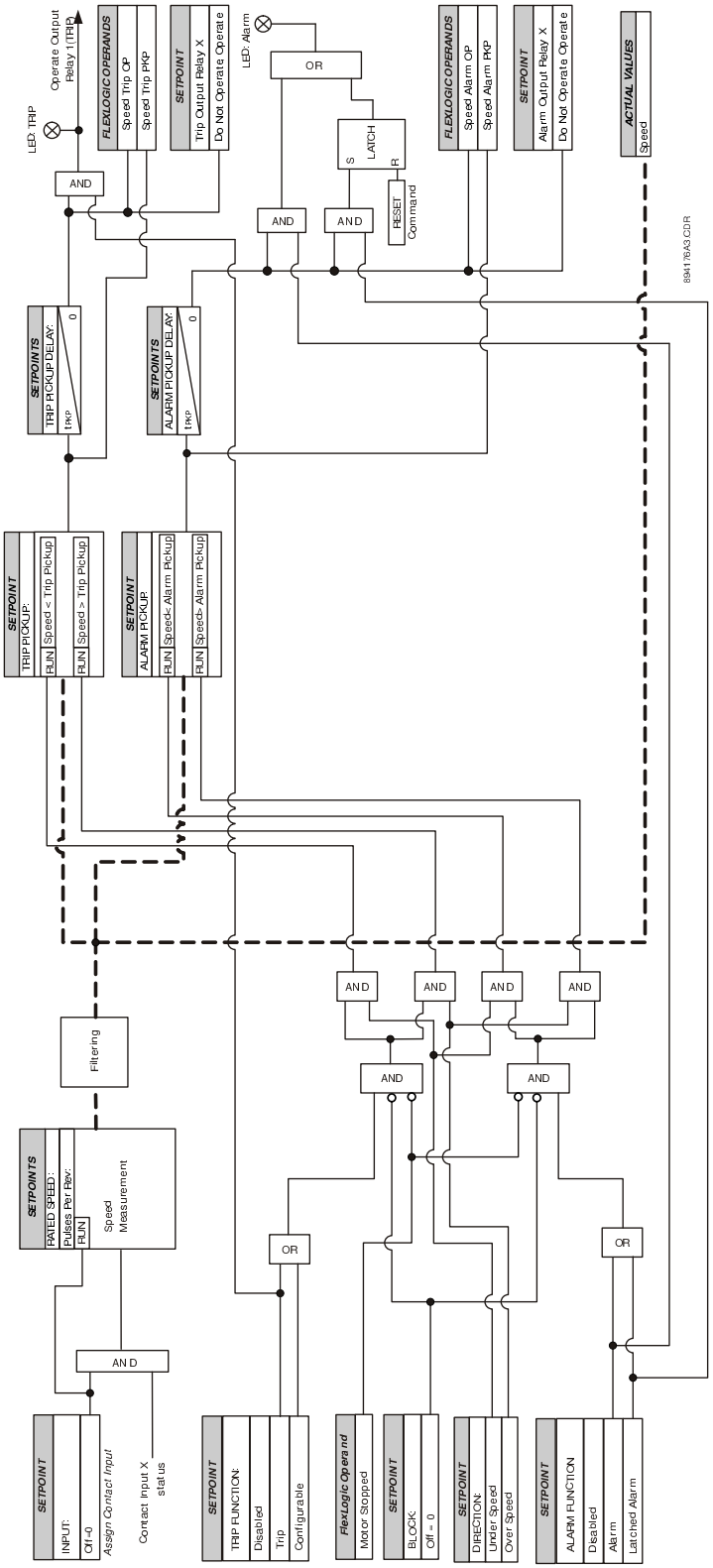

Figure 178: Speed Protection logic diagram

9.4 BREAKER MONITORING

9.4.1 TRIP AND CLOSE CIRCUIT MONITORING

The first and second Form A relay outputs on slot F include a circuit to monitor the DC voltage across the output contact when it is open. To do that, an external jumper is wired between the terminals **FA_1 COM** and **FA_1 OPT/V** for the Trip coil monitoring, or/and **FA_2 COM** and **FA_2 OPT/V** for the Close coil monitoring.

The monitor contains a level detector whose output is set to logic 1 (ON) when the voltage is above 20 volts. The voltage monitor is used to check the health of the overall trip and closing circuit.

The two figures below show the two different connections of the breaker trip and close coils to the relay's trip and close output relays for either no voltage monitoring and for voltage monitoring of the circuits.

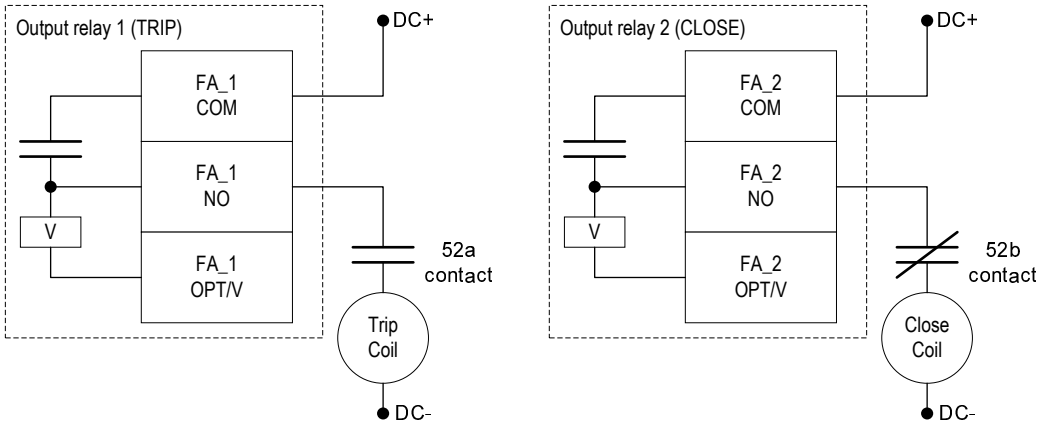

Figure 179: Coil Circuits without Monitoring

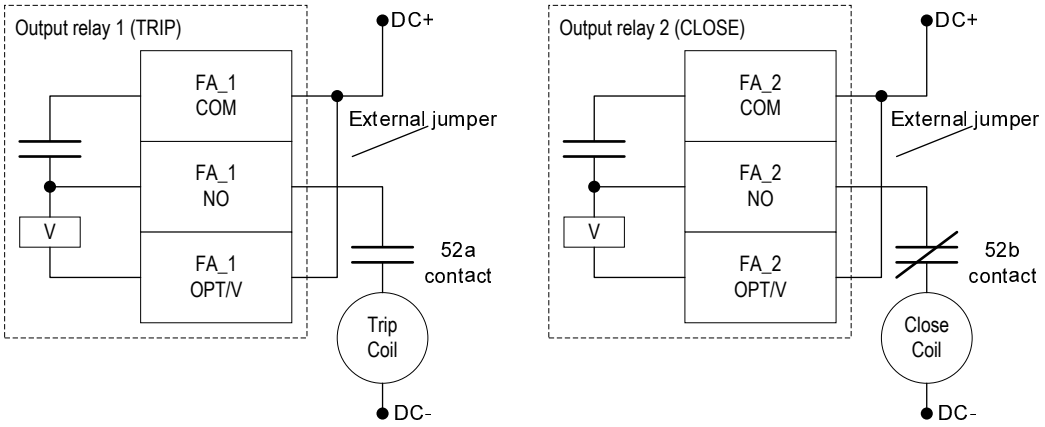

Figure 180: Coil Circuits with Monitoring

To monitor the trip coil circuit integrity, use the relay terminals FA_1 NO and FA_1 COM to connect the Trip coil, and provide a jumper between terminals FA_1 COM and FA_1 OPT/V (voltage monitor).

To monitor the close coil circuit integrity, use the relay terminals FA_2 NO and FA_2 COM to connect the Close coil and provide a jumper between terminals FA_2 COM and FA_2 OPT/V (voltage monitor).

Some applications require monitoring of the Trip coil or/and Close coil continuously, regardless of the breaker position (open or closed). This can be achieved by connecting a suitable resistor across the auxiliary contacts. With such connections, the trickle current is maintained by the resistor. For these applications the setting for the Bypass Breaker Status should be enabled.

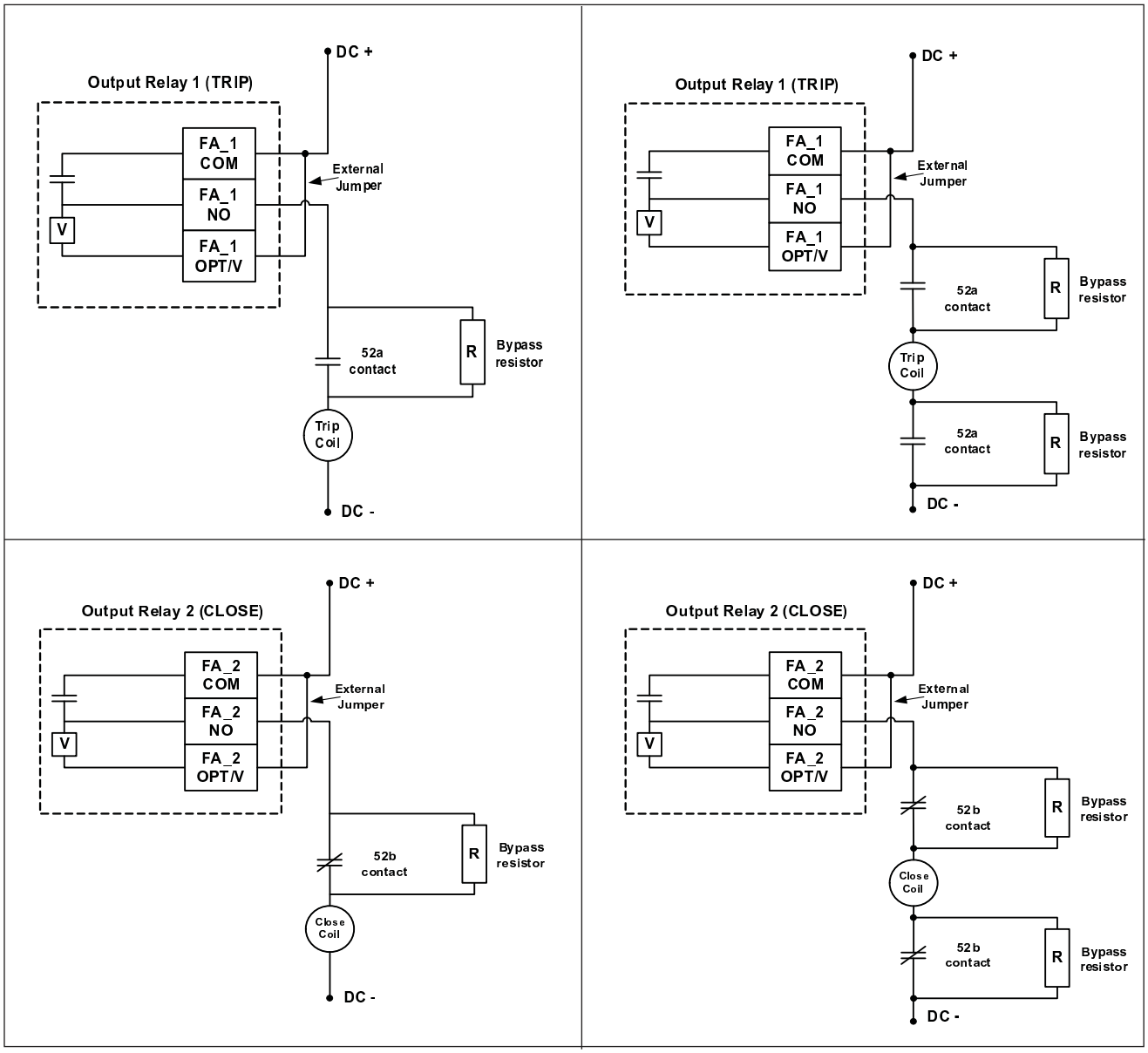

Figure 181: Trip and Close Coil Circuit with Continuous Monitoring

The value of the resistor is shown in the following table:

Power Supply (V DC)	Resistance (Ohms)	Power (Watts)
24	1000	2
48	10000	2
110	25000	5
125	25000	5
220	50000	5

Warning:
The Trip and Close Contacts must be considered unsafe to touch when the relay is energized.

Path: ***Setpoints*** > ***Monitoring*** > ***Breaker 1*** > ***Trip Circuit Monitoring***

TRIP CIRCUIT MONITORING

FUNCTION:

Range: Disabled, Latched Alarm, Alarm, Configurable

Default: Disabled

PICKUP DELAY:

Range: 0.000 to 6000.000 s in steps of 0.001 s

Default: 10.000 s

DROPOUT DELAY:

Range: 0.000 to 6000.000 s in steps of 0.001 s

Default: 0.000 s

This setting provides selection for reset time delay used to delay the dropout of the detection of the TCM element.

TRIP RELAY SELECT:

Default: Relay 1

Range: Off, Relay X

Any output relay from the list of available output relays can be programmed for breaker tripping coil monitoring.

> *Note:*
> *It is recommended to select the same Trip Relay set under the "Breaker: Trip Relay Select" option.*

BYPASS BREAKER STATE:

Range: Enabled, Disabled

Default: Disabled

Set the Bypass Breaker State to Enabled when a by-pass resistor is connected across the breaker auxiliary contact for continuous Trip circuit monitoring. The circuits are monitored regardless of breaker position.

BLOCK:

Range: Off, Any FlexLogic operand

Default: Off

OUTPUT RELAY X

Range: Do Not Operate, Operate

Default: Do Not Operate

EVENTS:

Range: Disabled, Enabled

Default: Enabled

TARGETS:

Default: Self-reset

Range: Disabled, Self-reset, Latched

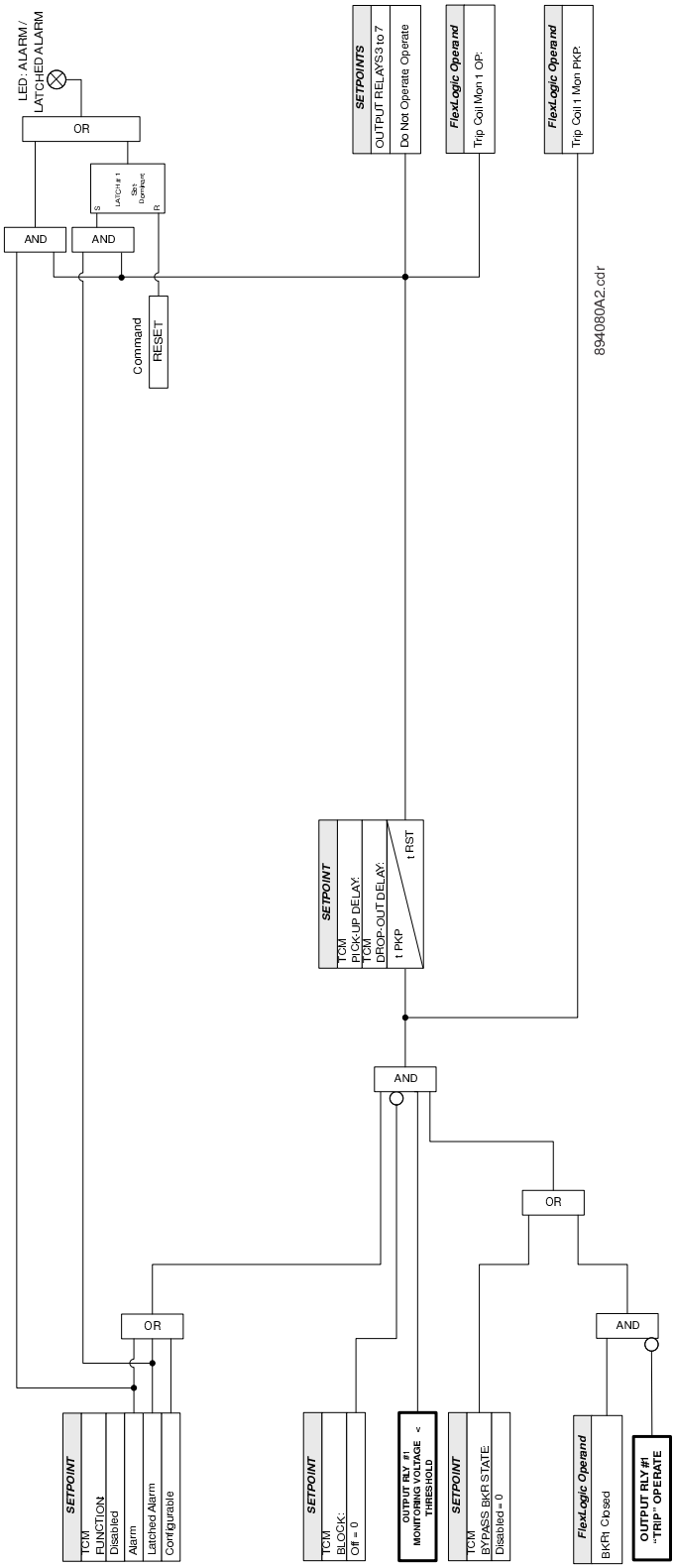

Figure 182: Trip Circuit Monitoring Diagram

CLOSE CIRCUIT MONITORING

Path: ***Setpoints*** > ***Monitoring*** > ***Breaker 1*** > ***Close Circuit Monitoring***

FUNCTION:

Range: Disabled, Latched Alarm, Alarm, Configurable

Default: Disabled

PICKUP DELAY:

Default: 10.000 s

Range: 0.000 to 6000.000 s in steps of 0.001 s

DROPOUT DELAY:

Range: 0.000 to 6000.000 s in steps of 0.001 s

Default: 0.000 s

CLOSE RELAY SELECT:

Default: Relay 2

Range: Off, Relay X

Any output relay from the list of available output relays can be programmed for breaker coil closing monitoring.

> *Note:*
>
> *We recommend selecting the same Trip Relay set under the* ***Breaker: Close Relay Select*** *option.*

BYPASS BREAKER STATE:

Range: Enabled, Disabled

Default: Disabled

Set the Bypass Breaker State to Enabled when a by-pass resistor is connected across the breaker auxiliary contact for continuous Close circuit monitoring. The circuits are monitored regardless of breaker position.

OUTPUT RELAY X

Range: Do Not Operate, Operate

Default: Do Not Operate

BLOCK:

Default: Off

Range: Off, Any FlexLogic operand

EVENTS:

Range: Disabled, Enabled

Default: Enabled

TARGETS:

Range: Disabled, Self-reset, Latched

Default: Self-reset

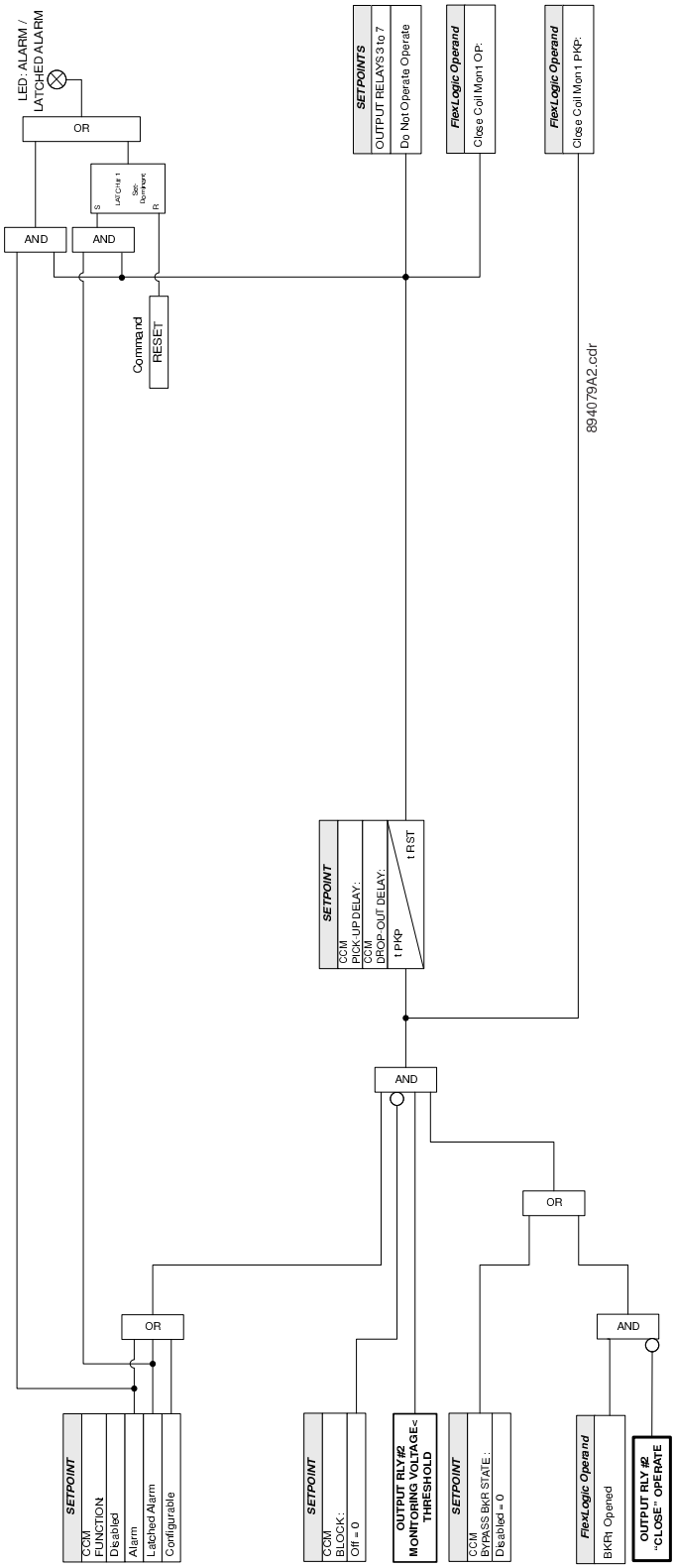

Figure 183: Close Circuit Monitoring Diagram

9.4.2 BREAKER ARCING CURRENT

The relay provides one Breaker Arcing Current element. This element calculates an estimate of the per-phase wear on the breaker contacts by measuring and integrating the current squared passing through the breaker contacts as

an arc. These per-phase values are added to accumulated totals for each phase and compared to a programmed threshold value. When the threshold is exceeded in any phase, the relay can set an output operand and set an alarm. The accumulated value for each phase can be displayed as an actual value.

The same output operands that are selected to operate the Trip output relay that is used to trip the breaker indicating a tripping sequence has begun, are used to initiate this feature. A time delay is introduced between initiation and starting of integration to prevent integration of current flow through the breaker before the contacts have parted. This interval includes the operating time of the output relay, any other auxiliary relays and the breaker mechanism. For maximum measurement accuracy, the interval between the change-of-state of the operand (from 0 to 1) and contact separation should be measured for the specific installation. Integration of the measured current continues for 100 ms, which is expected to include the total arcing period.

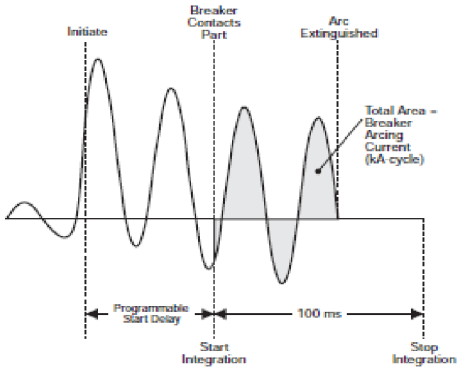

Figure 184: Breaker Arcing Current Measurement

Path: ***Setpoints*** > ***Monitoring*** > ***Breaker*** > ***BKR 1 Monitor*** > ***BKR 1 Arcing Current***

FUNCTION

Range: Disabled, Alarm, Latched Alarm, Configurable

Default: Disabled

SIGNAL INPUT

Range: CT Bank 1 -J1, CT Bank 2 -K1, CT Bank 3 -K2

Default: CT Bank 1 -J1

This setting provides selection of the current input source.

INITIATION

Range: Off, Any FlexLogic operand

Default: Off

The setpoint selects the FlexLogic operand, digital input, virtual input or remote input that initiates the Breaker Arcing Current scheme, typically the Trip signals from internal protection functions.

DELAY

Range: 0.000 to 6000.00 s in steps of 0.001 s

Default: 0.030 s

The setpoint provides a delay interval between the time the tripping sequence is initiated and the time the breaker contacts are expected to part, starting the integration of the measured current.

ALARM LEVEL

Range: 0 to 50000 kA2-c in steps of 1 kA2-c

Default: 1000 kA2-c

The setpoint specifies the threshold value (kA2-cycle) above which the output operand is set.

OUTPUT RELAYS X

Range: Do Not Operate, Operate

Default: Do Not Operate

BLOCK

Range: Off, Any FlexLogic operand

Default: Off

EVENTS

Range: Enabled, Disabled

Default: Enabled

TARGETS

Range: Self-reset, Latched, Disabled

Default: Self-reset

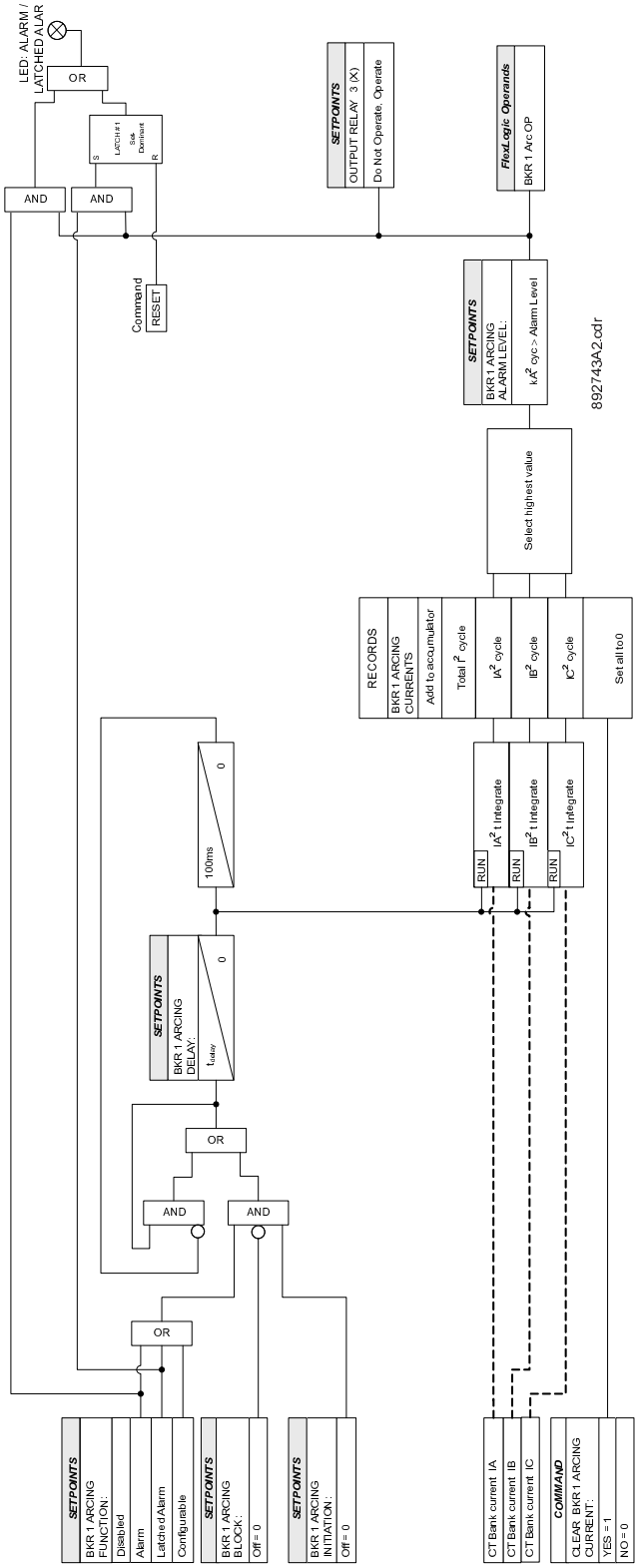

Figure 185: Breaker Arcing Current logic diagram

9.4.3 BREAKER HEALTH

The relay provides breaker health information by monitoring and analyzing the operation count, arcing energy of breaking current, arcing time, tripping time, closing time and spring charging time if applicable. The breaker health

status depends on many factors, such as permissible operation number, magnitude of breaking current, mechanical wear and contact wear.

The operation count is able to give direct information by comparing it with the permissible operation number. The longer tripping time and closing time can provide an approximate estimation of trip/close coils and mechanical wear. The increasing spring charging time may imply developing problems in motor and spring mechanisms. Meanwhile, the increase in arcing energy of the breaking current may reflect the possibility of contact wear. Longer arcing time may suggest the loss of dielectric strength in the arc chamber. If the arcing energy or any of the time intervals is above the related Pickup levels for the use-defined times, the Alarm Led is lit.

The scheme is equipped with three incomplete sequence timers for Trip/Close time, arc time and spring charge time respectively. So it automatically resets the related time interval after the programmed delay.

A breaker operation function is also included, where breaker operation failure is caused by either of the following conditions:

- The breaker does not respond to a Trip command within the programmed breaker operation delay time.
- The breaker does not respond to a Close command within the programmed time.

Path: ***Setpoints*** > ***Monitoring*** > ***Breaker 1*** > ***Breaker Health***

FUNCTION

Range: Disabled, Alarm, Latched Alarm, Configurable

Default: Disabled

MODE

Range: Detection, Monitoring

Default: Detection

The Breaker Health has two running modes: detection and monitoring. Since the monitored time intervals differ for different breaker types and manufacturers, the detection mode can be used to help set the Pickup settings based on the historical true values. The operation count, arcing energy of the breaking current, arcing time, tripping time, closing time and spring charging time are measured and displayed in ***Records*** > ***Breaker Health***, but the element does not pick up when in detection mode. Monitoring mode is the normal mod e, wherein measurements are analyzed and the element may pick up accordingly.

PRESET TRIP COUNTER

Range: 0 to 100000 in steps of 1

Default: 0

This setting pre-sets the actual operation number when the relay is starting in service or the record is cleared.

TRIP TRIGGER

Range: Off, Any FlexLogic operand

Default: Off

This setting assigns the trip initiation signal.

CLOSE TRIGGER

Range: Off, Any FlexLogic operand

Default: Off

This setting assigns the close initiation signal.

SPRING CHARGE STATUS

Range: Off, Any FlexLogic operand

Default: Off

The setting selects the signal to show the status of Spring Charge. Normally, the contact input connected to the auxiliary contact of the limit switch can be used.

TRIP TIME PICKUP

Range: 0.000 to 6000.000 s in steps of 0.001 s

Default: 0.050 s

The setting sets the Pickup level of the Trip time. The Trip time interval is initiated by the Trip Trigger signal and stopped by the Open Status signal.

CLOSE TIME PICKUP

Range: 0.000 to 6000.000 s in steps of 0.001 s

Default: 0.050 s

The setting sets the Pickup level of the Close time. The Close time interval is initiated by the Close Trigger signal and stopped by the Close Status signal.

INCOMPLETE TRP/CLS TIME

Range: 0.000 to 6000.000 s in steps of 0.001 s

Default: 0.100 s

The setting declares a breaker operation failure condition if the breaker does not respond within this time delay. The setting should be greater than the Trip time PKP value and Close time PKP value.

ARC TIME PICKUP

Range: 0.000 to 6000.000 s in steps of 0.001 s

Default: 0.100 s

The setting sets the Pickup level of the Arc time. The Arc time is initiated by the Open Status signal and stopped when the current samples in one cycle are less than 0.02 CT. Then the Arc time is equal to the calculated time interval minus one cycle.

INCOMPLETE ARC TIME

Range: 0.000 to 6000.000 s in steps of 0.001 s

Default: 0.300 s

The setting declares an Arc time failure condition if there are currents flowing through the breaker after this time delay. This setting should be greater than the Arc time PKP value.

SPRING CHARGE TIME PICKUP

Range: 0.000 to 6000.000 s in steps of 0.001 s

Default: 15.000 s

This setting sets the Pickup level of the Spring Charge time. The Spring Charge time is measured from the pulse duration of the Spring Charge Status.

INCOMPLETE CHARGE TIME

Range: 0.000 to 6000.000 s in steps of 0.001 s

Default: 45.000 s

The setting declares a Charge time failure condition if the spring charging process is not finished after this time delay. The setting should be greater than the Charge time PKP value.

ARC ENERGY PICKUP

Range: 1 to 100000 kA2-c in steps of 1 kA2-c

Default: 1000 kA2-c

The setting sets the Pickup level of the arc energy. The arc energy value is calculated in the Breaker Arcing Current element.

> *Note:*
> *The arc energy is calculated by the breaker arcing current element. If the breaker arcing current element is disabled, the arc energy is not calculated and this setting should not be used. The arc energy used here is the individual value for each trip and not the accumulated value recorded in the Breaker Arcing Current element.*

ALARM COUNTER

Range: 1 to 100 in steps of 1

Default: 5

The setting sets the alarm counter level. One counter is used to accumulate the Pickup data from all monitoring quantities. If the counter value is above the alarm counter level, the LED is lit and one operand is asserted.

OUTPUT RELAY X

Range: Do Not Operate, Operate

Default: Do Not Operate

BLOCK

Range: Off, Any FlexLogic operand

Default: Off

EVENTS

Range: Enabled, Disabled

Default: Enabled

TARGETS

Range: Disabled, Self-reset, Latched

Default: Self-reset

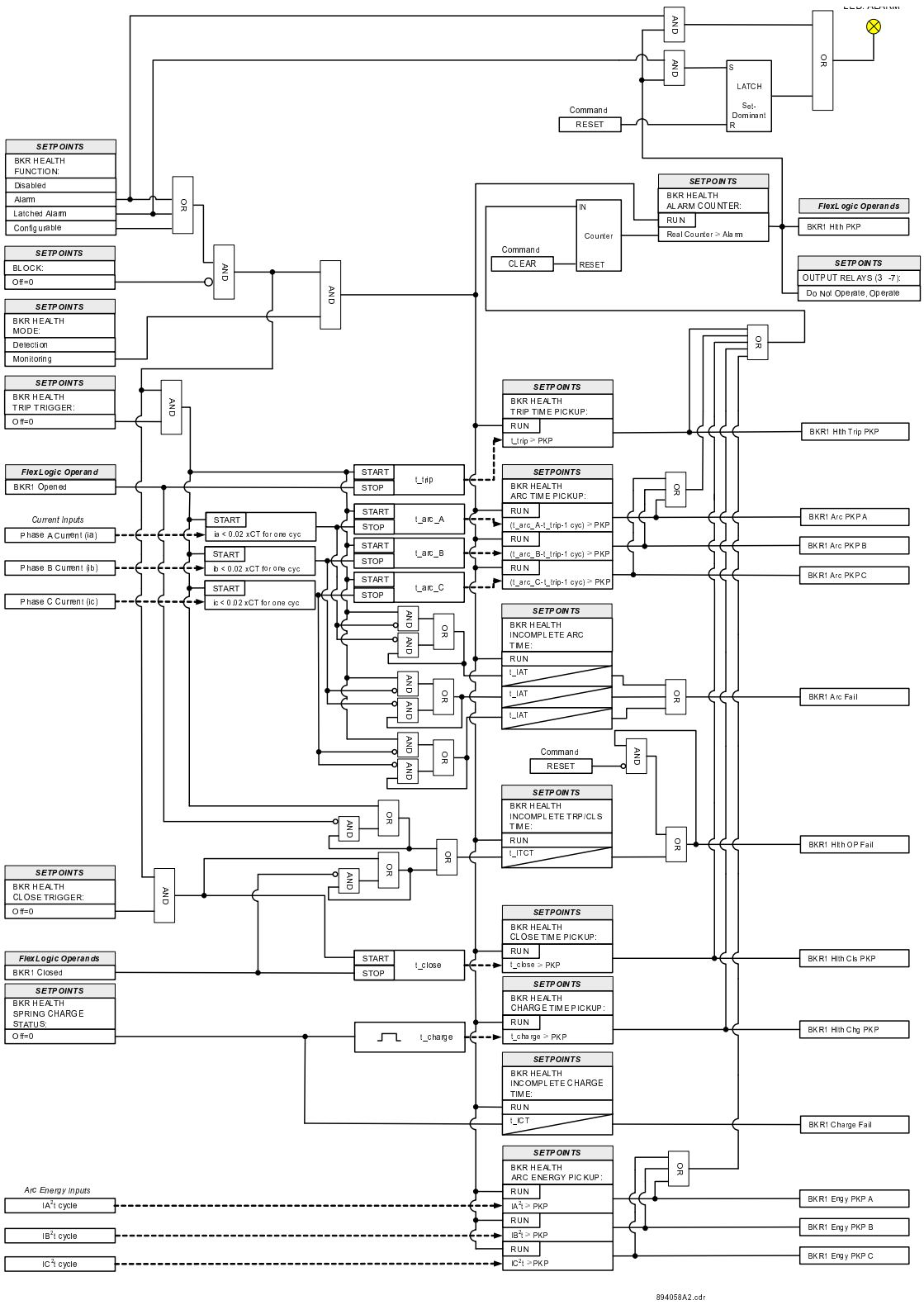

Figure 186: Breaker Health and Operation logic diagram

9.5 FUNCTIONS

9.5.1 DEMAND

Current Demand is measured on each phase, and on three phases for real, reactive, and apparent power. Setpoints allow emulation of some common electrical utility demand measuring techniques for statistical or control purposes.

> *Note:*
> *The relay is not approved as, or intended to be, a revenue metering instrument. If used in a peak load control system, the user must consider the accuracy rating and method of measurement employed, and the source VTs and CTs, in comparison with the electrical utility revenue metering system.*

The relay can be set to calculate Demand by any of three methods; Thermal Exponential, Block Interval, Rolling Demand.

Thermal Exponential

This selection emulates the action of an analog peak recording Thermal Demand meter. The relay measures the quantity (RMS current, real power, reactive power, or apparent power) on each phase every second, and assumes the circuit quantity remains at this value until updated by the next measurement. It calculates the Thermal Demand equivalent based on:

$$d(t) = D(1 - e^{-kt})$$

Where:

- d = demand value after applying input quantity for time t (in minutes)
- D = input quantity (constant)
- k = 2.3/thermal 90% response time.

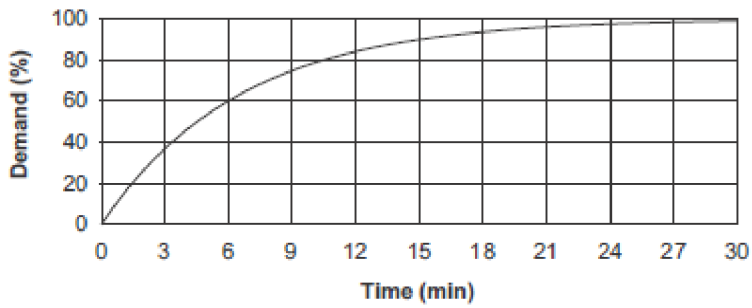

Figure 187: Thermal Demand Characteristic (15 min response)

The 90% thermal response time characteristic defaults to 15 minutes. A setpoint establishes the time to reach 90% of a steady-state value, just as with the response time of an analog instrument. A steady-state value applied for twice the response time will indicate 99% of the value.

Block Interval

This selection calculates a linear average of the quantity (RMS current, real power, reactive power, or apparent power) over the programmed Demand time interval, starting daily at 00:00:00 (i.e. 12 am). The 1440 minutes per day is divided into the number of blocks as set by the programmed time interval. Each new value of Demand becomes available at the end of each time interval.

Rolling Demand

This selection calculates a linear average of the quantity (RMS current, real power, reactive power, or apparent power) over the programmed Demand time interval, in the same way as Block Interval. The value is updated every minute and indicates the Demand over the time interval just proceeding the time of update.

9.5.1.1 CURRENT DEMAND

The Current Demand for each phase is calculated individually, and the Demand for each phase is monitored by comparison with a single Current Demand Pickup value. If the Current Demand Pickup is equaled or exceeded by any phase, the relay can cause an alarm or signal an output relay.

Path: ***Setpoints*** > ***Monitoring*** > ***Functions*** > ***Demand*** > ***Current Demand 1(X)***

FUNCTION

Range: Disabled, Alarm, Latched Alarm, Configurable

Default: Configurable

SIGNAL INPUT

Range: dependent upon the order code

Default: CT Bank 1-J1

This setting provides the selection for the current input bank. The bank names can be changed in: ***Setpoints*** > ***System*** > ***Current Sensing*** > ***[Name]*** > ***CT Bank Name***.

MEASUREMENT TYPE

Range: Blk Interval, Exponential, Rolling Dmd

Default: Blk Interval

This setting sets the measurement method. Three methods can be applied.

THERMAL 90% RESPONSE TIME

Range: 5 min, 10 min, 15 min, 20 min, 30 min

Default: 15 min

This setpoint sets the time required for a steady state current to indicate 90% of the actual value to approximately match the response of the relay to analog instruments. The setpoint is visible only if ***MEASUREMENT TYPE*** is `Exponential`.

TIME INTERVAL

Range: 5 min, 10 min, 15 min, 20 min, 30 min

Default: 20 min

This setpoint sets the time period over which the current demand calculation is to be performed. The setpoint is visible only if ***MEASUREMENT TYPE*** is `Block Interval` or `Rolling Demand`.

PICKUP

Range: 10 to 10000 A in steps of 1 A

Default: 5000 A

This setpoint sets the Current Demand Pickup level.

OUTPUT RELAY X

Range: Do Not Operate, Operate

Default: Do Not Operate

BLOCK

Range: Off, Any FlexLogic operand

Default: Off

EVENTS

Range: Enabled, Disabled

Default: Disabled

TARGETS

Range: Disabled, Self-reset, Latched

Default: Disabled

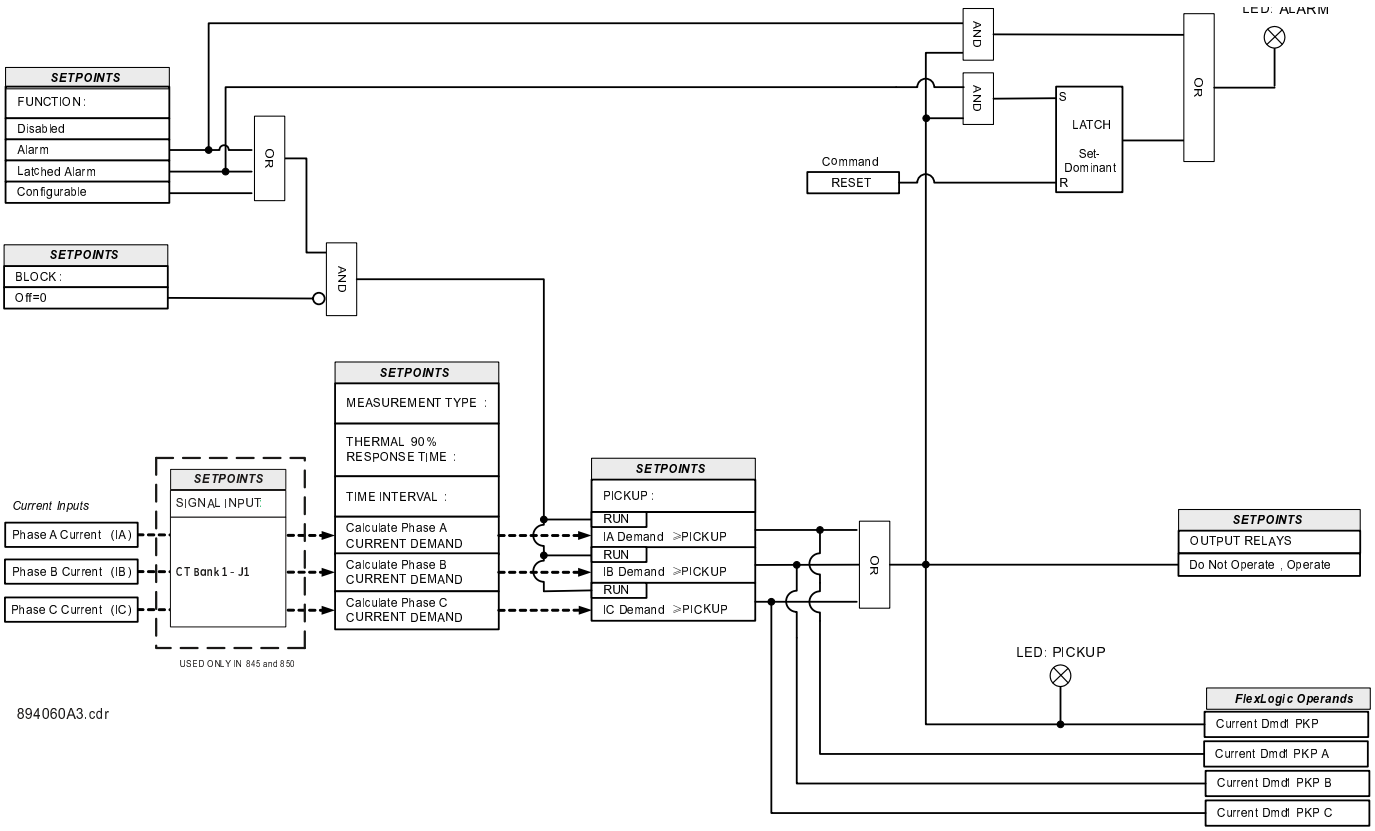

Figure 188: Current Demand logic diagram

9.5.1.2 REAL POWER DEMAND

The Real Power Demand is monitored by comparing it to a Pickup value. If the Real Power Demand Pickup is ever equaled or exceeded, the relay can be configured to cause an alarm or signal an output relay.

Path: ***Setpoints*** > ***Monitoring*** > ***Functions*** > ***Demand*** > ***Real Power Demand 1(X)***

FUNCTION

Range: Disabled, Alarm, Latched Alarm, Configurable

Default: Configurable

SIGNAL INPUT

Range: Power x, (Dependent on order code)

Default: Power 1

MEASUREMENT TYPE

Range: Blk Interval, Exponential, Rolling Demand

Default: Blk Interval

This setting sets the measurement method. Three methods can be applied.

THERMAL 90% RESPONSE TIME

Range: 5 min, 10 min, 15 min, 20 min, 30 min

Default: 15 min

This setpoint sets the time required for steady-state Real Power to indicate 90% of the actual value to approximately match the response of the relay to analog instruments. The setpoint is visible only if ***MEASUREMENT TYPE*** is `Exponential`.

TIME INTERVAL

Range: 5 min, 10 min, 15 min, 20 min, 30 min

Default: 20 min

This setpoint sets the time period over which the Real Power Demand calculation is to be performed. The setpoint is visible only if ***MEASUREMENT TYPE*** is `Block Interval` or `Rolling Demand`.

PICKUP

Range: 0.1 to 300000.0 kW in steps of 0.1 kW

Default: 5000.0 kW

This setting sets the Real Power Demand Pickup level. The absolute value of real power demand is used for the Pickup comparison.

RESET DEMAND

Range: Off, Any FlexLogic operand

Default: Off

Any FlexLogic operand can be used to reset the minimum and maximum real power demand from the current value to zero. These values are reset to zero at the rising edge of the set operand. After reset to zero, calculation of minimum and maximum real power demand values continues until the next rising edge of the reset operand.

The Reset Demand operand doesn’t reset the current value of the demand used by the Real Power Demand function.

OUTPUT RELAYS X

Range: Do Not Operate, Operate

Default: Do Not Operate

BLOCK

Range: Off, Any FlexLogic operand

Default: Off

EVENTS

Range: Enabled, Disabled

Default: Disabled

TARGETS

Range: Disabled, Self-reset, Latched

Default: Disabled

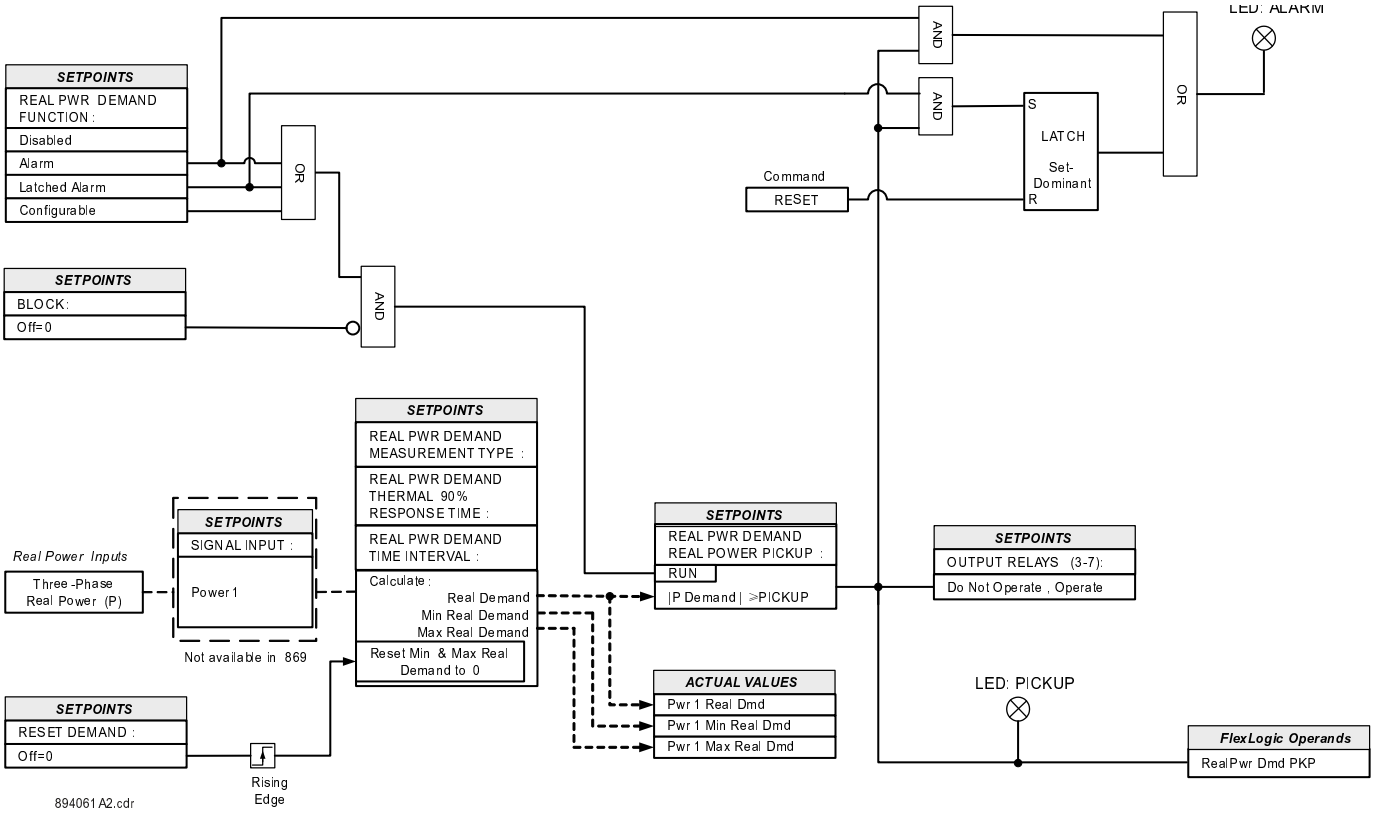

Figure 189: Real Power Demand logic diagram

9.5.1.3 REACTIVE POWER

he Reactive Power Demand is monitored by comparing to a Pickup value. If the Reactive Power Demand Pickup is ever equaled or exceeded, the relay can be configured to cause an alarm or signal an output relay.

Path: ***Setpoints*** > ***Monitoring*** > ***Functions*** > ***Demand*** > ***Reactive Power Demand 1(X)***

FUNCTION

Range: Disabled, Alarm, Latched Alarm, Configurable

Default: Configurable

SIGNAL INPUT

Range: Power x (Dependent on order code)

Default: Power 1

MEASUREMENT TYPE

Range: Blk Interval, Exponential, Rolling Demand

Default: Blk Interval

The setting sets the measurement method. Three methods can be applied.

THERMAL 90% RESPONSE TIME

Range: 5 min, 10 min, 15 min, 20 min, 30 min

Default: 15 min

The setpoint sets the time required for a steady state Reactive Power to indicate 90% of the actual value to approximately match the response of the relay to analog instruments. The setpoint is visible only if ***MEASUREMENT TYPE*** is `Exponential`.

TIME INTERVAL

Range: 5 min, 10 min, 15 min, 20 min, 30 min

Default: 20 min

The setpoint sets the time period over which the Reactive Power Demand calculation is to be performed. The setpoint is visible only if ***MEASUREMENT TYPE*** is `Block Interval` or `Rolling Demand`.

PICKUP

Range: 0.1 to 300000.0 kvar in steps of 0.1 kvar.

Default: 5000.0 kvar

Any FlexLogic operand can be used to reset the accumulated reactive power demand from its current value to zero. The accumulated value resets at the rising edge of the set operand. After reset to zero, the reactive power demand element continues calculating the demand until the next rising edge of the reset operand.

RESET DEMAND

Range: Off, Any FlexLogic operand

Default: Off

Any FlexLogic operand can be used to reset the minimum and maximum reactive power demand from its current value to zero. The minimum and maximum values reset at the rising edge of the set operand. After reset to zero, calculation of minimum and maximum reactive power demand values continues until the next rising edge of the reset operand.

The Reset Demand operand doesn't reset the current value of the demand used by the Reactive Power Demand function.

OUTPUT RELAY X

Range: Do Not Operate, Operate

Default: Do Not Operate

BLOCK

Range: Off, Any FlexLogic operand

Default: Off

EVENTS

Range: Enabled, Disabled

Default: Disabled

TARGETS

Range: Disabled, Self-reset, Latched

Default: Disabled

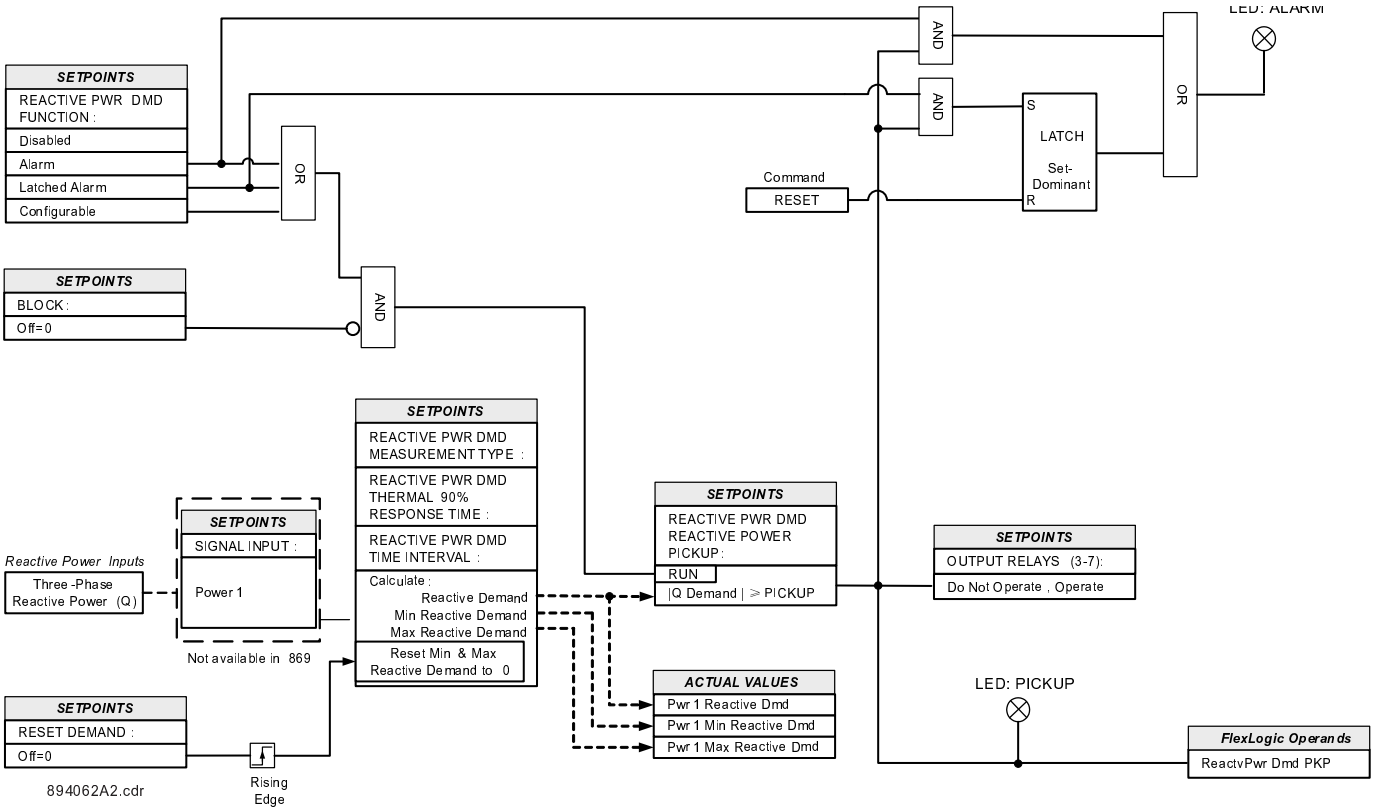

Figure 190: Reactive Power Demand logic diagram

9.5.1.4 APPARENT POWER DEMAND

The Apparent Power Demand is monitored by comparing to a Pickup value. If the Apparent Power Demand Pickup is ever equaled or exceeded, the relay can be configured to cause an alarm or signal an output relay.

Path: ***Setpoints*** > ***Monitoring*** > ***Functions*** > ***Demand*** > ***Apparent Power Demand 1(X)***

FUNCTION

Range: Disabled, Alarm, Latched Alarm, Configurable

Default: Configurable

SIGNAL INPUT

Range: Power x (Dependent on order code)

Default: Power 1

MEASUREMENT TYPE

Range: Blk Interval, Exponential, Rolling Demand

Default: Blk Interval

The setting sets the measurement method. Three methods can be applied.

THERMAL 90% RESPONSE TIME

Range: 5 min, 10 min, 15 min, 20 min, 30 min

Default: 15 min

The setpoint sets the time required for a steady state Apparent Power to indicate 90% of the actual value to approximately match the response of the relay to analog instruments. The setpoint is visible only if ***MEASUREMENT TYPE*** is `Exponential`.

TIME INTERVAL

Range: 5 min, 10 min, 15 min, 20 min, 30 min

Default: 20 min

The setpoint sets the time period over which the Apparent Power Demand calculation is to be performed. The setpoint is visible only if ***MEASUREMENT TYPE*** is `Block Interval` or `Rolling Demand`.

PICKUP

Range: 0.1 to 300000.0 kVA in steps of 0.1 kVA

Default: 5000.0 kVA

The setting sets the Apparent Power Demand Pickup level.

RESET DEMAND

Range: Off, Any FlexLogic operand

Default: Off

Any FlexLogic operand can be used to reset the minimum and maximum apparent power demand from its current value to zero. The minimum and maximum values reset at the rising edge of the set operand. After reset to zero, calculation of minimum and maximum apparent power demand values continues until the next rising edge of the reset operand.

The Reset Demand operand doesn't reset the current value of the demand used by the Apparent Power Demand function.

OUTPUT RELAY X

Range: Do Not Operate, Operate

Default: Do Not Operate

BLOCK

Range: Off, Any FlexLogic operand

Default: Off

EVENTS

Range: Enabled, Disabled

Default: Disabled

TARGETS

Range: Disabled, Self-reset, Latched

Default: Disabled

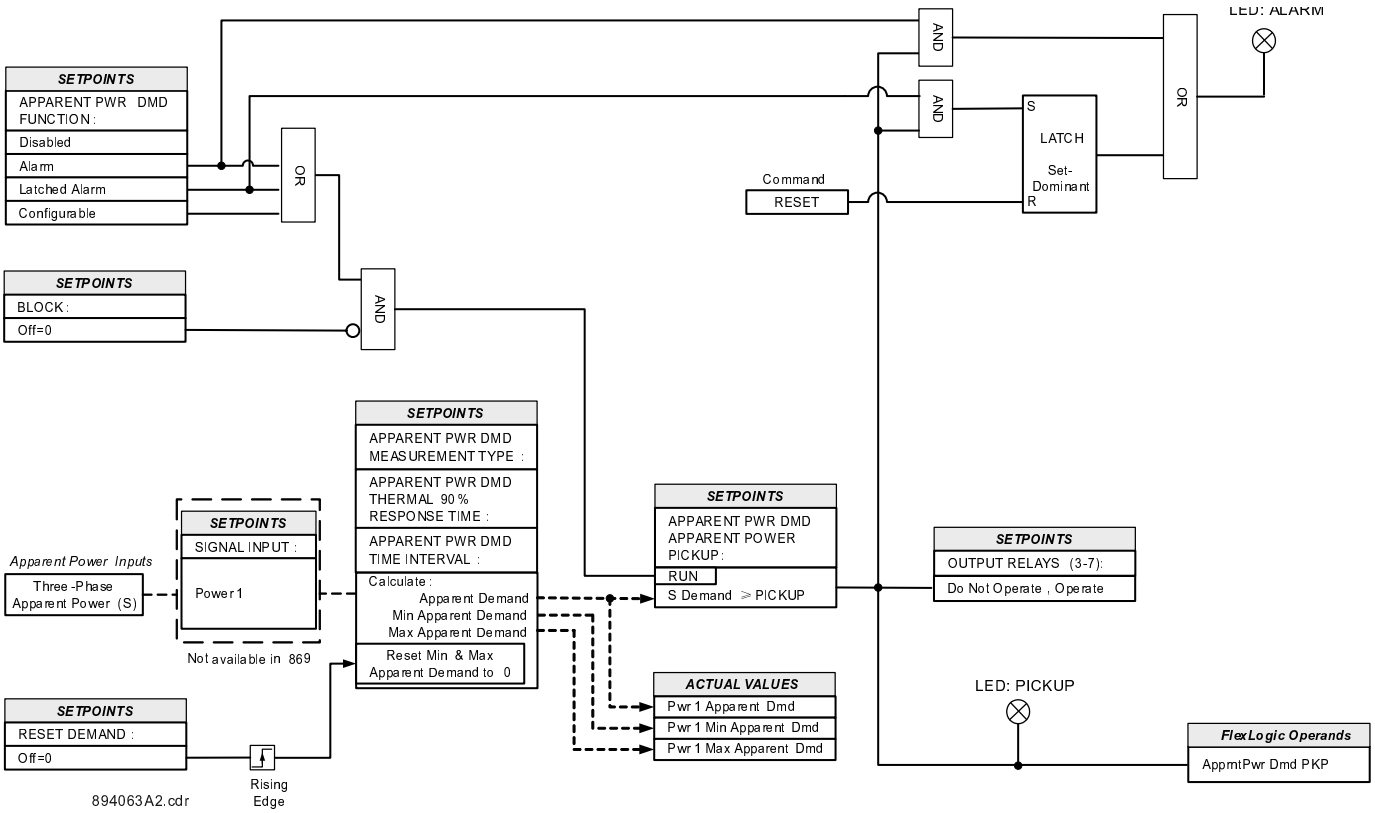

Figure 191: Apparent Power Demand logic diagram

9.5.2 PULSED OUTPUTS

The relay provides a Pulse Output element for four energy measurements. The Pulse Output element can operate auxiliary relays after an adjustable energy increment for the quantities of positive and negative MWh (Megawatt hours) and positive and negative MVARh (Mega Volt Amp Reactive hours).

Pulses occur at the end of each programmed energy increment. Upon power-up of the relay, the Pulse Output function, if enabled, continues from where it was at the time of loss of control power. For example, if control power is removed when the positive Watt hours stored at last pulse was 24.000 MWh, when control power is re-applied a pulse occurs at 34.000 MWh if the energy increment is set at 10.000 MWh.

1. The Auxiliary Output relay(s) used for this element must be set to `Self-Resetting`. The pulses consist of a one second on-time and a one second off-time. This feature is programmed such that no more than one pulse per two seconds is required.
2. The relay is not a revenue class meter and cannot be used for billing purposes.
3. Energy quantities are displayed in MWh and MVarh, with resolutions of 1 kWh and 1 kVarh respectively.

Path: ***Setpoints*** > ***Monitoring*** > ***Functions*** > ***Pulsed Outputs***

FUNCTION

Range: Disabled, Enabled

Default: Disabled

SIGNAL INPUT

Range: Power x (Dependent on order code)

Default: Power 1

This setting provides the power element selection for the CT and VT bank identification.

POS WHS PULSE INCREMENT

Range: 0.000 to 1000.000 MWh in steps of 0.001 MWh

Default: 10.000 MWh

The setpoint specifies the positive Watthours threshold pulse increment after which the output pulse and output operand are set.

POS WHS PULSE RELAY X

Range: Do Not Operate, Operate

Default: Do Not Operate

NEG WHS PULSE INCREMENT

Range: 0.000 to 1000.000 MWh in steps of 0.001 MWh

Default: 10.000 MWh

The setpoint specifies the negative Watthours threshold pulse increment after which the output pulse and output operand are set.

NEG WHS PULSE RELAY X

Range: Do Not Operate, Operate

Default: Do Not Operate

POS VARHS PULSE INCREMENT

Range: 0.000 to 1000.000 MVARh in steps of 0.001 MVARh

Default: 10.000 MVARh

The setpoint specifies the positive VARhours threshold pulse increment after which the output pulse and output operand are set.

POS VARHS PULSE RELAY X

Range: Do Not Operate, Operate

Default: Do Not Operate

NEG VARHS PULSE INCREMENT

Range: 0.000 to 1000.000 MVARh in steps of 0.001 MVARh

Default: 10.000 MVARh

The setpoint specifies the positive VARhours threshold pulse increment after which the output pulse and output operand are set.

NEG VARHS PULSE RELAY X

Range: Do Not Operate, Operate

Default: Do Not Operate

EVENTS

Range: Disabled, Enabled

Default: Enabled

TARGETS

Range: Disabled, Self-reset, Latched

Default: Self-Reset

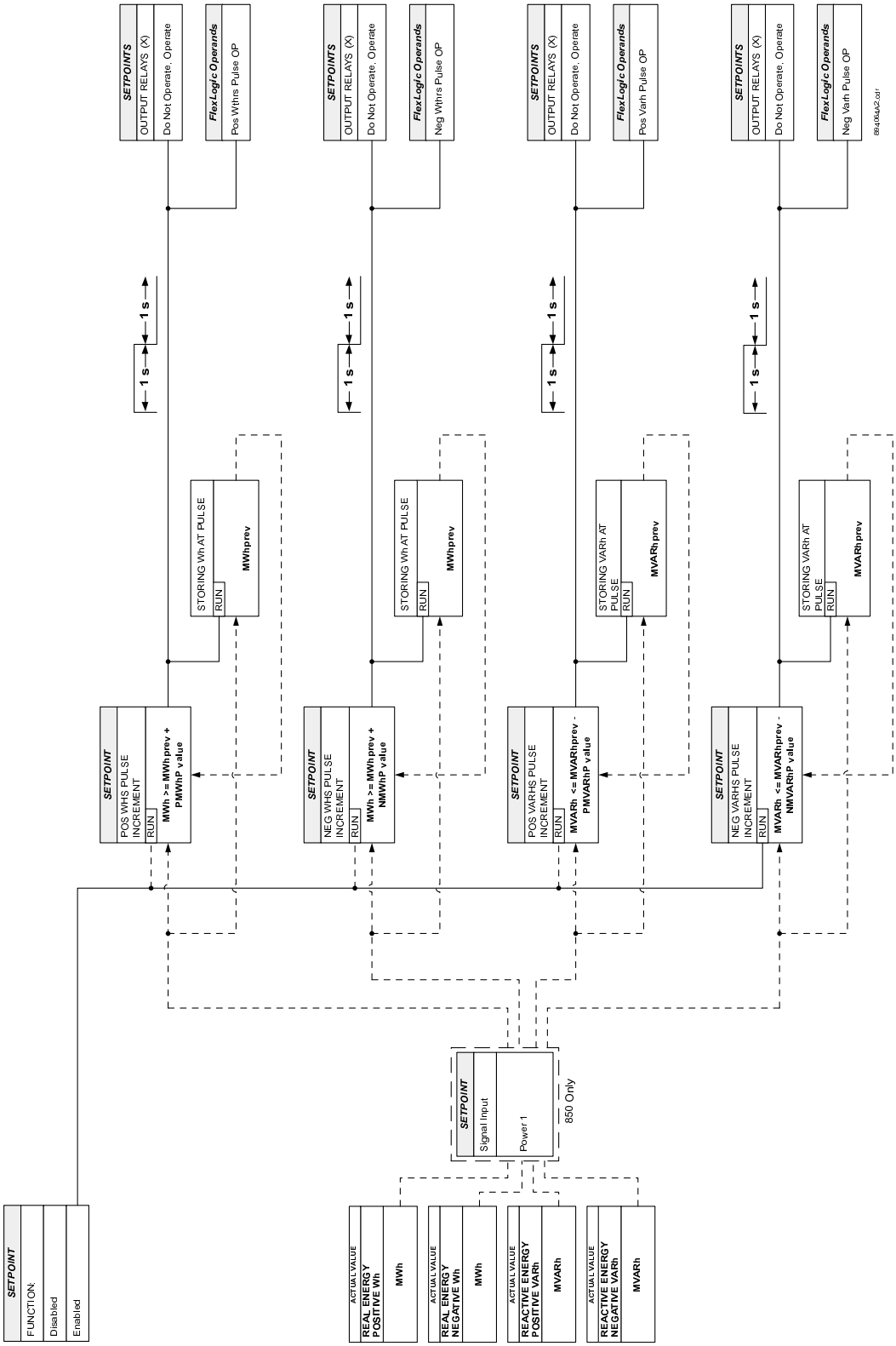

Figure 192: Pulsed Outputs logic diagram

9.5.3 DIGITAL COUNTERS

The relay provides sixteen identical Digital Counters. A Digital Counter counts the number of state transitions from logic 0 to logic 1.

The Digital Counters are numbered from 1 to 16. The counters are used to count operations such as the Pickups of an element, the changes of state of an external contact (e.g. breaker auxiliary switch), or the pulses from a watt-hour meter.

Path: ***Setpoints*** > ***Monitoring*** > ***Functions*** > ***Digital Counters*** > ***Digital Counter 1 (16)***

FUNCTION

Range: Disabled, Enabled

Default: Disabled

NAME

Range: Any 13 alphanumeric characters

Default: Counter 1

UNITS

Range: Any 5 alphanumeric characters

Default: Units

Assigns a label to identify the unit of measure with respect to the digital transitions to be counted. The units label will appear in the metering corresponding Actual Values Status under ***Records*** > ***Digital Counters***.

PRE-SET

Range: -2147483648, 0, +2147483647

Default: 0

The setpoint sets the count to a required pre-set value before counting operations begin, as in the case where a substitute relay is installed in place of an in-service relay, or while the Counter is running.

COMPARE

Range: -2147483648, 0, +2147483647

Default: 0

The setpoint sets the value to which the accumulated count value is compared. Three FlexLogic output operands are provided to indicate if the present value is ‘more than (HI)’, ‘equal to (EQL)’, or ‘less than (LO)’ the set value.

UP

Range: Off, Any FlexLogic operand

Default: Off

The setpoint selects the FlexLogic operand for incrementing the Counter. If an enabled UP input is received when the accumulated value is at the limit of +2147483647, the counter rolls over to -2147483648 and shows the alarm ‘Digital Counter 1 at Limit’.

DOWN

Range: Off, Any FlexLogic operand

Default: Off

The setpoint selects the FlexLogic operand for decrementing the Counter. If an enabled DOWN input is received when the accumulated value is at the limit of +2147483647, the counter rolls over to -2147483648 and shows the alarm 'Digital Counter 1 at Limit'.

SET TO PRE-SET

Range: Off, Any FlexLogic operand

Default: Off

The setpoint selects the FlexLogic operand used to set the counter to the pre-set value. The counter is set at pre-set value in the following situations:

When the Counter is enabled and Digital Counter 1 Set to Pre-Set operand has value 1 (when the Counter is enabled and Digital Counter 1 Set to Pre-Set operand has value 0, the Counter will be set to 0).

When the Counter is running and Digital Counter 1 Set to Pre-Set operand changes the state from 0 to 1 (Digital Counter 1 Set to Pre-Set changing from 1 to 0 while the Counter is running has no effect on the count).

When a reset or reset/freeze command is sent to the Counter and Digital Counter 1 Set to Pre-Set operand has the value 1 (when a reset or reset/freeze command is sent to the Counter and Digital Counter 1 Set to Pre-Set operand has the value 0, the Counter will be set to 0).

RESET

Range: Off, Any FlexLogic operand

Default: Off

The setpoint selects the FlexLogic operand for setting the count, either 0 or the pre-set value depending on the state of the Counter 1 Set to Pre-set operand.

FREEZE/RESET

Range: Off, Any FlexLogic operand

Default: Off

The setpoint selects the FlexLogic operand for freezing (capturing) the accumulating count value into a separate register with the associated date and time of the operation while resetting the count to either 0 or the pre-set value depending on the state of the Counter 1 Set to Pre-set operand.

FREEZE/COUNT

Range: Off, Any FlexLogic operand

Default: Off

The setpoint selects the FlexLogic operand for freezing (capturing) the accumulating count value into a separate register with the associated date and time of the operation while continuing counting. The present accumulated value and frozen (captured) value with the associated date/time stamp are available as STATUS values. If control power is interrupted, during the power-down operation, the accumulated and frozen (captured) values are saved into non-volatile memory.

HI OUTPUT RELAY X

Range: Do Not Operate, Operate

Default: Do Not Operate

EQL OUTPUT RELAY X

Range: Do Not Operate, Operate

Default: Do Not Operate

LO OUTPUT RELAY X

Range: Do Not Operate, Operate

Default: Do Not Operate

BLOCK

Range: Off, Any FlexLogic operand

Default: Off

EVENTS

Range: Disabled, Enabled

Default: Enabled

> *Note:*
> *The counter accumulated value can be reset to zero either by asserting an operand programmed under Reset from the counter menu, executing the clear Digital Counters command under the Records/Clear menu, or by setting the function of the counter to "Disabled".*

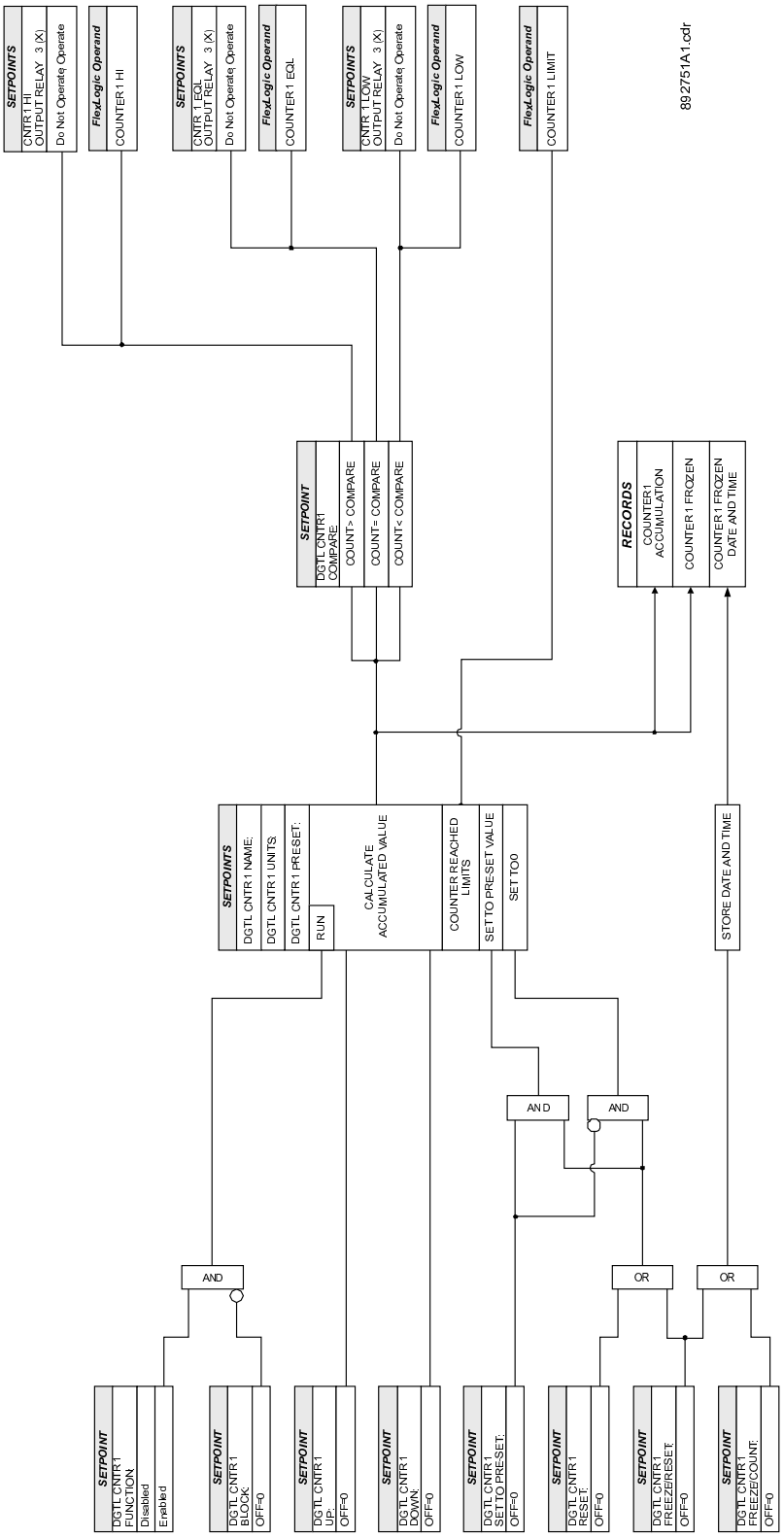

Figure 193: Digital Counter logic diagram

9.6 HARMONIC DETECTION

The Harmonic detection 1(6) element monitors the selected 2nd to 5th harmonic or Total Harmonics Distortion (THD), which is present in the phase currents. The relay provides six identical Harmonic Detection elements.

In a distribution network, harmonic detection can be used to monitor spurious harmonics from inverter based distributed energy resources, and take control actions such as islanding DERs or turning on harmonic filters. During transformer energization or motor starts, the inrush current present in phase currents can impact some sensitive elements, such as negative sequence overcurrent. Therefore, the ratio of the second harmonic to the fundamental magnitude per phase is monitored, while exceeding the settable pickup level, an operand is asserted, which can be used to block such sensitive elements.

During startup or shutdown of generator connected transformers, or following a load rejection, the transformer can experience an excessive ratio of volts to hertz, that is, become overexcited. Similarly, the ratio of the fifth harmonic to the fundamental magnitude can be monitored to detect the overexcitation condition.

Note:
The harmonics monitored in this element is calculated from the phase currents, unlike the second or fifth harmonic differential current used in the transformer differential element.

Note:
The harmonics are updated every protection pass. The THD is updated every three cycles, which is not recommended as a blocking signal.

Path: ***Setpoints*** > ***Monitoring*** > ***Harmonic Detection*** > ***Harmonic Detection 1(X)***

FUNCTION

Range: Disabled, Alarm, Latched Alarm, Configurable

Default: Disabled

SIGNAL INPUT

Range: dependent upon the order code

Default: CT Bank 1–J1

HARMONIC

Range: 2nd, 3rd, 4th, 5th, THD

Default: 2nd

This setting selects the specified harmonic or THD to be monitored. The harmonic or THD is expressed in percent relative to the fundamental magnitude.

PICKUP

Range: 0.1 to 100.0% in steps of 0.1%

Default: 20.0%

PICKUP DELAY

Range: 0.000 to 60000.000 s in steps of 0.001 s

Default: 0.000 s

PHASES FOR OPERATION

Range: Any One, Any Two, All Three, Average

Default: Any One

This setting defines the phases required for operation, and the detail is explained below:

- ANY ONE: At least one phase picked up.
- ANY TWO: Two or more phases picked up.
- ANY THREE: All three phases picked up.
- AVERAGE: The average of three-phase harmonics or THDs picked up.

If set to `Average`, the relay calculates the average level of the selected harmonic and compares this level against the pickup setting. Averaging of the selected harmonic follows an adaptive algorithm depending on the fundamental current magnitude per-phase. If the fundamental magnitude on any of the three phases goes below the current cut-off level, the selected harmonic current from that phase is dropped (zeroed) from the equation for averaging, and the divider is decreased from 3 to 2. The same happens if the magnitude of the fundamental magnitude on one of remaining two phases drops below the cut-off level. In this case the selected harmonic on this phase is dropped from summation, and the divider is decreased to 1.

MIN OPER CURRENT

Range: 0.03 to 1.00 x CT in steps of 0.01

Default: 0.10 x CT

This setting sets the minimum value of current required to allow the Harmonic Detection element to operate.

If ***PHASES FROM OPERATION*** is set to `Average`, the average of three-phase currents is used for supervision. A similar adaptive average algorithm is applied to calculate the average of operation current magnitude.

OUTPUT RELAY X

Range: Do Not Operate, Operate

Default: Do Not Operate

EVENTS

Range: Disabled, Enabled

Default: Enabled

TARGETS

Range: Self-reset, Latched, Disabled

Default: Self-reset

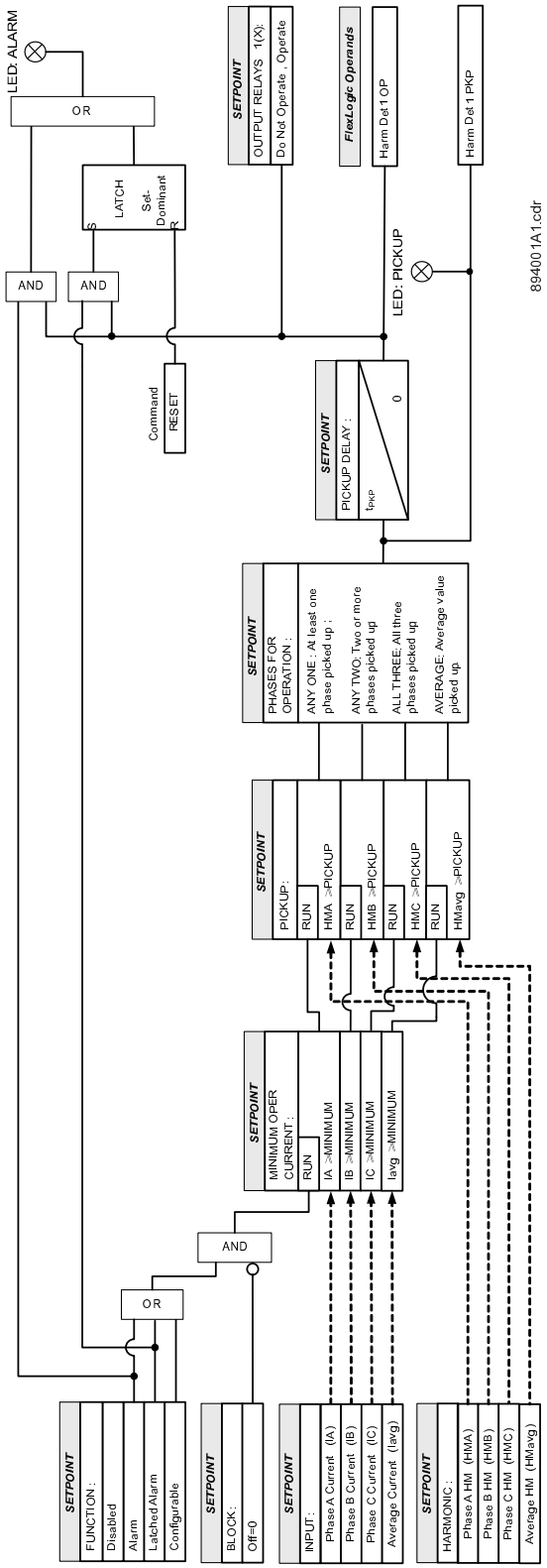

Figure 194: Harmonic Detection logic diagram

9.7 RESISTANCE TEMPERATURE DETECTOR FUNCTIONS

9.7.1 RTD TEMPERATURE

The Resistance Temperature Detector (RTD) wiring diagram is shown below:

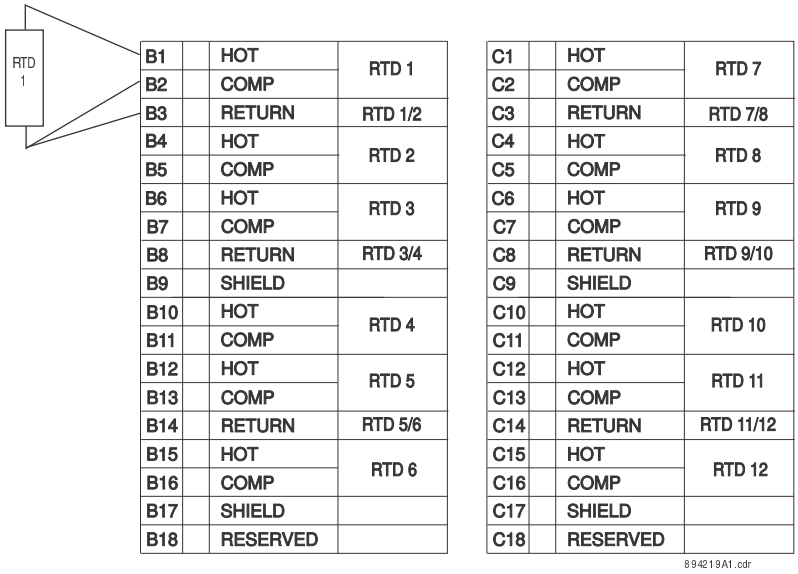

Figure 195: RTD Wiring diagram

> *Note:*
> *To enhance the accuracy of the RTD, ensure all 3 cables are of the same length and gauge. In addition, the Compensation and Return wires must be connected on the RTD side and not on the relay side.*

RTD Inputs

The relay has two methods of supporting RTD inputs.

- I/O cards installed in the relay can supply up to 13 RTDs.
- An optional CANBUS-based Remote Input/Output module (RMIO unit) can also be installed, which can monitor up to 12 additional RTDs (referred to as RRTDs). The RMIO unit supports 6, 9, or 12 RRTDs.

Hardware and software is provided to receive signals from external Resistance Temperature Detectors (RTDs) and convert these signals into a digital format for use as required. These channels are intended to be connected to any of the RTD types in common use.

Depending on the order code (Advanced Monitoring option selected), the relay is supplied with one combo card consisting of one RTD input, one Ohms input, four DCmA inputs and seven DCmA outputs. Additionally, the relay can be furnished with up to two optional RTD cards, each of them having 6 RTD input channels. Only slots B and C can accept the optional RTD cards.

> *Note:*
> *If only one RTD card is ordered at the time the relay is ordered, this RTD card is always shown in slot B. The order code selection does not allow for an RTD card in slot C, if no RTD card is ordered in slot B.*

> *Note:*
> *An I/O card L ordered in Slot G will contain an additional RTD input on the card. It will be the highest RTD number shown (i.e. if 1 additional RTD card is used, then the low voltage I/O (LVIO)RTD will be RTD #7).*

An alphanumeric name is assigned to each channel; this name is included in the channel actual values. It is also used to reference the channel as the input parameter to features designed to measure this type of parameter. Selecting the type of RTD connected to the channel configures the channel. The conversion chart is shown in the following table.

RTD Temperature vs. Resistance

TEMPERATURE		RESISTANCE (IN OHMS)			
°C	°F	100 Ω PT (IEC 60751)	120 Ω NI	100 Ω NI	10 Ω CU
–40	–40	84.27	92.76	77.30	7.49
–30	–22	88.22	99.41	82.84	7.88
–20	–4	92.16	106.15	88.45	8.26
–10	14	96.09	113.00	94.17	8.65
0	32	100.00	120.00	100.00	9.04
10	50	103.90	127.17	105.97	9.42
20	68	107.79	134.52	112.10	9.81
30	86	111.67	142.06	118.38	10.19
40	104	115.54	149.79	124.82	10.58
50	122	119.40	157.74	131.45	10.97
60	140	123.24	165.90	138.25	11.35
70	158	127.08	174.25	145.20	11.74
80	176	130.90	182.84	152.37	12.12
90	194	134.71	191.64	159.70	12.51
100	212	138.51	200.64	167.20	12.90
110	230	142.29	209.85	174.87	13.28
120	248	146.07	219.29	182.75	13.67
130	266	149.83	228.96	190.80	14.06
140	284	153.58	238.85	199.04	14.44
150	302	157.33	248.95	207.45	14.83
160	320	161.05	259.30	216.08	15.22
170	338	164.77	269.91	224.92	15.61
180	356	168.48	280.77	233.97	16.00
190	374	172.17	291.96	243.30	16.39
200	392	175.86	303.46	252.88	16.78
210	410	179.53	315.31	262.76	17.17
220	428	183.19	327.54	272.94	17.56
230	446	186.84	340.14	283.45	17.95
240	464	190.47	353.14	294.28	18.34
250	482	194.10	366.53	305.44	18.73

Note:
RTD type copper (Cu) is only available when order code option 'S' is chosen for Slot B or C.

RTD Protection

The relay can monitor up to 13 RTDs and 12 RRTDs, each of which can be configured to have a trip temperature and an alarm temperature. The RTD Temperature protection menu will be seen on the relay upon availability of RTD input/inputs. The RRTD Temperature protection setpoints can be seen only if the relay has the RMIO module installed and validated. The minimum RTD Temperature requirement is to set the setpoint ***TYPE***. The default value for ***TYPE***, for each RTD is `100 Ω Platinum`. The protection RTD Trip, and RTD Alarm from the menu are optional. They respond to directly measured RTD temperature. The Alarm temperature is set slightly above the normal measured temperature for the transformer top-oil, bottom-oil, or LTC oil. The Trip temperature is normally set at the maximum permissible oil temperatures defined as dangerous for the transformer and the transformer insulation.

This element also monitors the RTD broken connection and blocks the RTD trip and alarm functions if the RTD connection is detected as Open or Shorted and generates RTD Open and RTD Shorted FlexLogic operands. An RTD is detected as Open when the RTD connection is either open or the temperature is greater than 250°C. An RTD is detected as Shorted when the RTD connection is either shorted or the temperature is equal to less than -40°C.

> *Note:*
> *The RTD input is active regardless of whether or not, the RTD Trip, or/and RTD Alarm functions are enabled.*

Path:*Setpoints* > *RTD Temperature* > *RTD 1[X]*

Path:*Setpoints* > *RRTD Temperature* > *RRTD 1[X]*

TRIP FUNCTION

Range: Disabled, Trip, Configurable

Note: Relays with firmware version 4 and later have a Latched Trip option

Default: Disabled

If a trip is not required from the RTD, select `Configurable`. This enables the RTD without producing a trip.

NAME

Range: Up to 13 alphanumeric characters

Default: RTD 1

TYPE

Range: 100 Ω Platinum, 100 Ω Nickel, 120 Ω Nickel, 10Ω Copper

Default: 100 Ω Platinum

Selects the type of the RTD used.

TRIP TEMPERATURE

Range: 1°C to 250°C in steps of 1°C (33°F to 482°F in steps of 2°F)

Default: 155°C (311°F)

TRIP PICKUP DELAY

Range: 0 s to 600 s in steps of 1 s

Default: 2 s

TRIP DROPOUT DELAY

Range: 0 s to 600 s in steps of 1s

Default: 0 s

TRIP OUTPUT RELAY X

Range: Do Not Operate, Operate

Default: Do Not Operate

ALARM FUNCTION

Range: Disabled, Alarm, Latched Alarm

Default: Disabled

ALARM TEMPERATURE

Range: 1°C to 250°C in steps of 1°C (33°F to 482°F in steps of 2°F)

Default: 130°C (266°F)

ALARM PICKUP DELAY

Range: 0 s to 600 s in steps of 1 s

Default: 2 s

ALARM DROPOUT DELAY

Range: 0 s to 600 s in steps of 1 s

Default: 0 s

ALARM OUTPUT RELAY X

Range: Do Not Operate, Operate

Default: Do Not Operate

BLOCK

Range: Off, Any FlexLogic operand

Default: Off

EVENTS

Range: Disabled, Enabled

Default: Enabled

TARGETS

Range: Disabled, Self-reset, Latched

Default: Latched

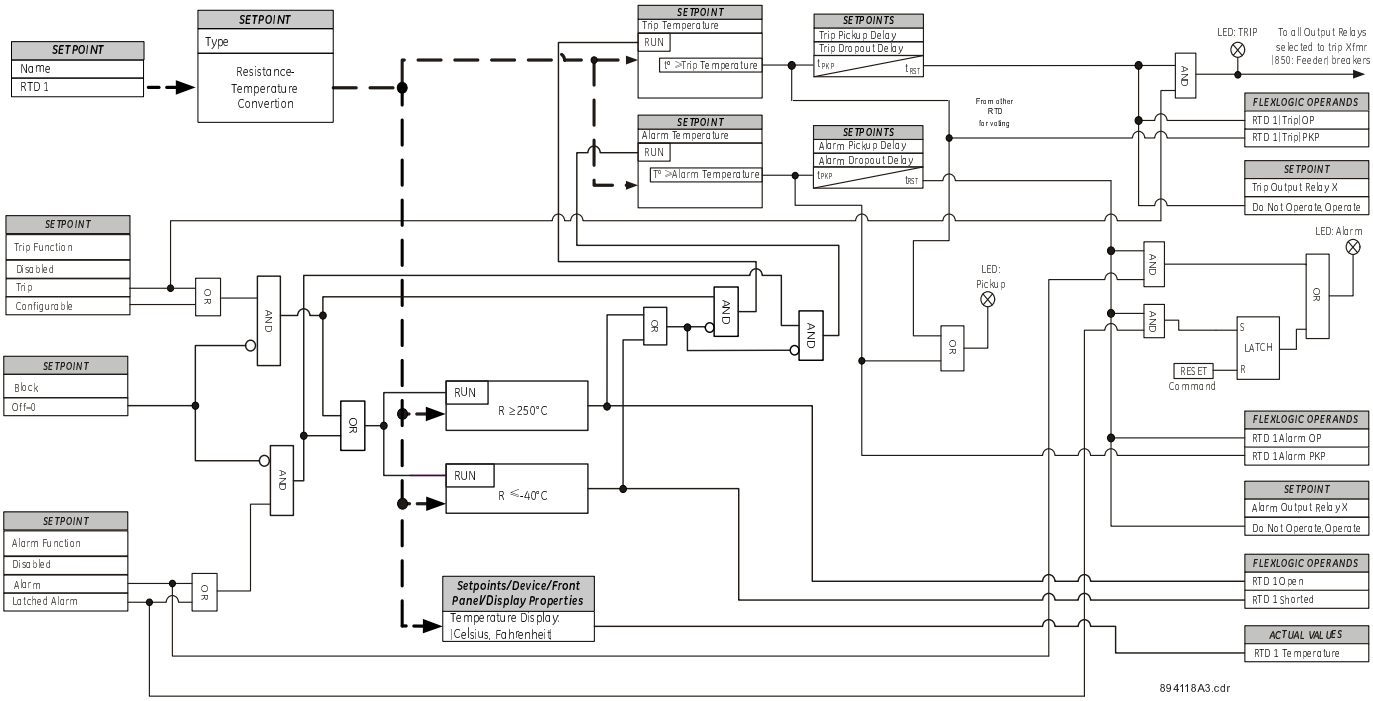

Figure 196: RTD Protection logic diagram

9.7.2 RTD TROUBLE

When set to Alarm or Latched Alarm, this element monitors all the RTDs that are either programmed as Alarm or Trip or Configurable and generates an alarm if any of the RTDs are detected as Open or Shorted. Upon detection of an RTD Open or Shorted condition, the element also asserts the RTD Trouble PKP and RTD Trouble OP and operates the assigned output relay. Both RTDs and RRTDs can be monitored using this element.

Path: ***Setpoints*** > ***Monitoring*** > ***RTD Trouble***

FUNCTION

Range: Disabled, Alarm, Latched Alarm

Default: Disabled

ALARM OUTPUT RELAY X

Range: Do Not Operate, Operate

Default: Do Not Operate

EVENTS

Range: Disabled, Enabled

Default: Enabled

TARGETS

Range: Disabled, Self-reset, Latched

Default: Latched

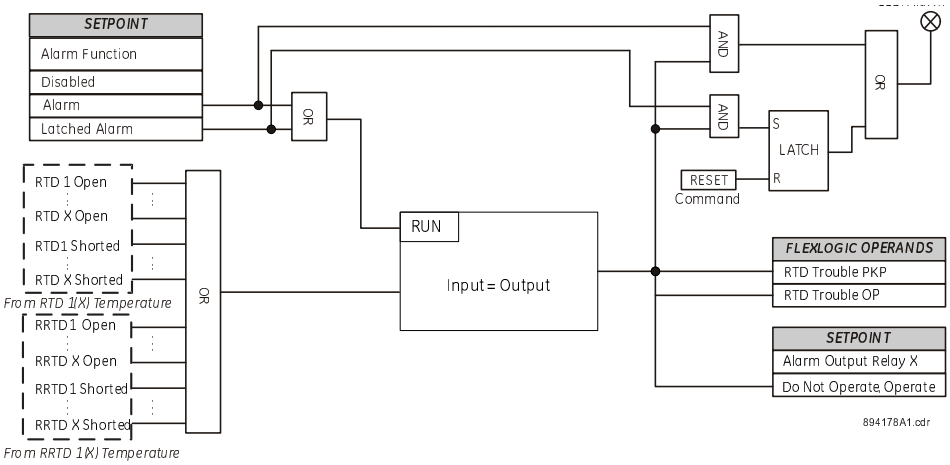

Figure 197: RTD Trouble logic diagram

9.8 LOSS OF COMMUNICATIONS

This section covers the functionality of the Loss of Communications element.

The relay monitors activity on an interface via the configured protocol for this interface. The communications status is set for each protocol.

If communication is lost, the enabled interface will issue a *Loss of Comms* event and operate a combination of output relays/states.

> *Note:*
> *The **MODBUS ACTIVITY TIMEOUT** specifies the minimum time without Modbus communication. This timeout is used to declare the Modbus 'Loss of Communication' state. The **MODBUS ACTIVITY TIMEOUT** must be set to a value other than 0 for the Loss of Communication"monitoring to work properly.*

> *Note:*
> ***MODBUS ACTIVITY TIMEOUT** is set under: **Setpoints** > **Device** > **Communications** > **Modbus Protocol***

Path: ***Setpoints*** > ***Monitoring*** > ***Loss of Comms***

FUNCTION

Range: Disabled, Trip, Alarm, Latched Alarm, Configurable

Note: Relays with firmware version 4 and later have a Latched Trip option

Default: Disabled

INTERFACE

Range: Serial, Serial + Ethernet, Ethernet, All

Default: Serial

Only the protocols associated with the selected interface are shown in this screen as options. For example, if "Ethernet" is selected, select the Ethernet protocols to monitor. The Ethernet protocols selection is defined as EthernetProtocolBitmask bitmasks.

MODBUS

Range: Off, On

Default: Off

PICKUP DELAY

Range: 0 to 600 s in steps of 1

Default: 2 s

OUTPUT RELAY X

Range: Do Not Operate, Operate

Default: Do Not Operate

BLOCK

Range: Off, Any FlexLogic operand

Default: Off

EVENTS

Range: Disabled, Enabled

Default: Enabled

TARGETS

Range: Disabled, Self-reset, Latched

Default: Latched

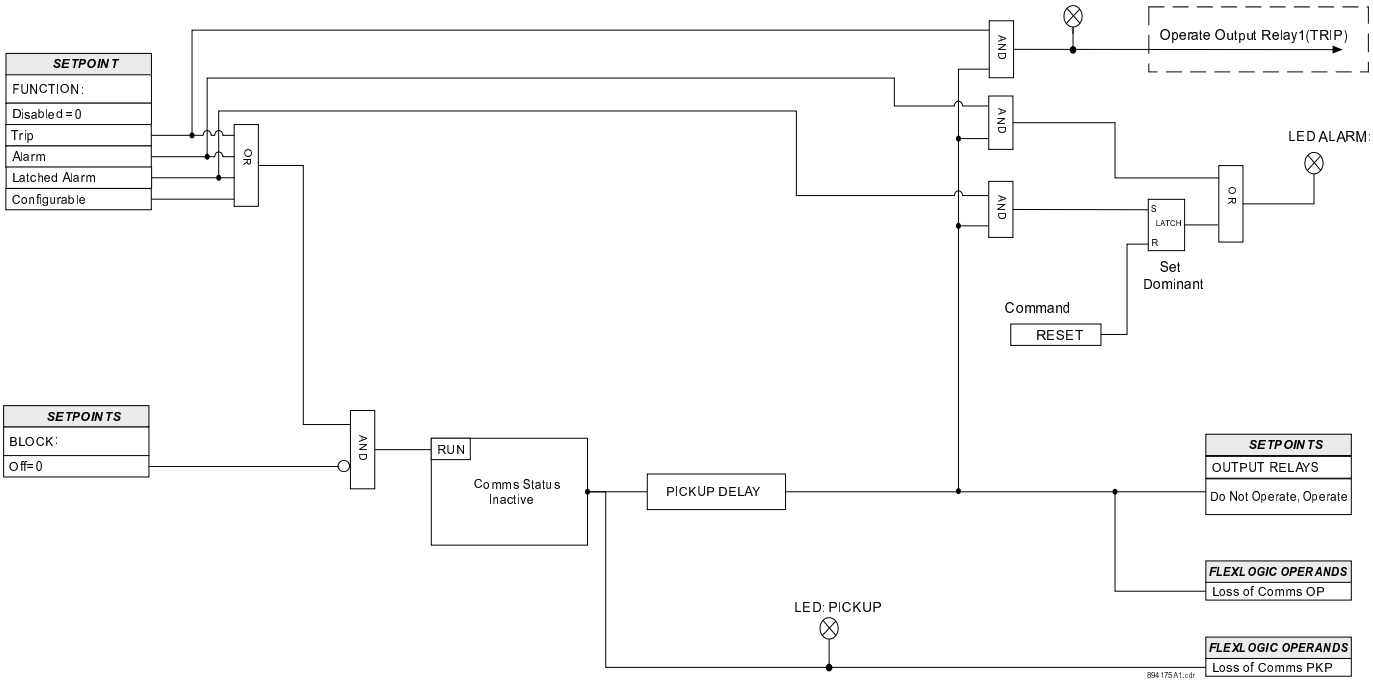

Figure 198: Loss of Communications logic diagram

CHAPTER 10

CONTROL

10.1 CHAPTER OVERVIEW

This chapter contains the following sections:

Chapter Overview	480
Control Overview	481
Setpoint Group	482
Generator control	484
Local Control Mode (Breaker and Switches)	489
Breaker Control	497
Switch Control (89)	501
Virtual Input Control	504
Trip Bus	505
Breaker Failure (50BF)	508
Arc Flash Protection	514
Synchrocheck (25)	517
VT Fuse Failure (VTFF)	522

10.2 CONTROL OVERVIEW

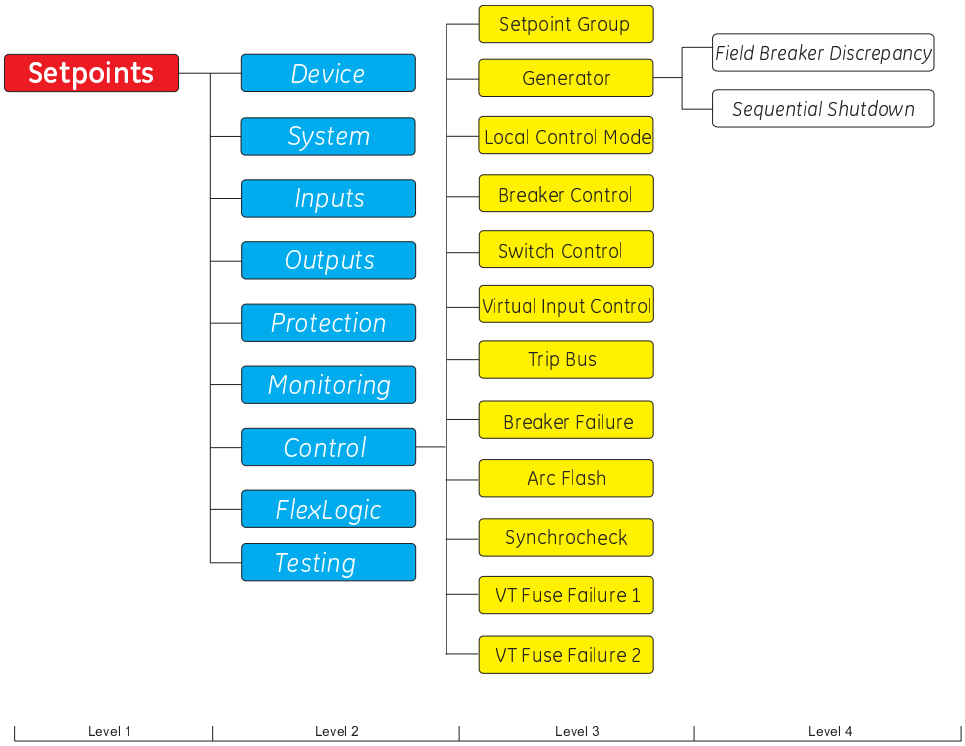

Figure 199: Control Display Hierarchy

10.3 SETPOINT GROUP

The relay provides six setpoint groups. All setpoints contained under the protection setpoints are reproduced in six groups, identified as Setpoint Groups 1, 2, 3, 4, 5 and 6. These multiple setpoints provide the capability for both automatic and manual switching to protection settings for different operating situations. Automatic (adaptive) protection setpoint adjustment is available to change settings when the power system configuration is altered.

Automatic group selection can be initiated from the autoreclose, ***SETPOINT GROUPS*** and by use of a ***SET GROUP x ACTIVE*** setpoint input. The group selection can be initiated by this input from any FlexLogic operands, inputs, pushbuttons or communications.

Group 1 is the default for the Active Group and is used unless another group is requested to become active. The active group can be selected with the ***ACTIVE SETPOINT GROUP*** setpoint, by ***SET ACTIVE x GROUP*** input or inputs from autoreclose, ***SETPOINT GROUPS***. If there is a conflict in the selection of the active group, between a setpoint, inputs and inputs from functions, the higher numbered group is made active. For example, if the inputs for Group 2, 4, and 6 are all asserted the relay uses Group 6. If the logic input for Group 6 then becomes de-asserted, the relay uses Group 4. Some application conditions require that the relay does not change from the present active group. This prevention of a setpoint group change can be applied by setting Change Inhibit inputs (1 to 16). If needed, typically this change inhibit is done when any of the overcurrent (phase, neutral, ground, or negative sequence), overvoltage, bus or line undervoltage, or underfrequency elements are picked-up.

Path: ***Setpoints*** > ***Control*** > ***Setpoint Groups***

ACTIVE SETPOINT GROUP

Range: 1,2,3,4,5,6

Default: 1

The ***ACTIVE SETPOINT GROUP*** setting is used for manual selection of the Active Setpoint Group.

SET GROUP 2 (3,4,5,6) ACTIVE

Range: Off, Any FlexLogic operand

Default: Off

The setpoint selects the FlexLogic operand that initiates change of the ***ACTIVE SETPOINT GROUP***.

SET GROUP 2 (3,4,5,6) ACTIVE

Range: Off, Any FlexLogic operand

Default: Off

The setpoint selects the FlexLogic operand that initiates change of the ***ACTIVE SETPOINT GROUP***.

> *Note:*
> ***SET GROUP 2*** *defaults to* ***PB 8 ON (ALT SETTING)*** *for some order codes.*

GROUP CHANGE INHIBIT 1 (UP TO 16)

Range: Off, Any FlexLogic operand

Default: Off

The setpoint selects the FlexLogic operand that inhibits change of the active setpoint group.

EVENTS

Range: Disabled, Enabled

Default: Enabled

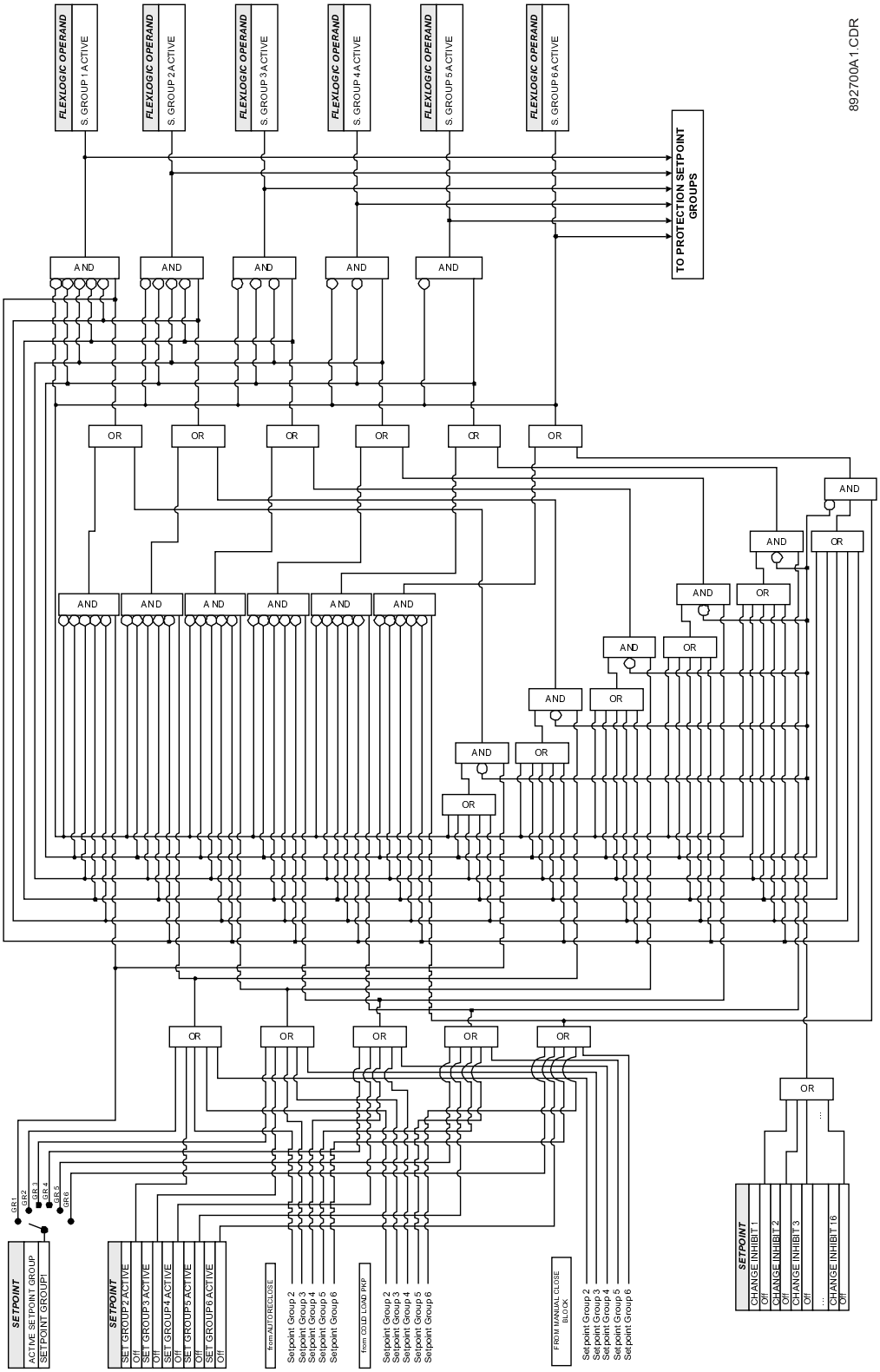

Figure 200: Setpoint Groups logic diagram

10.4 GENERATOR CONTROL

10.4.1 FIELD BREAKER DISCREPANCY

The field breaker discrepancy function is intended for use with synchronous generators. If a digital input is assigned to this function the following condition applies:

Any time the **field status** contact indicates the field is not applied AND the generator status indicates that the generator is online, a trip occurs once the time delay expires.

The time delay may be used to prevent possible nuisance tripping during shutdown. The field breaker status contact type can be selected as either `Auxiliary 52a` or `Auxiliary 52b`.

Path: ***Setpoints*** > ***Control*** > ***Generator*** > ***Field Breaker Discrepancy***

FUNCTION

Range: Disabled, Trip, Alarm, Latched Alarm, Configurable

Default: Disabled

ASSIGN DIGITAL INPUT

Range: Off, FlexLogic Operand

Default: Off

This setting assigns the digital input, which represents the status of the field breaker.

FIELD STATUS CONTACT

Range: Auxiliary 52a, Auxiliary 52b

Default: Auxiliary 52a

For `Auxiliary 52a`: Closed (Digital Input = 1) indicates that the field breaker is closed.

For `Auxiliary 52b`: Open (Digital Input = 0) indicates the field breaker is closed.

PICKUP DELAY

Range: 0.10 to 600.00 s in steps of 0.01 s

Default: 1.00 s

OUTPUT RELAY

Range: Do Not Operate, Operate

Default: Do Not Operate

BLOCK

Range: Off, Any FlexLogic operand

Default: Off

EVENT:

Range: Enabled, Disabled

Default: Enabled

TARGET:

Range: Self-reset, Latched, Disabled

Default: Self-reset

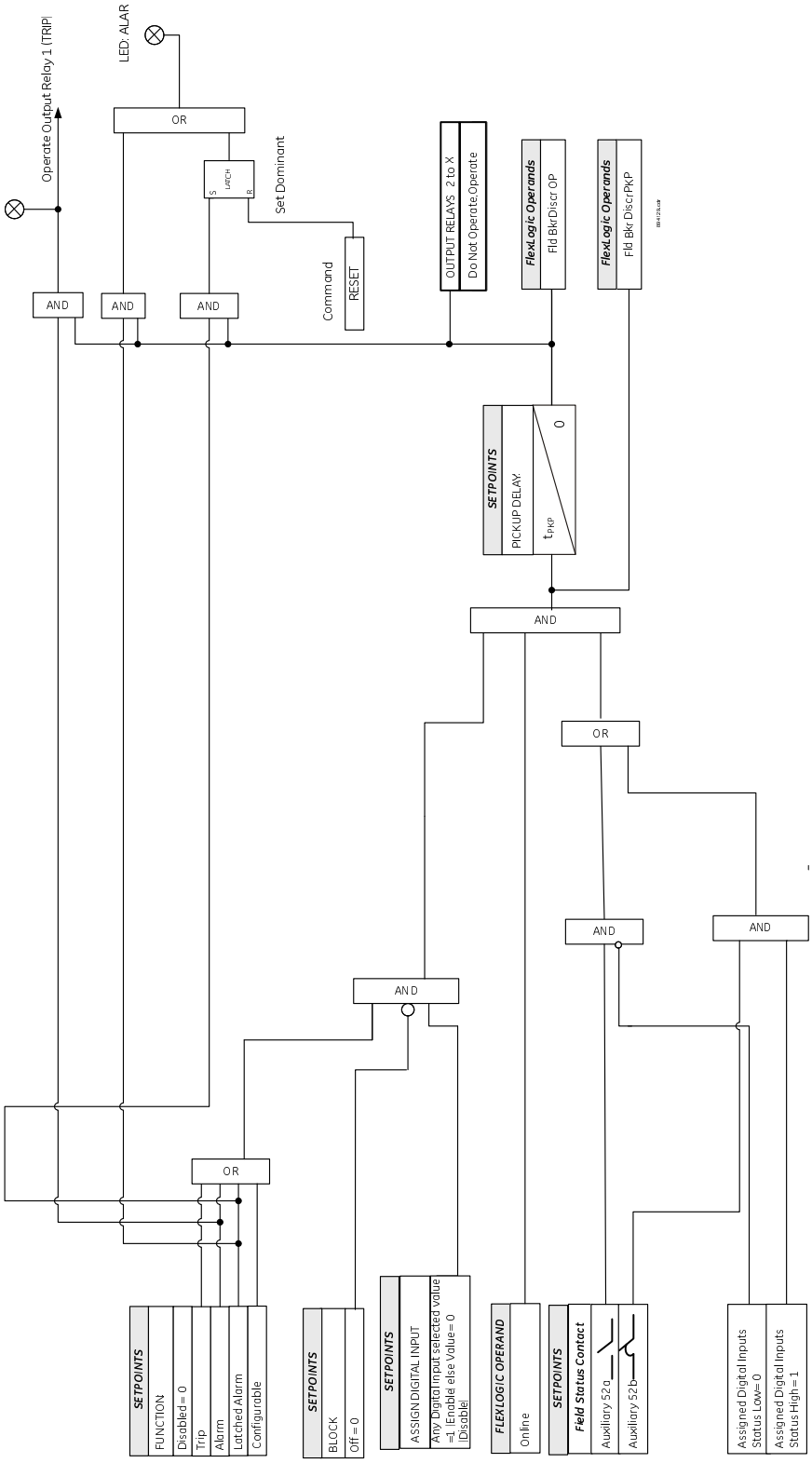

Figure 201: Field Breaker Discrepancy Logic Diagram

10.4.2 SEQUENTIAL SHUTDOWN

During routine shutdown and for less critical trips, it may be desirable to use the sequential shutdown function to prevent overspeed. Any FlexLogic operand (e.g. Digital Inputs) can be assigned as *arming input* to enable this function. The arming input enables either a low forward power or reverse power function, based on the power direction setting selection. Once the measured 3-phase total power falls below the forward power level or exceeds the reverse power level for the period of specified time, a trip will occur. This time delay will typically be shorter than that used for standard reverse power or low forward power elements. The level is programmed per unit of generator rated MW calculated from the rated MVA and rated power factor.

> *Note:*
> *A reverse power element may not be suitable when set to a very low setting, particularly under conditions of large reactive loading on the generator. Under such conditions, we recommend low forward power.*

Path: ***Setpoints*** > ***Control*** > ***Generator*** > ***Sequential Shutdown***

FUNCTION

Range: Disabled, Trip, Alarm, Latched Alarm, Configurable

Default: Disabled

ARMING INPUT

Range: Off, Any FlexLogic operand

Default: Off

This setting selects a specific arming input from FlexLogic operands. Normally, sequential shutdown is armed/ initiated from digital input (from an external device).

> *Note:*
> *NOTE: The **Arming Input** should remain ON/latched until the sequential shutdown operation is executed.*

POWER DIRECTION

Range: Forward, Reverse

Default: Forward

This setting provides options for the direction of power flow.

PICKUP MW LEVEL

Range: 0.02 to 0.99 x Rated in steps of 0.01

Default: 0.05 x Rated

When the measured 3-phase total power falls below the setting of the forward pickup power level, or exceeds the reverse power pickup level for the period of time specified, an OP operant is issued.

PICKUP DELAY

Range: 0.20 to 180.00 s in steps of 0.01 s

Default: 10.00 s

OUTPUT DELAY

Range: Do Not Operate, Operate

Default: Do Not Operate

BLOCK

Range: Off, Any FlexLogic operand

Default: Off

EVENT:

Range: Enabled, Disabled

Default: Disabled

TARGET:

Range: Self-reset, Latched, Disabled

Default: Self-reset

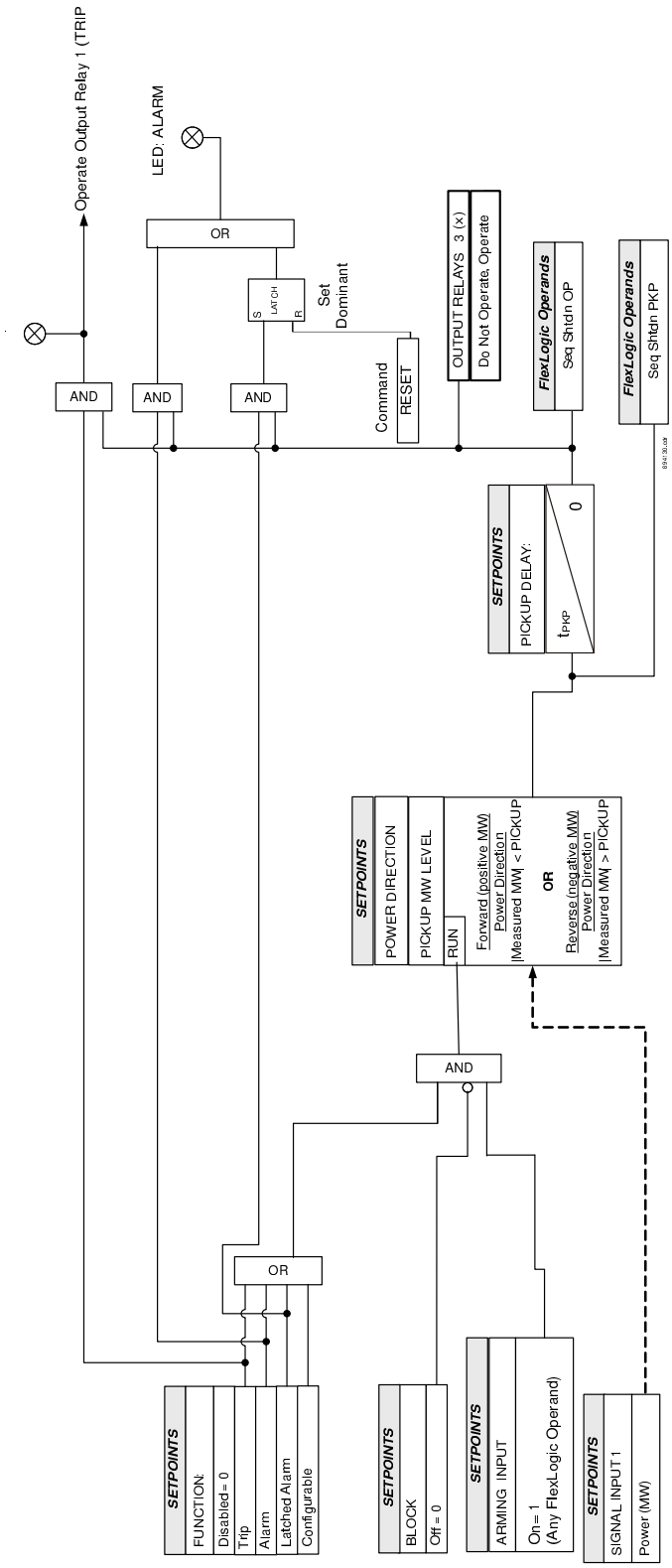

Figure 202: Sequential Shutdown Logic Diagram

10.5 LOCAL CONTROL MODE (BREAKER AND SWITCHES)

When the setpoint ***LOCAL MODE*** is enabled, Open and Close control of breakers and switches is performed using relay pushbuttons (PBs), or contact inputs from PBs installed in close proximity to the relay (such as on the relay panel, or in the relay cubicle).

The addition of contact inputs an other FlexLogic operands for closing and opening the breaker, or switch while in local mode provides the flexibility to use PBs mounted near the relay.

> *Note:*
> *Note that one pair of PBs is used for breaker control, and another pair of PBs is used for switch control.*

If contact inputs or other FlexLogic operands are used while the Select Before Operate (SBO) mechanism is enabled, the breaker or the switch shall first be selected using the relay PBs, and then opened or closed using the designated relay panel or cubicle PBs. (The ***SELECT BEFORE OPERATE*** setpoint is only available for relays supporting a single breaker.) If the SBO mechanism is disabled while the relay supports configurable single line diagrams (SLDs), only the breaker PBs either on the relay front panel or mounted nearby will work. The menu setpoints for local switch Open and Close are hidden and deactivated.

If the relay does not support configurable SLD, the setpoints for local switch Open and Close are omitted from the menu.

While in Local Mode, the letters LM are displayed on the relay display banner. In addition, an LED can be programmed to turn ON when the relay is set to Local Mode. By default the relay comes with one LED programmed to show Local Mode.

In Local Mode, control for the breakers and disconnect switches can be accessed from the relay front panel (PBs programmed for Open and Close) or by contact inputs for Open and Close from PBs installed near the relay. Hard coded SLD PBs are designated for Tag, Block and Bypass Block for each component upon selection. In this mode, the ***LOCAL OPEN*** and ***LOCAL CLOSE*** setpoints for Breaker Control or Switch Control (see the respective logic) are active.

Remote Mode

When Remote Mode is enabled, the switches are controlled (open/close) from any assigned FlexLogic operand, contact input, virtual input, virtual output, remote input, or via communication. The Control Mode menu is designed to switch the control for both breakers and switches to either Remote Mode (***LOCAL MODE*** setpoint set to Off, or the selected Local Mode input de-asserted), or Local Mode (***LOCAL MODE*** setpoint asserted).

Breaker Mode defaults

The default value is `Local`.

Navigation

The 8 Series front panel provides navigation pushbuttons (PBs) which highlight the component (breaker or disconnect switch) from the single line diagram. The navigation PBs (Up/Down or Up/Down/Left/Right depending on relay front panel model), are used to browse through the Single Line Drawing (SLD) components. These PBs are used for SLD navigation only. The navigation starts with highlighting the first breaker, and then goes through all other components in sequence, until the last one (breaker or switch). Only the breakers and switches included in the SLD from the display will be browsed (navigated).

Select Before Operate

Once the breaker or the switch is highlighted in the SLD using the navigation PBs, the component must be selected before open or close action is performed. The selection of the component is performed by pressing “ENTER” key from the front panel. A flash message `BKR # Selected`, or `Sw # Selected` appears on the screen to denote the selection. Once selected, the text from the first three tabs from the display corresponding to the PBs 1, 2, and 3

changes to **Tag**, **Block**, and **Bypass**. At this stage, the selected breaker or switch can be Opened or Closed using the programmed PBs, and Tagged/Blocked/Bypassed using the SLD PBs.

For PBs supporting one breaker only, the Local Control Mode menu includes the setpoint ***SELECT BEFORE OPERATE***, which can be set to either Enabled or Disabled. When it is set to Disabled, tagging, blocking and block bypassing commands are disabled from both Local and Remote control. In this mode the breaker can be controlled directly by the programmed Open and Close PBs. The local control for the disconnect switches is suspended. In this mode they can only be controlled remotely, i.e. using pre-programmed contact inputs, virtual inputs, comms, or any selected FlexLogic operand for closing and opening commands. The remote block and block bypass flags are also suspended. With ***SELECT BEFORE OPERATE*** set to Disabled the relay behaves similar to some other legacy relays, where when in Local mode the breaker is directly controlled by pressing the Open and Close PBs without additional confirmation, and when in Remote mode the breaker is directly controlled by executing the remote open and close commands from the configured setpoints.

When the ***SELECT BEFORE OPERATE*** setpoint is set to Enabled, the navigation, the breaker or switch selection, as well as the blocking, bypassing and tagging are operational when in Local mode. When switched to Remote mode, the remote blocking and bypassing will also be operational.

> *Note:*
> *The selected component from SLD will be deselected if either the time programmed in setpoint **Bkr/Sw Select Timeout** expires, or the **ESCAPE** pushbutton is pressed. The **HOME** button will not de-select the selected object. To navigate to home page, the component must be first de-selected on the SLD page.*

The programmed PBs for breaker or switch Open and Close can be used only in local mode when an active object is selected in the SLD. The selected device can be opened or closed provided it is not blocked or tagged. If no operation is detected, the selection is removed, and the selected PB must be pressed again to enable the selection. The local mode breaker selection and operation is only active if the user has proper level security access.

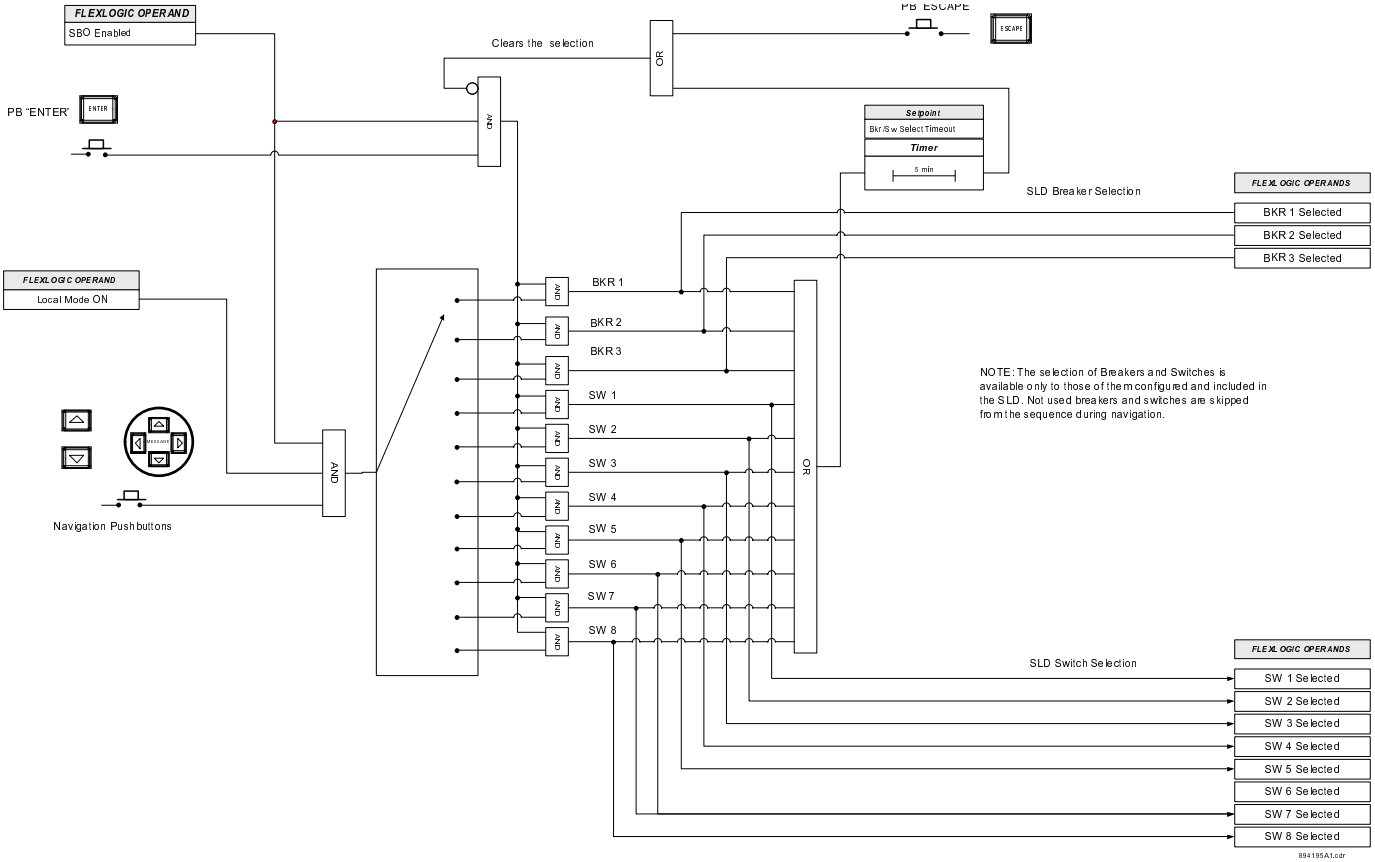

Figure 203: Navigation and SLD component selection

PB Block (Hard coded SLD Pushbutton)

Blocking of a breaker or switch can be used for inhibiting the close or open operation while in Local Mode. The selected breaker or disconnect switch can be blocked. If block was not applied to the selected component, pressing the **Block** PB will block either the Open or Close command depending on the existing state. When the block is active, the letter **B** appears in the SLD next to the controlled component

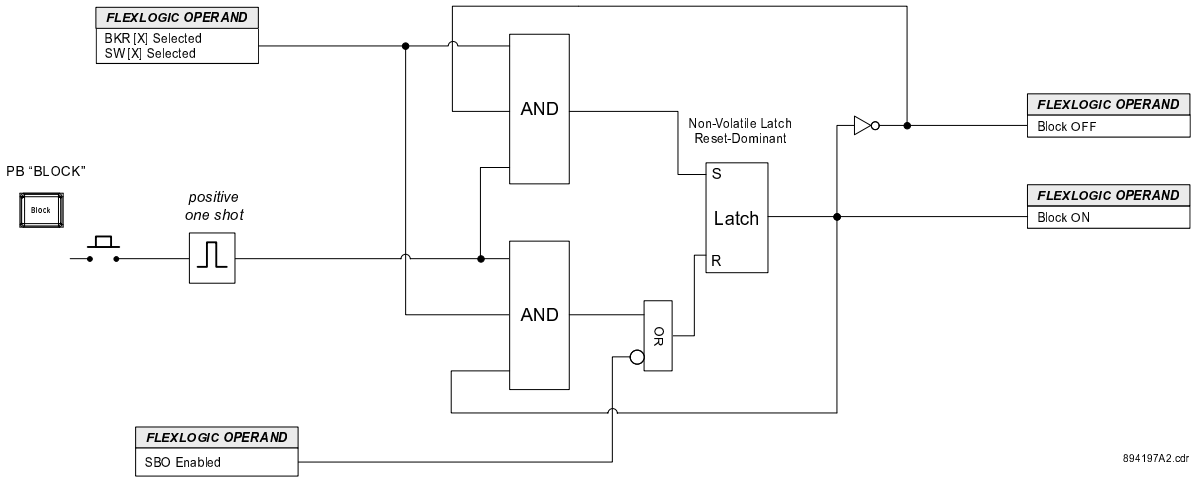

Figure 204: SLD Pushbutton Block logic diagram

PB Bypass (Hard coded SLD Pushbutton)

Blocking of the command can be bypassed using the SLD pushbutton **Bypass**. When pressed, the previously applied block is bypassed. For example if the block was applied when the Breaker/Switch was opened, pressing the PB **Bypass** will allow closing command. If the bypass is active for the selected breaker or switch, the letters **By** appear next to the symbol in the SLD.

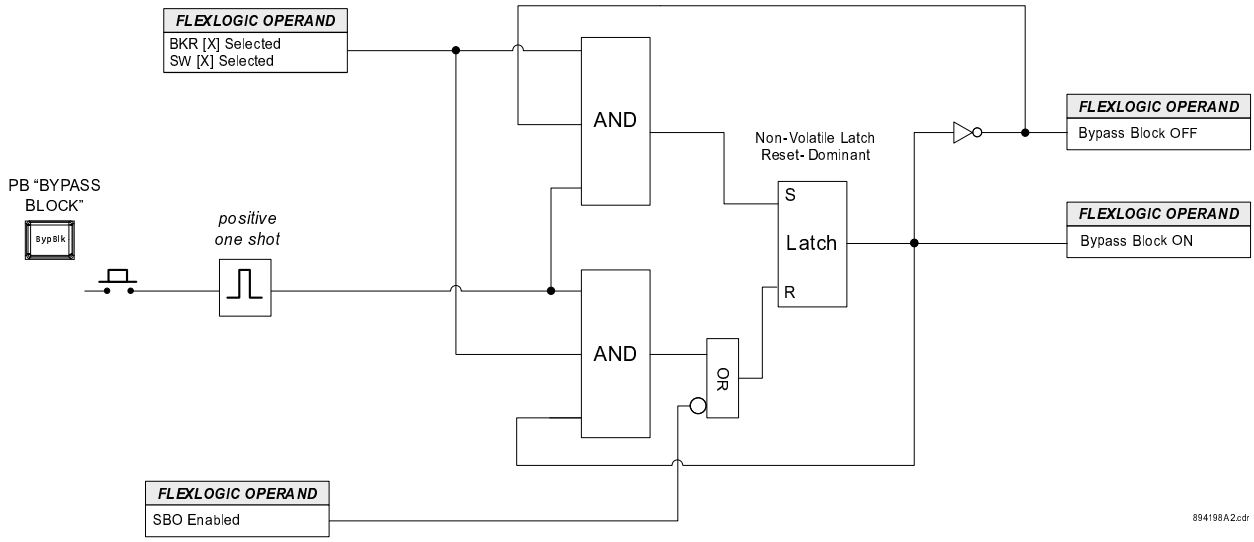

Figure 205: SLD Pushbutton Bypass Block logic diagram

PB Tag (Hard coded SLD pushbutton)

Lockout/Tagout is a practice and procedure to safeguard employees from unexpected energization or startup of machinery and equipment, or hazardous energy during service or maintenance activities. If a breaker or disconnect switch is tagged, the open and close controls are inhibited.

Both remote and local control commands are blocked if the tagged operand BKR# Tag ON, or SW# Tag ON is active for the selected particular breaker or switch respectively. The breaker or switch is tagged by pressing the

SLD pushbutton **Tag**. If the selected switching device is tagged, a letter **T** appears under its symbol. Tagging can be achieved in local mode using the front panel control from the configurable SLD screens. The Pushbutton Tag logic diagram shows the tagging logic diagram for a switch. The logic applies to one breaker or switch at the time in the single line diagram.

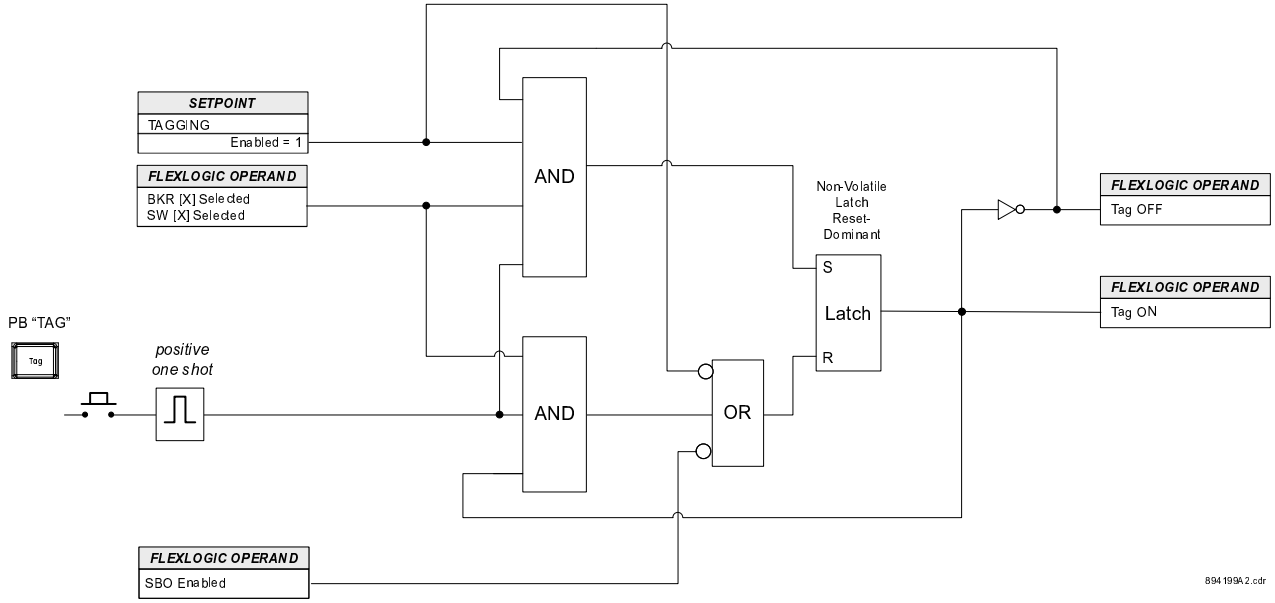

Figure 206: Pushbutton Tag logic diagram

Note:
The pushbuttons, Tag, Block and Bypass Block are used for both breakers and switches when selected in the SLD. Only one component at the time can be selected in the SLD.

Note:
Tagging, blocking, or bypassing block can be performed in Local Mode, and only when the component (breaker or switch) is selected in the SLD. The applied action of tagging, blocking or bypassing block is retained for this component after it's been deselected. To change the status of the applied action, the component need be reselected.

Note:
The Local Mode control allows programming of separate pair of PBs for Open and Close commands to breakers and for Open and Close commands to switches. If desired, one pair of pushbuttons can be programmed for Open and Close commands to both breakers and switches.

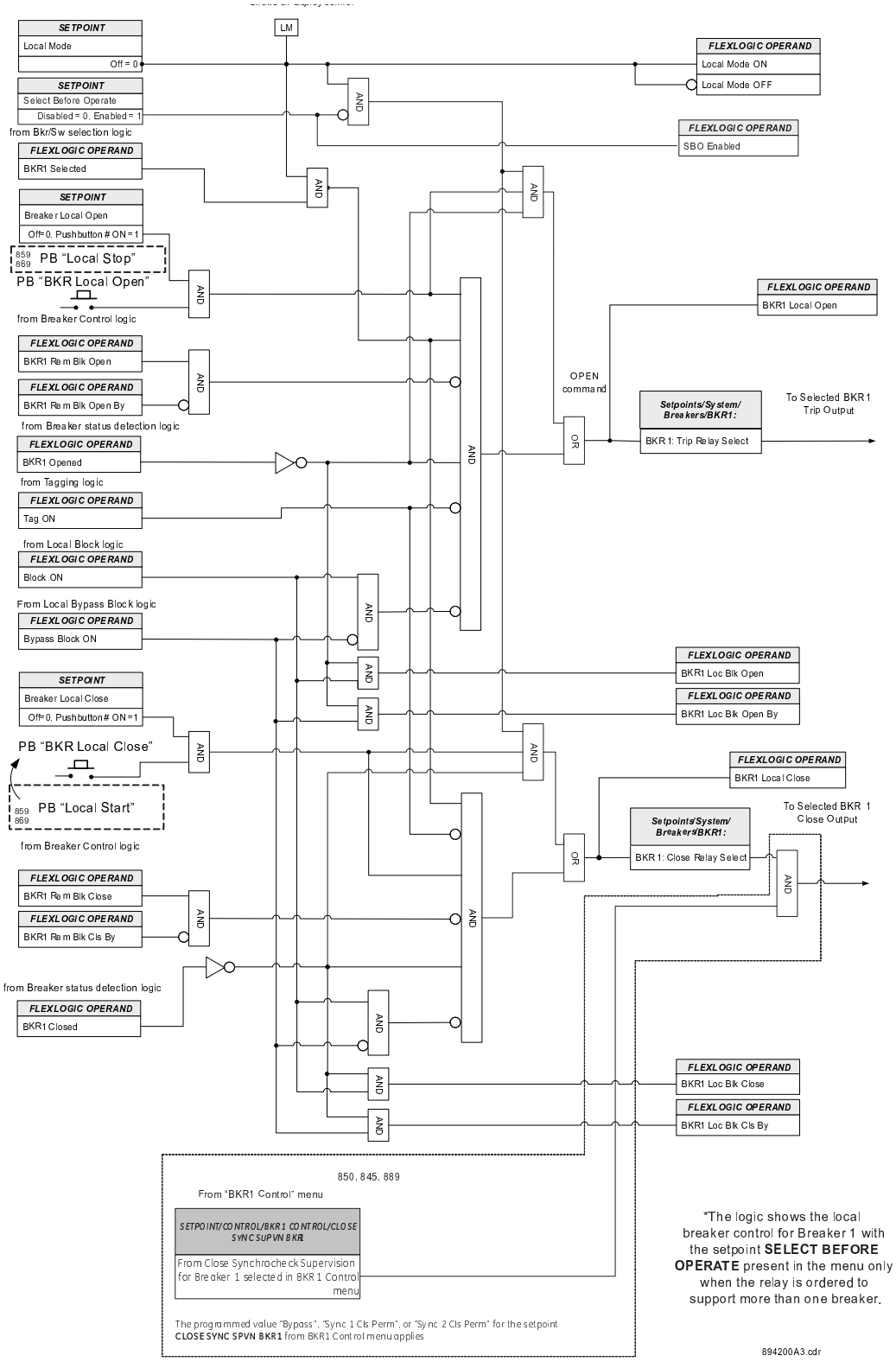

Figure 207: Local Control for breakers

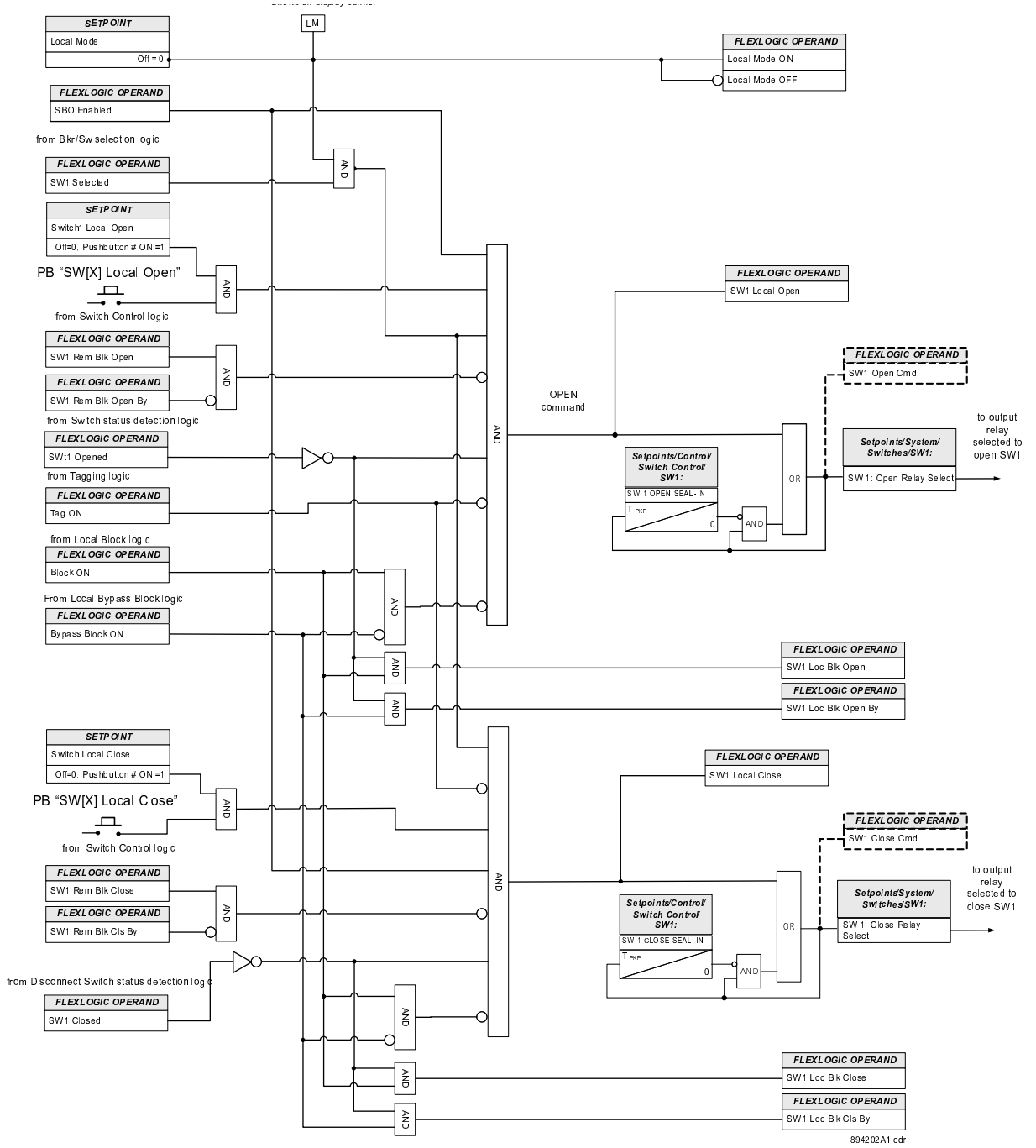

* The logic shows the local control for Disconnect Switch 1 when Select Before Operate setpoint is set to Enabled. The local switch control is not available when SBO is set to Disabled.

Figure 208: Local Control for Switches

Path: ***Setpoints*** > ***Control*** > ***Local Control Mode***

For this path the HMI menus vary depending on the order code and the number of breakers selected.

Note:
*For relays supporting single breaker control, the SW Local Open and SW Local Close setpoints appear in the menu only if the relay is ordered with Advanced SLD; and the **SELECT BEFORE OPERATE** setpoint is enabled. In all other cases, these setpoints are hidden and inactive.*

SELECT BEFORE OPERATE

Range: Disabled, Enabled

Default: Disabled (in most cases, but dependent on order code)

This setpoint is included in the Local Control Mode menu only if the 8 Series relay supports one breaker. This setpoint is omitted for relays supporting more than one breaker.

When the Select Before Operate (SBO) is disabled, and Local Mode is set, the breaker control can be performed directly by pressing the corresponding front panel pushbuttons (or those mounted in close proximity to the relay). No component selection or additional confirmation is needed. The same applies when the breaker control is in Remote mode.

Note:
When SBO is disabled, all local and remote flags such as blocking, bypassing, and tagging are reset.

Setting the SBO to Enabled enables the navigation and the selection of a component from the SLD, so that the pushbuttons Open or Close from the front panel (or those mounted in close proximity to the relay) can be used in Local Mode only after the component is selected. All flags such as blocking, bypassing and tagging can be initiated during this mode. Blocking and bypassing can also be initiated remotely, when in Remote Mode.

LOCAL MODE

Range: Off, On, Any FlexLogic operand

Default: On or Pushbutton 5 Off

The ***LOCAL MODE*** setting places the relay in Local Mode. The relay is in Remote mode, if not forced into Local mode by this setpoint (i.e. ***LOCAL MODE*** is disabled, or the selected input de-asserted). When in Local Mode, both Breakers and Disconnect switches can be controlled using the faceplate pushbuttons and SLD pushbuttons.

BKR /SW SELECT TIMEOUT

Range: 1 to 10 min in steps of 1 min

Default: 5 min

This setting specifies the available time for open/close commands, after a breaker or a disconnect switch has been selected in the single line diagram.

BKR(CONTACTOR) LOCAL OPEN

Range: Off, Any FlexLogic operand

Default: Pushbutton 1 ON

This setpoint is active, when Local Mode is activated. The breaker open command can be initiated by the selected configured pushbutton.

BKR(CONTACTOR) LOCAL CLOSE

Range: Off, Any FlexLogic operand

Default: Pushbutton 2 ON

This setpoint is active, when Local Mode is activated. The breaker close command can be initiated by the selected configured pushbutton.

Note:
*When you close a selected breaker locally using a relay pushbutton, Synchrocheck supervision is used, as defined by the setting value configured for the setpoint **Close Sync Spvn BKR[X]** from the **BKR[X] Control** menu. For example, if you select the value **Sync 1 Cls Perm** in the **Close Sync Spvn BKR1** setpoint, initiation of the **BKR Local Close** command will not close BKR1 unless the Synchrocheck 1 permits closing by producing a Sync 1 Cls Perm signal*

SW LOCAL OPEN

Range: Off, Any FlexLogic operand

Default: Pushbutton 1 ON

This setpoint is active, when Local Mode is activated. The switch open command can be initiated by the configured pushbutton. The setpoint appears in the Local Control Mode menu only when advanced SLD is selected when ordering the relay.

SW LOCAL CLOSE

Range: Off, Any FlexLogic operand

Default: Pushbutton 2 ON

This setpoint is active, when Local Mode is activated. The switch close command can be initiated by the programmed faceplate pushbutton. The setpoint appears in the Local Control Mode menu only when advanced SLD is selected when ordering the relay.

TAGGING

Range: Enabled, Disabled

Default: Enabled

When enabled, tagging control is enabled and the TAG key is displayed on the front panel interface. When a breaker or a switch is tagged both the local and remote control of the device is inhibited.

Note:
Tagging is applied only from the TAG key and is mostly used for maintenance purposes, and in general when either the open or close control must be inhibited. The tagging cannot be bypassed and can only be disabled (untagged) by pressing the TAG key again.

EVENTS

Range: Disabled, Enabled

Default: Enabled

TARGETS

Range: Disabled, Self-reset, Latched

*Default: Self-rese*t

10.6 BREAKER CONTROL

While the Local breaker control is generic as the same front panel pushbuttons are used for control of each selected breaker from the SLD, the remote breaker control requires programming of setpoints for each individual breaker. When the relay is in Remote mode (Local Mode set to Off, or the assigned operand de-asserted), the setpoint ***REMOTE BLOCK OPEN*** and ***REMOTE BLOCK CLOSE*** from the breaker menu can be used. These setpoints can be used to provide Interlocking to the breaker control by assigning appropriate operands. The control for each breaker can be programmed to have Bypass Remote Block Open and Bypass Remote Block Close inputs. These inputs can be programmed if temporary permission for open or close is required.

The remote breaker open and close controls, as well as the blocking and bypassing the block commands are executed as per the programmed setpoints form the Breaker Control menu.

Note:
*The breaker flags **Remote Block Open**, **Remote Block Close**, **Bypass Rem Blk Open** and **Bypass Rem Blk Close** are inhibited, when the setpoint **SELECT BEFORE OPERATE** residing under Local Control Mode menu is disabled. The breaker remote open and close commands are operational.*

Note:
The relay provides control of up to three breakers, depending on the order code. An additional remote breaker status is available for HMI status only.

Path: ***Setpoints*** > ***Control*** > ***Breaker Control*** > ***BKR1(X)***

REMOTE OPEN

Range: Off, Any FlexLogic operand

Default: Off

The setting specifies the input which, when asserted, initiates a Trip command to output relay selected to open the recloser. When the selected input is asserted, the Trip contact is energized and stays energized until the input drops off, the breaker opens, and the selected Trip seal-in time expires. This setpoint provides the flexibility to operate the Trip output relay by selecting an operand from the list of FlexLogic operands, contact inputs, virtual inputs, or remote inputs. For example the operand Trip Bus 1 Op can be selected to activate this output according to the Trip conditions configured under the Trip Bus 1 menu.

REMOTE CLOSE

Range: Off, Any FlexLogic operand

Default: Off

The setting specifies the input which, when asserted, initiates a Close command to the output relay selected to close the breaker. This setpoint provides flexibility to operate the output relay by selecting an operand from the list of FlexLogic operands.

REMOTE BLOCK OPEN

Range: Off, Any FlexLogic operand

Default: Off

The assertion of the operand assigned to this setpoint prevents the breaker from opening/tripping.

REMOTE BLOCK CLOSE

Range: Off, Any FlexLogic operand

Default: Off

The assertion of the operand assigned to this setpoint prevents the breaker from closing.

BYPASS REM BLK OPEN

Range: Off, Any FlexLogic operand

Default: Off

This setting specifies selection of an input which when asserted bypasses the asserted remote block open signal. Open command is permitted for the breaker.

BYPASS REM BLK CLOSE

Range: Off, Any FlexLogic operand

Default: Off

This setting specifies selection of an input which when asserted bypasses the asserted remote block close signal. Close command is permitted for the breaker.

CLOSE SYNC SPVN BKR

Range: Bypass, Sync 1 Cls Perm

Default: order code dependent (e.g. Bypass or Sync 1Cls Perm)

This setpoint selects whether or not the closing of the breaker is supervised by the synchrocheck function. For this purpose the Synchrocheck element must be enabled.

> *Note:*
> *If the supervision is not bypassed and Close is applied for an application where the breaker is located on radial feeders, or the line is powered by one source only, the **DEAD SOURCE PERM** setpoint from the Synchrocheck menu shall not be disabled.*

BAY LEVEL 61850 AUTHORITY

Range: Off, Any FlexLogic operand

Default: Off

This selects an operand that indicates the Bay level authority status. The operand status is modeled in the IEC 61850 server using the respective breaker's CSWI Loc data object and the operand status is applied to the control authority table to determine the control authority for different levels. It is an Edge driven function.

STATION LEVEL 61850 AUTHORITY

Range: Off, Any FlexLogic operand

Default: Off

This selects an operand that indicates the Station level authority status. The operand status is modeled in the IEC 61850 server using the respective breaker's CSWI Loc data object and the operand status is applied to the control authority table to determine the control authority for different levels. It is an Edge driven function.

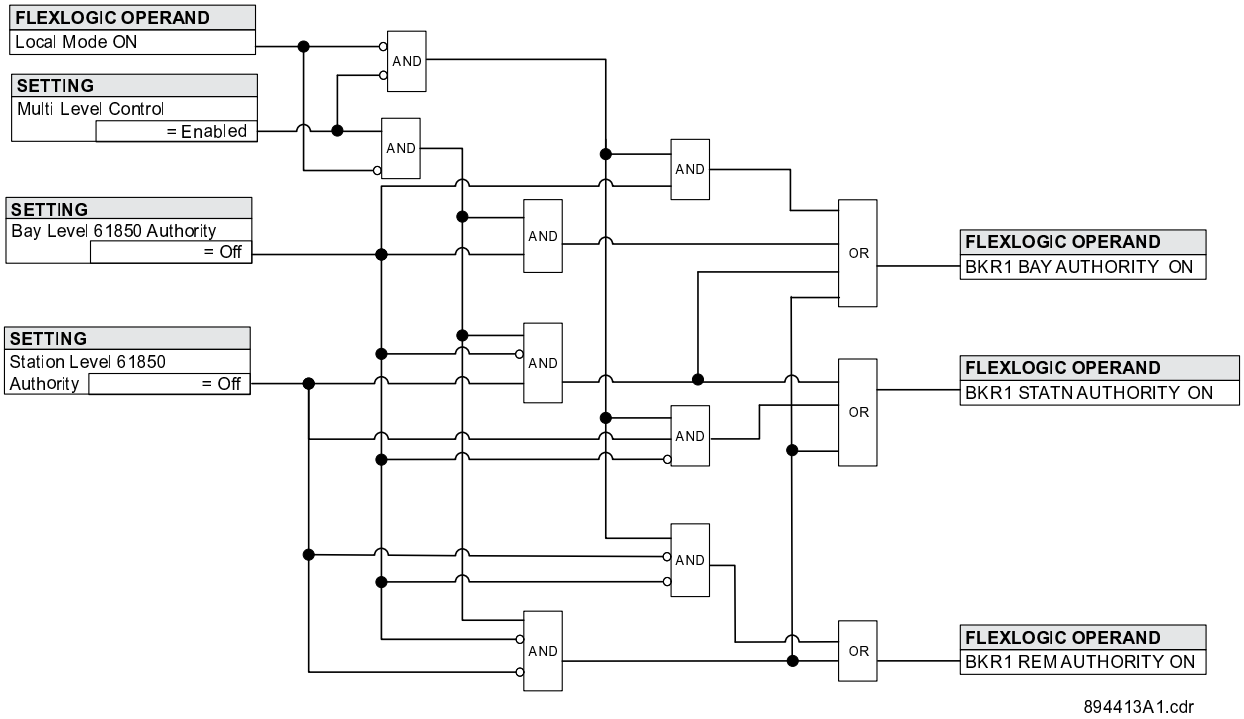

Figure 209: IEC 61850 Control Authority Settings Logic Diagram

EVENTS

Range: Disabled, Enabled

Default: Enabled

TARGETS

Range: Disabled, Self-reset, Latched

Default: Self-reset

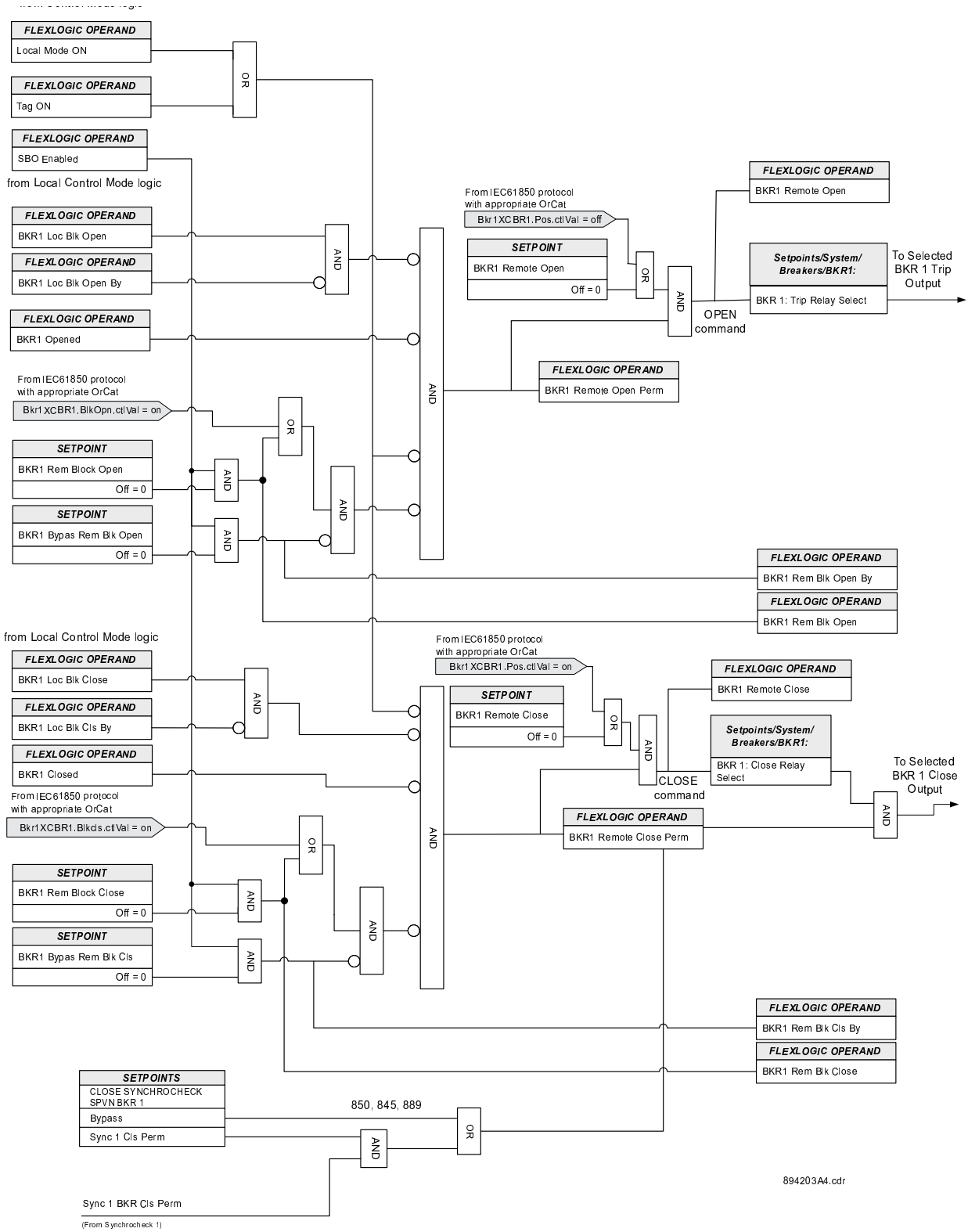

Figure 210: Breaker Control logic diagram

10.7 SWITCH CONTROL (89)

The disconnect switch control provides local and remote opening and closing of the switches. The local control (Open, Close, Tag, Block, Bypass Block) is performed from the relay front panel pushbuttons when Local Mode is active, and the switch is selected from the displayed single line diagram. The remote switch open and close controls, as well as the blocking and bypassing the block commands are executed as per the programmed setpoints form the Switch Control menu. While the Local switch control is generic and the same front panel pushbuttons are used for every selected component from the SLD, the remote switch control requires programming of setpoints per each individual switch. These settings are defined in the menu of each individual switch control. When the relay is in Remote mode (Local Mode set to Off, or the assigned operand de-asserted), the setpoint ***Remote Block Open*** and ***Remote Block Close*** from the Switch Control menus can be used. These setpoints can be used to provide Interlocking to the switch control by assigning appropriate operands. The control for each disconnect switch can be programmed to have Bypass Remote Block Open and Bypass Remote Block Close inputs. These inputs can be programmed if temporary permission for open or close is required.

> *Note:*
> *The switch **Remote Block Open**, **Remote Block Close**, **Bypass Remote Block Open** and **Bypass Remote Block Close** flags are inhibited, when the setpoint **Select Before Operate** residing under Local Control Mode menu is disabled. The remote open and close commands are still operational.*

Path: ***Setpoints*** > ***Control*** > ***Switch Control*** > ***SW 1(X) Control***

REMOTE OPEN

Range: Off, Any FlexLogic operand

Default: Off

This setting specifies an input which when asserted initiates the open command to the switch. This setpoint is active only when the operand assigned for Local Mode is de-asserted, or Local Mode is set to “Off”.

REMOTE CLOSE

Range: Off, Any FlexLogic operand

Default: Off

This setting specifies an input which when asserted initiates the close command to the switch. This setpoint is active only when the operand assigned for Local Mode is de-asserted, or Local Mode is set to “Off”.

OPEN SEAL-IN

Range: 0.000 to 6000.000 s in steps of 0.001 s

Default: 0.000 s

This setting specifies the seal-in time of the open commands due to an operator initiated manual or remote open command to the disconnect switch.

CLOSE SEAL-IN

Range: 0.000 to 6000.000 s in steps of 0.001 s

Default: 0.000 s

This setting specifies the seal-in time of the open commands due to an operator initiated manual or remote close command to the disconnect switch.

Note:
To maintain the close/open command for a certain time, do so by either using the seal-in timers Open Seal-In and Close Seal-In, or the setpoint "Seal-in" from the output relays, or FlexLogic.

REMOTE BLOCK OPEN

Range: Off, Any FlexLogic operand

Default: Off

The assertion of the operand assigned to this setpoint prevents the disconnect switch from opening.

REMOTE BLOCK CLOSE

Range: Off, Any FlexLogic operand

Default: Off

The assertion of the operand assigned to this setpoint prevents the disconnect switch from closing.

BYPASS REM BLK OPEN

Range: Off, Any FlexLogic operand

Default: Off

This setting specifies the selection of an input which when asserted bypasses the block to the disconnect open control. The Open command is permitted.

BYPASS REM BLK CLOSE

Range: Off, Any FlexLogic operand

Default: Off

This setting specifies the selection of an input which when asserted bypasses the block to the disconnect close control. The Close command is permitted.

EVENTS

Range: Disabled, Enabled

Default: Enabled

TARGETS

Range: Disabled, Self-reset, Latched

Default: Self-reset

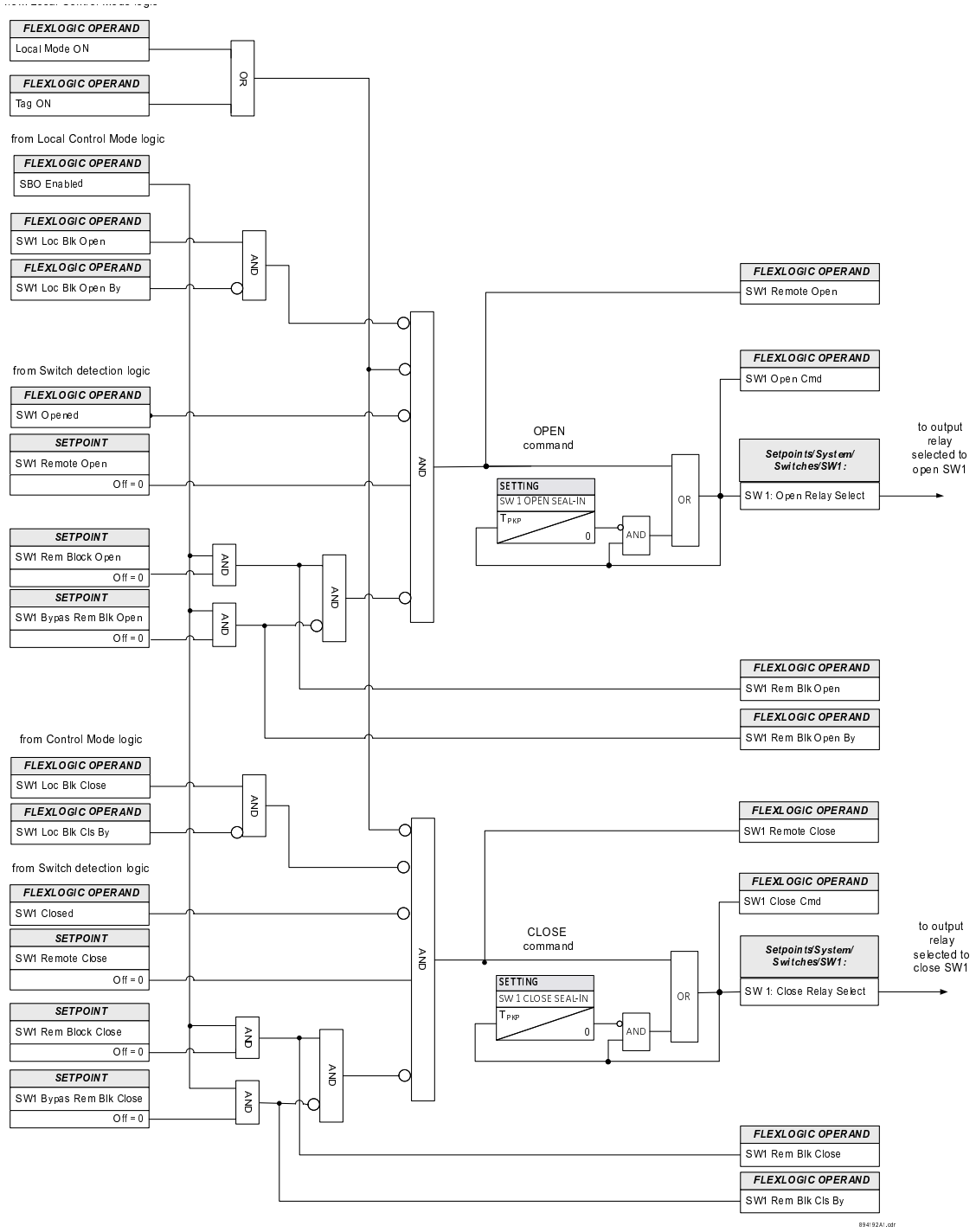

* The logic shows the remote control logic for SW 1. The same logic applies to each switch by programming its individual setpoints for remote control.

Figure 211: Switch Control logic diagram

10.8 VIRTUAL INPUT CONTROL

Path: ***Setpoints*** > ***Control*** > ***Virtual Input Control***

FORCE VIRTUAL INPUT 1 (64)

Range: Off, On

Default: Off

The states of up to 64 Virtual Inputs are changed here. The current or selected status of the Virtual Input is also shown here. The status is a state OFF (logic 0) or ON (logic 1). If the corresponding Virtual Input selected under Setpoints/Inputs/Virtual Inputs is set to `Latched`, the ON command initiated from this menu stays on and the status of this Virtual Input is also on until the OFF command is received. If the Virtual Input type is `Self-Reset`, the command and status of this Virtual Input reverts to OFF after one evaluation of the FlexLogic equations.

10.9 TRIP BUS

Note:
Output Relays configured for Recloser operation are under the Trip Close Logic. Setpoints under Trip Bus are not applicable to the output relays set under Trip Close Logic.

The relay provides six identical Trip Bus elements. The Trip Bus element allows aggregating outputs of protection, control elements, inputs without using FlexLogic and assigning them in a simple and effective manner. Each Trip Bus can be assigned to trip, alarm or the other logic actions. Simple trip conditioning such as latch, delay, and seal-in delay are available.

Path: ***Setpoints*** > ***Control*** > ***Trip Bus 1(X)***

FUNCTION

Range: Disabled, Trip, Alarm, Latched Alarm, Configurable

Note: Relays with firmware version 4 and later have a `Latched Trip` *option*

Default: Disabled

INPUT 1 to 16

Range: Off, Any FlexLogic operand

Default: Off

These settings select a FlexLogic operand to be assigned as an input to the Trip Bus.

LATCHING

Range: Enabled, Disabled

Default: Disabled

The setting enables or disables latching of the Trip Bus output. This is typically used when lockout is required or user acknowledgement of the relay response is required.

RESET

Range: Off, Any FlexLogic operand

Default: Off

The trip bus output is reset when the operand assigned to this setting is asserted.

PICKUP DELAY

Range: 0.000 to 6000.000 s in steps of 0.001 s

Default: 0.000 s

DROPOUT DELAY

Range: 0.000 to 6000.000 s in steps of 0.001 s

Default: 0.000 s

OUTPUT RELAY X

Range: Operate, Do Not Operate

Default: Do Not Operate

BLOCK

Range: Off, Any FlexLogic operand

Default: Off

EVENTS

Range: Enabled, Disabled

Default: Enabled

TARGETS

Range: Self-reset, Latched, Disabled

Default: Self-reset

> *Note:*
> *The Any Trip operand must not be programmed as an input for the Trip Bus function.*

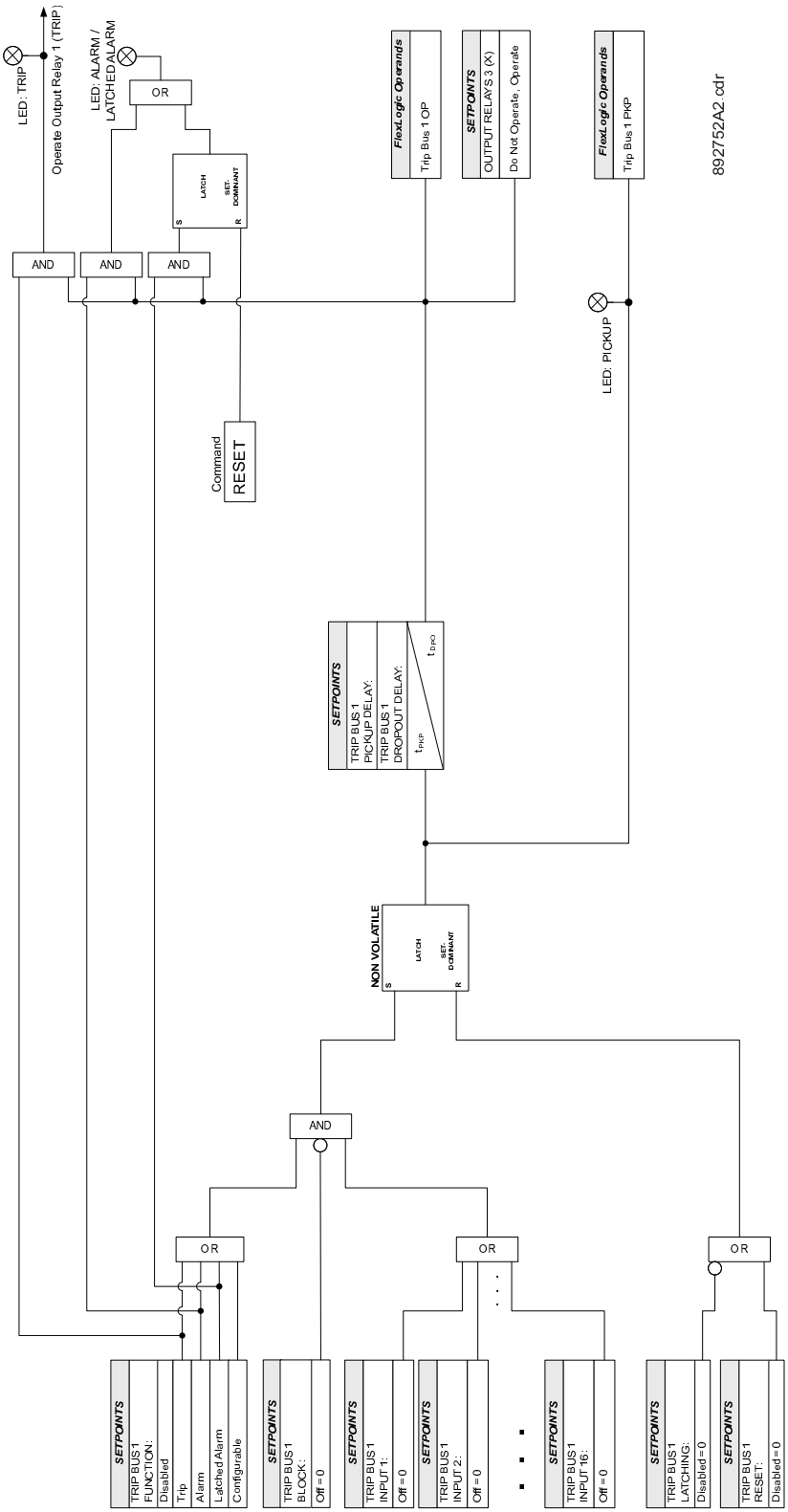

Figure 212: Trip Bus logic diagram

10.10 BREAKER FAILURE (50BF)

The Breaker Failure element determines that a breaker signaled to Trip has not cleared a fault within a definite time. The Breaker Failure scheme must trip all breakers that can supply current to the faulted zone. Operation of a breaker Failure element causes clearing of a larger section of the power system than the initial Trip. Because Breaker Failure can result in tripping a large number of breakers and this can affect system safety and stability, a very high level of security is required.

The Breaker Failure function monitors phase and neutral currents and/or status of the breaker while the protection trip or external initiation command exists. If Breaker Failure is declared, the function operates the selected output relays, forces the autoreclose scheme to lockout and raises FlexLogic operands.

The operation of a Breaker Failure element consists of three stages: initiation, determination of a Breaker Failure condition, and outputs.

Initiation of a Breaker Failure

The protection signals initially sent to the breaker or external initiation (FlexLogic operand that initiates Breaker Failure) initiates the Breaker Failure scheme. The initiating signal should be sealed-in if primary fault detection can reset before the breaker failure timers have finished timing. The seal-in is supervised by current level, so it is reset when the fault is cleared. If required, an incomplete sequence seal-in reset can be implemented by using the initiating operand to initiate a FlexLogic timer, set longer than any breaker failure time, with the output operand selected to block the breaker failure scheme.

When the scheme is initiated, it sends a Trip signal after a pick-up delay, to the breaker initially signaled to Trip (this feature is usually described as re-trip). This reduces the possibility of widespread tripping that can result from a declaration of a failed breaker.

Determination of a Breaker Failure condition

The schemes determine a Breaker Failure condition supervised by one of the following:

- Current supervision only
- Breaker status only
- Both (current and breaker status)

Each type of supervision is equipped with a time delay, after which a failed breaker is declared and Trip signals are sent to all breakers required to clear the zone. The delays are associated with breaker failure timers 1, 2, and 3.

Timer 1 logic is supervised by current level only. If fault current is detected after the delay interval, an output is issued. The continued presence of current indicates that the breaker has failed to interrupt the circuit. This logic detects a breaker that opens mechanically but fails to interrupt fault current.

Timer 2 logic is supervised by both current supervision and breaker status. If the breaker is still closed (as indicated by the auxiliary contact) and fault current is detected after the delay interval, an output is issued.

Timer 3 logic is supervised by a breaker auxiliary contact only. There is no current level check in this logic as it is intended to detect low magnitude faults. External logic may be created to include control switch contact used to indicate that the breaker is in out-of-service mode, disabling this logic when the breaker is out-of-service for maintenance.

Timer 1 and 2 logic provide two levels of current supervision - high-set and low-set - that allow the supervision level to change (for example: from a current which flows before a breaker inserts an opening resistor into the faulted circuit to a lower level after resistor insertion). The high-set detector is enabled after the timeout of timer 1 or 2, along with a timer low-set delay that enables the low-set detector after its delay interval. The delay interval between high-set and low-set is the expected breaker opening time. Both current detectors provide a fast operating time for currents at small multiples of the Pickup value. The overcurrent detectors are required to operate after the Breaker Failure delay interval to eliminate the need for very fast resetting overcurrent detectors.

Outputs

The outputs from the schemes are:

- Re-trip of the protected breaker
- FlexLogic operand that reports on the operation of the portion of the scheme where high-set or low-set current supervision is used
- FlexLogic operand that reports on the operation of the portion of the scheme where 52b status supervision is used only
- FlexLogic operand that initiates tripping required to clear the faulted zone. The Breaker Failure output can be sealed-in for an adjustable period
- Target message indicating a failed breaker has been declared.

10.10.1 BREAKER FAILURE SETUP

Path: ***Setpoints*** > ***Control*** > ***Breaker Failure*** > ***BF1(X)*** > ***BF1(X) Setup***

FUNCTION

Range (3.xx): Disabled, Retrip, Alarm, Latched Alarm, Configurable

Range (4.10): Disabled, Retrip, Latched Retrip, Alarm, Latched Alarm, Configurable

Default: Disabled

When a `Retrip` function is selected and Breaker Failure is initiated (with re-trip current supervision), the output relay Trip operates but the alarm LED does not turn on.

SIGNAL INPUT

Range: dependent upon the order code

Default: CT Bank 1-J1

USE SEAL-IN

Range: Yes, No

Default: Yes

If set to `Yes`, the element will only be initiated if current flowing through the breaker is above the supervision pickup level.

PH RETRIP SUPERV PICKUP

Range: 0.050 to 30.000 x CT in steps of 0.001 x CT

Default: 1.000 x CT

The setpoint specifies the phase current Retrip level, which when exceeded after Breaker Failure initiation, will re-trip its own breaker. The setting is set to detect the lowest expected fault current on the protected circuit.

NTRL RETRIP SUPERV PICKUP

Range: 0.050 to 30.000 x CT in steps of 0.001 x CT

Default: 1.000 x CT

This setpoint specifies the neutral current Retrip level, which when exceeded after Breaker Failure initiation, will Retrip its own breaker. The setting detects the lowest expected fault current on the protected circuit. Neutral Retrip current supervision is used to provide increased sensitivity.

RETRIP PICKUP DELAY

Range: 00.000 to 6000.000 s in steps of 0.001 s

Default: 0.033 s

This setting specifies a pickup delay for the re-trip command. This delay should be set longer than the possible spurious contact input activation duration due to transients or temporary dc grounds by taking the contact input de-bounce time into account. This will avoid re-trip operation for such transients.

SUPERVISION

Range: Current, 52b & Current, 52b

Default: Current

The setpoint specifies the type of supervision of the Breaker Failure element. There are three options: current only, breaker status only, or both.

BREAKER CLOSED

Range: Off, Any FlexLogic operand

Default: Off

The setpoint selects the FlexLogic operand (auxiliary switch contact) to indicate that the circuit breaker is closed.

T1 PICKUP DELAY

Range: 0.000 to 6000.000 s in steps of 0.001 s

Default: 0.120 s

The setting provides a delay for Timer 1 logic which is supervised with current supervision only. The timer is set to the expected opening time of the circuit breaker, plus a safety margin intended to overcome the relay measurement and timing errors as well as relay processing time and current supervision reset time. In a microprocessor relay this time is not significant. The current magnitude ramps-down to zero in ¾ of a power cycle after the current is interrupted.

> *Note:*
> *In bulk oil circuit breakers, the interrupting time for currents less than 25% of the interrupting rating can be significantly longer than the normal interrupting time.*

T2 PICKUP DELAY

Range: 0.000 to 6000.000 s in steps of 0.001 s

Default: 0.120 s

The setting provides a delay for Timer 2 logic which is supervised with current supervision and breaker status (52b indication). The timer is set to the expected opening time of the circuit breaker, plus a safety margin intended to overcome the relay measurement and timing errors, relay processing time, current supervision reset time, and the time required for the breaker auxiliary contact to open.

T3 PICKUP DELAY

Range: 0.000 to 6000.000 s in steps of 0.001 s

Default: 0.120 s

The setting provides a delay for Timer 3 logic which is supervised with breaker status only (52b indication). The timer is set to the expected opening time of the circuit breaker, plus a safety margin intended to overcome the relay timing errors, and the time required for the breaker auxiliary contact to open.

PHASE HIGHSET PICKUP

Range: 0.050 to 30.000 x CT in steps of 0.001 x CT

Default: 1.000 x CT

The setpoint specifies the phase current output supervision level. The setting detects the lowest expected fault current on the protected circuit.

NEUTRAL HIGHSET PICKUP

Range: 0.050 to 30.000 x CT in steps of 0.001 x CT

Default: 1.000 x CT

The setpoint specifies the neutral current output supervision level. The setting detects the lowest expected fault current on the protected circuit. Neutral current supervision is used to provide increased sensitivity.

LOWSET DELAY

Range: 0.000 to 6000.000 s in steps of 0.001 s

Default: 0.000 s

The setting provides the lowest current supervision Pickup. The setting is used in applications where a change in supervision current level is required (for example: breakers with opening resistors).

The lowest delay (interval between high-set and low-set) is the expected breaker opening time.

PHASE LOWSET PICKUP

Range: 0.050 to 30.000 x CT in steps of 0.001 x CT

Default: 1.000 x CT

The setpoint specifies the phase current output supervision level. The setting detects the lowest expected fault current on the protected circuit where significant change in current level is expected (for example: breakers with opening resistors).

NEUTRAL LOWSET PICKUP

Range: 0.050 to 30.000 x CT in steps of 0.001 x CT

Default: 1.000 x CT

The setpoint specifies the neutral current output supervision level. The setting detects the lowest expected fault current on the protected circuit where significant change in current level is expected (for example: breakers with opening resistors). Neutral current supervision is used to provide increased sensitivity.

DROPOUT DELAY

Range: 0.000 to 6000.000 s in steps of 0.001 s

Default: 0.100 s

The setting is used to set the period of time for which the Breaker Fail output is sealed-in. This timer must be coordinated with the automatic reclosing scheme of the failed breaker, to which the Breaker Failure element sends a cancel reclosure signal. Reclosure of a remote breaker can also be prevented by holding a transfer Trip signal on for longer than the reclaim time.

BLOCK

Range: Off, Any FlexLogic operand

Default: Off

OUTPUT RELAY X

Range: Operate, Do Not Operate

Default: Do Not Operate

EVENTS

Range: Disabled, Enabled

Default: Enabled

TARGETS

Range: Disabled, Self-reset, Latched

Default: Self-reset

10.10.2 INITIATE

Path: ***Setpoints*** > ***Control*** > ***Breaker Failure 1(X)*** > ***BF1(X) Initiate***

EXTERNAL INITIATE

Range: Off, Any FlexLogic operand

Default: Off

The setpoint selects the FlexLogic operand that initiates the Breaker Failure scheme; typically the trip signals from external devices.

> *Note:*
> *The trip signals from internal protection functions may be used with the help of FlexLogic, but for easier setting the Breaker Failure function is provided with a BF1 INITIATE submenu.*

INITIATE IN1(15)

Range: Off, Any FlexLogic operand

Default: Ph TOC 1 OP

The setpoint selects the FlexLogic operand that initiates the Breaker Failure scheme; typically the trip signals from internal protection functions.

> *Note:*
> *The default setting includes the following protection functions:*

- Ph TOC 1 OP
- Ph TOC 2 OP
- Ph IOC 1 OP
- Ph IOC 2 OP
- Ntrl TOC 1 OP
- Ntrl TOC 2 OP
- Ntrl IOC 1 OP
- Ntrl IOC 2 OP
- GND TOC 1 OP
- GND IOC 1 OP

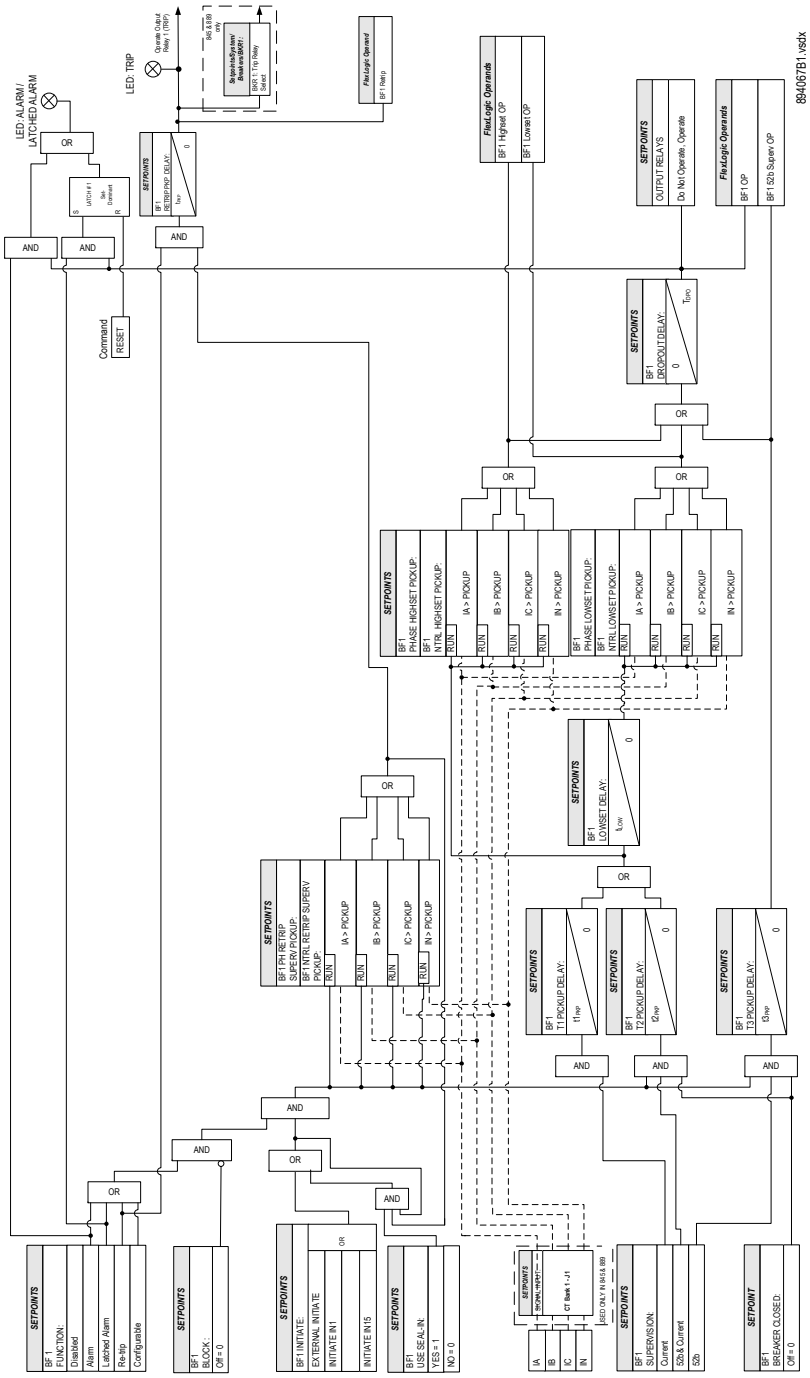

Figure 213: Breaker Failure logic diagram

10.11 ARC FLASH PROTECTION

The Arc Flash Protection module supports fast and secure protection against an arc flash event for a safe working environment.

Arc Flash protection uses four light detection fiber sensors and a dedicated high-speed instantaneous overcurrent element with secure Finite Response Filtering. Light from the light sensor AND logic with high-speed overcurrent ensures fast and secure operation. Further enhancement includes continuous monitoring of individual light sensors with self-test trouble indication. Four Arc Flash elements with self-test from the individual light sensors can be used to design flexible Arc Flash protection schemes for different configurations depending upon the physical locations of the sensors. Each individual element can also provide a higher level of redundancy/reliability of the system.

In case any issues with the sensors are detected (i.e. failure of a self-test), the corresponding light sensor trouble operand (Light Sensor # Trouble) is asserted. Very fast detection of the Arc flash light event is also possible using Light as the only detection parameter for alarm purposes. In addition, customized logic can be designed using individual AF1 Light # PKP and Arc Flash 1 S# OP operands from different light sensors in the FlexLogic engine.

Path:***Setpoints*** > ***Control*** > ***Arc Flash*** > ***Arc Flash 1***

FUNCTION

Range: Disabled, Trip, Alarm, Latched Alarm, Configurable

Note: Relays with firmware version 4 and later have a `Latched Trip` *option*

Default: Disabled

The selection of Trip, Alarm, Latched Alarm or Configurable setting enables the HS Phase/Ground IOC function.

SIGNAL INPUT

Range: dependent upon the order code

Default: CT Bank 1 - J1

This setting provides the selections for the current input bank. The default bank names can be changed in: ***Setpoints*** > ***System*** > ***Current Sensing*** > ***[Name]*** > ***CT Bank Name***.

HS PHASE PKP

Range: 0.050 to 30.000 x CT in steps of 0.001 x CT

Default: 2.000 x CT

HS GROUND PKP

Range: 0.050 to 30.000 x CT in steps of 0.001 x CT

Default: 1.000 x CT

> *Note:*
> *The value of HS Gnd PICKUP can be set to a very high value, when only the HS Phs element needs to be applied for Arc Flash detection.*

> *Note:*
> *The HS Ground PKP setting is not available if the order code is selected to have just one sensitive ground current input on the J1-Bank (4-0B in the order code).*

LIGHT SENSOR 1(4)

Range: Disabled, Enabled

Default: Disabled

OUTPUT RELAY X

Range: Operate, Do Not Operate

Default: Do Not Operate

BLOCK

Range: Off, Any FlexLogic operand

Default: Off

EVENTS

Range: Disabled, Enabled

Default: Enabled

This setting enables or disables the events of the Arc Flash function.

TARGETS

Range: Self-reset, Latched, Disabled

Default: Latched

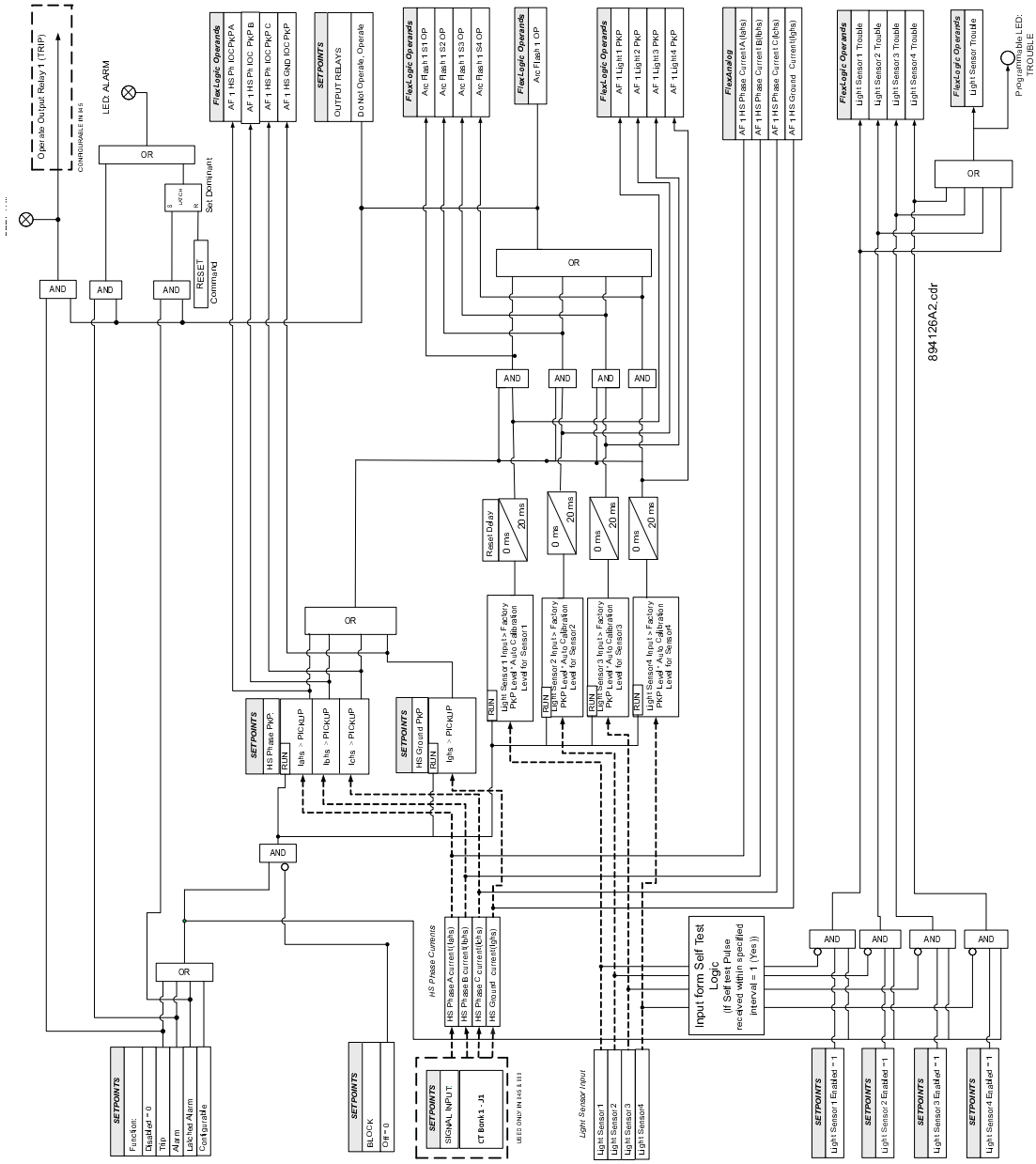

Figure 214: Arc Flash logic diagram

10.12 SYNCHROCHECK (25)

The synchronism check (Synchrocheck) function is intended for supervising the paralleling of two parts of a system which are to be joined by the closure of a circuit breaker. The Synchrocheck elements are typically used at locations where the two parts of the system are interconnected.

If a breaker can be a paralleling point between two generation sources, it is common practice to automatically perform a check to ensure the sources are within allowable voltage limits before permitting closing of the breaker. Synchrocheck provides this feature by checking that the bus and line input voltages are within the programmed differentials of voltage magnitude, phase angle position, and frequency. If this feature is enabled, the check will be performed before either manual close or automatic reclose signals can operate the Close Output Relay. The Synchrocheck programming can allow permitted closing if either or both of the sources are de-energized.

Synchrocheck verifies that the voltages (BUS and LINE) on the two sides of the supervised circuit breaker are within set limits of magnitude, angle and frequency difference. The time during which the two voltages remain within the admissible angle difference is determined by the setting of the phase angle difference ΔΦ (without angle compensation) and the frequency difference ΔF (slip frequency). It can be defined as the time it would take the voltage phasor, BUS or LINE, to traverse an angle equal to 2 × ΔΦ at a frequency equal to the frequency difference ΔF. This time can be calculated by:

$$T = \frac{1}{\frac{360°}{2 \times \Delta\Phi} \times \Delta F}$$

where:

- ΔΦ = phase angle difference in degrees
- ΔF = frequency difference in Hz.

Example: For the values ofΔΦ = 30° and ΔF = 0.1 Hz, the time during which the angle between the two voltages is less than the set value is:

$$T = \frac{1}{\frac{360}{2 \times 30} \times 0.1} = 1.66\,\text{sec}$$

As a result the breaker closing time must be less than this computed time, to successfully close and connect both energized sides.

If one or both sides of the synchronizing breaker are de-energized, the Synchrocheck programming can allow for closing of the circuit breaker using undervoltage control to by-pass the Synchrocheck measurements (dead source function).

The measured bus and line input voltage magnitudes, angles and frequencies, and calculated differential values of angle magnitude and frequency are available as actual values under ***Metering*** > ***Synchrocheck 1***.

The selection of `Aux VT Connection` under ***Setpoints*** > ***System*** > ***Voltage Sensing*** determines the voltage used for Synchrocheck as derived from the three-phase voltages available on the relay. For example, if the Aux VT Connection is selected as Vab, and the three-phase VTs are connected in Wye configuration, the relay computes delta voltage Vab as well, and uses it for Synchrocheck.

> *Note:*
> *The Synchrocheck cannot be performed if the three-phase VTs are Delta connected, and the Wye single voltage input is selected under **Aux VT connection**. Wye voltages cannot be calculated from Delta connected VTs.*

Note:
If both Line and Bus sides are three-phase VTs, the VT types must match, i.e. either both Line and Bus Volt inputs are Delta or both are Wye. If both sides are single-phase Aux VT inputs, then both Aux VT connection types must match, i.e. if the Line side Aux VT type is Vab, then the Bus side Aux VT type must be Vab. Aux VT connection Vn is not a valid type for synchrocheck.

Caution:
If the VT types on the Line and Bus side do not match, as specified above, the Synchrocheck does not run even when the Function is set to Enabled.

Note:
*Once the Synchrocheck function is programmed, it will perform a voltage input selection check, to determine that the voltage magnitudes are not different by more than 5%. This check depends only on the settings entered for phase and auxiliary VTs under **Setpoints** > **System** > **Voltage Sensing**. If the difference between the selected voltage inputs by calculation is bigger than 5%, the Synchrocheck will not work. For example, the phase VT can be set to Wye connection with secondary voltage of 66.4V. The Aux. VT can be connected between phase A to B with the secondary voltage set to 115V. Then, one of the Synchrocheck inputs can be set as the Wye connected phase voltage bank, and the other input can be the Aux. VT with voltage V_{ab}. Since the difference between the computed V_{ab} input and the Aux. VT setting is 0%, the Synchrocheck will work. However, if this difference is bigger than 5%, the Synchrocheck will not work.*

Path: ***Setpoints*** > ***Control*** > ***Synchrocheck 1(X)***

FUNCTION

Range: Disabled, Enabled

Default: Disabled

BUS VOLTS INPUT

Range: dependent upon the order code

Default: J2-3VT

The setting provides selection of the Bus Volts input; either three-phase voltages from the three-phase VTs connected to the relay, or a single voltage from the Auxiliary VT also connected to the relay Aux VT input. The setup of these VTs is outlined under ***Setpoints*** > ***System*** > ***Voltage Sensing***.

LINE VOLTS INPUT

Range: dependent upon the order code

Default: J2-Vx

The setting provides selection of the Line Volts input; either three-phase voltages from the three-phase VTs connected to the relay, or a single voltage from the Auxiliary VT also connected to the relay Aux VT input. The setup of these VTs is outlined under ***Setpoints*** > ***System*** > ***Voltage Sensing***.

MAX FREQ DIFFERENCE

Range: 0.01 to 5.00 Hz in steps of 0.01 Hz

Default: 0.20 Hz

The setting selects the maximum frequency difference in ‘Hz’ between the two sources. A frequency difference between the two input voltage systems below this value is within the permissible limit for synchronism.

MAX ANGLE DIFFERENCE

Range: 1 to 100° in steps of 1°

Default: 20°

The setpoint selects the maximum angular difference in degrees between the two sources. An angular difference between the two input voltage phasors below this value is within the permissible limit for synchronism.

MAX VOLT DIFFERENCE

Range: 10 to 600000 V in steps of 1 V

Default: 2000 V

The setpoint selects the maximum primary voltage difference in volts between the two sources. A primary voltage magnitude difference between the two input voltages below this value is within the permissible limit for synchronism.

MAX FREQ HYSTERESIS

Range: 0.01 to 0.10 Hz in steps of 0.01 Hz

Default: 0.05 Hz

The setpoint specifies the required hysteresis for the maximum frequency difference condition. The condition becomes satisfied when the frequency difference becomes lower than SYNC1 MAX FREQ DIFFERENCE. Once the Synchrocheck element has operated, the frequency difference must increase above the SYNC1 MAX FREQ DIFFERENCE + SYNC1 MAX FREQ HYSTERESIS sum to drop out (assuming the other two conditions, voltage and angle, remain satisfied).

DEAD SOURCE PERM

Range: Disabled, LB & DL, DB & LL, DB & DL, DB OR DL, DB XOR DL

Default: Disabled

The setpoint selects the combination of dead and live sources that bypass the synchronism check function and permit the breaker to be closed when one or both of the two voltages (Bus Voltage or/and Line Voltage) are below the maximum voltage threshold. A dead or live source is declared by monitoring the voltage level. Six options are available.

The voltage levels that determine whether a source is dead or live are configurable in the four setpoints following this one.

The DEAD SOURCE PERMISSION range is as follows:

- `Disabled`: Dead source permissive is disabled.
- `LB & DL`: Live Bus AND Dead Line.“DB & LL”: Dead Bus AND Live Line.
- `DB & DL`: Dead Bus AND Dead Line.
- `DB OR DL`: Dead Bus OR Dead Line.
- `DB XOR DL`: Dead Bus XOR Dead Line (one source is Dead and one is Live).

> *Note:*
> *For an application where the breaker is located on radial feeders, or line is powered by one source only, the DEAD SOURCE PERM setpoint shall not be disabled.*

LIVE BUS VOLTS MIN

Range: 0.00 to 1.50 x VT in steps of 0.01 x VT

Default: 0.80 x VT

The setpoint establishes a minimum voltage magnitude for the Bus Voltage. Above this magnitude, the Bus Voltage input used for Synchrocheck is considered “Live” or energized.

LIVE LINE VOLTS MIN

Range: 0.00 to 1.50 x VT in steps of 0.01 x VT

Default: 0.80 x VT

The setpoint establishes a minimum voltage magnitude for the Line Voltage. Above this magnitude, the Line Voltage input used for Synchrocheck is considered “Live” or energized.

DEAD BUS VOLTS MAX

Range: 0.00 to 1.50 x VT in steps of 0.01 x VT

Default: 0.20 x VT

The setpoint establishes a maximum voltage magnitude for the Bus Voltage. Below this magnitude, the Bus Voltage input used for Synchrocheck is considered “Dead” or de-energized.

DEAD LINE VOLTS MAX

Range: 0.00 to 1.50 x VT in steps of 0.01 x VT

Default: 0.20 x VT

This setpoint establishes a maximum voltage magnitude for the Line Voltage. Below this magnitude, the Line Voltage input used for Synchrocheck is be considered “Dead” or de-energized.

SYNCCHECK BYPASS

Range: Off, Any FlexLogic operand

Default: Off

The Synchrocheck is bypassed when the selected operand is asserted. Typically BKR(X) Disconnected is used to bypass Synchrocheck.

BLOCK

Range: Off, Any FlexLogic operand

Default: Off

The Synchrocheck is blocked when the selected operand is asserted. Typically 52a (the circuit breaker closed) contact is used to block Synchrocheck (Synchrocheck is needed only when the circuit breaker is open). Synchrocheck can be also blocked when the relay is tripping.

OUTPUT RELAY X

Range: Operate, Do Not Operate

Default: Do Not Operate

EVENTS

Range: Enabled, Disabled

Default: Enabled

TARGETS

Range: Disabled, Self-reset, Latched

Default: Self-reset

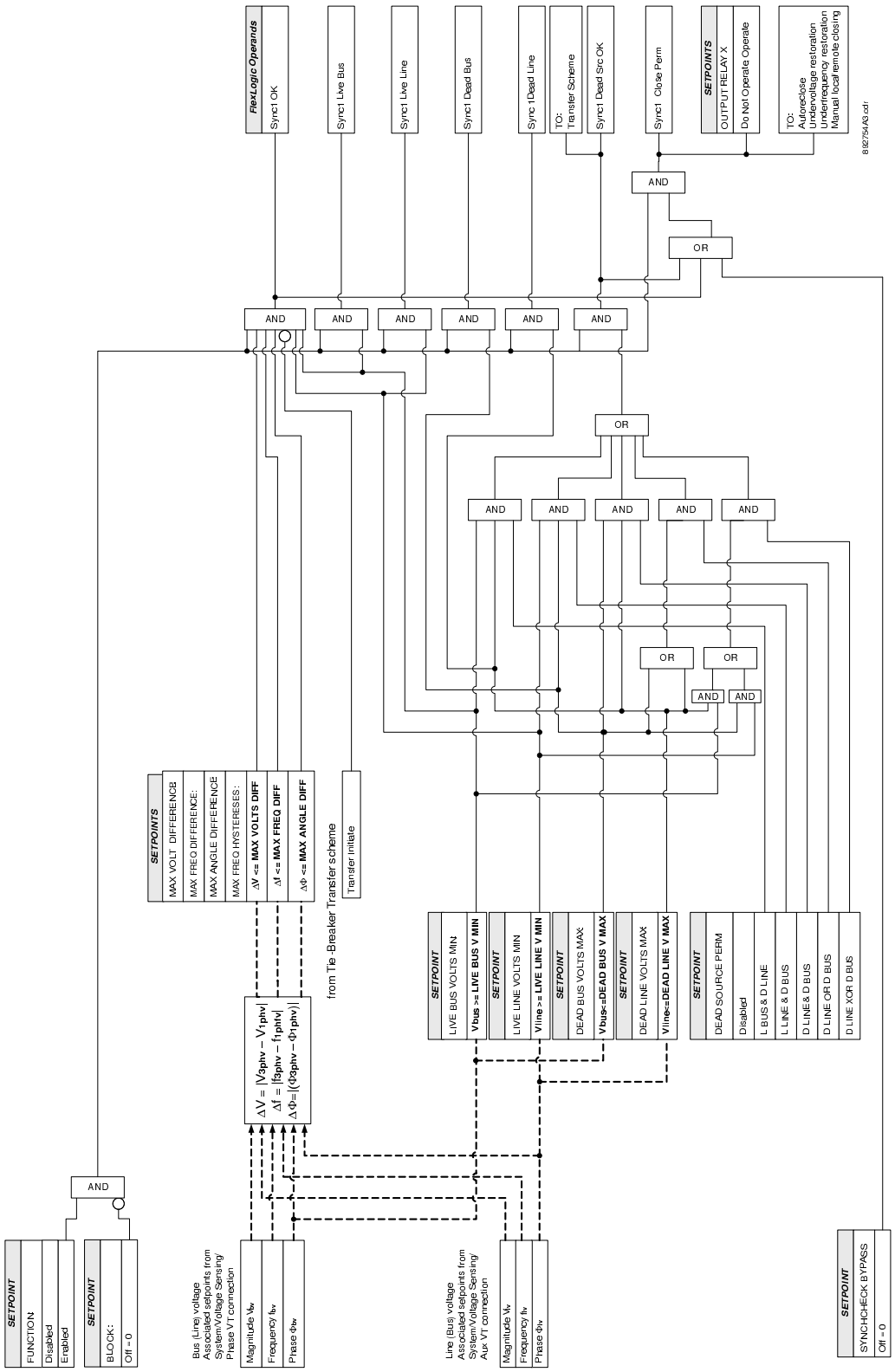

Figure 215: Synchrocheck logic diagram

10.13 VT FUSE FAILURE (VTFF)

The VT Fuse Failure detector can be used to raise an alarm and/or block elements that may operate incorrectly for a full or partial loss of AC potential caused by one or more blown fuses. Some elements that might be blocked (via the BLOCK input) are voltage restrained overcurrent, directional current, power functions. This loss can be caused by a blown primary voltage transformer fuse (or fuses), or by voltage transformer secondary circuit protection fuse failure.

There are two classes of fuse failure that may occur:

1. Class A: loss of one or two phases
2. Class B: loss of all three phases.

Different means of detection are required for each class. An indication of a Class A failure is a significant level of negative sequence voltage, whereas an indication of a Class B failure is the presence of positive sequence current and an insignificant amount of positive sequence voltage. These noted indications of fuse failure could also be present when faults are present on the system, so a means of detecting faults and inhibiting fuse failure declarations during these events is provided.

Once the fuse failure condition is declared, it is sealed-in until the cause that generated it disappears. An additional condition is introduced to inhibit a fuse failure declaration when the monitored circuit is de-energized: positive sequence voltage and current are both below threshold levels.

The settings of this function are applied to three-phase voltage input (supervised with positive, negative and zero sequence current components) to produce an Operate flag.

10.13.1 VT FUSE FAILURE SETTINGS

Path: ***Setpoints*** > ***Control*** > ***VT Fuse Failure 1 (2)***

FUNCTION

Range: Disabled, Alarm, Latched Alarm, Configurable

Default: Disabled

VT INPUT

Range: Dependent upon the order code

Default: Ph VT Bnk1-J2

CT INPUT

Range: Dependent upon the order code

Default: CT Bnk1-J1

TIME DELAY

Range: 0 to 60000 s in steps of 0.1 s

Default: 0.1 s

This setting can be used to avoid fuse failure detection in the case of sudden loss of voltage when the current is zero (breaker remains in open condition) and the transient negative sequence voltage appears. This setting should be used where the VT is on the Bus side, in which case the relay may detect voltage loss when the breaker is open.

OUTPUT RELAY X

Range: Operate, Do Not Operate

Default: Do Not Operate

EVENTS

Range: Enabled, Disabled

Default: Enabled

TARGETS

Range: Disabled, Self-reset, Latched

Default: Self-reset

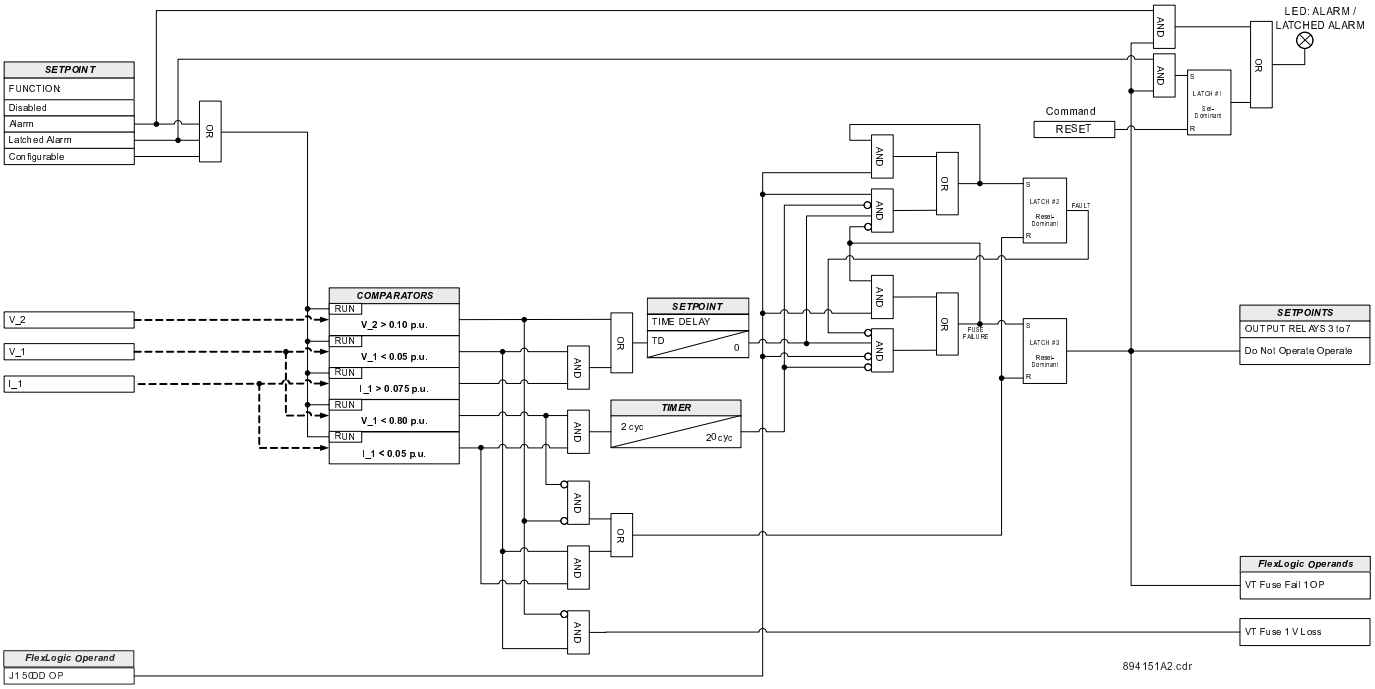

Figure 216:

Figure 217: VT Fuse Failure logic diagram

CHAPTER 11

FLEXLOGIC

11.1 CHAPTER OVERVIEW

This chapter describes the FlexLogic and Testing setpoints. FlexLogic setpoints provide access to the variable logic used with the relay. Testing setpoints include simulated current and voltage inputs, and test operations for LEDs, input contacts, and output relays.

This product manual does not contain a list of FlexLogic operands. A full list is available on the GE website.

This chapter contains the following sections:

Chapter Overview 526

FlexLogic 527

11.2 FLEXLOGIC

To provide maximum flexibility, the arrangement of internal digital logic combines fixed and user-programmed parameters. Logic upon which individual features are designed is fixed, and all other logic, from digital input signals through elements or combinations of elements to digital outputs, is variable. The user has complete control of all variable logic through FlexLogic. In general, the system receives analog and digital inputs, which then uses FlexLogic to produce analog and digital outputs.

The major sub-systems of a generic 8 Series relay involved in this process are shown as follows.

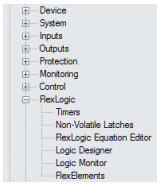

> *Note:*
> *For information on the Logic Designer and Logic Monitor menu items, refer to the Help menu.*

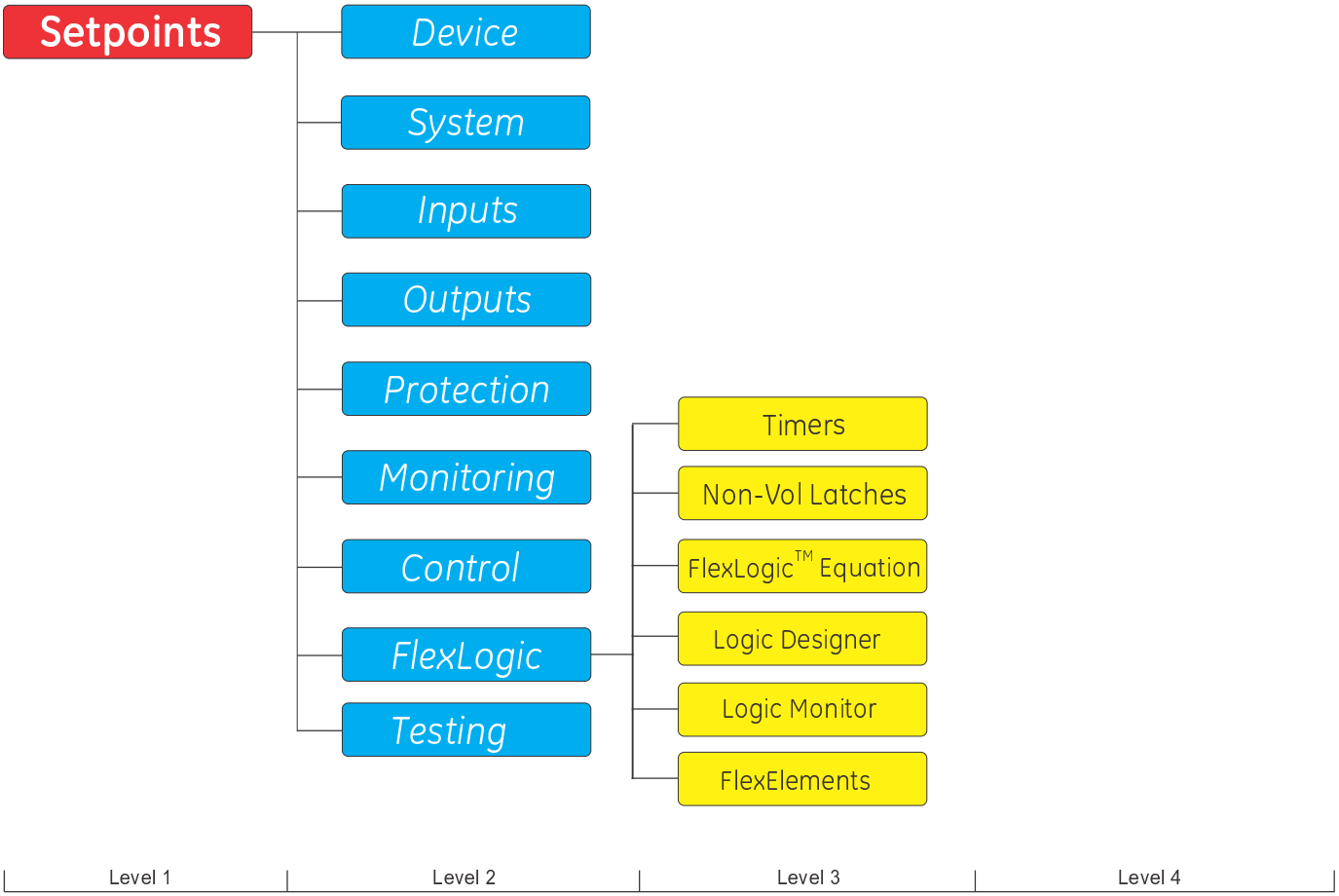

Figure 218: FlexLogic Display Hierarchy

The states of all digital signals are represented by flags (FlexLogic operands). A digital 1 is represented by a *Set* flag. Any external contact change-of-state can be used to block an element from operating, as an input to a control feature in a FlexLogic equation, or to operate an output relay. The state of the contact input can be displayed locally or viewed remotely via the communications facilities provided. In a simple scheme where a contact input is used to

block an element is desired, this selection is made within the menu of the element. This applies to other features that set flags: elements, virtual inputs, remote inputs, schemes, and human operators.

When more complex logic than the one presented above is required, the FlexLogic tool should be used. For example, if it is desired to block the operation of a Phase Time Overcurrent element by the closed state of a contact input, and the operated state of a Phase Undervoltage element, the two input states need be programmed in a FlexLogic equation. This equation ANDs the two inputs to produce a virtual output which then must be programmed within the menu of the Phase Time Overcurrent as a blocking input. Virtual outputs can be created only by FlexLogic equations.

Traditionally, protective relay logic has been relatively limited. Any unusual applications involving interlocks, blocking, or supervisory functions had to be hard-wired using contact inputs and outputs. FlexLogic minimizes the requirement for auxiliary components and wiring while making more complex schemes possible.

The logic that determines the interaction of inputs, elements, schemes and outputs is field programmable through the use of logic equations that are sequentially processed. The use of virtual inputs and outputs in addition to hardware is available internally and on the communication ports for other relays to use (distributed FlexLogic).

FlexLogic allows customization of the relay through a series of equations that consist of operators and operands. The operands are the states of inputs, elements, schemes and outputs. The operators are logic gates, timers and latches (with set and reset inputs). A system of sequential operations allows any combination of specified operands to be assigned, as inputs to specified operators, to create an output. The final output of an equation is a numbered register called a ‘Virtual Output’. Virtual Outputs can be used as an input operand in any equation, including the equation that generates the output, as a seal-in or other type of feedback.

A FlexLogic equation consists of parameters that are either operands or operators. Operands have a logic state of 1 or 0. Operators provide a defined function, such as an AND gate or a Timer. Each equation defines the combinations of parameters to be used to set a Virtual Output flag. Evaluation of an equation results in either a 1 (=ON, i.e. flag set) or 0 (=OFF, i.e. flag not set). Each equation is evaluated at least 4 times during every power system cycle.

Some types of operands are present in the relay in multiple instances; e.g. contact and remote inputs. These types of operands are grouped together (for presentation purposes only) on the faceplate display. The characteristics of the different types of operands are listed in the table below.

FlexLogic Operands

A complete list of FlexLogic operands are available on the GE website.

The following operands can be re-named if required

- Breakers in the breaker control feature
- ID (identification) of contact inputs
- ID of virtual inputs
- ID of virtual outputs.
- If the default name or ID of any of these operands are changed, the assigned name appears in the relay list of operands.

FlexLogic Operators

TYPE	SYNTAX	DESCRIPTION	NOTES
Editor	INSERT	Insert a parameter in an equation list.	
	DELETE	Delete a parameter from an equation list.	
End	END	The first END encountered signifies the last entry in the list of processed FlexLogic™ parameters.	

TYPE	SYNTAX	DESCRIPTION	NOTES
One-shot	POSITIVE ONE SHOT	One shot that responds to a positive going edge.	A ‘one shot’ refers to a single input gate that generates a pulse response to an edge on the input. The output from a ‘one shot’ is True (positive) for only one pass through the FlexLogic equation. There is a maximum of 64 ‘one shots’.
	NEGATIVE ONE SHOT	One shot that responds to a negative going edge.	
	DUAL ONE SHOT	One shot that responds to both the positive and negative going edges.	
Logic gate	NOT	Logical NOT	Operates on the previous parameter.
	OR(2)↓ OR(16)	2 input OR gate↓ 16 input OR gate	Operates on the 2 previous parameters.↓Operates on the 16 previous parameters.
	AND(2)↓ AND(16)	2 input AND gate↓ 16 input AND gate	Operates on the 2 previous parameters. ↓Operates on the 16 previous parameters.
	NOR(2)↓ NOR(16)	2 input NOR gate↓ 16 input NOR gate	Operates on the 2 previous parameters. ↓Operates on the 16 previous parameters.
	NAND(2)↓ NAND(16)	2 input NAND gate↓ 16 input NAND gate	Operates on the 2 previous parameters. ↓Operates on the 16 previous parameters.
	XOR(2)	2 input Exclusive OR gate	Operates on the 2 previous parameters.
	LATCH (S,R)	Latch (set, reset): reset-dominant	The parameter preceding LATCH(S,R) is the reset input. The parameter preceding the reset input is the set input.
Timer	TIMER 1↓ TIMER 32	Timer set with FlexLogic™ timer 1 settings.↓ Timer set with FlexLogic™ timer 32 settings.	The timer is started by the preceding parameter. The output of the timer is TIMER #.
Assign virtual output	= Virt Op 1↓ = Virt Op 32	Assigns previous FlexLogic™ operand to virtual output 1.↓ Assigns previous FlexLogic™ operand to virtual output 96.	The virtual output is set by the preceding parameter

The characteristics of the logic gates are tabulated below, and the operators available in FlexLogic are listed in the FlexLogic operators table.

FlexLogic Gate Characteristics

GATES	NUMBER OF INPUTS	OUTPUT IS 1 (= ON) IF...
NOT	1	input is ‘0’
OR	2 to 16	any input is ‘1’
AND	2 to 16	all inputs are ‘1’
NOR	2 to 16	all inputs are ‘0’
NAND	2 to 16	any input is ‘0’
XOR	2	only one input is ‘1’

FLEXLOGIC RULES

When forming a FlexLogic equation, the sequence in the linear array of parameters must follow these general rules:

- Operands must precede the operator which uses the operands as inputs.
- Operators have only one output. The output of an operator must be used to create a Virtual Output if it is to be used as an input to two or more operators.
- Assigning the output of an operator to a Virtual Output terminates the equation.
- A timer operator (for example, TIMER 1) or Virtual Output assignment may only be used once. If this rule is broken, a syntax error will be declared.

FLEXLOGIC EVALUATION

- Each equation is evaluated in the order in which the parameters have been entered.
- FlexLogic provides latches which by definition have a memory action, remaining in the set state after the set input has been asserted. However, they are volatile; that is, they reset on the re-application of control power.
- When making changes to settings, all FlexLogic equations are re-compiled whenever any new setting value is entered, so all latches are automatically reset. If it is necessary to re-initialize FlexLogic during testing, for example, it is suggested to power the unit down then back up.

11.2.1 TIMERS

Path: ***Setpoints*** > ***FlexLogic*** > ***Timers***

There are 32 identical FlexLogic timers available. These timers can be used as operators for FlexLogic equations.

TIMER 1 TYPE

Range: Milliseconds, Seconds, Minutes

Default: Milliseconds

The setpoint is used to select the time measuring unit.

TIMER 1 MODE

Range: Pickup, Dropoff, Dwell, Pulse, Pickup/Dropoff,

Default: Pickup

TIMER 1 PICKUP DELAY

Range: 0 to 60000 s in steps of 1 s

Default: 0 s

The setpoint sets the time delay to Pickup. If a Pickup delay is not required, set this function to “0”.

This setting is used to set the time delay for Pickup, Dwell, Pulse and Pickup/Dropoff.

TIMER 1 DROPOUT DELAY

Range: 0 to 60000 s in steps of 1 s

Default: 0 s

The setpoint sets the time delay to Dropout. If a Dropout delay is not required, set this function to “0”.

This setting is used to set the drop-off time delay for Dropoff, Pickup/Dropoff.

11.2.2 NON-VOLATILE LATCHES

The purpose of a Non-volatile Latch is to provide a permanent logical flag that is stored safely and does not reset when the relay reboots after being powered down. Typical applications include sustaining operator commands or permanently blocking relay functions such as Autorecloser, until a deliberate HMI action resets the latch.

Operation of the element is summarized in the following table:

LATCH 1 TYPE	LATCH 1 SET	LATCH 1 RESET	LATCH 1 ON	LATCH 1 OFF
Reset Dominant	On	Off	On	Off
	Off	Off	Previous State	Previous State
	On	On	Off	On
	Off			
Set Dominant	On	Off	On	Off
		On		
	Off	Off	Previous State	Previous State
	Off	On	Off	On

Path: ***Settings*** > ***FlexLogic*** > ***Non-volatile Latches*** > ***Latch 1(16)***

NV LATCH 1 FUNCTION

Range: Disabled, Enabled

Default: Disabled

The setpoint enables or disables the Non-volatile Latch function.

NV LATCH 1 TYPE

Range: Reset-Dominant, Set-Dominant

Default: Reset-Dominant

The setting characterizes NV LATCH 1 to be set- or reset-dominant.

NV LATCH 1 SET

Range: Any FlexLogic operand

Default: Off

If asserted, this specified FlexLogic operand sets NV LATCH 1.

LATCH 1 RESET

Range: Any FlexLogic operand

Default: Off

If asserted, this specified FlexLogic operand resets NV LATCH 1.

11.2.3 FLEXLOGIC EQUATION

Path: ***Setpoints*** > ***FlexLogic*** > ***FlexLogic Equation***

The FlexLogic Equation screen is one of two options available to configure FlexLogic. The other option is Logic Designer.

Three time stamp variables: Logic Design Last Saved, Logic Design Last Compiled and FlexLogic Editor Last Saved, have been included in this screen.

Look at the time stamps to easily see which of the options: FlexLogic Editor or Logic Designer is currently being used.

There are 1024 FlexLogic entries available, numbered from 1 to 1024 (i.e. FlexLogic Entry X – where X ranges from 1 to 1024) with default END entry settings. If a Disabled Element is selected as a FlexLogic entry, the associated state flag is never set to 1.

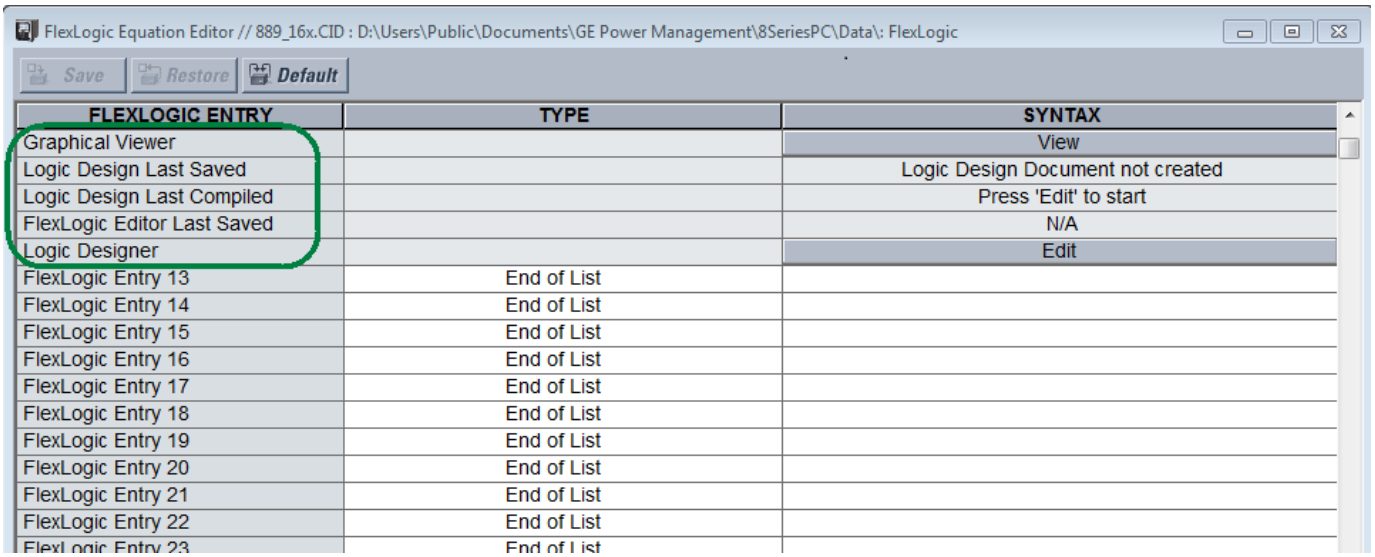

FLEXLOGIC ENTRY	TYPE	SYNTAX
Graphical Viewer		View
Logic Design Last Saved		Logic Design Document not created
Logic Design Last Compiled		Press 'Edit' to start
FlexLogic Editor Last Saved		N/A
Logic Designer		Edit
FlexLogic Entry 13	End of List	
FlexLogic Entry 14	End of List	
FlexLogic Entry 15	End of List	
FlexLogic Entry 16	End of List	
FlexLogic Entry 17	End of List	
FlexLogic Entry 18	End of List	
FlexLogic Entry 19	End of List	
FlexLogic Entry 20	End of List	
FlexLogic Entry 21	End of List	
FlexLogic Entry 22	End of List	
FlexLogic Entry 23	End of List	

Figure 219: FlexLogic Equation Editor Screen

The FlexLogic entries are defined as follows.

Graphical Viewer: Clicking on the View button enables the FlexLogic equation to be presented in graphical format (Read-only). Refer to the *Viewing FlexLogic Graphics* section for more details.

Logic Design Last Saved, Logic Design Last Compiled, and FlexLogic Editor Last Saved: Each of these three read-only variables holds the time stamp that represents the time that the operation (of the respective variable) was performed.

- When no Logic (New file creation) is present these timestamps are set to default text representations.
- Time stamps are displayed in the format 'Mon DD YYYY HH:MM:SS' [Jun 22 1981 14:20:00]
- Each time a 'Save' operation is performed in the 'FlexLogic Equation Editor' screen, the 'FlexLogic Editor Last Saved' entry gets updated.
- Based on the values present at each launch of the 'FlexLogic Equation Editor' screen, internal validation prompts the relevant messages. These prompts must be followed to ensure that the 'FlexLogic' configuration is synchronized with the 'Logic Designer'. These three variables are shown in color in the FlexLogic Equation Editor based on timestamps. Color is used to indicate the change (non-synchronization if any) of FlexLogic between the FlexLogic Editor and Logic Designer Screens.

File Conversion and Handling of Time Stamps: When File Conversion is applied the three time stamps are processed (either carry forwarded, defaulted, updated with latest PC time) based on the Source and Destination File versions and Order code supported.

The following cases depict the nature of the three time stamps after a file conversion.

Source Version	Target Version	Is FlexLogic Change Detected?	Time Stamps [LDLs, LDLc, FELs]**
>= 160	>= 160	YES	[0^ , 0 , PCTime**]
>= 160	>=160	NO	*Existing time stamps are copied to the converted file
< 160	>= 160	YES	[0 , 0 , PCTime]

Source Version	Target Version	Is FlexLogic Change Detected?	Time Stamps [LDLs, LDLc, FELs]**
< 160 (& > 120***)	>= 160	NO	[PCTime, PCTime, PCTime,]
**	LDLs – Logic Designer Last Saved, LDLc– Logic Designer Last Compiled and FELs – FlexLogic Editor Last Saved		
** PCTime	The time that the file conversion took place		
^ 0	Indicates the time stamps are being defaulted		
***	There is no support for Logic Designer [Graphical Editor] below version 130		
*	For each specific case, the source files for Logic Designer (Graphical) content will also get copied “as is” to the destination folder. This enables the user to retain old content “as is”.		

In a typical scenario where both the FlexLogic Designer and FlexLogic Editor are used for configuring FlexLogic, the updated time stamps appear as shown in the following figure.

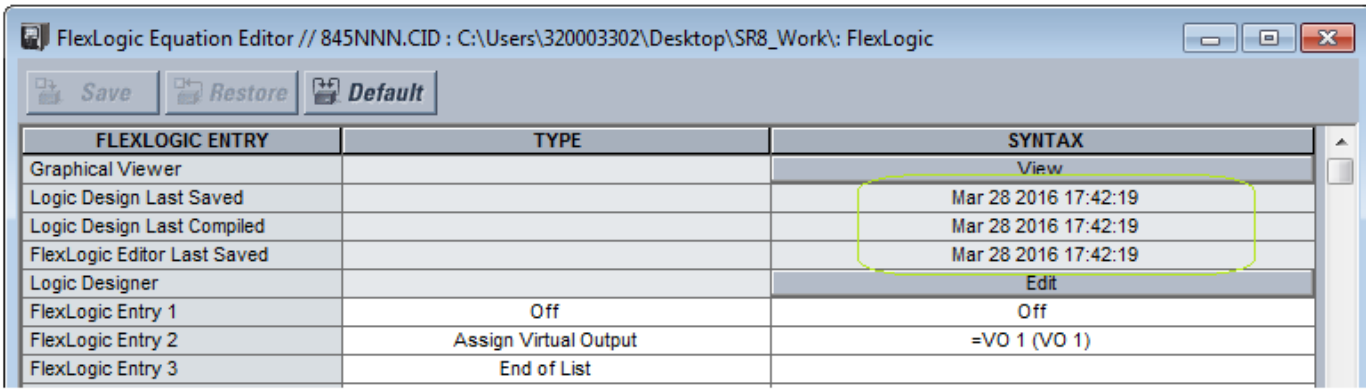

Logic Designer: This entry can be used to initiate the launch of the Logic Designer screen. Once chosen, the existing FlexLogic Equation Editor screen is set to Read-only and then the Logic Designer screen launch is initiated. If the user wants to re-visit the FlexLogic Editor Screen, any existing read-only screen has to be closed first. Then, the screen has to be re-opened. The FlexLogic Editor screen is now editable, again.

In order to maintain synchronization of FlexLogic, the following update rules are defined.

For example, when a user tries to open the ‘FlexLogic Equation Editor’ of a particular device or file.

- If the Logic Designer screen is open and in Edit mode, a message prompts to save any changes. The FlexLogic Equation Editor is not launched.
- If the Logic Designer is open and in saved mode (no edits to save or compile), the Logic Designer screen is closed and then the FlexLogic Equation Editor launch is initiated.

11.2.4 VIEWING FLEXLOGIC GRAPHICS

To verify that the FlexLogic equation(s) and its selected parameters produce the desired logic, the expression can be viewed by converting the derived equation into a graphic diagram. It is strongly recommended and helpful to view an equation as a graphic diagram before it is saved to the relay in order to troubleshoot any possible error in the equation.

To View the FlexLogic Graphic

Click on the View button at the top of the Type column in the FlexLogic Equation screen, see previous figure. Provided the equation is entered correctly, this generates a graphical representation of the expression previously entered. If any operator inputs are missing or any FlexLogic rules have been violated, the EnerVista D&I Setup software displays a message box indicating any problems in the equation when the view feature is attempted.

The expression is also listed to the left of the diagram to demonstrate how the diagram was created. The End statement is added as parameter 5 (End of list).

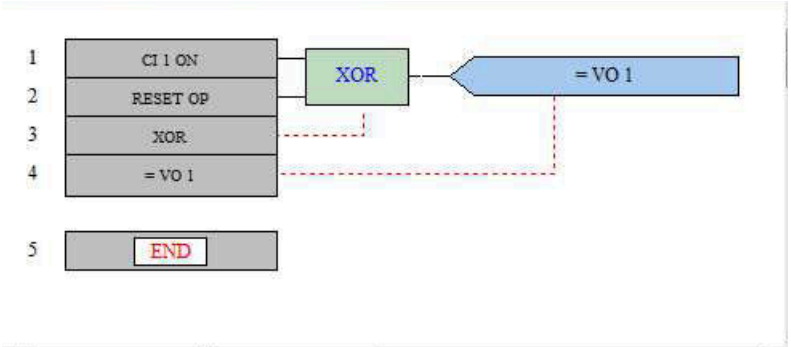

Figure 220: FlexLogic Graphic Example

11.2.5 FLEXELEMENTS

There are 8 identical FlexElements. A FlexElement is a universal comparator, that can be used to monitor any analog actual value measured or calculated by the relay, or a net difference of any two analog actual values of the same type. Depending on how the FlexElement is programmed, the effective operating signal could be either a signed signal or an absolute value.

You can configure the element to respond either to a signal level or to a rate-of-change (delta) over a pre-defined period of time. The output operand is asserted when the operating signal is higher than a threshold or lower than a threshold chosen.

When configuring a FlexElement, keep in mind the following limitations:

1. The analog inputs for any FlexElement must be from the same quantity.
   - current and current (in any combination, phase-symmetrical, phase-phase, kA-A, differential, restraint, etc.)
   - voltage and voltage (as above)
   - active power and active power (Watts and Watts)
   - reactive power and reactive power (Vars and Vars)
   - apparent power and apparent power (VA and VA)
   - angle and angle (any, no matter what signal, for example angle of voltage and angle of current are a valid pair)
   - % and % (any, for example THD and harmonic content is a valid pair)
   - V/Hz and V/Hz
   - °C and °C
   - I^2t and I^2t
   - FlexElement actual and FlexElement actual
2. For all the other combinations, the element displays 0.000 or N/A and will not assert any output operand.
3. The analog value associated with one FlexElement can be used as an input to another FlexElement "Cascading".

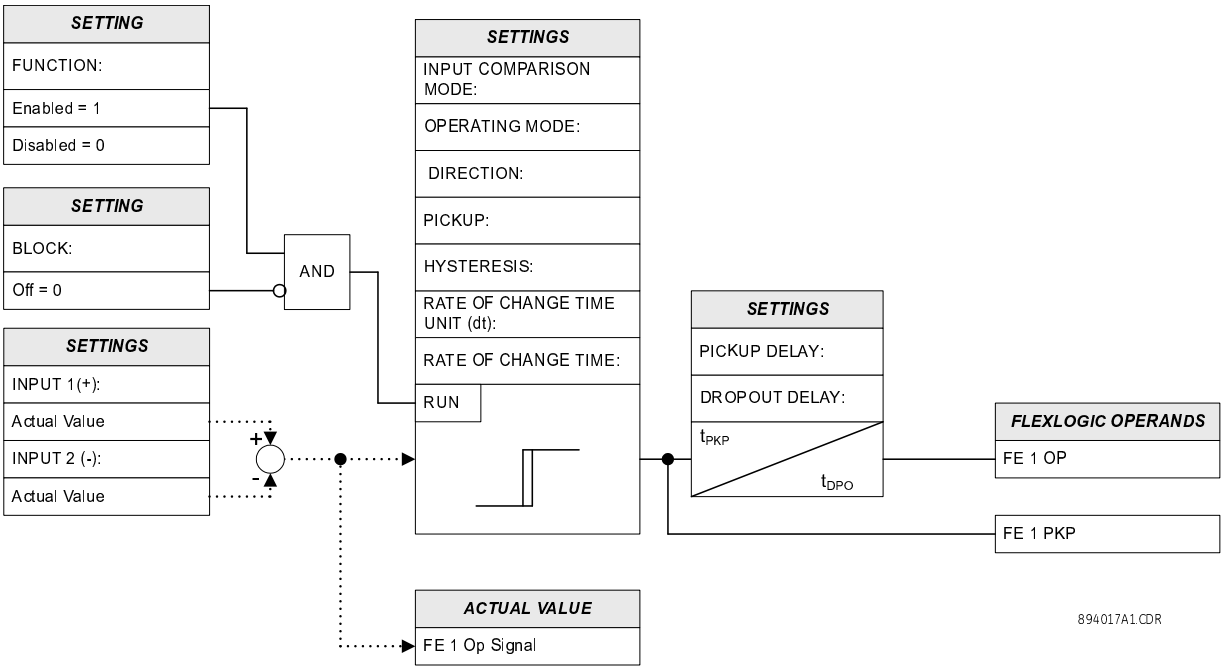

Figure 221: FlexElement logic diagram

11.2.5.1 FLEXELEMENT SETTINGS

Path: ***Setpoints*** > ***FlexLogic*** > ***FlexElements*** > ***FlexElement 1***

FUNCTION

Range: Disabled, Enabled

Default: Disabled

NAME

Range: Up to 13 alphanumeric characters

Default: FlexEl 1

INPUT 1 (+)

Range: Off, any FlexAnalog signal

Default: Off

This setting specifies the first input (non-inverted) to the FlexElement. Zero is assumed as the input if this setting is set to `Off`. For proper operation of the element at least one input must be selected. Otherwise, the element will not assert its output operands.

INPUT 2 (-)

Range: Off, any FlexAnalog signal

Default: Off

This setting specifies the second input (inverted) to the FlexElement. Zero is assumed as the input if this setting is set to `Off`. For proper operation of the element at least one input must be selected. Otherwise, the element will not assert its output operands.

This input should be used to invert the signal if needed for convenience, or to make the element respond to a differential signal such as for a top-bottom oil temperature differential alarm.

A warning message is displayed and the element does not operate if the two input signals are of different types, for example if one tries to use active power and phase angle to build the effective operating signal.

PICKUP

Range: -30.000 to 30.000 pu in steps of 0.001 pu

Default: 1.000

This setting specifies the operating threshold for the effective operating signal of the element.

If the `Over` direction is set, the element picks up when the operating signal exceeds the Pickup value.

If the `Under` direction is set, the element picks up when the operating signal falls below the Pickup value.

The ***HYSTERISIS*** setting controls the element drop out.

Notice that both the operating signal and the pickup threshold can be negative when facilitating applications such as reverse power alarms.

The FlexElement can be programmed to work with all analog values measured or computed by the relay. The ***PICKUP*** setting is entered in pu values using the following definitions of the base units:

Definitions of the Base Unit for the FLEXELEMENT

Measured or calculated analog value related to:	Base Unit
Voltage	V_{BASE} = maximum nominal primary RMS value of the Input 1(+) and input 2(-) inputs
Current	I_{BASE}= maximum nominal primary RMS value of the Input 1(+) and input 2(-) inputs
Power	P_{BASE}= maximum value of V_{BASE} * I_{BASE} for the Input 1(+) and input 2(-) inputs
Power Factor	PF_{BASE}= 1.00
Phase Angle	DegBASE= 360 deg

Measured or calculated analog value related to:	Base Unit
Harmonic Content	H_{BASE} = 100% of nominal
THD	THD_{BASE}= 100%
Frequency	f_{BASE}= nominal frequency as entered under the SYSTEM SETUP menu
Volt/Hz	BASE = 1.00
dcmA	BASE = DCMA INPUT MAX (setting under the DCMA menu). If two DCMA signals are used by the FlexElement, the maximum of the above setting among the two elements is used as the base.
RTDs	BASE = 100.00°C
I^2t (arcing Amps)	BASE = 2000 kA^2*cycle
Load Current	I_{BASE} = Full Load Current (FLA) of the generator
Unbalance Current	BASE = 100%
Differential and Restraint Currents (Percent Differential and Overall Differential)	I_{BASE} = Primary of the CT with maximum primary current rating
Source Energy (Positive and Negative Watthours, Positive and Negative Varhours)	EBASE = 10000 MWh or MVAh, respectively
3rd Harm VN in Sec, 3rd Harm V0 in Sec, 3rd Harm VN+V0 in Sec	VBASE = Nominal Secondary Auxiliary voltage of the slot J-Vx (secondary) setpoints
Positive Impedance	Z_{BASE} = PhaseVTSecondary / PhaseCTSecondary, where PhaseVTSecondary and PhaseCTSecondary are the secondary nominal voltage and the secondary nominal current of voltage and current bank to calculate the impedance. PhaseVTSecondary is specified in the setting under Setpoints > System > Voltage Sensing, and PhaseCTSecondary is determined by the order code.
Harmonic Detection	HD_{BASE} = 1.00
Differential and Restraint Currents (RGF)	IBASE = CT Primary from the CT bank selected for the RGF element (the same base as the one for the RGF element)
Thermal Capacity Used	BASE = 100%
Estimated Time on OL	BASE = 10 seconds

HYSTERESIS

Range: 0.1 to 50.0% in steps of 0.1%

Default: 3.0%

This setting defines the pickup – drop out relation of the element by specifying the width of the hysteresis loop as a percentage of the pickup value as shown above in the *Direction, Pickup, and Hysteresis setpoints* figure.

RATE OF CHANGE TIME UNIT (dt)

Range: millisecond, second, minute

Default: milliseconds

This setting specifies the time base dt when programming the FlexElement as a rate of change element.

The setting is applicable only if the Input Comparison Mode is set to `Delta`.

RATE OF CHANGE TIME

Range: 40 to 65535 in steps of 1

Default: 40

This setting specifies the duration of the time interval for the rate of change mode of operation.

The setting is applicable only if the Input Comparison Mode is set to `Delta`.

11.2.5.2 FLEXELEMENTS - EXAMPLES

T13.8 kV power system:

- Phase VT Connection: Wye
- Phase VT Secondary: 66.4 V
- Phase VT Ratio: 120:1 (phase to neutral primary voltage = 120*66.4 = 7968 V)
- Aux VT Connection: Vab
- Aux VT Secondary: 115 V
- Aux VT Ratio: 120:1 (phase-phase primary voltage = 13800V)
- Phase CTs Primary: 2000 A
- Ground CT Primary: 500 A
- Frequency: 60Hz

Detecting voltage difference:

The voltage difference between calculated phase-phase voltage derived from Wye connected phase VTs, and the directly measured phase-phase voltage from auxiliary VT can be monitored by programming a FlexElement.

FlexElement settings:

- Input 1(+): J2 Vab RMS
- Input 2 (-): J2 Vaux RMS (input from VT connected between phases A and B)
- Operating Mode: Absolute
- Input Comparison Mode: Level
- Direction: Over

The analog input J2 Vab is phase-phase voltage computed by the relay based on three-phase Wye voltages. As per the Phase VT setup, the primary RMS nominal voltage for J2 Vab input is 66.4 V *120 = 7.968kV.

The analog input J2 Vaux is directly measured phase-phase voltage and its primary RMS nominal voltage is 115V *120 = 13.8kV

V_{BASE} = max (7.968kV, 13.8kV) = 13.8kV.

If we want to detect 2% voltage difference (2% @13.8kV = 276V) between the computed phase to phase Vab voltage, and the measured Vaux voltage from a VT connected between phases A and B, the pickup per-unit setting for the FlexElement can be set as follows:

Pickup = 276V/13800V = 0.02 pu

If the voltage difference between the selected inputs becomes bigger than 276 Volts, the FlexElement will pickup, and operate, which can be used to energize contact, or initiate alarm, or trip.

Detecting current difference between Neutral and Ground currents:

In a balanced system, the computed neutral and the measured ground currents is 0 Amps. However, during ground faults their values are not zero. More specifically if the phase and ground CTs are located on the same transformer winding, such that the ground CT is installed on the grounded neutral of the winding, their values supposed to be the same during external fault, and would be different during internal fault. The FlexElement can be used for detecting the differential signal between these quantities. For example the following condition can be made:

I_{BASE} = max (2000A, 500A) = 2000A

FlexElement settings:

- Input 1(+): J1
- Input 2 (-): J1 Ig
- Operating Mode: Absolute
- Input Comparison Mode: Level
- Direction: Over
- Pickup = 200A/2000A: 0.1 pu

When no CT saturation conditions exist, if the difference between the neutral current and the ground current becomes more than 200 Amps primary, this can be treated as an indication of an internal ground fault, which should be cleared. With I_{BASE} = max (2000A, 500A) = 2000A, the pickup can be set as follows: Pickup = 200A/2000A = 0.1 pu

Detecting Low 3-ph Apparent Power:

V_{BASE} = 7.968kV

I_{BASE} = 1000 A

$P_{BASE} = V_{BASE} * I_{BASE}$ = 7968 V *2000A = 15.936MVA

The FlexElement can be set to detect under-power conditions and produce alarm, or trip if the apparent power is less than 500kVA. In this case the pickup setting for the FlexElement can be computed as follows:

Pickup = 0.5MVA / 15.936 MVA = 0.0313 pu

FlexElement settings:

- Input 1(+): Pwr1 Apparent
- Input 2(-): Off
- Operating Mode: Absolute
- Input Comparison Mode: Level
- Direction: Under
- Pickup: 0.0313 pu

Power Factor Cap Bank Switch-In Example

PF_{BASE} = 1.00

FlexElement can be programmed to switch-in cap bank, if for example the measured 3Ph Power Factor has negative value(lag), and drops below the pickup of -0.7 pu. Programming the Hysteresis setpoint to the desired percentage can define the PF value at which the cap bank can be switched off. For example, if the cap bank is required to be switched off at PF value of -0.9, than the percent hysteresis is computed as:

% hysteresis = ((abs(-0.9)-abs(-0.7))/ PFBASE)*100 = 20%

> *Note:*
> *The minimum pickup should not be less than 0.01 pu, as the measurement resolution for the Power Factor is 0.01.*

- Input 1(+): Pwr1 PF
- Input 2(-): Off
- Operating Mode: Signed
- Input Comparison Mode: Level

- Direction: Under
- Pickup: -0.700 pu
- Hysteresis: 20.0 %

Detecting high THD (Total Harmonic Distortion)

THD_{BASE} = 100%

A FlexElement can be programmed to detect excessive amount of harmonics in the system, and Alarm, Trip, or switch-in/out an equipment to suppress the high amount of harmonics. The Total Harmonic Distortion is an estimation of how the AC signals are distorted and as shown above, it can be used as an input for the FlexElement.

For example if an operation from a FlexElement is desired when the THD for the phase A voltage exceeds 20%, then having a base of 100%, the pickup setting should be set to 0.200 pu.

- Input 1(+): J2 Phase A THD
- Input 2(-): Off
- Operating Mode: Absolute
- Input Comparison Mode: Level
- Direction: Over
- Pickup: 0.200 pu

Note:
The harmonics and THD values are measured as percentage of the fundamental signal, and have resolution of 0.01%. However for the minimum pickup setting of 0.001 pu, this would mean percentage step of 0.1%.

Simple V/Hz ratio detection for protected equipment

V/Hz_{BASE} = 1.00High V/Hz ratios in the power system are harmful for the insulation of the protected equipment – transformer, generator, or elsewhere in the power system. If not detected, it can lead to excessive heat and degradation of the insulation which will damage the equipment. A FlexElement can be used for simple detection of V/Hz values, and to issue an Alarm, or Trip, if detected above Pickup setting. Since the base unit for V/Hz = 1.00, programming of the pickup setpoint is straight forward for the desired FlexElement operation. For the example given here, a value of 1.200 pu has been selected.

- Input 1(+): Volts Per Hertz 1Input 2(-): OffOperating Mode: AbsoluteInput Comparison Mode: LevelDirection: OverPickup: 1.200 puHysteresis: 8.3%

Now, if the FlexElement is needed to drop down when the V/Hz ratio becomes equal to 1.1, the hysteresis can be calculated as:1.2pu-1.1pu = 0.1 puHysteresis = (0.1*100)/1.2 = 8.3%

High Breaker Arcing current detection

High breaker arcing current can be detected by using a FlexElement during the opening of a breaker. One or more FlexElements can be configured for detecting levels of maximum arcing current during the tripping of a particular breaker, and give an indication for the health of the breaker.

The base unit for the breaker arcing current is programmed in the relay as: BASE = 2000 kA^2*cycle

- Input 1(+): Total Arcing Current
- Input 2(-): Off
- Operating Mode: Absolute
- Input Comparison Mode: Level
- Direction: Over
- Pickup: 2.500 pu
- Hysteresis: 0.0%

To configure the pickup setpoint for a total arcing current of 5000kA^2/cycle, the per-unit pickup value can be calculated as follows:

Pickup = 5000kA^2 *cycle/2000 kA^2*cycle = 2.500 pu

CHAPTER 12

TESTING

12.1 CHAPTER OVERVIEW

This chapter contains the following sections:

Chapter Overview 544
Testing display hierarchy 545
Simulation 546
Test LEDs 550
Contact Inputs 551
Output Relays 552
GOOSE 553

12.2 TESTING DISPLAY HIERARCHY

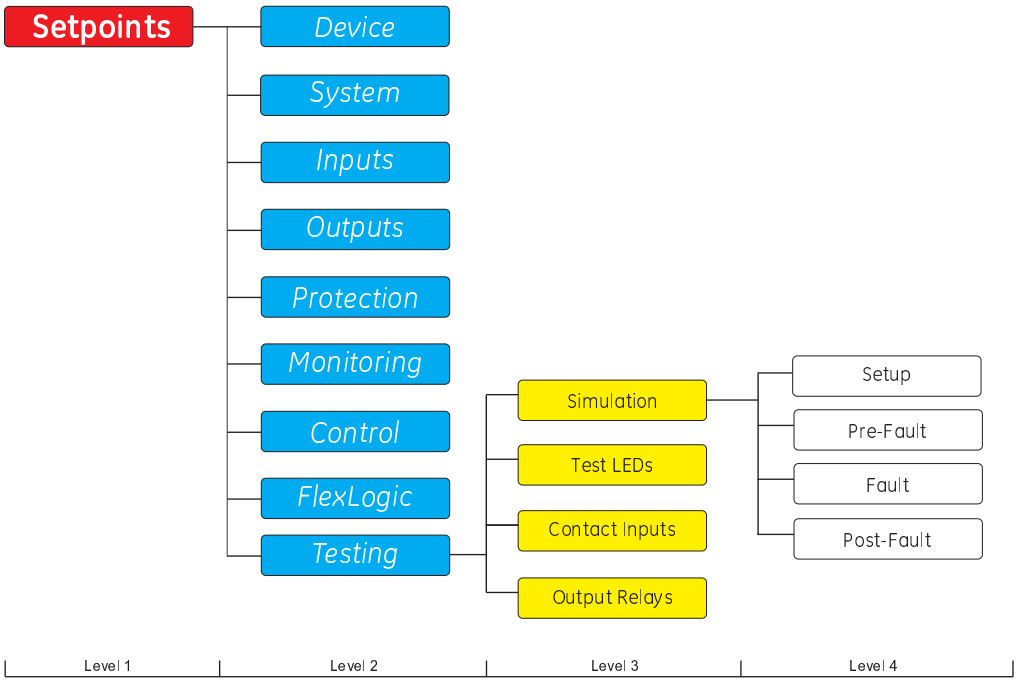

Figure 222: Testing Display Hierarchy

Path:*Setpoints* > *Testing*

- General
- Simulation
- Test LEDs
- Contact Inputs
- Output Relays

The relay can simulate current and voltage inputs when the Simulation feature is enabled. Other test operations are also possible such as LED lamp test of each color, contact input states and testing of output relays.

12.3 SIMULATION

Path: ***Setpoints*** > ***Testing*** > ***Simulation***

- Setup
- Pre-Fault
- Fault
- Post-Fault

The Simulation feature is provided for testing the functionality of the relay in response to programmed conditions, without the need of external AC voltage and current inputs. First time users will find this to be a valuable training tool. System parameters such as currents, voltages and phase angles are entered as setpoints. When placed in simulation mode, the relay suspends reading actual AC inputs, generates samples to represent the programmed phasors, and loads these samples into the memory to be processed by the relay. Normal (pre-fault), fault and post-fault conditions can be simulated to exercise a variety of relay features. There are three sets of input parameters used during simulation, each provides a particular state of the system as follows.

Note:
Simulation mode current input should be set at more than three times the CT rating. All Simulation setpoints revert to default values at power-up.

Note:
Testing of Arc Flash functionality is not possible with the Simulation feature.

12.3.1 SIMULATION SETUP

Path: ***Setpoints*** > ***Testing*** > ***Simulation*** > ***Setup***

SIMULATION STATE

Range: Disabled, Prefault State, Fault State, Postfault State

Default: Disabled

Disable this setpoint if actual system inputs are to be monitored. If set to any other value, the relay is in test mode and actual system parameters are not monitored, including Current, Voltage, and Contact Inputs. The system parameters simulated by the relay will be those in the section below that correspond to the set value of this setpoint. For example, if set to `Fault`, the system parameters will be set to those defined by the **FAULT** setpoint values.

PRE-FAULT TO FAULT TRIGGER

Range: Off, On, Any FlexLogic Operand

Default: Off

POST-FAULT TO PRE-FAULT TRIGGER

Range: Off, On, Any FlexLogic Operand

Default: Off

FORCE RELAYS

Range: Disabled, Enabled

Default: Disabled

When in test mode, and **FORCE RELAYS** is enabled, relay states can be forced from the ***Setpoints*** > ***Testing*** > ***Output Relays*** menu, which overrides the normal operation of the output contacts. When in test mode, and **FORCE RELAYS** is disabled, the relay states maintain their normal operation. Forcing of output relay states is not performed when the Simulation State is disabled.

FORCE LEDS

Range: Disabled, Enabled

Default: Disabled

When in test mode, and **FORCE LEDS** is enabled, LED states and colors can be forced from the ***Setpoints*** > ***Testing*** > ***Test LEDs*** menu, this will override the normal operation of the LEDs. When in test mode, and **FORCE LEDS** is disabled, the LED states and colors will maintain their normal operation. Forcing of LEDs is not performed when the **SIMULATION STATE** is disabled.

12.3.2 SIMULATION PRE-FAULT

This state is intended to simulate the normal operating condition of a system by replacing the normal input parameters with programmed pre-fault values. For proper simulation, values entered here must be below the minimum trip setting of any protection feature.

Voltage magnitudes and angles are entered as Wye values only. The voltage setpoints are not available if the corresponding VT Bank ***PHASE VT CONNECTION*** setpoint is Delta. Voltages are set in secondary VT units.

The CT and VT Bank availability is dependent on the installed Order Code options.

Path:*Setpoints* > ***Testing*** > ***Simulation*** > ***Pre-Fault***

J2 Prefault Van(Vbn,Vcn,Vx) Voltage:

Range: 0.00 to 300.00 V in steps of 0.01

Default: 0.00 V

J2 Prefault Van(Vbn,Vcn,Vaux) Angle:

Range: -359.9° to 0.0° in steps of 0.1

Default: 0.0°

J1(K1,K2) Prefault Phase Ia(Ib,Ic):

Range: 0.000 to 46.000 x CT in steps of 0.001 x CT

Default: 0.000 x CT

Phase current magnitudes are entered as a multiple of the corresponding CT Bank ***PHASE CT PRIMARY*** setpoint.

J1(K1,K2) Prefault Phase Ig:

Range: For Ground CT: 0.000 to 46.000 x CT in steps of 0.001 x CT

Default: 0.000 x CT

The ground current magnitude setpoint range is dependent on the ground CT type as defined in the Order Code options. For Ground CT, the magnitude is entered as a multiple of the corresponding CT Bank ***GROUND CT PRIMARY*** setpoint.

J1(K1,K2) Prefault Ia(Ib,Ic,Ig) Angle:

Range: -359.9° to 0.0° in steps of 0.1

Default: 0.0°

12.3.3 SIMULATION FAULT

The Fault state is intended to simulate the faulted operating condition of a system by replacing the normal input parameters with programmed fault values.

Voltage magnitudes and angles are entered as Wye values only. The voltage setpoints are not available if the corresponding VT Bank ***PHASE VT CONNECTION*** setpoint is Delta. Voltages are set in secondary VT units.

The CT and VT Bank availability is dependent on the installed Order Code options.

Path:*Setpoints* > ***Testing*** > ***Simulation*** > ***Fault***

J2 Fault Van(Vbn,Vcn,Vx) Voltage:

Range: 0.00 to 300.00 V in steps of 0.01

Default: 0.00 V

J2 Fault Van(Vbn,Vcn,Vaux) Angle:

Range: -359.9° to 0.0° in steps of 0.1

Default: 0.0°

J1(K1,K2) Fault Phase Ia(Ib,Ic):

Range: 0.000 to 46.000 x CT in steps of 0.001 x CT

Default: 0.000 x CT

J1(K1,K2) Fault Phase Ig:

Range: For Ground CT: 0.000 to 46.000 x CT in steps of 0.001 x CT

Default: 0.000 x CT

J1(K1,K2) Fault Ia(Ib,Ic,Ig) Angle:

Range: -359.9° to 0.0° in steps of 0.1

Default: 0.0°

12.3.4 SIMULATION POST-FAULT

The Post-fault state is intended to simulate a system that has tripped by replacing the normal input parameters with programmed post-fault values.

Voltage magnitudes and angles are entered as Wye values only. The voltage setpoints are not available if the corresponding VT Bank ***PHASE VT CONNECTION*** setpoint is Delta. Voltages are set in secondary VT units.

The CT and VT Bank availability is dependent on the installed Order Code options.

Path:*Setpoints* > ***Testing*** > ***Simulation*** > ***Post-Fault***

J2 Postfault Van(Vbn,Vcn,Vx) Voltage:

Range: 0.00 to 300.00 V in steps of 0.01

Default: 0.00 V

J2 Postfault Van(Vbn,Vcn,Vaux) Angle:

Range: -359.9° to 0.0° in steps of 0.1

Default: 0.0°

J1(K1,K2) Postfault Phase Ia(Ib,Ic):

Range: 0.000 to 46.000 x CT in steps of 0.001 x CT

Default: 0.000 x CT

J1(K1,K2) Postfault Phase Ig:

Range: For Ground CT: 0.000 to 46.000 x CT in steps of 0.001 x CT For Sensitive Ground CT: 0.000 to 4.600 x CT in steps of 0.001 x CT For CBCT: 0.000 to 15.000 A in steps of 0.001

Default: 0.000 x CT

J1(K1,K2) Postfault Ia(Ib,Ic,Ig) Angle:

Range: -359.9° to 0.0° in steps of 0.1

Default: 0.0°

12.4 TEST LEDS

The Test LEDs setting is used to program the state and color of each LED when in test mode and ***FORCE LEDS*** is enabled.

> *Note:*
> *Test LEDs setpoints here will revert to default values at power-up.*

Path:*Setpoints* > *Testing* > *Test LEDs*

LED 1 (17)

Range: Off, Red, Green, Orange

Default: Off

LED 1 (24)

Range for 1(14): Off, Red, Green, Orange

Range for 15(24): Off, Orange

Default: Off

12.5 CONTACT INPUTS

This section is used to program the state of each contact input when enabled in test mode. The number of Contact Inputs available is dependent on the installed Order Code options.

> *Note:*
> *Contact Inputs setpoints here will revert to default values at power-up.*

Path: ***Setpoints*** > ***Testing*** > ***Contact Inputs***

CI 1(X):

Range: Off, On

Default: Off

The item name displays the user configurable name for the contact input.

12.6 OUTPUT RELAYS

This section is used to program the state of each output relay when ***FORCE RELAYS*** is enabled.

Select `Off` to force the output relay to the de-energized state, or select `On` to force the output relay to the energized state.

The number of Output Relays available is dependent on the installed Order Code options.

> *Note:*
> *Output Relays setpoints here will revert to default values at power-up.*

Path:*Setpoints* > *Testing* > *Output Relays*

OUTPUT RELAY 1(X)

Range: Off, On

Default: Off

12.7 GOOSE

When the relay provides GOOSE, a menu is available for testing GOOSE messaging

SETPOINTS > TESTING > GOOSE

TXGOOSE Sim Mode

Range: Disabled, Enabled

Default: Disabled

When disabled, the SIM bit in all transmitted GOOSE messages are set to `FALSE`. When enabled, the SIM bit in all transmitted GOOSE messages are set to `TRUE`.

Accept Sim GOOSE

Range: Disabled, Enabled

Default: Disabled

When disabled, the relay SIM attribute (LPHD1.Sim.StValin) is set to `FALSE` and the GOOSE/SV messages received with simulation bit set are ignored. When enabled, the relay SIM attribute (LPHD1.Sim.StValin) is set to `TRUE` so that if GOOSE/SV messages are received with the SIM bit set, these will be used in place of the normal messages.

CHAPTER 13

STATUS

13.1 CHAPTER OVERVIEW

This chapter contains the following sections:

Chapter Overview 556
Summary 557
Generator status 560
Breaker status 562
Information 563
Communications status 566
Other status settings 570

13.2 SUMMARY

Configurable Single Line Diagram (SLD)

The status of each SLD screen is displayed under ***Status*** > ***Summary*** > ***Configurable SLDs*** > ***SLD1(X)***.

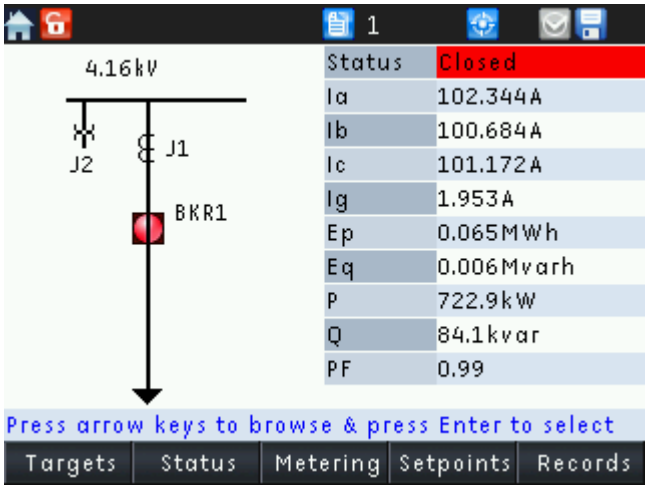

Figure 223: Sample SLD

Once in the SLD screen, by default no breaker/switch is highlighted or selected. Pressing the Up/Dn (or Up/Dn/Left/Right) navigation keys highlights BKR1 and navigates through BKR1, 2, 3, etc. and then through Switch1, 2, 3, etc.

If the Up/Dn/Left/Right keys are used, the selection moves to the closest available breaker/switch from the currently highlighted object. To select the breaker/switch, press the enter key. Upon pressing the Enter key, the tab labels change to the programmable tab pushbutton labels and a flash message for the breaker selected appears (Flash Message: `BKR1 Selected`). Pressing Escape de-selects the breaker/switch and the tab pushbutton labels.

Annunciator

The graphical annunciator panel emulates a physical annunciator panel. Indicators on the graphical panel are backlit and have a description of the alarm condition that lights each indicator. The annunciator panel status window shows the alarms that are active.

To reset an active alarm, first highlight the active alarm using the navigation keys, then press the reset button to reset the highlighted alarm. If no indicator is selected, all alarms on the page are reset by pushing the reset button.

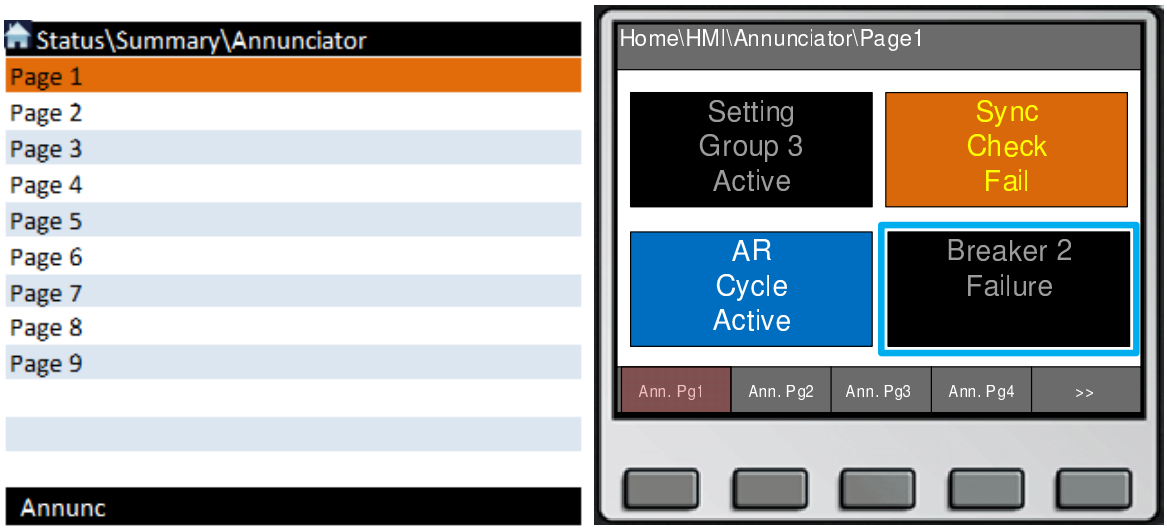

Figure 224: Physical and Graphical Annunciator Panels

Tab pushbuttons

Navigation

There are two ways to navigate to the Tab Pushbutton control pages:

- Relay Home Screens
- **Path: *Status* > *Summary* > *Tab Pushbuttons*** (from relay) **Home Screens**

By default, the Tab Pushbuttons summary page is programmed as one of the Home Screens. Press the home button repeatedly to cycle through the programmed Home Screens.

> *Note:*
> *Tab pushbuttons can only be controlled physically through the front panel of the relay. Their operation is not available from the setup software.*

Path: *Status* > *Summary* > *Tab Pushbuttons*

The initial view of the Tab Pushbutton controls is the Summary page, which shows the status of all 20 pushbuttons. To operate the pushbuttons, navigate to the individual pages where the tab pushbuttons can be used to activate them.

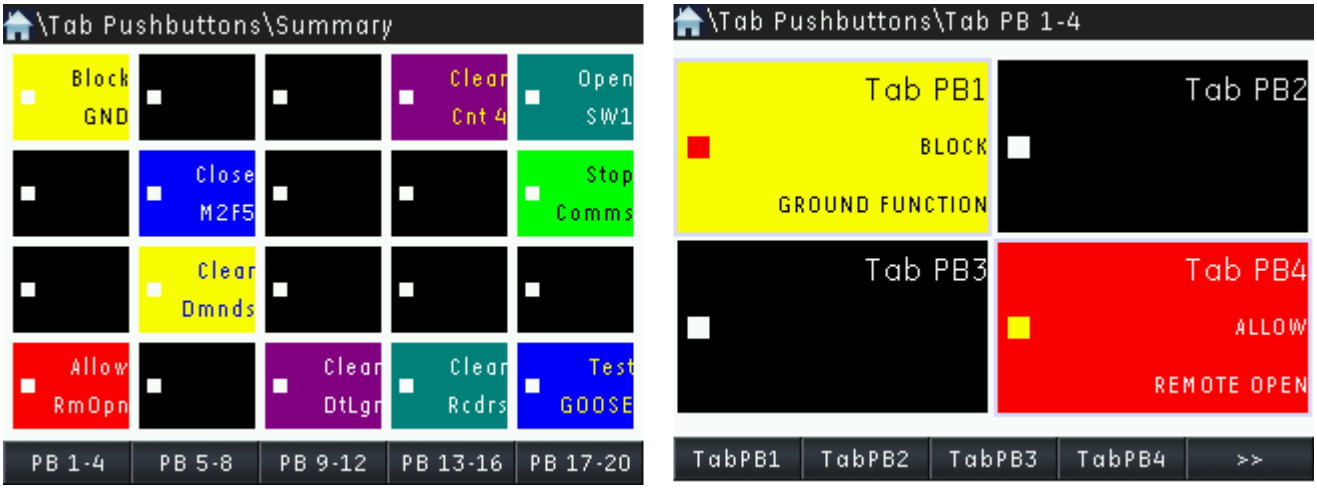

Figure 225: Tab pushbutton summary (left) and detailed view (right)

Only the tab pushbuttons that are not set to Disabled are shown in color; labels for the tab pushbuttons are shown for both active and disabled pushbuttons if labels have been configured. (Configure tab pushbuttons from ***Device*** > ***Front Panel*** > ***Tab PBs*** > ***Tab PB1(X)***.)

When the actual button is pressed, the button on the screen is highlighted in blue and the PB [X] PRESS operand becomes active. Although a disabled pushbutton can be pressed, no action is taken and its operands are not activated. Pressing ESCAPE returns the screen to Tab Pushbutton summary page. The Short Text for each Tab Pushbutton is used on the Summary Page.

Pressing >> shows the next set of tab pushbuttons. For example, when in the page with pushbuttons 1 to 4, pressing >> will navigate to the screen with pushbuttons 5 to 8. Press >> to cycle through all five pushbutton screens. To go from page 2 to page 1, press >> 4 times to cycle through and navigate to page 1 with pushbuttons 1 to 4. Alternatively, escape to the overall summary screen and navigate to any desired page of pushbuttons.

13.3 GENERATOR STATUS

Path: ***Status*** > ***Generator***

GENERATOR STATUS

Range: Online, Offline, Tripped, Unknown

Default: Offline

The Generator Status can be one these options: Online (connected to the system through breaker), Offline (either not running or not connected to the system), Tripped (any tripped and with the system breaker open), or Unknown (the generator is not tripped, online or offline, or the breaker status is unknown). Terminal voltage and breaker status is used to determine if generator is online. The status is also available as FlexLogic operands, and only one status is possible at a time. Refer to the generator status logic diagram.

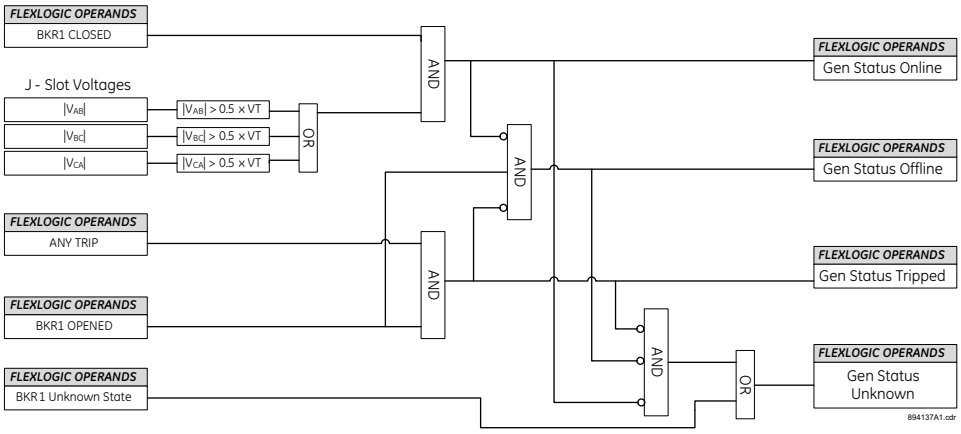

Figure 226: Generator Status Logic Diagram

> *Note:*
> *The Generator breaker has to be configured as Breaker 1. If it is not configured as Breaker 1 or its status is unknown, the Generator Status shows as Unknown.*

RUNNING HOURS

Range: 0 to 100,000 hrs in steps of 1

Default: 0 hrs

The Running Hours field shows accumulated generator running time in hours. Refer to the Running Hours element description for more details.

FIELD BKR STATUS

Range: Unknown, Open, Close

Default: Unknown

The Field Breaker Status shows Open or Close if the FIeld Breaker Discrepancy element is configured. Otherwise the status displays Unknown.

THERMAL CAPACITY USED

Range: 0 to 100 % in steps of 1 %

Default: 0 %

The Thermal Capacity Used value is continuously calculated in percentage and irrespective of whether the Thermal Model element is enabled or not enabled. This value is only displayed when the Thermal Model element is enabled.

ESTIMATED TRIP TIME ON OL

Range: Never, 0 to 65000 s in steps of 1 s

Default: Never

This value is available when the Thermal Overload element is enabled, and represents the estimated time to trip (in seconds) from the thermal overload model assuming that the generator current remains at its current level. By default the value is 'Never' which indicates that the Thermal Overload element never operated.

13.4 BREAKER STATUS

The status of the breaker/breakers is displayed individually. If the selected trip output relay is Form A-type, the status of the breaker Trip and Close circuitry is also displayed here. The screen also includes the total accumulated arcing current information for the breaker.

Path:*Status* > *Breaker* > *Breaker X Status*

STATE

Range: Not Configured, Opened, Closed, Disconnected, State Unknown

The Unknown state is displayed upon discrepancy of the 52a and 52b contacts for more than 30 milliseconds.

BKR TROLLEY STATE

Range: Not Configured, Opened, Closed, State Unknown

TRIP COIL

Range: Not Set, Fail, OK

The Trip Coil state is displayed when Form -A output relays are used, and Trip Coil monitoring is enabled.

CLOSE COIL

Range: Not Set, Fail, OK

The Close coil state is displayed when Form -A output relays are used, and Close Coil monitoring is enabled.

TOTAL ARCING CURRENT

Range: 0.00 to 42949672.95 kA2-cyc in steps of 0.01

The measure of arcing current from all three phases during breaker trips. Refer to the Breaker Arcing Current element description (under ***Setpoints*** > ***Monitoring*** > ***Breaker***) for more details.

13.5 INFORMATION

Path: ***Status*** > ***Information*** > ***Relay Info***

The Information pages display fixed device information. the pages are divided into three sections: Main CPU, Comms CPU, and Hardware Versions.

Main CPU

The Information related to the Main CPU is displayed here.

Path: ***Status*** > ***Information*** > ***Relay Info*** > ***Main CPU***

- **Order Code:** The installed Order Code
- **Product Serial #:** The relay serial number
- **Hardware Revision:** The hardware revision of the relay
- **Firmware Version:** The firmware version of the Main CPU
- **Firmware Date:** The Main CPU firmware build date in the format mm/dd/yyyy
- **Firmware Time:** The Main CPU firmware build time
- **Boot 1/2 Version:** The boot 1/2 code version of the Main CPU
- **Boot 1/2 Date:** The Main CPU boot 1/2 code build date in the format mm/dd/yyyy
- **Boot 1/2 Time:** The Main CPU boot 1/2 code build time
- **MAC Address 1:** The MAC address for copper Ethernet port 1
- **Remote CANBUS RMIO:** The commissioned value of the CANBUS IO is displayed here. If the relay has never been commissioned then the value is None, i.e. default = None and Range = 6 alphanumeric characters.
- **NUM of RMIO RTDs:** The number of remote RTDs detected

Comms CPU

The Information related to the Comms CPU is displayed here.

Path: ***Status*** > ***Information*** > ***Relay Info*** > ***Comms CPU***

- **Comms CPU FW Version:** The firmware version of the Comms CPU
- **Comms CPU Firmware Date:**The Comms CPU firmware build date in the format mm/dd/yyyy
- **Comms CPU Firmware Time:** The Comms CPU firmware build time
- **Boot Version:** The boot code version of the Comms CPU
- **Boot Date:** The Comms CPU boot code build date in the format mm/dd/yyyy
- **Boot Time:** The Comms CPU boot code build time
- **MAC Address 1:** The MAC address for Ethernet port 4
- **MAC Address 2:** The MAC address for Ethernet port 5

Hardware versions

Path: ***Status*** > ***Information*** > ***Relay Info*** > ***Hardware Versions***

The Information related to the relay hardware is displayed here.

Hardware Versions	
FPGA Firmware Version	03:14:10:31
IO F CPLD	05:14:12:09
IO G CPLD	05:14:12:09
AN J CPLD	08:14:12:03
AN K CPLD	08:14:12:03
Display CPLD	02:13:05:10

Figure 227: Information for Hordware Versions

- **FPGA Firmware Version:** The firmware version of the FPGA
- **IO F CPLD:** The version of the CPLD in IO slot F
- **IO G CPLD:** The version of the CPLD in IO slot G
- **AN J CPLD:** The version of the CPLD in analog slot J
- **AN K CPLD:** The version of the CPLD in analog slot K
- **Display CPLD:** The version of the CPLD of the display

Environment

The Information related to Environmental is displayed here.

> *Note:*
> *The Temperature Display setpoint can be changed from Celsius to Fahrenheit under **Setpoints** > **Device** > **Installation**.*

Path: ***Status*** > ***Information*** > ***Environment***

- **Instantaneous Temperature:** The most recent temperature measurement taken by the EAM.
- **Firmware Version:** The software version of the EAM module found in the relay.
- **Last Poll Date/ Time:** The date and time on which the last measurements were recorded in the format MM/DD/YY and HH/MM/SS.
- **Average Humidity:** The average of all the humidity measurements taken over time (last 1 hr) by the EAM.
- **Maximum Humidity:** The maximum humidity measurement taken by the EAM since it began recording data.
- **Minimum Humidity:** The minimum humidity measurement taken by the EAM since it began recording data.
- **Average Ambient Temp:** The average of all the instantaneous temperature measurements taken over time (last 1 hr) by the EAM.
- **Maximum Ambient Temp:** The maximum temperature taken by the EAM since it began recording data.
- **Minimum Ambient Temp:** The minimum temperature taken by the EAM since it began recording data.
- **Humidity (e.g. <30%):** The accumulated amount of time (hrs) that the humidity measured by the EAM stayed in the range specified.
- **Temp (e.g. <=-20°C):** The accumulated amount of time (hrs) that the temperature measured by the EAM stayed in the range specified.
- **Temp and Humidity (e.g. >40°C and <55%):** The accumulated amount of time (hrs) that the temperature and humidity measured by the EAM stayed in the ranges specified.
- **Surge Count:** The number of surge (>500 V/1.2/50 µS) events that have occurred since the EAM started recording data.

The Information related to settings changes and settings file history is displayed here.

Settings Audit

Path: ***Status*** > ***Information*** > ***Settings Audit***

- **Last Setting Change:** The date and time of the last setting change.
- **File Modified:**
- **File Received:**
- **File Origin:**
- **File Name:**

13.6 COMMUNICATIONS STATUS

13.6.1 GOOSE

The relay supports 16 GOOSE transmissions and 64 GOOSE receptions each with 64 items per transmission or reception. Non-structured GOOSE is supported. Each item within the GOOSE message can be a digital or analog value. Messages are launched within one scan of a digital point status change or an analog exceeding its deadband.

The server supports a subset of the server features described in part 7.2 of the IEC61850 standard.

Goose Messaging

The details are shown in the table below:

Service	Launch Speed*	Support for Programmable time to live	# of Tx	# of Rx	Test Bit Support	Number of items in each transmission or reception	Number of remote inputs per relay
Configurable GOOSE	Within 2 ms (1 CPU scan)*	Time to live programmable from 1000 to 60000 ms	16	64	Y	64 Data Items per Data Set	32

* Launch speed is measured by comparing the time stamp in SOE of digital remote output status change to the time stamp of message seen on the network by a computer who's clock is synchronized by an IRIG-B card to the same IRIG-B source as the relay.

13.6.2 COMMUNICATIONS STATUS SETTINGS

REMOTE INPUTS

Path:*Status* > *Communications* > *Remote Inputs*

The present state of the 32 remote inputs are shown here. The state displayed is the remote point unless the remote device has been established to be Offline in which case the value shown is the programmed default state for the remote input.

GGIO1 INDICATIONS

Path:*Status* > *Communications* > *GGIO1 Indications*

The present state of the 32 GGIO1 Indications are shown here. There are up to 32 GGIO indications that can be used to map any FlexLogic operand into the IED 61850 information model. Default value is "Off".

GOOSE STATUS

Path: ***Status* > *Communications* > *GOOSE Status***

Range: OFF, ON

Default: OFF

This setting indicates GOOSE communications are being received. A ***GOOSE STATUS*** of "ON" indicates successful receipt of the last GOOSE packet. A ***GOOSE STATUS*** of "OFF" indicates the communications link has failed, with the speed this setting changes determined by the Update Time setting configured under GOOSE Transmission.

GOOSE HEADER

Path:***Status* > *Communications* > *GOOSE HDR Status***

Range: OFF, ON

Default: OFF

This setting validates the GOOSE packet structure. A ***GOOSE HEADER STATUS*** of “ON” indicates that the structure of the last GOOSE packet was valid.

GOOSE ANALOG

Path:***Status*** > ***Communications*** > ***GOOSE Analog AV***

FLOAT 1 to 24

Range:

Default: 0.0

SINT32 1 to 8

Range:

Default: 0

IEC 61850 STATUS

Path:***Status*** > ***Communications*** > ***IEC 61850 Status***

COMMS NOT VALIDATED OK

Range: NO, YES

Default: NO

COMMS NOT VALIDATED DONE

Range: YES, NO

Default: YES

COMMS VALIDATED OK

Range: YES, NO

Default: YES

COMMS VALIDATED DONE

Range: YES, NO

Default: YES

MAIN NOT VALIDATED OK

Range: NO, YES

Default: NO

MAIN NOT VALIDATED DONE

Range: YES, NO

Default: YES

MAIN VALIDATED OK

Range: YES, NO

Default: YES

MAIN VALIDATED DONE

Range: YES, NO

Default: YES

NOT RUNNING.ERROR CID

Range: NO, YES

Default: NO

RUNNING.DEFAULT CID

Range: NO, YES

Default: NO

RUNNING.SAVING CID TO FLASH

Range: NO, YES

Default: NO

CID HANDLING DONE

Range: YES, NO

Default: YES

NUMBER OF CONNECTED CLIENTS

Default: 0

CLIENT 1(8) IP ADDRESS

Range: 0, 0XFFFFFFFF

Default: 0

ACTIVITY STATUS

The communication state for each enabled communication type is shown by its value. The main CPU and Comms software sets/resets the active bits for all enabled communication types. The communication state bits are not latched.

Path:***Status*** > ***Communications*** > ***Activity Status***

SERIAL MODBUS

Range: NONE, ACTIVE

Default: NONE

ETHERNET MODBUS

Range: NONE, ACTIVE

Default: NONE

> *Note:*
> *The **MODBUS ACTIVITY TIMEOUT** specifies the minimum time without Modbus communication. This timeout is used to declare the Modbus 'Loss of Communication' state. The **MODBUS ACTIVITY TIMEOUT** must be set to a value other than 0 for the Serial Modbus and Ethernet Modbus Activity Status to work properly.*

> *Note:*
> ***MODBUS ACTIVITY TIMEOUT** is set under:**Setpoints** > **Device** > **Communications** > **Modbus Protocol***

CONNECTIONS

Path:***Status*** > ***Communications*** > ***Connections***

MMS TCP - Maximum

Range: 0 to 99 in steps of 1

Default: 0

MMS TCP - Remaining

Range: 0 to 99 in steps of 1

Default: 0

Modbus TCP - Maximum

Range: 0 to 99 in steps of 1

Default: 0

Modbus TCP - Remaining

Range: 0 to 99 in steps of 1

Default: 0

DNP TCP - Maximum

Range: 0 to 99 in steps of 1

Default: 0

DNP TCP - Remaining

Range: 0 to 99 in steps of 1

Default: 0

IEC - 104 - Maximum

Range: 0 to 99 in steps of 1

Default: 0

IEC - 104 - Remaining

Range: 0 to 99 in steps of 1

Default: 0

OPC - UA - Maximum

Range: 0 to 99 in steps of 1

Default: 0

OPC - UA - Remaining

Range: 0 to 99 in steps of 1

Default: 0

SFTP - Maximum

Range: 0 to 99 in steps of 1

Default: 0

SFTP - Remaining

Range: 0 to 99 in steps of 1

Default: 0

13.7 OTHER STATUS SETTINGS

Switches

Path: Status > Switches

SWITCH 1(X)

Range: Not Configured, Opened, Closed, Intermittent, Discrepancy

Default: Not Configured

Last Trip Data

There is no Enabling/Disabling of this feature. It is always ON.

Path: Status > Last Trip Data

CAUSE

Range: Off, Any FlexLogic Operand

Default: No trip to Date

EVENT

Range: 0 to 4294967295 in steps of 1

Default: 0

DATE

Range: MM/DD/YYYY HH:MM

Default: 01/01/08 00:00:00

PARAMETER 1 to 64

Range: -2147483648 to 2147483647 in steps of 1

Default: 0

Arc Flash

Path: Status > Arc Flash > Arc Flash 1

The status value shows the state of the given Flex operand related to Arc Flash protection.

Light 1(4) PKP

Range: ON, OFF

HS Phase IOC PKP A/B/C

Range: ON, OFF

HS Ground IOC PKP

Range: ON, OFF

Arc Flash OP

Range: ON, OFF

Contact Inputs

Path: Status > Contact Inputs

The status of the Contact Inputs is shown here (see device menu via the menu path). The Off/On display indicates the logic state of the Contact Input.

Output Relays

Path: Status > Output Relays

The status of all output relays is shown here, see above. In the Parameter column, the value indicates the label on the output terminal. The Value column indicates the present ON or OFF state of the output relay.

Virtual Inputs

Path: Status > Virtual Inputs 1(X)

The state of all virtual inputs is shown here, see next figure. The value for each Virtual Input is shown on the control panel graphically as a toggle switch in either the On (|) state or the Off (O) state.

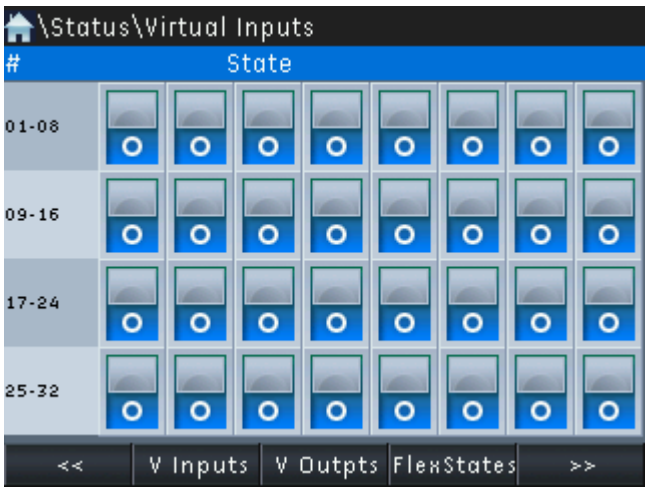

Figure 228: Status of Virtual Inputs, HMI

PARAMETER	VALUE
Virtual Input 1 ()	Off
Virtual Input 2 ()	Off
Virtual Input 3 ()	Off
Virtual Input 4 ()	Off
Virtual Input 5 ()	Off
Virtual Input 6 ()	Off
Virtual Input 7 ()	Off
Virtual Input 8 ()	Off
Virtual Input 9 ()	Off

Figure 229: Status of Virtual Inputs, EnerVista D&I Setup software

Virtual Outputs

Path: ***Status*** > ***Virtual Outputs***

The state of all virtual outputs is shown here, see next figure. The value for each Virtual Output is shown on the control panel graphically as a toggle switch in either the On (|) state or the Off (O) state.

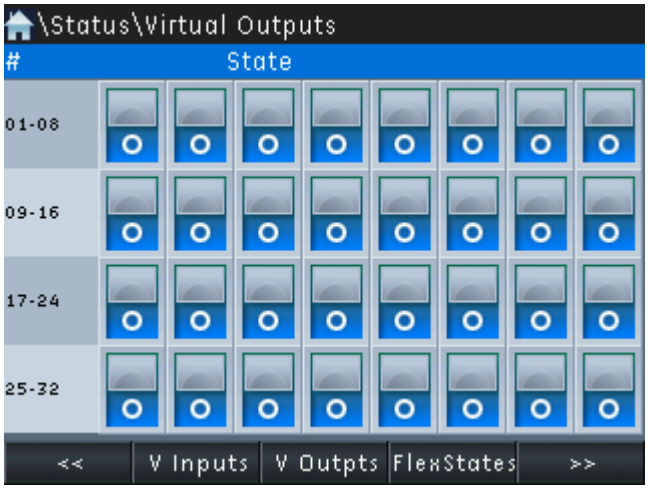

Figure 230: Status of Virtual Outputs, HMI

PARAMETER	VALUE
Virtual Output 1 ()	Off
Virtual Output 2 ()	Off
Virtual Output 3 ()	Off
Virtual Output 4 ()	Off
Virtual Output 5 ()	Off
Virtual Output 6 ()	Off
Virtual Output 7 ()	Off
Virtual Output 8 ()	Off

Figure 231: Status of Virtual Outputs, EnerVista D&I Setup software

Flex State

Path: Status > Flex States

There are 256 Flex state bits available. The status value indicates the state of the given Flex state bit.

Device Status

The general status of system components is displayed here.

Path: Status > Device Status

RUNNING, SAVING CID to FLASH

Range: YES, NO

Default: NO

CID HANDLING DONE

Range: YES, NO

Default: YES

SELF-TEST FAULT

Range: YES, NO

Default: NO

MAINTENANCE

Range: YES, NO

Default: NO

IN SERVICE

Range: YES, NO

Default: YES

PICKUP STATE

Range: YES, NO

Default: YES

BREAKER X CONNECTED

Range: YES, NO

Default: YES

BREAKER X CLOSED

Range: YES, NO

Default: NO

BREAKER X TRIPPED

Range: YES, NO

Default: NO

ALARM

Range: YES, NO

Default: NO

TRIP

Range: YES, NO

Default: NO

ACTIVE GROUP

Range: SP Group 1-6 Active

Default: SP Group 1 Active

Clock Status

Path: Status > Clock

SYSTEM CLOCK

Range: MMM DD YY HH:MM:SS

RTC SYNC SOURCE

Range: None, Port 4 PTP Clock, Port 5 PTP Clock, IRIG-B, SNTP Server 1, SNTP Server 2

The RTC SYNC SOURCE actual value is the time synchronizing source the relay is using at present.

PTP Status

The present values of the PTP protocol are displayed here.

Path:Status > PTP

Grandmaster ID is the grandmaster Identity code being received from the present PTP grandmaster, if any. When the relay is not using any PTP grandmaster, this actual value is zero. The grandmaster Identity code is specified by PTP to be globally unique, so one can always know which clock is grandmaster in a system with multiple grandmaster-capable clocks.

RTC Accuracy is the estimated maximum time difference at present in the Real Time Clock (RTC), considering the quality information imbedded in the received time signal, how long the relay has had to lock to the time source, and in the case of time signal interruptions, the length of the interruption. The value 999,999,999 indicates that the magnitude of the estimated difference is one second or more, or that the difference cannot be estimated.

Port 4 (5) PTP State is the present state of the port's PTP clock. The PTP clock state is:

- DISABLED: If the port's function setting is Disabled
- NO SIGNAL: If enabled but no signal from an active master has been found and selected
- CALIBRATING: If an active master has been selected but lock is not at present established
- SYNCH'D (NO PDELAY): If the port is synchronized, but the peer delay mechanism is non-operational
- SYNCHRONIZED: If the port is synchronized

HMI Display

The HMI Display menu option opens a virtual HMI Display window within the EnerVista D&I Setup software. The virtual HMI display provides front panel access to the relay with clickable buttons and realtime display of the front panel, including navigation and viewing relay settings, screens, and LEDs.

Path:Status > HMI Display

> *Note:*
> *The HMI Display functionality is not available with the Advanced Cybersecurity option*

CHAPTER 14

METERING

14.1 CHAPTER OVERVIEW

This chapter provides some information about the device maintenance.

This chapter contains the following sections:

Chapter Overview	576
Metering Overview	577
Metering Summary	580
Generator functions	581
Impedance/admittance	584
Currents	585
Voltages	587
Frequency	590
Harmonics	592
Synchrocheck	593
Power functions	594
Energy	598
Demand	601
Power Demand	602
Arc Flash	603
Resistance Temperature Detectors	604
Analog Inputs	605
FlexElements	606

14.2 METERING OVERVIEW

All phasors calculated by 8 Series relays and used for protection, control and metering functions are rotating phasors, that maintain the correct phase angle relationships with each other at all times.

For display and oscillography purposes, all phasor angles in a given relay are referred to an AC input channel pre-selected as the phase A voltage. If there is no voltage input, the phase A current is used for angle reference. The phase angle of the reference signal always display zero degrees and all other phase angles are relative to this signal. If the preselected reference signal is not measurable at a given time, the phase angles are not referenced.

The phase angles are always presented as negative values in the lagging direction as illustrated in the following.

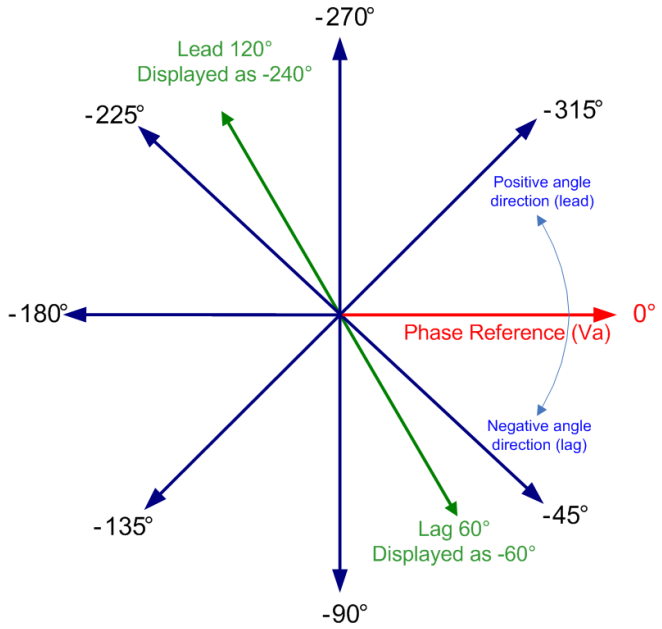

Figure 232: Phase Angle Measurement 8 Series Convention

The relay measures all RMS (root mean square) currents and voltages, frequency, and all auxiliary analog inputs. Other values like neutral current, phasor symmetrical components, power factor, power (real, reactive, apparent), are derived. A majority of these quantities are recalculated every protection pass and perform protection and monitoring functions. Displayed metered quantities are updated approximately three (3) times a second for readability. All phasors and symmetrical components are referenced to the A-N voltage phasor for wye-connected VTs; to the A-B voltage phasor for delta-connected VTs; or to the phase A current phasor when no voltage signals are present.

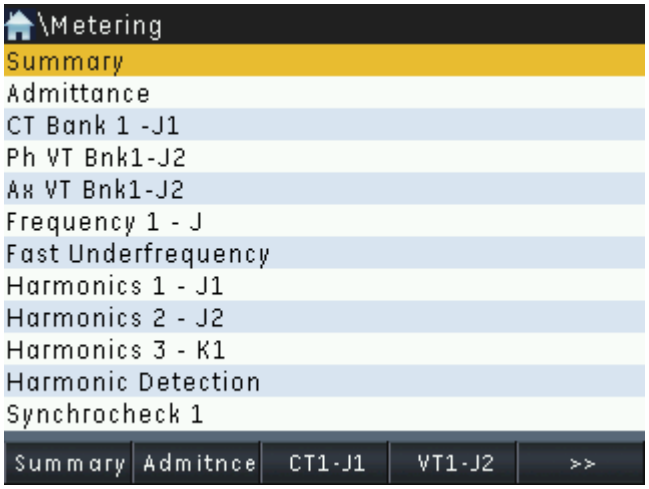

Figure 233: An example of the Metering menu (not representative of all models)

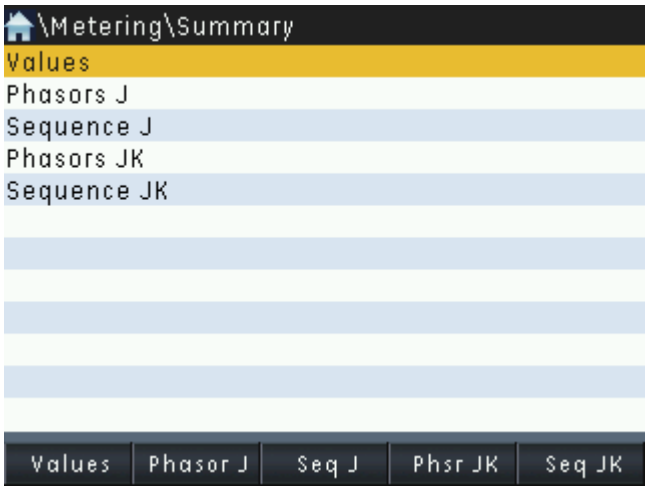

Figure 234: An example of the Metering Summary submenu

All the measured values can be viewed on the front panel display or monitored by remote devices through the communication system. An example of the HMI display showing actual currents is shown here.

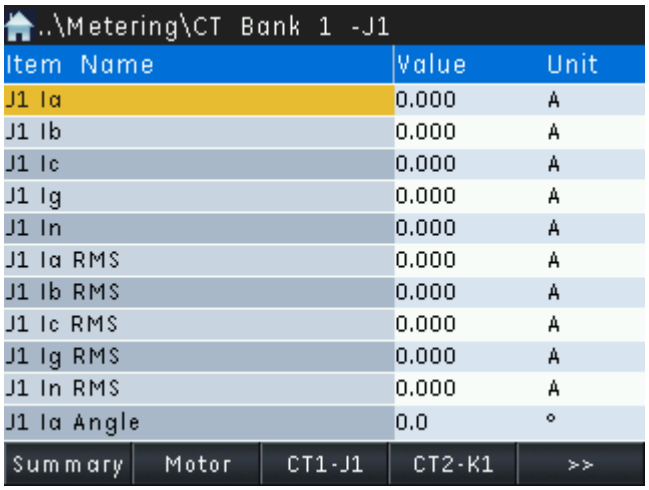

Figure 235: An example of HMI display showing actual currents

The measured values can also be displayed in the PC (EnerVista D&I Setup software). An example follows.

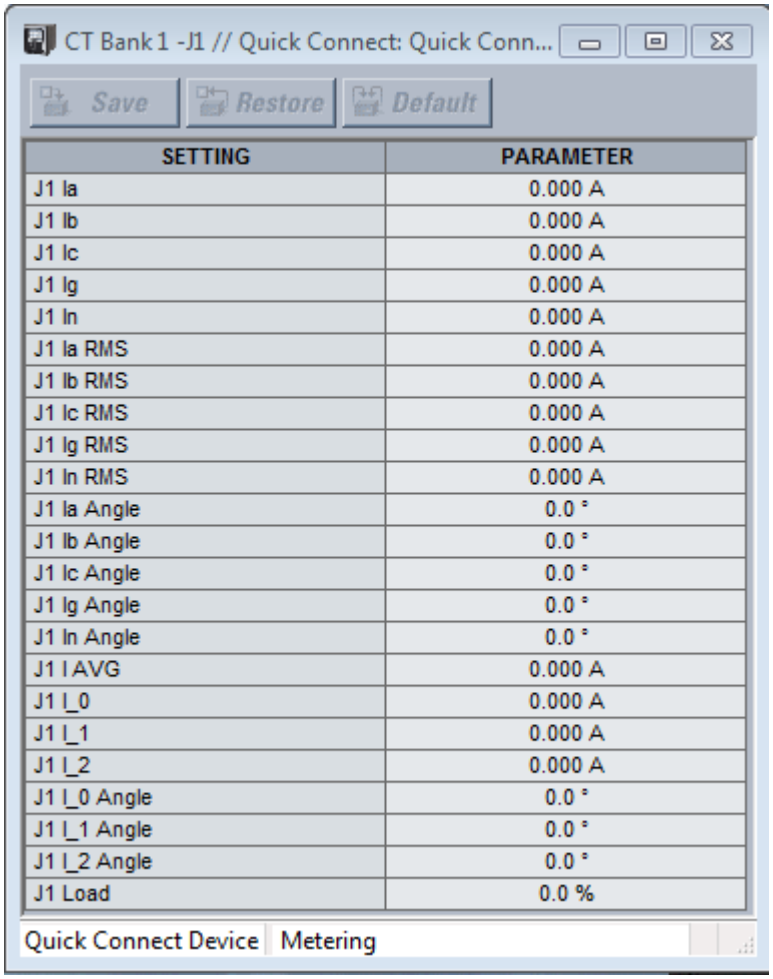

SETTING	PARAMETER
J1 Ia	0.000 A
J1 Ib	0.000 A
J1 Ic	0.000 A
J1 Ig	0.000 A
J1 In	0.000 A
J1 Ia RMS	0.000 A
J1 Ib RMS	0.000 A
J1 Ic RMS	0.000 A
J1 Ig RMS	0.000 A
J1 In RMS	0.000 A
J1 Ia Angle	0.0 °
J1 Ib Angle	0.0 °
J1 Ic Angle	0.0 °
J1 Ig Angle	0.0 °
J1 In Angle	0.0 °
J1 I AVG	0.000 A
J1 I_0	0.000 A
J1 I_1	0.000 A
J1 I_2	0.000 A
J1 I_0 Angle	0.0 °
J1 I_1 Angle	0.0 °
J1 I_2 Angle	0.0 °
J1 Load	0.0 %

Figure 236: Current Metering Screen

The complete list of actual values available in the Metering menu is covered in the following sections.

14.3 METERING SUMMARY

Path: ***Metering*** > ***Summary***

The Metering Summary menu consists of three display screens, including a graphical presentation of key phasor quantities as shown below:

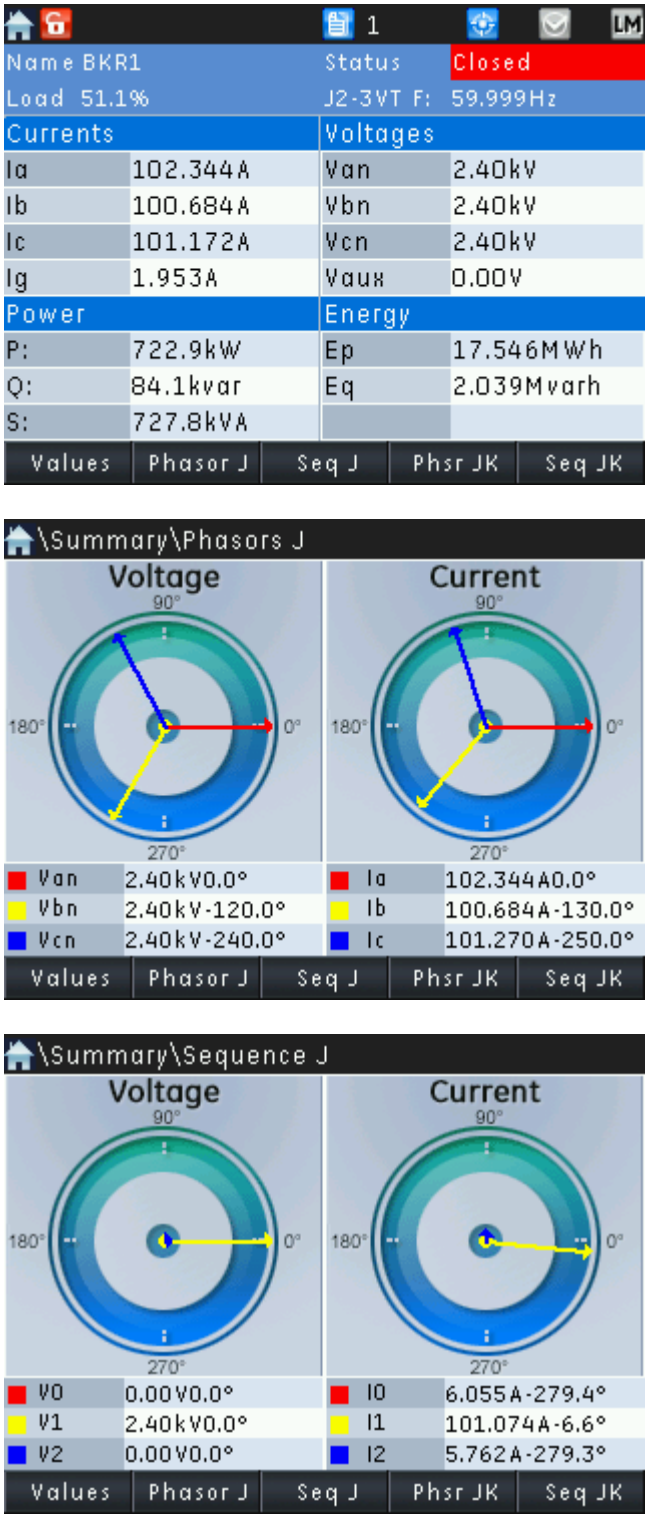

Figure 237: Metering summary screens

14.4 GENERATOR FUNCTIONS

14.4.1 PERCENT DIFFERENTIAL CURRENT

Path: ***Metering*** > ***Generator*** > ***Percent Differential***

The phasors of differential and restraint currents are displayed in primary amperes.

Phase A differential (Ia Diff)

Range: 0.000 to 120000.000 A

Phase B differential (Ib Diff)

Range: 0.000 to 120000.000 A

Phase C differential (Ic Diff)

Range: 0.000 to 120000.000 A

Phase A restraint (Ia Restr)

Range: 0.000 to 120000.000 A

Phase B restraint (Ib Restr)

Range: 0.000 to 120000.000 A

Phase C restraint (Ic Restr)

Range: 0.000 to 120000.000 A

14.4.2 OVERALL DIFFERENTIAL CURRENT

Path: ***Metering*** > ***Generator*** > ***Overall Differential***

Ia Overall Differential (Ia Ovrl Diff)

Range: 0.000 to 1000.000 x CT in steps of 0.001

Ib Overall Differential (Ib Ovrl Diff)

Range: 0.000 to 1000.000 x CT in steps of 0.001

Ic Overall Differential (Ic Ovrl Diff)

Range: 0.000 to 1000.000 x CT in steps of 0.001

Ia Overall Restraint (Ia Ovrl Restr)

Range: 0.000 to 1000.000 x CT in steps of 0.001

Ib Overall Restraint (Ib Ovrl Restr)

Range: 0.000 to 1000.000 x CT in steps of 0.001

Ic Overall Restraint (Ic Ovrl Restr)

Range: 0.000 to 1000.000 x CT in steps of 0.001

Ia Differential 2nd Harmonic (Ia Diff 2nd Harm)

Range: 0.0 to 100.0% in steps of 0.1

Ib Differential 2nd Harmonic (Ib Diff 2nd Harm)

Range: 0.0 to 100.0% in steps of 0.1

Ic Differential 2nd Harmonic (Ic Diff 2nd Harm)

Range: 0.0 to 100.0% in steps of 0.1

Ia Differential 5th Harmonic (Ia Diff 5th Harm)

Range: 0.0 to 100.0% in steps of 0.1

Ib Differential 5th Harmonic (Ib Diff 5th Harm)

Range: 0.0 to 100.0% in steps of 0.1

Ic Differential 5th Harmonic (Ic Diff 5th Harm)

Range: 0.0 to 100.0% in steps of 0.1

> *Note:*
> *The values for differential and restraint currents are displayed in per times CT. The CT primary, from the K2 CT Bank assigned as Signal Input for Winding 1, is the reference CT (base CT) used for estimating the differential and restraint currents. The winding reference is explained in the Transformer Setup section.*

14.4.3 SPEED

Path: ***Metering*** > ***Generator*** > ***Speed***

SPEED

Range: 0 to 8640 RPM in steps of 1

Default: 0

14.4.4 FREQUENCY OOB ACCUMULATION

The Frequency Out-Of-Band (OOB) Accumulation feature provides diagnostic information and alarms based on the accumulated off-nominal (out-of-band) frequency operation time of a turbine over several frequency bands. Details of the feature settings can be found under **Path**: ***Setpoints*** > ***Monitoring*** > ***Generator*** > ***Frequency OOB Accumulation*** > ***General***

> *Note:*
> *The following screen is only displayed if **Setpoints \ Monitoring \Generator \ Freq OOB Accum \ Accum 1 \ Function** is not disabled.*

Path: ***Setpoints*** > ***Metering*** > ***Generator*** > ***Frequency OOB Accumulation***

FREQ OOB 1(7) ACCUM

Range: 0 to 100 % in steps of 0.1 %

For configured accumulators, this value displays to the nearest 0.1% the ratio of present accumulation to the TIME LIMIT set for the accumulator.

14.4.5 STATOR GROUND 3RD HARMONIC

Path: Metering > Generator > Stat Gnd 3rd Harm

3rd Harm VN in Sec

Range: 0.00 to 99.99 V in steps of 0.01 V

Default: 0.00 V

This value represents the magnitude of the 3rd harmonic component of neutral voltage connected via an auxiliary voltage channel of the relay Ax VT Bnk1-J2 bank input.

3rd Harm VO in Sec

Range: 0.00 to 99.99 V in steps of 0.01 V

Default: 0.00 V

This value represents the magnitude of the 3rd harmonic in the zero-sequence voltage at the generator output terminals.

3rd Harm VN+V0 in Sec

Range: 0.00 to 99.99 V in steps of 0.01 V

Default: 0.00 V

This value represents the vectorial sum of the secondary voltage quantities ***3rd Harm VN in Sec*** and ***3rd Harm V0 in Sec.***

Note:
*Metering value 3`rd Harm VN+V0 in Sec` is only available if **Setpoints>Protection>Group x >Generator > 3rd Harm Voltage Difference** trip or alarm functions are not disabled.*

14.5 IMPEDANCE/ADMITTANCE

14.5.1 POSITIVE SEQUENCE IMPEDANCE

The positive sequence impedance is shown here. The ohm values are presented in secondary ohms. Positive sequence impedance 1 is calculated using 3-phase J1 Currents and 3-phase J2 Voltages. Positive sequence impedance 2 is calculated using 3-phase K1 Currents and 3-phase J2 Voltages.

Path: Metering > Impedance > Positive Impedance x

Z1 Resistance

Range: 0.00 to 6553.50 ohms in steps of 0.01

Z1 Reactance

Range: 0.00 to 6553.50 ohms in steps of 0.01

Z1 Magnitude

Range: 0.00 to 6553.50 ohms in steps of 0.01

Z1 Angle

Range: -359.9° to 359.9° in steps of 0.1

14.6 CURRENTS

Note:
The number of Currents supported is order code dependent.

The CT bank names shown are set in the CT Bank Name setpoints under ***Setpoints*** > ***System*** > ***Current Sensing*** > ***CT Bank X***.

Note:
Below is a complete list of quantities. The quantities visible to you will depend on the model and order code

Path: ***Metering*** > ***CT Bank 1-J1 (CT Bank 2-K1) (CT Bank 3-K2) (CT Bank 4-JK)***

Phase A/B/C (Ia/Ib/Ic) 0.000 A

Range: 0.000 to 12000.000 A

Ground (Ig)

Range: 0.000 to 12000.000 A

Sensitive Ground (Isg)

Range: 0.000 to 1200.000 A

Neutral (In)

Range: 0.000 to 12000.000 A

Phase A/B/C (Ia/Ib/Ic RMS)

Range: 0.000 to 12000.000 A

Ground (Ig RMS)

Range: 0.000 to 12000.000 A

Sensitive Ground (Isg RMS)

Range: 0.000 to 1200.000 A

Neutral (In RMS)

Range: 0.000 to 12000.000 A

Phase A/B/C Angle (Ia/Ib/Ic Angle)

Range: 0.0 to 359.9°

Ground Angle (Ig Angle)

Range: 0.0 to 359.9°

Sensitive Ground Angle (Isg Angle)

Range: 0.0 to 359.9°

Neutral Angle (In Angle)

Range: 0.0 to 359.9°

Average (I AVG)

Range: 0.000 to 12000.000 A

Zero Sequence (I_0)

Range: 0.000 to 12000.000 A

Positive Sequence (I_1)

Range: 0.000 to 12000.000 A

Negative Sequence (I_2)

Range: 0.000 to 12000.000 A

Zero Sequence (I_0 Angle)

Range: 0.0 to 359.9°

Positive Sequence Angle (I_1 Angle)

Range: 0.0 to 359.9°

Negative Sequence Angle (I_2 Angle)

Range: 0.0 to 359.9°

Ground Differential (Igd)

Range: 0.000 to 12000.000 A

Ground Differential Angle (Igd Angle)

Range: 0.0 to 359.9°

Load (I%) (not applicable to all models)

Range: 0.0 to 100.0%

> *Note:*
> *Percent of load-to-trip is calculated from the phase with the highest current reading. This metered value is the ratio between the highest phase current injected for the current bank, and the lowest pickup setting among all Phase Timed and Instantaneous overcurrent elements. If all these elements are disabled, the value displayed is* `0`*.*

> *Note:*
> *For example, if the lowest pickup is 0.5 xCT, and the highest injected phase current is 1 xCT, the displayed value for load-to-trip is 200%.*

14.7 VOLTAGES

Note:
The number of Voltages supported is order code dependent.

Note:
The VT bank names shown are set in the Phase VT Bank Name setpoints under ***Setpoints*** > ***System*** > ***Voltage Sensing*** > ***VT****.*

Note:
Below is a complete list of quantities. The quantities visible to you will depend on the model and order code

Path: ***Metering*** > ***VT Bank*** > ***Ph VT Bnk1-J2 (Ph VT Bnk2-K2)***

Phase A (Van)

Range: 0.00 to 600000.00 V

Phase B (Vbn)

Range: 0.00 to 600000.00 V

Phase C (Vcn)

Range: 0.00 to 600000.00 V

Phase to Phase AB (Vab)

Range: 0.00 to 600000.00 V

Phase to Phase BC (Vbc)

Range: 0.00 to 600000.00 V

Phase to Phase CA (Vca)

Range: 0.00 to 600000.00 V

Neutral (Vn)

Range: 0.00 to 600000.00 V

Phase A (Van RMS)

Range: 0.00 to 600000.00 V

Phase B (Vbn RMS)

Range: 0.00 to 600000.00 V

Phase C (Vcn RMS)

Range: 0.00 to 600000.00 V

Phase to Phase AB (Vab RMS)

Range: 0.00 to 600000.00 V

Phase to Phase BC (Vbc RMS)

Range: 0.00 to 600000.00 V

Phase to Phase CA (Vca RMS)

Range: 0.00 to 600000.00 V

Neutral (Vn RMS)

Range: 0.00 to 600000.00 V

Phase A Angle (Van Angle)

Range: 0.0 to 359.9°

Phase B Angle (Vbn Angle)

Range: 0.0 to 359.9°

Phase C Angle (Vcn Angle)

Range: 0.0 to 359.9°

Phase to Phase AB Angle (Vab Angle)

Range: 0.0 to 359.9°

Phase to Phase BC Angle (Vbc Angle)

Range: 0.0 to 359.9°

Phase to Phase CA Angle (Vca Angle)

Range: 0.0 to 359.9°

Neutral Angle (Vn Angle)

Range: 0.0 to 359.9°

Average Phase to Phase (V AVG L-L)

R*ange: 0.00 to 600000.00 V*

Average Phase (V AVG L-N)

Range: 0.00 to 600000.00 V

Zero Sequence (V0)

Range: 0.00 to 600000.00 V

Positive Sequence (V1)

Range: 0.00 to 600000.00 V

Negative Sequence (V2)

Range: 0.00 to 600000.00 V

Zero Sequence Angle (V0 Angle)

Range: 0.0 to 359.9°

Positive Sequence Angle (V1 Angle)

Range: 0.0 to 359.9°

Negative Sequence Angle (V2 Angle)

Range: 0.0 to 359.9°

Path: ***Metering*** > ***Aux VT Bank*** > ***Ax VT Bnk1-J2 (Ax VT Bnk2-K2)***

Auxilary Voltage (Vaux)

Range: 0.00 to 600000.00 V

Auxilary Voltage RMS (Vaux RMS)

Range: 0.00 to 600000.00 V

Auxilary Voltage Angle (Vaux Angle)

Range: 0.0 to 359.9°

14.8 FREQUENCY

Note:
Below is a complete list of quantities. The quantities visible to you will depend on the model and order code

Path: ***Metering*** > ***Frequency 1 - J***

Frequency (Current Input J1-CT)

Range: 2.000 to 90.000 Hz

CT Frequency

Range: 20 to 100 Hz

CT Frequency Rate of Change

Range: -20.00 to 20.00 Hz/s

Frequency Rate of Change (Current Input J1-CT)

Range: -20.00 to 20.00 Hz/s

Frequency (Phase Voltage Input J2-3VT)

Range: 2.000 to 90.000 Hz

3 VT Frequency

Range: 20 to 100 Hz

3 VT Frequency Rate of Change

Range: -20.00 to 20.00 Hz/s

Frequency Rate of Change (Phase Voltage Input J2-3VT)

Range: -20.00 to 20.00 Hz/s

Frequency (Auxiliary Voltage Input J2-Vx)

Range: 2.000 to 90.000 Hz

Frequency Rate of Change (Auxiliary Voltage Input J2-Vx)

Range: -20.00 to 20.00 Hz/s

Frequency (Phase Voltage Input LEA1)

Range: 2.000 to 90.000 Hz

Frequency Rate of Change (Phase Voltage Input LEA1)

Range: -20.00 to 20.00 Hz/s

Frequency (Phase Voltage Input LEA2)

Range: 2.000 to 90.000 Hz

Frequency Rate of Change (Phase Voltage Input LEA2)

Range: -20.00 to 20.00 Hz/s

14.8.1 VOLTS PER HERTZ

Path: ***Metering*** > ***Volts per Hertz***

VOLTS PER HERTZ 1 (2)

Range: 0.00 to 4.00 V/Hz in steps of 0.01

Default: 0.00 V/Hz

14.9 HARMONICS

> *Note:*
> *The number of Harmonics supported is dependent on the model and the order code.*

All values relate to phase currents measured on the input cards (J1, etc.).

Path: ***Metering*** > ***Harmonics 1 - J1***

Phase A/B/C Total Harmonic Distortion (Phase A/B/C THD)

Range: 0.0 to 100.0%

Phase A/B/C Second Harmonic (Phase A/B/C 2)

Range: 0.0 to 100.0%

Phase A/B/C Third Harmonic (Phase A/B/C 3)

Range: 0.0 to 100.0%

...

Phase A/B/C Twenty Fifth Harmonic (Phase A/B/C 25)

Range: 0.0 to 100.0%

14.9.1 HARMONIC DETECTION

The second, third, fourth, and fifth harmonics per phase are shown here. The harmonics values are presented in percent relative to the fundamental magnitude.

It should be noted that the similar harmonic ratios and THD values are also displayed under the general metering menus, **Harmonics 1 - J1 Current**, **Harmonics 3 - K1 Current**, or **Harmonics 4 – K2 Current**, where all values are calculated every three cycles. The THD values used in the Harmonic Detection element are the same to the general metering, so they are not shown here again. The harmonic ratios in the Harmonic Detection element are calculated and updated every protection pass.

Path: ***Metering*** > ***Harmonic Detection***

HD Ph A/B/C 2nd Harm

Range: 0.00 to 100.0%

HD Ph A/B/C 3rd Harm

Range: 0.00 to 100.0%

HD Ph A/B/C 4th Harm

Range: 0.00 to 100.0%

HD Ph A/B/C 5th Harm

Range: 0.00 to 100.0%

14.10 SYNCHROCHECK

Path: ***Metering*** > ***Synchrocheck***

Bus Voltage Magnitude (Bus Volts Magnitude)

Range: 0.00 to 600000.00 V

Bus Voltage Angle (Bus Volts Angle)

Range: 0.0 to 359.9°

Bus Voltage Frequency (Bus Volts Frequency)

Range: 2.000 to 90.000 Hz

Line Voltage Magnitude (Line Volts Magnitude)

Range: 0.00 to 600000.00 V

Line Voltage Angle (Line Volts Angle)

Range: 0.0 to 359.9°

Line Voltage Frequency (Line Volts Frequency)

Range: 2.000 to 90.000 Hz

Voltage Difference (Volts Difference)

Range: 0.00 to 600000.00 V

Voltage Angle Difference (Angle Difference)

Range: 0.0 to 359.9°

Voltage Frequency Difference (Frequency Difference)

Range: 2.000 to 90.000 Hz

14.11 POWER FUNCTIONS

14.11.1 POWER

The following figure illustrates the convention used for measuring power and energy in the 8 Series devices.

Note:
Power 1 is calculated using 3-phase J1 Currents & 3-phase J2 Voltages.

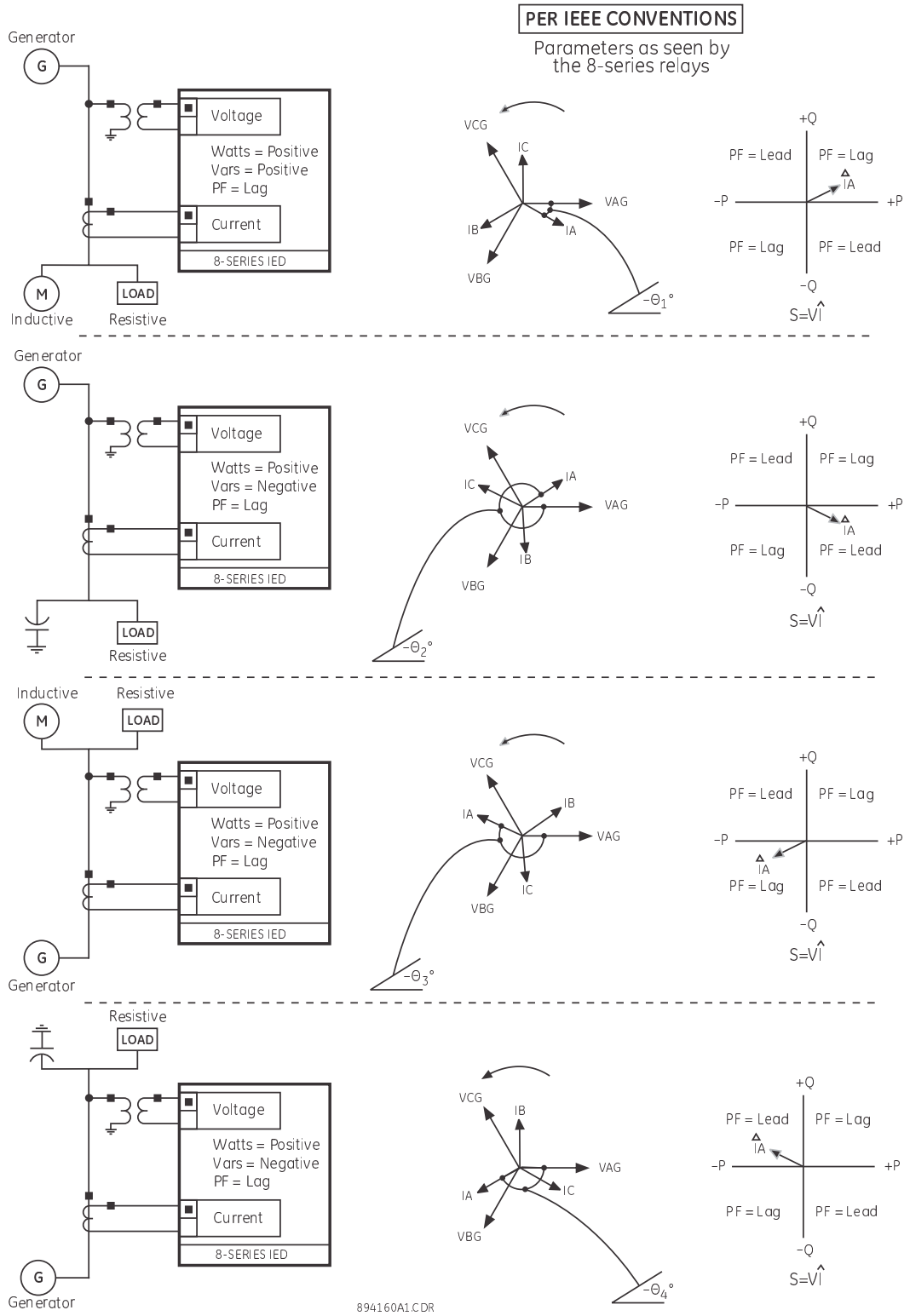

Figure 238: Flow direction of signed values for watts and VARs

Path: ***Metering*** > ***Power 1(X)***

Real Total (Real)

Range: - 214748364.8 kW to 214748364.7 kW

Reactive Total (Reactive)

Range: - 214748364.8 kvar to 214748364.7 kvar

Apparent Total (Apparent)

Range: 0 kVA to 214748364.7 kVA

Phase A Real (Ph A Real)

Range: - 214748364.8 kW to 214748364.7 kW

Phase B Real (Ph B Real)

Range: - 214748364.8 kW to 214748364.7 kW

Phase C Real (Ph C Real)

Range: - 214748364.8 kW to 214748364.7 kW

Phase A Reactive (Ph A Reactive)

Range: - 214748364.8 kvar to 214748364.7 kvar

Phase B Reactive (Ph B Reactive)

Range: - 214748364.8 kvar to 214748364.7 kvar

Phase C Reactive (Ph C Reactive)

Range: - 214748364.8 kvar to 214748364.7 kvar

Phase A Apparent (Ph A Apparent)

Range: 0 kVA to 214748364.7 kVA

Phase B Apparent (Ph B Apparent)

Range: 0 kVA to 214748364.7 kVA

Phase C Apparent (Ph C Apparent)

Range: 0 kVA to 214748364.7 kVA

Power Factor Total (PF)

Range: 0.01 Lag to 1.00 to 0.01 Lead

Phase A Power Factor (Ph A PF)

Range: 0.01 Lag to 1.00 to 0.01 Lead

Phase B Power Factor (Ph B PF)

Range: 0.01 Lag to 1.00 to 0.01 Lead

Phase C Power Factor (Ph C PF)

Range: 0.01 Lag to 1.00 to 0.01 Lead

14.11.2 POWER FACTOR

Path: ***Metering*** > ***Power Factor***

The power factor value input to the power factor element(s) is displayed here. Note that the value may not be equal to the power factor value displayed under ***Metering*** > ***Power 1*** since the supervision conditions are applied in the element.

POWER FACTOR 1(X)

Range: -0.99 to 1.00 in steps of 0.01

Default: 0.00

14.11.3 DIRECTIONAL POWER

Path: ***Metering*** > ***Directional Power***

The effective operating quantities of the sensitive directional power elements are displayed here. The display may be useful to calibrate the feature by compensating the angular errors of the CTs and VTs with the use of the ***RCA*** and ***CALIBRATION*** settings.

Directional Power 1

Range: -214748364.8 kW to 214748364.7 kW

Default: 0.0 kW

...

Directional Power X

Range: -214748364.8 kW to 214748364.7 kW

Default: 0.0 kW

14.12 ENERGY

14.12.1 ENERGY (X)

Note:
Below is a complete list of quantities. The quantities visible to you will depend on the model and order code.

Path: ***Metering*** > ***Energy*** > ***Energy 1(X)***

Reset Energy D/T

Range: MM/DD/YY HH:MM:SS

Positive Watt Hours (Pos WattHours)

Range: 0.000 MWh to 4294967.295 MWh

Pos WattHours Cost

D*efault: 0.00 $ to 42949672.95 $*

Negative Watt Hours (Neg WattHours)

Range: 0.000 MWh to 4294967.295 MWh

Neg WattHours Cost

Default: 0.00 $ to 42949672.95 $

Positive Var Hours (Pos VarHours)

Range: 0.000 Mvarh to 4294967.295 Mvarh

Negative Var Hours (Neg VarHours)

Range: 0.000 Mvarh to 4294967.295 Mvarh

14.12.2 ENERGY LOG

Path: ***Metering*** > ***Energy 1*** > ***Energy Log***

Pwr1 Last Event Pos WattHours

Range: 0.000 to 4294967.295 MWh in steps of 0.001 MWh

Default: 0.000 MWh

This is the logged value of Pos WattHours energy accumulated during the last event or shift interval. The shift interval refers to the time between the last two reset commands, where the reset command refers to the rising edge of the FlexLogic operand set under setpoint Reset Event Energy (***Power Systems*** > ***Power Sensing***). An application example is the monitoring of the total energy accumulated at the end of an event or a shift interval. An event/shift interval can be defined by the breaker status operand (open or closed).

Pwr1 Last Event Neg WattHours

Range: 0.000 to 4294967.295 MWh in steps of 0.001 MWh

Default: 0.000 MWh

This value shows the logged value of Neg WattHours energy accumulated during the last event or shift interval.

Pwr1 Last Event Pos VarHours

Range: 0.000 to 4294967.295 Mvarh in steps of 0.001 Mvarh

Default: 0.000 Mvarh

This value shows the logged value of Pos VarHours energy accumulated during the last event or shift interval.

Pwr1 Last Event Neg VarHours

Range: 0.000 to 4294967.295 Mvarh in steps of 0.001 Mvarh

Default: 0.000 Mvarh

This value shows the logged value of Neg VarHours energy accumulated during the last event or shift interval.

Pwr1 Today Pos WattHours

Range: 0.000 to 4294967.295 MWh in steps of 0.001 MWh

Default: 0.000 MWh

This value shows the current value of Pos WattHours energy accumulated since the start of the day, that is time 00:00 (midnight). At the end of the day this value resets to zero and the total accumulated energy value is logged as Yesterday Pos WattHours.

Pwr1 Today Neg WattHours

Range: 0.000 to 4294967.295 MWh in steps of 0.001 MWh

Default: 0.000 MWh

This value shows the current value of Neg WattHours energy accumulated since the start of the day.

Pwr1 Today Pos VarHours

Range: 0.000 to 4294967.295 Mvarh in steps of 0.001 Mvarh

Default: 0.000 Mvarh

This value shows the current value of Pos VarHours energy accumulated since the start of the day.

Pwr1 Today Neg VarHours

Range: 0.000 to 4294967.295 MWh in steps of 0.001 MWh

Default: 0.000 MWh

This value shows the current value of Neg VarHours energy accumulated since the start of the day.

Pwr1 Yesterday Pos WattHours

Range: 0.000 to 4294967.295 MWh in steps of 0.001 MWh

Default: 0.000 MWh

This value shows the current value of Pos WattHours energy accumulated during the previous day. This value is logged at the end of the day, midnight, or 23:59 hrs.

Pwr1 Yesterday Neg WattHours

Range: 0.000 to 4294967.295 MWh in steps of 0.001 MWh

Default: 0.000 MWh

This value shows the current value of Neg WattHours energy accumulated during the previous day.

Pwr1 Yesterday Pos VarHours

Range: 0.000 to 4294967.295 Mvarh in steps of 0.001 Mvarh

Default: 0.000 Mvarh

This value shows the current value of Pos VarHours energy accumulated during the previous day.

Pwr1 Yesterday Neg VarHours

Range: 0.000 to 4294967.295 MWh in steps of 0.001 MWh

Default: 0.000 MWh

This value shows the current value of Neg VarHours energy accumulated during the previous day.

Note:
All Energy Log values can be reset to zero using the command Energy Log Data under ***Records*** > ***Clear Records*** *or by the Flexlogic operand programmed by the setpoint* ***ENERGY LOG DATA*** *under* ***Device*** > ***Clear Records****. The Reset Energy Log D/T in either case is recorded and displayed.*

14.13 DEMAND

14.13.1 CURRENT DEMAND

> *Note:*
> *The number of Current Demand supported is Order Code dependent.*

The relay measures Current Demand on each phase, and three phase Demand for real, reactive, and apparent power. These parameters can be monitored to reduce supplier Demand penalties or for statistical metering purposes. Demand calculations are based on the measurement type selected under ***Monitoring*** > ***Functions*** > ***Demand***. For each quantity, the relay displays the Demand over the most recent Demand time interval, the maximum Demand since the last maximum Demand reset, and the time and date stamp of this maximum Demand value. Maximum Demand quantities can be reset to zero at ***Records*** > ***Clear Records*** > ***Max Current Demand***.

14.13.1.1 CURRENT DEMAND 1(X)

Path: ***Metering*** > ***Current Demand 1(X)***

Cur1 Ph A/B/C Demand

Range: 0.000 to 12000.000 A

Cur1 Max Ph A/B/C Demand

Range: 0.000 to 12000.000 A

Cur1 D/T Ph A/B/C Demand MM/DD/YY HH:MM:SS

14.14 POWER DEMAND

For real/reactive/apparent power quantities, the relay displays the Demand values over the most recent time interval. The time interval refers to the time since the last reset.

Power demand quantities can be reset to zero by either of the following methods:

- ***Records*** > ***Clear Records*** command - resets the corresponding demand quantities.
- Using any operand programmed under the setpoint Reset Demand (***Monitoring*** > ***Functions*** > ***Demand***) - resets the max and min demand values
- using any operand programmed under ***Device*** > ***Clear Records*** - resets the max and min demand values.

Note:
If average current drops below 0.02 x CT, calculation of the minimum real/reactive/apparent demand is blocked, and metering remains at the level measured at the time of the block.

Path: ***Metering*** > ***Power Demand x***

RESETR DMD DATE/TIME

Range: MM/DD/YY 00:00:00

REAL DEMAND (REAL DMD)

Range: 0.0 kW to 214748364.7 kW

MAX REAL DMD

Range: 0.0 kW to 214748364.7 kW

DATE/TIME REAL DMD

Range: MM/DD/YY 00:00:00

REACTIVE DEMAND (REACTIVE DMD)

Range: 0.0 kvar to 214748364.7 kvar

MAX REACTIVE DMD

Range: 0.0 kvar to 214748364.7 kvar

D/T REACTIVE DMD

Range: MM/DD/YY 00:00:00

APPARENT DEMAND (APPARENT DMD)

Range: 0.0 kVA to 214748364.7 kVA

MAX APPARENT DMD

Range: 0.0 kVA to 214748364.7 kVA

D/T APPARENT DMD

Range: MM/DD/YY 00:00:00

14.15 ARC FLASH

Path: ***Metering*** > ***Arc Flash*** > ***Arc Flash 1***

HS Phase Current A/B/C

Range: 0.00 to 120000.00 A in steps of 0.01

HS Ground Current

Range: 0.00 to 120000.00 A in steps of 0.01

14.16 RESISTANCE TEMPERATURE DETECTORS

Temperature can be displayed in Celsius or Fahrenheit. The selection is made in ***Setpoints > Device > Installation > Temperature Display***.

Path: Metering > RTDs

RTDx

Range: -40 to 250°C (-40 to 482°F)

Temperatures < -40°C are displayed as `Shorted` and temperatures > 250°C are displayed as `Open RTD`.

Path: Metering > RRTDs

RRTDx

Range: -40 to 250°C

Temperatures < -40°C or temperatures >250°C are displayed as `Trouble RRTD`

Path: Metering > RTD Maximums

Reset RTD Date/Time

Range: DD/MM/YY hh/mm/ss

Maximum RTD values can be cleared (reset) by setting the value of ***Setpoints > Records > Clear Records > RTD Maximums*** to ON. Executing this command loads -40°C (or -40°F) as the initial Maximum RTD value.

RTD x Max

Range: -40 to 250°C (-40 to 482°F)

Temperatures < -40°C are displayed as `Shorted` and temperatures > 250°C are displayed as `Open RTD`.

RTD x Max Date/Time

Range: DD/MM/YY hh/mm/ss

Path: Metering > RRTD Maximums

Reset RRTD Date/Time

Range: DD/MM/YY hh/mm/ss

Maximum RRTD values can be cleared (reset) by setting the value of ***Setpoints > Records > Clear Records > RRTD Maximums*** to ON. Executing this command loads -40°C (or -40°F) as the initial Maximum RRTD value.

RRTD x Max

Range: -40 to 250°C (-40 to 482°F)

Temperatures < -40°C are displayed as `Shorted` and temperatures > 250°C are displayed as `Open RRTD`.

RRTD x Max Date/Time

Range: DD/MM/YY hh/mm/ss

14.17 ANALOG INPUTS

Path: ***Metering*** > ***Analog Inputs***

Analog Ip x

Range: -500000 to 500000 units in steps of 1

14.18 FLEXELEMENTS

Path: ***Metering*** > ***FlexElements***

The operating signals for the FlexElements are displayed in pu values using the definitions of the base units in the *Definitions of the Base Unit for the FLEXELEMENT* table. This table can be found in ***Setpoints*** > ***FlexLogic*** > ***FlexElements***.

FlexElement Operating Signals:

- FlexEl 1 Op Signal
- FlexEl 2 Op Signal
- FlexEl 3 Op Signal
- FlexEl 4 Op Signal
- FlexEl 5 Op Signal
- FlexEl 6 Op Signal
- FlexEl 7 Op Signal
- FlexEl 8 Op Signal

CHAPTER 15

RECORDS

15.1 CHAPTER OVERVIEW

This chapter contains the following sections:

Chapter Overview	608
Events	609
Transient Records	613
Fault Reports	614
Data Logger	616
Breakers	617
Digital Counters	619
Remote Modbus Device	620
Clear Records	623

15.2 EVENTS

The relay has an event recorder, which runs continuously. All event records are stored in non-volatile memory such that information is permanently retained. The events are displayed from newest to oldest event. Each event has a header message containing a summary of the event that occurred, and is assigned an event number equal to the number of events that have occurred since the recorder was cleared. The event number is incremented for each new event.

The Event Recorder captures contextual data associated with the last 1024 events listed in chronological order from most recent to oldest. Events for a particular element are captured, if the setpoint ***EVENTS*** is selected as “Enabled”. By default, the ***EVENTS*** setpoint from all elements is enabled.

Path*: Records* > ***Event Records***

The events are cleared by pressing the pushbutton corresponding to the tab CLEAR, or when issuing clear event records command from the general clear records menu.

15.2.1 EVENT VIEWER

The Event Viewer provides a consolidated view of up to 1024 events from a single 8 Series device or up to as many as ten connected 8 Series devices or event files (10 x 1024 events in total).

To open the Event Viewer for a connected device, follow these steps in the EnerVista D&I Setup software:

1. Establish communications with the relay.
2. Select the ***Setpoints*** > ***Records*** > ***Events*** menu item.
3. A small Events window opens displaying the following:
   - Date/Time of Last Clear
   - Events Since Last Clear
   - Date/Time of Last Retrieval
4. In addition, the Event Viewer launches for a detailed view of up to 1024 of the most recent events.

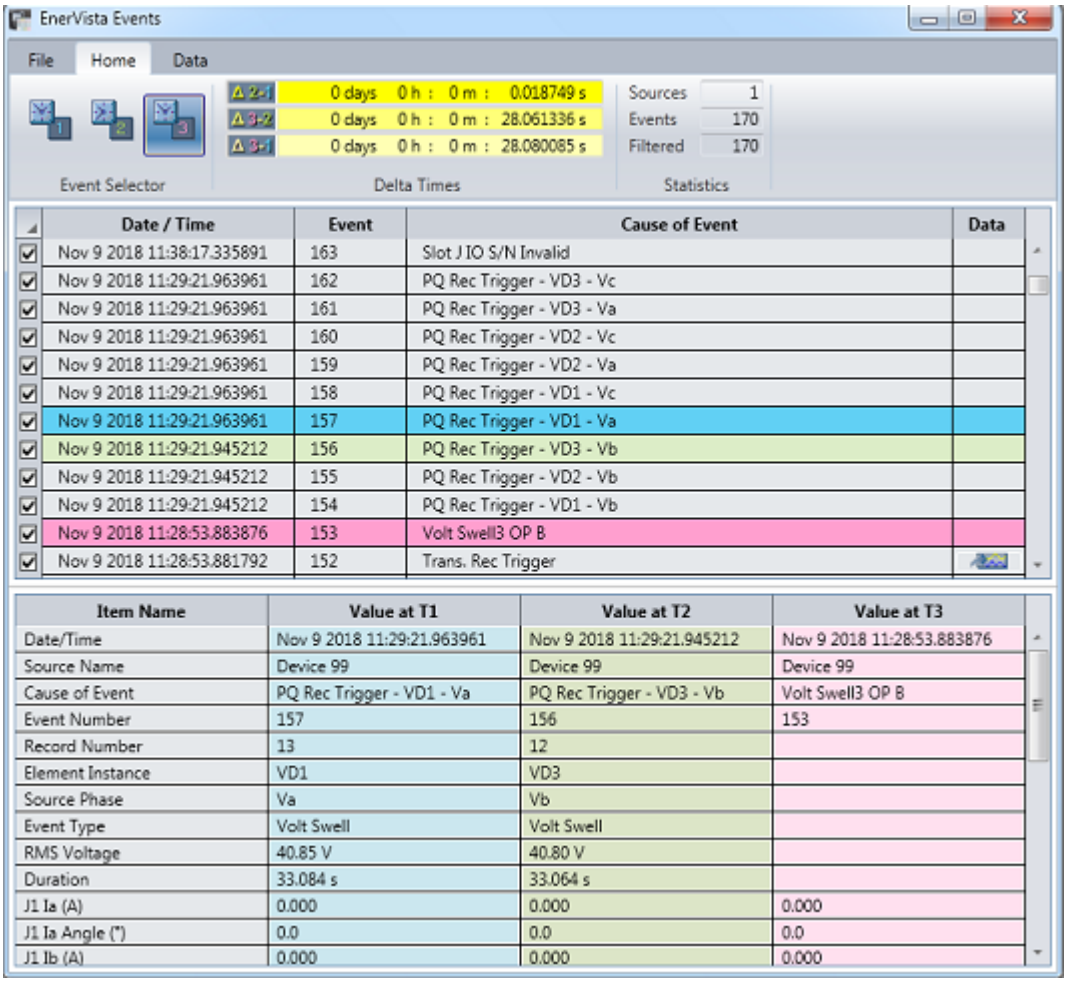

The Event Viewer window runs as a separate application, and can be moved outside of the main window and resized as needed.

If EnerVista D&I Setup software is closed, the Event Viewer remains open but offline (no further events are received from running devices, however event data is still available).

The Event List includes all events in descending chronological order. For multiple sources, a Source column showing the device name or file name is shown between the Date/Time and the Event columns.

To add an additional connected 8 Series relay to the open Event Viewer, follow these steps:

1. Establish communications with the relay.
2. Select the ***Setpoints*** > ***Records*** > ***Events*** menu item.
3. The Event Viewer adds up to 1024 of the most recent events to the open window, labeled with the new device name in the Source column.

The Event column is only shown when **Show Event Numbers** is selected on the **Data** tab.

	Date / Time	Source	Event	Cause of Event	Data
☑	Nov 8 2018 16:07:14.989887	Device 99	7	VD1 Rise Armed C	
☑	Nov 8 2018 16:07:14.989887	Device 99	6	VD1 Rise Armed B	
☑	Nov 8 2018 16:07:14.989887	Device 99	5	VD1 Rise Armed A	
☑	Nov 8 2018 16:07:14.989887	Device 99	4	VD1 Rise Armed	
☑	Nov 8 2018 16:06:57.968508	Device 99	3	Clear Start Rec	
☑	Nov 8 2018 16:06:57.712274	Device 99	2	Clear Transt Rec	
☑	Nov 8 2018 16:06:56.572667	Device 99	1	Clear Event Rec	
☑	Nov 8 2018 12:55:18.528669	Device 212	23115	Critical Fail On	
☑	Nov 8 2018 12:55:18.528669	Device 212	23114	In-Service	
☑	Nov 8 2018 12:55:14.751534	Device 212	23111	Relay Not Ready	
☑	Nov 8 2018 12:55:14.750886	Device 212	23113	Critical Fail Off	
☑	Nov 8 2018 12:55:14.750886	Device 212	23112	Out-Of-Service	

On the left side of the Event List a checkbox column with a toggle button at the top allows selection of specific events. Only the selected events are saved or copied by the **Save to File** and **Copy to Clipboard** options in the **File** tab.

Use the following keys to navigate quickly through the Event List:

- **End** scrolls to the bottom of the Event List
- **Home** scrolls to the top of the Event List
- **Page Down** scrolls one page down in the Event List
- **Page Up** scrolls one page up in the Event List

When the Event Viewer and the EnerVista D&I Setup software are both open, new events from connected devices are added to the Event Viewer as they occur and oscillography and fault report records are gradually retrieved from the device, in order of oldest to newest (assuming oscillography records and fault report records are saved in a common location).

	Date/Time	Cause of Event		Data
☑	Nov 10 2017 10:20:20.842706	Fault Rpt Trig	Fault report symbol	
☑	Nov 10 2017 10:19:08.006650	Trans. Rec Trigger	Oscillography record symbol	

Oscillography record events (such as Trans. Rec Trigger shown above) have a symbol in the Data column that includes a link to launch the oscillography record in the EnerVista D&I Setup software.

Fault report events (such as Fault Rpt Trig shown above) can be opened in the same manner by clicking the fault report symbol in the Data column.

FILE TAB

Use the **File** tab to open event files in the Event Viewer, save events to a file, or copy events to the clipboard.

- **Open File**: opens a window to browse to an events file (of type .eev, .txt. or .evt) and opens it in the existing Event Viewer window, or in a new Event Viewer window.
  - Check **In New Window** to open the file in a new Event Viewer window.
- **Save to File**: saves the selected events to a file. Hidden (filtered) events are not saved.
  - Select the events to save using the checkboxes on the left of the events list.
  - Check **Include Event Data** to save full details of each event instead of just a summary.
- **Copy to Clipboard**: copies the selected events to the clipboard. Hidden (filtered) events are not copied.
  - Select the events to copy using the checkboxes on the left of the events list.
  - Check **Include Event Data** to copy full details of each event instead of just a summary.

HOME TAB

Use the **Home** tab to select the events shown in the detailed view, measure time between events, and view the current Event Viewer statistics.

By default, the Event Viewer opens displaying the **Home** tab with the last three events selected. Details of these three events are displayed in the lower pane of the Event Viewer window.

To select up to three events from the list displayed in the Event Viewer, follow these steps:

1. From the **Home** tab, choose which event to set by clicking button 1, 2, or 3 above the **Event Selector** label.
2. Click an event from the list of displayed events.
3. The event changes color to match the selected button (blue for 1, green for 2, or red for 3) and the event details display in the lower pane, highlighted in the same color.

The absolute times between the three selected events are displayed above the **Delta Times** label.

The **Statistics** area in the **Home** tab includes the following information:

- **Sources:** the number of event sources (devices and files) currently available.
- **Events**: the number of events being managed by the Event Viewer.
- **Filtered**: the number of events shown after any active filters are applied. (Filters are applied in the **Data** tab).

DATA TAB

Use the **Data** tab to filter the events shown in the Event Viewer.

- **Show Event Numbers**: toggles on and off the event number column in the list of events. The event number can be useful for reconciling events between the Eevnt Viewer and local HMI.
- **Select Event Sources**: provides a drop-down list of all available event sources (devices and files). Uncheck a device or file to hide the associated events from the main list.
- By default events from all sources are shown.
- **Cause of Event Filter**: provides an alphabetized list of all event names, allowing different event types to be shown or hidden.
- By default all events are shown.

15.3 TRANSIENT RECORDS

Path: ***Records*** > ***Transients*** > ***Transient Records***

Using the EnerVista D&I Setup software, select a record and then click the **Launch Viewer** button to view the waveform.

15.4 FAULT REPORTS

The latest fault reports can be displayed.

Path: ***Records*** > ***Fault Reports***

NUMBER OF REPORTS

This value shows the number of reports since the last clear.

LAST TRIP DATE/TIME

Range: MM/DD/YY/ HH:MM:SS

This value is the date and time on which the last report was generated.

LAST CLEAR DATE/TIME

Range: MM/DD/YY/ HH:MM:SS

This value is the date and time on which the record was cleared.

TYPE OF FAULT

Range: N/A, AG, BG, CG, AB, BC, CA, ABG, BCG, CAG, ABC

Default: N/A

This record displays the type of fault.

DISTANCE TO FAULT

Range: 0.00 to 99.99 km/Mile in steps of 0.01 km/Mile

Default: 0.00 km/Mile

This record displays the distance to fault, in kilometers or miles as selected by the UNITS OF LENGTH setpoint.

FAULT REPORT X TIME

Range: MM/DD/YY/ HH:MM:SS

This value is the date and time on which the specified fault report was generated.

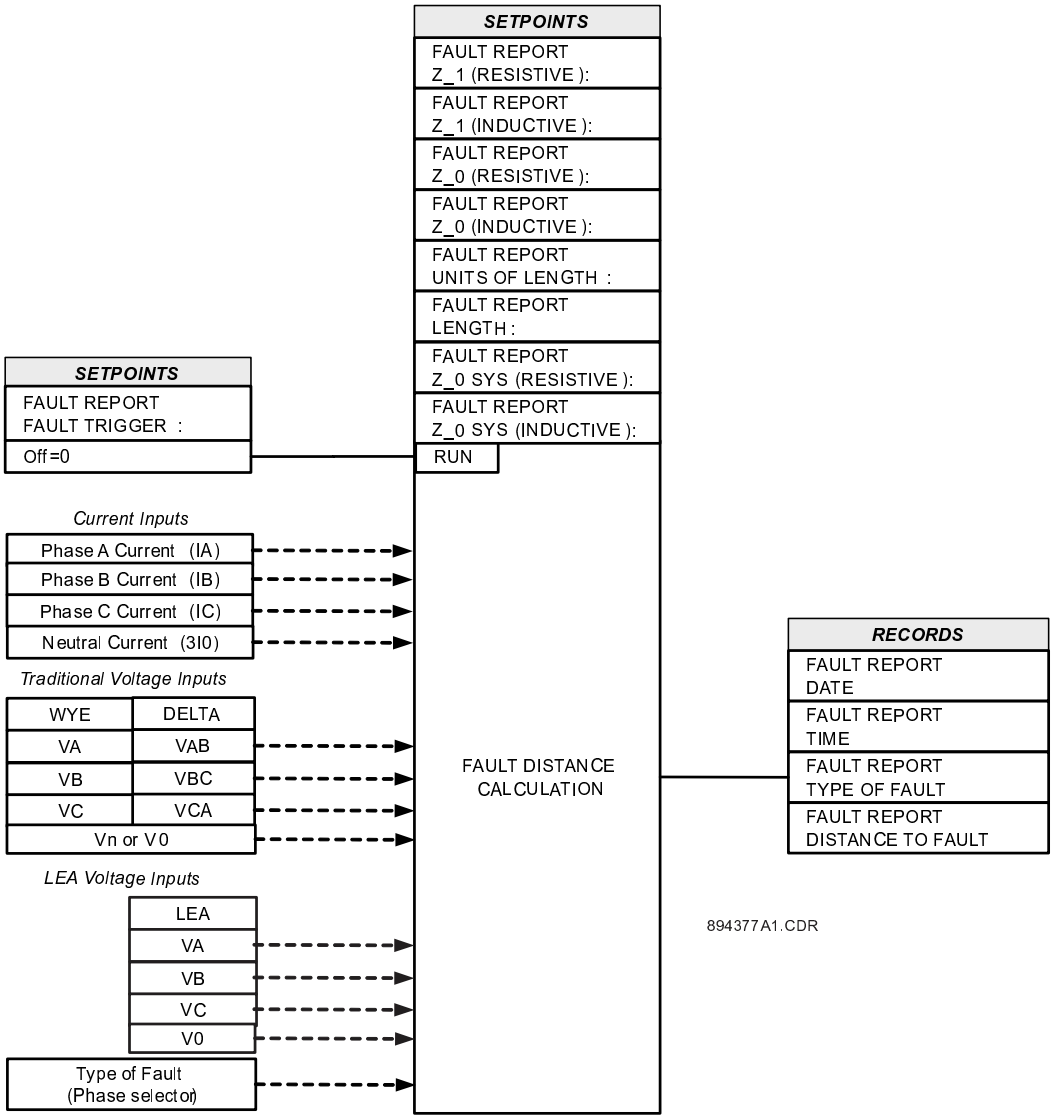

Figure 239: Fault Locator Logic diagram

15.5 DATA LOGGER

The Data Logger record can be retrieved and seen from this window. It displays the oldest and newest timestamps, and the total number of samples captured for all channels programmed in ***Setpoints*** > ***Device*** > ***Data Logger*** menu.

Path: ***Records*** > ***Data Logger***

15.6 BREAKERS

15.6.1 BREAKER ARCING CURRENT

Path: ***Records*** > ***Breakers Records*** > ***Breaker x***

ARCING CURRENT PHASE A

Range: 00.00 TO 42949672.95 kA2-cyc in steps of 0.01

ARCING CURRENT PHASE B

Range: 00.00 TO 42949672.95 kA2-cyc in steps of 0.01

ARCING CURRENT PHASE C

Range: 00.00 TO 42949672.95 Ka2-cyc in steps of 0.01

TOTAL ARCING CURRENT

Range: 00.00 TO 42949672.95 Ka2-cyc in steps of 0.01

15.6.2 BREAKER HEALTH

The menu displays the breaker monitoring values. The latest value, average of last five values and average of values since last reset are recorded, calculated and displayed.

When the DETECTION mode is selected, the values displayed here can be used as the reference for user settings. The values are saved into non-volatile memory to avoid the loss of data during the power down period.

Path: ***Records*** > ***Breakers Records*** > ***Breaker Health***

TOTAL BREAKER TRIPS

Range: 0 to 10000 in steps of 1

TRIPS SINCE LAST RESET

Range: 0 to 10000 in steps of 1

ALARM COUNTER

Range: 0 to 100 in steps of 1

LAST TRIP TIME

Range: 0 TO 4294967295 ms in steps 1

AVG. OF 5 TRIP TIME

Range: 0 TO 4294967295 ms in steps 1

AVG. OF TRIP TIME

Range: 0 TO 4294967295 ms in steps 1

LAST CLOSE TIME

Range: 0 TO 4294967295 ms in steps 1

AVG. OF 5 CLOSE TIME

Range: 0 TO 4294967295 ms in steps 1

AVG. OF CLOSE TIME

Range: 0 TO 4294967295 ms in steps 1

LAST PH A/B/C ARC TIME

Range: 00.00 TO 42949672.95 Ka2-cyc in steps of 0.01

AVG. OF 5 PH A/B/C ARC TIME

Range: 0 TO 4294967295 ms in steps 1

AVG. OF PH A/B/C ARC TIME

Range: 0 TO 4294967295 ms in steps 1

LAST SPRING CHARGE TIME

Range: 0.000 to 6000.000 s in steps of 0.001

AVG. OF 5 CHARGE TIME

Range: 0.000 to 6000.000 s in steps of 0.001

AVG. OF CHARGE TIME

Range: 0.000 to 6000.000 s in steps of 0.001

LAST PH A/B/C ARC ENERGY

Range: 00.00 TO 42949672.95 Ka2-cyc in steps of 0.01

AVG. OF 5 PH A/B/C ARCENER

Range: 00.00 TO 42949672.95 Ka2-cyc in steps of 0.01

AVG. OF PH A/B/C ARC ENERGY

Range: 00.00 TO 42949672.95 Ka2-cyc in steps of 0.01

15.7 DIGITAL COUNTERS

The present status of the sixteen Digital Counters is shown here. The status of each Counter, with the user-defined Counter name, includes the accumulated and frozen counts (the count units label also appears). Also included, is the date and time stamp for the frozen count. The Counter microseconds frozen value refers to the microsecond portion of the time stamp.

Path: ***Records*** > ***Digital Counter 1 (16)***

COUNTER X ACCUMULATED

Range: -2147483648 to 2147483647 in steps of 1

COUNTER X FROZEN

Range: -2147483648 to 2147483647 in steps of 1

DATE/TIME FROZEN

Range: Date/Time Format (MM/DD/YY HH:MM:SS)

Default: 01/01/70 00:00:00

COUNTER X us FROZEN

Range: 0 to 999999 µs in steps of 1

15.8 REMOTE MODBUS DEVICE

Up to 64 FlexAnalog operands and 32 FlexLogic operands are supported in the configurable Remote Modbus Device. Profiles are configured under ***Device*** > ***Communications*** > ***Remote Modbus Device*** > ***Device 1***, with details provided in Chapter 5. Up to 10 format codes enumerations (by default GMD_FC1 to GMD_FC10) can be defined separately for each Modbus Device Profile. For the default BSG3 device profile, 27 analogs and 27 digital operands are pre-configured in the default CID settings file.

All parameters are polled consecutively. Each FlexLogic value can be read from a different Modbus address and bit mask which is then mapped into any of the available 64 bit locations.

Path: ***Records*** > ***Remote Modbus Device*** > ***Device 1*** > ***Status***

DEVICE STATUS

Range: Offline, Online

Default: Offline

The DEVICE STATUS operand is asserted when the last communication attempt has failed. The operand is deasserted following a successful communication attempt.

LAST SUCCESSFUL POLL

Range: MM/DD/YYYY HH:MM:SS

Default: 01/01/2000 00:00

This is a timestamp value for the last successful read. The LAST SUCCESSFUL POLL is updated if the update of all pooled data is successful.

Path: Records > Remote Modbus Device > Device 1 > Digital States

FLEXLOGIC OPERANDS 1-32

Range: Defined by Remote Modbus Device Profile

Default: Off

Up to 32 FlexLogic operands can be shown here.

The displayed text is the FlexLogic name defined in the Remote Modbus Device Editor **Label** field for each Digital Point in the current profile. See ***Device*** > ***Communications*** > ***Remote Modbus Device*** > ***Device 1***.

The value displayed is based on the Enumeration field defined in the Remote Modbus Device Editor for each specific digital point.

\Device 1\Digital States

Item Name	Value	Unit
Status 1	On	
Status 2	On	
Status 3	On	
Status 4	Off	
Status 5	On	
Status 6	On	
Status 7	On	
Status 8	Off	
Status 9	On	
Warning 1	Yes	
Warning 2	Yes	

Status | Digital | Analog

\Device 1\Digital States

Item Name	Value	Unit
Warning 3	Yes	
Warning 4	No	
Warning 5	Yes	
Warning 6	Yes	
Warning 7	Yes	
Warning 8	No	
Warning 9	Yes	
Alarm 1	No	
Alarm 2	No	
Alarm 3	No	
Alarm 4	No	

Status | Digital | Analog

Figure 240: Example of Digital States for the default BSG3 RMD profile

Path: ***Records*** > ***Remote Modbus Device*** > ***Device 1*** > ***Analog Values***

RMD-FLEXANALOG 1-64

Range: -2147483648 to 2147483647 in steps of 1

Default: 0

Up to 64 FlexAnalog operands can be shown here.

The value displayed is based on the Enumeration field defined in the Remote Modbus Device Editor for each specific digital point.

The displayed text is the FlexAnalog name defined in the Remote Modbus Device Editor 'Label' field for each Analog Point in the current profile. See ***Device*** > ***Communications*** > ***Remote Modbus Device*** > ***Device 1***.

The value displayed is based on the Data Type, Multiplier, Decimals, and Units fields defined in the Remote Modbus Device Setpoint for each specific analog point.

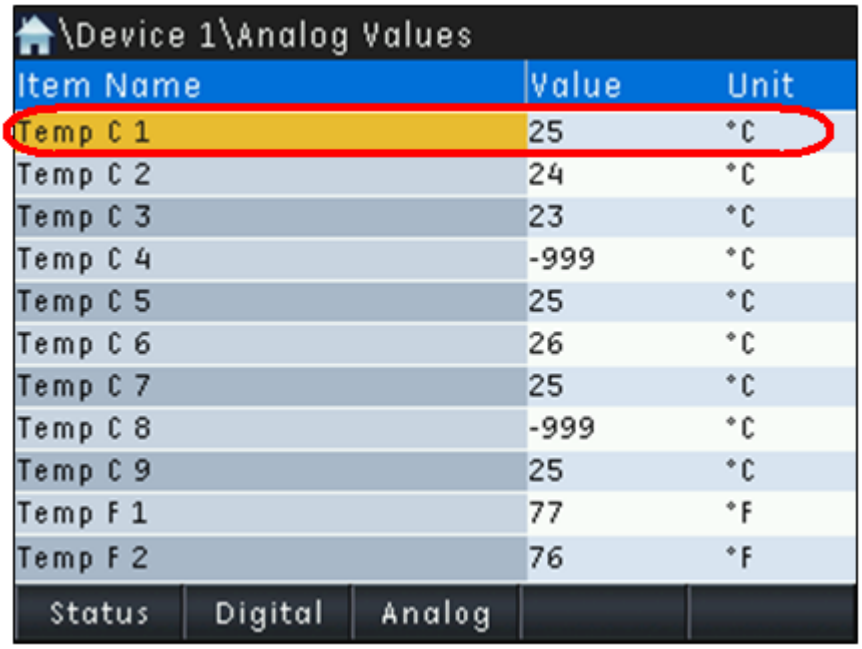

\Device 1\Analog Values

Item Name	Value	Unit
Temp C 1	25	°C
Temp C 2	24	°C
Temp C 3	23	°C
Temp C 4	-999	°C
Temp C 5	25	°C
Temp C 6	26	°C
Temp C 7	25	°C
Temp C 8	-999	°C
Temp C 9	25	°C
Temp F 1	77	°F
Temp F 2	76	°F

Status | Digital | Analog

Figure 241: Example for Analog Values of the default BSG3 RMD profile

15.9 CLEAR RECORDS

The Clear Records command is accessible from the front panel and from the EnerVista D&I Setup software.

Path: ***Device*** > ***Clear Records***

Records can be cleared either by assigning “On” or a FlexLogic operand to the appropriate setting.

With the optional 10 PB Membrane Front Panel all Clear Records commands related to Demand default to PB7 ON. This includes Clear Records for Max Current Demand, Max Real Power Demand, Max Reactive Power Demand and Max Apparent Power Demand.

Note:
The Clear Records command is also available from ***Records*** > ***Clear Records****, however there the allowable settings are only ON and OFF. (FlexLogic operands cannot be used.)*

CHAPTER 16

MAINTENANCE

16.1 CHAPTER OVERVIEW

This chapter provides some information about the device maintenance.

This chapter contains the following sections:

Chapter Overview 626

Environmental Health Report 627

General Maintenance 629

16.2 ENVIRONMENTAL HEALTH REPORT

Prolonged exposure to harsh environments and transient conditions that exceed those stated in the device specifications will reduce the life of the product. The relay has a patented Environmental Awareness Module (EAM) to record environmental data over the life of the product. The module measures temperature, humidity, surge pulses and accumulates the events every hour in pre-determined threshold buckets over a period of 15 years. Using EnerVista D&I Setup software, you can retrieve this data in the form of a histogram. This will help you to quickly identify any changes in the operating condition of installed products and arrange necessary remedial action. An example of a report is provided below.

ENVIRONMENTAL HEALTH REPORT

PRODUCT INFORMATION

Device Summary	
Device Name	Quick Connect Device
Device Type	845 Transformer Protection System
Order Code	845-EP1H1G1HNNAANGMSBC2ESWBN
Firmware Version	1.40
Serial Number	MJ1T13000155

Generated At:	May 14, 2015 03:15 PM

DEVICE ENVIRONMENT STATISTICS

Summary	
Time In Service	22 Days 8 Hrs 53 Mins 6 Secs
Time Since Last Power cycle	0 Days 1 Hrs 46 Mins 26 Secs
Minimum Ambient Temperature	25.71°C
Maximum Ambient Temperature	42.61°C
Average Ambient Temperature	37.82°C

Summary	
Minimum Humidity	13.14%
Maximum Humidity	30.45%
Average Humidity	13.14%

Ambient Temperature

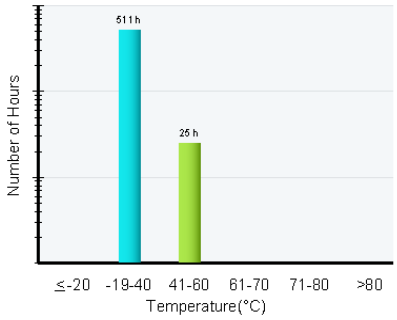

Ambient / Humidity Combination

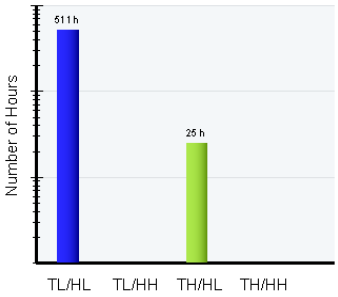

TL: Temp < 40°C
TH: Temp > 40°C
HL: Humidity < 55%
HH: Humidity > 55%

Humidity

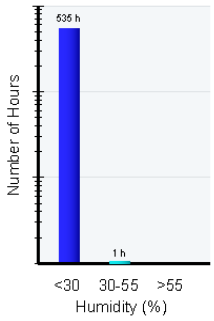

Surge Detection

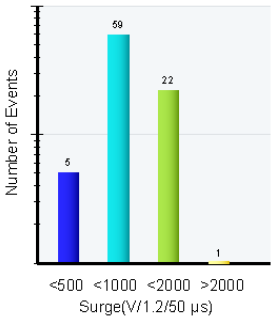

8 Series EnerVista SETUP

Version 1.40

Figure 242: Environmental Report

16.3 GENERAL MAINTENANCE

The relay requires minimal maintenance. As a microprocessor-based relay, its characteristics do not change over time. The expected service life is 20 years when the environment and electrical conditions are within stated specifications.

The relay performs continual self-tests, however we recommend scheduling regular maintenance activities. This maintenance can involve in-service, out-of-service, or unscheduled maintenance.

16.3.1 IN-SERVICE MAINTENANCE

In-service maintenance consists of the following activities:

1. Visual verification of the analog values integrity, such as voltage and current (in comparison to other devices on the corresponding system).
2. Visual verification of active alarms, relay display messages, and LED indications.
3. Visual inspection for any damage, corrosion, dust, or loose wires.
4. Event recorder file download with further events analysis.

16.3.2 OUT-OF-SERVICE MAINTENANCE

Out-of-service maintenance consists of the following activities:

1. Check wiring connections for firmness.
2. Analog values (currents, voltages, RTDs, analog inputs) injection test and metering accuracy verification. Calibrated test equipment is required.
3. Protection elements setting verification (analog values injection or visual verification of setting file entries against relay settings schedule).
4. Contact inputs and outputs verification. This test can be conducted by direct change of state forcing or as part of the system functional testing.
5. Visual inspection for any damage, corrosion, or dust.
6. Event recorder file download with further events analysis.

16.3.3 UNSCHEDULED MAINTENANCE (SYSTEM INTERRUPTION)

Unscheduled maintenance consists of the following activities:

- Viewing the event recorder and oscillography for correct operation of inputs, outputs, and elements.

CHAPTER 17

SPECIFICATIONS

17.1 DEVICE

17.1.1 ANNUNCIATOR PANEL

ANNUNCIATOR PANEL	
Number of Elements:	1 (36 indicators)
Layout:	Grid of 2x2 or 3x3
Data Storage:	Non-volatile memory
Mode:	Self-reset, latched, acknowledgeable
Display Text:	3 lines of 15 characters maximum
Visual Indication:	Flashing: 2Hz @ 50% duty cycle

17.1.2 CUSTOM CONFIGURATIONS

CUSTOM CONFIGURATIONS	
Config Mode:	Simplified, Regular

17.2 PROTECTION ELEMENTS

To obtain the total operating time, i.e. from the presence of a trip condition to initiation of a trip, add 8 ms output relay time to the operate times listed below.

Note:
If the Operate time and/or Timer Accuracy (in ms) for 25 Hz is not specified, then it is 2 times longer than the time specified for 50 Hz or 2.4 times longer if specified for 60 Hz only.

17.2.1 THERMAL OVERLOAD PROTECTION

THERMAL OVERLOAD PROTECTION	
Thermal Overload Curves:	IEC hot and cold curves, FlexCurves
FlexCurve Time Multiplier:	0.00 to 600.00 in steps of 0.01
Operate Time Constant:	0 to 1000 min in steps of 0.1 min
Overload (k) Factor:	1.00 to 1.50 in steps of 0.01
Reset Time Constant:	0.0 to 1000.0 min in steps of 0.1 min
Minimum Reset Time:	0.0 to 1000.0 min in steps of 0.1 min
Timer Accuracy (hot curve):	±100 ms or ±2%, whichever is greater
Timer Accuracy (cold curve):	±500 ms or ±2%, whichever is greater

17.2.2 PERCENT DIFFERENTIAL (87G)

PERCENT DIFFERENTIAL (87G)	
Pickup Level:	0.05 to 1.00 x CT in steps of 0.01
Dropout Level:	97 to 98% of Pickup
Slope 1 and 2:	1 to 100% in steps of 1
Break 1:	0.50 to 2.00 x CT in steps of 0.01
Break 2:	2.00 to 30.00 x CT in steps of 0.01
Operate Time:	<16 ms at >3 × Pickup at 60 Hz <20 ms at >3 × Pickup at 50 Hz

17.2.3 OVERALL PERCENT DIFFERENTIAL

OVERALL PERCENT DIFFERENTIAL PROTECTION	
Differential/Restraint Characteristic:	Dual Slope, Dual Breakpoint
Minimum Pickup level:	0.05 to 1.00 x CT in steps of 0.01
Slope 1 range:	1 to 100% in steps of 1%
Slope 2 range:	1 to 100% in steps of 1%
Breakpoint 1:	0.50 to 2.00 x CT in steps of 0.01
Breakpoint 2:	2.00 to 30.00 x CT in steps of 0.01
2nd harmonic inhibit level:	0.1 to 40.0% in steps of 0.1%
2nd harmonic inhibit mode:	Per-phase, Average, 2-out-of-3, 1-out-of-3
5th harmonic inhibit level:	1.0 to 40.0% in steps of 0.1%
Dropout level:	97 to 98% of Pickup

OVERALL PERCENT DIFFERENTIAL PROTECTION	
Operate time:	< 16/22 ms at >3 x Pickup @60Hz (harmonic inhibits disabled/ enabled) < 18/26 ms at >3 x Pickup @50Hz (harmonic inhibits disabled/ enabled)
Level accuracy:	±0.5% of reading current, or ±1% of rated

17.2.4 GENERATOR UNBALANCE

GENERATOR UNBALANCE (46)	
Stages:	2 (I^2t trip with linear reset and definite-time alarm)
Trip/Alarm Pickup Level:	0.00 to 100.00% FLA in steps of 0.01
Constant K:	0.00 to 100.00 in steps of 0.01
Maximum Time:	0 to 1000 s in steps of 1 s
Reset Time:	0.00 to 1000.00 s in steps of 0.01 s
Alarm Delay:	0.00 to 600.00 s in steps of 0.01 s
Pickup Accuracy:	±0.025 A or ±3% of reading, whichever is greater
Operate Time:	< 20 ms at 1.10 x pickup at 60 Hz
Timing Accuracy:	±3% of operate time or ±20 ms (whichever is greater)
Generator Unbalance Element:	Trip and Alarm

17.2.5 INADVERTENT ENERGIZATION

INADVERTENT ENERGIZATION	
Operate time:	<12 ms at >3 x O/C Pickup@60Hz <15 ms at >3 x O/C Pickup@50Hz

17.2.6 THIRD HARMONIC NEUTRAL UNDERVOLTAGE

THIRD HARMONIC NEUTRAL UNDERVOLTAGE	
Operating Quantity:	3rd harmonic of auxiliary voltage
Pickup Level:	0.10 to 20.00 V secondary in steps of 0.01
Dropout Level:	103% of pickup for >5V; (pickup + 0.15V) for <5V
Level Accuracy:	±5% of reading for >0.5V up to 45V secondary; 30mV for <0.5V
Pickup Time Delay:	0.00 to 600.00 s in steps of 0.01
Timer Accuracy:	±3% of the delay setting time or ±½ cycle (whichever is greater) from pickup to operate
Power Inhibit Pickup Level:	0.000 to 1.250 x Rated in steps of 0.001
Power Inhibit Dropout Level:	102 to 103% of pickup for maximum blocking power97 to 98% of pickup for minimum blocking power
Power Level Accuracy:	±1% of reading or ±0.0025 of rated whichever is greater
Blocking Low Voltage Level:	0.00 to 1.50 x VT in steps of 0.01
Blocking Low Voltage Dropout Level:	102 to 103% of pickup for blocking low voltage level
Blocking Low Voltage Accuracy:	±0.5% of reading from 10 to 208 V
Operate Time:	< 30 ms @ 0.90 x Pickup @ 60 Hz < 36 ms @ 0.90 x Pickup @ 50 Hz
Elements:	Trip and Alarm

17.2.7 THIRD HARMONIC VOLTAGE DIFFERENCE

THIRD HARMONIC VOLTAGE DIFFERENCE	
Operating Quantity:	
Pickup Level:	0.005 to 0.900 in steps of 0.001
Level Accuracy:	±0.02 pu
Dropout Level:	103% of Pickup for > 0.333; (Pickup+0.010) for <0.33397% of (1-Pickup) for >0.333; (1-Pickup)-0.010 for<0.333
Voltage Supervision Level:	0.5 to 30.0 V in steps of 0.1
Supervision Level Accuracy:	±5% of reading for >1V up to 45 V secondary; 0.07 V for <1V
Supervision Dropout Level:	97% of pickup for >7V; (Pickup – 0.2V) for <7V
Pickup Time Delay:	0.00 to 600.00 s in steps of 0.01
Timer Accuracy:	±3% of the delay setting time or ±½ cycle (whichever is greater) from pickup to operate
Operate Time:	< 30 ms @ 0.90 x Pickup @ 60 Hz < 36 ms @ 0.90 x Pickup @ 50 Hz

17.2.8 OFFLINE OVERCURRENT

OFFLINE OVERCURRENT	
Pickup Level:	0.05 to 1.00 x CT in steps of 0.01 of any one phase
Time Delay:	0.00 to 600.00 s in steps of 0.01 s
Pickup Accuracy:	as per Phase Current Inputs
Operate Time:	< 12 ms at 3 x Pickup at 60 Hz
Timer Accuracy:	±3% of operate time or ±¼ cycle (whichever is greater)

17.2.9 CURRENT UNBALANCE (46)

CURRENT UNBALANCE (46)	
Unbalance:	Unbal = (I_2 / I_1) x A_{factor} x 100%A_{factor} = $(I_{avg}$ / FLA) if I_{avg} < FLAA_{factor} = 1 if I_{avg} >= FLA
Trip/Alarm Pickup Level:	4.0 to 50.0% in steps of 0.1%
Trip Operating Curves:	Definite Time: T=TDM sec. Inverse Time: T= $(TDM/[Unbal]^2)$ sec
Trip Pickup Delay:	0.00 to 180.00 s in steps of 0.01 s when Trip Curve = Definite Time
Trip Time Dial Multiplier (TDM):	0.00 to 180.00 in steps of 0.01 when Trip Curve = Inverse Curve
Trip Maximum Time:	0.00 to 1000.00 s in steps of 0.01 s
Trip Minimum Time:	0.00 to 1000.00 s in steps of 0.01 s
Trip Reset Time:	0.00 to 1000.00 s in steps of 0.01 s
Alarm Time Delay:	0.00 to 180.00 s in steps of 0.01 s
Single Phasing Pickup Level:	unbalance level > 40% or when I_{avg} >=25%FLA and current in any phase is less than the cutoff current
Single Phasing Time Delay:	2 seconds
Pickup Accuracy:	±2% of the reading
Operate Time:	<2 cycles at 1.10 x pickup (NOTE 1)

CURRENT UNBALANCE (46)	
Timing Accuracy:	±3% of delay setting time or ±20 ms, whichever is greater
Element:	Trip and Alarm
Single Phasing Element:	Trip

17.2.10 SPEED PROTECTION

SPEED PROTECTION	
Configuration:	Assign to any contact input
Operating Range:	20 to 120% of Rated RPM
Minimum Pulse Width:	>8% of a revolution
Level Accuracy:	±1% of rated speed
Timer Accuracy:	±3% of delay setting or ±2 power cycles (whichever is greater) from pickup to operate
Element:	Trip and Alarm

17.2.11 LOSS OF EXCITATION (40)

LOSS OF EXCITATION (40)	
Operating Condition:	Positive-sequence impedance
Characteristic:	2 independent negative mho circles (LOE circle 1, 2)
Circle 1(2) Diameter:	0.1 to 300.0 Ω (in secondary) in steps of 0.1Ω
Circle 1(2) Offset:	0.1 to 300.0 Ω (in secondary) in steps of 0.1Ω
Reach (Impedance) Accuracy:	±5%
Under Voltage (UV) Supervision Level:	0.00 to 1.50 x VT in steps of 0.01 x VT
UV Pickup Accuracy:	as per phase voltage inputs
Pickup Delay:	0.00 to 600.00 s in steps of 0.01 s
Timer Accuracy:	±3% of delay setting or ±½ cycle (whichever is greater)
Operate Time:	< 3 cycles

17.2.12 OUT-OF-STEP (78)

OUT-OF-STEP (78)	
Characteristic:	Single blinder with offset mho supervisory
Measured Impedance:	Positive-sequence
Current Supervision Pickup Level:	0.05 to 10.00 x CT in steps of 0.01 x CT
Fwd/Reverse Reach (sec.):	0.10 to 500.00 Ω in steps of 0.01 Ω
Left and Right Blinders (sec.):	0.10 to 500.00 Ω in steps of 0.01 Ω
Impedance Accuracy:	±5%
Blinder RCA:	40° to 90° in steps of 1°
Angle Accuracy:	±2°
Timer Accuracy:	±3% of operate time or ±¼ cycle (whichever is greater)

17.2.13 OVERLOAD ALARM

OVERLOAD ALARM	
Operating Parameter:	Average phase current (RMS)
Pickup Level:	0.50 to 3.00 x FLA in steps of 0.01 x FLA
Dropout Level:	97 to 98% of Pickup
Level Accuracy:	For 0.1 to 2.0 x CT: ±0.5% of reading or ±0.4% of rated, whichever is greater. For > 2.0 × CT rating ±1.5% of reading
Pickup Delay:	0.00 to 180.00 s in steps of 0.01 s
Dropout Delay:	0.00 to 180.00 s in steps of 0.01 s
Timer Accuracy:	±3% of delay setting or ±½ cycle (whichever is greater) from pickup to operate

17.2.14 PHASE REVERSAL (47)

PHASE REVERSAL (47)	
Phase Reversal Condition:	V_2/V_1=100% when phase to phase voltages are greater than 50% of VT
Configuration:	ABC or ACB phase rotation
Pickup/Dropout Time Delay:	0.00 to 180.00 s in steps of 0.01 s
Timer Accuracy:	±3% of delay setting or ±1% cycle (whichever is greater) from pickup to operate

17.2.15 PHASE/NEUTRAL/GROUND INSTANTANEOUS OVERCURRENT (50P/N/G)

PHASE/NEUTRAL/GROUND INSTANTANEOUS OVERCURRENT (50P/N/G)	
Current (for Phase IOC only):	Phasor or RMS
Current (for Neutral/Ground IOC only):	Fundamental Phasor Magnitude
Pickup Level:	0.020 to 30.000 x CT in steps of 0.001 x CT
Dropout Level:	97 to 98% of Pickup
Level Accuracy:	For 0.1 to 2.0 x CT: ±0.5% of reading or ±0.4% of rated, whichever is greater, for > 2.0 x CT: ±1.5% of reading. (For Neutral IOC, Iop = 3 * (|I_0| - K * |I_1|)where K = 1/16 and |I_0| = 1/3 * |In|))
Operate Time:	<12 ms typical at 3 × Pickup at 60 Hz (Phase/Ground IOC) <16 ms typical at 3 × Pickup at 60 Hz (Neutral IOC) <15 ms typical at 3 × Pickup at 50 Hz (Phase/Ground IOC) <20 ms typical at 3 × Pickup at 50 Hz (Neutral IOC)
Timer Accuracy	±3% of delay setting or ±¼ cycle (whichever is greater) from pickup to operate

Note:
Operating time specifications given above are applicable when RMS inputs are used. Typical times are average operate times over multiple test cases.

17.2.16 PHASE/NEUTRAL/GROUND TIME OVERCURRENT (51P/N/G)

PHASE/NEUTRAL/GROUND TIME OVERCURRENT (51P/N/G)	
Current:	Phasor or RMS

PHASE/NEUTRAL/GROUND TIME OVERCURRENT (51P/N/G)	
Pickup Level:	0.020 to 30.000 x CT in steps of 0.001 x CT
Dropout Level:	97 to 98% of Pickup
Level Accuracy (for 0.1 to 2.0 x CT):	±0.5% of reading or ±0.4% of rated, whichever is greater.
Level Accuracy (for > 2.0 x CT):	±1.5% of reading
Curve Shape:	IEEE Extremely/Very/Moderately Inverse. ANSI Extremely/Very/Normally/Moderately Inverse, Definite Time, IEC A/B/C and Short Inverse. IAC Extremely/Very/Inverse/Short Inverse. FlexCurve A/B/C/D, I^2t, I^4t
Curve Multiplier:	0.05 to 600.00 in steps of 0.01
Reset Time:	Instantaneous, Timed
Curve Timing Accuracy:	Currents > 1.03 to 20 x pickup: ±3% of operate time or ±½ cycle (whichever is greater) from pickup to operate
Voltage Restrained Function (51V):	Modifies Pickup from 0.1 < V < 0.9 VT Nominal in a fixed linear relationship

Note:
Add 1.5 cycles to the curve time to obtain the TOC operating time, i.e., from fault inception until operation.

17.2.17 PHASE DIRECTIONAL OVERCURRENT (67P)

PHASE DIRECTIONAL OVERCURRENT (67P)	
Relay Connection:	90°(Quadrature)
Quadrature Voltage:	ABC phase seq.: phase A (Vbc), phase B (Vca), phase C (Vab) ACB phase seq.: phase A (Vcb), phase B (Vac), phase C (Vba)
Polarizing Voltage Threshold (up to FW 3.xx):	0.050 to 3.000 x VT in steps of 0.001 x VT
Polarizing Voltage Threshold (from FW 4.10):	0.015 to 3.000 x VT in steps of 0.001 x VT
Current Sensitivity Threshold:	0.05 x CT
Characteristic Angle:	0° to 359° in steps of 1°
Angle Accuracy:	±3°
Operation Time (FlexLogic™ operands):	Reverse to Forward transition: < 12 ms, typically. Forward to Reverse transition: <8 ms, typically.

17.2.18 NEUTRAL DIRECTIONAL OVERCURRENT (67N)

NEUTRAL DIRECTIONAL OVERCURRENT (67N)	
Directionality:	Co-existing forward and reverse
Polarizing:	Voltage, Current, Dual
Polarizing Current:	Ig
Operating Current:	I0
Level Sensing:	3 x (|I0| – K x |I1|), Ig
Restraint, K:	0.000 to 0.500 in steps of 0.001
Characteristic Angle:	-90° to 90° in steps of 1°
Limit Angle:	40° to 90° in steps of 1°, independent for forward and reverse
Angle Accuracy:	±3° (both voltage and current (1A/5A only) polarizing signals)

NEUTRAL DIRECTIONAL OVERCURRENT (67N)	
Pickup Level:	0.050 to 30.000 x CT in steps of 0.001 x CT
Dropout Level:	97 to 98% of Pickup
Operate Time (no direction transition):	< 16 ms at 3 x Pickup at 60 Hz < 20 ms at 3 x Pickup at 50 Hz

17.2.19 GROUND DIRECTIONAL OVERCURRENT (67G)

GROUND DIRECTIONAL OVERCURRENT (67G)	
Directionality:	Co-existing forward and reverse
Polarizing (845):	Voltage
Polarizing (850, 889):	Voltage, Current, Dual
Polarizing Voltage:	V_0 or VX
Polarizing Current:	Isg
Operating Current:	Ig
Level Sensing:	Ig, Isg
Characteristic Angle:	-90° to 90° in steps of 1°
Limit Angle:	40° to 90° in steps of 1°, independent for forward and reverse
Angle Accuracy:	±2°
Pickup Level (up to FW 3.xx)	0.050 to 30.000 x CT in steps of 0.001
Pickup Level (from FW 4.10)	0.010 to 30.000 x CT in steps of 0.001
Level accuracy (889)	50:0.025A CT: For 0.5A to 4A: ±0.1A; For > 4A: ±0.2A
Dropout Level:	97 to 98%
Operate Time (no direction transition):	< 12 ms typical at 3 x Pickup at 60 Hz < 15 ms typical at 3 x Pickup at 50 Hz

17.2.20 NEGATIVE SEQUENCE INSTANTANEOUS OVERCURRENT

NEGATIVE SEQUENCE INSTANTANEOUS OVERCURRENT (50_2)	
Current:	I_2 Fundamental Phasor Magnitude
Pickup Level:	0.020 to 30.000 x CT in steps of 0.001 x CT
Dropout Level:	97 to 98% of Pickup
Level Accuracy for 0.1 to 2.0 x CT:	±0.5% of reading or ±0.4% of rated, whichever is greater,
Level Accuracy for > 2.0 x CT:	±1.5% of reading. (For Iop = |I_2| - K * |I_1|, where K = 1/8
Pickup Time Delay:	0.000 to 6000.000 s in steps of 0.001 s
Dropout Time Delay:	0.000 to 6000.000 s in steps of 0.001 s
Overreach:	< 2%
Operate Time:	< 12 ms typical at 3 x Pickup at 60 Hz < 15 ms typical at 3 x Pickup at 50 Hz
Timer Accuracy:	±3% of delay setting or ±½ cycle (whichever is greater) from pickup to operate

17.2.21 SENSITIVE GROUND DIRECTIONAL OVERCURRENT (67SG)

SENSITIVE GROUND DIRECTIONAL OVERCURRENT (67SG)	
Directionality:	Co-existing forward and reverse

SENSITIVE GROUND DIRECTIONAL OVERCURRENT (67SG)	
Polarizing:	Voltage, Current, Dual
Polarizing Voltage:	V_0 or VX
Polarizing Current:	Ig
Operating Current:	Isg
Level Sensing:	Ig, Isg
Characteristic Angle:	-90° to 90° in steps of 1°
Limit Angle:	40° to 90° in steps of 1°, independent for forward and reverse
Angle Accuracy:	±3°
Pickup Level:	0.005 to 3.000 x CT in steps of 0.001 x CT
Dropout Level:	97 to 98%
Operate Time (no direction transition):	< 12 ms typical at 3 × Pickup at 60 Hz < 15 ms typical at 3 × Pickup at 50 Hz
SENSITIVE GROUND INSTANTANEOUS OVERCURRENT (50SG)	
Operating Parameter:	Isg (Fundamental Phasor Magnitude)
Pickup Level:	0.005 to 3.000 x CT in steps of 0.001 x CT 0.50 to 15.00 A in steps of 0.01 A (For 50:0.025)
Dropout Level:	97 to 98% of Pickup
Level Accuracy:	For 0.1 to 2.0 x CT: ±0.5% of reading or ±0.4% of rated (whichever is greater). For > 2.0 x CT: ±1.5% of reading > 2.0 x CT rating For 50:0.025: ±0.1 A for 0.5 A to 4 A; ±0.2 A for > 4 A
Operate Time:	< 12 ms at 3 × Pickup at 60 Hz
Timer Accuracy:	±3% of operate time or ±¼ cycle (whichever is greater)

17.2.22 SENSITIVE GROUND TIME OVERCURRENT (51SG)

SENSITIVE GROUND TIME OVERCURRENT (51SG)	
Operating Parameter:	Isg (RMS or Fundamental)
Pickup Level:	0.005 to 3.000 x CT in steps of 0.001 x CT
Pickup Level for 50:0.025 (850 only)	0.50 to 15.00 A in steps of 0.01 A
Dropout Level:	97 to 98% of Pickup
Level Accuracy:	±1.5% of setting or ±0.6% of rated (whichever is greater)
Level Accuracy for 50:0.025 (850 only)	±0.1A for 0.5A to 4A; ±0.2A for > 4A
Dropout Level:	97 to 98% of Pickup
Curve Shape:	IEEE Extremely/Very/Moderately Inverse ANSI Extremely/Very/Normally/Moderately Inverse IEC A/B/C and Short Inverse IAC Extreme/Very/Inverse/Short Inverse I2t, I4t, FlexCurves A/B/C/D, Definite Time
Curve Multiplier:	0.05 to 600.00 in steps of 0.01

SENSITIVE GROUND TIME OVERCURRENT (51SG)	
Reset Time:	Instantaneous, Timed
Curve Timing Accuracy:	Currents > 1.03 to 20 x pickup: ±%3 of operate time or ±½ cycle (whichever is greater) from pickup to operate

17.2.23 PHASE OVERVOLTAGE (59P)

PHASE OVERVOLTAGE (59P)	
Voltage:	Fundamental Phasor Magnitude
Pickup Level:	0.02 to 3.00 x VT in steps of 0.01 x VT
Dropout Level (up to 3.xx):	97 to 98% of Pickup
Dropout Level (from 4.10):	Configurable: Either 97 to 98% of pickup or 95 to 97% of pickup
Level Accuracy:	±0.5% of reading from 10 to 208 V
Phases Required for Operation:	Any one, Any two, All three
Pickup Time Delay:	0.000 to 6000.000 s in steps of 0.001s (Definite Time)
Dropout Time Delay:	0.000 to 6000.000 s in steps of 0.001s (Definite Time)
Pickup Accuracy:	Per phase voltage input channel error
Operate Time:	< 30 ms at 1.1 x pickup at 60Hz < 35 ms at 1.1 x pickup at 50Hz
Timer Accuracy:	±3% of delay setting or ±¼ cycle (whichever is greater) from pickup to operate

17.2.24 NEUTRAL OVERVOLTAGE (59N)

NEUTRAL OVERVOLTAGE (59N)	
Operating Parameter:	3V_0 calculated from phase to ground voltages
Pickup Level:	0.02 to 3.00 x VT in steps of 0.01 x VT
Dropout Level:	97 to 98% of Pickup
Level Accuracy:	±0.5% of reading from 10 to 208 V
Neutral Overvoltage Curves (3.xx):	Definite time, FlexCurve A/B/C/D, Inverse time (from FW 4.10)
Neutral Overvoltage Curves (4.10):	FlexCurve A/B/C/D, Inverse time
Pickup Time Delay:	0.000 to 6000.000 s in steps of 0.001 s (Definite Time)
Dropout Time Delay:	0.000 to 6000.000 s in steps of 0.001 s (Definite Time)
Operate Time:	< 25 ms at 1.1 x pickup at 60Hz < 30 ms at 1.1 x pickup at 50Hz
Curve Timing Accuracy:	at > 1.1 x Pickup: ±3% of curve delay or ±1 cycle (whichever is greater) from pickup to operate

17.2.25 AUXILIARY OVERVOLTAGE (59X)

AUXILIARY OVERVOLTAGE (59X)	
Operating Parameter:	Vx (Phasor)

AUXILIARY OVERVOLTAGE (59X)	
Pickup Level:	0.00 to 3.00 x VT in steps of 0.01 x VT
Dropout Level (up to 3.xx):	97 to 98% of Pickup
Dropout Level (from 4.10):	Configurable: Either 97 to 98% of pickup or 95 to 97% of pickup
Level Accuracy:	±0.5% of reading from 10 to 240 V
Overvoltage Curves:	Definite Time, Inverse Time, FlexCurves A/B/C/D
Pickup Time Delay:	0.000 to 6000.000 s in steps of 0.001s
Dropout Time Delay:	0.000 to 6000.000 s in steps of 0.001s
Pickup Accuracy:	Auxiliary voltage input channel error
Operate Time:	< 30 ms at 1.1 x pickup at 60Hz
Curve Timing Accuracy:	at >1.1 x PKP: 3.5% of operate time ±½ cycle (whichever is greater) from pickup to operate
Timer Accuracy:	±3% of operate time or ±½ cycle (whichever is greater)

17.2.26 NEGATIVE SEQUENCE OVERVOLTAGE (59_2)

NEGATIVE SEQUENCE OVERVOLTAGE (59_2)	
Operating Parameter:	V_2
Pickup Level:	0.00 to 3.00 x VT in steps of 0.01 x VT
Dropout Level (up to 3.xx):	97 to 98% of Pickup
Dropout Level (from 4.10):	Configurable: Either 97 to 98% of pickup or 95 to 97% of pickup
Level Accuracy:	±0.5% of reading from 10 to 208 V
Pickup Time Delay:	0.000 to 6000.000 s in steps of 0.001 s
Dropout Time Delay:	0.000 to 6000.000 s in steps of 0.001 s
Operate Time:	< 25 ms at 1.1 x pickup at 60 Hz < 30 ms at 1.1 x pickup at 50 Hz
Timer Accuracy:	±3% of delay setting or ±¼ cycle (whichever is greater) from pickup to operate

17.2.27 PHASE UNDERVOLTAGE (27P)

PHASE UNDERVOLTAGE (27P)	
Voltage:	Fundamental Phasor Magnitude
Minimum Voltage:	0.00 to 1.50 x VT in steps of 0.01 x VT
Pickup Level:	0.00 to 1.50 x VT in steps of 0.01 x VT
Dropout Level (up to 3.xx)	101 to 103% of Pickup
Level Accuracy:	±0.5% of reading from 10 to 208 V
Phases Required for Operation:	Any one, Any two, All three
Undervoltage Curves:	Definite Time, GE IAV Inverse Time or FlexCurves A/B/C/D
Pickup Time Delay:	0.000 to 6000.000 s in steps of 0.001s
Operate Time:	< 20 ms at 0.90 x pickup at 60 Hz < 25 ms at 0.90 x pickup at 50 Hz
Curve Timing Accuracy:	At < 0.90 x pickup: ±3.5% of curve delay or ±½ cycle (whichever is greater) from pickup to operate

17.2.28 VOLTS PER HERZ (24)

VOLTS PER HERTZ (24)	
Voltages:	Phasor only
Pickup Level:	0.80 to 4.00 in steps of 0.01 pu
Dropout Level:	97 to 98% of pickup
Level Accuracy:	±0.02 pu
Timing Curves:	Definite Time; IEC Inverse A/B/C; FlexCurves A, B, C, and D
TD Multiplier:	0.05 to 600.00 s in steps of 0.01
Reset Delay:	0.00 to 6000.000 s in steps of 0.01
Timer Accuracy:	±3% of operate time or ±15 cycles (whichever is greater) for values greater than 1.1 x pickup
Operate Time:	< 2 cycles
Number of Elements:	6

17.2.29 OVERFREQUENCY (81O)

OVERFREQUENCY (81O)	
Pickup Level:	20.00 to 65.00 Hz in steps of 0.01
Dropout Level:	Pickup -0.03 Hz
Pickup Time Delay:	0.000 to 6000.000 s in steps of 0.001 s
Dropout Time Delay:	0.000 to 6000.000 s in steps of 0.001 s
Minimum Operating Voltage:	0.000 to 1.250 x VT in steps of 0.001 x VT
Level Accuracy:	±0.01 Hz
Timer Accuracy:	±3% of delay setting or ±¼ cycle (whichever is greater) from pickup to operate
Operate Time:	Typically 7.5 cycles at 0.1 Hz/s change. Typically 7 cycles at 0.3 Hz/s change. Typically 6.5 cycles at 0.5 Hz/s change.

Note:
Typical times are average Operate Times including variables such as frequency change instance, test method, etc., and may vary by ±0.5 cycles.

17.2.30 UNDERFREQUENCY (81U)

UNDERFREQUENCY (81U)	
Pickup Level:	20.00 to 65.00 Hz in steps of 0.01
Dropout Level:	Pickup +0.03 Hz
Pickup Time Delay:	0.000 to 6000.000 s in steps of 0.001s
Dropout Time Delay:	0.000 to 6000.000 s in steps of 0.001s
Minimum Operating Voltage:	0.000 to 1.250 x VT in steps of 0.001 x VT
Minimum Operating Current:	0.000 to 30.000 x CT in steps of 0.001 x CT
Level Accuracy:	±0.01 Hz

UNDERFREQUENCY (81U)	
Timer Accuracy:	±3% of delay setting or ±¼ cycle (whichever is greater) from pickup to operate
Operate Time:	Typically 7.5 cycles at 0.1 Hz/s change. Typically 7 cycles at 0.3 Hz/s change. Typically 6.5 cycles at 0.5 Hz/s change.

Note:
Typical times are average Operate Times including variables such as frequency change instance, test method, etc., and may vary by ±0.5 cycles.

17.2.31 RATE OF CHANGE OF FREQUENCY (81R)

FREQUENCY RATE OF CHANGE (81R)	
df/dt Trend:	Increasing, Decreasing, Bi-directional
df/dt Pickup Level:	0.10 to 15.00 Hz/s in steps of 0.01 Hz/s
df/dt Dropout Level:	96% of Pickup Level
df/dt Level Accuracy:	80 mHz/s or 3.5%, whichever is greater
Minimum Frequency:	20.00 to 80.00 Hz in steps of 0.01 Hz
Maximum Frequency:	20.00 to 80.00 Hz in steps of 0.01 Hz
Minimum Voltage Threshold:	0.000 to 1.250 x VT in steps of 0.001 x VT
Minimum Current Threshold:	0.000 to 30.000 x CT in steps of 0.001 x CT
Pickup Time Delay:	0.000 to 6000.000 s in steps of 0.001 s
Timer Accuracy:	±3% of delay setting or ±¼ cycle (whichever is greater) from pickup to operate
95% Settling Time for df/dt:	< 24 cycles
Operate Time:	typically 10 cycles at 2 × Pickup

17.2.32 DIRECTIONAL POWER

DIRECTIONAL POWER (32)	
Measured Power	3-phase
Number of Stages	2
Characteristic Angle	0° to 359° in steps of 1°
Calibration Angle	0.00° to 0.95° in steps of 0.05°
Power Pickup Range	–1.200 to 1.200 x Rated Power in steps of 0.001
Pickup Level Accuracy	±1% or ±0.001 x Rated Power, whichever is greater
Hysteresis	2% or 0.001 x Rated Power, whichever is greater
Pickup Time Delay	0.000 to 6000.000 s in steps of 0.001 s
Operate Time	< 55 ms at 1.1 x pickup at 60 Hz < 65 ms at 1.1 x pickup at 50 Hz
Timer Accuracy	±3% of delay setting or ±¼ cycle (whichever is greater) from pickup to operate

17.2.33 REACTIVE POWER (40Q)

REACTIVE POWER (40Q)	
Operating Condition:	Three-phase reactive power
Positive/Negative var Trip/Alarm Pickup Level	0.02 to 2.00 x Rated in steps of 0.01
Pickup Level Accuracy:	±1.0% of reading
Positive/Negative var Trip/Alarm Pickup Delay:	0.00 to 600.00 s in steps of 0.01 s
Timer Accuracy:	±3.0% of delay time or ±10 ms, whichever is greater
Hysteresis:	2 to 3%
Operate Time:	< 45 ms at 60 Hz < 50 ms at 50 Hz
Elements:	Trip and Alarm

17.2.34 RTD PROTECTION

RTD PROTECTION	
Pickup:	1°C to 250°C in steps of 1°C
Hysteresis:	2°C
Timer Accuracy:	<2 s
Elements:	Trip and Alarm

17.2.35 ARC FLASH HS PHASE/GROUND INSTANTANEOUS OVERCURRENT (50P/50G)

ARC FLASH HS PHASE/GROUND INSTANTANEOUS OVERCURRENT HS 50P/50G	
Current:	Phasor Magnitude (special high speed algorithm)
Pickup Level:	0.050 to 30.000 x CT in steps of 0.001 x CT
Dropout Level:	97 to 98% of Pickup
Level Accuracy:	For 0.1 to 0.2 x CT: ±0.2% of reading or 1.5% of rated, whichever is greater For > 0.2 x CT: ±1.5% of reading
Operate Time:	2ms for light-only detection using FlexLogic operands 4 ms at > 6 x Pickup at 60 Hz 5 ms at > 6 x Pickup at 50 Hz 4-8 ms at > (3-6) x Pickup at 60 Hz 4-10 ms at > (3-6) x Pickup at 50 Hz

17.3 CONTROL

17.3.1 FIELD BREAKER DISCREPANCY

FIELD BREAKER DISCREPANCY	
Configurable:	Assigned to any FlexLogic operand (digital input preferred)
Time Delay:	0.10 to 600.00 s in steps of 0.01 s
Timing Accuracy:	±100 ms or ±0.5% of total time

17.3.2 SEQUENTIAL SHUTDOWN

SEQUENTIAL SHUTDOWN	
Arming Input:	Configurable to any FlexLogic operand
Pickup Level:	0.02 to 0.99 x Rated MW in steps of 0.01
Power Direction:	Low Forward Power or Reverse Power
Time Delay:	0.20 to 180.00 s in steps of 0.01 s
Pickup Accuracy:	see Power Metering
Timing Accuracy:	±100 ms or ±0.5% of total time

17.3.3 SYNCHROCHECK

SYNCHROCHECK (25)	
Maximum Frequency Difference:	0.01 to 5.00 Hz in steps of 0.01 Hz for frequency window of f_{nom} ±5 Hz
Maximum Angle Difference:	1° to 100° in steps of 1°
Maximum Voltage Difference:	10 to 600000 V in steps of 1 V
Hysteresis for Maximum Frequency Difference:	0.01 to 0.10 Hz in steps of 0.01 Hz
Breaker Closing Time:	0.000 to 6000.000 s in steps of 0.001 s
Dead Source Function:	None, LB & DL, DB & LL, DB & DL, DB OR DL, DB XOR DL
Dead/Live Levels for Bus and Line:	0.00 to 1.50 x VT in steps of 0.01 x VT

17.3.4 BREAKER CONTROL

BREAKER CONTROL	
Operation:	Asserted FlexLogic Operands
Function:	Opens/closes, blocks, bypasses blocks to the feeder breaker

17.3.5 LOCAL CONTROL MODE

LOCAL CONTROL MODE	
Number of Elements:	1
Select Before Operate Mode:	Disabled, Enabled
Mode:	Local Mode ON, Local Mode OFF
Display Status:	LM (local mode) displayed in banner
Tagging:	Disabled, Enabled

17.3.6 SWITCH CONTROL

SWITCH CONTROL	
Operation:	Local (PB control and SLD) and Remote (asserted FlexLogic operands)
Function:	Opens/Closes the disconnect switch
Timers:	0.000 to 6000.000 s in steps of 0.001 s

17.3.7 TRIP BUS

TRIP BUS	
Number of Elements:	6
Number of Inputs:	16
Pickup Time Delay:	0.000 to 6000.000 s in steps of 0.001 s
Dropout Time Delay:	0.000 to 6000.000 s in steps of 0.001 s
Operate Time:	< 2 ms at 60 Hz
Timer Accuracy:	±3% of delay time or ±¼ cycle (whichever is greater) from pickup to operate

17.4 MONITORING

17.4.1 FREQUENCY OOB ACCUMULATION

FREQUENCY OOB ACCUMULATION	
Frequency OOB Accumulation:	7 sets; 5.00 to 70.00 Hz in steps of 0.01 Hz
Frequency OOB Accumulation Pickup:	0 to 100000 s in steps of 1 s
Frequency OOB Accumulator Preset:	0 to 100000 s in steps of 1 s
Level Accuracy (for 15 to 70 Hz Band only):	±0.01 Hz
Volt Supervision:	0.10 to 1.25 x VT in steps of 0.01 x VT
Timer Accuracy of Accumulation:	±1% or ±1 s, whichever is greater

17.4.2 BREAKER ARCING CURRENT

BREAKER ARCING CURRENT	
Mode:	3-pole
Principle:	accumulates breaker duty (I^2t) during fault
Initiation:	any operand
Alarm Threshold:	0 to 50000 kA2-cycle in steps of 1 kA2-cycle
Timer Accuracy:	±3% of delay setting or ±1 cycle (whichever is greater) from pickup to operate

17.4.3 BREAKER FAILURE

BREAKER FAILURE	
Mode:	3-pole
Current Supervision:	phase and neutral current (fundamental phasor magnitude)
Current Supervision Pickup:	0.050 to 30.000 x CT in steps of 0.001 x CT
Current Supervision Dropout:	97 to 98% of pickup
Current Supervision Accuracy:	For 0.1 to 2.0 x CT: ±0.5% of reading or ±0.4% of rated (whichever is greater) For > 2.0 x CT: ±1.5% of reading
Time Delay:	0.000 to 6000.000 s in steps of 0.001 s
Timer Accuracy:	±3% of delay setting or ±¼ cycle (whichever is greater) from pickup to operate
Reset Time:	19 to 30 ms at 1.5 to 20 x Pickup

17.4.4 BREAKER HEALTH

BREAKER HEALTH	
Timer Accuracy:	±3% of delay setting or ±1 cycle (whichever is greater) from pickup to operate

17.4.5 TRIP CIRCUIT MONITORING

TRIP CIRCUIT MONITOR (TCM)	
Applicable Voltage:	20 to 250 VDC
Trickle Current:	1 to 2.5 mA
Timing Accuracy:	±3 % or ±4 ms, whichever is greater

17.4.6 CLOSE CIRCUIT MONITORING

CLOSE CIRCUIT MONITOR (CCM)	
Applicable Voltage:	20 to 250 VDC
Trickle Current:	1 to 2.5 mA
Timing Accuracy:	±3 % or ±4 ms, whichever is greater

17.4.7 DEMAND

DEMAND	
Measured Values:	Phase A/B/C present and maximum current, three-phase present, maximum real/reactive/apparent power, minimum real/reactive/apparent power
Measurement Type (845, 850, 889):	Thermal Exponential, 90% response time (programmed): 5, 10, 15, 20, 30 minutes. Block Interval/Rolling Demand, time interval (programmed): 5, 10, 15, 20, 30 minutes
Current Pickup Level (845, 850, 889):	10 to 10000 in steps of 1 A
Dropout Level:	96-98% of Pickup level
Level Accuracy:	±2%

17.4.8 HARMONIC DETECTION

HARMONIC DETECTION	
Operating Parameter:	Current 2nd, 3rd, 4th, 5th harmonic or THD per phase
Timer Accuracy:	Harmonics: ±3% of delay setting or ±¼ cycle (whichever is greater) from pickup to operate. THD: ±3% of delay setting or ±3 cycles (whichever is greater) from pickup to operate

17.5 RECORDING

17.5.1 TRANSIENT RECORDER

TRANSIENT RECORDER	
Default AC Channels:	8 currents + 4 voltages
Configurable Channels:	16 analog and 64 digital channels
Sampling Rate:	128/c, 64/c, 32/c, 16/c, 8/c
Trigger Source:	Any element pickup, dropout or operate, digital input or output change of state, FlexLogic operand
Trigger Position:	0 to 100%
Storage Capability:	Non-volatile memory

17.5.2 DATA LOGGER

DATA LOGGER	
Data Logger channels:	16
Data Logger Rate:	1 cycle, 1 sec., 30 sec., 1 min., 15 min., 30 min., 1 hour, 6 hours, 8 hours, 12 hours, 24 hours
Inputs:	Any analog parameter from the list of available analog parameters
Data Collection Mode:	Continuous, Triggered
Trigger Source:	Any digital flag from the list of digital flags
Trigger Position:	0 to 50% in steps of 1%
Channel 1(16) Mode:	Sample, Min, Max, Mean

17.5.3 EVENT RECORDER

EVENT RECORDER	
Number of events:	1024
Header:	relay name, order code, firmware revision
Content:	any element pickup, any element operate, digital input change of state, digital output change of state, self-test events
Data Storage:	non-volatile memory
Time-tag Accuracy:	to one microsecond

17.5.4 LAST TRIP DATA

LAST TRIP DATA	
Number of Records:	1
Data Storage:	Non-volatile memory
Time-tag Accuracy:	One microsecond
Actuals:	Event Number of Last Trip, Timestamp of Last Trip, Cause of Last Trip, 64 Configurable FlexAnalog values
Commands:	Clear Last Trip Data

17.5.5 FAULT REPORTS

FAULT REPORTS	
Number of Reports:	15
Captured Data:	Pre-fault and fault phasors for all CT and VT banks, pre-fault and fault trigger operands, user-programmable analog channels 1 to 32

17.6 USER-PROGRAMMABLE ELEMENTS

17.6.1 FLEXLOGIC

FLEXLOGIC	
Lines of code:	1024
Supported operations:	NOT, XOR, OR (2 to 16 inputs), AND (2 to 16 inputs), NOR (2 to 16 inputs), NAND (2 to 16 inputs), latch (reset-dominant), edge detectors, timers
Inputs:	any logical variable, contact, or virtual input
Number of timers:	32
Pickup delay:	0 to 60000 (ms, sec., min.) in steps of 1
Dropout delay:	0 to 60000 (ms, sec., min.) in steps of 1
Timer accuracy:	±3% of delay setting or ±¼ cycle (whichever is greater) from pickup to operate

17.6.2 FLEXELEMENTS

FLEXELEMENTS	
Number of elements:	8
Operating signal:	Any analog actual value, or two values in a differential mode
Operating signal mode:	Signed, or Absolute value
Operating mode:	Level, Delta
Comparison direction:	Over, Under
Operate time:	FlexElements are processed once per cycle (16 ms at 60 Hz, 20 ms at 50 Hz)
Pickup Level:	-30.000 to 30.000 pu in steps of 0.001 pu
Hysteresis:	0.1 to 50.0% in steps of 0.1%
Delta dt:	40 msec to 45 days
Pickup and dropout delays:	0.000 to 6000.000 s in steps of 0.001 s

17.6.3 FLEXSTATES

FLEXSTATES	
Number of States:	256 logical variables grouped under 16 Modbus addresses
Programmability:	Any FlexLogic operand, any digital input, any virtual input, any remote input

17.6.4 FLEXCURVES

FLEXCURVES	
Number:	4 (A, B, C, D)
Reset points:	40 (0.00 to 0.98 x pickup)
Operate points:	80 (1.03 to 20.0 x pickup)
Time delay:	0 to 200,000,000 ms in steps of 1 ms

FLEXCURVES	
Saturation level:	20 times the pickup level

17.6.5 NON-VOLATILE LATCHES

NON-VOLATILE LATCHES	
Type:	Set-dominant or Reset-dominant
Range:	16 individually programmed
Output:	Stored in non-volatile memory
Execution sequence:	As input prior to protection, control and FlexLogic

17.6.6 USER-PROGRAMMABLE LEDS

USER-PROGRAMMABLE LEDS	
Number:	17 (14 + 3 PB LEDS)
Programmability:	any logic variable, contact, or virtual input
Reset mode:	self-reset or latched

17.6.7 TAB PUSHBUTTONS

TAB PUSHBUTTONS	
Number of elements:	1 (20 Tab Pushbuttons)
Data Storage:	Non-volatile memory
Mode:	Self-reset, latched
Display Message:	2 lines; 15 characters per line
Dropout Timer:	0.000 to 60.000 s in steps of 0.005
Auto-reset Timer:	0.2 to 600.0 s in steps of 0.1
Hold Timer:	0.1 to 10.0 s in steps of 0.1
Timer Accuracy:	±3% of delay setting or ±¼ cycle (whichever is greater) from pickup to operate

17.6.8 USER-PROGRAMMABLE PUSHBUTTONS

USER-PROGRAMMABLE PUSHBUTTONS	
Number of pushbuttons:	3 (Membrane and Rugged Front Panels)
Mode:	Self-reset, latched
Display message:	2 lines of 13 characters on each line
Dropout timer:	0.000 to 60.000 s in steps of 0.005
Auto-reset timer:	0.2 to 600.0 s in steps of 0.1
Hold timer:	0.0 to 10.0 s in steps of 0.1

17.7 METERING

17.7.1 RMS PARAMETERS

Currents	
Parameters:	Phase A, B, C, Neutral, Ground
Accuracy:	±0.25% of reading or ±0.2% of rated (whichever is greater) from 0.1 to 2.0 x CT±1% of reading > 2.0 x CT

Voltages	
Parameters:	Wye VTs: A-n, B-n, C-n, A-B, B-C, C-A, Average Phase, Neutral and Residual. Delta VTs: A-B, B-C, C-A, Neutral and Residual
Accuracy:	±0.5% of reading from 15 to 208 V±2% for open Delta connections

Sensitive Ground	
Parameter:	Isg
Accuracy (from 0.01 to 0.2 x CT):	±1.30% of rated
Accuracy (> 0.2 x CT):	±0.30% of reading or ±0.60% of rated (whichever is greater)

Real Power (Watts)	
Range:	-214748364.8 kW to 214748364.7 kW
Parameters:	Wye VTs: 3-phase and per phase. Delta VTs: 3-phase only
Accuracy:	±1.0% of reading or 0.2 kW (whichever is greater) at -0.8 < PF ≤ -1.0 and 0.8 < PF < 1.0

Reactive Power (Vars)	
Range:	-214748364.8 kvar to 214748364.7 kvar
Parameters:	Wye VTs: 3-phase and per phase. Delta VTs: 3-phase only
Accuracy:	±1.0% of reading or 0.2 kvar (whichever is greater) at -0.2 < PF ≤ 0.2

Apparent Power (VA)	
Range:	0 kVA to 214748364.7 kVA
Parameters:	Wye VTs: 3-phase and per phase. Delta VTs: 3-phase only
Accuracy:	±1.0% of reading or 0.2 kVA (whichever is greater)

Power Factor	
Parameters:	3-phase; per phase if VT is Wye
Range:	0.01 Lag to 1.00 to 0.01 Lead
Accuracy:	±0.02 for 50 Hz and 60 Hz; ±0.05 for 25 Hz

Watt-hours (positive and negative)	
Range:	0.000 MWh to 4294967.295 MWh
Parameters:	3-phase only
Update Rate:	50 ms
Accuracy:	±2.0% of reading

Var-hours (positive and negative)	
Range:	0.000 Mvarh to 4294967.295 Mvarh
Parameters:	3-phase only
Update Rate:	50 ms
Accuracy:	±2.0% of reading

17.7.2 PHASORS

PHASORS	
Current	
Parameters:	Phase A, B, C, Neutral and Ground
Magnitude Accuracy:	±0.5% of reading or ±0.2% of rated (whichever is greater) from 0.1 to 2.0 x CT ±1.0% of reading > 2.0 x CT
Angle Accuracy:	2° (3° for 25 Hz)
CBCT Angle Accuracy:	±25° (For 50:0.025 CT between 0.5A to 15A)
Voltages	
Parameters:	Wye VTs: A-n, B-n, C-n, A-B, B-C, C-A, Average Phase, Neutral and Residual Delta VTs: A-B, B-C, C-A, Neutral and Residual
Magnitude Accuracy:	±0.5% of reading from 15 to 208 V ±1% for open Delta connections ±10% for 25 Hz with 150 V <V < 208V
Angle Accuracy:	0.5° (15 V <V < 208 V)

17.7.3 FREQUENCY

FREQUENCY	
Range:	2.000 to 90.000 Hz
Accuracy at:	V = 15 to 208 V: ±0.01 Hz (input frequency 15 to 70 Hz); I = 0.1 to 0.4 x CT: ±0.020 Hz (input frequency 15 to 70 Hz); I > 0.4 x CT: ±0.01 Hz (input frequency 15 to 70 Hz)

17.7.4 CURRENT AND VOLTAGE HARMONICS

CURRENT AND VOLTAGE HARMONICS	
Parameters:	Magnitude of each harmonic and THD
Range:	2nd to 25th harmonic: per-phase displayed as % of f_1 fundamental frequency THD: per-phase displayed as % of f_1

17.8 INPUTS

17.8.1 AC CURRENTS

AC CURRENTS	
CT Rated Primary:	1 to 20000 A
CT Rated Secondary:	1 A or 5 A based on relay ordering
Nominal Frequency:	50 Hz and 60 Hz
Burden:	< 0.2 VA at rated secondary
Conversion Range:	Standard CT: 0.02 to 46 x CT rating RMS symmetrical. Sensitive Ground CT module: 0.002 to 4.6 x CT rating RMS symmetrical. CBCT (50:0.025): 0 to 15 A
Short Term CT Withstand:	1 second at 100 x rated current 2 seconds at 40 x rated current Continuous 3 x rated current
CBCT (50:0.025) Withstand:	Continuous 150 mA

17.8.2 AC VOLTAGES

AC VOLTAGE	
VT Range:	10 to 260 V
Nominal Frequency:	20 to 65 Hz
Burden:	<0.25 VA at 120 V
Conversion Range:	1 to 275 V
Voltage Withstand:	continuous at 260 V to neutral. 1 min/hr at 420 V to neutral

17.8.3 ANALOG INPUTS

ANALOG INPUTS	
Current Input (mA DC):	0 to 1mA, 0 to 5mA, 0 to 10mA, 0 to 20mA, 4 to 20mA (configurable)
Input Impedance:	375 Ω ±10%
Conversion range:	0 to +21 mA DC
Accuracy:	±1% of full scale,
Type:	Passive
Sampling Interval:	Typically 500 ms
Cable:	Twisted-pair shielded cable

17.8.4 INPUT FREQUENCY

FREQUENCY	
Nominal frequency setting:	25 Hz, 50 Hz, 60 Hz
Sampling frequency:	64 samples per power cycle. 128 samples per power cycle (available for transient recorder)

FREQUENCY	
Tracking frequency range:	2 to 72 Hz

17.8.5 ARC FLASH SENSOR/FIBER

ARC FLASH SENSOR/FIBER	
Number of Point Sensors:	4
Detection Radius:	180 degrees
Fiber Length (Point Sensor):	18 ft standard, 32 ft maximum
Fiber Size:	1000 um
Mode:	Multi-mode
Connector:	Small Media Interface (SMI)
Fiber Type:	Plastic Optical Fiber
Bend Radius:	>25 mm

17.8.6 CONTACT INPUTS

CONTACT INPUTS	
Number of Inputs:	Based on relay order code
Type:	Wet or Dry
Wet Contacts:	300 VDC maximum
Selectable thresholds:	Programmable: 17 VDC (For 24 VDC Operating Voltage) 33 VDC (For 48 VDC and 60 VDC Operating Voltage) 84 VDC (For 110 VDC and 125 VDC Operating Voltage) 166 VDC (For 220 VDC and 250 VDC Operating Voltage)
Tolerance:	17 VDC: Vlow (off) <10V, Vhigh (on) >19V. 33 VDC: Vlow (off) <23V, Vhigh (on) >38V. 84 VDC: Vlow (off) <70V, Vhigh (on) >88V. 166 VDC: Vlow (off) <140V, Vhigh (on) >176V.
Recognition time:	1 ms (typical)
Debounce time:	0.0 to 16.0 ms in steps of 0.5 ms
Continuous current draw (burden):	2 mA
CLOCK	
Setup:	Date and Time, Daylight Saving Time, UTC (Coordinated Universal Time)
Backup Retention:	31 days
Typical clock drift:	+/- 5minutes per month

Note:
For relays with Hardware Revision A, Clock Backup Retention is only 1 hour

17.8.7 IRIG-B INPUT

IRIG-B INPUT	
Auto-detect:	DC and AM
Amplitude Modulation:	1 V to 10 V pk-to-pk
DC Shift:	TTL

IRIG-B INPUT	
Input Impedance:	40 kΩ
Isolation:	2 kV
IRIG-B Format:	IEEE 1344-1995 (with control bits extension)

17.8.8 RTD INPUTS

RTD INPUTS	
Types (3-wire):	100 Ω Platinum, 120 Ω Nickel, 100 Ω Nickel, 10 Ω Copper (RMIO only supports 100Ω Platinum)
Sensing current:	5 mA
Range:	–40 to +250°C (-40 to +482°F)
Accuracy (onboard):	±2°C (±4°F)
Accuracy (using RMIO):	±3°C (±5.4°F)
Isolation:	36 V pk-pk (a group of RTDs to ground) 2 kV from base unit (RMIO only)
Lead Resistance:	25 Ω max. per lead for platinum or nickel and 3 Ω max. per lead for copper RTDs
RTD Inputs Available:	6 RTD inputs with one module or 12 inputs with 2 modules (IO cards R or S). 1 RTD input with IO card L.6 to 12 RTD inputs with RMIO modules 1 through 4
Cable:	Three-wire shielded cable

17.9 OUTPUTS

17.9.1 ANALOG OUTPUTS

ANALOG OUTPUTS	
Range (configurable):	0 to 1 mA, 0 to 5 mA, 0 to 10 mA, 0 to 20 mA, 4 to 20 mA
Max. load resistance:	10 kΩ @ 1 mA, 600 Ω @ 20 mA
Accuracy:	±1% of full scale
Isolation:	500V DC for one minute (functional isolation between analog inputs and output group; and each group of chassis)
Driving Signal:	any Analog quantity
Sampling Interval:	Typically 100 ms
Upper and lower limit (for the driving signal):	-90 to 90 pu in steps of 0.001
Cable:	Twisted-pair shielded cable

17.9.2 FORM C OUTPUT RELAYS

FORM C OUTPUT RELAYS	
Maximum Working Voltage:	300VDC/300VAC
Make and short-time carry current:	30A/0.2s per IEEE C37.90
Maximum Continuous Current per contact:	10A
Total maximum current for contacts connected to common potential:	10A
Breaking Capacity (DC inductive) with respect to source voltage, @L/R = 40 ms (10000 Operation, per IEC 60255-1 2009-08):	24 V-1 A; 48 V-0.5 A; 125 V-0.3 A; 250 V-0.2 A
Breaking Capacity (DC resistive) with respect to source voltage:	24 V-10 A; 48 V-1.5 A; 125 V-0.4 A; 250 V-0.3 A
Breaking Capacity (AC inductive) with respect to source voltage, @PF= 0.4 or less:	A300, Pilot duty 720 VA
Breaking Capacity (AC resistive) with respect to source voltage:	277V-10A
Operating Time (coil energization to contact closure, resistive load):	<8ms
Contact Material:	Silver alloy
Mechanical Endurance (no load):	> 10,000
Maximum Frequency of operation:	360/h
Protection Device across contact:	EMI Suppression Cap, 1nF

Note:
For order codes with a combined total of 2 or 3 type A and M I/O cards, the following ratings are applied to meet UL508 requirements: 1 second on / 10 seconds off, 9% duty cycle

17.9.3 FORM A VOLTAGE MONITOR

FORM-A VOLTAGE MONITOR	
Applicable voltage:	20 to 250 VDC
Trickle current:	1 to 2.5 mA
Timer accuracy:	±3% of operate time or ±¼ cycle (whichever is greater)

17.9.4 SOLID STATE RELAYS

SOLID STATE RELAYS ON I/O CARD M	
Maximum Working Voltage:	300 VDC
Make and short-time carry current:	30A/0.2 s per IEEE C37.90
Maximum Continuous Current per contact:	10 A
Total maximum current for contacts connected to common potential:	10 A
Breaking Capacity (DC inductive) with respect to source voltage, @L/R = 40 ms (10000 Operation, per IEC 60255-1 2009-08):	250 VDC - 10 A (or 2.5 kW) (Maximum 10 A and 300 VDC)
Breaking Capacity (DC resistive) with respect to source voltage:	250 V - 30 A (or 7500 W)
Breaking Capacity (AC inductive) with respect to source voltage, @PF= 0.35 or less:	N/A
Breaking Capacity (AC resistive) with respect to source voltage:	N/A
Operating Time (coil energization to contact closure, resistive load):	<0.2 ms
Contact Material:	Hybrid
Mechanical Endurance (no load):	> 10,000
Maximum Frequency of operation:	360/h
Protection Device across contact:	MO V, rated @ 250 VAC/320 VDC

17.9.5 PULSED OUTPUTS

PULSED OUTPUTS	
Mode:	3-phase positive and negative active energy measurement, 3-phase positive and negative reactive energy measurements
Principle:	Pulsed output is energized for one second and then de-energized for one second after the programed energy increment.

17.9.6 COIL ACTUATOR OUTPUTS

COIL ACTUATOR OUTPUTS	
No. of Coil Actuators:	3 (1 per phase)
Open Maximum Current:	5 to 20 A
Close Maximum Current:	5 to 20 A
Open Pulse Time:	15 to 100 ms
Close Pulse Time:	15 to 100 ms
Operate Time:	< 8 ms

COIL ACTUATOR OUTPUTS	
Intervals between full sequence operation:	Minimum 60 s between two consecutive full sequence operations. Minimum 30 mins after 6 consecutive full sequence operations with minimum interval.

17.10 POWER SUPPLY

17.10.1 VOLTAGE SUPPLIES

(FOR H AND R OPTIONS ONLY)	
Nominal DC Voltage:	125 to 250 V
Minimum DC Voltage:	88 V
Maximum DC Voltage:	300 V
Nominal AC Voltage:	100 to 240 V at 50/60 Hz
Minimum AC Voltage:	88 V at 50 to 60 Hz
Maximum AC Voltage:	265 V at 50 to 60 Hz

(FOR L DC OPTION ONLY) (not in 859)	
Nominal DC Voltage:	24 V to 48 V
Minimum DC Voltage:	20 V
Maximum DC Voltage:	60 V

17.10.2 POWER CONSUMPTION

POWER CONSUMPTION	
Typical:	20 W / 40 VA
Maximum:	34 W / 70 VA

17.10.3 VOLTAGE LOSS RIDE-THROUGH

VOLTAGE LOSS RIDE THROUGH	
Typical (at typical power consumption):	50 ms
For R order code:	200 ms

17.11 COMMUNICATIONS

17.11.1 ETHERNET

ETHERNET – BASE OFFERING (“SE” OPTION)	
Modes:	10/100 Mbps
One Port:	RJ45
Protocol:	Modbus TCP, DNP
Cable type:	CAT 5 or CAT 6 Shielded Twisted Pair

ETHERNET – CARD OPTION “C” - 2X COPPER (RJ45) PORTS	
Modes:	10/100 MB
Two Ports:	RJ45 (with this option both enabled ports are on the communications card; the Ethernet port located on the base CPU is disabled)
Protocols:	Modbus TCP, DNP3.0, IEC60870-5-104, IEC 61850 Ed.2, IEC 61850 Ed.2 GOOSE, IEEE 1588 (PTP version 2), SNTP, IEC 62439-3 clause 4 (PRP)

ETHERNET – CARD OPTION “S” - 2X ST FIBER PORTS	
Fiber type:	100 MB Multi-mode
Two Ports:	ST (with this option both enabled ports are on the communications card; the Ethernet port located on the base CPU is disabled)
Protocols:	Modbus TCP, DNP3.0, IEC60870-5-104, IEC 61850 Ed.2, IEC 61850 Ed.2 GOOSE, IEEE 1588 (PTP version 2), SNTP, IEC 62439-3 clause 4 (PRP), OPC-UA
Wavelength:	1310nm
Typical link distance:	4 km

17.11.2 USB

USB	
Standard specification:	Compliant with USB 2.0
Protocols:	Modbus TCP, TFTP

17.11.3 SERIAL

SERIAL	
RS485 port:	Isolated
Baud rates:	Supports 9600, 19200, 38400, 57600, and 115200 kbps
Response time:	10 ms typical
Parity:	None, Odd, Even
Protocol:	Modbus RTU, DNP 3.0, IEC 60870-5-103
Maximum distance:	1200 m (4000 feet)
Isolation:	2 kV

SERIAL	
Cable:	24 AWG stranded, shielded twisted-pair

17.11.4 WIFI

WIFI	
Standard specification:	IEEE802.11bgn
Range:	30 ft (direct line of sight)

17.11.5 REMOTE MODBUS

REMOTE MODBUS DEVICE PROFILE	
Device Name:	BSG3 (13 alphanumeric characters maximum)
IP Address:	0.0.0.0 – standard Ethernet address
Slave Address:	254 (1 to 254)
Modbus Port:	502 (0 to 10000, default 502)
Poll Rate:	1 minute (OFF, 1 to 120 minutes), the continuous mode poll interval is defined as the poll rate interval
Trigger:	Off (any FlexLogic Operand), the trigger mode is based on the FlexLogic operand designed to trigger the poll

17.11.6 CONTROLLER AREA NETWORK

CAN (RMIO)	
Maximum Distance:	250 m (820 ft)
Cable Type:	Shielded twisted pair
Cable Gauge:	24 AWG for distances up to 100m; 22 AWG for distances up to 250 m.

17.12 CERTIFICATIONS AND APPROVALS

17.12.1 APPROVALS

	APPLICABLE COUNCIL DIRECTIVE	ACCORDING TO
CE compliance	Low voltage directive	EN60255-27
	EMC Directive	EN60255-26
	R&TTE Directive	ETSI EN300 328, ETSI EN301 489-1, ETSI EN301-489-17,
	RoHS Directive	RoHS Directive 2011/65/EU, 2015/863
North America	cULus	UL508, e57838 NKCR, NRGU
		CSA C22.2.No 14, e57838 NKCR7, NRGU7
ISO	Manufactured under a registered quality program	ISO9001

17.12.2 TESTING AND CERTIFICATION

Testing and Certification

TEST	REFERENCE STANDARD	TEST LEVEL
Dielectric voltage withstand	EN60255-5/IEC60255-27	2.3 kV
Impulse voltage withstand	EN60255-5/IEC60255-27	5 kV
Insulation resistance	IEC60255-27	500 VDC
Damped Oscillatory	IEC61000-4-18	2.5 kV CM, 1 kV DM, 1 MHz
Electrostatic Discharge	EN61000-4-2	Level 4
RF immunity	EN61000-4-3	Level 3
Fast Transient Disturbance	EN61000-4-4	Class A and B
Surge Immunity	EN61000-4-5	Level 3
Conducted RF Immunity	EN61000-4-6	Level 3
Power Frequency Immunity	IEC60255-26	Class A & B
Voltage variation, interruption and Ripple DC	IEC60255-26	PQT levels based on IEC61000-4-29, IEC61000-4-11 and IEC61000-4-17
Radiated & Conducted Emissions	CISPR11 /CISPR22	Class A
Sinusoidal Vibration	IEC60255-21-1	Class 1
Shock & Bump	IEC60255-21-2	Class 1
Seismic	IEC60255-21-3	Class 2
Power magnetic Immunity	IEC61000-4-8	Level 5
Pulse Magnetic Immunity	IEC61000-4-9	Level 4
Damped Magnetic Immunity	IEC61000-4-10	Level 4
Voltage Dip & interruption	IEC61000-4-11	0, 40, 70, 80% dips, 250/300 cycle interrupts
Harmonic Immunity	IEC61000-4-13	Class 3
Conducted RF Immunity 0-150kHz	IEC61000-4-16	Level 4
Ingress Protection	IEC60529	IP54 front

TEST	REFERENCE STANDARD	TEST LEVEL
Environmental (Cold)	IEC60068-2-1	-40C 16 hrs
Environmental (Dry heat)	IEC60068-2-2	85C 16hrs
Relative Humidity Cyclic	IEC60068-2-30	6 day humidity variant 2
EFT	IEEE/ANSI C37.90.1	4kV, 5 kHz
Damped Oscillatory	IEEE/ANSI C37.90.1	2.5 kV, 1 MHz
Dielectric Between contacts	IEEE C37.90	1500Vrms
Make and Carry	IEEE C37.90	30A /200 ops
Electrostatic Discharge (ESD)	IEEE/ANSI C37.90.3	8kV DC/ 15 kV AD
Product Safety	IEC60255-27	As per standard
Rated Burden,	IEC60255-1	Sec 6.10
Contact Performance	IEC60255-1	Sec 6.11

Note:
May contain components with FCC ID: XF6-RS9110N1122 and IC ID: 8407A-RS9110N1122

17.13 ENVIRONMENTAL

AMBIENT TEMPERATURES	
Storage/Shipping:	-40°C to 85°C
Operating:	-40°C to 60°C
Humidity	Operating up to 95% (non condensing) @ 55°C (As per IEC60068-2-30 Variant 2, 6 days)
Altitude:	2000m (standard base reference evaluated altitude) 5000m (maximum achievable altitude)
Pollution Degree:	II
Overvoltage Category:	II
Ingress Protection:	IP54 Front (845,850, 869, 889) IP 50 Front (859)
Insulation Class:	1
Noise:	0 dB

17.14 LONG-TERM STORAGE

The device should be stored in an environment that is dry, corrosive-free, and not in direct sunlight.

Correct storage will prevent premature component failures caused by environmental factors such as moisture or corrosive gases. Exposure to high humidity or corrosive environments will prematurely degrade the electronic components in any electronic device regardless of its use or manufacturer, unless specific precautions, such as those mentioned in the Environmental section, are taken.

We recommend that you power up all stored relays once per year, for one hour continuously, to avoid deterioration of electrolytic capacitors and subsequent relay failure.

APPENDIX A

APPENDIX A

1 WARRANTY

For products shipped as of 1 October 2013, GE Digital Energy warrants most of its GE manufactured products for 10 years. For warranty details including any limitations and disclaimers, see the GE Digital Energy Terms and Conditions on the GE website.

For products shipped before 1 October 2013, the standard 24-month warranty applies.

2 REVISION HISTORY

MANUAL PART NUMBER	RELEASE DATE
1601-0320-A1	March 2016
1601-0320-A2	December 2016
1601-0320-A3	July 2017
1601-0320-A4	February 2018
1601-0320-A5	March 2018
1601-0320-A6	July 2018
1601-0320-A7	December 2018
1601-0320-A8	May 2019
1601-0320-A9	January 2020
1601-0320-AA	August 2020
1601-0320-AB	June 2021
1601-0320-AC	December 2022

For information on the updates included in this release of the Instruction Manual, please refer to the latest release notes online.

GE VERNOVA

Imagination at work

GE Vernova
650 Markland Street
Markham, Ontario
Canada L6C 0M1
+1 905-927-7070
contact.centre@ge.com

© 2023 GE Vernova. All rights reserved. Information contained in this document is indicative only. No representation or warranty is given or should be relied on that it is complete or correct or will apply to any particular project. This will depend on the technical and commercial circumstances. It is provided without liability and is subject to change without notice. Reproduction, use or disclosure to third parties, without express written authority, is strictly prohibited.