GE VERNOVA

B30

Bus Differential System

Instruction Manual

Product version: 7.4x

Publication reference: 1601-0109-AE4

E83849

LISTED
IND.CONT. EQ.
52TL

Copyright © 2025 GE Vernova. All rights reserved.

GridBeats, Universal Relay, Multilin, MiCOM, S1 Agile, P40 Agile, DS Agile, EnerVista, CyberSentry, HardFiber, FlexLogic, FlexElement, FlexCurve, FlexAnalog, FlexInteger and FlexState are trademarks or registered trademarks of GE Vernova.

The contents of this manual are the property of GE Vernova. This documentation is furnished on license and may not be reproduced in whole or in part without the permission of GE Vernova. The content of this manual is for informational use only and is subject to change without notice.

It is the responsibility of the user for verifying and validating the suitability of all GE Vernova products. This equipment must be used within its design limits. The proper application including configuration and setting of this product to suit the power system assets is the responsibility of the user, who is also required to ensure that all local or regional safety guidelines are adhered to. Incorrect application of this product could risk damage to property/the environment, personal injuries or fatalities and shall be the sole responsibility of the person/entity applying and qualifying the product for use.

The content in this document has been developed to provide guidance to properly install, configure and maintain this product for its intended applications. This guidance is not intended to cover every possible contingency that may arise during commissioning, operation, service, or maintenance activities. Should you encounter any circumstance's not clearly addressed in this document, contact your local GE Vernova service site.

IT IS THE SOLE RESPONSIBILITY OF THE USER TO SECURE THEIR NETWORK AND ASSOCIATED DEVICES AGAINST CYBER SECURITY INTRUSIONS OR ATTACKS. GE VERNOVA AND ITS AFFILIATES ARE NOT LIABLE FOR ANY DAMAGES AND/OR LOSSES ARISING FROM OR RELATED TO SUCH SECURITY INTRUSION OR ATTACKS.

B30 Bus Differential System

Table of contents

1 INTRODUCTION
1.1 Safety symbols and definitions 1-1
1.1.1 General cautions and warnings 1-1
1.2 For further assistance 1-2

2 PRODUCT DESCRIPTION
2.1 Product description 2-1
2.1.1 Overview 2-1
2.2 Security 2-4
2.3 Order codes 2-8
2.3.1 Order codes with enhanced CT/VT modules 2-8
2.3.2 Order codes with process bus modules 2-11
2.3.3 Replacement modules 2-14
2.4 Signal processing 2-16
2.4.1 UR signal processing 2-16
2.5 Specifications 2-18
2.5.1 Protection elements 2-18
2.5.2 User-programmable elements 2-21
2.5.3 Monitoring 2-22
2.5.4 Metering 2-23
2.5.5 Inputs 2-24
2.5.6 Power supply 2-25
2.5.7 Outputs 2-26
2.5.8 Communication protocols 2-28
2.5.9 Inter-relay communications 2-29
2.5.10 CyberSentry security 2-30
2.5.11 Environmental 2-30
2.5.12 Type tests 2-32
2.5.13 Production tests 2-32
2.5.14 Approvals 2-33
2.5.15 Maintenance 2-33

3 INSTALLATION
3.1 Unpack and inspect 3-1
3.2 Panel cutouts 3-2
3.2.1 Horizontal units 3-2
3.2.2 Vertical units 3-6

3.2.3 Rear terminal layout 3-11
3.3 Wiring 3-13
3.3.1 Typical wiring 3-13
3.3.2 Dielectric strength 3-14
3.3.3 Control power 3-14
3.3.4 CT/VT modules 3-15
3.3.5 Process bus modules 3-17
3.3.6 Contact inputs and outputs 3-17
3.3.7 Transducer inputs and outputs 3-29
3.3.8 RS232 faceplate port 3-31
3.3.9 CPU communication ports 3-32
3.3.10 IRIG-B 3-33
3.4 Direct input and output communications 3-34
3.4.1 Description 3-34
3.4.2 Fiber: LED and ELED transmitters 3-37
3.4.3 Fiber laser transmitters 3-37
3.4.4 G.703 interface 3-38
3.4.5 RS422 interface 3-42
3.4.6 RS422 and fiber interface 3-44
3.4.7 G.703 and fiber interface 3-45
3.4.8 IEEE C37.94 interface 3-45
3.4.9 C37.94SM interface 3-48
3.5 Activate relay 3-51
3.6 Install software 3-52
3.6.1 EnerVista communication overview 3-52
3.6.2 System requirements 3-53
3.6.3 Install software 3-54
3.7 Add device to software 3-55
3.7.1 Set IP address in UR 3-55
3.7.2 Configure serial connection 3-61
3.7.3 Configure Ethernet connection 3-62
3.7.4 Configure modem connection 3-64
3.7.5 Automatic discovery of UR devices 3-64
3.8 Connect to the B30 3-65
3.8.1 Connect to the B30 in EnerVista 3-65
3.8.2 Use Quick Connect via the front panel RS232 port 3-66
3.8.3 Use Quick Connect via a rear Ethernet port 3-67
3.9 Set up CyberSentry and change default password 3-67
3.10 Import settings 3-68

4 INTERFACES
4.1 EnerVista software interface 4-1
4.1.1 Introduction 4-1
4.1.2 Settings files 4-1
4.1.3 Event viewing 4-2
4.1.4 File support 4-3
4.1.5 EnerVista main window 4-3
4.1.6 Protection summary window 4-4
4.1.7 Settings templates 4-5
4.1.8 Secure and lock FlexLogic equations 4-9
4.1.9 Settings file traceability 4-12
4.2 Front panel interface 4-15
4.2.1 Front panel display 4-15
4.2.2 Front panel keypad 4-16
4.2.3 Menu navigation 4-16

4.2.4 Menu hierarchy 4-16
4.2.5 Changing settings 4-17
4.2.6 Faceplate 4-19
4.2.7 LED indicators 4-20
4.2.8 Custom LED labeling 4-23
4.2.9 Breaker control 4-28
4.2.10 Change passwords 4-29
4.2.11 Invalid password entry 4-30
4.3 Logic diagrams 4-30
4.4 FlexLogic design and monitoring using Engineer 4-32
4.4.1 Design logic 4-34
4.4.2 Send file to and from device 4-44
4.4.3 Monitor logic 4-45
4.4.4 View front panel and print labels 4-46
4.4.5 Generate connectivity report 4-47
4.4.6 Preferences 4-47
4.4.7 Toolbars 4-51

5 SETTINGS
5.1 Settings menu 5-1
5.2 Overview 5-4
5.2.1 Introduction to elements 5-4
5.2.2 Introduction to AC sources 5-5
5.3 Product setup 5-7
5.3.1 Security 5-7
5.3.2 Display properties 5-25
5.3.3 Clear relay records 5-26
5.3.4 Communications 5-27
5.3.5 Modbus user map 5-95
5.3.6 Real-time clock 5-95
5.3.7 User-programmable fault report 5-100
5.3.8 Oscillography 5-101
5.3.9 Data logger 5-103
5.3.10 Demand 5-104
5.3.11 User-programmable LEDs 5-106
5.3.12 User-programmable self-tests 5-109
5.3.13 Control pushbuttons 5-110
5.3.14 User-programmable pushbuttons 5-111
5.3.15 Flex state parameters 5-116
5.3.16 User-definable displays 5-117
5.3.17 Direct inputs and outputs 5-119
5.3.18 Teleprotection 5-125
5.3.19 Installation 5-126
5.4 Remote resources 5-127
5.4.1 Remote resources configuration 5-127
5.5 System setup 5-128
5.5.1 AC inputs 5-128
5.5.2 Power system 5-129
5.5.3 Signal sources 5-130
5.5.4 Breakers 5-132
5.5.5 Disconnect switches 5-137
5.5.6 FlexCurves 5-140
5.5.7 Bus 5-147
5.6 FlexLogic 5-148
5.6.1 FlexLogic operands 5-148
5.6.2 FlexLogic rules 5-158

5.6.3 FlexLogic evaluation 5-158
5.6.4 FlexLogic example 5-159
5.6.5 FlexLogic equation editor 5-164
5.6.6 FlexLogic timers 5-164
5.6.7 FlexElements 5-164
5.6.8 Non-volatile latches 5-168
5.7 Grouped elements 5-169
5.7.1 Overview 5-169
5.7.2 Setting group 1 5-169
5.7.3 Bus differential 5-170
5.7.4 Phase current 5-174
5.7.5 Neutral current 5-186
5.7.6 Ground current 5-189
5.7.7 Breaker failure (ANSI 50BF) 5-192
5.7.8 Voltage elements 5-201
5.8 Control elements 5-206
5.8.1 Overview 5-206
5.8.2 Trip bus 5-206
5.8.3 Setting groups 5-208
5.8.4 Selector switch 5-209
5.8.5 Digital elements 5-216
5.8.6 Digital counters 5-219
5.8.7 Monitoring elements 5-221
5.9 Inputs/outputs 5-236
5.9.1 Contact inputs 5-236
5.9.2 Virtual inputs 5-238
5.9.3 Contact outputs 5-239
5.9.4 Virtual outputs 5-243
5.9.5 Resetting 5-243
5.9.6 Direct inputs and outputs 5-243
5.9.7 Teleprotection 5-247
5.10 Transducer inputs/outputs 5-249
5.10.1 DCmA inputs 5-249
5.10.2 RTD inputs 5-250
5.10.3 DCmA outputs 5-251
5.11 Testing 5-254
5.11.1 Test mode function 5-254
5.11.2 Test mode forcing 5-255
5.11.3 Force contact inputs 5-255
5.11.4 Force contact outputs 5-256

6 ACTUAL VALUES
6.1 Actual Values menu 6-1
6.2 Front panel 6-3
6.3 Status 6-4
6.3.1 Contact inputs 6-4
6.3.2 Virtual inputs 6-4
6.3.3 RxGOOSE boolean inputs 6-4
6.3.4 RxGOOSE DPS inputs 6-4
6.3.5 Teleprotection inputs 6-5
6.3.6 Contact outputs 6-5
6.3.7 Virtual outputs 6-5
6.3.8 RxGOOSE status 6-6
6.3.9 RxGOOSE statistics 6-6
6.3.10 Digital counters 6-6
6.3.11 Selector switches 6-7

6.3.12 Flex States ... 6-7
6.3.13 Ethernet ... 6-7
6.3.14 Real time clock synchronizing ... 6-7
6.3.15 Direct inputs ... 6-8
6.3.16 Direct devices status ... 6-9
6.3.17 EGD protocol status ... 6-9
6.3.18 Teleprotection channel tests ... 6-9
6.3.19 Remaining connection status ... 6-10
6.3.20 Parallel Redundancy Protocol (PRP) ... 6-10
6.3.21 TxGOOSE status ... 6-11
6.4 Metering ... 6-12
6.4.1 Metering conventions ... 6-12
6.4.2 Bus zone ... 6-16
6.4.3 Sources ... 6-16
6.4.4 Tracking frequency ... 6-21
6.4.5 FlexElements ... 6-21
6.4.6 RxGOOSE analogs ... 6-22
6.4.7 Transducer inputs and outputs ... 6-22
6.5 Records ... 6-22
6.5.1 User-programmable fault reports ... 6-22
6.5.2 Event records ... 6-23
6.5.3 Oscillography ... 6-24
6.5.4 Data logger ... 6-24
6.5.5 Breaker maintenance ... 6-24
6.6 Product information ... 6-25
6.6.1 Model information ... 6-25
6.6.2 Firmware revisions ... 6-26

7 COMMANDS AND TARGETS
7.1 Commands menu ... 7-1
7.1.1 Virtual inputs ... 7-2
7.1.2 Clear records ... 7-2
7.1.3 Set date and time ... 7-3
7.1.4 Relay maintenance ... 7-3
7.1.5 Security ... 7-4
7.2 Targets menu ... 7-4
7.2.1 Target messages ... 7-5
7.2.2 Relay self-tests ... 7-5

8 APPLICATION OF SETTINGS
8.1 Overview ... 8-1
8.1.1 Introduction ... 8-1
8.1.2 Sample busbar and data ... 8-2
8.2 Zoning and dynamic bus replica ... 8-3
8.2.1 Description ... 8-3
8.2.2 North bus zone ... 8-3
8.2.3 South bus zone ... 8-4
8.3 Biased characteristic breakpoints ... 8-5
8.3.1 Description ... 8-5
8.3.2 High breakpoint ... 8-6
8.3.3 Low breakpoint ... 8-6
8.4 Slopes and high set threshold ... 8-7
8.4.1 Description ... 8-7
8.4.2 External faults on C-1 ... 8-7
8.4.3 External faults on C-2 ... 8-9
8.4.4 External faults on C-3 ... 8-9

8.4.5 External faults on C-4 8-10
8.4.6 External faults on C-5 8-10
8.5 Bus differential settings 8-11
8.5.1 Description 8-11
8.6 Enhancing relay performance 8-12
8.6.1 Using setting groups 8-12

9 THEORY OF OPERATION
9.1 Introduction 9-1
9.1.1 Bus differential protection 9-1
9.2 Dynamic bus replica 9-3
9.2.1 Dynamic bus replica mechanism 9-3
9.2.2 CT ratio matching 9-4
9.3 Differential principle 9-5
9.3.1 Biased differential characteristic 9-5
9.3.2 Differential and restraining currents 9-6
9.3.3 Enhanced security 9-6
9.4 Directional principle 9-7
9.4.1 Current directional protection 9-7
9.5 Saturation detector 9-9
9.5.1 CT saturation detection 9-9
9.6 Output logic and examples 9-10
9.6.1 Output logic 9-10
9.6.2 Internal and external fault example 9-11

10 MAINTENANCE
10.1 Monitoring 10-1
10.1.1 Devices with Site Targets 10-1
10.1.2 Data with Modbus Analyzer 10-1
10.2 General maintenance 10-3
10.2.1 In-service maintenance 10-3
10.2.2 Out-of-service maintenance 10-3
10.2.3 Unscheduled maintenance (system interruption) 10-3
10.3 Retrieve files 10-3
10.3.1 CyberSentry security event files 10-4
10.4 Convert device settings 10-5
10.5 Copy settings to other device 10-7
10.6 Compare settings 10-7
10.6.1 Compare against defaults 10-7
10.6.2 Compare two devices 10-7
10.7 Back up and restore settings 10-8
10.7.1 Back up settings 10-8
10.7.2 Restore settings 10-10
10.8 Upgrade software 10-13
10.9 Upgrade firmware 10-13
10.10 Replace module 10-15
10.11 Battery 10-16
10.11.1 Replace battery 10-17
10.11.2 Dispose of battery 10-18
10.12 Uninstall and clear files and data 10-21
10.13 Repairs 10-21
10.14 Storage 10-22
10.15 Disposal 10-22

A FLEXANALOG OPERANDS
A.1 FlexAnalog items A-1

B RADIUS SERVER CONFIGURATION
B.1 RADIUS server configuration B-1

C COMMAND LINE INTERFACE
C.1 Command line interface C-1

D MISCELLANEOUS
D.1 Warranty D-1
D.2 Revision history D-1

ABBREVIATIONS

INDEX

B30 Bus Differential System

Chapter 1: Introduction

This chapter outlines safety and technical support information.

1.1 Safety symbols and definitions

Before attempting to install or use the device, review all safety indicators in this document to help prevent injury, equipment damage, or downtime.

The following safety and equipment symbols are used in this document.

DANGER **Indicates a hazardous situation which, if not avoided, will result in death or serious injury.**

WARNING **Indicates a hazardous situation which, if not avoided, could result in death or serious injury.**

CAUTION **Indicates a hazardous situation which, if not avoided, could result in minor or moderate injury.**

NOTICE Indicates practices not related to personal injury.

1.1.1 General cautions and warnings

The following general safety precautions and warnings apply.

DANGER **Ensure that all connections to the product are correct so as to avoid accidental risk of shock and/or fire, for example such as can arise from high voltage connected to low voltage terminals.**

Follow the requirements of this manual, including adequate wiring size and type, terminal torque settings, voltage, current magnitudes applied, and adequate isolation/clearance in external wiring from high to low voltage circuits.

Use the device only for its intended purpose and application.

Ensure that all ground paths are uncompromised for safety purposes during device operation and service.

Ensure that the control power applied to the device, the AC current, and voltage input match the ratings specified on the relay nameplate. Do not apply current or voltage in excess of the specified limits.

Only qualified personnel are to operate the device. Such personnel must be thoroughly familiar with all safety cautions and warnings in this manual and with applicable country, regional, utility, and plant safety regulations.

Hazardous voltages can exist in the power supply and at the device connection to current transformers, voltage transformers, control, and test circuit terminals. Make sure all sources of such voltages are isolated prior to attempting work on the device.

Hazardous voltages can exist when opening the secondary circuits of live current transformers. Make sure that current transformer secondary circuits are shorted out before making or removing any connection to the current transformer (CT) input terminals of the device.

For tests with secondary test equipment, ensure that no other sources of voltages or currents are connected to such equipment and that trip and close commands to the circuit breakers or other switching apparatus are isolated, unless this is required by the test procedure and is specified by appropriate utility/plant procedure.

When the device is used to control primary equipment, such as circuit breakers, isolators, and other switching apparatus, all control circuits from the device to the primary equipment must be isolated while personnel are working on or around this primary equipment to prevent any inadvertent command from this device.

Use an external disconnect to isolate the mains voltage supply.

Personal safety can be affected if the product is physically modified by the end user. Modifications to the product outside of recommended wiring configuration, hardware, or programming boundaries is not recommended end-use practice. Product disassembly and repairs are not permitted. All service needs to be conducted by the factory.

⚠CAUTION **LED transmitters are classified as IEC 60825-1 Accessible Emission Limit (AEL) Class 1M. Class 1M devices are considered safe to the unaided eye. Do not view directly with optical instruments.**

NOTICE This product is rated to Class A emissions levels and is to be used in Utility, Substation Industrial environments. Not to be used near electronic devices rated for Class B levels.

1.2 For further assistance

For product support, contact the information and call center as follows:

GE Grid Solutions
650 Markland Street
Markham, Ontario
Canada L6C 0M1
Worldwide telephone: +1 905 927 7070
Europe/Middle East/Africa telephone: +34 94 485 88 54
North America toll-free: 1 800 547 8629
Fax: +1 905 927 5098
Worldwide e-mail: multilin.tech@ge.com
Europe e-mail: multilin.tech.euro@ge.com
Website: http://www.gegridsolutions.com/multilin

When contacting GE by e-mail, optionally include a device information file, which is generated in the EnerVista software by clicking the **Service Report** button.

Figure 1-1: Generate service report

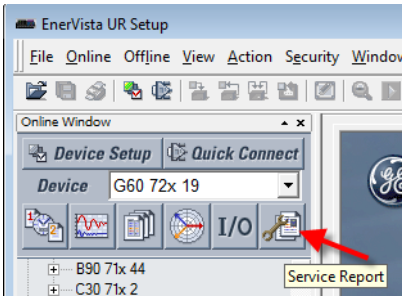

B30 Bus Differential System

Chapter 2: Product description

This chapter outlines the product, order codes, and specifications.

2.1 Product description

2.1.1 Overview

The B30 Bus Differential System is part of the Universal Relay (UR) series of products. It is a microprocessor-based relay that provides protection and metering for a busbar with up to six feeders. Protection is provided by a low impedance percent differential element with features that make it immune to current transformer (CT) saturation. Both biased (restrained) and unbiased (unrestrained) differential protection functions are provided.

A dynamic busbar replica mechanism is provided by associating the breaker and switch status signals with the differential zone currents.

The biased bus differential function operates using both the differential and current directional comparison protection principles. The differential element uses a dual-slope dual-breakpoint characteristic with the restraining current formed as a maximum of the input currents for better stability during through-fault conditions and faster operation on internal faults. The current directional comparison principle checks the angular relationship between the currents.

The biased bus differential protection operates in the two-out-of-two mode for low differential currents. This improves stability during CT saturation conditions caused by comparatively low currents combined with unfavorable phenomena, such as multiple auto-reclose actions. For high differential currents, the bus differential element operates using the differential characteristic alone if CT saturation is not detected. Upon CT saturation detection, the relay switches to the two-out-of-two operating mode for better through fault stability.

The B30 typical operating time is about 12 ms for fast form-C output contacts and internal usage by user-programmable logic, and about 15 ms for trip-rated form-A output contacts.

A CT failure alarm function that monitors the level of the differential current is provided. A situation when the differential current stays above a pre-defined level for a pre-defined period of time is declared as a CT trouble event, and an alarm is raised. To prevent false tripping due to CT trouble, undervoltage supervision or an external check zone can be used.

Voltage and current metering are built into the relay as standard features. Current parameters are available as total waveform root mean square (RMS) magnitude, or as fundamental frequency only RMS magnitude and angle (phasor).

B30 devices equipped with CT and VT inputs measure power values.

Diagnostic features include an event recorder capable of storing 1024 time-tagged events and oscillography capable of storing up to 64 records with programmable trigger, content, and sampling rate. The internal clock used for time-tagging can be synchronized with an IRIG-B signal, using the Simple Network Time Protocol (SNTP) over the Ethernet port, or using

the Precision Time Protocol (PTP). This precise time stamping allows the sequence of events to be determined throughout the system. Events can also be programmed (via FlexLogic™ equations) to trigger oscillography data capture that can be set to record the measured parameters before and after the event for viewing on a computer. These tools significantly reduce troubleshooting time and simplify report generation in the event of a system fault.

Several options are available for communication. A faceplate RS232 port can be used to connect to a computer to program settings and monitor actual values. The rear RS485 port allows independent access by operating and engineering staff. It can be connected to system computers with baud rates up to 115.2 kbps. All serial ports use the Modbus RTU protocol. The IEC 60870-5-103 protocol is supported on the RS485 interface. Also only one of the DNP, IEC 60870-5-103, and IEC 60870-5-104 protocols can be enabled at any time on the relay. When the IEC 60870-5-103 protocol is chosen, the RS485 port has a fixed even parity and the baud rate can be either 9.6 kbps or 19.2 kbps. The 100Base-FX or 100Base-TX Ethernet interface provides fast, reliable communications in noisy environments. The Ethernet port supports IEC 61850, Modbus/TCP, TFTP, and PTP (according to IEEE Std. 1588-2008 or IEC 61588), and it allows access to the relay via any standard web browser (B30 web pages). The IEC 60870-5-104 protocol is supported on the Ethernet port. The Ethernet port also supports the Parallel Redundancy Protocol (PRP) of IEC 62439-3 (clause 4, 2012) when purchased as an option.

Secure Routable GOOSE (R-GOOSE) is supported with software options.

Settings and actual values can be accessed from the front panel or EnerVista software.

The B30 uses flash memory technology that allows field upgrading as new features are added. Firmware and software are upgradable.

The following single-line diagram illustrates the relay functionality using American National Standards Institute (ANSI) device numbers.

Table 2-1: ANSI device numbers and functions supported

Device number	Function	Device number	Function
27P	Phase undervoltage	50/87	Unrestrained bus differential
49	Thermal overload protection	51G	Ground time overcurrent
50BF	Breaker failure	51N	Neutral time overcurrent
50DD	Disturbance detector	51P	Phase time overcurrent
50G	Ground instantaneous overcurrent	59N	Neutral overvoltage
50N	Neutral instantaneous overcurrent	59P	Phase overvoltage
50P	Phase instantaneous overcurrent	59X	Auxiliary overvoltage
50/74	CT trouble	67P	Phase directional overcurrent
50G	Ground instantaneous overcurrent	87B	Restrained bus differential

Figure 2-1: Single-line diagram

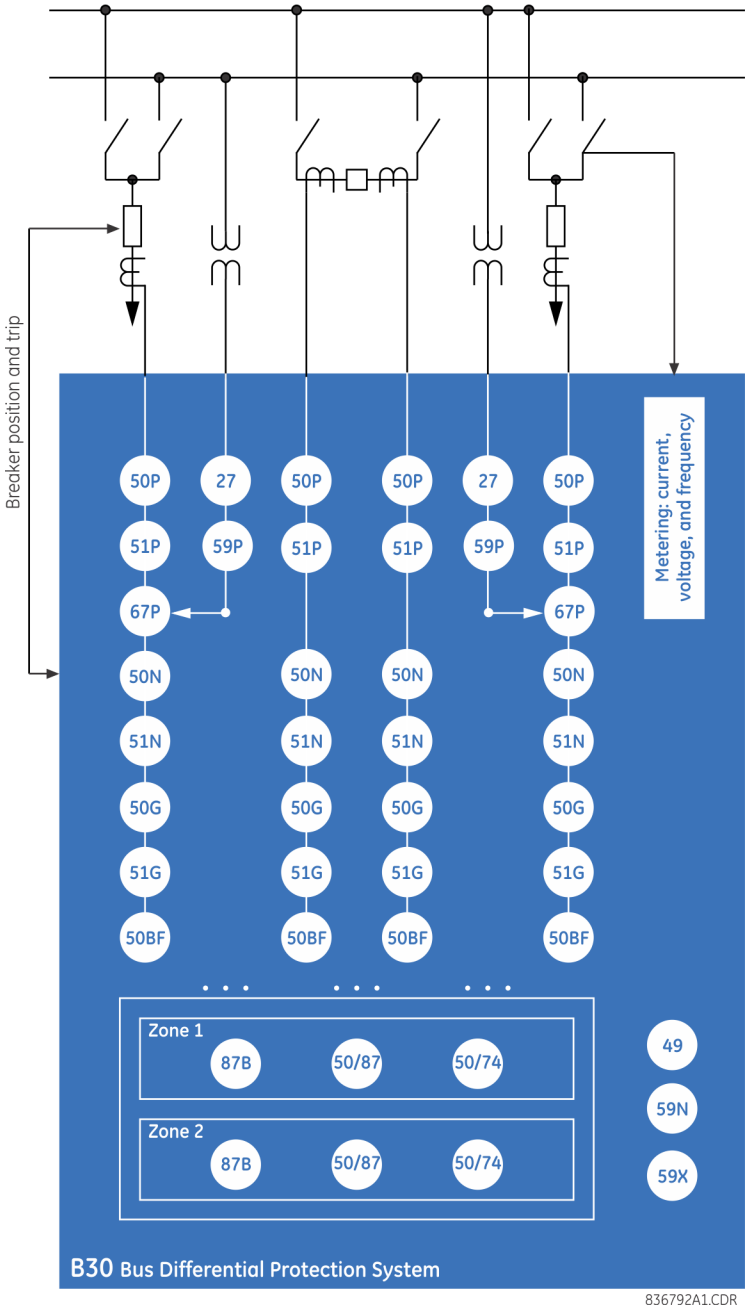

Table 2-2: Other device functions

Function	Function	Function
Breaker arcing current (I^2t)	DNP 3.0 or IEC 60870-5-104 protocol	Selector switch
Breaker control	Ethernet Global Data protocol	Setting groups (6)
Breaker flashover	Event recorder	Time synchronization over SNTP

2

Function
Breaker restrike
Contact inputs (up to 96)
Contact outputs (up to 64)
Control pushbuttons
CyberSentry™ security
Data logger
Demand
Digital counters (8)
Digital elements (48)
Direct inputs and outputs (32)
Disconnect switches

Function
FlexElements™ (8)
FlexLogic equations
IEC 60870-5-103 communications
IEC 61850 communications
IEC 62351-9 data and communications security
Metering: current, voltage, frequency
Modbus communications
Modbus user map
Non-volatile latches
Non-volatile selector switch
Oscillography

Function
Teleprotection inputs and outputs
Time synchronization over IRIG-B or IEEE 1588
Transducer inputs and outputs
User-definable displays
User-programmable fault reports
User-programmable LEDs
User-programmable pushbuttons
User-programmable self-tests
Virtual inputs (64)
Virtual outputs (96)

2.2 Security

The following security features are available:

- Password security — Basic security present by default
- EnerVista security — Role-based access to various EnerVista software screens and configuration elements. The feature is present by default in the EnerVista software.
- CyberSentry security — Advanced security available using a software option. When purchased, the option is automatically enabled, and the default Password security and EnerVista security are disabled.

2.2.0.1 EnerVista security

The EnerVista security management system is a role-based access control (RBAC) system that allows an administrator to manage the privileges of multiple users. This allows for access control of UR devices by multiple personnel within a substation and conforms to the principles of RBAC as defined in ANSI INCITS 359-2004. The EnerVista security management system is disabled by default to allow the administrator direct access to the EnerVista software after installation. It is recommended that security be enabled before placing the device in service.

Basic password or enhanced CyberSentry security applies, depending on purchase.

2.2.0.2 Password security

Password security is a basic security feature present by default.

Two levels of password security are provided: command and setting. Use of a password for each level controls whether users can enter commands and/or change settings.

The B30 supports password entry from a local or remote connection. Local access is defined as any access to settings or commands via the faceplate interface. This includes both keypad entry and the through the faceplate RS232 port. Remote access is defined as any access to settings or commands via any rear communications port. This includes both Ethernet and RS485 connections. Any changes to the local or remote passwords enables this functionality.

When entering a settings or command password via EnerVista or any serial interface, the user must enter the corresponding connection password. If the connection is to the back of the B30, the remote password must be used. If the connection is to the RS232 port of the faceplate, the local password applies.

Password access events are logged in the Event Recorder.

2.2.0.3 CyberSentry security

CyberSentry embedded security is available using a software option (Level 1) that provide advanced security services. When the option is purchased, the basic password security is disabled automatically.

CyberSentry provides security through the following features:

- An Authentication, Authorization, Accounting (AAA) Remote Authentication Dial-In User Service (RADIUS) client that is centrally managed, enables user attribution, provides accounting of all user activities, and uses secure standards-based strong cryptography for authentication and credential protection
- A Role-Based Access Control (RBAC) system that provides a permission model that allows access to UR device operations and configurations based on specific roles and individual user accounts configured on the AAA server (that is, Administrator, Supervisor, Engineer, Operator, Observer roles)
- Security event reporting through the Syslog protocol for supporting Security Information Event Management (SIEM) systems for centralized cybersecurity monitoring
- Strong encryption of all access and configuration network messages between the EnerVista software and UR devices using the Secure Shell (SSH) protocol, the Advanced Encryption Standard (AES), and 128-bit keys in Galois Counter Mode (GCM) as specified in the U.S. National Security Agency Suite B extension for SSH and approved by the National Institute of Standards and Technology (NIST) FIPS-140-2 standards for cryptographic systems

CyberSentry user roles

CyberSentry user roles (Administrator, Engineer, Operator, Supervisor, Observer) limit the levels of access to various UR device functions. This means that the EnerVista software allows for access to functionality based on the user's logged in role.

Example: Administrative functions can be segmented away from common operator functions, or engineering type access, all of which are defined by separate roles (see figure) so that access of UR devices by multiple personnel within a substation is allowed.

Figure 2-2: CyberSentry user roles

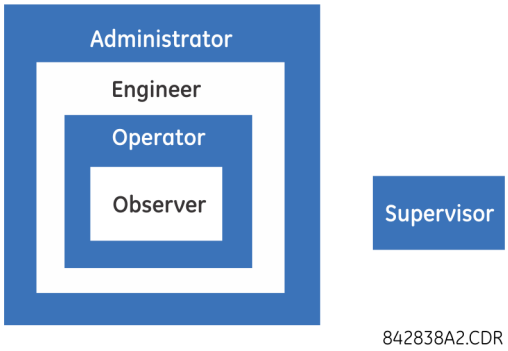

The table lists user roles and their corresponding capabilities.

Table 2-3: Permissions by user role for CyberSentry

Roles	Administrator	Engineer	Operator	Supervisor	Observer
	Complete access	Complete access except for CyberSentry Security	Command menu	Authorizes writing	Default role
Device Definition	R	R	R	R	R
Settings					
|--------- Product Setup					
|---------- Security (CyberSentry)	RW	R	R	R	R
|---------- Supervisory	See table notes	R	R	See table notes	R
|---------- Display Properties	RW	RW	R	R	R
|---------- Clear Relay Records (settings)	RW	RW	R	R	R

2

Roles	Administrator	Engineer	Operator	Supervisor	Observer
|---------- Communications	RW	RW	R	R	R
|---------- Modbus User Map	RW	RW	R	R	R
|---------- Real Time Clock	RW	RW	R	R	R
|---------- Oscillography	RW	RW	R	R	R
|---------- Data Logger	RW	RW	R	R	R
|---------- Demand	RW	RW	R	R	R
|---------- User-Programmable LEDs	RW	RW	R	R	R
|---------- User-Programmable Self Tests	RW	RW	R	R	R
|---------- Control Pushbuttons	RW	RW	R	R	R
|---------- User-Programmable Pushbuttons	RW	RW	R	R	R
|---------- Flex state Parameters	RW	RW	R	R	R
|---------- User-Definable Displays	RW	RW	R	R	R
|---------- Direct I/O	RW	RW	R	R	R
|---------- Teleprotection	RW	RW	R	R	R
|---------- Installation	RW	RW	R	R	R
|---------- System Setup	RW	RW	R	R	R
|---------- FlexLogic	RW	RW	R	R	R
|---------- Grouped Elements	RW	RW	R	R	R
|---------- Control Elements	RW	RW	R	R	R
|---------- Inputs / Outputs	RW	RW	R	R	R
|---------- Contact Inputs	RW	RW	R	R	R
|---------- Contact Input threshold	RW	RW	R	R	R
|---------- Virtual Inputs	RW	RW	R	R	R
|---------- Contact Outputs	RW	RW	R	R	R
|---------- Virtual Outputs	RW	RW	R	R	R
|---------- Resetting	RW	RW	R	R	R
|---------- Direct Inputs	RW	RW	R	R	R
|---------- Direct Outputs	RW	RW	R	R	R
|---------- Teleprotection	RW	RW	R	R	R
|---------- Direct Analogs	RW	RW	R	R	R
|---------- Direct Integers	RW	RW	R	R	R
|---------- Transducer I/O	RW	RW	R	R	R
|---------- Testing	RW	RW	R	R	R
|---------- Front Panel Labels Designer	NA	NA	NA	NA	NA
|---------- Protection Summary	NA	NA	NA	NA	NA
Commands	RW	RW	RW	R	R
|---------- Virtual Inputs	RW	RW	RW	R	R
|---------- Clear Records	RW	RW	RW	R	R
|---------- Set Date and Time	RW	RW	RW	R	R
User Displays	R	R	R	R	R
Targets	R	R	R	R	R
Actual Values	R	R	R	R	R

Roles	Administrator	Engineer	Operator	Supervisor	Observer
|---------- Front panel labels designer	R	R	R	R	R
|---------- Status	R	R	R	R	R
|---------- Metering	R	R	R	R	R
|---------- Transducer I/O	R	R	R	R	R
|---------- Records	R	R	R	R	R
|---------- Product Info	R	R	R	R	R
Maintenance	RW	RW	R	R	R
|---------- Modbus Analyzer	NA	NA	NA	NA	NA
|---------- Change front panel	RW	RW	RW	R	R
|---------- Update firmware	Yes	No	No	No	No
|---------- Retrieve file	Yes	No	No	No	No

Table Notes:

RW = read and write access

R = read access

Supervisor = RW (default), Administrator = R (default), Administrator = RW (only if Supervisor role is disabled)

NA = the permission is not enforced by CyberSentry security

CyberSentry user authentication

The following types of authentication are supported by CyberSentry to access the UR device:

- Device Authentication (local UR device authenticates)
- Server Authentication (RADIUS server authenticates)

The EnerVista software allows access to functionality that is determined by the user role, which comes either from the local UR device or the RADIUS server.

The EnerVista software has a device authentication option on the login screen for accessing the UR device. When the "Device" button is selected, the UR uses its local authentication database and not the RADIUS server to authenticate the user. In this case, it uses its built-in roles (Administrator, Engineer, Supervisor, Observer, Operator, or Administrator and Supervisor when Device Authentication is disabled) as login names and the associated passwords are stored on the UR device. As such, when using the local accounts, access is not user-attributable.

In cases where user-attributable access is required especially to facilitate auditable processes for compliance reasons, use RADIUS authentication only.

When the "Server" Authentication Type option is selected, the UR uses the RADIUS server and not its local authentication database to authenticate the user.

No password or security information is displayed in plain text by the EnerVista software or UR device, nor is such information ever transmitted without cryptographic protection.

CyberSentry server authentication

The UR has been designed to direct automatically the authentication requests based on user names. In this respect, local account names on the UR are considered as reserved and not used on a RADIUS server.

The UR detects automatically whether an authentication request is to be handled remotely or locally. As there are five local accounts possible on the UR, if the user ID credential does not match one of the five local accounts, the UR forwards automatically the request to a RADIUS server when one is provided.

If a RADIUS server is provided, but is unreachable over the network, server authentication requests are denied. In this situation, use local UR accounts to gain access to the UR system.

2

2.3 Order codes

The order code is on the product label and indicates the product options applicable.

The B30 is available as a 19-inch rack horizontal mount or reduced-size (¾) vertical unit. It consists of the following modules: power supply, CPU, CT/VT, contact input and output, transducer input and output, and inter-relay communications. Module options are specified at the time of ordering.

The order codes shown here are subject to change without notice. See the web page for the product for the latest options.

The order code depends on the mounting option (horizontal or vertical) and the type of CT/VT modules (enhanced diagnostic CT/VT modules or HardFiber™ process bus module). The process bus module provides an interface to HardFiber Bricks.

NOTE

The R-GOOSE protocol described in IEC 61850-8-1 is available through the IEC 61850 software option. If R-GOOSE security is required, the CyberSentry software option also must be purchased.

2.3.1 Order codes with enhanced CT/VT modules

Table 2-4: B30 order codes for horizontal units

	B30	- * ** - * * - F ** - H ** - L ** - N ** - S ** - U ** - W/X **		Full Size Horizontal Mount
BASE UNIT	B30			Base Unit
CPU		T		RS485 with 3 100Base-FX Ethernet, multimode, SFP with LC
		U		RS485 with 1 100Base-TX Ethernet, SFP RJ-45 + 2 100Base-FX Ethernet, multimode, SFP with LC
		V		RS485 with 3 100Base-TX Ethernet, SFP with RJ-45
SOFTWARE			00	No software options
			01	Ethernet Global Data (EGD) protocol
			03	IEC 61850 protocol
			04	IEC 61850 and Ethernet Global Data (EGD) protocols
			A0	CyberSentry Lvl 1
			A1	CyberSentry Lvl 1 and Ethernet Global Data
			A3	CyberSentry Lvl 1 and IEC 61850
			A4	CyberSentry Lvl 1, Ethernet Global Data, and IEC 61850
			B0	IEEE 1588
			B1	IEEE 1588 and Ethernet Global Data
			B3	IEEE 1588 and IEC 61850
			B4	IEEE 1588, Ethernet Global Data, and IEC 61850
			C0	Parallel Redundancy Protocol (PRP)
			C1	PRP and Ethernet Global Data
			C3	PRP and IEC 61850
			C4	PRP, Ethernet Global Data, and IEC 61850
			D0	IEEE 1588 and CyberSentry Lvl 1
			D1	IEEE 1588, CyberSentry Lvl 1, and Ethernet Global Data
			D3	IEEE 1588, CyberSentry Lvl 1, and IEC 61850
			D4	IEEE 1588, CyberSentry Lvl 1, Ethernet Global Data, and IEC 61850
			E0	IEEE 1588 and PRP
			E1	IEEE 1588, PRP, and Ethernet Global Dada
			E3	IEEE 1588, PRP, and IEC 61850
			E4	IEEE 1588, PRP, Ethernet Global Data, and IEC 61850
			F0	PRP and CyberSentry Lvl1
			F1	PRP, CyberSentry Lvl 1, and Ethernet Global Data
			F3	PRP, CyberSentry Lvl 1, and IEC 61850
			F4	PRP, CyberSentry Lvl 1, Ethernet Global Data, and IEC 61850
			G0	IEEE 1588, PRP, and CyberSentry Lvl 1
			G1	IEEE 1588, PRP, CyberSentry Lvl 1, Ethernet Global Data
			G3	IEEE 1588, PRP, CyberSentry Lvl 1, and IEC 61850
			G4	IEEE 1588, PRP, CyberSentry Lvl 1, Ethernet Global Data, and IEC 61850
			J0	IEC 60870-5-103
			J1	IEC 60870-5-103 + EGD
			J3	IEC 60870-5-103 + IEC 61850
			J4	IEC 60870-5-103 + EGD + IEC 61850
			K0	IEEE 1588 + PRP + IEC 60870-5-103
			K1	IEEE 1588 + PRP + IEC 60870-5-103 + EGD
			K3	IEEE 1588 + PRP + IEC 60870-5-103 + IEC 61850
			K4	IEEE 1588 + PRP + IEC 60870-5-103 + EGD + IEC 61850
			L0	IEC 60870-5-103 + IEEE 1588 + PRP + CyberSentry Lvl 1
			L1	IEC 60870-5-103 + IEEE 1588 + PRP + CyberSentry Lvl 1 + EGD
			L3	IEC 60870-5-103 + IEEE 1588 + PRP + CyberSentry Lvl 1 + IEC 61850
			L4	IEC 60870-5-103 + IEEE 1588 + PRP + CyberSentry Lvl 1 + EGD + IEC 61850

	B30	- * **	- *	*	*	- F **	- H **	- L **	- N **	- S **	- U **	- W/X **							Full Size Horizontal Mount
BASE UNIT	B30	| |	|			|	|	|	|	|	|	|						Base Unit
MOUNT/COATING			H																Horizontal (19" rack)
			A																Horizontal (19" rack) with harsh-environmental coating
FACEPLATE/ DISPLAY				C															English display
				D															French display
				R															Russian display
				P															English display with 4 small and 12 large programmable pushbuttons
				G															French display with 4 small and 12 large programmable pushbuttons
				S															Russian display with 4 small and 12 large programmable pushbuttons
				K															Enhanced front panel with English display
				M															Enhanced front panel with French display
				Q															Enhanced front panel with Russian display
				U															Enhanced front panel with Chinese display
				L															Enhanced front panel with English display and user-programmable pushbuttons
				N															Enhanced front panel with French display and user-programmable pushbuttons
				T															Enhanced front panel with Russian display and user-programmable pushbuttons
				V															Enhanced front panel with Chinese display and user-programmable pushbuttons
				W															Enhanced front panel with Turkish display
				Y															Enhanced front panel with Turkish display and user-programmable pushbuttons
				I															Enhanced front panel with German display
				J															Enhanced front panel with German display and user-programmable pushbuttons
POWER SUPPLY (redundant supply must be same type as main supply)					H														125 / 250 V AC/DC power supply
					H													RH	125 / 250 V AC/DC with redundant 125 / 250 V AC/DC power supply
					L														24 to 48 V (DC only) power supply
					L													RL	24 to 48 V (DC only) with redundant 24 to 48 V DC power supply
CT/VT DSP							8L		XX		XX								None (slots L and S only)
							8L		8L		8L								Standard 4CT/4VT with enhanced diagnostics
							8M		8M		8M								Sensitive ground 4CT/4VT with enhanced diagnostics
							8N		8N		8N								Standard 8CT with enhanced diagnostics
							8R		8R		8R								Sensitive ground 8CT with enhanced diagnostics
CONTACT INPUTS/OUTPUTS								XX	XX	XX	XX	XX							No module
								4A	4A	4A	4A	4A							4 Solid-State (no monitoring) MOSFET outputs
								4B	4B	4B	4B	4B							4 Solid-State (voltage with optional current) MOSFET outputs
								4C	4C	4C	4C	4C							4 Solid-State (current with optional voltage) MOSFET outputs
								4D	4D	4D	4D	4D							16 Contact inputs with Auto-Burnishing (maximum of three modules within a case)
								4L	4L	4L	4L	4L							14 Form-A (no monitoring) Latching outputs
								67	67	67	67	67							8 Form-A (no monitoring) outputs
								6A	6A	6A	6A	6A							2 Form-A (voltage with optional current) and 2 Form-C outputs, 8 contact inputs
								6B	6B	6B	6B	6B							2 Form-A (voltage with optional current) and 4 Form-C outputs, 4 contact inputs
								6C	6C	6C	6C	6C							8 Form-C outputs
								6D	6D	6D	6D	6D							16 Contact inputs
								6E	6E	6E	6E	6E							4 Form-C outputs, 8 contact inputs
								6F	6F	6F	6F	6F							8 Fast Form-C outputs
								6G	6G	6G	6G	6G							4 Form-A (voltage with optional current) outputs, 8 contact inputs
								6H	6H	6H	6H	6H							6 Form-A (voltage with optional current) outputs, 4 contact inputs
								6K	6K	6K	6K	6K							4 Form-C and 4 Fast Form-C outputs
								6L	6L	6L	6L	6L							2 Form-A (current with optional voltage) and 2 Form-C outputs, 8 contact inputs
								6M	6M	6M	6M	6M							2 Form-A (current with optional voltage) and 4 Form-C outputs, 4 contact inputs
								6N	6N	6N	6N	6N							4 Form-A (current with optional voltage) outputs, 8 contact inputs
								6P	6P	6P	6P	6P							6 Form-A (current with optional voltage) outputs, 4 contact inputs
								6R	6R	6R	6R	6R							2 Form-A (no monitoring) and 2 Form-C outputs, 8 contact inputs
								6S	6S	6S	6S	6S							2 Form-A (no monitoring) and 4 Form-C outputs, 4 contact inputs
								6T	6T	6T	6T	6T							4 Form-A (no monitoring) outputs, 8 contact inputs
								6U	6U	6U	6U	6U							6 Form-A (no monitoring) outputs, 4 contact inputs
								6V	6V	6V	6V	6V							2 Form-A outputs, 1 Form-C output, 1 Form-A latching output, 8 contact inputs
TRANSDUCER INPUTS/OUTPUTS (select a maximum of 3 per unit)								5A	5A	5A	5A	5A							4 DCmA inputs, 4 DCmA outputs (only one 5A or 5D module is allowed)
								5C	5C	5C	5C	5C							8 RTD inputs
								5D	5D	5D	5D	5D							4 RTD inputs, 4 DCmA outputs (only one 5A or 5D module is allowed)
								5E	5E	5E	5E	5E							4 RTD inputs, 4 DCmA inputs
								5F	5F	5F	5F	5F							8 DCmA inputs
INTER-RELAY COMMUNICATIONS (select a maximum of 1 per unit)													2A	2A					C37.94SM, 1300 nm single-mode, ELED, 1 channel single-mode
													2B	2B					C37.94SM, 1300 nm single-mode, ELED, 2 channel single-mode
													2H	2H					IEEE C37.94, 820 nm, 128 kbps, multimode, LED, 2 Channels
													2I	2I					Channel 1 - IEEE C37.94, MM, 64/128 kbps; Channel 2 - 1300 nm, single-mode, Laser
													2J	2J					Channel 1 - IEEE C37.94, MM, 64/128 kbps; Channel 2 - 1550 nm, single-mode, Laser
													72	72					1550 nm, single-mode, Laser, 1 Channel
													73	73					1550 nm, single-mode, Laser, 2 Channel
													76	76					IEEE C37.94, 820 nm, 64 kbps, multimode, LED, 1 Channel
													77	77					IEEE C37.94, 820 nm, 64 kbps, multimode, LED, 2 Channels
													7A	7A					820 nm, multimode, LED, 1 Channel
													7B	7B					1300 nm, multimode, LED, 1 Channel
													7C	7C					1300 nm, single-mode, ELED, 1 Channel
													7D	7D					1300 nm, single-mode, Laser, 1 Channel
													7F	7F					Channel 1 - G.703; Channel 2 - 1300 nm, multimode
													7G	7G					Channel 1 - G.703; Channel 2 - 1300 nm, single-mode ELED
													7H	7H					820 nm, multimode, LED, 2 Channels
													7I	7I					1300 nm, multimode, LED, 2 Channels
													7J	7J					1300 nm, single-mode, ELED, 2 Channels
													7K	7K					1300 nm, single-mode, Laser, 2 Channels
													7M	7M					Channel 1 - RS422; Channel 2 - 1300 nm, multimode, LED
													7N	7N					Channel 1 - RS422; Channel 2 - 1300 nm, single-mode, ELED
													7P	7P					Channel 1 - RS422; Channel 2 - 1300 nm, single-mode, Laser
													7Q	7Q					Channel 1 - G.703; Channel 2 - 1300 nm, single-mode Laser
													7R	7R					G.703, 1 Channel
													7S	7S					G.703, 2 Channels
													7T	7T					RS422, 1 Channel
													7W	7W					RS422, 2 Channels

2

Table 2-5: B30 order codes for reduced-size vertical units

	B30 - * ** - * * * - F ** - H ** - L ** - N ** - R **	
BASE UNIT	B30	Base Unit
CPU	T	RS485 with 3 100Base-FX Ethernet, multimode, SFP with LC
	U	RS485 with 1 100Base-TX Ethernet, SFP RJ-45 + 2 100Base-FX Ethernet, multimode, SFP with LC
	V	RS485 with 3 100Base-TX Ethernet, SFP with RJ-45
SOFTWARE	00	No software options
	01	Ethernet Global Data (EGD) protocol
	03	IEC 61850 protocol
	04	IEC 61850 and Ethernet Global Data (EGD) protocols
	A0	CyberSentry Lvl 1
	A1	CyberSentry Lvl 1 and Ethernet Global Data
	A3	CyberSentry Lvl 1 and IEC 61850
	A4	CyberSentry Lvl 1, Ethernet Global Data, and IEC 61850
	B0	IEEE 1588
	B1	IEEE 1588 and Ethernet Global Data
	B3	IEEE 1588 and IEC 61850
	B4	IEEE 1588, Ethernet Global Data, and IEC 61850
	C0	Parallel Redundancy Protocol (PRP)
	C1	PRP and Ethernet Global Data
	C3	PRP and IEC 61850
	C4	PRP, Ethernet Global Data, and IEC 61850
	D0	IEEE 1588 and CyberSentry Lvl 1
	D1	IEEE 1588, CyberSentry Lvl 1, and Ethernet Global Data
	D3	IEEE 1588, CyberSentry Lvl 1, and IEC 61850
	D4	IEEE 1588, CyberSentry Lvl 1, Ethernet Global Data, and IEC 61850
	E0	IEEE 1588 and PRP
	E1	IEEE 1588, PRP, and Ethernet Global Dada
	E3	IEEE 1588, PRP, and IEC 61850
	E4	IEEE 1588, PRP, Ethernet Global Data, and IEC 61850
	F0	PRP and CyberSentry Lvl1
	F1	PRP, CyberSentry Lvl1, and Ethernet Global Data
	F3	PRP, CyberSentry Lvl 1, and IEC 61850
	F4	PRP, CyberSentry Lvl 1, Ethernet Global Data, and IEC 61850
	G0	IEEE 1588, PRP, and CyberSentry Lvl 1
	G1	IEEE 1588, PRP, CyberSentry Lvl 1, Ethernet Global Data
	G3	IEEE 1588, PRP, CyberSentry Lvl 1, and IEC 61850
	G4	IEEE 1588, PRP, CyberSentry Lvl 1, Ethernet Global Data, and IEC 61850
	J0	IEC 60870-5-103
	J1	IEC 60870-5-103 + EGD
	J3	IEC 60870-5-103 + IEC 61850
	J4	IEC 60870-5-103 + EGD + IEC 61850
	K0	IEEE 1588 + PRP + IEC 60870-5-103
	K1	IEEE 1588 + PRP + IEC 60870-5-103 + EGD
	K3	IEEE 1588 + PRP + IEC 60870-5-103 + IEC 61850
	K4	IEEE 1588 + PRP + IEC 60870-5-103 + EGD + IEC 61850
	L0	IEC 60870-5-103 + IEEE 1588 + PRP + CyberSentry Lvl 1
	L1	IEC 60870-5-103 + IEEE 1588 + PRP + CyberSentry Lvl 1 + EGD
	L3	IEC 60870-5-103 + IEEE 1588 + PRP + CyberSentry Lvl 1 + IEC 61850
	L4	IEC 60870-5-103 + IEEE 1588 + PRP + CyberSentry Lvl 1 + EGD + IEC 61850
MOUNT/COATING	V	Vertical (3/4 rack)
	B	Vertical (3/4 rack) with harsh-environmental coating
FACEPLATE/ DISPLAY	F	English display
	K	Enhanced front panel with English display
	M	Enhanced front panel with French display
	Q	Enhanced front panel with Russian display
	U	Enhanced front panel with Chinese display
	L	Enhanced front panel with English display and user-programmable pushbuttons
	N	Enhanced front panel with French display and user-programmable pushbuttons
	T	Enhanced front panel with Russian display and user-programmable pushbuttons
	V	Enhanced front panel with Chinese display and user-programmable pushbuttons
	W	Enhanced front panel with Turkish display
	Y	Enhanced front panel with Turkish display and user-programmable pushbuttons
	I	Enhanced front panel with German display
	J	Enhanced front panel with German display and user-programmable pushbuttons
POWER SUPPLY	H	125 / 250 V AC/DC power supply
	L	24 to 48 V (DC only) power supply
CT/VT DSP	XX	None (slots L and S only)
	8L	Standard 4CT/4VT with enhanced diagnostics
	8M	Sensitive ground 4CT/4VT with enhanced diagnostics
	8N	Standard 8CT with enhanced diagnostics
	8R	Sensitive ground 8CT with enhanced diagnostics
CONTACT INPUTS/OUTPUTS	XX XX XX	No module
	4A 4A 4A	4 Solid-State (no monitoring) MOSFET outputs
	4B 4B 4B	4 Solid-State (voltage with optional current) MOSFET outputs
	4C 4C 4C	4 Solid-State (current with optional voltage) MOSFET outputs
	4D 4D 4D	16 Contact inputs with Auto-Burnishing (maximum of three modules within a case)
	4L 4L 4L	14 Form-A (no monitoring) Latching outputs
	67 67 67	8 Form-A (no monitoring) outputs
	6A 6A 6A	2 Form-A (voltage with optional current) and 2 Form-C outputs, 8 contact inputs
	6B 6B 6B	2 Form-A (voltage with optional current) and 4 Form-C outputs, 4 contact inputs
	6C 6C 6C	8 Form-C outputs
	6D 6D 6D	16 Contact inputs
	6E 6E 6E	4 Form-C outputs, 8 contact inputs
	6F 6F 6F	8 Fast Form-C outputs
	6G 6G 6G	4 Form-A (voltage with optional current) outputs, 8 contact inputs
	6H 6H 6H	6 Form-A (voltage with optional current) outputs, 4 contact inputs
	6K 6K 6K	4 Form-C and 4 Fast Form-C outputs
	6L 6L 6L	2 Form-A (current with optional voltage) and 2 Form-C outputs, 8 contact inputs
	6M 6M 6M	2 Form-A (current with optional voltage) and 4 Form-C outputs, 4 contact inputs
	6N 6N 6N	4 Form-A (current with optional voltage) outputs, 8 contact inputs
	6P 6P 6P	6 Form-A (current with optional voltage) outputs, 4 contact inputs
	6R 6R 6R	2 Form-A (no monitoring) and 2 Form-C outputs, 8 contact inputs
	6S 6S 6S	2 Form-A (no monitoring) and 4 Form-C outputs, 4 contact inputs
	6T 6T 6T	4 Form-A (no monitoring) outputs, 8 contact inputs
	6U 6U 6U	6 Form-A (no monitoring) outputs, 4 contact inputs
	6V 6V 6V	2 Form-A outputs, 1 Form-C output, 1 Form-A latching output, 8 contact inputs

	B30 - * ** - * * * - F ** - H ** - L ** - N ** - R **				
TRANSDUCER INPUTS/OUTPUTS (select a maximum of 3 per unit)		5A	5A	5A	4 DCmA inputs, 4 DCmA outputs (only one 5A or 5D module is allowed)
		5C	5C	5C	8 RTD inputs
		5D	5D	5D	4 RTD inputs, 4 DCmA outputs (only one 5A or 5D module is allowed)
		5E	5E	5E	4 RTD inputs, 4 DCmA inputs
		5F	5F	5F	8 DCmA inputs
INTER-RELAY COMMUNICATIONS (select a maximum of 1 per unit)				2A	C37.94SM, 1300 nm single-mode, ELED, 1 channel single-mode
				2B	C37.94SM, 1300 nm single-mode, ELED, 2 channel single-mode
				2H	IEEE C37.94, 820 nm, 128 kbps, multimode, LED, 2 Channels
				2I	Channel 1 - IEEE C37.94, MM, 64/128 kbps; Channel 2 - 1300 nm, single-mode, Laser
				2J	Channel 1 - IEEE C37.94, MM, 64/128 kbps; Channel 2 - 1550 nm, single-mode, Laser
				72	1550 nm, single-mode, Laser, 1 Channel
				73	1550 nm, single-mode, Laser, 2 Channel
				76	IEEE C37.94, 820 nm, 64 kbps, multimode, LED, 1 Channel
				77	IEEE C37.94, 820 nm, 64 kbps, multimode, LED, 2 Channels
				7A	820 nm, multimode, LED, 1 Channel
				7B	1300 nm, multimode, LED, 1 Channel
				7C	1300 nm, single-mode, ELED, 1 Channel
				7D	1300 nm, single-mode, Laser, 1 Channel
				7F	Channel 1 - G.703; Channel 2 - 1300 nm, multimode
				7G	Channel 1 - G.703; Channel 2 - 1300 nm, single-mode ELED
				7H	820 nm, multimode, LED, 2 Channels
				7I	1300 nm, multimode, LED, 2 Channels
				7J	1300 nm, single-mode, ELED, 2 Channels
				7K	1300 nm, single-mode, Laser, 2 Channels
				7M	Channel 1 - RS422; Channel 2 - 1300 nm, multimode, LED
				7N	Channel 1 - RS422; Channel 2 - 1300 nm, single-mode, ELED
				7P	Channel 1 - RS422; Channel 2 - 1300 nm, single-mode, Laser
				7Q	Channel 1 - G.703; Channel 2 - 1300 nm, single-mode Laser
				7R	G.703, 1 Channel
				7S	G.703, 2 Channels
				7T	RS422, 1 Channel
				7W	RS422, 2 Channels

2.3.2 Order codes with process bus modules

Table 2-6: B30 order codes for horizontal units with process bus

	B30 - * ** - * * * - F ** - H ** - L ** - N ** - S ** - W/X **												
													Full Size Horizontal Mount
BASE UNIT	B30												Base Unit
CPU		T											RS485 with 3 100Base-FX Ethernet, multimode, SFP with LC
		U											RS485 with 1 100Base-TX Ethernet, SFP RJ-45 + 2 100Base-FX Ethernet, multimode, SFP with LC
		V											RS485 with 3 100Base-TX Ethernet, SFP with RJ-45
SOFTWARE			00										No software options
			01										Ethernet Global Data (EGD) protocol
			03										IEC 61850 protocol
			04										IEC 61850 and Ethernet Global Data (EGD) protocols
			A0										CyberSentry Lvl 1
			A1										CyberSentry Lvl 1 and Ethernet Global Data
			A3										CyberSentry Lvl 1 and IEC 61850
			A4										CyberSentry Lvl 1, Ethernet Global Data, and IEC 61850
			B0										IEEE 1588
			B1										IEEE 1588 and Ethernet Global Data
			B3										IEEE 1588 and IEC 61850
			B4										IEEE 1588, Ethernet Global Data, and IEC 61850
			C0										Parallel Redundancy Protocol (PRP)
			C1										PRP and Ethernet Global Data
			C3										PRP and IEC 61850
			C4										PRP, Ethernet Global Data, and IEC 61850
			D0										IEEE 1588 and CyberSentry Lvl 1
			D1										IEEE 1588, CyberSentry Lvl 1, and Ethernet Global Data
			D3										IEEE 1588, CyberSentry Lvl 1, and IEC 61850
			D4										IEEE 1588, CyberSentry Lvl 1, Ethernet Global Data, and IEC 61850
			E0										IEEE 1588 and PRP
			E1										IEEE 1588, PRP, and Ethernet Global Dada
			E3										IEEE 1588, PRP, and IEC 61850
			E4										IEEE 1588, PRP, Ethernet Global Data, and IEC 61850
			F0										PRP and CyberSentry Lvl1
			F1										PRP, CyberSentry Lvl1, and Ethernet Global Data
			F3										PRP, CyberSentry Lvl 1, and IEC 61850
			F4										PRP, CyberSentry Lvl 1, Ethernet Global Data, and IEC 61850
			G0										IEEE 1588, PRP, and CyberSentry Lvl 1
			G1										IEEE 1588, PRP CyberSentry Lvl 1, Ethernet Global Data
			G3										IEEE 1588, PRP CyberSentry Lvl 1, and IEC 61850
			G4										IEEE 1588 PRP, CyberSentry Lvl 1, Ethernet Global Data, and IEC 61850
			J0										IEC 60870-5-103
			J1										IEC 60870-5-103 + EGD
			J3										IEC 60870-5-103 + IEC 61850
			J4										IEC 60870-5-103 + EGD + IEC 61850
			K0										IEEE1588 + PRP + IEC 60870-5-103
			K1										IEEE1588 + PRP + IEC 60870-5-103 + EGD
			K3										IEEE1588 + PRP + IEC 60870-5-103 + IEC 61850
			K4										IEEE1588 + PRP + IEC 60870-5-103 + EGD + IEC 61850
			L0										IEC 60870-5-103 + IEEE1588 + PRP + CyberSentry Lvl 1
			L1										IEC 60870-5-103 + IEEE1588 + PRP + CyberSentry Lvl 1 + EGD
			L3										IEC 60870-5-103 + IEEE1588 + PRP + CyberSentry Lvl 1 + IEC 61850
			L4										IEC 60870-5-103 + IEEE1588 + PRP + CyberSentry Lvl 1 + EGD + IEC 61850

2

	B30	- *	**	- *	*	*	- F **	- H **	- L **	- N **	- S **	- W/X **	Full Size Horizontal Mount
BASE UNIT	B30												Base Unit
MOUNT/COATING				H									Horizontal (19" rack)
				A									Horizontal (19" rack) with harsh-environmental coating
FACEPLATE/ DISPLAY					C								English display
					D								French display
					R								Russian display
					P								English display with 4 small and 12 large programmable pushbuttons
					G								French display with 4 small and 12 large programmable pushbuttons
					S								Russian display with 4 small and 12 large programmable pushbuttons
					K								Enhanced front panel with English display
					M								Enhanced front panel with French display
					Q								Enhanced front panel with Russian display
					U								Enhanced front panel with Chinese display
					L								Enhanced front panel with English display and user-programmable pushbuttons
					N								Enhanced front panel with French display and user-programmable pushbuttons
					T								Enhanced front panel with Russian display and user-programmable pushbuttons
					V								Enhanced front panel with Chinese display and user-programmable pushbuttons
					W								Enhanced front panel with Turkish display
					Y								Enhanced front panel with Turkish display and user-programmable pushbuttons
					I								Enhanced front panel with German display
					J								Enhanced front panel with German display and user-programmable pushbuttons
POWER SUPPLY						H							125 / 250 V AC/DC power supply
(redundant supply must be same type as main supply)						H						RH	125 / 250 V AC/DC with redundant 125 / 250 V AC/DC power supply
						L							24 to 48 V (DC only) power supply
						L						RL	24 to 48 V (DC only) with redundant 24 to 48 V DC power supply
PROCESS BUS MODULE								81					Eight-port digital process bus module
CONTACT INPUTS/OUTPUTS							XX		XX	XX	XX	XX	No module
										4A	4A		4 Solid-State (no monitoring) MOSFET outputs
										4B	4B		4 Solid-State (voltage with optional current) MOSFET outputs
										4C	4C		4 Solid-State (current with optional voltage) MOSFET outputs
										4D	4D		16 Contact inputs with Auto-Burnishing (maximum of three modules within a case)
										4L	4L		14 Form-A (no monitoring) Latching outputs
										67	67		8 Form-A (no monitoring) outputs
										6A	6A		2 Form-A (voltage with optional current) and 2 Form-C outputs, 8 contact inputs
										6B	6B		2 Form-A (voltage with optional current) and 4 Form-C outputs, 4 contact inputs
										6C	6C		8 Form-C outputs
										6D	6D		16 Contact inputs
										6E	6E		4 Form-C outputs, 8 contact inputs
										6F	6F		8 Fast Form-C outputs
										6G	6G		4 Form-A (voltage with optional current) outputs, 8 contact inputs
										6H	6H		6 Form-A (voltage with optional current) outputs, 4 contact inputs
										6K	6K		4 Form-C and 4 Fast Form-C outputs
										6L	6L		2 Form-A (current with optional voltage) and 2 Form-C outputs, 8 contact inputs
										6M	6M		2 Form-A (current with optional voltage) and 4 Form-C outputs, 4 contact inputs
										6N	6N		4 Form-A (current with optional voltage) outputs, 8 contact inputs
										6P	6P		6 Form-A (current with optional voltage) outputs, 4 contact inputs
										6R	6R		2 Form-A (no monitoring) and 2 Form-C outputs, 8 contact inputs
										6S	6S		2 Form-A (no monitoring) and 4 Form-C outputs, 4 contact inputs
										6T	6T		4 Form-A (no monitoring) outputs, 8 contact inputs
										6U	6U		6 Form-A (no monitoring) outputs, 4 contact inputs
										6V	6V		2 Form-A outputs, 1 Form-C output, 1 Form-A latching output, 8 contact inputs
INTER-RELAY COMMUNICATIONS (select a maximum of 1 per unit)												2A	C37.94SM, 1300 nm single-mode, ELED, 1 channel single-mode
												2B	C37.94SM, 1300 nm single-mode, ELED, 2 channel single-mode
												2H	IEEE C37.94, 820 nm, 128 kbps, multimode, LED, 2 Channels
												2I	Channel 1 - IEEE C37.94, MM, 64/128 kbps; Channel 2 - 1300 nm, single-mode, Laser
												2J	Channel 1 - IEEE C37.94, MM, 64/128 kbps; Channel 2 - 1550 nm, single-mode, Laser
												72	1550 nm, single-mode, Laser, 1 Channel
												73	1550 nm, single-mode, Laser, 2 Channel
												76	IEEE C37.94, 820 nm, 64 kbps, multimode, LED, 1 Channel
												77	IEEE C37.94, 820 nm, 64 kbps, multimode, LED, 2 Channels
												7A	820 nm, multimode, LED, 1 Channel
												7B	1300 nm, multimode, LED, 1 Channel
												7C	1300 nm, single-mode, ELED, 1 Channel
												7D	1300 nm, single-mode, Laser, 1 Channel
												7F	Channel 1 - G.703; Channel 2 - 1300 nm, multimode
												7G	Channel 1 - G.703; Channel 2 - 1300 nm, single-mode ELED
												7H	820 nm, multimode, LED, 2 Channels
												7I	1300 nm, multimode, LED, 2 Channels
												7J	1300 nm, single-mode, ELED, 2 Channels
												7K	1300 nm, single-mode, Laser, 2 Channels
												7M	Channel 1 - RS422; Channel 2 - 1300 nm, multimode, LED
												7N	Channel 1 - RS422; Channel 2 - 1300 nm, single-mode, ELED
												7P	Channel 1 - RS422; Channel 2 - 1300 nm, single-mode, Laser
												7Q	Channel 1 - G.703; Channel 2 - 1300 nm, single-mode Laser
												7R	G.703, 1 Channel
												7S	G.703, 2 Channels
												7T	RS422, 1 Channel
												7W	RS422, 2 Channels

Table 2-7: B30 order codes for reduced-size vertical units with process bus

	B30	- *	**	- *	*	*	- F **	- H **	- L **	- N **	- R **	Reduced Size Vertical Mount
BASE UNIT	B30											Base Unit
CPU		T										RS485 with 3 100Base-FX Ethernet, multimode, SFP with LC
		U										RS485 with 1 100Base-TX Ethernet, SFP RJ-45 + 2 100Base-FX Ethernet, multimode, SFP with LC
		V										RS485 with 3 100Base-TX Ethernet, SFP with RJ-45
SOFTWARE			00									No software options
			01									Ethernet Global Data (EGD) protocol
			03									IEC 61850 protocol
			04									IEC 61850 and Ethernet Global Data (EGD) protocols
			A0									CyberSentry Lvl 1
			A1									CyberSentry Lvl 1 and Ethernet Global Data
			A3									CyberSentry Lvl 1 and IEC 61850
			A4									CyberSentry Lvl 1, Ethernet Global Data, and IEC 61850
			B0									IEEE 1588

B30	- *	**	- *	*	*	- F **	- H **	- L **	- N **	- R **		Reduced Size Vertical Mount
		B1										IEEE 1588 and Ethernet Global Data
		B3										IEEE 1588 and IEC 61850
		B4										IEEE 1588, Ethernet Global Data, and IEC 61850
		C0										Parallel Redundancy Protocol (PRP)
		C1										PRP and Ethernet Global Data
		C3										PRP and IEC 61850
		C4										PRP, Ethernet Global Data, and IEC 61850
		D0										IEEE 1588 and CyberSentry Lvl 1
		D1										IEEE 1588, CyberSentry Lvl 1, and Ethernet Global Data
		D3										IEEE 1588, CyberSentry Lvl 1, and IEC 61850
		D4										IEEE 1588, CyberSentry Lvl 1, Ethernet Global Data, and IEC 61850
		E0										IEEE 1588 and PRP
		E1										IEEE 1588, PRP, and Ethernet Global Dada
		E3										IEEE 1588, PRP, and IEC 61850
		E4										IEEE 1588, PRP, Ethernet Global Data, and IEC 61850
		F0										PRP and CyberSentry Lvl1
		F1										PRP, CyberSentry Lvl1, and Ethernet Global Data
		F3										PRP, CyberSentry Lvl 1, and IEC 61850
		F4										PRP, CyberSentry Lvl 1, Ethernet Global Data, and IEC 61850
		G0										IEEE 1588, PRP, and CyberSentry Lvl 1
		G1										IEEE 1588, PRP CyberSentry Lvl 1, Ethernet Global Data
		G3										IEEE 1588, PRP CyberSentry Lvl 1, and IEC 61850
		G4										IEEE 1588 PRP, CyberSentry Lvl 1, Ethernet Global Data, and IEC 61850
		J0										IEC 60870-5-103
		J1										IEC 60870-5-103 + EGD
		J3										IEC 60870-5-103 + IEC 61850
		J4										IEC 60870-5-103 + EGD + IEC 61850
		K0										IEEE1588 + PRP + IEC 60870-5-103
		K1										IEEE1588 + PRP + IEC 60870-5-103 + EGD
		K3										IEEE1588 + PRP + IEC 60870-5-103 + IEC 61850
		K4										IEEE1588 + PRP + IEC 60870-5-103 + EGD + IEC 61850
		L0										IEC 60870-5-103 + IEEE1588 + PRP + CyberSentry Lvl 1
		L1										IEC 60870-5-103 + IEEE1588 + PRP + CyberSentry Lvl 1 + EGD
		L3										IEC 60870-5-103 + IEEE1588 + PRP + CyberSentry Lvl 1 + IEC 61850
		L4										IEC 60870-5-103 + IEEE1588 + PRP + CyberSentry Lvl 1 + EGD + IEC 61850
MOUNT/COATING			V									Vertical (3/4 rack)
			B									Vertical (3/4 rack) with harsh environmental coating
FACEPLATE/ DISPLAY				F								English display
				K								Enhanced front panel with English display
				M								Enhanced front panel with French display
				Q								Enhanced front panel with Russian display
				U								Enhanced front panel with Chinese display
				L								Enhanced front panel with English display and user-programmable pushbuttons
				N								Enhanced front panel with French display and user-programmable pushbuttons
				T								Enhanced front panel with Russian display and user-programmable pushbuttons
				V								Enhanced front panel with Chinese display and user-programmable pushbuttons
				W								Enhanced front panel with Turkish display
				Y								Enhanced front panel with Turkish display and user-programmable pushbuttons
				I								Enhanced front panel with German display
				J								Enhanced front panel with German display and user-programmable pushbuttons
POWER SUPPLY					H							125 / 250 V AC/DC power supply
					L							24 to 48 V (DC only) power supply
CT/VT MODULES							81					Eight-port digital process bus module
CONTACT INPUTS/OUTPUTS						XX		XX	XX			No module
									4A			4 Solid-State (no monitoring) MOSFET outputs
									4B			4 Solid-State (voltage with optional current) MOSFET outputs
									4C			4 Solid-State (current with optional voltage) MOSFET outputs
									4D			16 Contact inputs with Auto-Burnishing
									4L			14 Form-A (no monitoring) Latching outputs
									67			8 Form-A (no monitoring) outputs
									6A			2 Form-A (voltage with optional current) and 2 Form-C outputs, 8 contact inputs
									6B			2 Form-A (voltage with optional current) and 4 Form-C outputs, 4 contact inputs
									6C			8 Form-C outputs
									6D			16 Contact inputs
									6E			4 Form-C outputs, 8 contact inputs
									6F			8 Fast Form-C outputs
									6G			4 Form-A (voltage with optional current) outputs, 8 contact inputs
									6H			6 Form-A (voltage with optional current) outputs, 4 contact inputs
									6K			4 Form-C and 4 Fast Form-C outputs
									6L			2 Form-A (current with optional voltage) and 2 Form-C outputs, 8 contact inputs
									6M			2 Form-A (current with optional voltage) and 4 Form-C outputs, 4 contact inputs
									6N			4 Form-A (current with optional voltage) outputs, 8 contact inputs
									6P			6 Form-A (current with optional voltage) outputs, 4 contact inputs
									6R			2 Form-A (no monitoring) and 2 Form-C outputs, 8 contact inputs
									6S			2 Form-A (no monitoring) and 4 Form-C outputs, 4 contact inputs
									6T			4 Form-A (no monitoring) outputs, 8 contact inputs
									6U			6 Form-A (no monitoring) outputs, 4 contact inputs
									6V			2 Form-A outputs, 1 Form-C output, 1 Form-A latching output, 8 contact inputs
INTER-RELAY COMMUNICATIONS (select a maximum of 1 per unit)											2A	C37.94SM, 1300 nm single-mode, ELED, 1 channel single-mode
											2B	C37.94SM, 1300 nm single-mode, ELED, 2 channel single-mode
											2H	IEEE C37.94, 820 nm, 128 kbps, multimode, LED, 2 Channels
											2I	Channel 1 - IEEE C37.94, MM, 64/128 kbps; Channel 2 - 1300 nm, single-mode, Laser
											2J	Channel 1 - IEEE C37.94, MM, 64/128 kbps; Channel 2 - 1550 nm, single-mode, Laser
											72	1550 nm, single-mode, Laser, 1 Channel
											73	1550 nm, single-mode, Laser, 2 Channel
											76	IEEE C37.94, 820 nm, 64 kbps, multimode, LED, 1 Channel
											77	IEEE C37.94, 820 nm, 64 kbps, multimode, LED, 2 Channels
											7A	820 nm, multimode, LED, 1 Channel
											7B	1300 nm, multimode, LED, 1 Channel
											7C	1300 nm, single-mode, ELED, 1 Channel
											7D	1300 nm, single-mode, Laser, 1 Channel
											7F	Channel 1 - G.703; Channel 2 - 1300 nm, multimode
											7G	Channel 1 - G.703; Channel 2 - 1300 nm, single-mode ELED
											7H	820 nm, multimode, LED, 2 Channels
											7I	1300 nm, multimode, LED, 2 Channels
											7J	1300 nm, single-mode, ELED, 2 Channels
											7K	1300 nm, single-mode, Laser, 2 Channels
											7M	Channel 1 - RS422; Channel 2 - 1300 nm, multimode, LED
											7N	Channel 1 - RS422; Channel 2 - 1300 nm, single-mode, ELED
											7P	Channel 1 - RS422; Channel 2 - 1300 nm, single-mode, Laser

B30 - * ** - * * * - F ** - H ** - L ** - N ** - R **		Reduced Size Vertical Mount
	7Q	Channel 1 - G.703; Channel 2 - 1300 nm, single-mode Laser
	7R	G.703, 1 Channel
	7S	G.703, 2 Channels
	7T	RS422, 1 Channel
	7W	RS422, 2 Channels

2.3.3 Replacement modules

2

Replacement modules can be ordered separately. When ordering a replacement CPU module or faceplate, provide the serial number of your existing unit.

Not all replacement modules apply to the B30 relay. The modules specified in the order codes for the B30 are available as replacement modules for the B30.

The order codes shown here are subject to change without notice. See the web page for the product for the latest options.

Table 2-8: UR order codes for replacement modules, horizontal units

	UR - **	- *	
POWER SUPPLY	SH	A	125 / 300 V AC/DC
redundant supply only available in horizontal units and must be same type as main supply	SL	A	24 to 48 V (DC only)
CPU	T		RS485 with 3 100Base-FX Ethernet, multimode, SFP with LC
	U		RS485 with 1 100Base-TX Ethernet, SFP RJ-45 + 2 100Base-FX Ethernet, multimode, SFP with LC
	V		RS485 with 3 100Base-TX Ethernet, SFP with RJ-45
FACEPLATE/DISPLAY	3C		Horizontal faceplate with keypad and English display
	3D		Horizontal faceplate with keypad and French display
	3R		Horizontal faceplate with keypad and Russian display
	3A		Horizontal faceplate with keypad and Chinese display
	3P		Horizontal faceplate with keypad, user-programmable pushbuttons, and English display
	3G		Horizontal faceplate with keypad, user-programmable pushbuttons, and French display
	3S		Horizontal faceplate with keypad, user-programmable pushbuttons, and Russian display
	3B		Horizontal faceplate with keypad, user-programmable pushbuttons, and Chinese display
	3K		Enhanced front panel with English display
	3M		Enhanced front panel with French display
	3Q		Enhanced front panel with Russian display
	3U		Enhanced front panel with Chinese display
	3L		Enhanced front panel with English display and user-programmable pushbuttons
	3N		Enhanced front panel with French display and user-programmable pushbuttons
	3T		Enhanced front panel with Russian display and user-programmable pushbuttons
	3V		Enhanced front panel with Chinese display and user-programmable pushbuttons
	3I		Enhanced front panel with German display
	3J		Enhanced front panel with German display and user-programmable pushbuttons
CONTACT INPUTS AND OUTPUTS	4A		4 Solid-State (no monitoring) MOSFET outputs
	4B		4 Solid-State (voltage with optional current) MOSFET outputs
	4C		4 Solid-State (current with optional voltage) MOSFET outputs
	4D		16 Contact inputs with Auto-Burnishing
	4L		14 Form-A (no monitoring) Latching outputs
	67		8 Form-A (no monitoring) outputs
	6A		2 Form-A (voltage with optional current) and 2 Form-C outputs, 8 contact inputs
	6B		2 Form-A (voltage with optional current) and 4 Form-C outputs, 4 contact inputs
	6C		8 Form-C outputs
	6D		16 Contact inputs
	6E		4 Form-C outputs, 8 contact inputs
	6F		8 Fast Form-C outputs
	6G		4 Form-A (voltage with optional current) outputs, 8 contact inputs
	6H		6 Form-A (voltage with optional current) outputs, 4 contact inputs
	6K		4 Form-C and 4 Fast Form-C outputs
	6L		2 Form-A (current with optional voltage) and 2 Form-C outputs, 8 contact inputs
	6M		2 Form-A (current with optional voltage) and 4 Form-C outputs, 4 contact inputs
	6N		4 Form-A (current with optional voltage) outputs, 8 contact inputs
	6P		6 Form-A (current with optional voltage) outputs, 4 contact inputs
	6R		2 Form-A (no monitoring) and 2 Form-C outputs, 8 contact inputs
	6S		2 Form-A (no monitoring) and 4 Form-C outputs, 4 contact inputs
	6T		4 Form-A (no monitoring) outputs, 8 contact inputs
	6U		6 Form-A (no monitoring) outputs, 4 contact inputs
	6V		2 Form-A outputs, 1 Form-C output, 2 Form-A (no monitoring) latching outputs, 8 contact inputs
CT/VT MODULES (not available for the C30)	8L		Standard 4CT/4VT with enhanced diagnostics
	8N		Standard 8CT with enhanced diagnostics
	8M		Sensitive Ground 4CT/4VT with enhanced diagnostics
	8R		Sensitive Ground 8CT with enhanced diagnostics
INTER-RELAY COMMUNICATIONS	2A		C37.94SM, 1300 nm single-mode, ELED, 1 channel single-mode
	2B		C37.94SM, 1300 nm single-mode, ELED, 2 channel single-mode
	2H		IEEE C37.94, 820 nm, 128 kbps, multimode, LED, 2 Channels
	2I		Channel 1 - IEEE C37.94, multimode, 64/128 kbps; Channel 2 - 1300 nm, single-mode, Laser
	2J		Channel 1 - IEEE C37.94, multimode, 64/128 kbps; Channel 2 - 1550 nm, single-mode, Laser

	UR - **	- *	
	72		1550 nm, single-mode, Laser, 1 Channel
	73		1550 nm, single-mode, Laser, 2 Channel
	76		IEEE C37.94, 820 nm, multimode, LED, 1 Channel
	77		IEEE C37.94, 820 nm, multimode, LED, 2 Channels
	7A		820 nm, multimode, LED, 1 Channel
	7B		1300 nm, multimode, LED, 1 Channel
	7C		1300 nm, single-mode, ELED, 1 Channel
	7D		1300 nm, single-mode, Laser, 1 Channel
	7F		Channel 1 - G.703; Channel 2 - 1300 nm, multimode
	7G		Channel 1 - G.703; Channel 2 - 1300 nm, single-mode ELED
	7H		820 nm, multimode, LED, 2 Channels
	7I		1300 nm, multimode, LED, 2 Channels
	7J		1300 nm, single-mode, ELED, 2 Channels
	7K		1300 nm, single-mode, Laser, 2 Channels
	7M		Channel 1 - RS422; Channel 2 - 1300 nm, multimode, LED
	7N		Channel 1 - RS422; Channel 2 - 1300 nm, single-mode, ELED
	7P		Channel 1 - RS422; Channel 2 - 1300 nm, single-mode, Laser
	7Q		Channel 1 - G.703; Channel 2 - 1300 nm, single-mode Laser
	7R		G.703, 1 Channel
	7S		G.703, 2 Channels
	7T		RS422, 1 Channel
	7W		RS422, 2 Channels
TRANSDUCER INPUTS/OUTPUTS	5A		4 DCmA inputs, 4 DCmA outputs (only one 5A or 5D module is allowed)
	5C		8 RTD inputs
	5D		4 RTD inputs, 4 DCmA outputs (only one 5A or 5D module is allowed)
	5E		4 DCmA inputs, 4 RTD inputs
	5F		8 DCmA inputs

Table 2-9: UR order codes for replacement modules, vertical units

	UR - **	- *	
POWER SUPPLY	SH	B	125 / 300 V AC/DC
	SL	B	24 to 48 V (DC only)
CPU	T		RS485 with 3 100Base-FX Ethernet, multimode, SFP with LC
	U		RS485 with 1 100Base-TX Ethernet, SFP RJ-45 + 2 100Base-FX Ethernet, multimode, SFP with LC
	V		RS485 with 3 100Base-TX Ethernet, SFP with RJ-45
FACEPLATE/DISPLAY	3F		Vertical faceplate with keypad and English display
	3D		Vertical faceplate with keypad and French display
	3R		Vertical faceplate with keypad and Russian display
	3A		Vertical faceplate with keypad and Chinese display
	3K		Enhanced front panel with English display
	3M		Enhanced front panel with French display
	3Q		Enhanced front panel with Russian display
	3U		Enhanced front panel with Chinese display
	3L		Enhanced front panel with English display and user-programmable pushbuttons
	3N		Enhanced front panel with French display and user-programmable pushbuttons
	3T		Enhanced front panel with Russian display and user-programmable pushbuttons
	3V		Enhanced front panel with Chinese display and user-programmable pushbuttons
	3I		Enhanced front panel with German display
	3J		Enhanced front panel with German display and user-programmable pushbuttons
CONTACT INPUTS/OUTPUTS	4A		4 Solid-State (no monitoring) MOSFET outputs
	4B		4 Solid-State (voltage with optional current) MOSFET outputs
	4C		4 Solid-State (current with optional voltage) MOSFET outputs
	4D		16 Contact inputs with Auto-Burnishing
	4L		14 Form-A (no monitoring) Latching outputs
	67		8 Form-A (no monitoring) outputs
	6A		2 Form-A (voltage with optional current) and 2 Form-C outputs, 8 contact inputs
	6B		2 Form-A (voltage with optional current) and 4 Form-C outputs, 4 contact inputs
	6C		8 Form-C outputs
	6D		16 Contact inputs
	6E		4 Form-C outputs, 8 contact inputs
	6F		8 Fast Form-C outputs
	6G		4 Form-A (voltage with optional current) outputs, 8 contact inputs
	6H		6 Form-A (voltage with optional current) outputs, 4 contact inputs
	6K		4 Form-C and 4 Fast Form-C outputs
	6L		2 Form-A (current with optional voltage) and 2 Form-C outputs, 8 contact inputs
	6M		2 Form-A (current with optional voltage) and 4 Form-C outputs, 4 contact inputs
	6N		4 Form-A (current with optional voltage) outputs, 8 contact inputs
	6P		6 Form-A (current with optional voltage) outputs, 4 contact inputs
	6R		2 Form-A (no monitoring) and 2 Form-C outputs, 8 contact inputs
	6S		2 Form-A (no monitoring) and 4 Form-C outputs, 4 contact inputs
	6T		4 Form-A (no monitoring) outputs, 8 contact inputs
	6U		6 Form-A (no monitoring) outputs, 4 contact inputs
	6V		2 Form-A outputs, 1 Form-C output, 2 Form-A (no monitoring) latching outputs, 8 contact inputs
CT/VT MODULES (not available for the C30)	8L		Standard 4CT/4VT with enhanced diagnostics
	8N		Standard 8CT with enhanced diagnostics
	8M		Sensitive Ground 4CT/4VT with enhanced diagnostics
	8R		Sensitive Ground 8CT with enhanced diagnostics
INTER-RELAY COMMUNICATIONS	2A		C37.94SM, 1300 nm single-mode, ELED, 1 channel single-mode
	2B		C37.94SM, 1300 nm single-mode, ELED, 2 channel single-mode
	2H		IEEE C37.94, 820 nm, 128 kbps, multimode, LED, 2 Channels
	2I		Channel 1 - IEEE C37.94, multimode, 64/128 kbps; Channel 2 - 1300 nm, single-mode, Laser
	2J		Channel 1 - IEEE C37.94, multimode, 64/128 kbps; Channel 2 - 1550 nm, single-mode, Laser
	72		1550 nm, single-mode, Laser, 1 Channel
	73		1550 nm, single-mode, Laser, 2 Channel
	76		IEEE C37.94, 820 nm, 64 kbps, multimode, LED, 1 Channel
	77		IEEE C37.94, 820 nm, 64 kbps, multimode, LED, 2 Channels
	7A		820 nm, multimode, LED, 1 Channel
	7B		1300 nm, multimode, LED, 1 Channel
	7C		1300 nm, single-mode, ELED, 1 Channel
	7D		1300 nm, single-mode, Laser, 1 Channel
	7F		Channel 1 - G.703; Channel 2 - 1300 nm, multimode
	7G		Channel 1 - G.703; Channel 2 - 1300 nm, single-mode ELED
	7H		820 nm, multimode, LED, 2 Channels
	7I		1300 nm, multimode, LED, 2 Channels
	7J		1300 nm, single-mode, ELED, 2 Channels
	7K		1300 nm, single-mode, Laser, 2 Channels
	7M		Channel 1 - RS422; Channel 2 - 1300 nm, multimode, LED
	7N		Channel 1 - RS422; Channel 2 - 1300 nm, single-mode, ELED
	7P		Channel 1 - RS422; Channel 2 - 1300 nm, single-mode, Laser

	UR - ** - *	
	7Q	Channel 1 - G.703; Channel 2 - 1300 nm, single-mode Laser
	7R	G.703, 1 Channel
	7S	G.703, 2 Channels
	7T	RS422, 1 Channel
	7W	RS422, 2 Channels
TRANSDUCER INPUTS/OUTPUTS	5A	4 DCmA inputs, 4 DCmA outputs (only one 5A or 5D module is allowed)
	5C	8 RTD inputs
	5D	4 RTD inputs, 4 DCmA outputs (only one 5A or 5D module is allowed)
	5E	4 DCmA inputs, 4 RTD inputs
	5F	8 DCmA inputs

2

2.4 Signal processing

2.4.1 UR signal processing

The UR series relays are microprocessor-based protective relays that are designed to measure power system conditions directly via CT and VT inputs and via other sources of information, such as analog inputs, communications inputs and contact inputs. The following figure shows the overall signal processing in URs.

An analog low pass anti-aliasing filter with a 3 dB corner frequency is set at 2.4 kHz and is used for current and voltage analog filtering as well as signal conditioning. The same filtering is applied for phase, ground currents, phase-to-phase (when applicable), and auxiliary voltages. The 2.4 kHz cut-off frequency applies to both 50 Hz and 60 Hz applications and fixed in the hardware, and thus is not dependent on the system nominal frequency setting.

Figure 2-3: UR signal processing

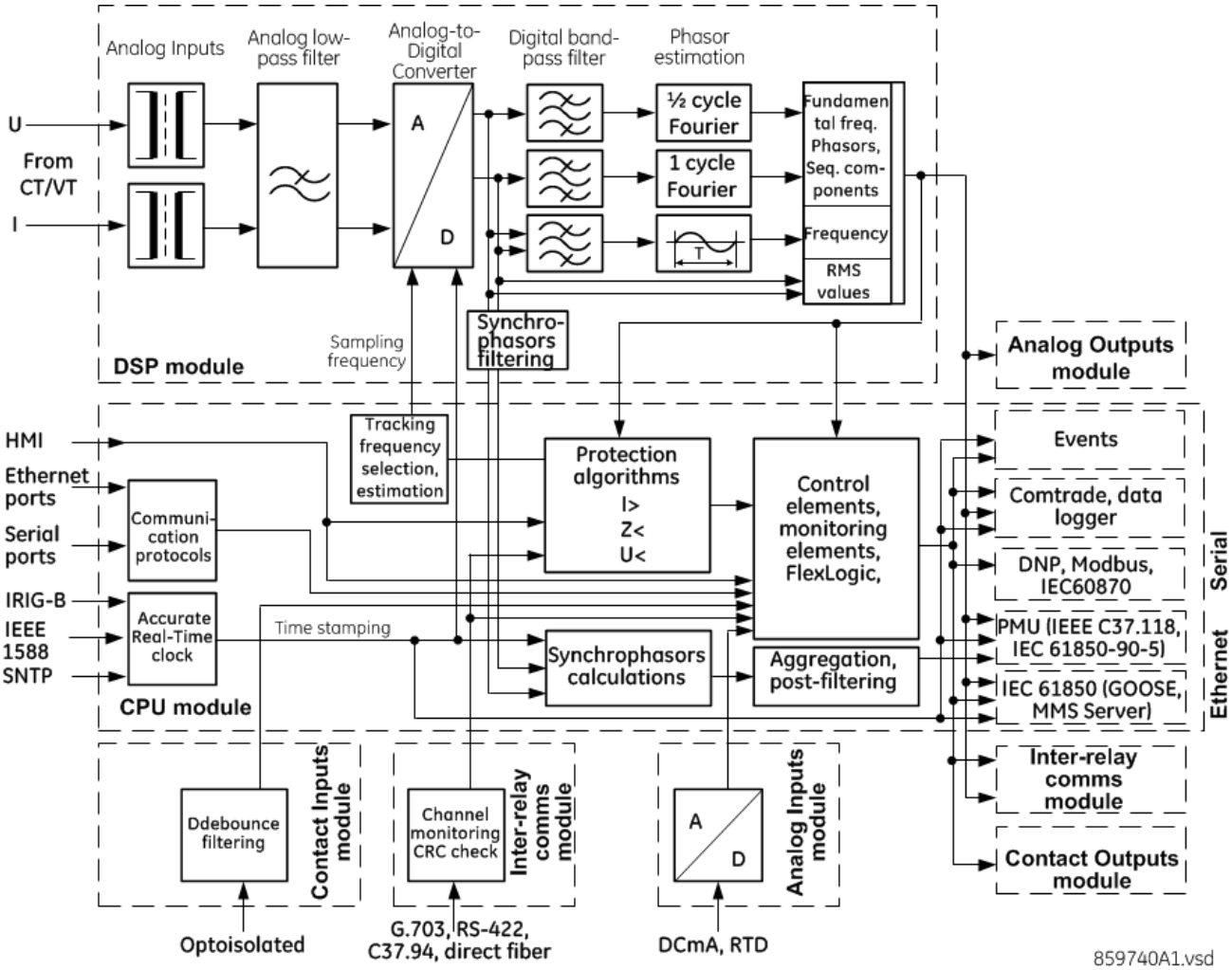

The UR samples its AC signals at 64 samples per cycle, that is, at 3840 Hz in 60 Hz systems, and 3200 Hz in 50 Hz systems. The sampling rate is dynamically adjusted to the actual system frequency by an accurate and fast frequency tracking system.

The A/D converter has the following ranges of AC signals:

Voltages:

$$\pm\sqrt{2}\cdot 260(V) \qquad \textbf{Eq. 2-1}$$

Currents:

$$\pm\sqrt{2}\cdot 46\text{rated}(A) \qquad \textbf{Eq. 2-2}$$

Current harmonics are estimated based on raw samples with the use of the full-cycle Fourier filter. Harmonics 2nd through 25th are estimated.

True RMS value for the current is calculated on a per-phase basis. The true RMS can be used for demand recording or as an input signal to Time Overcurrent function, if the latter is intended for thermal protection. The true RMS is calculated as per the widely accepted definition:

$$I_{RMS(t)} = \sqrt{\frac{1}{T}\int_{(t-T)}^{t} i^2(t)\,dt} \qquad \textbf{Eq. 2-3}$$

RMS values include harmonics, inter-harmonics, DC components, and so on, along with fundamental frequency values. The true RMS value reflects thermal effects of the current and is used for the thermal related monitoring and protection functions.

Protection and control functions respond to phasors of the fundamental and/or harmonic frequency components (magnitudes and angles), with an exception for some functions that have an option for RMS or fundamental measurements, or some function responding to RMS only. This type of response is explained typically in each element's section in the instruction manual.

Currents are pre-filtered using a Finite Impulse Response (FIR) digital filter. The filter is designed to reject DC components and low-frequency distortions, without amplifying high-frequency noise. This filter is referred to as a modified MIMIC filter, which provides excellent filtering and overall balance between speed and accuracy of filtering. The filter is cascaded with the full-cycle Fourier filter for the current phasor estimation.

Voltages are pre-filtered using a patented Finite Impulse Response (FIR) digital filter. The filter has been optimized to reject voltage transformers specific distortions, such as Capacitive Voltage Transformer (CVT) noise and high-frequency oscillatory components. The filter is cascaded with the half-cycle Fourier filter for the voltage phasor estimation.

The URs measure power system frequency using the Clarke transformation by estimating the period of the waveform from two consecutive zero-crossings in the same direction (negative-to-positive). Voltage or current samples are pre-filtered using a Finite Impulse Response (FIR) digital filter to remove high frequency noise contained in the signal. The period is used after several security conditions are met, such as true RMS signal must be above 6% nominal for a certain time and others. If these security conditions are not met, the last valid measurement is used for a specific time after which the UR reverts to nominal system frequency.

Synchrophasors are calculated using a patented convolution integral algorithm. This algorithm allows use of the same time-stamped samples, which are used for protection and taken at the same sampling frequency. This allows URs to use one sampling clock for both protection algorithms and synchrophasors.

Synchrophasors on firmware versions 7.23 and up have been tested and certified to meet IEEE C37.118-2011 and C37.118.1a-2014 standards for both metering and protection classes with outputs available up to 60 synchrophasors per second for the metering class and 120 synchrophasors per second for the protection class. Synchrophasors measurement are also available via IEC 61850-90-5 protocol.

Contact inputs threshold is settable in the firmware with 17, 33, 84, 166 VDC settings available. Inputs are scanned every 0.5 ms and can be conditioned for the critical applications, using debounce time timer, settable from 0.0 ms to 16.0 ms. Contact inputs with auto-burnishing are available as well, when external contacts are exposed to the contamination in a harsh industrial environment.

All measured values are available in the UR metering section on the front panel and via communications protocols. Measured analog values and binary signals can be captured in COMTRADE format with sampling rates from 8 to 64 samples per power cycle. Analog values can be captured with Data Logger, allowing much slower rates extended over long period of time.

Other advanced UR order code options are available to support IEC 61850 Ed2.0 (including fast GOOSE, MMS server, 61850 services, ICD/CID/IID files, and so on), IEEE 1588 (IEEE C37.238 power profile) based time synchronization, CyberSentry (advanced cyber security), the Parallel Redundancy Protocol (PRP), IEC 60870-5-103, and so on.

2.5 Specifications

Specifications are subject to change without notice.

2.5.1 Protection elements

The operating times include the activation time of a trip rated form-A output contact unless otherwise indicated. FlexLogic operands of a given element are 4 ms faster. Take this into account when using FlexLogic to interconnect with other protection or control elements of the relay, building FlexLogic equations, or interfacing with other intelligent electronic devices (IEDs) or power system devices via communications or different output contacts. If not specified, the operate times given here are for a 60 Hz system at nominal system frequency. Operate times for a 50 Hz system are 1.2 times longer. Timer Accuracy is specified as a percentage of the total operating time that is the sum of the Operate Time and settable Pickup Delay.

BUS DIFFERENTIAL (87B)

Pickup level:	0.050 to 6.000 pu in steps of 0.001
Low slope:	15 to 100% in steps of 1
High slope:	50 to 100% in steps of 1
Low breakpoint:	1.00 to 30.00 pu in steps of 0.01
High breakpoint:	1.00 to 30.00 pu in steps of 0.01
High set level:	0.10 to 99.99 pu in steps of 0.01
Dropout level:	97 to 98% of pickup
Characteristic accuracy:	±3% of the maximum circuit current or ±2% of rated (whichever is greater)
Operating time:	12.5 ms (typical) at 3x pickup at 60 Hz 9 ms (typical) at 10x pickup at 60 Hz
Number of zones:	2

CT TROUBLE

Responding to:	Differential current
Pickup level:	0.020 to 2.000 pu in steps of 0.001
Pickup delay:	1.0 to 60.0 sec. in steps of 0.1

PHASE/NEUTRAL/GROUND TOC

Current:	Phasor or RMS
Pickup level:	0.020 to 30.000 pu in steps of 0.001
Dropout level:	97% of pickup
Level accuracy:	
0.1 to 2.0 × CT:	±0.5% of reading or ±0.4% of rated (whichever is greater)
> 2.0 × CT:	±1.5% of reading > 2.0 × CT rating
Timing characteristics:	IEEE Moderately/Very/Extremely Inverse; IEC (and BS) A/B/C and Short Inverse; GE IAC Inverse, Short/Very/ Extremely Inverse; I^2t; FlexCurves™ (programmable); (Curve multiplier 0.00 to 600.00 in steps of 0.01 s) Definite Time (Time delay = 0.00 to 600.00 in steps of 0.01 s)
Reset type:	Instantaneous/Timed (per IEEE)

Curve timing accuracy at 1.03 to 20 × pickup:

	±3.5% of operate time or ±½ cycle (whichever is greater) from pickup to operate
Voltage restraint:	Modifies pickup current for voltage in the range of 0.1 < V < 0.9 VT Nominal in a fixed linear relationship

PHASE/NEUTRAL/GROUND IOC

Current:	Phasor only
Pickup level:	0.020 to 30.000 pu in steps of 0.001
Dropout level:	97% of pickup
Level accuracy:	
0.1 to 2.0 × CT rating:	±0.5% of reading or ±0.4% of rated (whichever is greater)
> 2.0 × CT rating:	±1.5% of reading
Overreach:	<2%
Pickup delay:	0.00 to 600.00 s in steps of 0.01
Reset delay:	0.00 to 600.00 s in steps of 0.01
Operate time:	<16 ms at 3 × pickup at 60 Hz (Phase/Ground IOC) <20 ms at 3 × pickup at 60 Hz (Neutral IOC)
Timer accuracy:	±3.5% of operate time or ±1/4 cycle (whichever is greater)

PHASE DIRECTIONAL OVERCURRENT

Relay connection:	90° (quadrature)
Quadrature voltage:	ABC phase seq.: phase A (V_{BC}), phase B (V_{CA}), phase C (V_{AB}); ACB phase seq.: phase A (V_{CB}), phase B (V_{AC}), phase C (V_{BA})
Polarizing voltage threshold:	0.004 to 3.000 pu in steps of 0.001
Current sensitivity threshold:	0.05 pu
Characteristic angle:	0 to 359° in steps of 1
Angle accuracy:	±2°
Operation time (FlexLogic operands):	
Tripping (reverse load, forward fault):	<12 ms, typically
Blocking (forward load, reverse fault):	<8 ms, typically

PHASE UNDERVOLTAGE

Pickup level:	0.004 to 3.000 pu in steps of 0.001
Dropout level:	102% of pickup
Level accuracy:	±0.5% of reading from 10 to 208 V
Timing characteristics:	GE IAV Inverse (Curve multiplier 0.00 to 600.00 in steps of 0.01 s) Definite Time (Time delay = 0.00 to 600.00 in steps of 0.01 s)
Curve timing accuracy at <0.90 × pickup:	
	±3.5% of operate time or ±1/2 cycle (whichever is greater) from pickup to operate
Operate time:	<30 ms at 0.9 pickup at 60 Hz for Definite Time mode

PHASE OVERVOLTAGE

Voltage:	Phasor only
Pickup level:	0.004 to 3.000 pu in steps of 0.001
Dropout level:	98% of pickup
Level accuracy:	±0.5% of reading from 10 to 208 V
Pickup delay:	0.00 to 600.00 in steps of 0.01 s
Operate time:	<30 ms at 1.10 × pickup at 60 Hz
Timer accuracy:	±3% of operate time or ±1/4 cycle (whichever is greater)

NEUTRAL OVERVOLTAGE

Pickup level:	0.004 to 3.000 pu in steps of 0.001
Dropout level:	97% of pickup
Level accuracy:	±0.5% of reading from 10 to 208 V
Pickup delay:	0.00 to 600.00 s in steps of 0.01 (definite time) or user-defined curve
Reset delay:	0.00 to 600.00 s in steps of 0.01
Curve timing accuracy at >1.1 pickup:	±3.5% of operate time or ±1 cycle (whichever is greater) from pickup to operate
Operate time:	<30 ms at 1.10 × pickup at 60 Hz

2

AUXILIARY OVERVOLTAGE

Pickup level:	0.004 to 3.000 pu in steps of 0.001
Dropout level:	97% of pickup
Level accuracy:	±0.5% of reading from 10 to 208 V
Pickup delay:	0 to 600.00 s in steps of 0.01
Reset delay:	0 to 600.00 s in steps of 0.01
Timer accuracy:	±3% of operate time or ±1/4 cycle (whichever is greater)
Operate time:	<30 ms at 1.10 × pickup at 60 Hz

BREAKER FAILURE

Mode:	1-pole, 3-pole
Current supervision:	phase, neutral current
Current supv. pickup:	0.020 to 30.000 pu in steps of 0.001
Current supv. dropout:	97% of pickup
Current supv. accuracy:	
0.1 to 2.0 × CT rating:	±0.75% of reading or ±2% of rated (whichever is greater)
above 2 × CT rating:	±2.5% of reading

BREAKER ARCING CURRENT

Principle:	accumulates breaker duty (I^2t) and measures fault duration
Initiation:	programmable per phase from any FlexLogic operand
Compensation for auxiliary relays:	0 to 65.535 s in steps of 0.001
Alarm threshold:	0 to 50000 kA^2-cycle in steps of 1
Fault duration accuracy:	0.25 of a power cycle
Availability:	1 per CT bank with a minimum of 2

BREAKER FLASHOVER

Operating quantity:	phase current, voltage, and voltage difference
Pickup level voltage:	0.004 to 1.500 pu in steps of 0.001
Dropout level voltage:	97% of pickup
Pickup level current:	0.020 to 1.500 pu in steps of 0.001
Dropout level current:	97% of pickup
Level accuracy:	±0.5% or ±0.1% of rated, whichever is greater
Pickup delay:	0 to 65.535 s in steps of 0.001
Timer accuracy:	±3% of operate time or ±42 ms, whichever is greater
Operate time:	<42 ms at 1.10 × pickup at 60 Hz

BREAKER RESTRIKE

Principle:	detection of high-frequency overcurrent condition ¼ cycle after breaker opens
Availability:	one per CT/VT module (not including 8Z modules)
Pickup level:	0.1 to 2.00 pu in steps of 0.01
Reset delay:	0.000 to 65.535 s in steps of 0.001

THERMAL OVERLOAD PROTECTION

Thermal overload curves:	IEC 255-8 curve
Base current:	0.20 to 3.00 pu in steps of 0.01
Overload (k) factor:	1.00 to 1.20 pu in steps of 0.05
Trip time constant:	0 to 1000 min. in steps of 1
Reset time constant:	0 to 1000 min. in steps of 1
Minimum reset time:	0 to 1000 min. in steps of 1
Timer accuracy (cold curve):	±100 ms or 2%, whichever is greater
Timer accuracy (hot curve):	±500 ms or 2%, whichever is greater for $I_p < 0.9 \times k \times I_b$ and $I / (k \times I_b) > 1.1$

TRIP BUS (TRIP WITHOUT FLEXLOGIC)

Number of elements:	6
Number of inputs:	16

Operate time:	<2 ms at 60 Hz
Timer accuracy:	±3% or 10 ms, whichever is greater

2.5.2 User-programmable elements

FLEXLOGIC

Programming language:	Reverse Polish Notation with graphical visualization (keypad programmable)
Lines of code:	1024
Internal variables:	64
Supported operations:	NOT, XOR, OR (2 to 16 inputs), AND (2 to 16 inputs), NOR (2 to 16 inputs), NAND (2 to 16 inputs), latch (reset-dominant), edge detectors, timers
Inputs:	any logical variable, contact, or virtual input
Number of timers:	32
Pickup delay:	0 to 60000 (ms, sec., min.) in steps of 1
Dropout delay:	0 to 60000 (ms, sec., min.) in steps of 1
Timer accuracy:	±0.1% of operate time or ±1/8 cycle, whichever is greater

FLEXCURVES™

Number:	4 (A through D)
Reset points:	40 (0 through 1 of pickup)
Operate points:	80 (1 through 20 of pickup)
Time delay:	0 to 65535 ms in steps of 1

FLEX STATES

Number:	up to 256 logical variables grouped under 16 Modbus addresses
Programmability:	any logical variable, contact, or virtual input

FLEXELEMENTS™

Number of elements:	8
Operating signal:	any analog actual value, or two values in differential mode
Operating signal mode:	signed or absolute value
Operating mode:	level, delta
Comparator direction:	over, under
Pickup level:	–90.000 to 90.000 pu in steps of 0.001
Hysteresis:	0.1 to 50.0% in steps of 0.1
Delta dt:	20 ms to 60 days
Pickup and dropout delay:	0.000 to 65.535 s in steps of 0.001

NON-VOLATILE LATCHES

Type:	set-dominant or reset-dominant
Number:	16 (individually programmed)
Output:	stored in non-volatile memory
Execution sequence:	as input prior to protection, control, and FlexLogic

USER-PROGRAMMABLE LEDs

Number:	48 plus trip and alarm
Programmability:	from any logical variable, contact, or virtual input
Reset mode:	self-reset or latched

LED TEST

Initiation:	from any contact input or user-programmable condition
Number of tests:	3, interruptible at any time
Duration of full test:	approximately 3 minutes
Test sequence 1:	all LEDs on
Test sequence 2:	all LEDs off, one LED at a time on for 1 s
Test sequence 3:	all LEDs on, one LED at a time off for 1 s

2

USER-DEFINABLE DISPLAYS

Number of displays:	16
Lines of display:	2 × 20 alphanumeric characters
Parameters:	up to 5, any Modbus register addresses
Invoking and scrolling:	keypad, or any user-programmable condition, including pushbuttons

CONTROL PUSHBUTTONS

Number of pushbuttons:	7
Operation:	drive FlexLogic operands

USER-PROGRAMMABLE PUSHBUTTONS (OPTIONAL)

Number of pushbuttons:	12 on basic front panel 16 on enhanced horizontal front panel 6 on enhanced vertical front panel
Mode:	self-reset, latched
Display message:	2 lines of 20 characters each
Drop-out timer:	0.00 to 60.00 s in steps of 0.05
Autoreset timer:	0.2 to 600.0 s in steps of 0.1
Hold timer:	0.0 to 10.0 s in steps of 0.1

SELECTOR SWITCH

Number of elements:	2
Upper position limit:	1 to 7 in steps of 1
Selecting mode:	time-out or acknowledge
Time-out timer:	3.0 to 60.0 s in steps of 0.1
Control inputs:	step-up and 3-bit
Power-up mode:	restore from non-volatile memory or synchronize to a 3-bit control input or synch/restore mode

DIGITAL ELEMENTS

Number of elements:	48
Operating signal:	any FlexLogic operand
Pickup delay:	0.000 to 999999.999 s in steps of 0.001
Dropout delay:	0.000 to 999999.999 s in steps of 0.001
Timing accuracy:	±3% or ±4 ms, whichever is greater

2.5.3 Monitoring

OSCILLOGRAPHY

Number of records:	3 to 64, configurable
Sampling rate:	8, 16, 32, or 64 samples per power cycle, configurable
Triggers:	any FlexLogic operand, configurable
Trigger position:	0 to 100%, configurable
Recorded data:	raw AC input channels up to 64 configured digital channels, representing any FlexLogic operand up to 16 configured analog channels, representing any measured analog value
Data storage:	in non-volatile memory
Format:	COMTRADE IEEE C37.111 (1999 or 2013)

EVENT RECORDER

Capacity:	1024 events
Time-tag:	to 1 microsecond
Triggers:	any FlexLogic operand, configurable
Data storage:	in non-volatile memory

USER-PROGRAMMABLE FAULT REPORT

Number of elements:	2
Pre-fault trigger:	any FlexLogic operand

Fault trigger:	any FlexLogic operand
Recorder quantities:	32 (any FlexAnalog™ value)

DATA LOGGER

Number of channels:	1 to 16
Parameters:	any available analog actual value
Sampling rate:	15 to 3600000 ms in steps of 1
Trigger:	any FlexLogic operand
Mode:	continuous or triggered
Storage capacity:	(NN is dependent on memory) 1-second rate: 01 channel for NN days 16 channels for NN days ↓ 60-minute rate: 01 channel for NN days 16 channels for NN days

2.5.4 Metering

RMS CURRENT: PHASE, NEUTRAL, AND GROUND

Accuracy at

0.1 to 2.0 × CT rating:	±0.25% of reading or ±0.1% of rated (whichever is greater)
> 2.0 × CT rating:	±1.0% of reading

RMS VOLTAGE

Accuracy:	±0.5% of reading from 10 to 208 V

REAL POWER (WATTS)

Accuracy at 0.1 to 1.5 × CT rating and 0.8 to 1.2 × VT rating:

±1.0% of reading at $-1.0 \le PF < -0.8$ and $0.8 < PF \le 10$

REACTIVE POWER (VARS)

Accuracy at 0.1 to 1.5 × CT rating and 0.8 to 1.2 × VT rating:

±1.0% of reading at $-0.2 \le PF \le 0.2$

APPARENT POWER (VA)

Accuracy at 0.1 to 1.5 × CT rating and 0.8 to 1.2 × VT rating:

±1.0% of reading

WATT-HOURS (POSITIVE AND NEGATIVE)

Accuracy:	±2.0% of reading
Range:	±0 to 1×10^6 MWh
Parameters:	three-phase only
Update rate:	50 ms

VAR-HOURS (POSITIVE AND NEGATIVE)

Accuracy:	±2.0% of reading
Range:	±0 to 1×10^6 Mvarh
Parameters:	three-phase only
Update rate:	50 ms

FREQUENCY

Accuracy for 20 to 65 Hz input at

V = 0.8 to 1.2 pu:	±0.001 Hz (when voltage signal is used for frequency measurement)
I = 0.1 to 0.25 pu:	±0.02 Hz (when current signal is used for frequency measurement)
I > 0.25 pu:	±0.005 Hz (when current signal is used for frequency measurement)

DEMAND

Measurements:	Phases A, B, and C present and maximum measured currents 3-Phase Power (P, Q, and S) present and maximum measured currents
Accuracy:	±2.0%

2.5.5 Inputs

AC CURRENT

CT rated primary:	1 to 50000 A
CT rated secondary:	1 A or 5 A by connection
Relay burden:	< 0.2 VA at rated secondary
Conversion range:	
Standard CT:	0.02 to 46 × CT rating RMS symmetrical
Sensitive Ground CT module:	0.002 to 4.6 × CT rating RMS symmetrical
Current withstand:	20 ms at 250 times rated 1 sec at 100 times rated continuous 4xInom URs equipped with 24 CT inputs have a maximum operating temperature of 50°C
Short circuit rating:	150000 RMS symmetrical amperes, 250 V maximum (primary current to external CT)

AC VOLTAGE

VT rated secondary:	25.0 to 240.0 V
VT ratio:	1.00 to 24000.00
Relay burden:	< 0.25 VA at 120 V
Conversion range:	1 to 275 V
Voltage withstand:	continuous at 260 V to neutral 1 min/hr at 420 V to neutral

FREQUENCY

Nominal frequency setting:	25 to 60 Hz
Sampling frequency:	64 samples per power cycle
Tracking frequency range:	20 to 70 Hz

CONTACT INPUTS

Dry contacts:	1000 Ω maximum
Wet contacts:	300 V DC maximum
Selectable thresholds:	17 V, 33 V, 84 V, 166 V
Tolerance:	±10%
Contacts per common return:	4
Recognition time:	< 1 ms
Debounce time:	0.0 to 16.0 ms in steps of 0.5
Continuous current draw:	4 mA (when energized)

CONTACT INPUTS WITH AUTO-BURNISHING

Dry contacts:	1000 Ω maximum
Wet contacts:	300 V DC maximum
Selectable thresholds:	17 V, 33 V, 84 V, 166 V
Tolerance:	±10%
Contacts per common return:	2
Recognition time:	< 1 ms
Debounce time:	0.0 to 16.0 ms in steps of 0.5
Continuous current draw:	4 mA (when energized)
Auto-burnish impulse current:	50 to 70 mA
Duration of auto-burnish impulse:	25 to 50 ms

DCMA INPUTS

Current input (mA DC):	0 to –1, 0 to +1, –1 to +1, 0 to 5, 0 to 10, 0 to 20, 4 to 20 (programmable)

Input impedance:	379 Ω ±10%
Conversion range:	–1 to + 20 mA DC
Accuracy:	±0.2% of full scale
Type:	Passive

RTD INPUTS

Types (3-wire):	100 Ω Platinum, 100 and 120 Ω Nickel, 10 Ω Copper
Sensing current:	5 mA
Range:	–50 to +250°C
Accuracy:	±2°C
Isolation:	36 V pk-pk

IRIG-B INPUT

IRIG formats accepted:	B000...B007, B120...B127
IRIG control bits:	IEEE Std C37.118.1-2011
Amplitude modulation:	1 to 10 V pk-pk
DC shift:	TTL–Compatible
Input impedance:	50 kΩ
Isolation:	2 kV

DIRECT INPUTS

Input points:	32
Remote devices:	16
Default states on loss of comms.:	On, Off, Latest/Off, Latest/On
Ring configuration:	Yes, No
Data rate:	64 or 128 kbps
CRC:	32-bit
CRC alarm:	
Responding to:	Rate of messages failing the CRC
Monitoring message count:	10 to 10000 in steps of 1
Alarm threshold:	1 to 1000 in steps of 1
Unreturned message alarm:	
Responding to:	Rate of unreturned messages in the ring configuration
Monitoring message count:	10 to 10000 in steps of 1
Alarm threshold:	1 to 1000 in steps of 1

TELEPROTECTION

Input points:	16
Remote devices:	3
Default states on loss of comms.:	On, Off, Latest/Off, Latest/On
Ring configuration:	No
Data rate:	64 or 128 kbps
CRC:	32-bit

2.5.6 Power supply

LOW RANGE

Nominal DC voltage:	24 to 48 V
Minimum DC voltage:	20 V
Maximum DC voltage:	75 V for SL power supply module
Voltage loss hold-up:	200 ms duration at maximum load

NOTE: Low range is DC only.

HIGH RANGE

Nominal DC voltage:	125 to 250 V
Minimum DC voltage:	88 V
Maximum DC voltage:	300 V

Nominal AC voltage: 100 to 240 V at 50/60 Hz
Minimum AC voltage: 88 V at 25 to 100 Hz
Maximum AC voltage: 265 V at 25 to 100 Hz
Voltage loss hold-up: 200 ms duration at maximum load

ALL RANGES

Volt withstand: 2 × Highest Nominal Voltage for 10 ms
Power consumption: typical = 15 to 20 W/VA
maximum = 45 W/VA
contact factory for exact order code consumption

INTERNAL FUSE

Ratings:
Low range power supply: 8 A / 250 V
High range power supply: 4 A / 250 V
Interrupting capacity:
AC: 100 000 A RMS symmetrical
DC: 10 000 A

2.5.7 Outputs

FORM-A RELAY

Make and carry for 0.2 s: 30 A as per ANSI C37.90
Carry continuous: 6 A
Break (DC inductive, L/R = 40 ms):

Voltage	Current
24 V	1 A
48 V	0.5 A
125 V	0.3 A
250 V	0.2 A

Operate time: < 4 ms
Contact material: silver alloy

LATCHING RELAY

Make and carry for 0.2 s: 30 A as per ANSI C37.90
Carry continuous: 6 A as per IEEE C37.90
Break (DC resistive as per IEC 61810-1):

Voltage	Current
24 V	6 A
48 V	1.6 A
125 V	0.4 A
250 V	0.2 A

Operate time: < 4 ms
Contact material: silver alloy
Control: separate operate and reset inputs
Control mode: operate-dominant or reset-dominant

FORM-A VOLTAGE MONITOR

Applicable voltage: approx. 15 to 250 V DC
Trickle current: approx. 1 to 2.5 mA

FORM-A CURRENT MONITOR

Threshold current: approx. 80 to 100 mA

FORM-C AND CRITICAL FAILURE RELAY

Make and carry for 0.2 s: 30 A as per ANSI C37.90
Carry continuous: 8 A
Break (DC inductive, L/R = 40 ms):

Voltage	Current
24 V	1 A
48 V	0.5 A
125 V	0.3 A
250 V	0.2 A

Operate time: < 8 ms
Contact material: silver alloy

FAST FORM-C RELAY

Make and carry: 0.1 A max. (resistive load)
Minimum load impedance:

Input voltage	Impedance	
	2 W Resistor	1 W Resistor
250 V DC	20 KΩ	50 KΩ
120 V DC	5 KΩ	2 KΩ
48 V DC	2 KΩ	2 KΩ
24 V DC	2 KΩ	2 KΩ

Note: values for 24 V and 48 V are the same due to a required 95% voltage drop across the load impedance.

Operate time: < 0.6 ms
Internal Limiting Resistor: 100 Ω, 2 W

SOLID-STATE OUTPUT RELAY

Operate and release time: <100 µs
Maximum voltage: 265 V DC
Maximum leakage current in off state
(excluding voltage monitor circuit current): 100 µA
Maximum continuous current: 5 A at 45°C; 4 A at 65°C
Make and carry:
for 0.2 s: 30 A as per ANSI C37.90
for 0.03 s: 300 A
Breaking capacity:

Specification	UL 508	Utility application (autoreclose scheme)	Industrial application
Operations per interval	5000 operations, 1 second on, 9 seconds off	5 operations 0.2 seconds on 0.2 seconds off within 1 minute	10000 operations 0.2 seconds on 30 seconds off
	1000 operations 0.5 seconds on, 0.5 seconds off		
Break capability (0 to 250 V DC)	3.2 A at L/R = 10 ms	10 A at L/R = 40 ms	10 A at L/R = 40 ms
	1.6 A at L/R = 20 ms		
	0.8 A L/R = 40 ms		

CONTROL POWER EXTERNAL OUTPUT (FOR DRY CONTACT INPUT)

Capacity: 100 mA DC at 48 V DC
Isolation: ±300 Vpk

DIRECT OUTPUTS

Output points: 32

DCMA OUTPUTS

Range: –1 to 1 mA, 0 to 1 mA, 4 to 20 mA
Max. load resistance: 12 kΩ for –1 to 1 mA range
12 kΩ for 0 to 1 mA range
600 Ω for 4 to 20 mA range
Accuracy: ±0.75% of full-scale for 0 to 1 mA range
±0.5% of full-scale for –1 to 1 mA range
±0.75% of full-scale for 0 to 20 mA range
99% Settling time to a step change: 100 ms
Isolation: 1.5 kV
Driving signal: any FlexAnalog quantity
Upper and lower limit for the driving signal: –90 to 90 pu in steps of 0.001

2.5.8 Communication protocols

IEC 61850

IEC 61850: Supports IEC 61850 Edition 2.0. See the UR Family Communications Guide and its conformance statements.

RS232

Front port: 19.2 or 115.2 kbps, Modbus RTU

RS485

1 rear port: up to 115 kbps, Modbus RTU, DNP 3, IEC 60870-5-103
Typical distance: 1200 m
Isolation: 2 kV, isolated together at 36 Vpk

FIBER ETHERNET PORT

Operates with 50/125 µm and 62.5/125 µm multimode fiber

Parameter	Fiber type
	100 Mb multimode
Wavelength	1310 nm
Connector	LC
Transmit power	–20 dBm
Receiver sensitivity	–30 dBm
Power budget	10 dB
Maximum input power	–14 dBm
Typical distance	2 km
Full duplex	yes
Redundancy	yes

ETHERNET (10/100 MB TWISTED PAIR)

Modes: 10 Mb, 10/100 Mb (auto-detect)
Connector: RJ45

SIMPLE NETWORK TIME PROTOCOL (SNTP)

Clock synchronization error: <10 ms (typical)

PRECISION TIME PROTOCOL (PTP)

PTP IEEE Std 1588-2008 (version 2)
Power Profile (PP) per IEEE Standard PC37.238-2011
Slave-only ordinary clock

Peer delay measurement mechanism

PARALLEL REDUNDANCY PROTOCOL (PRP)
(IEC 62439-3 CLAUSE 4, 2012)

Ethernet ports used: 2 and 3
Networks supported: 10/100 Mb Ethernet

OTHER

TFTP, SFTP, HTTP, IEC 60870-5-104, Ethernet Global Data (EGD), IEEE C37.118

2.5.9 Inter-relay communications

SHIELDED TWISTED-PAIR INTERFACE OPTIONS

Interface type	Typical distance
RS422	1200 m
G.703	100 m

NOTE

RS422 distance is based on transmitter power and does not take into consideration the clock source provided by the user.

LINK POWER BUDGET AND MAXIMUM OPTICAL INPUT POWER

The following specifications apply to filter interface modules manufactured from January 2012.

Emitter, fiber type	Cable type	Transmit power	Received sensitivity	Power budget	Maximum optical input power
820 nm, Multimode	62.5/125 µm	-16 dBm	-32 dBm	16 dBm	-8 dBm
	50/125 µm	-20 dBm		12 dBm	
1300 nm, Multimode	62.5/125 µm	-16 dBm	-32 dBm	16 dBm	-8 dBm
	50/125 µm	-20 dBm		12 dBm	
1300 nm, Single mode	9/125 µm	-15 dBm	-32 dBm	17 dBm	-8 dBm
1300 nm Laser, Single mode	9/125 µm	0 dBm	-34 dBm	34 dBm	-8 dBm
1550 nm Laser, Single mode	9/125 µm	5 dBm	-34 dBm	39 dBm	-10 dBm

The following specifications apply to filter interface modules implemented before January 2012.

Emitter, fiber type	Transmit power	Received sensitivity	Power budget	Maximum optical input power
820 nm LED, Multimode	–20 dBm	–30 dBm	10 dB	–7.6 dBm
1300 nm LED, Multimode	–21 dBm	–30 dBm	9 dB	–11 dBm
1300 nm ELED, Single mode	–23 dBm	–32 dBm	9 dB	–14 dBm
1300 nm Laser, Single mode	–1 dBm	–30 dBm	29 dB	–14 dBm
1550 nm Laser, Single mode	+5 dBm	–30 dBm	35 dB	–14 dBm

NOTE

The power budgets are calculated from the manufacturer's worst-case transmitter power and worst case receiver sensitivity.

The power budgets for the 1300 nm ELED are calculated from the manufacturer's transmitter power and receiver sensitivity at ambient temperature. At extreme temperatures these values deviate based on component tolerance. On average, the output power decreases as the temperature is increased by a factor of 1 dB / 5 °C.

TYPICAL LINK DISTANCE

Emitter, fiber type	Cable type	Connector type	Typical distance	
			Before January 2012	From January 2012
820 nm LED, multimode	62.5/125 µm	ST	1.65 km	2 km
	50/125 µm	ST	1.65 km	2 km
1300 nm LED, multimode	62.5/125 µm	ST	4 km	5 km
	50/125 µm	ST	4 km	5 km
1300 nm ELED, single mode	9/125 µm	ST	11.4 km	20 km
1300 nm Laser, single mode	9/125 µm	ST	64 km	65 km
1550 nm Laser, single mode	9/125 µm	ST	105 km	125 km

NOTE

Typical distances listed are based on the following assumptions for system loss. As actual losses vary from one installation to another, the distance covered by your system can vary.

CONNECTOR LOSSES (TOTAL OF BOTH ENDS)

ST connector: 0.7 dB (each)

FIBER LOSSES

820 nm multimode: 3 dB/km
1300 nm multimode: 1 dB/km
1300 nm single mode: 0.35 dB/km
1550 nm single mode: 0.25 dB/km
Splice losses: one splice every 2 km at 0.05 dB loss per splice

SYSTEM MARGIN

3 dB additional loss added to calculations to compensate for all aging and other losses.

Compensated difference in transmitting and receiving (channel asymmetry) channel delays using GPS satellite clock: 10 ms

2.5.10 CyberSentry security

OPTIONS

Software options: Level 1

2.5.11 Environmental

AMBIENT TEMPERATURES

Maximum operating range: –40 to 85°C

Continuous operating range: –40 to 60°C[1]

1 Based on IEC 60068-2-1 and IEC 60068-2-2, Variant Bd and Ad for 16 hrs. The UR can operate up to a surrounding ambient of 85°C, however operating outside the recommended continuous temperature range for extended periods can result in MTBF degradation and decrease the response time of the LCD.

HUMIDITY

Humidity: operating up to 95% (non-condensing) at 55°C (as per IEC60068-2-30 variant 1, 6 days)

OTHER

Altitude: 2000 m (maximum)

Pollution degree: II

Overvoltage category: II

Ingress protection: IP20 front, IP10 back (basic front panel and Rev. 1 enhanced front panel)
IP40 front, IP10 back (Rev. 2 enhanced front panel)
IP54 front with IP54 mounting collar accessory (Rev. 2 enhanced front panel)

Noise: 0 dB

2.5.12 Type tests

B30 TYPE TESTS

Test	Reference standard	Test level
Dielectric voltage withstand	EN 60255-5[1]	2.2 kV
Impulse voltage withstand	EN 60255-5[1]	5 kV
Damped oscillatory	IEC 61000-4-18 / IEC 60255-22-1	2.5 kV CM, 1 kV DM
Electrostatic discharge	EN 61000-4-2 / IEC 60255-22-2	Level 3
RF immunity	EN 61000-4-3 / IEC 60255-22-3	Level 3
Fast transient disturbance	EN 61000-4-4 / IEC 60255-22-4	Class A and B
Surge immunity	EN 61000-4-5 / IEC 60255-22-5	Level 3 and 4
Conducted RF immunity	EN 61000-4-6 / IEC 60255-22-6	Level 3
Power frequency immunity	EN 61000-4-7[1] / IEC 60255-22-7	Class A and B
Voltage interruption and ripple DC	IEC 60255-11	12% ripple, 200 ms interrupts
Radiated and conducted emissions	CISPR11 / CISPR22 / IEC 60255-25	Class A
Sinusoidal vibration	IEC 60255-21-1	Class 1
Shock and bump	IEC 60255-21-2	Class 1
Seismic	IEC 60255-21-3	Class 1
Power magnetic immunity	IEC 61000-4-8	Level 5
Pulse magnetic immunity	IEC 61000-4-9	Level 4
Damped magnetic immunity	IEC 61000-4-10	Level 4
Voltage dip and interruption	IEC 61000-4-11	0, 40, 70, 80% dips; 250 / 300 cycle interrupts
Damped oscillatory	IEC 61000-4-12[1]	2.5 kV CM, 1 kV DM
Conducted RF immunity, 0 to 150 kHz	IEC 61000-4-16	Level 4
Voltage ripple	IEC 61000-4-17	15% ripple
Ingress protection	IEC 60529[1]	IP20 front, IP10 back
Cold	IEC 60068-2-1	–40°C for 16 hours
Hot	IEC 60068-2-2	85°C for 16 hours
Humidity	IEC 60068-2-30	6 days, variant 1
Damped oscillatory	IEEE/ANSI C37.90.1	2.5 kV, 1 MHz
RF immunity	IEEE/ANSI C37.90.2	20 V/m, 80 MHz to 1 GHz
Safety	UL 508	e83849 NKCR
Safety	UL C22.2-14	e83849 NKCR7
Safety	UL 1053	e83849 NKCR
Safety	IEC 60255-27	Insulation: class 1, Pollution degree: 2, Over voltage cat II

1 Not tested by third party.

2.5.13 Production tests

THERMAL

Products go through an environmental test based upon an Accepted Quality Level (AQL) sampling process.

2.5.14 Approvals

APPROVALS

Compliance	Applicable council directive	According to
CE	Low voltage directive	EN 60255-5
	EMC directive	EN 60255-26 / EN 50263
		EN 61000-6-5
C-UL-US	---	UL 508
		UL 1053
		C22.2 No. 14

2.5.15 Maintenance

MOUNTING

Attach mounting brackets using 20 inch-pounds (±2 inch-pounds) of torque.

CLEANING

Normally, cleaning is not required. When dust has accumulated on the faceplate display, wipe with a dry cloth.

NOTICE To avoid deterioration of electrolytic capacitors, power up units that are stored in a de-energized state once per year, for one hour continuously.

B30 Bus Differential System

Chapter 3: Installation

This chapter outlines installation of hardware and software. You unpack, check, mount, and wire the unit, then install the software and configure settings.

3.1 Unpack and inspect

Use this procedure to unpack and inspect the unit.

1. Open the relay package and check that the following items have been delivered:
   - B30
   - Mounting screws
   - GE EnerVista™ DVD (software and documentation)
   - B30 Instruction Manual (soft copy on DVD; printed copy if ordered)
   - UR Family Communications Guide (soft copy on DVD; printed copy if Instruction Manual ordered)
   - Certificate of Calibration
   - Test Report
   - EC Declaration of Conformity
   - Front panel label templates and tool
2. Inspect the unit for physical damage.
3. View the rear nameplate and verify that the correct model has been delivered. The model number is at the top right.

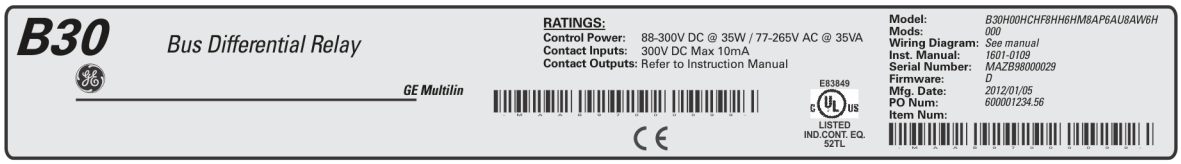

836781A3.CDR

4. For any issues, contact GE Grid Solutions as outlined in the For Further Assistance section in chapter 1.
5. Check that you have the latest copy of the B30 Instruction Manual and the UR Family Communications Guide, for the applicable firmware version, at http://www.gegridsolutions.com/multilin/manuals/index.htm

The Instruction Manual outlines how to install, configure, and use the unit. The Communications Guide is for advanced use with communication protocols. The warranty is included at the end of this instruction manual and on the GE Grid Solutions website.

3.2 Panel cutouts

This section does not apply to the HardFiber Brick; see its instruction manual.

Install the relay in an indoor environment within the environmental specifications. The relay complies with Pollution Category II, which means installation in an office, laboratory, or testing environment.

NOTE

The front panel can be switched in the EnerVista software between enhanced and standard panels under **Maintenance > Change Front Panel**.

3.2.1 Horizontal units

The B30 is available as a 19-inch rack horizontal mount unit with a removable faceplate. The faceplate can be specified as either basic or enhanced at the time of ordering. The enhanced faceplate contains additional user-programmable pushbuttons and LED indicators.

The modular design allows the relay to be upgraded and repaired by qualified service personnel. The faceplate is hinged to allow access to the removable modules, and is itself removable to allow mounting on doors with limited rear depth.

In November 2017, GE began transitioning to Rev. 2 of the enhanced horizontal front panel. This panel can be identified by the use of a screw instead of a knob to close the panel. It can conform to an IP54 rating with the IP54 mounting collar purchased separately. The IP54 mounting collar can be used in panel-mount installations, not 19-inch rack-mount installations. The IP54 mounting collar cannot be used with Rev. 1 enhanced front panels.

The case dimensions are shown in the following figure, along with panel cutout details for panel mounting. When planning the location of your panel cutout, ensure that provision is made for the faceplate to swing open without interference to or from adjacent equipment.

The relay must be mounted such that the faceplate sits semi-flush with the panel or switchgear door, allowing the operator access to the keypad and the RS232 communications port. The relay is secured to the panel with the use of four screws supplied with the relay.

Figure 3-1: Horizontal dimensions (Rev. 1 enhanced front panel)

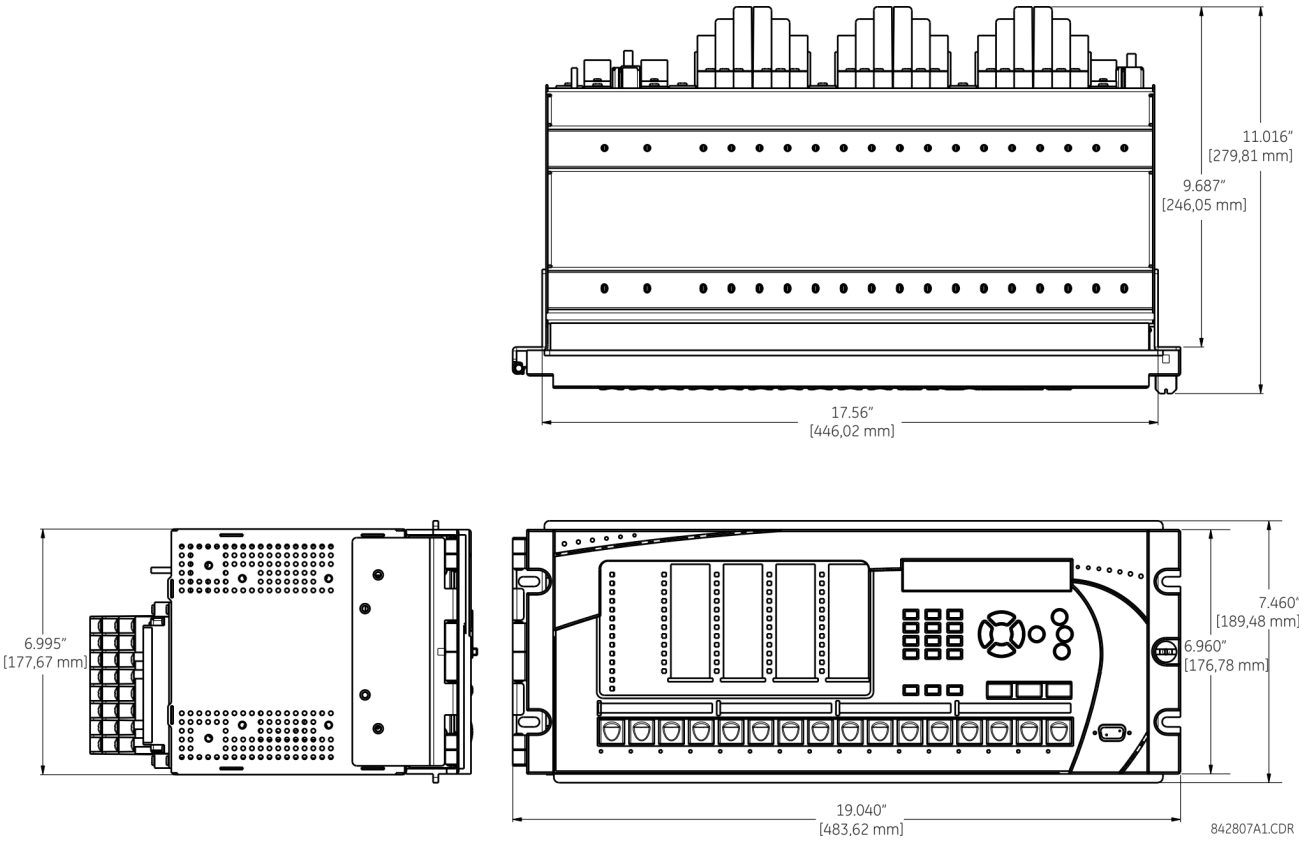

3

Figure 3-2: Horizontal dimensions (Rev. 2 enhanced front panel)

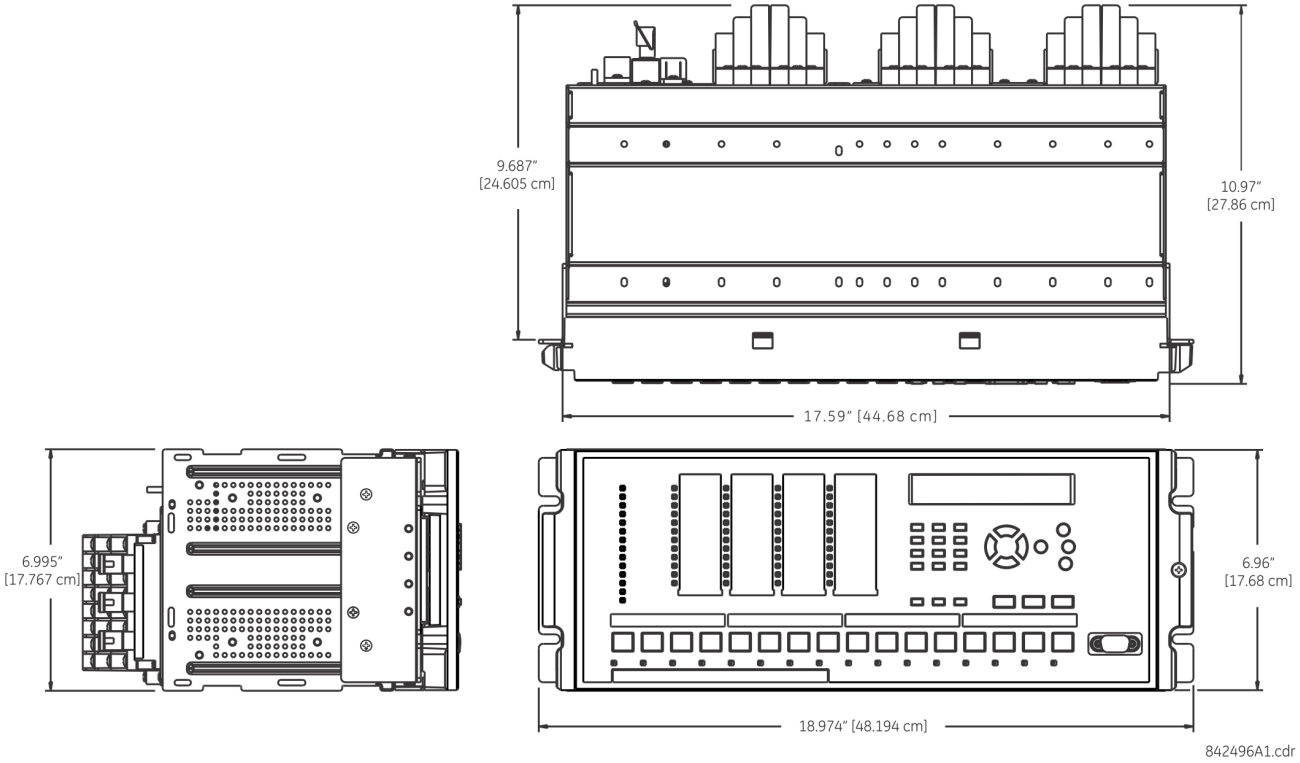

Figure 3-3: Horizontal mounting (enhanced front panel)

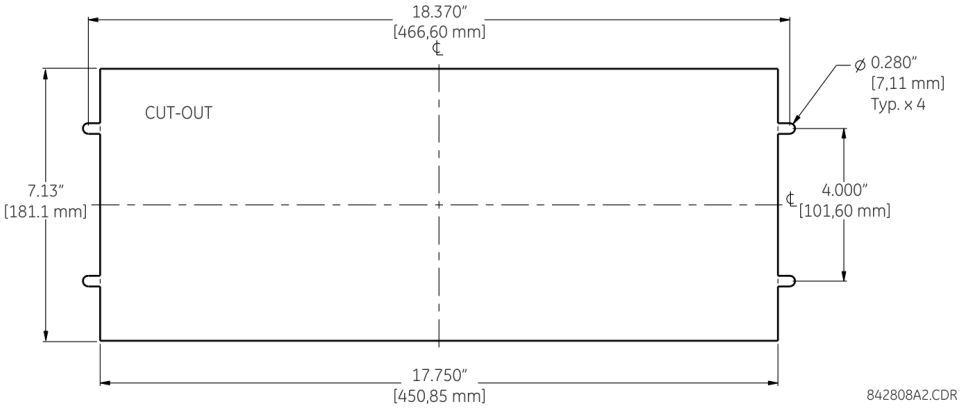

Figure 3-4: Horizontal mounting and dimensions (basic front panel)

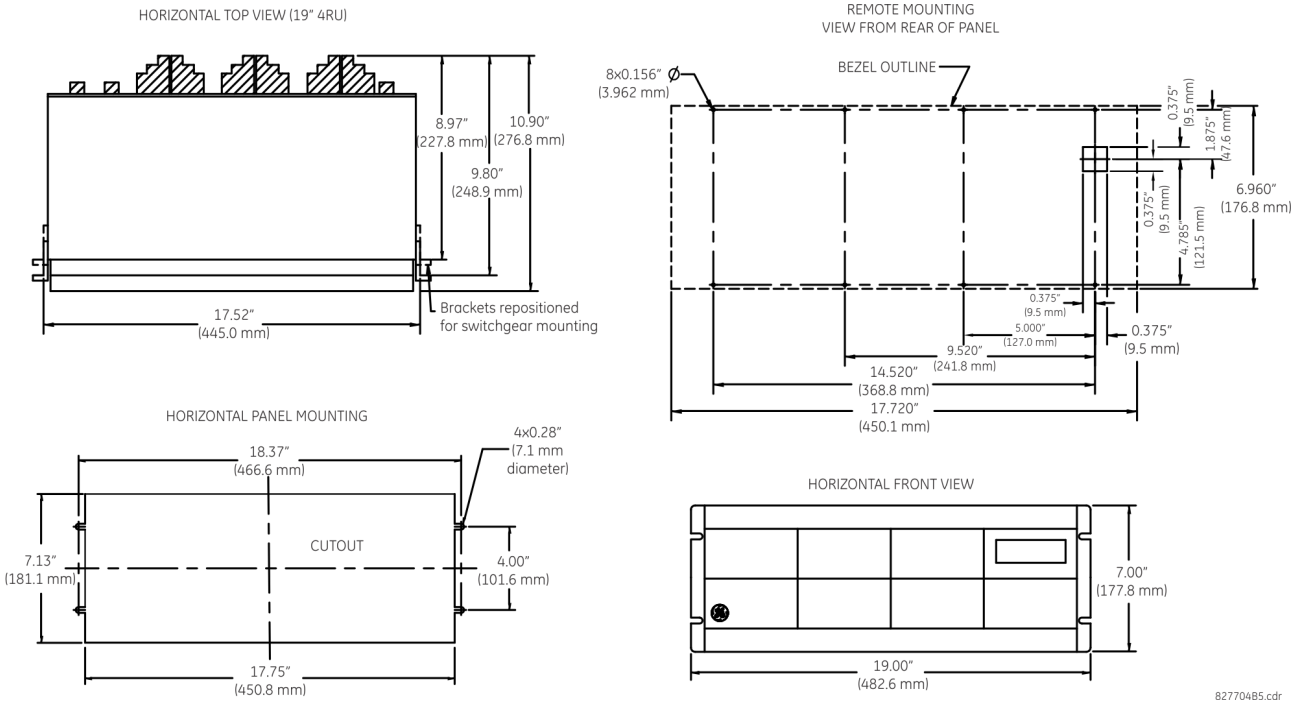

Figure 3-5: Horizontal dimensions (IP54 mounting collar)

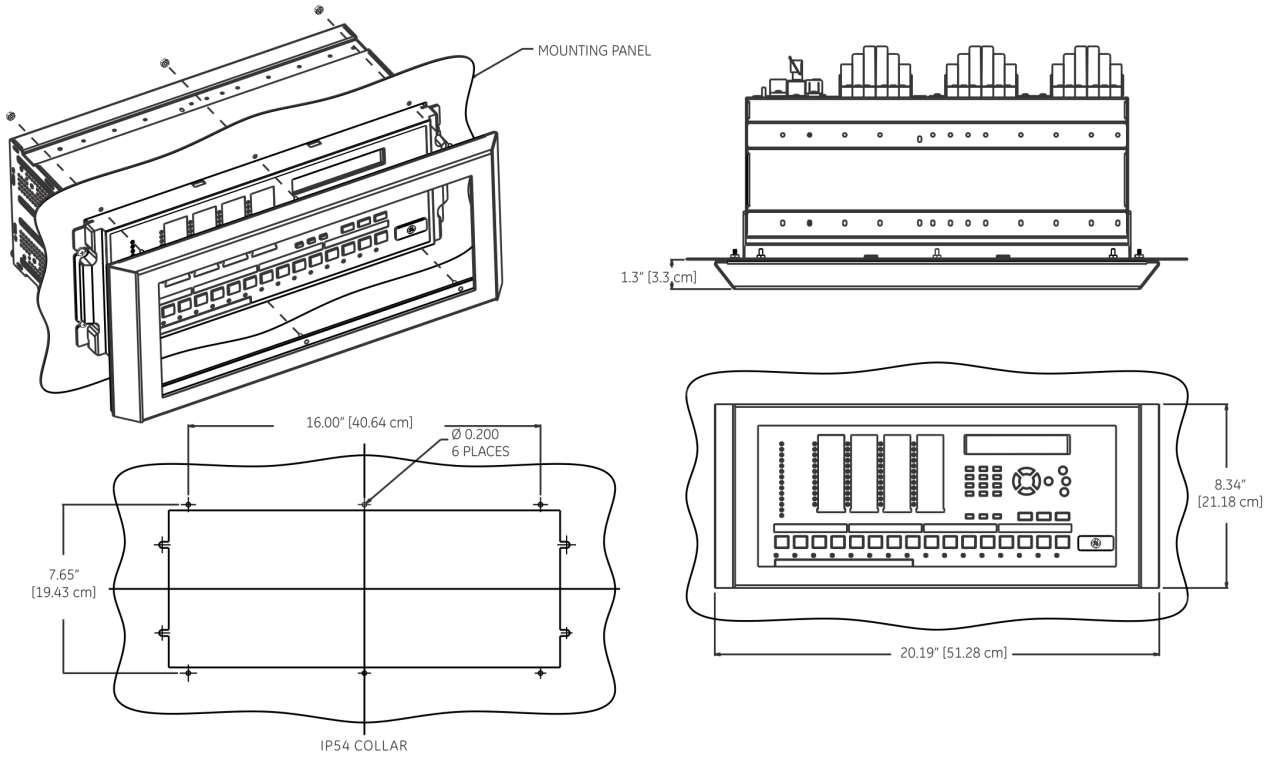

NOTES
1. INSPECT THE COLLAR BEFORE INSTALLATION, VERIFY GASKET IS ADHERED TO THE METAL ON ALL SIDES
2. MAKE SURE THE RELAY IS POSITIONED CENTER TO THE CUT OUT
3. INSTALL IP-54 COLLAR, CONFIRM THE GASKET PROPERLY MATES WITH THE PANEL ON ALL SIDES
SECURE USING #8-32 HEX NUT AT 6 PLACES.

842497A1.cdr

3.2.2 Vertical units

The B30 is available as a reduced size (¾) vertical mount unit, with a removable faceplate. The faceplate can be specified as either basic or enhanced at the time of ordering. The enhanced faceplate contains additional user-programmable pushbuttons and LED indicators.

The modular design allows the relay to be upgraded and repaired by qualified service personnel. The faceplate is hinged to allow easy access to the removable modules, and is itself removable to allow mounting on doors with limited rear depth.

The case dimensions are shown in the following figure, along with panel cutout details for panel mounting. When planning the location of your panel cutout, ensure that provision is made for the faceplate to swing open without interference to or from adjacent equipment.

The relay must be mounted such that the faceplate sits semi-flush with the panel or switchgear door, allowing the operator access to the keypad and the RS232 communications port. The relay is secured to the panel with the use of four screws supplied with the relay.

Figure 3-6: Vertical dimensions (enhanced panel)

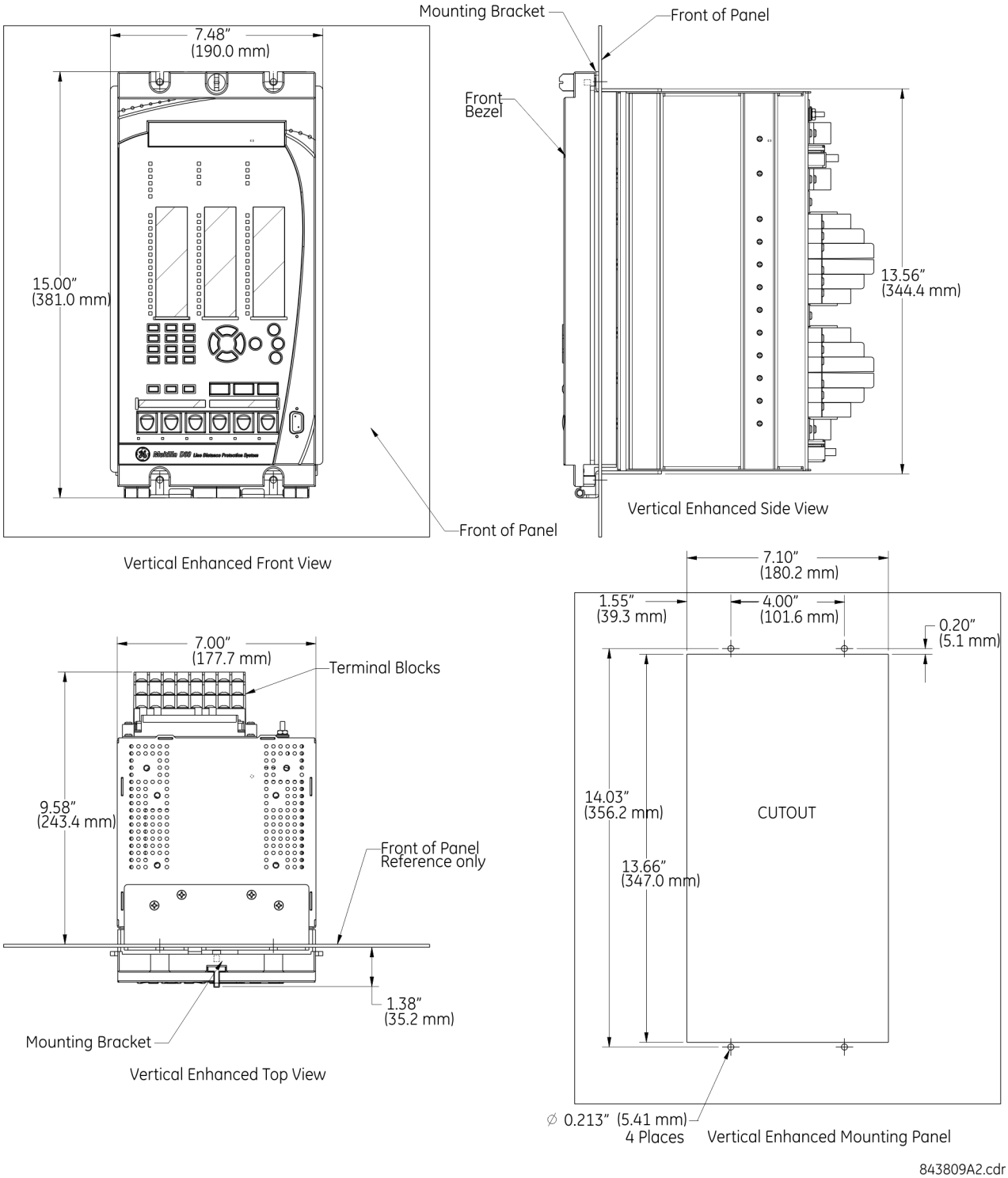

3

Figure 3-7: Vertical and mounting dimensions (basic panel)

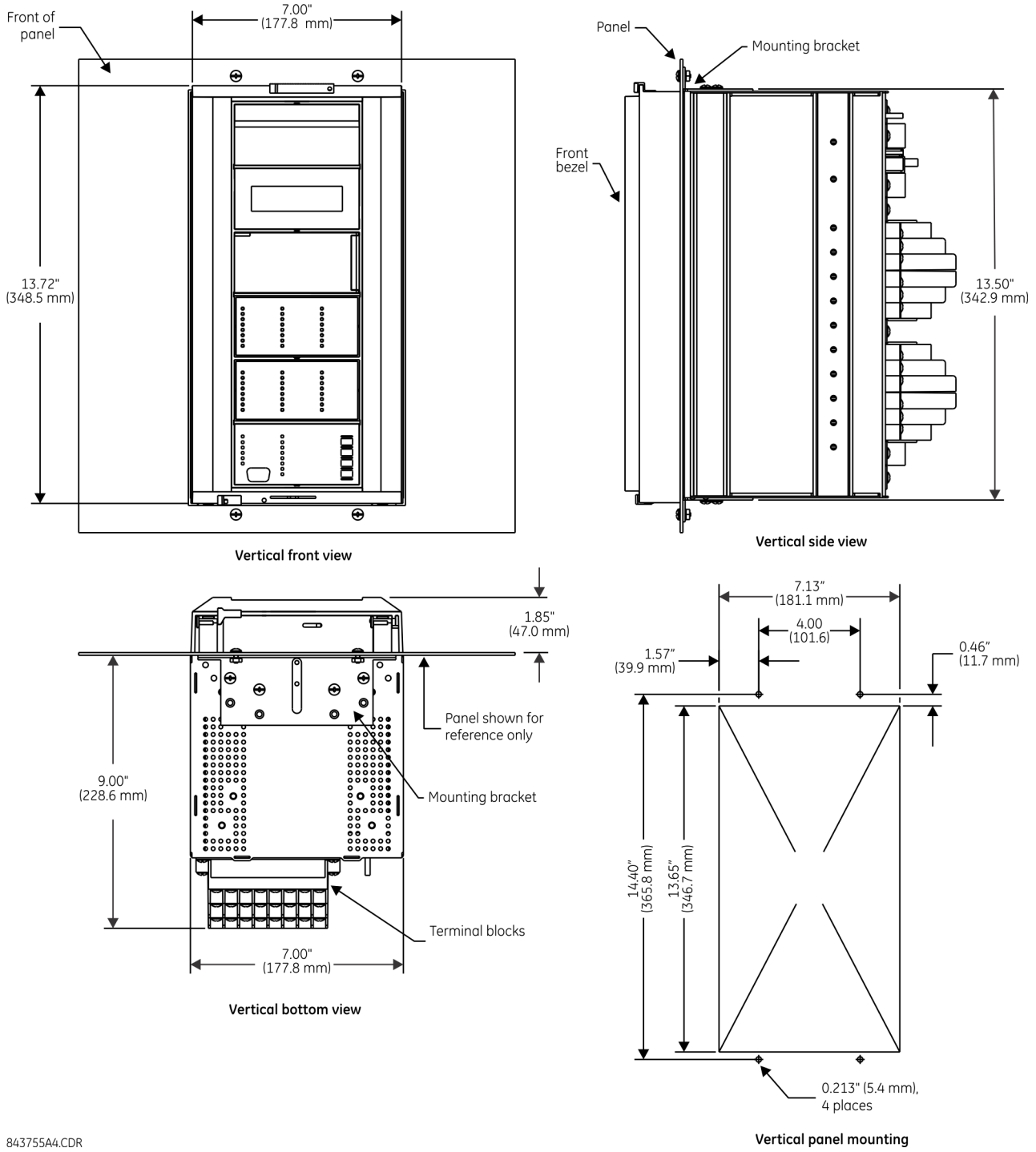

For side-mounting B30 devices with the enhanced front panel, see the following documents available on the UR DVD and the GE Grid Solutions website:

- GEK-113180 — UR-Series UR-V Side-Mounting Front Panel Assembly Instructions
- GEK-113181 — Connecting a Remote UR-V Enhanced Front Panel to a Vertical UR Device Instruction Sheet
- GEK-113182 — Connecting a Remote UR-V Enhanced Front Panel to a Vertically-Mounted Horizontal UR Device Instruction Sheet

For side-mounting B30 devices with the basic front panel, use the following figures.

Figure 3-8: Vertical side-mounting installation (basic panel)

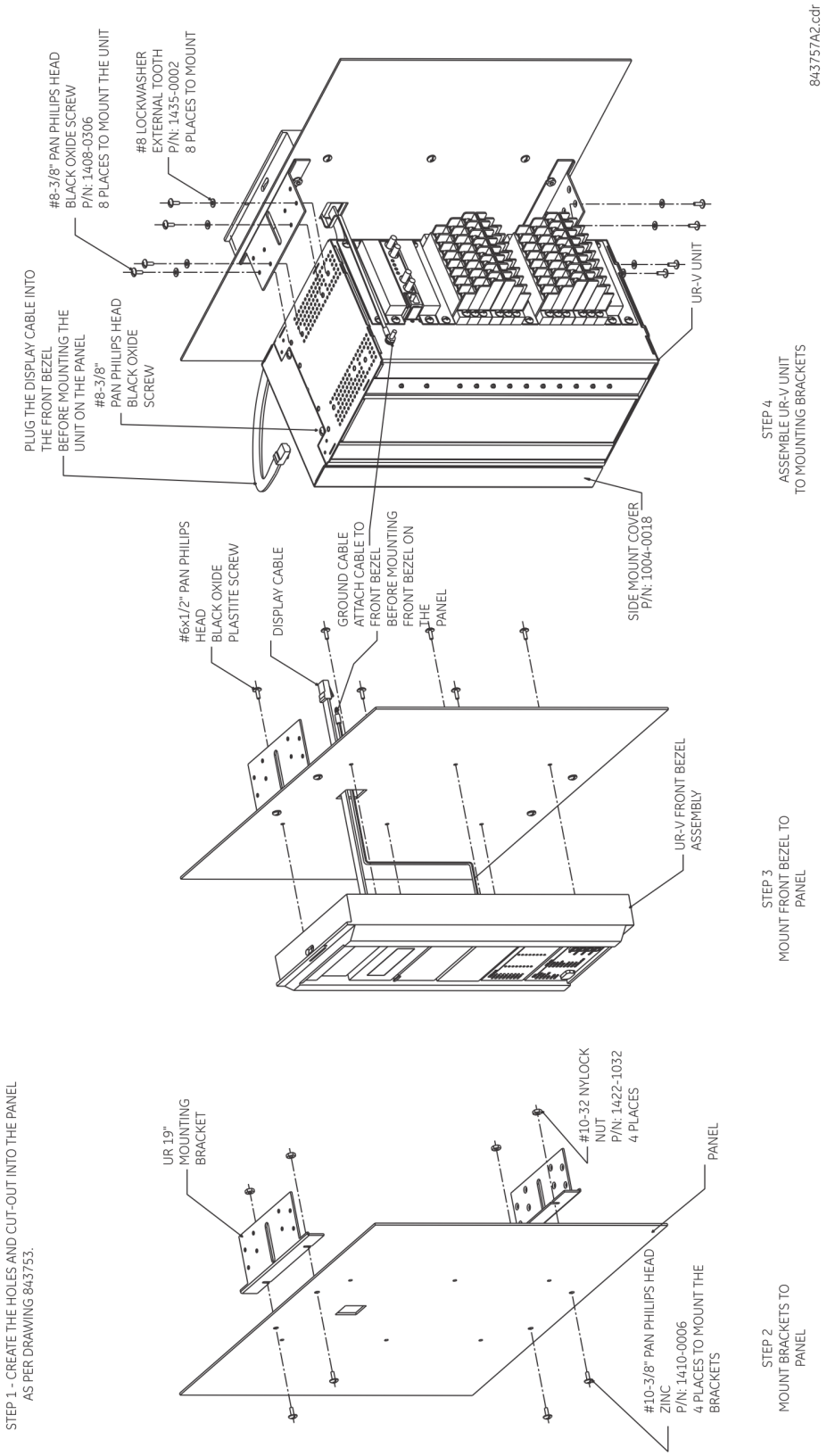

3

Figure 3-9: Vertical side-mounting rear dimensions (basic panel)

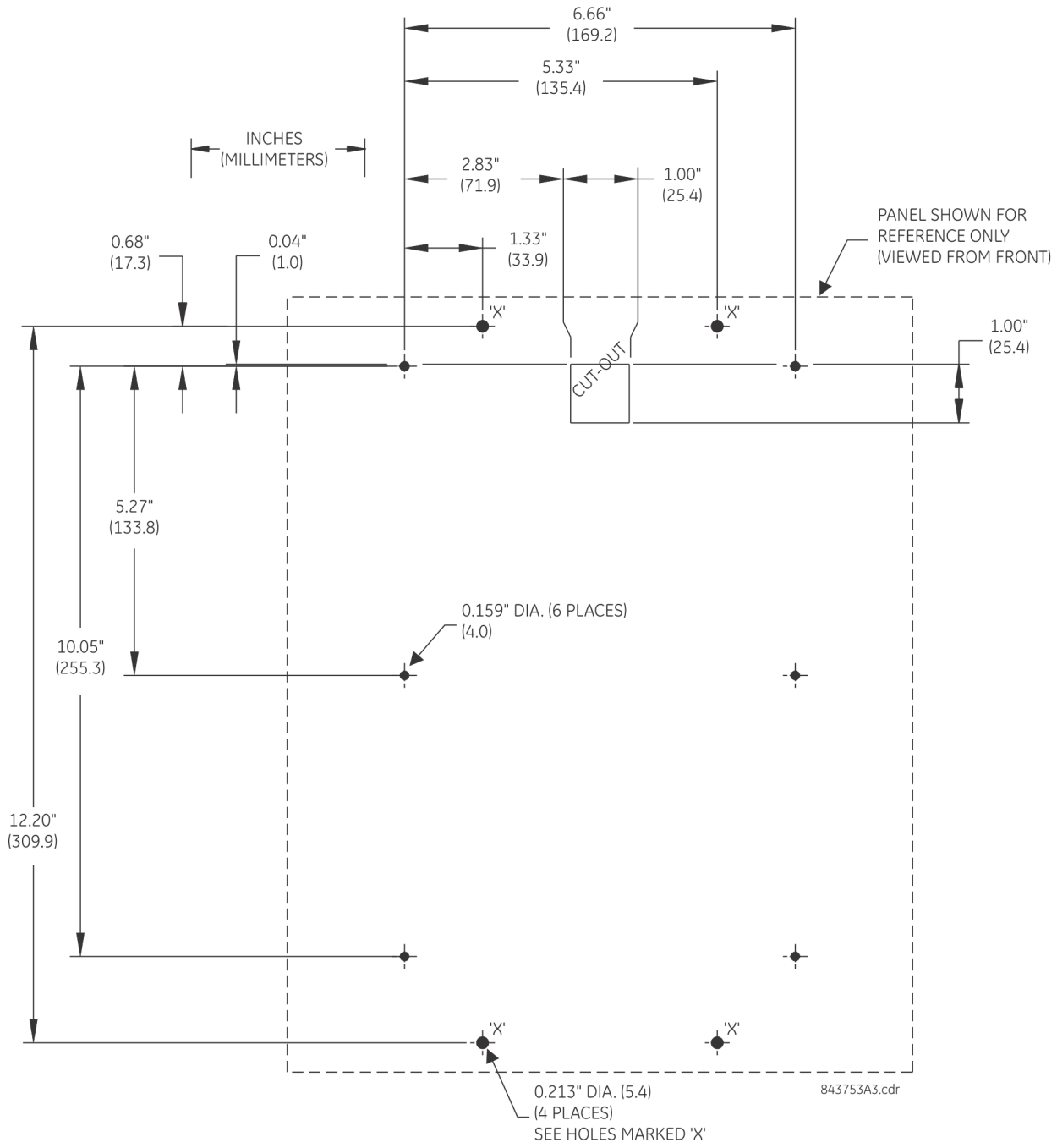

3.2.3 Rear terminal layout

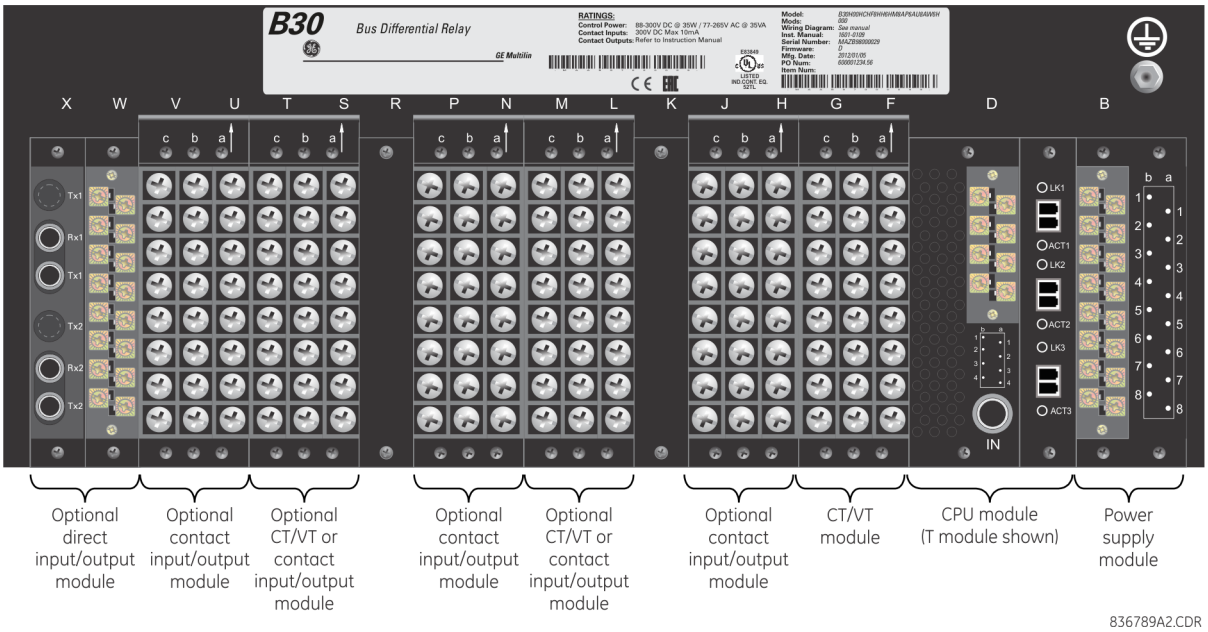

WARNING **Do not touch any rear terminals while the relay is energized, else death or serious injury can result from electrical shock.**

NOTICE The small form-factor pluggable ports (SFPs) are pluggable transceivers. Do not use non-validated transceivers or install validated transceivers in the wrong Ethernet slot, else damage can occur.

The relay follows a convention with respect to terminal number assignments, which are three characters long and assigned by module slot position, row number, and column letter. Two-slot wide modules take their slot designation from the first slot position (nearest to CPU module), indicated by an arrow marker on the terminal block. The figure shows an example of rear terminal assignments.

Figure 3-10: Example of modules in F and H slots

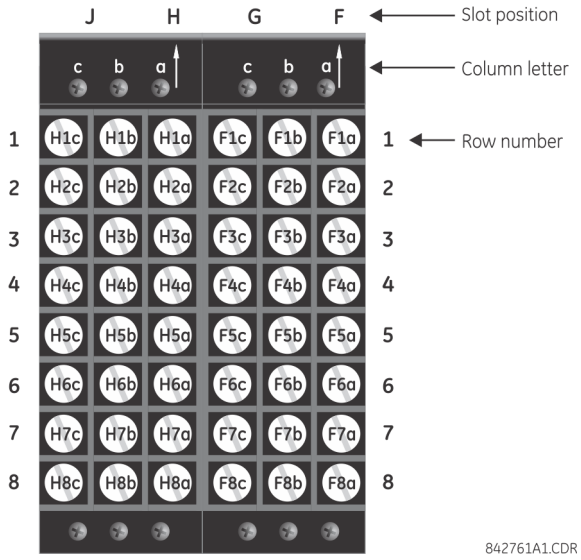

The torque used to connect the terminal blocks to the back of the relay chassis (screws a, b, c shown) is 9 inch-pounds. For the connections to the terminal blocks (rows 1 to 8), use a minimum of 17 inch-pounds. During manufacturing, the power supply and CPU modules are installed in slots B and D of the chassis with 13 inch-pounds of torque on the screws at the top and bottom of the modules.

3.3 Wiring

3.3.1 Typical wiring

Figure 3-11: Typical wiring diagram (T module shown for CPU)

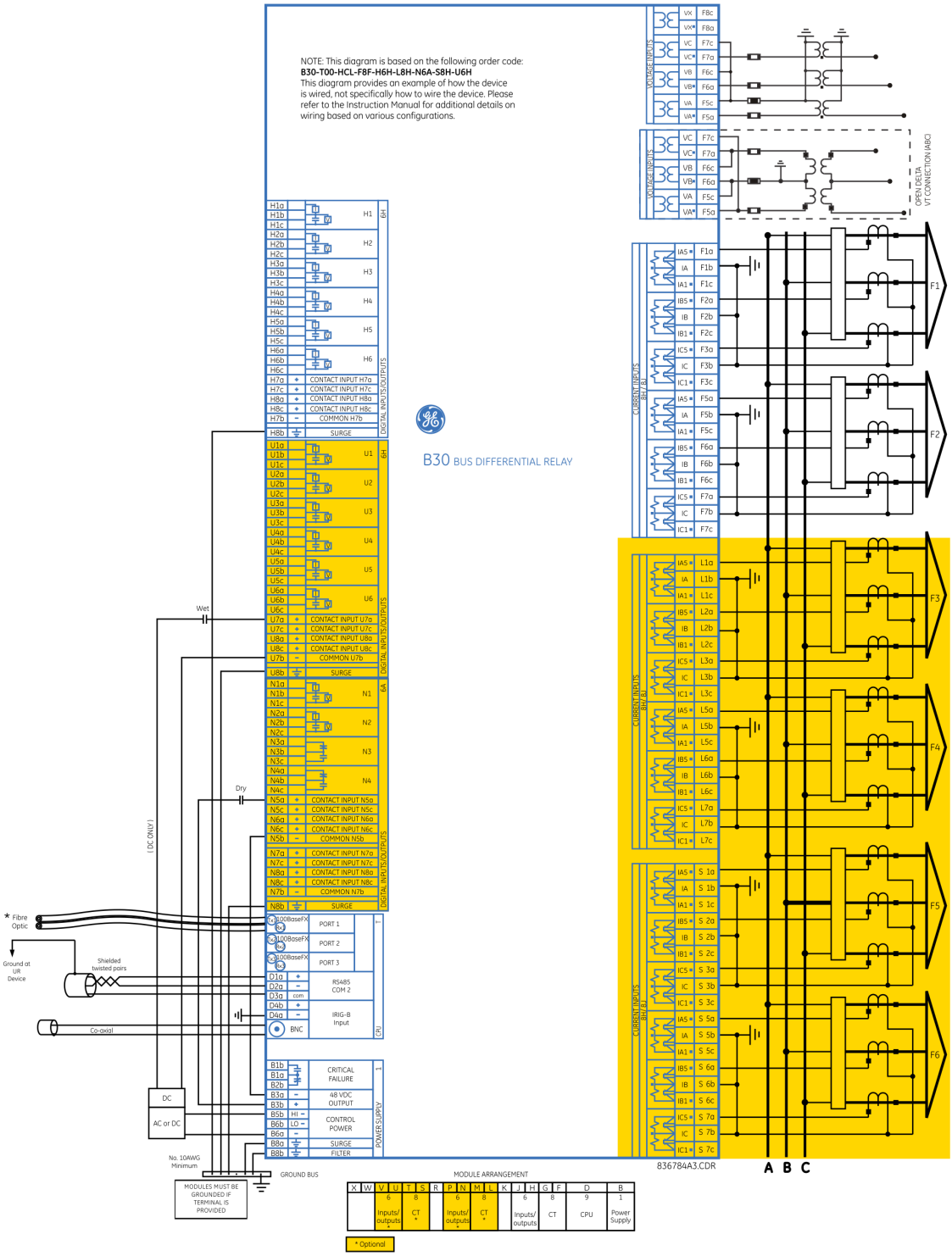

3.3.2 Dielectric strength

Dielectric strength is the maximum electric strength that can be sustained without breakdown. It is measured in volts.

The table shows the dielectric strength of the UR-series module hardware.

Table 3-1: Dielectric strength of UR series modules

Module type	Module function	Terminals		Dielectric strength
		From	To	
1	Power supply	High (+); Low (+); (–)	Chassis	2000 V AC for 1 minute
1	Power supply	48 V DC (+) and (–)	Chassis	2000 V AC for 1 minute
1	Power supply	Relay terminals except terminals 8a and 8b	Chassis	2000 V AC for 1 minute
2	Reserved	N/A	N/A	N/A
3	Reserved	N/A	N/A	N/A
4	Digital contact inputs/ outputs	All	Chassis	2000 V AC for 1 minute
5	Analog inputs/outputs	All except 8b	Chassis	< 50 V DC
6	Digital contact inputs/ outputs	All	Chassis	2000 V AC for 1 minute
7	G.703	All except 2b, 3a, 7b, 8a	Chassis	2000 V AC for 1 minute
	RS422	All except 6a, 7b, 8a	Chassis	< 50 V DC
8	CT/VT	All	Chassis	2000 V AC for 1 minute
9	CPU	All	Chassis	2000 V AC for 1 minute

NOTICE Filter networks and transient protection clamps are used in the hardware to prevent damage caused by high peak voltage transients, radio frequency interference (RFI), and electromagnetic interference (EMI). These protective components can be damaged by application of the ANSI/IEEE C37.90 specified test voltage for a period longer than the specified minute.

3.3.3 Control power

NOTICE Control power supplied to the relay must be connected to the matching power supply range of the relay. If voltage is applied to the wrong terminals, damage can occur.

The B30, like almost all electronic relays, contains electrolytic capacitors. These capacitors are well-known to deteriorate over time if voltage is not applied periodically. Deterioration can be avoided by powering up the relay at least once a year.

The power supply module can be ordered for two possible voltage ranges, and the B30 can be ordered with or without a redundant power supply module option. Each range has a dedicated input connection for proper operation. The ranges are as follows (see the Specifications section of chapter 2 for details):

- Low (LO) range — 24 to 48 V (DC only) nominal
- High (HI) range — 125 to 250 V nominal

The power supply module provides power to the relay and supplies power for dry contact input connections.

The power supply module provides 48 V DC power for dry contact input connections and a critical failure relay (see the Typical Wiring Diagram earlier). The critical failure relay is a form-C device that is energized once control power is applied and the relay has successfully booted up with no critical self-test failures. If on-going self-test diagnostic checks detect a critical failure (see the Self-Test Errors section in chapter 7) or control power is lost, the relay de-energizes.

For high-reliability systems, the B30 has a redundant option in which two B30 power supplies are placed in parallel on the bus. If one of the power supplies becomes faulted, the second power supply assumes the full load of the relay without any interruptions. Each power supply has a green LED on the front of the module to indicate that it is functional. The critical fail relay of the module also indicates a faulted power supply.

An LED on the front of the control power module shows the status of the power supply, as outlined in the table.

Table 3-2: Power supply LED on front panel

LED indication	Power supply
Continuous on	OK
On/off cycling	Failure
Off	Failure or no power

Figure 3-12: Control power connection

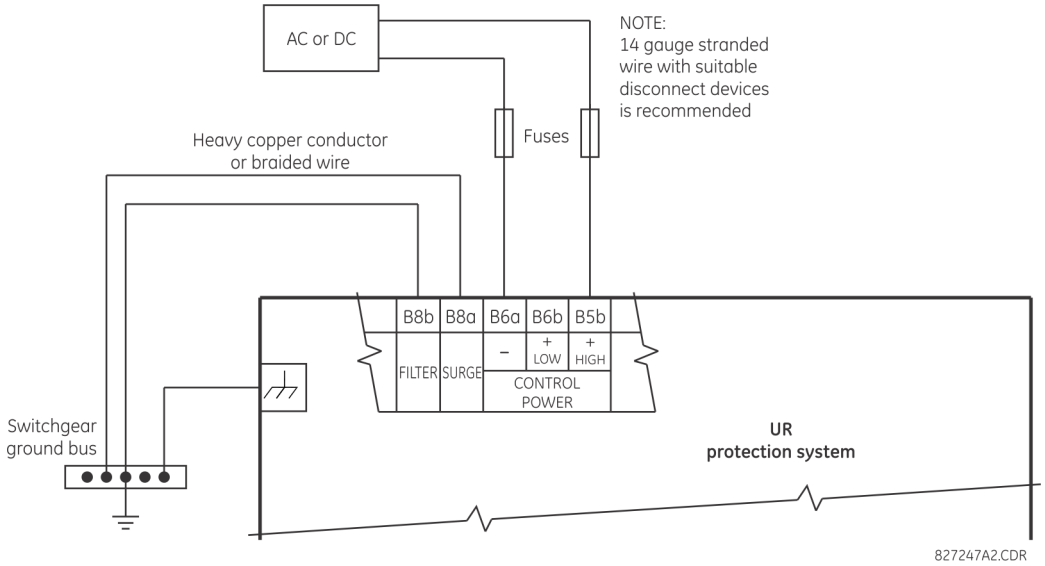

3.3.3.1 Non-volatile data storage

Non-volatile data is temporary data required after a power cycle for relay state, such as latch status before reboot. The relay saves this data in non-volatile storage every two minutes or when a state change occurs.

If a state change occurs just before a power down (less than two minutes) and the relay power is cycled, some temporary data can be saved and the prior state is retained at power up. Otherwise, a two-minute powered on period after a state change ensures that all temporary state changes required after reboot have been saved. A command also is available to initiate saving of data in the compact flash memory using **Commands > Relay Maintenance > Save Volatile Data**.

3.3.4 CT/VT modules

The CT and VT inputs are analog current transformer and voltage transformer signals used to monitor AC power lines. The UR-series relays support 1 A and 5 A CTs.

A CT/VT module can have current or voltage inputs on channels 1 through 4 inclusive, or channels 5 through 8 inclusive. Channels 1 and 5 are intended for connection to phase A, and are labeled as such in the relay. Likewise, channels 2 and 6 are intended for connection to phase B, and channels 3 and 7 are intended for connection to phase C.

Channels 4 and 8 are intended for connection to a single-phase source. For voltage inputs, these channels are labeled as auxiliary voltage (VX). For current inputs, these channels are intended for connection to a CT between system neutral and ground, and are labelled as ground current (IG).

NOTICE Verify that the connection made to the relay terminals for nominal current of 1 A or 5 A matches the secondary rating of the connected CTs. Unmatched CTs can result in equipment damage or inadequate protection.

To connect the module, size 12 American Wire Gauge (AWG) is used commonly; the maximum size is 10 AWG.

CT/VT modules can be ordered with a standard ground current input that is the same as the phase current input. Each AC current input has an isolating transformer and an automatic shorting mechanism that shorts the input when the module is withdrawn from the chassis. There are no internal ground connections on the current inputs. Current transformers with 1 to 50000 A primaries and 1 A or 5 A secondaries can be used.

CT/VT modules with a sensitive ground input are also available. The ground CT input of the sensitive ground modules is 10 times more sensitive than the ground CT input of standard CT/VT modules. However, the phase CT inputs and phase VT inputs are the same as those of regular CT/VT modules.

These modules have enhanced diagnostics that can automatically detect CT/VT hardware failure and take the relay out of service.

CT connections for both ABC and ACB phase rotations are identical, as shown in the Typical Wiring Diagram.

The exact placement of a zero-sequence core balance CT to detect ground fault current is shown as follows. Twisted-pair cabling on the zero-sequence CT is recommended.

Figure 3-13: Zero-sequence core balance CT installation

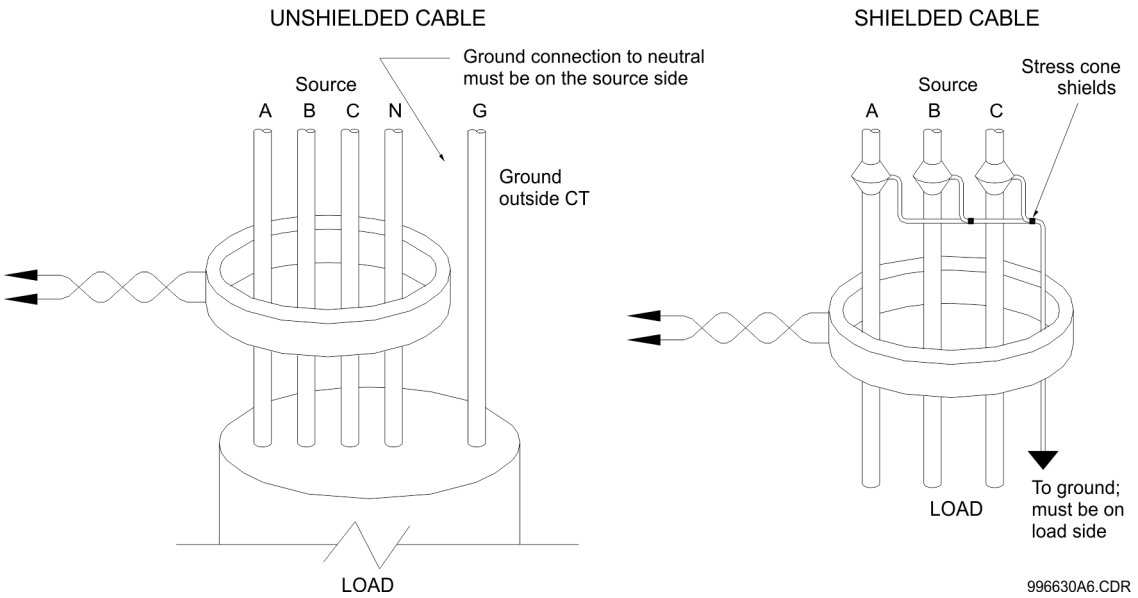

The phase voltage channels are used for most metering and protection purposes. The auxiliary voltage channel is used as input for the synchrocheck and volts-per-hertz features, which are optional features available for some UR models.

NOTE

Substitute the tilde "~" symbol with the slot position of the module in the following figure.

Figure 3-14: CT/VT module wiring

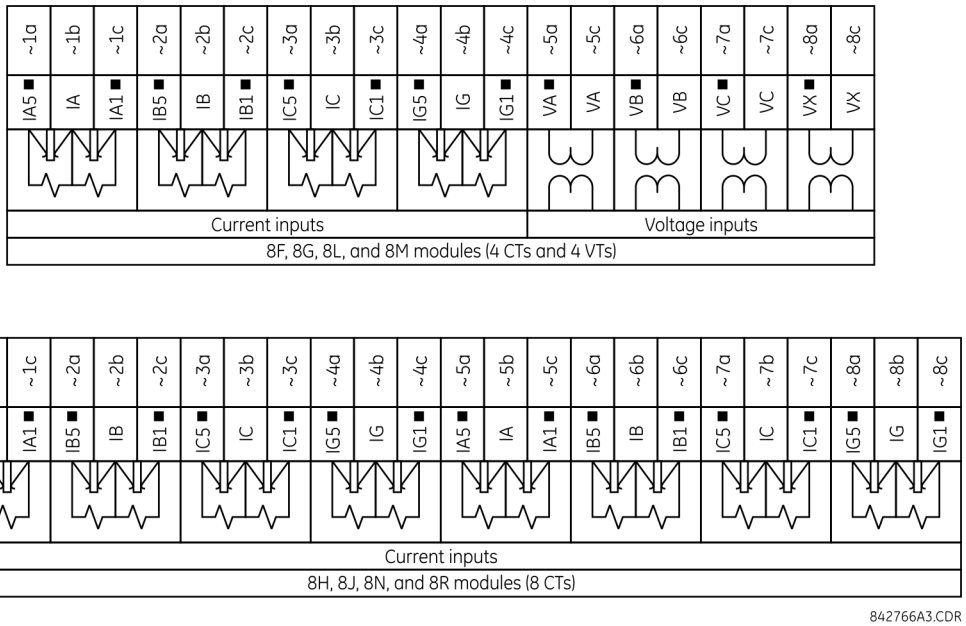

3.3.5 Process bus modules

The B30 can be ordered with a process bus interface module. The module interfaces with the HardFiber Process Bus System, or HardFiber Brick, allowing bidirectional IEC 61850 fiber optic communications with up to eight HardFiber Bricks. The HardFiber system integrates seamlessly with the existing UR-series applications, including protection functions, FlexLogic, metering, and communications.

This process bus system offers the following benefits:

- Reduces labor associated with design, installation, and testing of protection and control applications using the UR by reducing the number of individual copper terminations
- Integrates seamlessly with existing UR applications, since the IEC 61850 process bus interface module replaces the traditional CT/VT modules
- Communicates using open standard IEC 61850 messaging

For details on the HardFiber system, see its Instruction Manual.

3.3.6 Contact inputs and outputs

Every contact input/output module has 24 terminal connections. They are arranged as three terminals per row, with eight rows in total. A given row of three terminals can be used for the outputs of one relay. For example, for form-C relay outputs, the terminals connect to the normally open (NO), normally closed (NC), and common contacts of the relay. For a form-A output, there are options of using current or voltage detection for feature supervision, depending on the module ordered. The terminal configuration for contact inputs is different for the two applications.

The contact inputs are grouped with a common return. The input/output modules have two versions of grouping: four inputs per common return and two inputs per common return. When a contact input/output module is ordered, four inputs per common is used. If the inputs must be isolated per row, then two inputs per common return are selected (4D module).

The tables and diagrams on the following pages illustrate the module types (6A and so on) and contact arrangements that can be ordered for the relay. Since an entire row is used for a single contact output, the name is assigned using the module slot position and row number. However, since there are two contact inputs per row, these names are assigned by module slot position, row number, and column position.

3

Some form-A / solid-state relay outputs include circuits to monitor the DC voltage across the output contact when it is open, and the DC current through the output contact when it is closed. Each of the monitors contains a level detector whose output is set to logic "On = 1" when the current in the circuit is above the threshold setting. The voltage monitor is set to "On = 1" when there is a voltage across open contact (the detector allows a current of about 1 to 2.5 mA), and the current monitor is set to "On = 1" when the current flowing through the closed contact exceeds about 80 to 100 mA. The voltage monitor is intended to check the health of the overall trip circuit, and the current monitor can be used to seal-in the output contact until an external contact has interrupted current flow. If enabled, the current monitoring can be used as a seal-in signal to ensure that the form-A contact does not attempt to break the energized inductive coil circuit and weld the output contacts.

Block diagrams are shown as follows for form-A and solid-state relay outputs with optional voltage monitor, optional current monitor, and with no monitoring. The actual values shown for contact output 1 are the same for all contact outputs. Form-A contact output with or without a current or voltage monitoring option is not polarity sensitive. The polarity shown in the figure is required for solid-state contact output connection.

Figure 3-15: Form-A and solid-state contact outputs with voltage and current monitoring

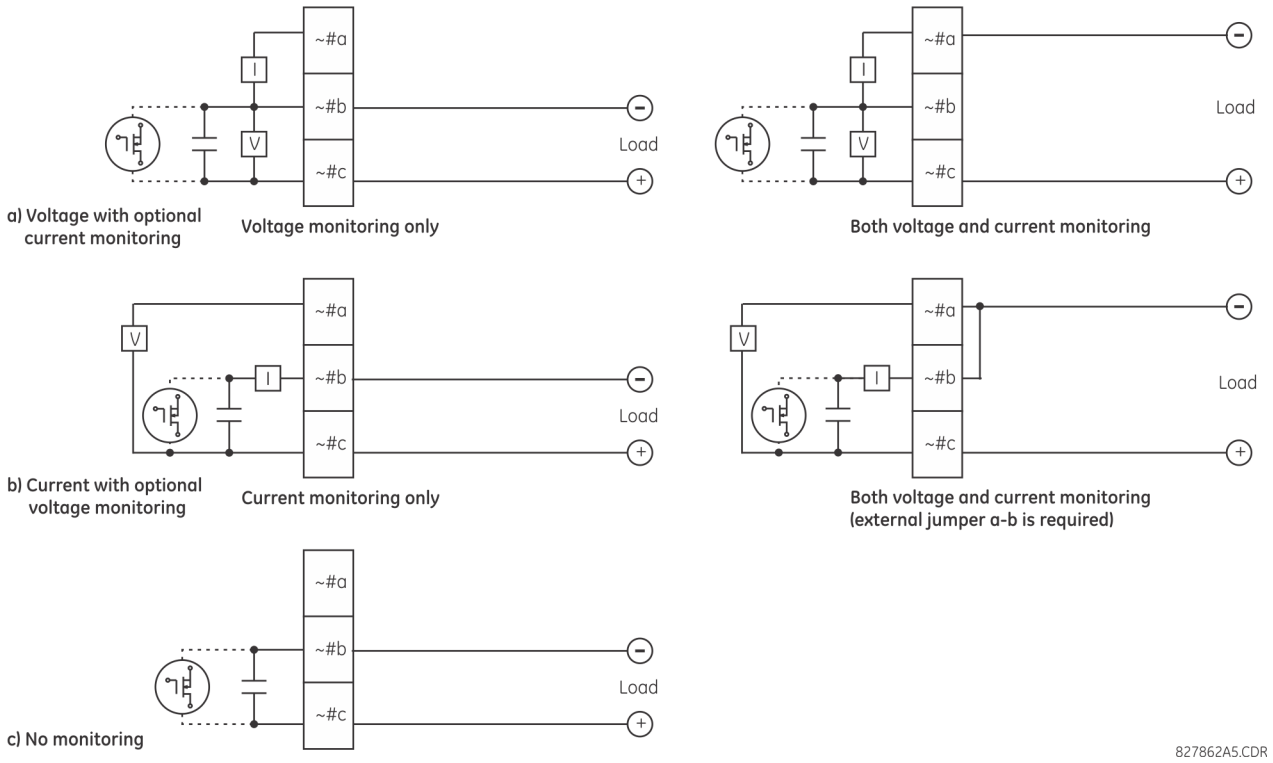

The operation of voltage and current monitors is reflected with the corresponding FlexLogic operands (CONT OP # VON, CONT OP # VOFF, and CONT OP # ION) that can be used in protection, control, and alarm logic. The typical application of the voltage monitor is breaker trip circuit integrity monitoring; a typical application of the current monitor is seal-in of the control command.

See the Digital Elements section of chapter 5 for an example of how form-A and solid-state relay contacts can be applied for breaker trip circuit integrity monitoring.

⚠WARNING **Consider relay contacts unsafe to touch when the unit is energized. Death or serious injury can result from touching live relay contacts.**

NOTE

USE OF FORM-A AND SOLID-STATE RELAY OUTPUTS IN HIGH-IMPEDANCE CIRCUITS

For form-A and solid-state relay output contacts internally equipped with a voltage measuring circuit across the contact, the circuit has an impedance that can cause a problem when used in conjunction with external high-input impedance monitoring equipment such as modern relay test set trigger circuits. These monitoring circuits can continue to read the form-A contact as being closed after it has closed and subsequently opened, when measured as an impedance.

The solution is to use the voltage measuring trigger input of the relay test set, and connect the form-A contact through a voltage-dropping resistor to a DC voltage source. If the 48 V DC output of the power supply is used as a source, a 500 Ω, 10 W resistor is appropriate. In this configuration, the voltage across either the form-A contact or the resistor can be used to monitor the state of the output.

NOTE

Where a tilde "~" symbol appears, substitute the slot position of the module. Where a number sign "#" appears, substitute the contact number.

NOTICE

When current monitoring is used to seal-in the form-A and solid-state relay contact outputs, give the FlexLogic operand driving the contact output a reset delay of 10 ms to prevent damage of the output contact (in situations when the element initiating the contact output is bouncing, at values in the region of the pickup value).

Table 3-3: Contact input and output module assignments

~6A module	
Terminal assignment	**Output or input**
~1	Form-A
~2	Form-A
~3	Form-C
~4	Form-C
~5a, ~5c	2 Inputs
~6a, ~6c	2 Inputs
~7a, ~7c	2 Inputs
~8a, ~8c	2 Inputs

~6B module	
Terminal assignment	**Output or input**
~1	Form-A
~2	Form-A
~3	Form-C
~4	Form-C
~5	Form-C
~6	Form-C
~7a, ~7c	2 Inputs
~8a, ~8c	2 Inputs

~6C module	
Terminal assignment	**Output**
~1	Form-C
~2	Form-C
~3	Form-C
~4	Form-C
~5	Form-C
~6	Form-C
~7	Form-C
~8	Form-C

~6D module	
Terminal assignment	**Output**
~1a, ~1c	2 Inputs
~2a, ~2c	2 Inputs
~3a, ~3c	2 Inputs
~4a, ~4c	2 Inputs
~5a, ~5c	2 Inputs
~6a, ~6c	2 Inputs
~7a, ~7c	2 Inputs
~8a, ~8c	2 Inputs

~6E module	
Terminal assignment	**Output or input**
~1	Form-C
~2	Form-C
~3	Form-C
~4	Form-C
~5a, ~5c	2 Inputs
~6a, ~6c	2 Inputs
~7a, ~7c	2 Inputs
~8a, ~8c	2 Inputs

~6F module	
Terminal assignment	**Output**
~1	Fast Form-C
~2	Fast Form-C
~3	Fast Form-C
~4	Fast Form-C
~5	Fast Form-C
~6	Fast Form-C
~7	Fast Form-C
~8	Fast Form-C

~6G module	
Terminal assignment	**Output or input**
~1	Form-A
~2	Form-A
~3	Form-A
~4	Form-A
~5a, ~5c	2 Inputs
~6a, ~6c	2 Inputs
~7a, ~7c	2 Inputs
~8a, ~8c	2 Inputs

~6H module	
Terminal assignment	**Output or input**
~1	Form-A
~2	Form-A
~3	Form-A
~4	Form-A
~5	Form-A
~6	Form-A
~7a, ~7c	2 Inputs
~8a, ~8c	2 Inputs

3

~6K module	
Terminal assignment	**Output**
~1	Form-C
~2	Form-C
~3	Form-C
~4	Form-C
~5	Fast Form-C
~6	Fast Form-C
~7	Fast Form-C
~8	Fast Form-C

~6L module	
Terminal assignment	**Output or input**
~1	Form-A
~2	Form-A
~3	Form-C
~4	Form-C
~5a, ~5c	2 Inputs
~6a, ~6c	2 Inputs
~7a, ~7c	2 Inputs
~8a, ~8c	2 Inputs

~6M module	
Terminal assignment	**Output or input**
~1	Form-A
~2	Form-A
~3	Form-C
~4	Form-C
~5	Form-C
~6	Form-C
~7a, ~7c	2 Inputs
~8a, ~8c	2 Inputs

~6N module	
Terminal assignment	**Output or input**
~1	Form-A
~2	Form-A
~3	Form-A
~4	Form-A
~5a, ~5c	2 Inputs
~6a, ~6c	2 Inputs
~7a, ~7c	2 Inputs
~8a, ~8c	2 Inputs

~6P module	
Terminal assignment	**Output or input**
~1	Form-A
~2	Form-A
~3	Form-A
~4	Form-A
~5	Form-A
~6	Form-A
~7a, ~7c	2 Inputs
~8a, ~8c	2 Inputs

~6R module	
Terminal assignment	**Output or input**
~1	Form-A
~2	Form-A
~3	Form-C
~4	Form-C
~5a, ~5c	2 Inputs
~6a, ~6c	2 Inputs
~7a, ~7c	2 Inputs
~8a, ~8c	2 Inputs

~6S module	
Terminal assignment	**Output or input**
~1	Form-A
~2	Form-A
~3	Form-C
~4	Form-C
~5	Form-C
~6	Form-C
~7a, ~7c	2 Inputs
~8a, ~8c	2 Inputs

~6T module	
Terminal assignment	**Output or input**
~1	Form-A
~2	Form-A
~3	Form-A
~4	Form-A
~5a, ~5c	2 Inputs
~6a, ~6c	2 Inputs
~7a, ~7c	2 Inputs
~8a, ~8c	2 Inputs

~6U module	
Terminal assignment	**Output or input**
~1	Form-A
~2	Form-A
~3	Form-A
~4	Form-A
~5	Form-A
~6	Form-A
~7a, ~7c	2 Inputs
~8a, ~8c	2 Inputs

~6V module	
Terminal assignment	**Output or input**
~1	Form-A
~2	Form-A
~3	Form-C
~4	2 Outputs
~5a, ~5c	2 Inputs
~6a, ~6c	2 Inputs
~7a, ~7c	2 Inputs
~8a, ~8c	2 Inputs

~67 module	
Terminal assignment	**Output**
~1	Form-A
~2	Form-A
~3	Form-A
~4	Form-A
~5	Form-A
~6	Form-A
~7	Form-A
~8	Form-A

~4A module	
Terminal assignment	**Output**
~1	Not Used
~2	Solid-State
~3	Not Used
~4	Solid-State
~5	Not Used
~6	Solid-State
~7	Not Used
~8	Solid-State

~4B module	
Terminal assignment	**Output**
~1	Not Used
~2	Solid-State
~3	Not Used
~4	Solid-State
~5	Not Used
~6	Solid-State

~4C module	
Terminal assignment	**Output**
~1	Not Used
~2	Solid-State
~3	Not Used
~4	Solid-State
~5	Not Used
~6	Solid-State

~4D module	
Terminal assignment	**Output**
~1a, ~1c	2 Inputs
~2a, ~2c	2 Inputs
~3a, ~3c	2 Inputs
~4a, ~4c	2 Inputs
~5a, ~5c	2 Inputs
~6a, ~6c	2 Inputs

~4L module	
Terminal assignment	**Output**
~1	2 Outputs
~2	2 Outputs
~3	2 Outputs
~4	2 Outputs
~5	2 Outputs
~6	2 Outputs

~4B module	
Terminal assignment	**Output**
~7	Not Used
~8	Solid-State

~4C module	
Terminal assignment	**Output**
~7	Not Used
~8	Solid-State

~4D module	
Terminal assignment	**Output**
~7a, ~7c	2 Inputs
~8a, ~8c	2 Inputs

~4L module	
Terminal assignment	**Output**
~7	2 Outputs
~8	Not Used

3

Figure 3-16: Contact input and output module wiring (Sheet 1 of 2)

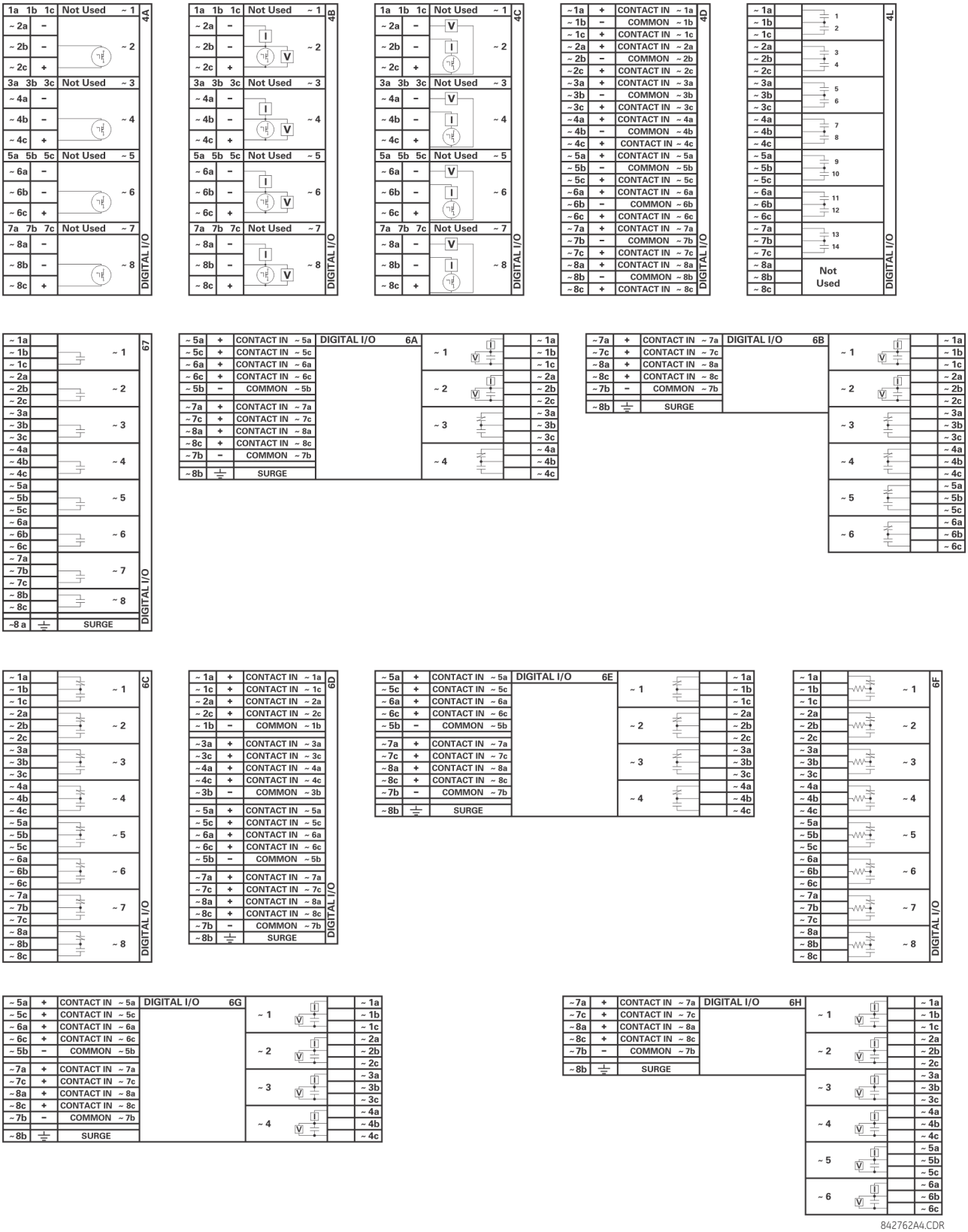

Figure 3-17: Contact input and output module wiring (Sheet 2 of 2)

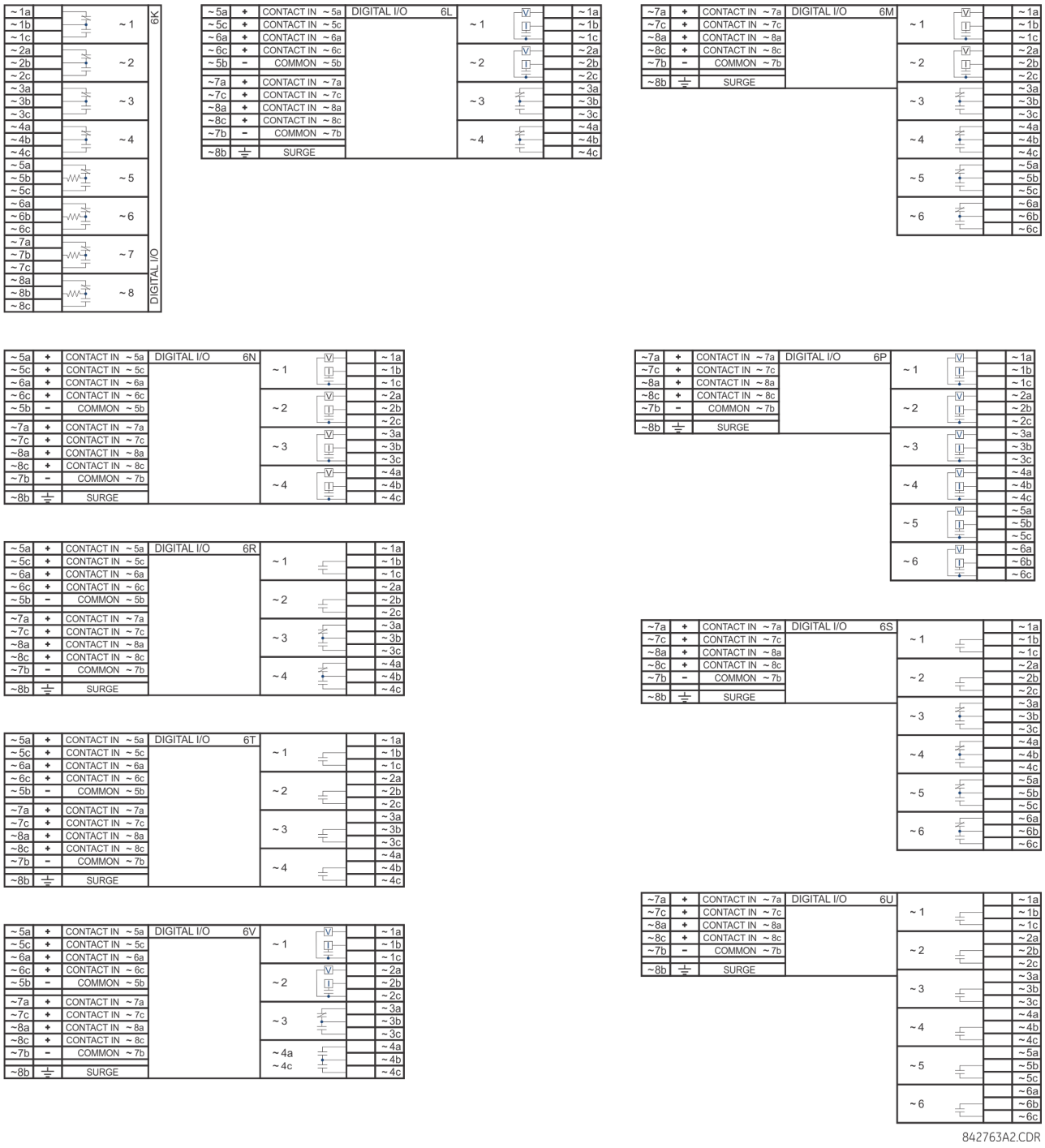

NOTICE For proper functionality, observe the polarity shown in the figures for all contact input and output connections.

3.3.6.1 Contact inputs

A dry contact has one side connected to terminal B3b. This is the positive 48 V DC voltage rail supplied by the power supply module. The other side of the dry contact is connected to the required contact input terminal. Each contact input group has its own common (negative) terminal that must be connected to the DC negative terminal (B3a) of the power supply module. When a dry contact closes, a current of 1 to 3 mA flows through the associated circuit.

A wet contact has one side connected to the positive terminal of an external DC power supply. The other side of this contact is connected to the required contact input terminal. If a wet contact is used, then the negative side of the external source must be connected to the relay common (negative) terminal of each contact group. The maximum external source voltage for this arrangement is 300 V DC.

The voltage threshold at which each group of four contact inputs detects a closed contact input is programmable as 17 V DC for 24 V sources, 33 V DC for 48 V sources, 84 V DC for 110 to 125 V sources, and 166 V DC for 250 V sources.

Figure 3-18: Dry and wet contact input connections

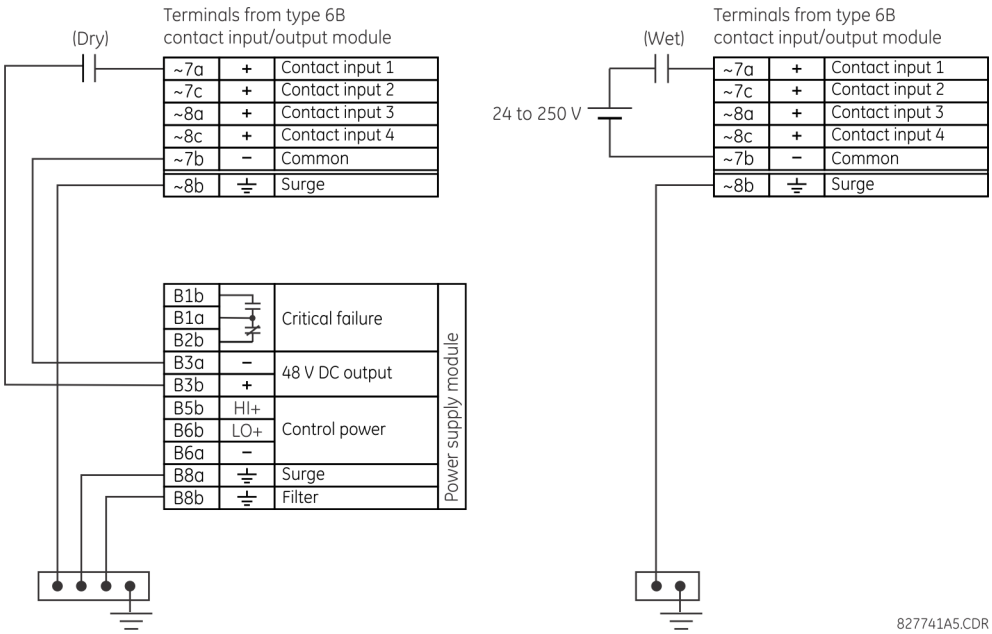

NOTE

Where a tilde "~" symbol appears, substitute the slot position of the module.

There is no provision in the relay to detect a DC ground fault on 48 V DC control power external output. We recommend using an external DC supply.

3.3.6.2 General application considerations

Contacts outputs of protective relays, auxiliary contacts from breakers, disconnectors and other devices, are generally connected to contacts inputs of protective relays. In some situations, the contact outputs of some protective relays can have high impedance connected across it. When such a contact output is connected across a B30 contact input, it can spuriously operate the B30 input even when the output is open, if there is a substantial distributed capacitance (represented by C1) present in the wiring between the output and the B30 input and the debounce time setting in the B30 relay is low enough. This false assertion of the contact input, when there is inadvertent ground present at the DC positive terminal, can be prevented by inserting a resistor across the B30 input.

The following figure shows a typical DC circuit, with battery ground detection, of contact input. The contact output has parallel impedance across it (represented by R1).

Figure 3-19: Typical contact input DC circuit

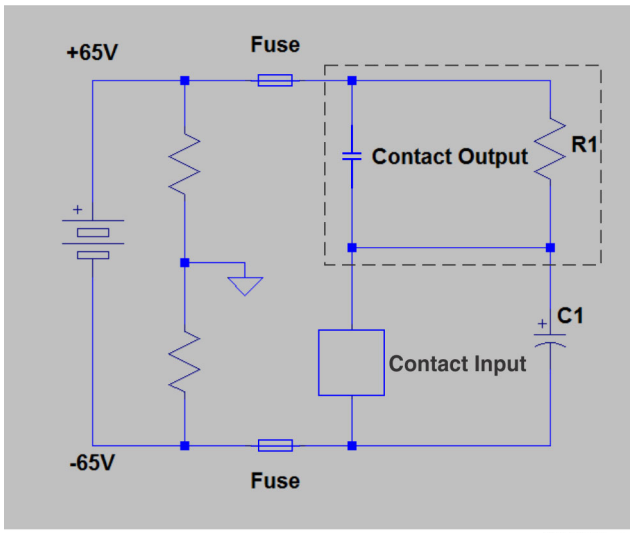

The presence of the impedance path (R1) across the contact output allows the stray (distributed) capacitance C1 to charge as shown, thus developing a voltage across the contact input enough to momentarily operate the input while the capacitance discharges in the presence of DC ground on the positive terminal of the battery.

The duration of the discharge depends on the value of the distributed capacitance, the initial voltage of the distributed capacitance, and the input impedance of the contact input. If the duration is greater than the debounce time setting, then the contact input operates.

The application example that follows describes how to mitigate this problem by connecting a resistor across the contact input, as shown in the next figure, or by adjusting the debounce time setting to a value greater than the discharge time to prevent spurious operation of the contact input only if the voltage (with output open) across the contact input due to trickle current is less than the threshold voltage. This operation of contact inputs also can be prevented by using the Auto-Burnish contact inputs or contact inputs with active impedance.

Figure 3-20: Contact input connected to a contact output with resistor (R2) across the input

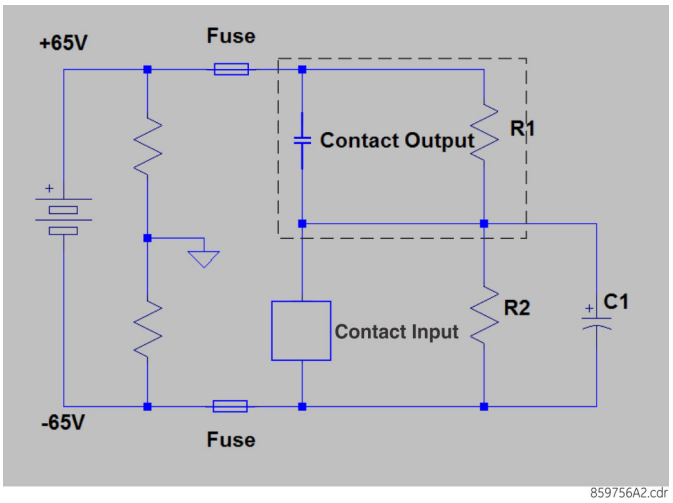

Application example

This example is for illustrative purposes only and the calculations present the worst-case scenario. In practice, the value of debounce time can be lower.

Contact input ON state impedance used in the calculation of the discharge period is based on the following table.

Table 3-4: Discharge period

Battery voltage (V)	Input impedance (kΩ)
130	50
250	97

Debounce time setting = 2 ms

Assume a stray capacitance of 0.1 µF.

Assume an initial voltage across the stray capacitance "Vinitial" = 19 V (Vthreshold - 65 V), where Vthreshold = 84 V. The initial voltage Vinitial depends on values of impedance of R1 and contact inputs when the contact input is OFF (non-activated state).

Therefore, discharge time constant (τ) =50 kΩ *0.1 µF = 5 ms.

Discharge period t is calculated from the following equation:

$$Vthreshold = (Vbatt - VInitial) * e^{(-t/\tau)}$$

$$84 = -149 * e^{(t/0.005)} \qquad \textbf{Eq. 3-1}$$

$$T = -0.005 * \ln(84/149) = 0.0029 \text{ s}$$

Therefore, in this example the contact inputs operate.

To prevent this operation, the debounce time must be increased to 4 ms (set debounce time as per the following table) or insert a resistor less than or equal to "R" as calculated later.

Table 3-5: Typical debounce time setting

Stray capacitance (µF)	Battery voltage (V)	Debounce time (ms)
0.05	130	2
0.1	130	4
0.2	130	6
0.05	250	3
0.1	250	6
0.2	250	11

The value of this resistor "R" is calculated as follows:

1. Determine the minimum voltage (V threshold) required to turn on the input. This is determined by direct measurement or referenced in the input specifications.
2. Calculate the resistance necessary to limit the voltage to 1/3 V threshold (when the contact is OFF, the non-activated state) as follows:

   $$R = (Vthreshold / 3) / (2 \text{ mA}) \qquad \textbf{Eq. 3-2}$$

   The 2 mA current is used in case the contact input is connected across the GE Form A contact output with voltage monitoring. Otherwise use the amperage of the active circuit connected to the contact input when its contact output is open and the voltage across the contact input is third trigger threshold to calculate the resistor value.
3. When the contact is ON (operate state), the battery voltage appears across the resistor. The wattage rating of the resistor is then:

   $$PR = 1.3 * (Vbatt)^2 / R \text{ Watts} \qquad \textbf{Eq. 3-3}$$
4. Applying the following equation to our example:

   $$R = 84 \text{ V} / 3*(1 / 2 \text{ mA}) = 14 \text{ k}\Omega$$

   $$PR = 1.57 \text{ Watts} \qquad \textbf{Eq. 3-4}$$
5. Calculating the voltage across the contact input with the Burden Resistor, Voltage across the contact Input:

   $$Vresistor = 2 \text{ mA} * 14 \text{ Kohm} = 28 \text{ V}$$

   $$Vresistor < \text{contact input threshold (84 V)} \qquad \textbf{Eq. 3-5}$$

In conclusion, in this example, the contact input does NOT operate falsely with the Burden Resistor across its input AND when a battery ground is present.

3.3.6.3 Use of contact inputs with auto-burnishing

The contact inputs sense a change of the state of the external device contact based on the measured current. When external devices are located in a harsh industrial environment (either outdoor or indoor), their contacts can be exposed to various types of contamination. Normally, there is a thin film of insulating sulfidation, oxidation, or contaminates on the surface of the contacts, sometimes making it difficult or impossible to detect a change of the state. This film must be removed to establish circuit continuity — an impulse of higher than normal current can accomplish this.

The contact inputs with auto-burnish create a high current impulse when the threshold is reached to burn off this oxidation layer as a maintenance to the contacts. Afterwards the contact input current is reduced to a steady-state current. The impulse has a five-second delay after a contact input changes state.

Figure 3-21: Current through contact inputs with auto-burnishing

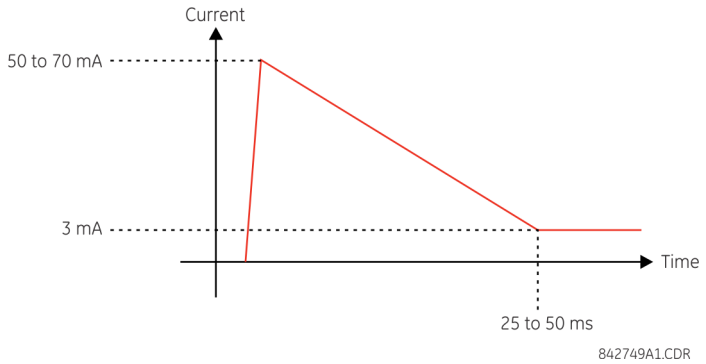

Regular contact inputs limit current to less than 3 mA to reduce station battery burden. In contrast, contact inputs with auto-burnishing allow currents up to 50 to 70 mA at the first instance when the change of state was sensed. Then, within 25 to 50 ms, this current is slowly reduced to 3 mA as indicated. The 50 to 70 mA peak current burns any film on the contacts, allowing for proper sensing of state changes. If the external device contact is bouncing, the auto-burnishing starts when external device contact bouncing is over.

Another important difference between the auto-burnishing input module and the regular input modules is that only two contact inputs have common ground, as opposed to four contact inputs sharing one common ground (see the Contact Input and Output Module Wiring diagrams). This is beneficial when connecting contact inputs to separate voltage sources. Consequently, the threshold voltage setting is also defined per group of two contact inputs.

The auto-burnish feature can be disabled or enabled using the DIP switches found on each daughter card. There is a DIP switch for each contact, for a total of 16 inputs.

Figure 3-22: Auto-burnish DIP switches

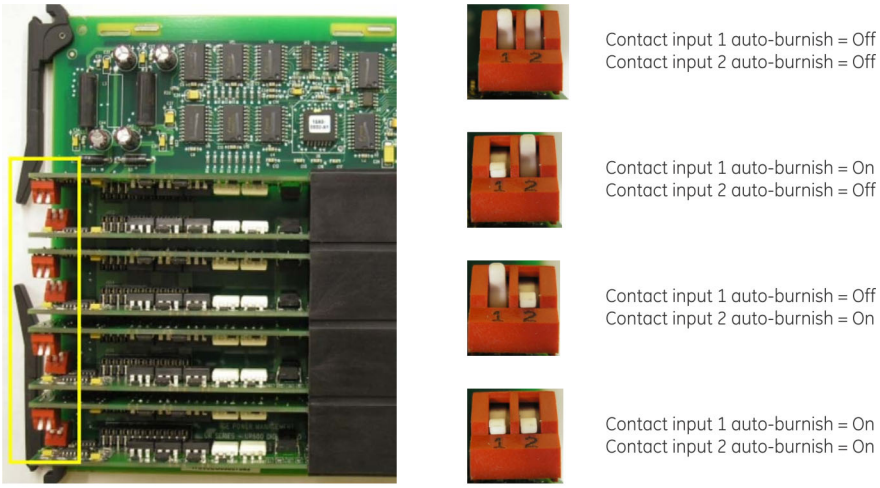

842751A1.CDR

The auto-burnish circuitry has an internal fuse for safety purposes. During regular maintenance, check the auto-burnish functionality using an oscilloscope.

3.3.6.4 Use of contact inputs with active impedance

Contact inputs susceptible to parasitic capacitance caused by long cable runs affected by switching surges from external circuits can result in inadvertent activation of contact inputs with the external contact open. In this case, GE recommends using the contact I/O module with active impedance circuit.

Active impedance contact input can tolerate external cable capacitance of up to 0.2 μF, without entering the ON state for more than 2 ms. The contact input debounce time can still be set above 2 ms for added security to prevent contact input activations cause by external transient ON states.

An active impedance contact input is normally in Low impedance mode during OFF contact state (non-activated condition). During Low impedance state contact input impedance is maintained at 10 K Ohms impedance to allow fast discharge of the stray capacitance of the long cables.

When the contact input voltage exceeds the set threshold, active impedance maintains 10 K Ohms impedance value. If voltage starts rapidly decreasing, this indicates that stray capacitance is being discharged through the contact input. If, however, voltage stabilizes above the set threshold, the input impedance is switched to High impedance mode of 100 K Ohms. This value reduces the input current to <3 mA, and contact input switched to the ON state (operated state).

The figure shows the active impedance contact input V-I characteristic. Different thresholds with their corresponding characteristics are shown by color. The contact input is in the ON (operated) state if the input voltage is to the right of the colored threshold band (+/-10% tolerance), and the contact input is in the OFF (non-activated) state when input voltage is to the left of the band. A contact input is in LOW state during non-operated system condition, and actively switches to HIGH state upon detection of input voltage above the settable threshold.

Figure 3-23: Active impedance contact input V-I characteristic

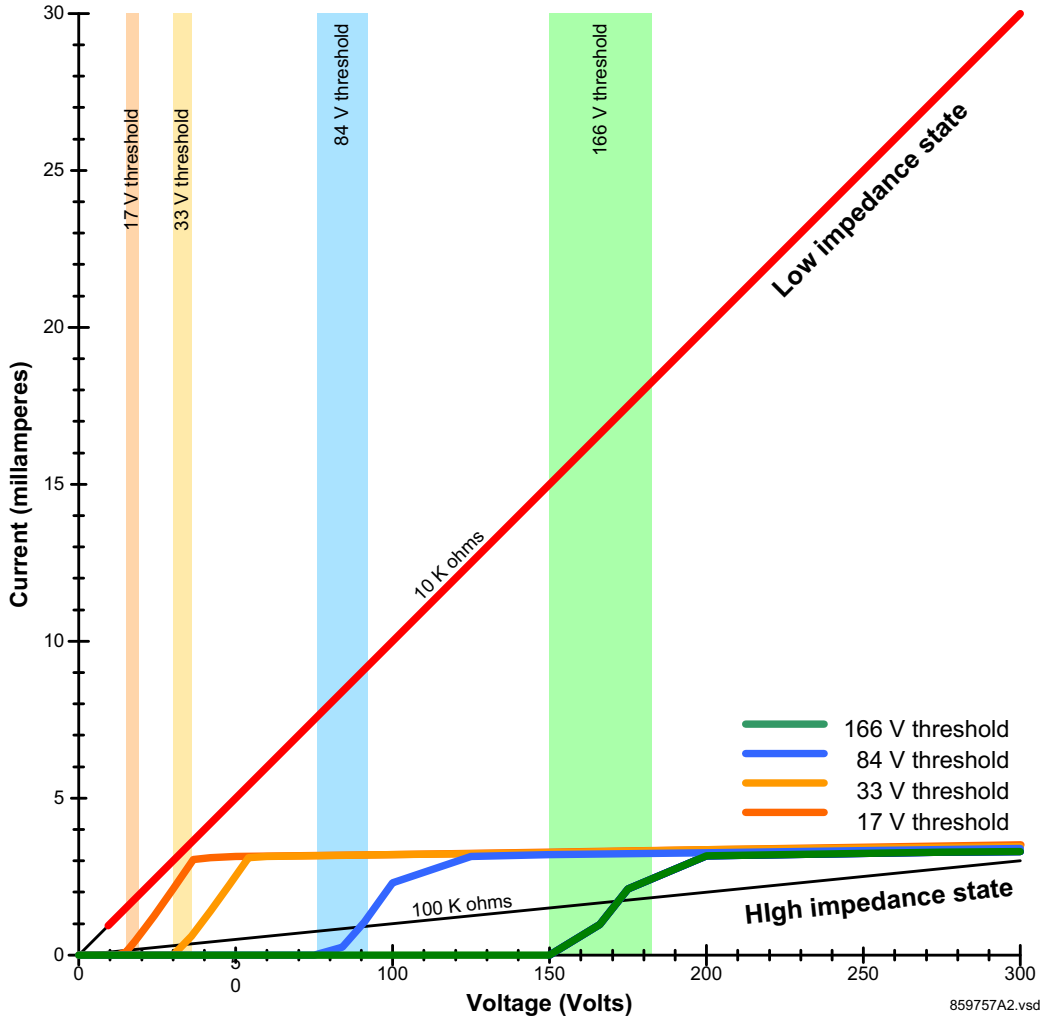

3.3.7 Transducer inputs and outputs

Transducer input modules can receive input signals from external DCmA output transducers (DCmA In) or resistance temperature detectors (RTDs). Hardware and software are provided to receive signals from these external transducers and convert these signals into a digital format for use as required.

Transducer output modules provide DC current outputs in several standard DCmA ranges. Software is provided to configure virtually any analog quantity used in the relay to drive the analog outputs.

Every transducer input/output module has a total of 24 terminal connections. These connections are arranged as three terminals per row with a total of eight rows. A given row can be used for either inputs or outputs, with terminals in column "a" having positive polarity and terminals in column "c" having negative polarity. Since an entire row is used for a single input/output channel, the name of the channel is assigned using the module slot position and row number.

Each module also requires that a connection from an external ground bus be made to terminal 8b. The current outputs require a twisted-pair shielded cable, where the shield is grounded at one end only. The following figure illustrates the transducer module types (5A, 5C, 5D, 5E, and 5F) and channel arrangements that can be ordered for the relay.

NOTE

Where a tilde "~" symbol appears, substitute the slot position of the module.

3

Figure 3-24: Transducer input/output module wiring

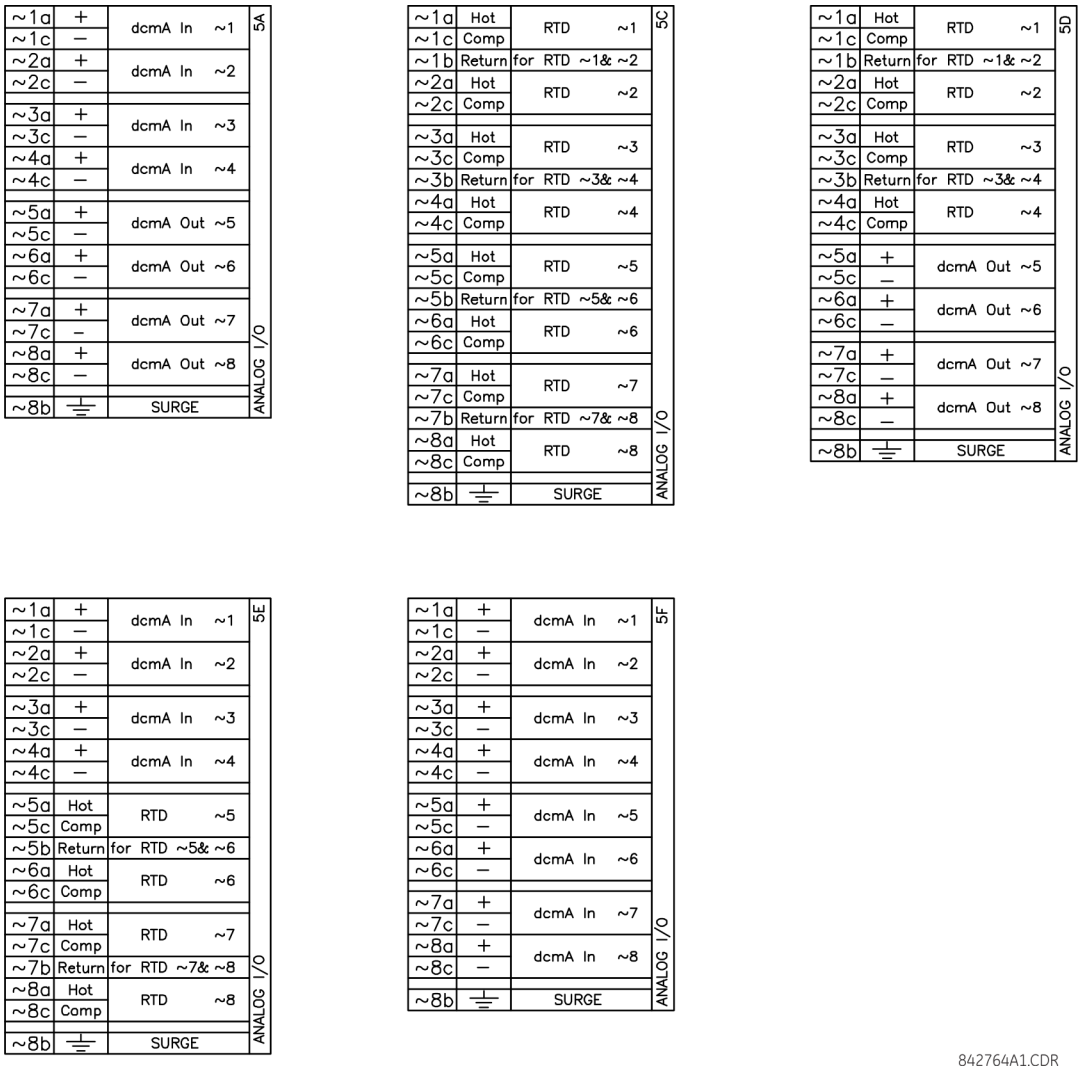

The following figure show how to connect RTDs.

Figure 3-25: RTD connections

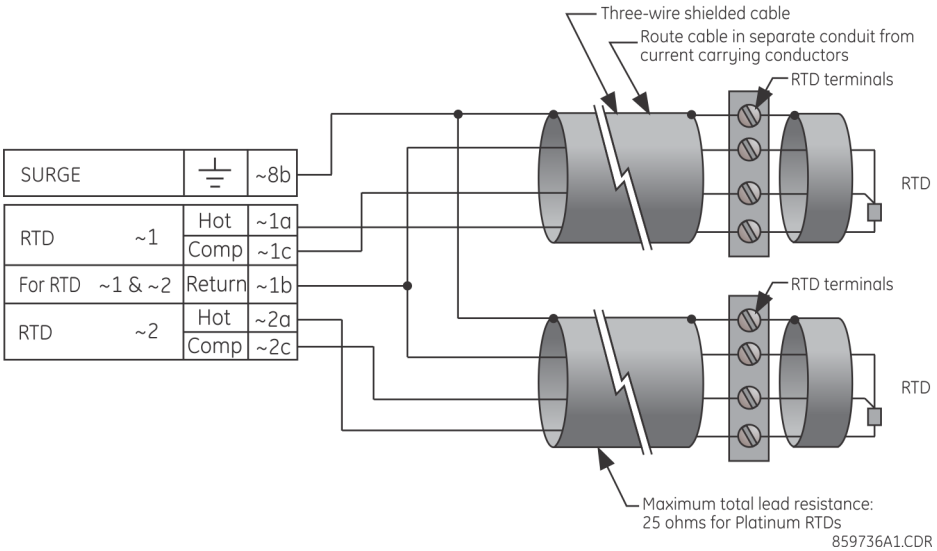

3.3.8 RS232 faceplate port

A nine-pin RS232C serial port is located on the faceplate for programming with a computer. All that is required to use this interface is a computer running the EnerVista UR Setup software provided with the relay. Cabling for the RS232 port is shown in the following figure for both 9-pin and 25-pin connectors.

The baud rate for this port can be set, with a default of 115200 bps.

Figure 3-26: RS232 faceplate port connection

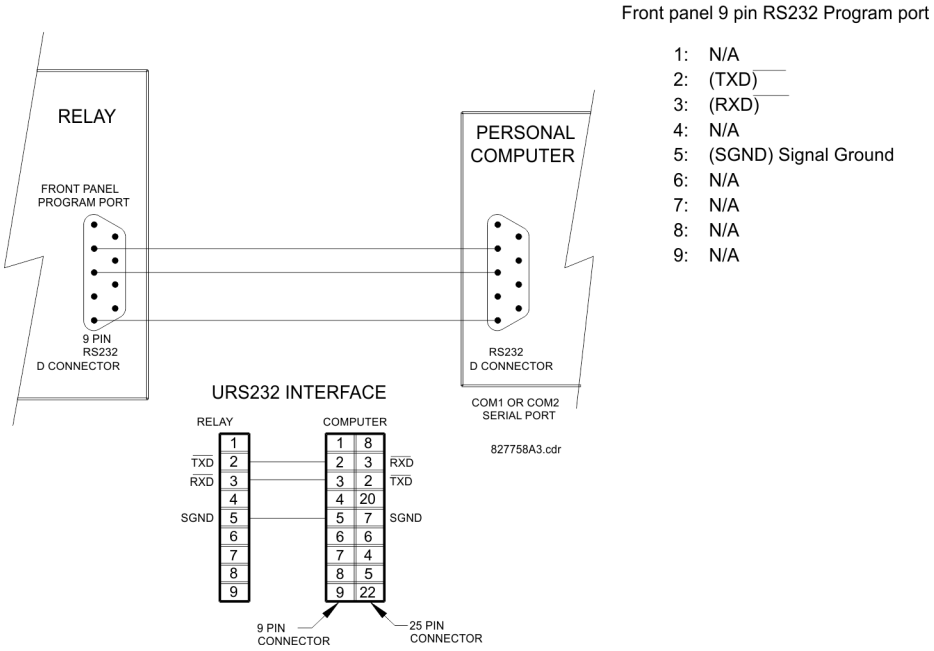

3

3.3.9 CPU communication ports

3.3.9.1 Overview

In addition to the faceplate RS232 port, there is a rear RS485 communication port.

The CPU modules do not require a surge ground connection.

Figure 3-27: CPU module communications wiring

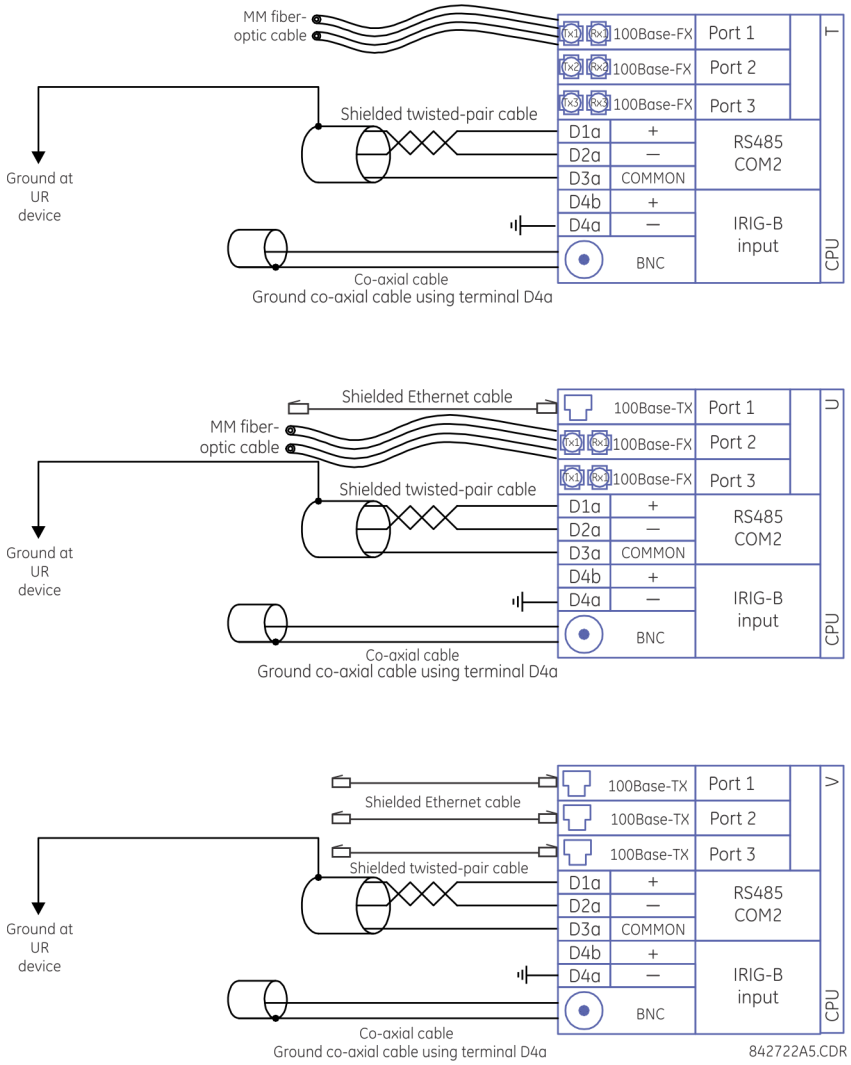

3.3.9.2 RS485 port

RS485 data transmission and reception are accomplished over a single twisted-pair wire with transmit and receive data alternating over the same two wires. Through the use of the port, continuous monitoring and control from a remote computer, SCADA system, or Power Line Carrier (PLC) is possible.

To minimize errors from noise, the use of shielded twisted-pair wire is recommended. Correct polarity must be observed. For instance, the relays must be connected with all RS485 "+" terminals connected together, and all RS485 "–" terminals connected together. Though data is transmitted over a two-wire twisted pair, all RS485 devices require a shared reference, or common voltage. This common voltage is implied to be a power supply common. Some systems allow the shield (drain wire) to be used as common wire and to connect directly to the B30 COM terminal (#3); others function correctly only if the common wire is connected to the B30 COM terminal, but insulated from the shield.

To avoid loop currents, ground the shield at only one point. If other system considerations require the shield to be grounded at more than one point, install resistors (typically 100 ohms) between the shield and ground at each grounding point. Each relay needs to be daisy-chained to the next one in the link. A maximum of 32 relays can be connected in this manner without exceeding driver capability. For larger systems, additional serial channels must be added. It is also possible to use commercially available repeaters to have more than 32 relays on a single channel. Avoid star or stub connections entirely.

Lightning strikes and ground surge currents can cause large momentary voltage differences between remote ends of the communication link. For this reason, surge protection devices are provided internally at both communication ports. An isolated power supply with an optocoupled data interface also acts to reduce noise coupling. To ensure maximum reliability, ensure that all equipment has similar transient protection devices installed.

Terminate both ends of the RS485 circuit with an impedance as shown in the figure.

Figure 3-28: RS485 serial connection

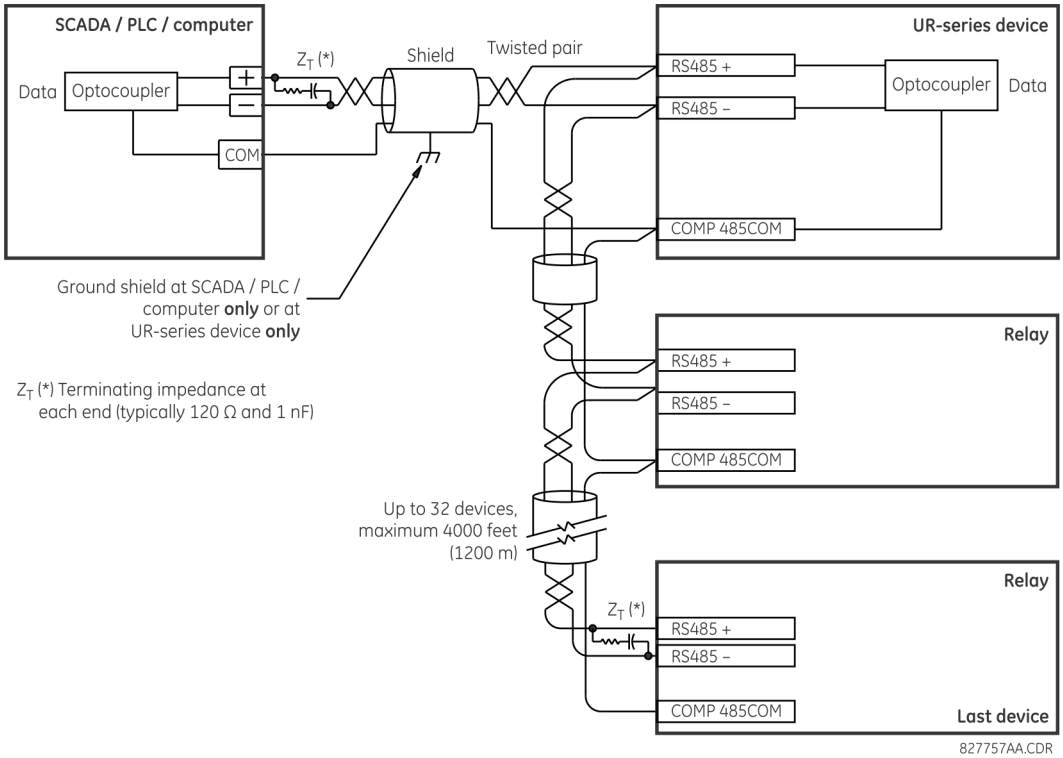

3.3.9.3 100Base-FX fiber optic ports

The fiber optic communication ports allow for fast and efficient communications between relays at 100 Mbps. Optical fiber can be connected to the relay supporting a wavelength of 1310 nm in multimode.

Ensure that the dust covers are installed when the fiber is not in use. Dirty or scratched connectors can lead to high losses on a fiber link.

3.3.10 IRIG-B

IRIG-B is a standard time code format that allows stamping of events to be synchronized among connected devices. The IRIG-B code allows time accuracies of up to 100 ns. Using the IRIG-B input, the B30 operates an internal oscillator with 1 µs resolution and accuracy. The IRIG time code formats are serial, pulse width-modulated codes that can be either DC level shifted or amplitude modulated (AM). The GE MultiSync 100 1588 GPS Clock as well as third-party equipment are available for generating the IRIG-B signal; this equipment can use a global positioning system (GPS) satellite system to obtain the time reference so that devices at different geographic locations can be synchronized.

3

Figure 3-29: Options for the IRIG-B connection

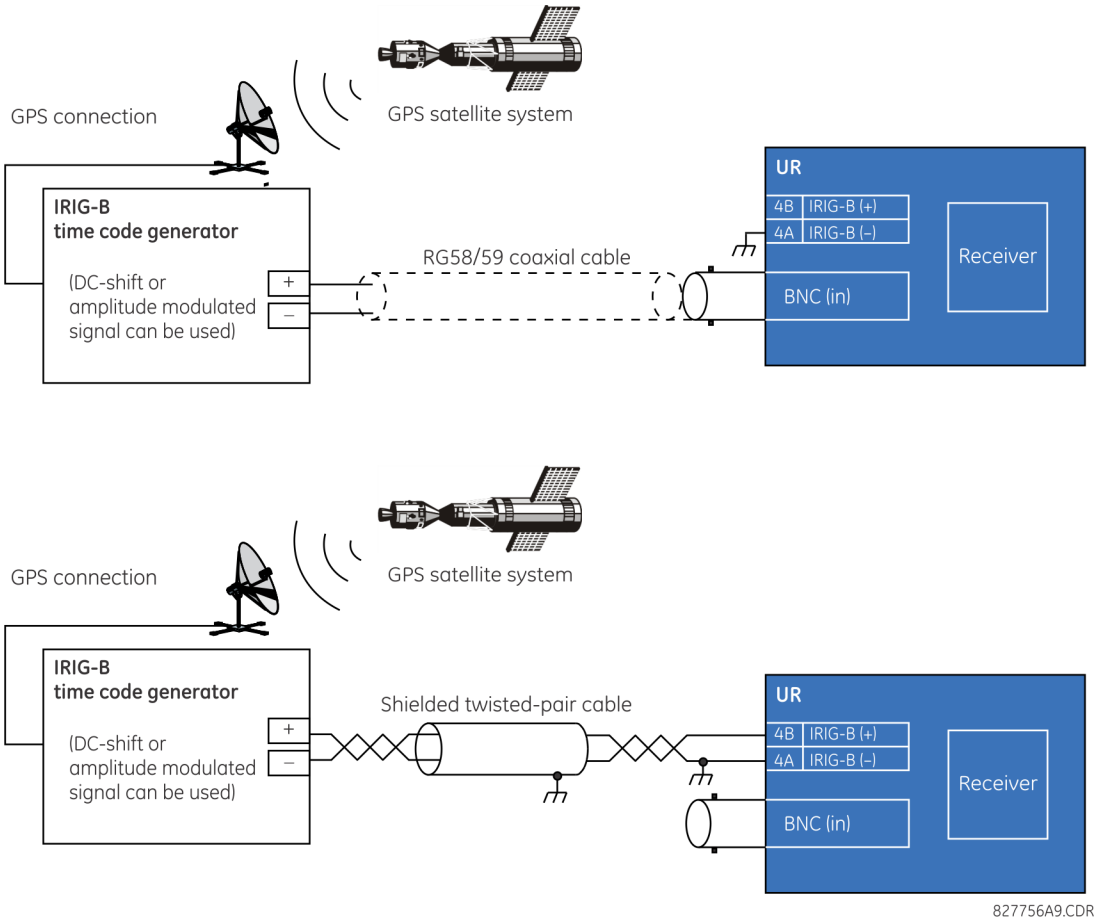

NOTE

Using an amplitude-modulated receiver causes errors up to 1 ms in event time stamping.

3.4 Direct input and output communications

3.4.1 Description

The direct inputs and outputs feature makes use of the type 7 series of communications modules and allows direct messaging between UR devices. The communications modules are outlined in the table later in this section.

The communications channels are normally connected in a ring configuration, as shown in the following figure. The transmitter of one module is connected to the receiver of the next module. The transmitter of this second module is then connected to the receiver of the next module in the ring. This is continued to form a communications ring. The figure illustrates a ring of four UR-series relays with the following connections: UR1-Tx to UR2-Rx, UR2-Tx to UR3-Rx, UR3-Tx to UR4-Rx, and UR4-Tx to UR1-Rx. A maximum of 16 URs can be connected in a single ring.

Figure 3-30: Direct input and output single-channel connection

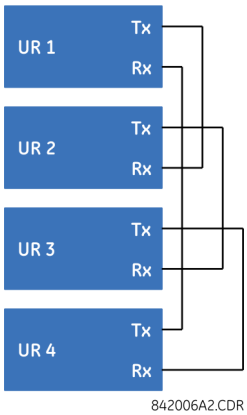

Inter-relay communication (IRC) modules with protocol C37.94 and G.703 are designed for back-to-back communication connections, so the ring configuration shown in the previous figure does not apply. To establish inter-relay communication in more than two URs, you need to have a two-channel IRC module and enable the **DIRECT I/O CHANNEL CROSSOVER** setting in all relays, as shown in the next figure. This configuration can be expanded to 16 URs, and this configuration does not provide a redundancy ring since both channels are made into a single ring by the channel crossover function. As per the figure entitled Typical Pin Interconnection between Two G.703 Interfaces later in this chapter, the clock is supplied typically by multiplexer (MUX) and all URs are in Loop Timing Mode. If there is no MUX, then UR1 and UR3 can be in Internal Timing Mode and UR2 and UR4 can be in Loop Timing Mode. That is, connected channels must have opposite timing modes.

Figure 3-31: Ring configuration for C37.94 module (concept also applies to G.703)

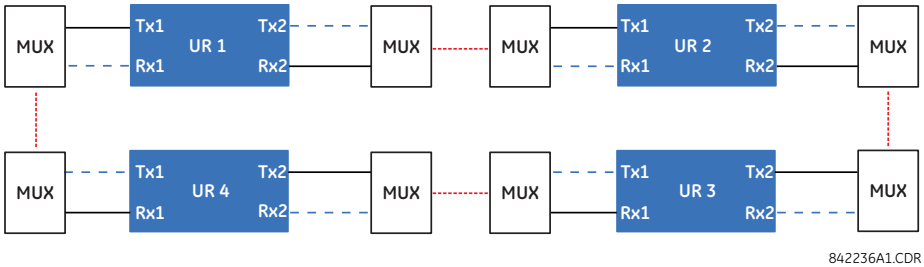

The interconnection for dual-channel type 7 communications modules is shown as follows. Two-channel modules allow for a redundant ring configuration. That is, two rings can be created to provide an additional independent data path. The required connections are: UR1-Tx1 to UR2-Rx1, UR2-Tx1 to UR3-Rx1, UR3-Tx1 to UR4-Rx1, and UR4-Tx1 to UR1-Rx1 for the first ring; and UR1-Tx2 to UR4-Rx2, UR4-Tx2 to UR3-Rx2, UR3-Tx2 to UR2-Rx2, and UR2-Tx2 to UR1-Rx2 for the second ring.

Figure 3-32: Direct input and output dual-channel connection

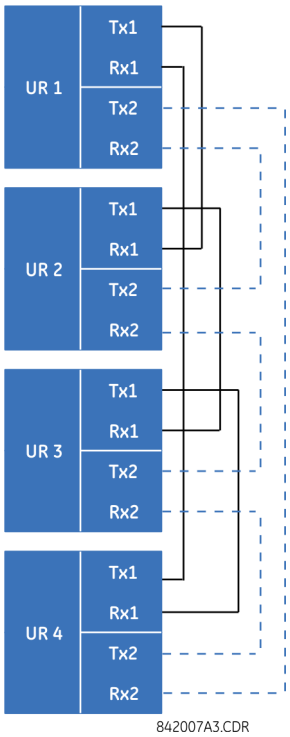

The following figure shows the connection for three UR-series relays using two independent communication channels. UR1 and UR3 have single type 7 communication modules; UR2 has a dual-channel module. The two communication channels can be of different types, depending on the type 7 modules used. To allow the direct input and output data to cross-over from channel 1 to channel 2 on UR2, set the **DIRECT I/O CHANNEL CROSSOVER** setting to "Enabled" on UR2. This forces UR2 to forward messages received on Rx1 out Tx2, and messages received on Rx2 out Tx1.

Figure 3-33: Direct input and output single/dual channel combination connection

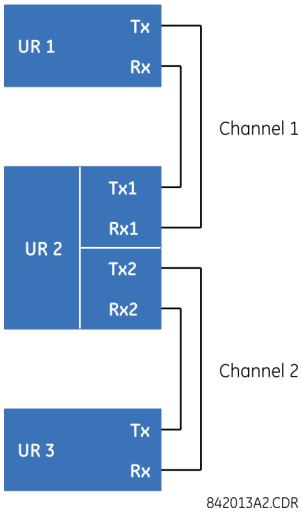

The inter-relay communications modules are available with several interfaces and some are outlined here in more detail. Those that apply depend on options purchased. The options are outlined in the Inter-Relay Communications section of the Order Code tables in Chapter 2. All of the fiber modules use ST type connectors.

3.4.2 Fiber: LED and ELED transmitters

The following figure shows the configuration for the 7A, 7B, 7C, 7H, 7I, and 7J fiber-only modules.

Figure 3-34: LED and ELED fiber modules

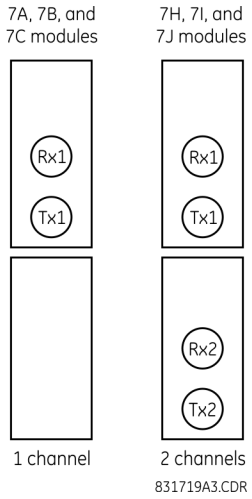

3.4.3 Fiber laser transmitters

The following figure shows the configuration for the 72, 73, 7D, and 7K fiber-laser modules.

Figure 3-35: 7x Laser fiber modules

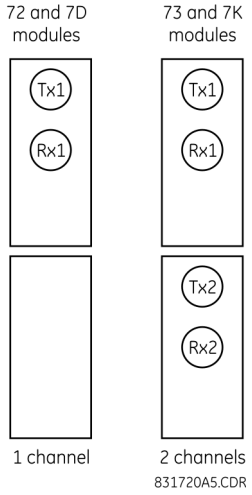

The following figure shows configuration for the 2I and 2J fiber-laser modules.

3

Figure 3-36: 2I and 2J laser fiber modules

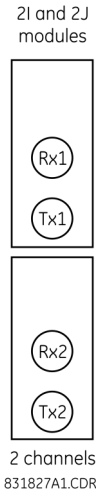

⚠CAUTION **Observing any fiber transmitter output can injure the eye.**

NOTICE When using a laser Interface, attenuators can be necessary to ensure that you do not exceed the maximum optical input power to the receiver.

3.4.4 G.703 interface

3.4.4.1 Description

The following figure shows the 64K ITU G.703 co-directional interface configuration. This is module 7S.

The G.703 module is fixed at 64 kbps. The **SETTINGS ⇨ PRODUCT SETUP ⇨⇩ DIRECT I/O ⇨ DIRECT I/O DATA RATE** setting is not applicable to this module.

AWG 24 twisted shielded pair wiring is recommended for external connections, with the shield grounded only at one end. Connecting the shield to pin X1a or X6a grounds the shield since these pins are connected internally to ground. Thus, if pin X1a or X6a is used to ground the shield at one end, do not ground the shield at the other end. This interface module is protected by surge suppression devices.

Figure 3-37: G.703 interface configuration

7S	G.703 channel 1	Shield	~1a
		Tx –	~1b
		Rx –	~2a
		Tx +	~2b
		Rx +	~3a
G.703 communications	Surge	⏚	~3b
	G.703 channel 2	Shield	~6a
		Tx –	~6b
		Rx –	~7a
		Tx +	~7b
		Rx +	~8a
	Surge	⏚	~8b

842773A3.CDR

The following figure shows the typical pin interconnection between two G.703 interfaces. For the actual physical arrangement of these pins, see the Rear Terminal Layout section earlier in this chapter. All pin interconnections are to be maintained for a connection to a multiplexer.

Figure 3-38: Typical pin interconnection between two G.703 interfaces

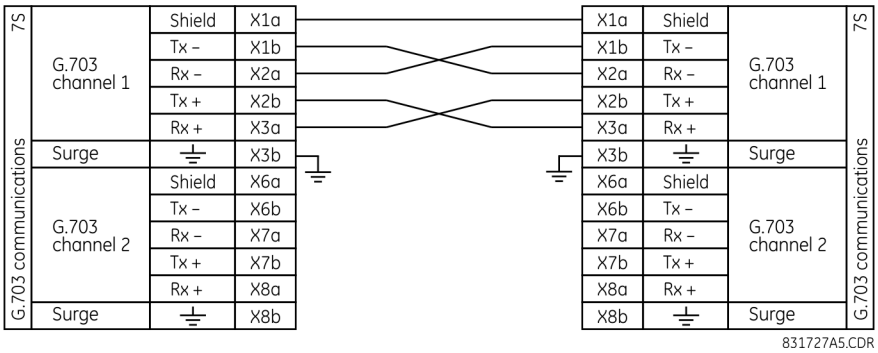

NOTE

Pin nomenclature differs from one manufacturer to another. It is not uncommon to see pinouts numbered TxA, TxB, RxA, and RxB. In such cases, assume that "A" is equivalent to "+" and "B" is equivalent to "–."

3.4.4.2 G.703 selection switch procedures

1. With the power to the relay off, remove the G.703 module (7R or 7S) as follows. Record the original location of the module to help ensure that the same or replacement module is inserted into the correct slot.
2. Simultaneously pull the ejector/inserter clips located at the top and at the bottom of each module in order to release the module for removal. (For more information on accessing modules, see the Maintenance chapter.)
3. Remove the module cover screw.
4. Remove the top cover by sliding it towards the rear and then lift it upwards.
5. Set the timing selection switches (channels 1 and 2) to the required timing modes.
6. Replace the top cover and the cover screw.
7. Re-insert the G.703 module. Take care to ensure that the correct module type is inserted into the correct slot position. The ejector/inserter clips located at the top and bottom of each module must be in the disengaged position as the module is inserted smoothly into the slot. Once the clips have cleared the raised edge of the chassis, engage the clips simultaneously. When the clips have locked into position, the module is inserted fully.

3

Figure 3-39: G.703 timing selection switch setting

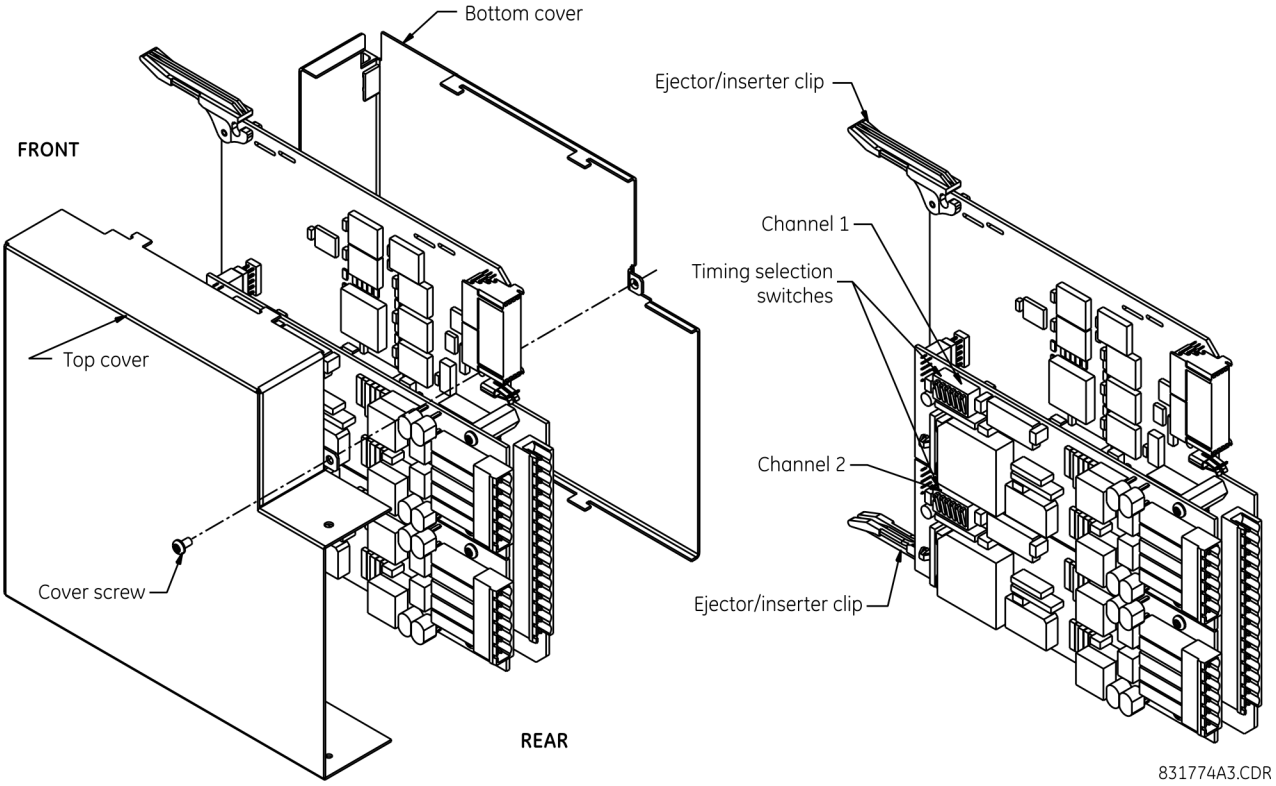

Table 3-6: G.703 timing selections

Switches	Function
S1	OFF → octet timing disabled ON → octet timing 8 kHz
S5 and S6	S5 = OFF and S6 = OFF → loop timing mode S5 = ON and S6 = OFF → internal timing mode S5 = OFF and S6 = ON → minimum remote loopback mode S5 = ON and S6 = ON → dual loopback mode

3.4.4.3 G.703 octet timing

If octet timing is enabled (ON), this 8 kHz signal is asserted during the violation of bit 8 (LSB) necessary for connecting to higher order systems. When B30s are connected back-to-back, octet timing is disabled (OFF).

3.4.4.4 G.703 timing modes

There are two timing modes for the G.703 module: internal timing mode and loop timing mode (default).

- **Internal Timing Mode** — The system clock is generated internally. Therefore, set the G.703 timing selection to internal timing mode for back-to-back (UR-to-UR) connections. For back-to-back connections, set octet timing (S1 = OFF) and timing mode to internal timing (S5 = ON and S6 = OFF).
- **Loop Timing Mode** — The system clock is derived from the received line signal. Therefore, set the G.703 timing selection to loop timing mode for connections to higher order systems. For connection to a higher order system (UR-to-multiplexer, factory defaults), set to octet timing (S1 = ON) and set timing mode to loop timing (S5 = OFF and S6 = OFF).

The switch settings for the internal and loop timing modes are shown.

Figure 3-40: Switches

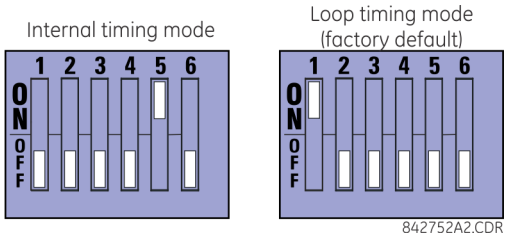

3.4.4.5 G.703 test modes

In *minimum remote loopback mode*, the multiplexer is enabled to return the data from the external interface without any processing to assist in diagnosing G.703 line-side problems irrespective of clock rate. Data enters from the G.703 inputs, passes through the data stabilization latch that also restores the proper signal polarity, passes through the multiplexer, and then returns to the transmitter. The differential received data is processed and passed to the G.703 transmitter module after which point the data is discarded. The G.703 receiver module is fully functional and continues to process data and passes it to the differential Manchester transmitter module. Since timing is returned as it is received, the timing source is expected to be from the G.703 line side of the interface.

Figure 3-41: G.703 minimum remote loopback mode

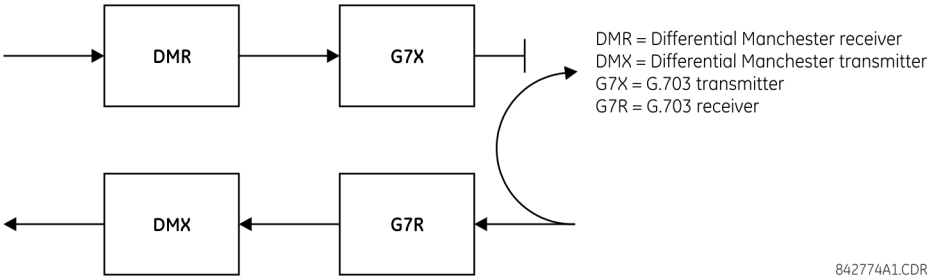

In *dual loopback mode*, the multiplexers are active and the functions of the circuit are divided into two with each receiver/transmitter pair linked together to deconstruct and then reconstruct their respective signals. Differential Manchester data enters the Differential Manchester receiver module and then is returned to the differential Manchester transmitter module. Likewise, G.703 data enters the G.703 receiver module and is passed through to the G.703 transmitter module to be returned as G.703 data. Because of the complete split in the communications path and because, in each case, the clocks are extracted and reconstructed with the outgoing data, in this mode there must be two independent sources of timing. One source lies on the G.703 line side of the interface while the other lies on the differential Manchester side of the interface.

Figure 3-42: G.703 dual loopback mode

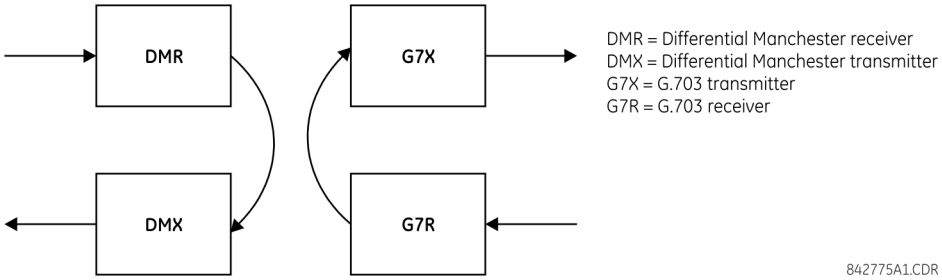

3.4.5 RS422 interface

3.4.5.1 Description

There are two RS422 inter-relay communications modules available: single-channel RS422 (module 7T) and dual-channel RS422 (module 7W). The modules can be configured to run at 64 kbps or 128 kbps. AWG 20-24 twisted shielded pair cable is recommended for external connections. These modules are protected by optically-isolated surge suppression devices.

The shield pins (6a and 7b) are connected internally to the ground pin (8a). Proper shield termination is as follows:

- Site 1 — Terminate shield to pins 6a or 7b or both
- Site 2 — Terminate shield to COM pin 2b

Match the clock terminating impedance with the impedance of the line.

Figure 3-43: RS422 interface connections

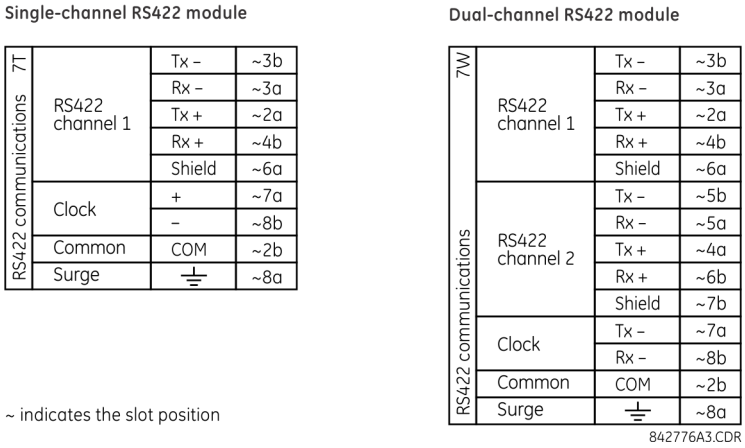

The following figure shows the typical pin interconnection between two single-channel RS422 interfaces installed in slot W. All pin interconnections are to be maintained for a connection to a multiplexer.

Figure 3-44: Typical pin interconnect between two RS422 interfaces

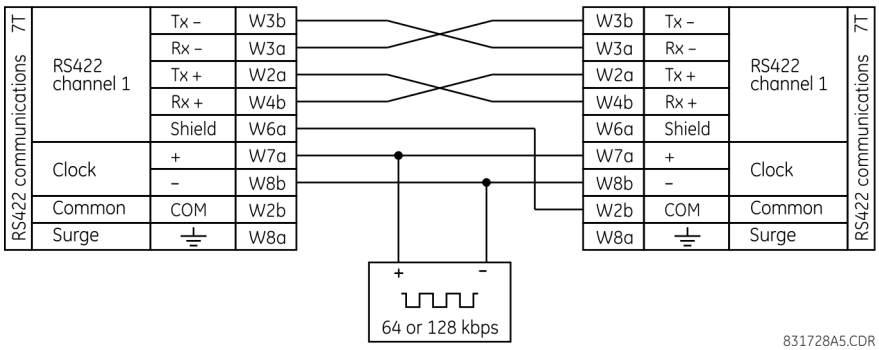

3.4.5.2 Two-channel application via multiplexers

The RS422 interface can be used for single-channel or two-channel applications over SONET/SDH or multiplexed systems. When used in single-channel applications, the RS422 interface links to higher-order systems in a typical way, observing transmit (Tx), receive (Rx), and send timing (ST) connections. However, when used in two-channel applications, certain criteria must be followed since there is one clock input for the two RS422 channels. The system functions correctly when the following connections are observed and your data module has a terminal timing feature. Terminal timing is a common feature in most synchronous data units that allows the module to accept timing from an external source. Using the terminal timing feature, two-channel applications can be achieved if these connections are followed: the send timing

outputs from the multiplexer (data module 1) connects to the clock inputs of the UR RS422 interface in the usual way. In addition, the send timing outputs of data module 1 are also paralleled to the terminal timing inputs of data module 2. By using this configuration, the timing for both data modules and both UR RS422 channels is derived from a single clock source. As a result, data sampling for both of the UR RS422 channels is synchronized via the send timing leads on data module 1, shown as follows. If the terminal timing feature is not available or this type of connection is not wanted, the G.703 interface is a viable option that does not impose timing restrictions.

Figure 3-45: Timing configuration for RS422 two-channel, three-terminal application

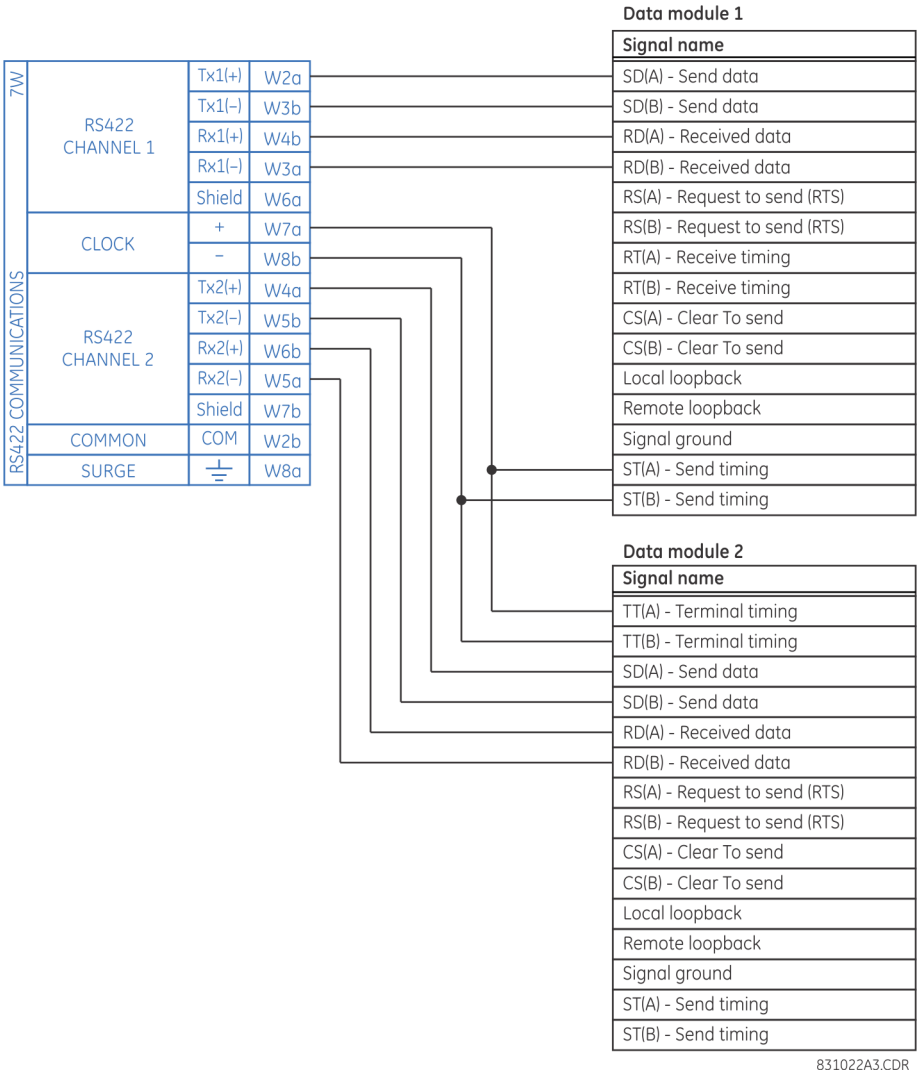

Data module 1 provides timing to the B30 RS422 interface via the ST(A) and ST(B) outputs. Data module 1 also provides timing to data module 2 TT(A) and TT(B) inputs via the ST(A) and AT(B) outputs. The data module pin numbers have been omitted in the figure because they vary by manufacturer.

3.4.5.3 Transmit timing

The RS422 interface accepts one clock input for transmit timing. It is important that the rising edge of the 64 kHz transmit timing clock of the multiplexer interface is sampling the data in the center of the transmit data window. Therefore, it is important to confirm clock and data transitions to ensure proper system operation. For example, the following figure shows the positive edge of the Tx clock in the center of the Tx data bit.

3

Figure 3-46: Clock and data transitions

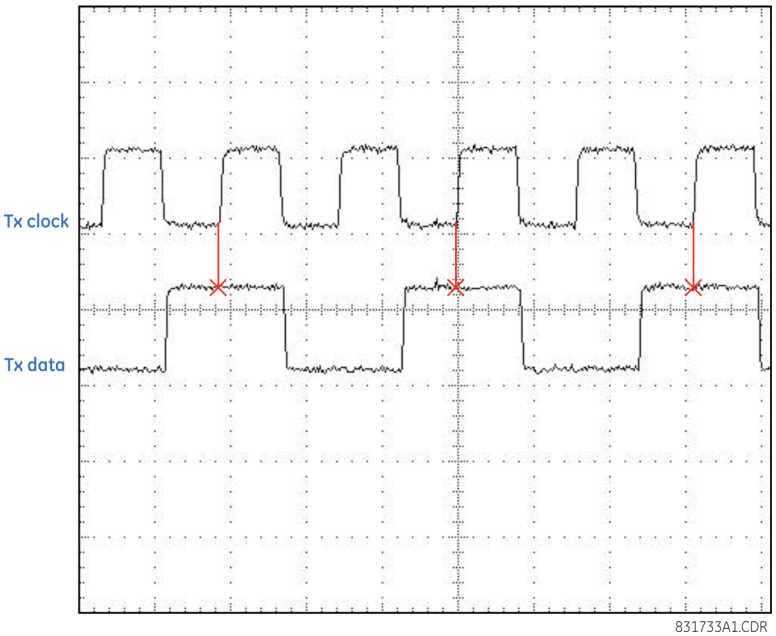

3.4.5.4 Receive timing

The RS422 interface utilizes NRZI-MARK modulation code and therefore does not rely on an Rx clock to recapture data. NRZI-MARK is an edge-type, invertible, self-clocking code.

To recover the Rx clock from the data-stream, an integrated digital phase lock loop (DPLL) circuit is utilized. The DPLL is driven by an internal clock, which is 16-times over-sampled, and uses this clock along with the data-stream to generate a data clock that can be used as the serial communication controller (SCC) receive clock.

3.4.6 RS422 and fiber interface

The following figure shows the combined RS422 plus fiberoptic interface configuration at 64 K baud. The 7L, 7M, 7N, 7P, and 74 modules are used in two-terminal with a redundant channel or three-terminal configurations where channel 1 is employed via the RS422 interface (possibly with a multiplexer) and channel 2 via direct fiber.

AWG 20-24 twisted shielded pair wiring is recommended for external RS422 connections. Ground the shield only at one end. For the direct fiber channel, address power budget issues properly.

NOTICE When using a laser interface, attenuators can be necessary to ensure that you do not exceed maximum optical input power to the receiver.

Figure 3-47: RS422 and fiber interface connection

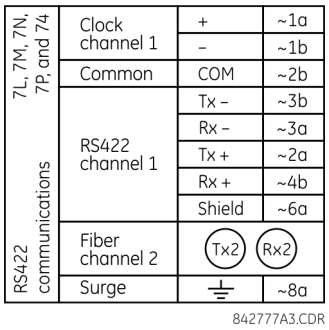

The connections shown in the figure are for multiplexers configured as data communications equipment (DCE) units.

3.4.7 G.703 and fiber interface

The following figure shows the combined G.703 plus fiberoptic interface configuration at 64 kbps. The 7E, 7F, 7G, 7Q, and 75 modules are used in configurations where channel 1 is employed via the G.703 interface (possibly with a multiplexer) and channel 2 via direct fiber. AWG 24 twisted shielded pair wiring is recommended for external G.703 connections connecting the shield to pin 1a at one end only. For the direct fiber channel, address power budget issues properly. See previous sections for details on the G.703 and fiber interfaces.

NOTICE When using a laser interface, attenuators can be necessary to ensure that you do not exceed the maximum optical input power to the receiver.

Figure 3-48: G.703 and fiber interface connection

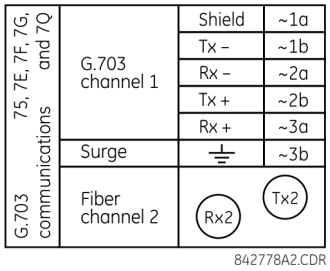

3.4.8 IEEE C37.94 interface

The UR-series IEEE C37.94 communication modules (module types 2G, 2H, 2I, 2J, 76, and 77) are designed to interface with IEEE C37.94 compliant digital multiplexers or an IEEE C37.94 compliant interface converter for use with direct input and output applications. The IEEE C37.94 standard defines a point-to-point optical link for synchronous data between a multiplexer and a teleprotection device. Data speed is typically 64 kbps, but the standard provides for speeds up to 64*n* kbps, where n = 1, 2,..., 12. The UR-series C37.94 communication modules are either 64 kbps (with n fixed at 1) or 128 kbps (with n fixed at 2). The frame is a valid International Telecommunications Union (ITU-T) recommended G.704 pattern from the standpoint of framing and data rate. The frame is 256 bits and is repeated at a frame rate of 8000 Hz, with a resultant bit rate of 2048 kbps.

The specifications for the module are as follows:

- IEEE standard — C37.94 for 1 × 128 kbps optical fiber interface (for 2G and 2H modules) or C37.94 for 2 × 64 kbps optical fiber interface (for 76 and 77 modules)
- Fiber optic cable type — 50 nm or 62.5 µm core diameter optical fiber
- Fiber optic mode — multimode
- Fiber optic cable length — up to 2 km
- Fiber optic connector — type ST
- Wavelength — 820 ±40 nm
- Connection — as per all fiber optic connections, a Tx-to-Rx connection is required

The UR-series C37.94 communication module can be connected directly to any compliant digital multiplexer that supports the IEEE C37.94 standard. The figure shows the concept.

Figure 3-49: IEEE C37.94 connection to compliant digital multiplexer

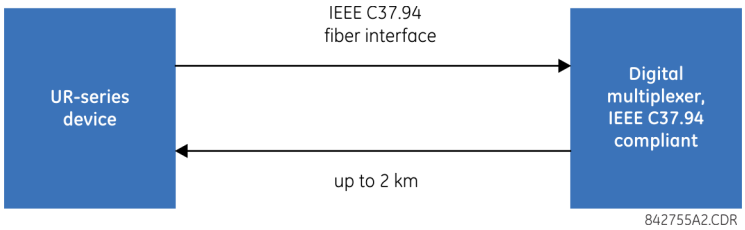

The UR-series C37.94 communication module can be connected to the electrical interface (G.703, RS422, or X.21) of a non-compliant digital multiplexer via an optical-to-electrical interface converter that supports the IEEE C37.94 standard. The following figure shows the concept.

3

Figure 3-50: IEEE C37.94 connection to non-compliant digital multiplexer

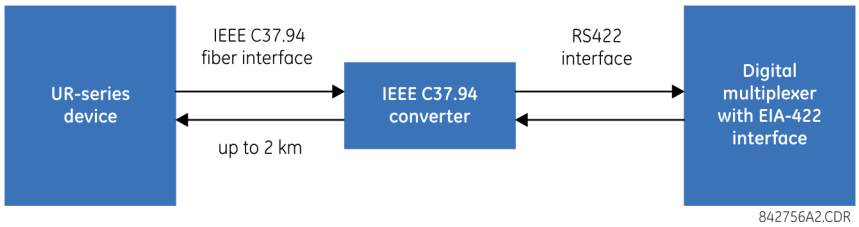

In 2008, GE Grid Solutions released revised modules 76 and 77 for C37.94 communication to enable multi-ended fault location functionality with firmware 5.60 release and higher. All modules 76 and 77 shipped since the change support this feature and are fully backward compatible with firmware releases below 5.60. For customers using firmware release 5.60 and higher, the module can be identified with "Rev D" printed on the module and is to be used on all ends of B30 communication for two and three terminal applications. Failure to use it at all ends results in intermittent communication alarms. For customers using firmware revisions below 5.60, it is not required to match the revision of the modules installed.

The UR-series C37.94 communication module has six switches to set the clock configuration. The following figure shows the functions of these control switches.

Figure 3-51: Switches

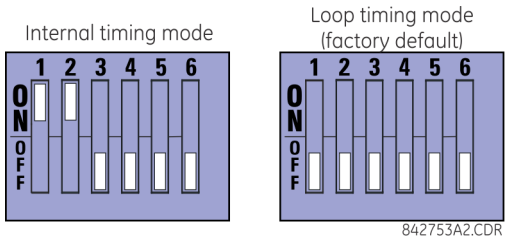

For the internal timing mode, the system clock is generated internally. Therefore, set the timing switch selection to internal timing for relay 1 and loop timed for relay 2. There must be only one timing source configured.

For the looped timing mode, the system clock is derived from the received line signal. Therefore, set the timing selection to loop timing mode for connections to higher order systems.

The IEEE C37.94 communications module cover removal procedure is as follows:

1. With power to the relay off, remove the IEEE C37.94 module (type 2G, 2H, 2I, 2J, 76, or 77 module) as follows. Record the original location of the module to help ensure that the same or replacement module is inserted into the correct slot.
2. Simultaneously pull the ejector/inserter clips located at the top and bottom of each module in order to release the module for removal.
3. Remove the module cover screw.

4. Remove the top cover by sliding it towards the rear and then lift it upwards.
5. Set the timing selection switches (channels 1 and 2) to the required timing modes (see description earlier).
6. Replace the top cover and the cover screw.
7. Re-insert the IEEE C37.94 module. Take care to ensure that the **correct** module type is inserted into the **correct** slot position. The ejector/inserter clips located at the top and at the bottom of each module must be in the disengaged position as the module is inserted smoothly into the slot. Once the clips have cleared the raised edge of the chassis, engage the clips simultaneously. When the clips have locked into position, the module is inserted fully.

Figure 3-52: IEEE C37.94 timing selection switch setting

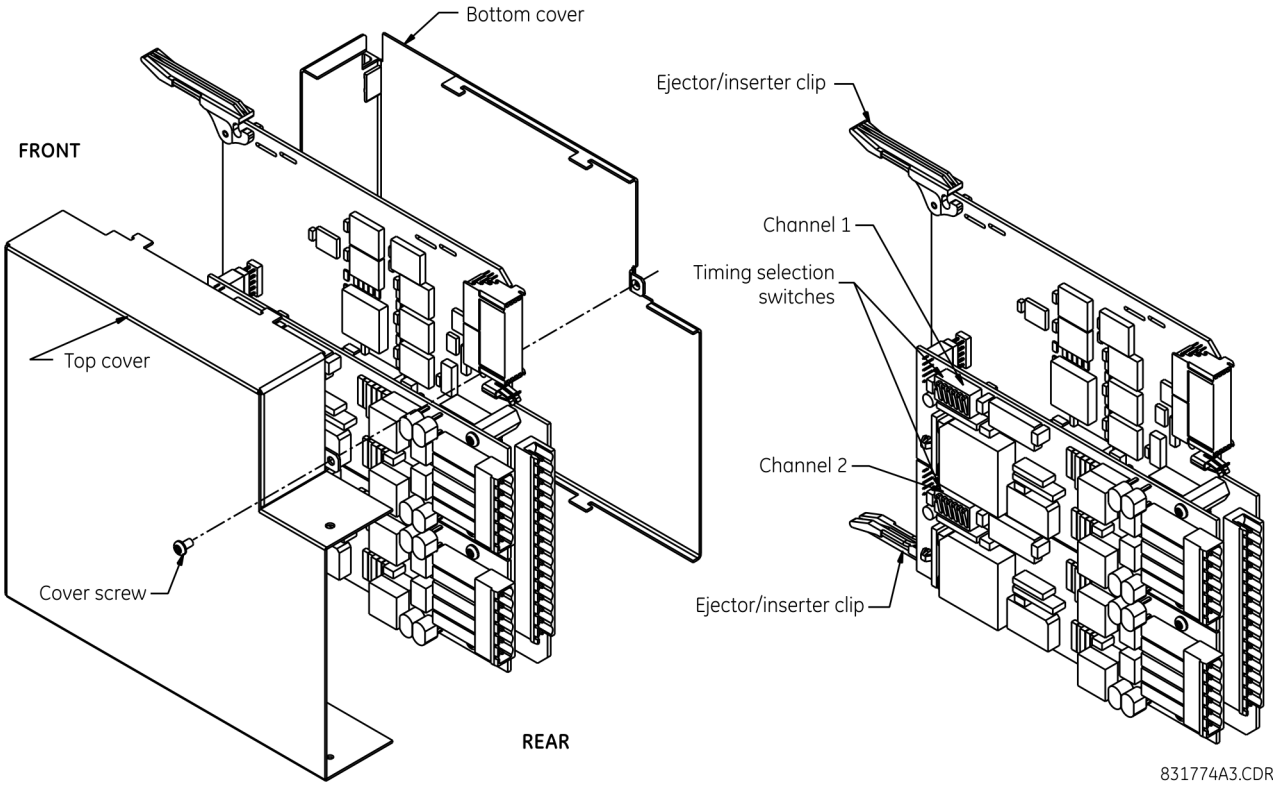

Modules shipped since January 2012 have status LEDs that indicate the status of the DIP switches, as shown in the following figure.

3

Figure 3-53: Status LEDs

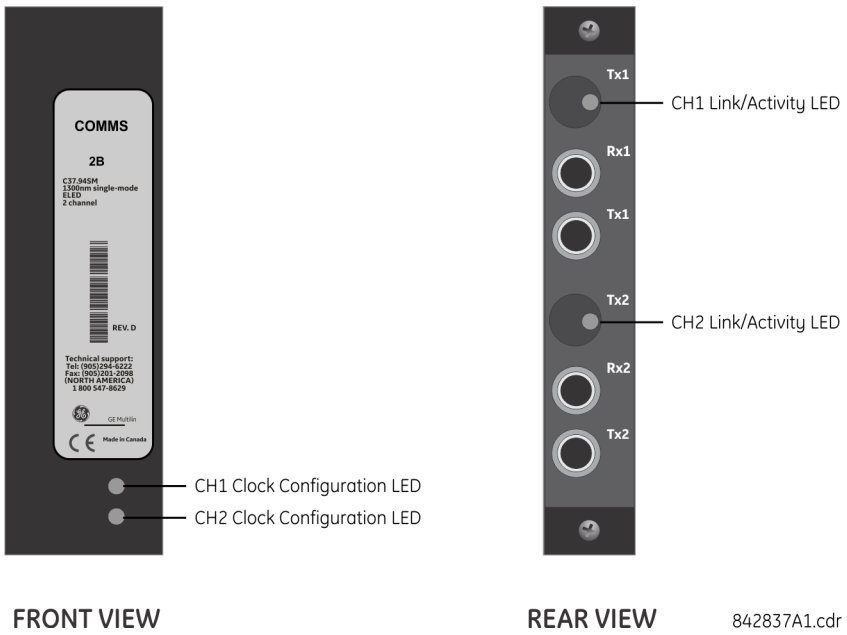

The clock configuration LED status is as follows:

- Flashing green — loop timing mode while receiving a valid data packet
- Flashing yellow — internal mode while receiving a valid data packet
- Solid red — (switch to) internal timing mode while not receiving a valid data packet

The link/activity LED status is as follows:

- Flashing green — FPGA is receiving a valid data packet
- Solid yellow — FPGA is receiving a "yellow bit" and remains yellow for each "yellow bit"
- Solid red — FPGA is not receiving a valid packet or the packet received is invalid

3.4.9 C37.94SM interface

The UR-series C37.94SM communication modules (2A and 2B) are designed to interface with modified IEEE C37.94 compliant digital multiplexers or IEEE C37.94 compliant interface converters that have been converted from 820 nm multi-mode fiber optics to 1300 nm ELED single-mode fiber optics. The IEEE C37.94 standard defines a point-to-point optical link for synchronous data between a multiplexer and a teleprotection device. This data is typically 64 kbps, but the standard provides for speeds up to 64*n* kbps, where *n* = 1, 2,..., 12. The UR-series C37.94SM communication module is 64 kbps only with *n* fixed at 1. The frame is a valid International Telecommunications Union (ITU-T) recommended G.704 pattern from the standpoint of framing and data rate. The frame is 256 bits and is repeated at a frame rate of 8000 Hz, with a resultant bit rate of 2048 kbps.

The specifications for the module are as follows:

- Emulated IEEE standard — Emulates C37.94 for 1 × 64 kbps optical fiber interface (modules set to *n* = 1 or 64 kbps)
- Fiber optic cable type — 9/125 μm core diameter optical fiber
- Fiber optic mode — Single-mode, ELED compatible with HP HFBR-1315T transmitter and HP HFBR-2316T receiver
- Fiber optic cable length — Up to 11.4 km
- Fiber optic connector — Type ST
- Wavelength — 1300 ±40 nm
- Connection — As per all fiber optic connections, a Tx-to-Rx connection is required

The UR-series C37.94SM communication module can be connected directly to any compliant digital multiplexer that supports C37.94SM, as shown.

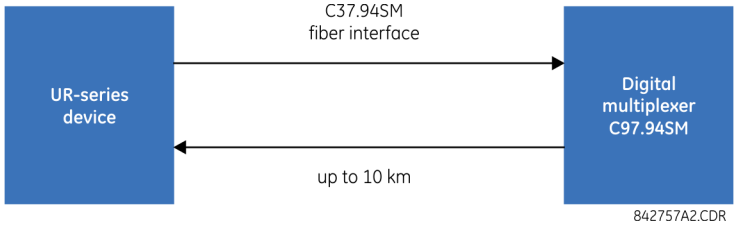

It also can be connected directly to any other UR-series relay with a C37.94SM module, as shown.

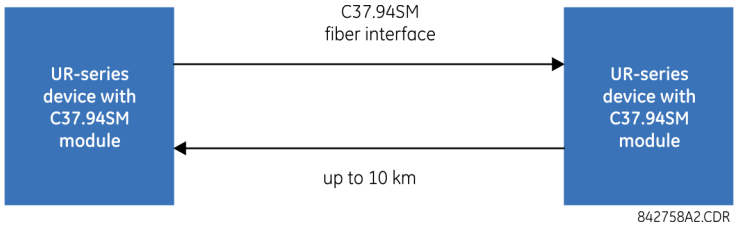

In 2008, GE Grid Solutions released revised modules 2A and 2B for C37.94SM communication to enable multi-ended fault location functionality with firmware 5.60 release and higher. All modules 2A and 2B shipped since the change support this feature and are fully backward compatible with firmware releases below 5.60. For customers using firmware release 5.60 and higher, the module can be identified with "Rev D" printed on the module and is to be used on all ends of B30 communication for two and three terminal applications. Failure to use it at all ends results in intermittent communication alarms. For customers using firmware revisions below 5.60, it is not required to match the revision of the modules installed.

The UR-series C37.94SM communication module has six switches that are used to set the clock configuration. The following figure shows the functions of these control switches.

Figure 3-54: Switches

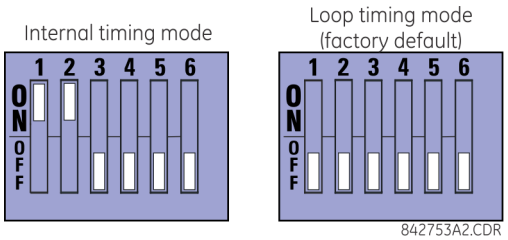

For the internal timing mode, the system clock is generated internally. Therefore, set the timing switch selection to internal timing for relay 1 and loop timed for relay 2. There must be only one timing source configured.

For the looped timing mode, the system clock is derived from the received line signal. Therefore, set the timing selection to loop timing mode for connections to higher-order systems.

The C37.94SM communications module cover removal procedure is as follows:

1. With power to the relay off, remove the C37.94SM module (module 2A or 2B) as follows. Record the original location of the module to help ensure that the same or replacement module is inserted into the correct slot.
2. Simultaneously pull the ejector/inserter clips located at the top and at the bottom of each module in order to release the module for removal.
3. Remove the module cover screw.
4. Remove the top cover by sliding it towards the rear and then lift it upwards.
5. Set the timing selection switches (channels 1 and 2) to the required timing modes (see description earlier).

6. Replace the top cover and the cover screw.
7. Re-insert the C37.94SM module. Take care to ensure that the **correct** module type is inserted into the **correct** slot position. The ejector/inserter clips located at the top and at the bottom of each module must be in the disengaged position as the module is inserted smoothly into the slot. Once the clips have cleared the raised edge of the chassis, engage the clips simultaneously. When the clips have locked into position, the module is inserted fully.

Figure 3-55: C37.94SM timing selection switch setting

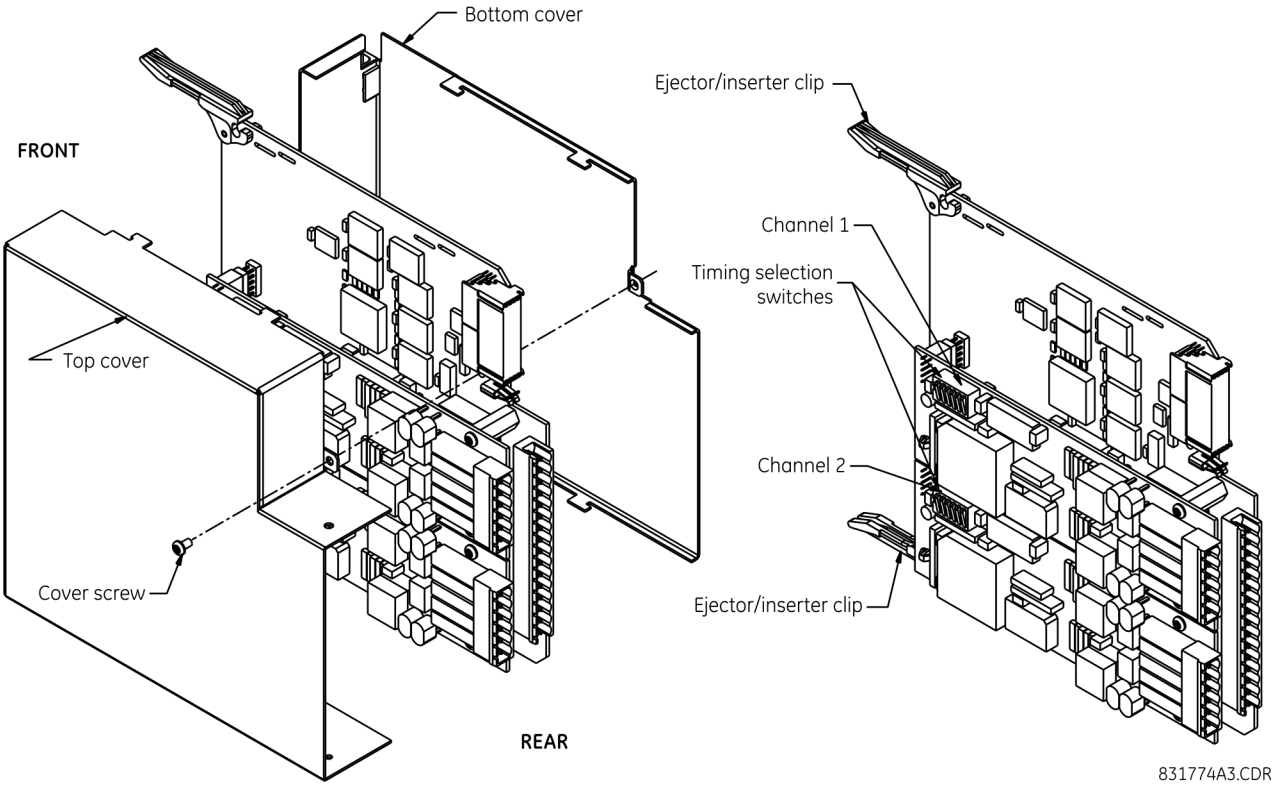

Modules shipped since January 2012 have status LEDs that indicate the status of the DIP switches, as shown in the following figure.

Figure 3-56: Status LEDs

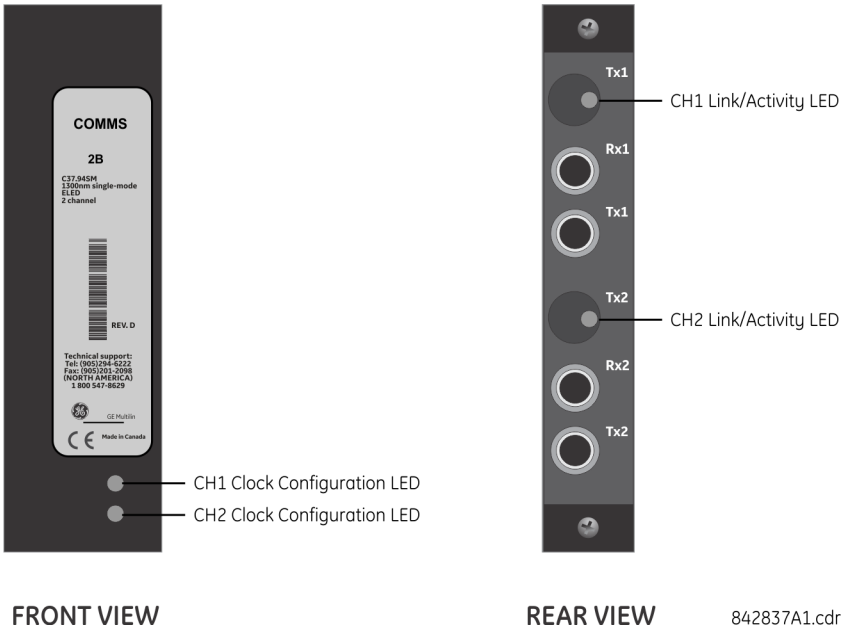

The clock configuration LED status is as follows:

- Flashing green — loop timing mode while receiving a valid data packet
- Flashing yellow — internal mode while receiving a valid data packet
- Solid red — (switch to) internal timing mode while not receiving a valid data packet

The link/activity LED status is as follows:

- Flashing green — FPGA is receiving a valid data packet
- Solid yellow — FPGA is receiving a "yellow bit" and remains yellow for each "yellow bit"
- Solid red — FPGA is not receiving a valid packet or the packet received is invalid

3.5 Activate relay

The relay is in the default “Not Programmed” state when it leaves the factory. When powered up successfully, the "Trouble" LED is on and the "In Service" LED is off. The relay in the “Not Programmed” state blocks signaling of any output relay. These conditions remain until the relay is explicitly put in the “Programmed” state.

RELAY SETTINGS: **Not Programmed**	When the relay is powered up, the "Trouble LED" is on, the "In Service" LED is off, and this message displays, indicating that the relay is in the "Not Programmed" state and is safeguarding (output relays blocked) against the installation of a relay whose settings have not been entered. This message remains until the relay is explicitly put in the "Programmed" state.

The relay can be activated on the front panel or in the EnerVista software.

To activate the relay using the front panel:

1. Press the **MENU** key until the **SETTINGS** header flashes momentarily and the **PRODUCT SETUP** message displays.
2. Press the **MESSAGE** right arrow until the **SECURITY** message displays.
3. Press the **MESSAGE** down arrow until the **INSTALLATION** message displays.
4. Press the **MESSAGE** right arrow until the **RELAY SETTINGS: Not Programmed** message displays.

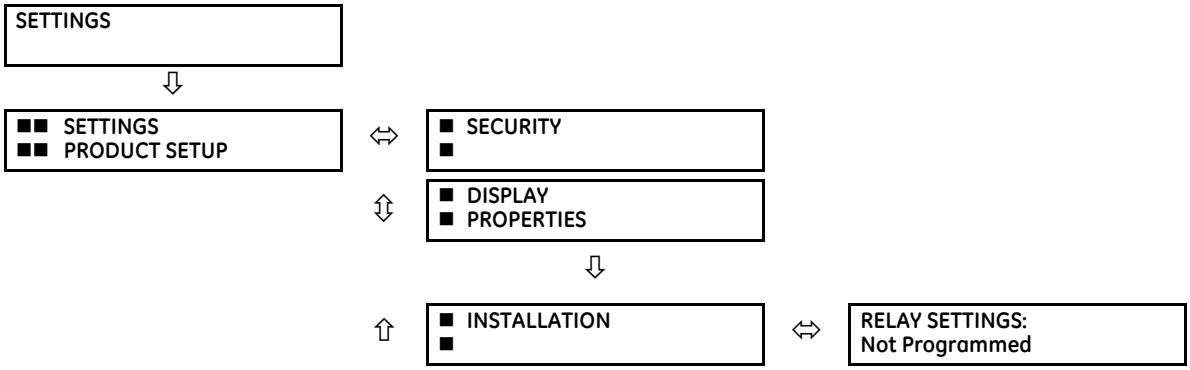

5. After the **RELAY SETTINGS: Not Programmed** message displays, press a **VALUE** key to change the selection to "Programmed."
6. Press the **ENTER** key to save the change.

7. When the "NEW SETTING HAS BEEN STORED" message appears, the relay is in "Programmed" state and the "In Service" LED turns on.

To activate the relay using EnerVista software:

1. Navigate to **Settings > Product Setup > Installation** and change the **Relay Settings** field to "Programmed."
2. Save the change.

3.6 Install software

3.6.1 EnerVista communication overview

The EnerVista UR Setup software communicates to the relay via the faceplate RS232 port or the rear panel RS485 / Ethernet ports.

To communicate via the faceplate RS232 port, use a standard straight-through serial cable. Connect the DB-9 male end to the relay and the DB-9 or DB-25 female end to the computer COM2 port as described in the CPU Communication Ports section earlier in this chapter.

Figure 3-57: Relay communication options

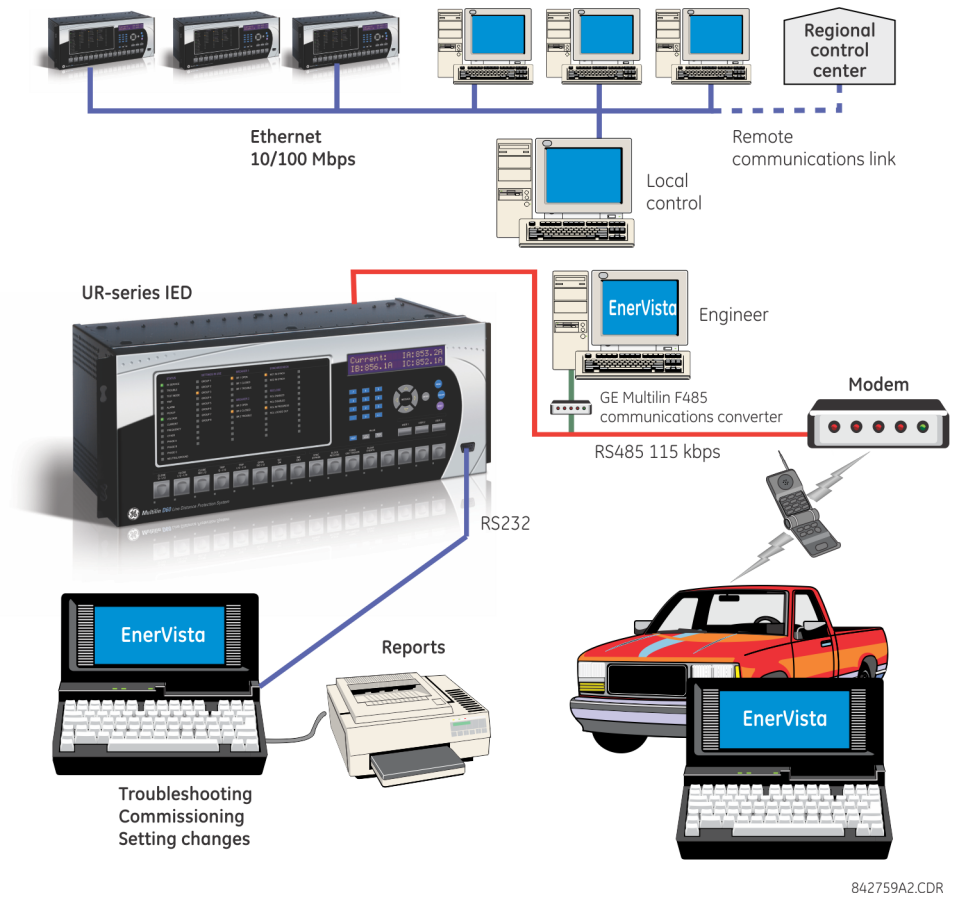

To communicate through the B30 rear RS485 port from a computer RS232 port, the GE Grid Solutions RS232/RS485 converter box is required. This device (catalog number F485) connects to the computer using a straight-through serial cable. A shielded twisted-pair (20, 22, or 24 AWG) connects the F485 converter to the B30 rear communications port. The converter terminals (+, –, GND) are connected to the B30 communication module (+, –, COM) terminals. See the CPU Communication Ports section in chapter 3 for details. The line is terminated with an R-C network (that is, 120 Ω, 1 nF) as described in this chapter.

3.6.2 System requirements

The relay front panel or the EnerVista UR Setup software can be used to communicate with the relay. The software interface is the preferred method to edit settings and view actual values because the computer monitor can display more information.

The minimum system requirements for the EnerVista software are as follows:

- Intel Pentium processor (dual core)
- Microsoft Windows 7 with Service Pack 1 (32-bit or 64-bit) or Windows Server 2008 Release 2 with Service Pack 1 (64-bit), in the required EnerVista language
- 1 GB free hard drive space
- 2 GB RAM
- 1280 x 800 display screen

3.6.3 Install software

After ensuring that the requirements for using EnerVista UR Setup software are met, there are three ways to install the software:

- From the DVD
- Download EnerVista Launchpad software from http://www.gegridsolutions.com/multilin and install it
- Download the EnerVista UR Setup software from http://www.gegridsolutions.com/multilin and install it

Install on a computer that has an operating system in the required language, for example a German operating system for use with EnerVista software in German.

To install the software from the DVD and using EnerVista Launchpad:

1. Insert the DVD into the DVD drive of your computer.
2. Click the **Install Now** button and follow the instructions.
3. When installation is complete, start the EnerVista Launchpad application.
4. Click the **IED Setup** section of the **Launch Pad** window.

Figure 3-58: Adding a UR device in Launchpad window

5. In the EnerVista Launch Pad window, click the **Add Product** button and select the appropriate product as follows. Select the **Web** option to ensure the most recent software release, or select **CD** if you do not have an Internet connection, then click the **Add Now** button to list software items for the product. EnerVista Launchpad obtains the software from the Internet or DVD and automatically starts the installation program.

Figure 3-59: Identifying the UR device type

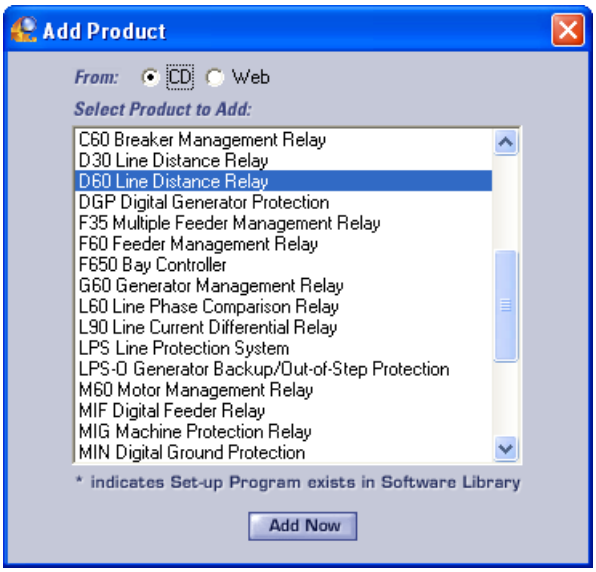

6. Select the complete path, including the new directory name, where the EnerVista UR Setup software is to be installed.

7. Click the **Next** button to begin the installation. The files are installed in the directory indicated, and the installation program automatically creates icons and adds an entry to the Windows start menu.
8. Click **Finish** to complete the installation. The UR device is added to the list of installed intelligent electronic devices (IEDs) in the EnerVista Launchpad window, as shown.

Figure 3-60: UR device added to Launchpad window

3.7 Add device to software

You connect remotely to the B30 through the rear RS485 or Ethernet port with a computer running the EnerVista UR Setup software. The B30 also can be accessed locally with a computer through the front panel RS232 port or the rear Ethernet port using the Quick Connect feature.

The following procedures are outlined:

- Add device for serial access; see the Configure Serial Connection section
- Add device for the rear Ethernet port; see the Configure Ethernet Connection section
- Add device for access using a modem; see the Configure Modem Connection section
- Connect locally with a computer through either the front RS232 port or rear Ethernet port; see the Connect to the B30 section
- Discover automatically UR devices within a network; see the Automatic Discovery of UR Devices section

Devices are listed in the order entered in the Device Setup window.

Devices are listed alphabetically in the main software window, for example B30, B90, T35. Use the **Device Name** to order them as required, for example B30 Odessa, B30 Truro, B90, T35.

You cannot import a file to add a device to the software. You can import settings as outlined at the end of the chapter.

The Quick Connect button can also be used to add devices. The device is added to a Quick Connect menu item in the Online Window area, cannot be moved from it to another grouping, and needs to be renamed in the Device Setup window. GE instead recommends using the Device Setup window to add devices, as outlined here.

3.7.1 Set IP address in UR

Implement IP addresses for the computer and a B30 device as follows.

The UR family supports the use of subnetworks as documented in RFC 950, which divides class-based networks into subnetworks (non-CIDR). The classes and IP address ranges are defined as follows.

Table 3-7: IP address classes

Classes	IP address range	Default subnet mask address	UR devices
A	1.0.0.0 to 127.255.255.255	255.0.0.0	65,535 or more
B	128.0.0.0 to 191.255.255.255	255.255.0.0	255 to 65,534
C	192.0.0.0 to 223.255.255.255	255.255.255.0	0 to 254

Classes	IP address range	Default subnet mask address	UR devices
D	224.0.0.0 to 239.255.255.255	(Reserved for multicasting)	
E	240.0.0.0 to 255.255.255.255	(Reserved)	

Both network and subnet addresses are contained within a range. The number of hosts determines the class and addresses as follows:

- Class A 255.0.0.0 — The first octet (255) specifies the network, the second to fourth octets (0) specify the subnet and host. Use this class when you have more than 65,535 hosts (UR devices).
- Class B 255.255.0.0 — The first two octets (255) specify the network, the third octet (0) specifies the subnet, and the fourth octet (0) specifies the host. Use this class when you have 255 to 65,534 hosts (UR devices).
- Class C 255.255.255.0 — The first three octets (255) specify the network and the last octet (0) specifies the subnet and host. Use this class when you have up to 254 hosts (UR devices).

An example of implementation is one computer and one UR device. Because there is one UR device, class C addressing is required. So we use UR 192.167.2.x with subnet mask 255.255.255.0 and computer 192.167.3.x with subnet mask 255.255.255.0.

For older, non-CIDR routing protocols, such as RIP version 1, follow these restrictions:

- Identical subnet masks — Use a single mask for all subnets within a network
- Contiguous subnets — The subnets must be contiguous and not split among networks. The subnets cannot pass traffic through other networks.

The IP and subnet addresses need to be added to the UR for Ethernet communication.

For serial communication, for example using the front RS232 port and the Quick Connect feature, the addresses are not required, but typically they are entered to add/configure devices for regular use.

1. On the front of the B30, press the **MENU** key until the **Settings** menu displays.
2. Navigate to **Settings** ⇨ **Product Setup** ⇩⇨ **Communications** ⇩⇨ **Network** ⇨ **IP Address Setting**.
3. Enter an IP address, for example "1.1.1.1," and press the **ENTER** key to save the value.
4. In the same menu, select the **Subnet IP Mask** setting.
5. Enter a subnet IP address, for example "255.0.0.0," and press the **ENTER** key to save the value.

If using a blue or grey Ethernet cable, skip the rest of the this section. If using an orange cross-over Ethernet cable, the computer needs to be set up as follows.

1. Use an orange Ethernet cross-over cable to connect the computer to the rear Ethernet port. In case you need it, the following figure shows the pinout for an Ethernet cross-over cable.

Figure 3-61: Ethernet cross-over cable PIN layout

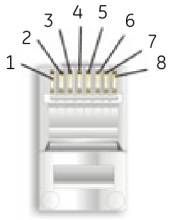

END 1		
Pin	Wire color	Diagram
1	White/orange	
2	Orange	
3	White/green	
4	Blue	
5	White/blue	
6	Green	
7	White/brown	
8	Brown	

END 2		
Pin	Wire color	Diagram
1	White/green	
2	Green	
3	White/orange	
4	Blue	
5	White/blue	
6	Orange	
7	White/brown	
8	Brown	

842799A1.CDR

Next, assign the computer an IP address compatible with the relay's IP address.

1. From the Windows desktop, right-click the **My Network Places** icon and select **Properties** to open the network

connections window. Or in Windows 7, access the **Network and Sharing Center** in the Control Panel.

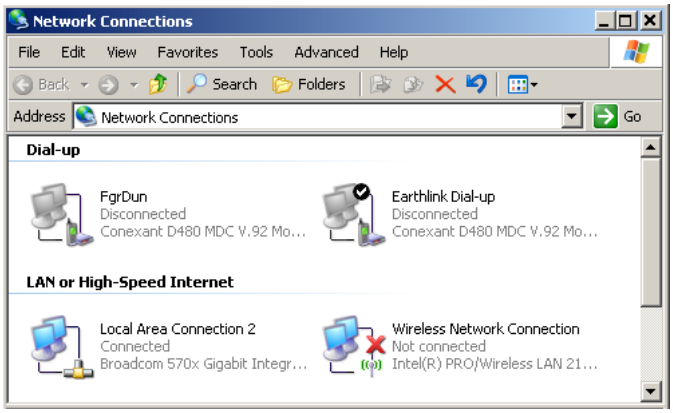

2. Right-click the **Local Area Connection** icon and select **Properties**.

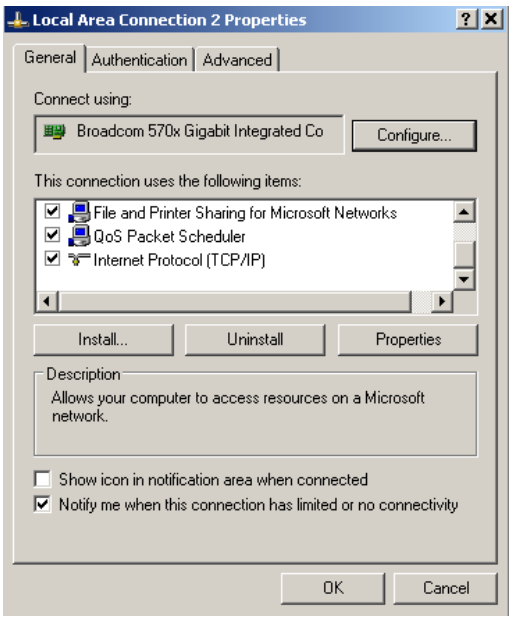

3. Select the **Internet Protocol (TCP/IP)** item from the list, and click the **Properties** button.

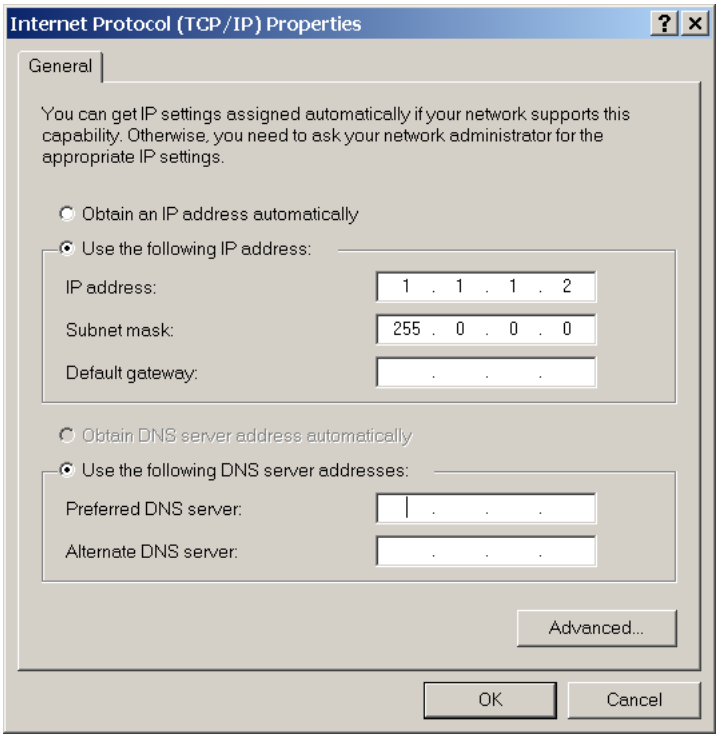

4. Click the "Use the following IP address" box.
5. Enter an **IP address** with the first three numbers the same as the IP address of the B30 relay and the last number different (in this example, 1.1.1.2).
6. Enter a subnet mask equal to the one set in the B30 (in this example, 255.0.0.0).
7. Click the **OK** button to save the values.

Before continuing, test the Ethernet connection.

1. Open a Windows console window, for example by selecting **Start > Run** from the Windows **Start** menu and typing "cmd" or clicking the **Start** button and entering "cmd".
2. Type the following command, substituting the IP address of 1.1.1.1 with yours:

```
C:\WINNT>ping 1.1.1.1
```

3. If the connection is successful, the system returns four replies similar to the following:

```
Pinging 1.1.1.1 with 32 bytes of data:
Reply from 1.1.1.1: bytes=32 time<10ms TTL=255
Reply from 1.1.1.1: bytes=32 time<10ms TTL=255
Reply from 1.1.1.1: bytes=32 time<10ms TTL=255
Reply from 1.1.1.1: bytes=32 time<10ms TTL=255
Ping statistics for 1.1.1.1:
    Packets: Sent = 4, Received = 4, Lost = 0 (0% loss),
Approximate round trip time in milliseconds:
    Minimum = 0ms, Maximum = 0ms, Average = 0 ms
```

4. Note that the values for `time` and `TTL` vary depending on local network configuration.
5. If the following sequence of messages appears when entering the `C:\WINNT>ping 1.1.1.1` command:

```
Pinging 1.1.1.1 with 32 bytes of data:
Request timed out.
Request timed out.
Request timed out.
Request timed out.
```

```
Ping statistics for 1.1.1.1:
    Packets: Sent = 4, Received = 0, Lost = 4 (100% loss),
Approximate round trip time in milliseconds:
    Minimum = 0ms, Maximum = 0ms, Average = 0 ms
Pinging 1.1.1.1 with 32 bytes of data:
```

verify the physical connection between the B30 and the computer, and double-check the programmed IP address in the **Product Setup** ⇨⇩ **Communications** ⇨⇩ **Network** ⇨ **IP Address** setting, then repeat step 2.

6. If the following sequence of messages appears when entering the `C:\WINNT>ping 1.1.1.1` command:

```
Pinging 1.1.1.1 with 32 bytes of data:
Hardware error.
Hardware error.
Hardware error.
Hardware error.
Ping statistics for 1.1.1.1:
    Packets: Sent = 4, Received = 0, Lost = 4 (100% loss),
Approximate round trip time in milliseconds:
    Minimum = 0ms, Maximum = 0ms, Average = 0 ms
Pinging 1.1.1.1 with 32 bytes of data:
```

verify the physical connection between the B30 and the computer, and double-check the programmed IP address in the **PRODUCT SETUP** ⇨⇩ **COMMUNICATIONS** ⇨⇩ **NETWORK** ⇨ **IP ADDRESS** setting, then repeat step 2.

7. If the following sequence of messages appears when entering the `C:\WINNT>ping 1.1.1.1` command:

```
Pinging 1.1.1.1 with 32 bytes of data:
Destination host unreachable.
Destination host unreachable.
Destination host unreachable.
Destination host unreachable.
Ping statistics for 1.1.1.1:
    Packets: Sent = 4, Received = 0, Lost = 4 (100% loss),
Approximate round trip time in milliseconds:
    Minimum = 0ms, Maximum = 0ms, Average = 0 ms
Pinging 1.1.1.1 with 32 bytes of data:
```

verify the IP address is programmed in the local computer by entering the ipconfig command in the command window.

```
C:\WINNT>ipconfig
Windows IP Configuration
Ethernet adapter <F4FE223E-5EB6-4BFB-9E34-1BD7BE7F59FF>:
        Connection-specific DNS suffix. . :
        IP Address. . . . . . . . . . . . : 0.0.0.0
        Subnet Mask . . . . . . . . . . . : 0.0.0.0
        Default Gateway . . . . . . . . . :
Ethernet adapter Local Area Connection:
        Connection-specific DNS suffix  . :
        IP Address. . . . . . . . . . . . : 1.1.1.2
        Subnet Mask . . . . . . . . . . . : 255.0.0.0
        Default Gateway . . . . . . . . . :
C:\WINNT>
```

Before using the Quick Connect feature through the Ethernet port, disable any configured proxy settings in Internet Explorer.

1. Start the Internet Explorer software.
2. Select the **Tools > Internet Options** menu item and click the **Connections** tab.

3. Click on the **LAN Settings** button to open the following window.

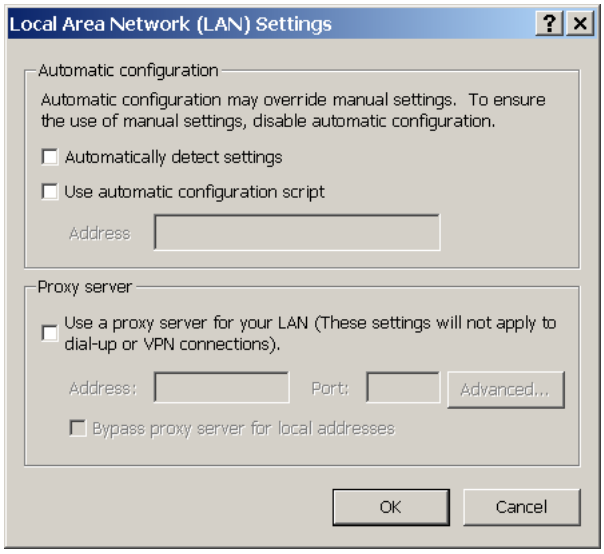

4. Ensure that the "Use a proxy server for your LAN" box is not checked.

If this computer is used to connect to the Internet, re-enable any proxy server settings after the computer has been disconnected from the B30 relay.

1. Start the Internet Explorer software.
2. Select the UR device from the EnerVista Launchpad to start EnerVista UR Setup.
3. Click the **Quick Connect** button to open the window.

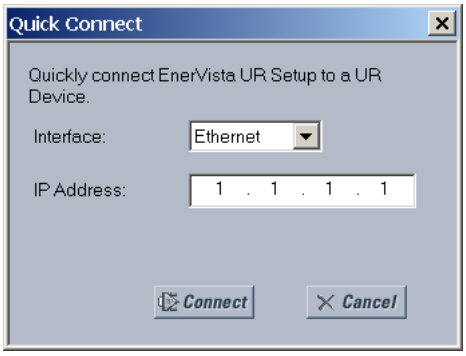

4. Select the **Ethernet** interface and enter the IP address assigned to the B30, then click the **Connect** button. The EnerVista UR Setup software creates a site named "Quick Connect" with a corresponding device also named "Quick Connect" and displays them on the left side of the screen.
5. Expand the sections to view data directly from the B30 device.

Each time that the EnerVista UR Setup software is initialized, click the **Quick Connect** button to establish direct communications to the B30. This ensures that configuration of the EnerVista UR Setup software matches the B30 model number.

When direct communications with the B30 via Ethernet is complete, make the following changes:

1. From the Windows desktop, right-click the **My Network Places** icon and select **Properties** to open the network connections window.
2. Right-click the **Local Area Connection** icon and select the **Properties** item.

3. Select the **Internet Protocol (TCP/IP)** item from the list provided and click the **Properties** button.
4. Set the computer to "Obtain a relay address automatically" as shown.

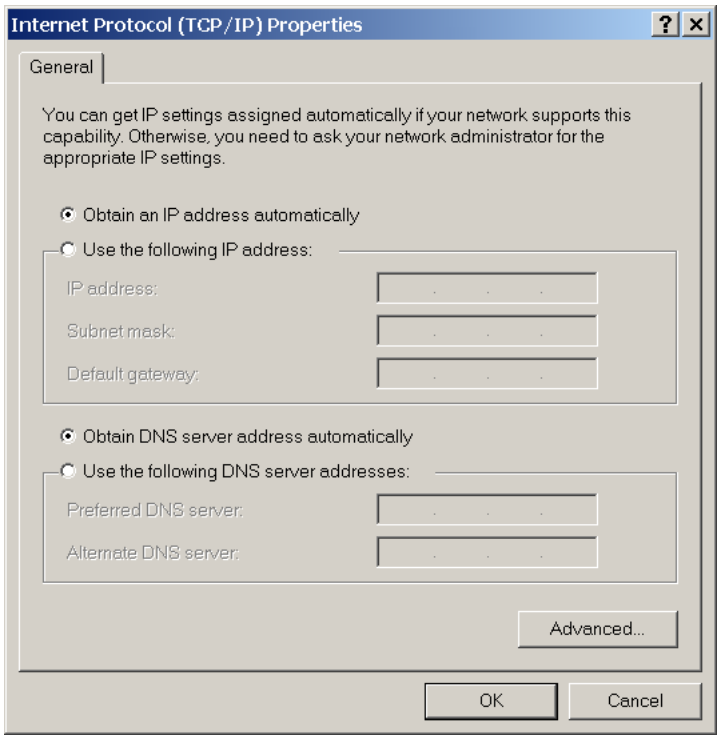

If the computer is used to connect to the Internet, re-enable any proxy server settings after the computer has been disconnected from the B30 relay.

3.7.2 Configure serial connection

Two options are possible: local connection between computer and front RS232 port, and remote connection using the rear RS485 port.

For the RS232 connection, a computer with an RS232 port and a serial cable are required.

To use the RS485 port at the back of the relay, a GE Grid Solutions F485 converter (or compatible RS232-to-RS485 converter) is required. See the F485 instruction manual for details.

1. Connect the computer to the F485 and the F485 to the RS485 terminal on the back of the UR device. Or connect the computer to the RS232 port on the front of the relay.
2. Start the EnerVista UR Setup software, or in EnerVista Launchpad select the UR device to start the software.
3. Click the **Add Site** button. A new category is added.
4. Enter a site name in the **Site Name** field. Optionally add a short **Description** of the site. This example uses "Location 1" as the site name. Click the **OK** button. The new site appears in the Online Window area.
5. Click the **Device Setup** button. The window opens.
6. Select the new site.
7. Click the **Add Device** button. A new device is added.
8. Enter a name in the **Device Name** field, up to 15 characters, and optionally add a **Description** of the site. The **Color** is for the text in the device list in the Online Window.
9. Select "Serial" from the **Interface** drop-down list. Interface parameters display that must be entered for serial communications. Try to load automatically the fields by clicking the **Read Order Code** button.

3

Figure 3-62: Configuring serial communication

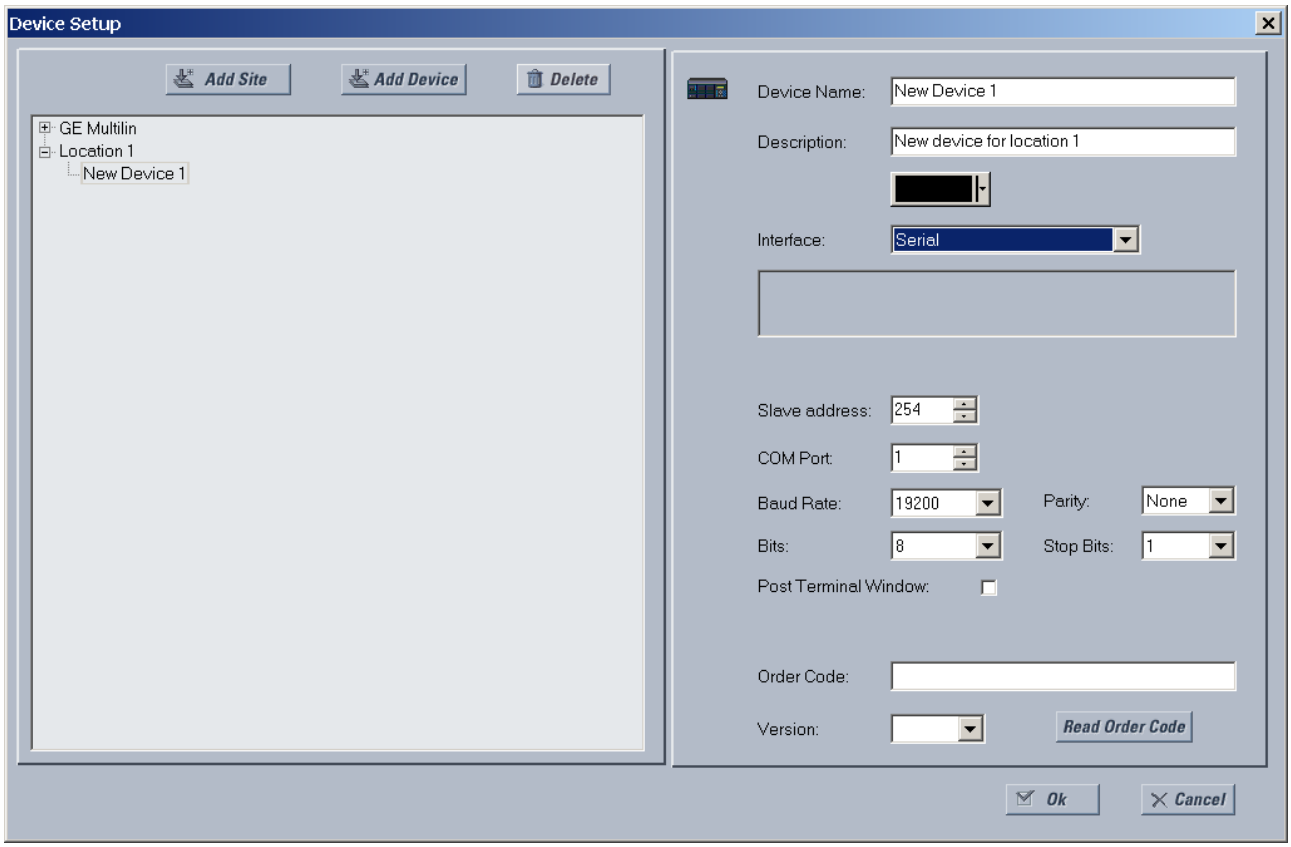

10. Enter the COM port used by the computer, the baud rate, and parity settings from the front panel **SETTINGS ⇨ PRODUCT SETUP ⇨⇩ COMMUNICATIONS ⇨ SERIAL PORTS** menu, and the relay slave address setting from the front panel **SETTINGS ⇨ PRODUCT SETUP ⇨⇩ COMMUNICATIONS ⇨⇩ MODBUS PROTOCOL ⇨ MODBUS SLAVE ADDRESS** menu in their respective fields.

    Baud Rate — Typically 19200 for RS232 and higher for RS485. Both modems need to use the same rate.

    Parity — Set to None if unsure

    Bits — Set to 8 if unsure

    Stop Bits — Set to 1 if unsure

    Post Terminal Window — Enable this option if you have a SEL-203x Communications Processor, such as an SEL-2030 or SEL-2032. This option enables display of a terminal window to allow interaction with the other device.

11. Click the **Read Order Code** button to connect to the B30 and upload the order code to the software. If a communications error occurs, ensure that the EnerVista software serial communications values entered in the previous step correspond to the relay setting values, and also ensure that the same IP address is not assigned to multiple B30 ports.
12. Click the **OK** button when the relay order code has been received. The new device is added to the Online Window.

The device has been configured for serial communications. Proceed to the Connect to the B30 section to begin communication.

3.7.3 Configure Ethernet connection

You connect the Ethernet cable, define a site in the software, then add the relay as a device for the site. The computer and UR device must be on the same subnet.

1. Connect the Ethernet network cable to the Ethernet port on the back of the device.

2. Start the EnerVista UR Setup software, or in EnerVista Launchpad select the UR device to start the software.
3. Click the **Device Setup** button. The window opens.
4. Click the **Add Site** button. A new category is added.
5. Enter a site name in the **Site Name** field. Optionally add a short **Description** of the site. This example uses "Location 1" as the site name. Click the **OK** button. The new site appears in the Online Window area.
6. Click the **Device Setup** button. The window opens.
7. Select the new site.
8. Click the **Add Device** button. A new device is added.
9. Enter a name in the **Device Name** field, up to 15 characters, and optionally add a **Description** of the site. The **Color** is for the text in the device list in the Online Window.
10. Select "Ethernet" from the **Interface** drop-down list. This displays a number of interface parameters that must be entered for Ethernet functionality.

Figure 3-63: Configuring Ethernet communication

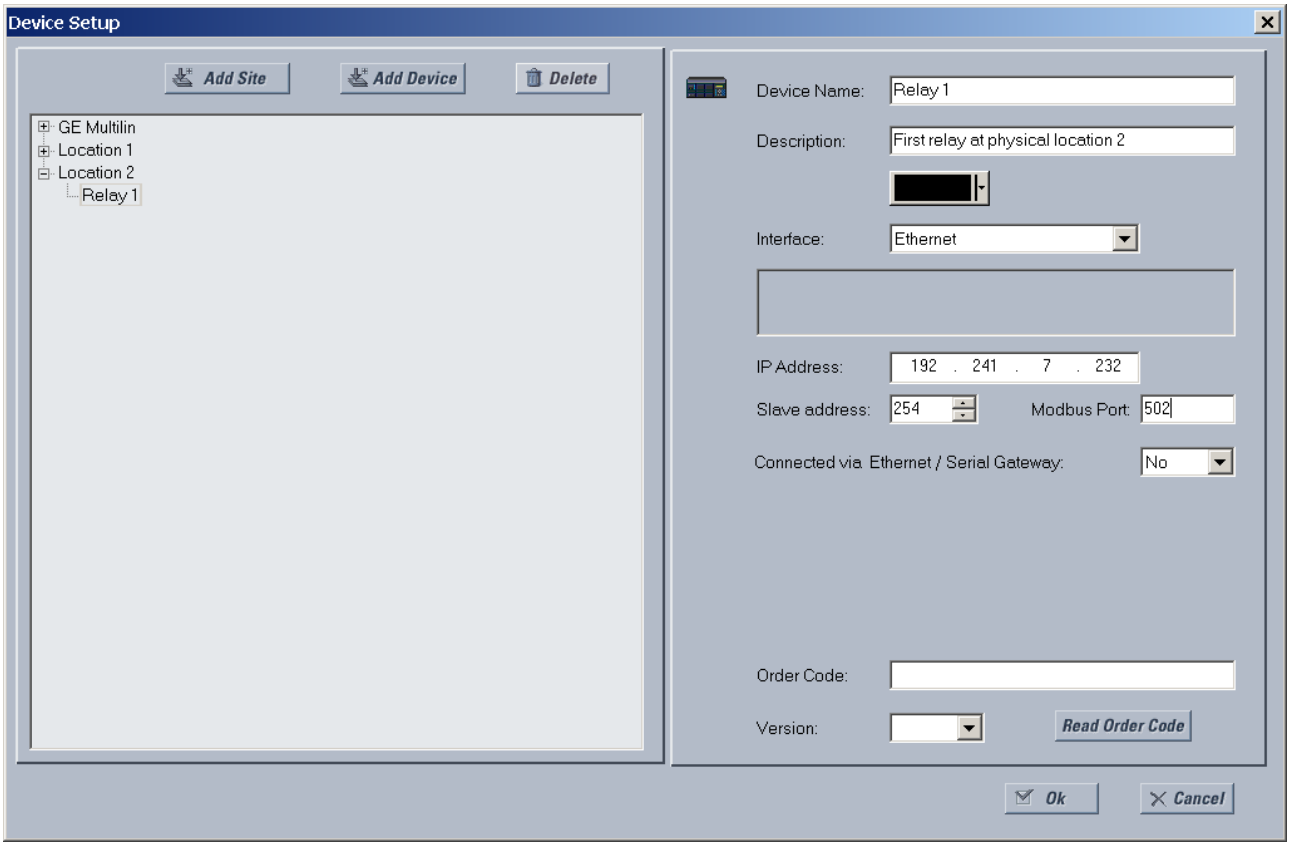

11. Enter the relay **IP Address**, which can be viewed on the device front panel under **SETTINGS ⇨ PRODUCT SETUP ⇩⇨ COMMUNICATIONS ⇩⇨ NETWORK ⇨ IP ADDRESS**. Once the IP address is entered, try to load automatically the device information by clicking the **Read Order Code** button.
12. Enter the relay **Slave address** and **Modbus Port** address values from the settings in the front panel **SETTINGS ⇨ PRODUCT SETUP ⇩⇨ COMMUNICATIONS ⇩⇨MODBUS PROTOCOL** menu.
13. If using a gateway to connect to the device, select **Yes** from the drop-down list.
14. Click the **Read Order Code** button to connect to the B30 device and upload the order code. If the device was entered already, a message displays "Device 'x' is also using IP address...." If a communications error occurs, ensure that the values entered in the previous steps correspond to the relay setting values, and also ensure that the same IP address is not assigned to multiple B30 ports.

15. Click the **OK** button when the relay order code has been received. The device is added to the Online Window.

The device has been configured for Ethernet communications. Proceed to the Connect to the B30 section to begin communications.

3.7.4 Configure modem connection

A modem connection allows a computer to communicate with a UR device over phone lines.

A remote modem is connected to the UR device, either by connecting the serial cable to the front panel port or through a RS485 box to the rear terminals of the UR device. The computer is connected to a local modem that initiates the connection.

To add a UR device for modem connections:

1. Connect the modems to the computer and UR.
2. Start the EnerVista UR Setup software, or in EnerVista Launchpad select the UR device to start the software.
3. Click the **Device Setup** button. The window opens.
4. Click the **Add Site** button. A new category is added.
5. Enter a site name in the **Site Name** field, such as London East. Optionally add a short **Description** of the site, such as the address or intersection. Click the **OK** button. The new site appears in the Online Window area.
6. Click the **Device Setup** button. The window opens.
7. Select the new site.
8. Click the **Add Device** button. A new device is added.
9. Enter a name in the **Device Name** field, up to 15 characters, and optionally add a **Description** of the site. The **Color** is for the text in the device list in the Online Window.
10. Select “Modem” from the **Interface** drop-down list. This displays a number of interface parameters that must be entered.
11. Select "Generic Modem" from the **Modem Name** drop-down list, then enter the **Phone Number** to dial to establish communication with the remote modem.

    Post Terminal Window — Enable this option if you have a SEL-203x Communications Processor, such as an SEL-2030 or SEL-2032. It enables display of a terminal window to allow interaction with the other device.
12. Once the phone number is entered, try to load automatically the device information by clicking the **Read Order Code** button.
13. Click the **OK** button when the relay order code has been received. The new device is added to the Online window.

The UR device has been added to the software.

3.7.5 Automatic discovery of UR devices

The EnerVista UR Setup software can find and communicate to all UR-family devices located on an Ethernet network.

Using the **Discover** button in the **Device Setup** window, a single click of the mouse triggers the software to detect any URs located on the network. This is done by searching a range of IP addresses based on the subnet mask of the computer. When a UR device is detected, the EnerVista UR Setup software proceeds to configure all settings and order code options in the window. This feature allows the user to identify and interrogate all UR devices at a location.

Examples of address ranges are as follows:

- If the host has an IP address of 3.94.247.10 and its subnet mask is 255.255.252.0, then the host’s subnet is 3.94.244.0, and the possible IP addresses in this subnet are 3.94.244.1~254, 3.94.245.1~254, 3.94.246.1~254 and 3.94.247.1~254. The discover function scans all those possible IP addresses to detect UR relays.
- If the host has an IP address of 3.94.247.145 and its subnet mask is 255.255.255.128, then the host’s subnet is 3.94.247.128, and the discover function scans IP addresses of 3.94.247.128 to 3.94.248.254 for UR relays

To automatically add UR devices:

1. In the EnerVista software, click the **Device Setup** button. The window opens.

2. Click the **Discover** button. The software searches for UR devices on the computer subnet and adds any found to the Online Window area. If a required device is not found, add it manually as outlined earlier.

Figure 3-64: Discover button to detect UR devices in network

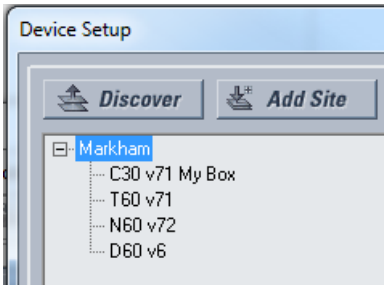

3.8 Connect to the B30

There are four ways to the connect to the device, as follows:

- RS232 port (outlined here)
- RS485 port
- Ethernet port (outlined here)
- LAN

When unable to connect because of an "ACCESS VIOLATION," access **Device Setup** and refresh the order code for the device.

When unable to connect, ensure that the same IP address is not assigned to multiple B30 ports, for example under **Settings > Product Setup > Communications > Network**.

NOTE

When multiple computers are connected to a B30 device, EnerVista settings windows are not updated automatically. They are refreshed when re-opened. If a user changes a setting on one computer, the other users need to refresh the display by closing and opening the settings window to see the change. To ensure that current settings are always viewed, close settings windows when not in use so that they are up-to-date when next accessed.

3.8.1 Connect to the B30 in EnerVista

For information on using the EnerVista software, see the Interfaces chapter.

To access the relay in EnerVista:

1. Open the **Settings > Product Setup > Display Properties** window as shown. The window opens with a status indicator on the lower left of the EnerVista UR Setup window.

3

Figure 3-65: EnerVista window

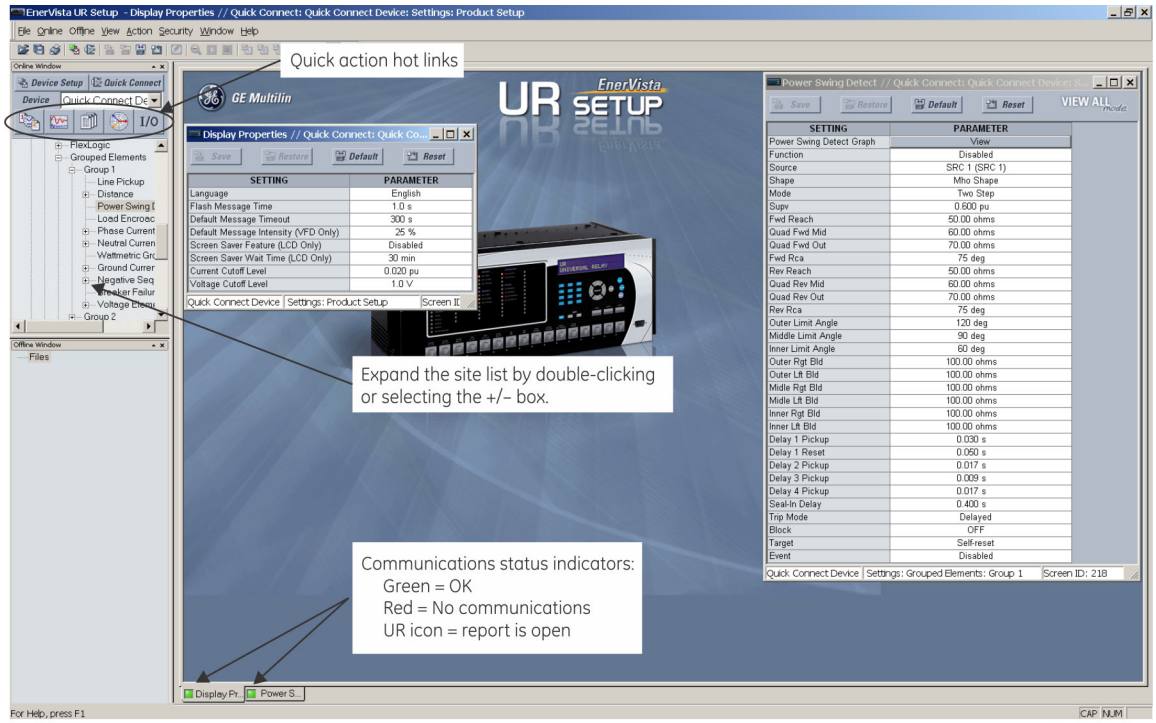

842743A3.CDR

2. If the status indicator is red, verify that the Ethernet network cable is properly connected to the Ethernet port on the back of the relay and that the relay has been properly set up for communication.
3. If a relay icon appears in place of the status indicator, then a report (such as an oscillography or event record) is open. Close the report to re-display the green status indicator.
4. The Display Properties settings can now be viewed, edited, or printed.

3.8.1.1 Quick action hot links

The EnerVista UR Setup software has several quick action buttons to provide instant access to several functions that are performed often when using URs. From the online window, users can select the relay to interrogate from a pull-down window, then click the button for the action to perform. The following quick action functions are available:

- View the event record
- View the last recorded oscillography record
- View the status of all B30 inputs and outputs
- View all of the B30 metering values
- View the B30 protection summary
- Generate a service report

3.8.2 Use Quick Connect via the front panel RS232 port

To connect to the UR from a computer using a serial cable:

1. Connect an RS232 serial cable to the computer and the front panel RS232 port.
2. Start the EnerVista UR Setup software, or in EnerVista Launchpad select the UR device to start the software.
3. Click the **Quick Connect** button to open the window.

Figure 3-66: Quick Connect window to access a device

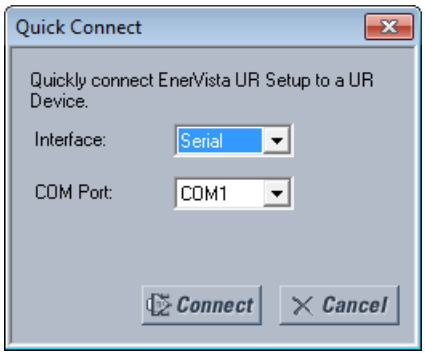

4. Select the serial **Interface** and the communications port (**COM Port**) from the drop-down lists, then click **Connect**. The COM Port is that of the computer.
5. The EnerVista software creates a site named "Quick Connect" with a corresponding device also named "Quick Connect" and displays them in the Online Window. Expand the sections to view data directly from the UR device. Use the **Device Setup** button to change the site name.

Each time that the EnerVista UR Setup software is initialized, click the **Quick Connect** button to establish direct communications to the B30. This ensures that configuration of the EnerVista UR Setup software matches the B30 model number.

3.8.3 Use Quick Connect via a rear Ethernet port

To connect to a UR using an Ethernet cable:

1. In the EnerVista software, click the **Quick Connect** button. The window opens.

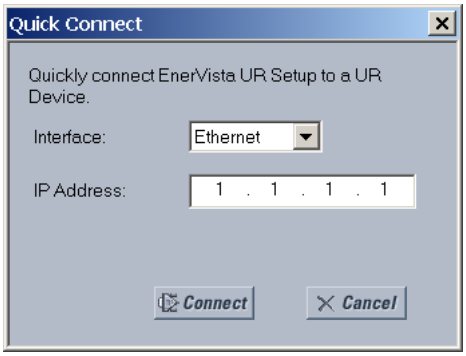

2. Select the **Ethernet** interface and enter the IP address assigned to the B30, then click the **Connect** button. The EnerVista UR Setup software creates a site named "Quick Connect" with a corresponding device also named "Quick Connect" and displays them in the Online Window.
3. Expand the sections to view data directly from the B30 device. Use the **Device Setup** button to change the site name.

Each time that the EnerVista software is initialized, click the **Quick Connect** button to establish direct communications to the B30. This ensures that configuration of the EnerVista UR Setup software matches the B30 model number.

3.9 Set up CyberSentry and change default password

If and when first using CyberSentry security, use the following procedure for set up.

1. Log in to the relay as Administrator by using the **VALUE** keys on the front panel or through EnerVista connected serially (so that no IP address is required). If logging in through EnerVista choose Device authentication (see figure). Enter the

default password "ChangeMe1#". Note that the "Lock relay" setting needs to be disabled in the **Security > Supervisory** menu. When this setting is disabled, configuration and firmware upgrade are possible. By default, this setting is disabled.

2. Enable the Supervisor role if you have a need for it.
3. Make any required changes in configuration, such as setting a valid IP address for communication over Ethernet.
4. Log out of the Administrator account by choosing None.

Next, device or server authentication can be chosen on the login screen, but the choice is available only in EnerVista. Use Device authentication to log in using the five pre-configured roles (Administrator, Supervisor, Engineer, Operator, Observer, or Administrator and Supervisor when Device authentication is disabled). When using a serial connection, only Device authentication is supported. When Server authentication is required, characteristics for communication with a RADIUS server must be configured on the UR. This is possible only through the EnerVista software. The RADIUS server itself also must be configured. At the end of this instruction manual, the appendix called RADIUS Server Configuration gives an example of how to set up a simple RADIUS server. Once both the RADIUS server and the parameters for connecting the UR to the server have been configured, you can choose Server authentication on the login screen of EnerVista.

Figure 3-67: Login screen for CyberSentry

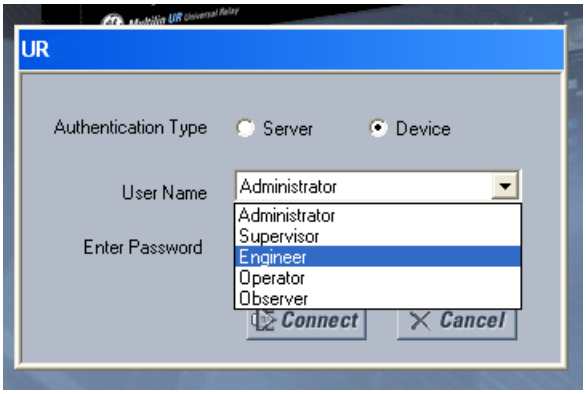

During the commissioning phase, you have the option to bypass the use of passwords. Do so by enabling the **Bypass Access** setting under **Settings > Product Setup > Security > Supervisory**. Be sure to disable this bypass setting after commissioning the device.

You can change the password for any role either from the front panel or through EnerVista. If using EnerVista, navigate to **Settings > Product Setup > Security**. Change the **Local Administrator Password**, for example. It is strongly recommended that the password for the Administrator be changed from the default. Changing the passwords for the other three roles is optional.

3.10 Import settings

The following file types can be imported:

- URS — UR settings file (firmware version7.3x or earlier)
- IID — Instantiated IED capability description file — Actual settings on UR
- CID — Configured IED description file — Settings sent to the UR (may or may not be actual settings)

The import is done in the Offline Window area.

To import a settings file:

1. In the Offline Window area, right-click the device and select the **Add Device from File** option. The device is that from which you want to import settings.
2. If required, change the **Files of type** drop-down list.
3. Select the file to import.

To apply the settings to a live device:

1. Drag-and-drop the device entry from the Offline Window area to its entry in the Online Window area.
   Individual settings also can be dragged and dropped between Online and Offline Window areas.
   The order codes must match.

B30 Bus Differential System

Chapter 4: Interfaces

This chapter explains the EnerVista software interface, the front panel interface, logic diagrams, and Engineer interface for logic design and monitoring.

4.1 EnerVista software interface

4.1.1 Introduction

The EnerVista UR Setup software provides a single facility to configure, monitor, maintain, and troubleshoot relay functions, connected over local or wide-area networks. It can be used while disconnected (offline) or connected (online) to a UR device. In offline mode, settings files can be created for eventual downloading to the device. In online mode, communication with the device is real-time.

The EnerVista UR Setup software is provided with every B30. This chapter outlines the EnerVista software interface features. The EnerVista UR Setup help file in the software also provides details for getting started and using the software interface.

4.1.2 Settings files

The EnerVista software supports the following three ways of handling changes to relay settings:

- In offline mode (relay disconnected) to create or edit relay settings files for later transfer to relays
- While connected to a relay to modify relay settings, and then save the settings to the relay
- Create/edit settings files and then write them to the relay while connected to the relay

See the back up section in the Maintenance chapter for instructions on how to create a settings file either offline or online.

Settings files are organized on the basis of file names assigned by the user. A settings file contains data pertaining to the following types of relay settings:

- Device definition
- Product setup
- System setup
- FlexLogic
- Grouped elements
- Control elements
- Inputs/outputs

- Remote resources
- Testing

Factory default values are supplied and can be restored after any changes.

The following communications settings are not transferred to the B30 with settings files:

Modbus Slave Address
Modbus TCP Port Number
RS485 COM2 Baud Rate
RS485 COM2 Parity
COM2 Minimum Response Time
COM2 Selection
RRTD Slave Address
RRTD Baud Rate
IP Address
IP Subnet Mask
IP Routing

When a settings file is loaded to a B30 that is in-service, the following sequence occurs:

1. The B30 takes itself out of service.
2. The B30 issues a UNIT NOT PROGRAMMED major self-test error.
3. The B30 closes the critical fail contact.

The Maintenance chapter outlines how to use a settings file in the .urs format for backup and restore.

4.1.3 Event viewing

While the interface is in online or offline mode, you can view and analyze data generated by triggered parameters as follows:

- **Event recorder** — The event recorder captures contextual data associated with the last 1024 events, listed chronologically from most recent to oldest
- **Oscillography** — The oscillography waveform traces and digital states are used to provide a visual display of power system and relay operation data captured during specific triggered events

Event records are viewable at software and device-specific levels. Access the former under **Admin > Event Log > View**. Access the latter under **Actual Values > Records > Event Record**.

Event record entries for CyberSentry are explained in the next chapter. The following table outlines some software-level entries.

Table 4-1: Event record descriptions

Event	Description
EnerVista UR Setup SESSION STARTED	The EnerVista software was launched
Language was changed.	The user changed the software language using the **View > Language** menu item
DEFAULT USERS CREATED	The user management window was launched using the **Admin > User Management** menu item
: Successful upload of firmware END Firmware verified Firmware uploaded Firmware erased START: Upload new firmware	The firmware on a device was upgraded
EnerVista UR Setup EVENT LOG CLEARED	The event record was cleared. All event records were deleted using the **Admin > Event Log > Clear** menu item.

4.1.4 File support

The following support applies, where the Settings List is at the bottom left and the Site List is at the top left of the EnerVista window:

- **Execution** — Any EnerVista UR Setup file that is opened launches the application or provides focus to the already opened application. If the file was a settings file (has a .urs extension) that had been removed from the Settings List navigation menu, it is added back to the menu.
- **Drag and Drop** — The device settings and individual settings can be dragged and dropped between the Online and Offline Window areas. Also, any Windows Explorer directory folder is a file drag source and drop target.

  New files that are dropped into the Offline Window are added to the tree, which is automatically sorted alphabetically with respect to settings file names. In the Online Window, files or individual menu items that are dropped in the selected device menu are sent automatically to the online device.

4.1.5 EnerVista main window

The EnerVista UR Setup software window has the following components:

1. Title bar that shows the pathname of the active data view or the name of the software
2. Main window menu bar
3. Main window tool bar
4. Site list / online window area
5. Settings list / offline window area
6. Software windows, with common tool bar
7. Settings file data view windows, with common tool bar
8. Workspace area with data view tabs
9. Status bar
10. Quick action hot links

Figure 4-1: EnerVista UR Setup software window

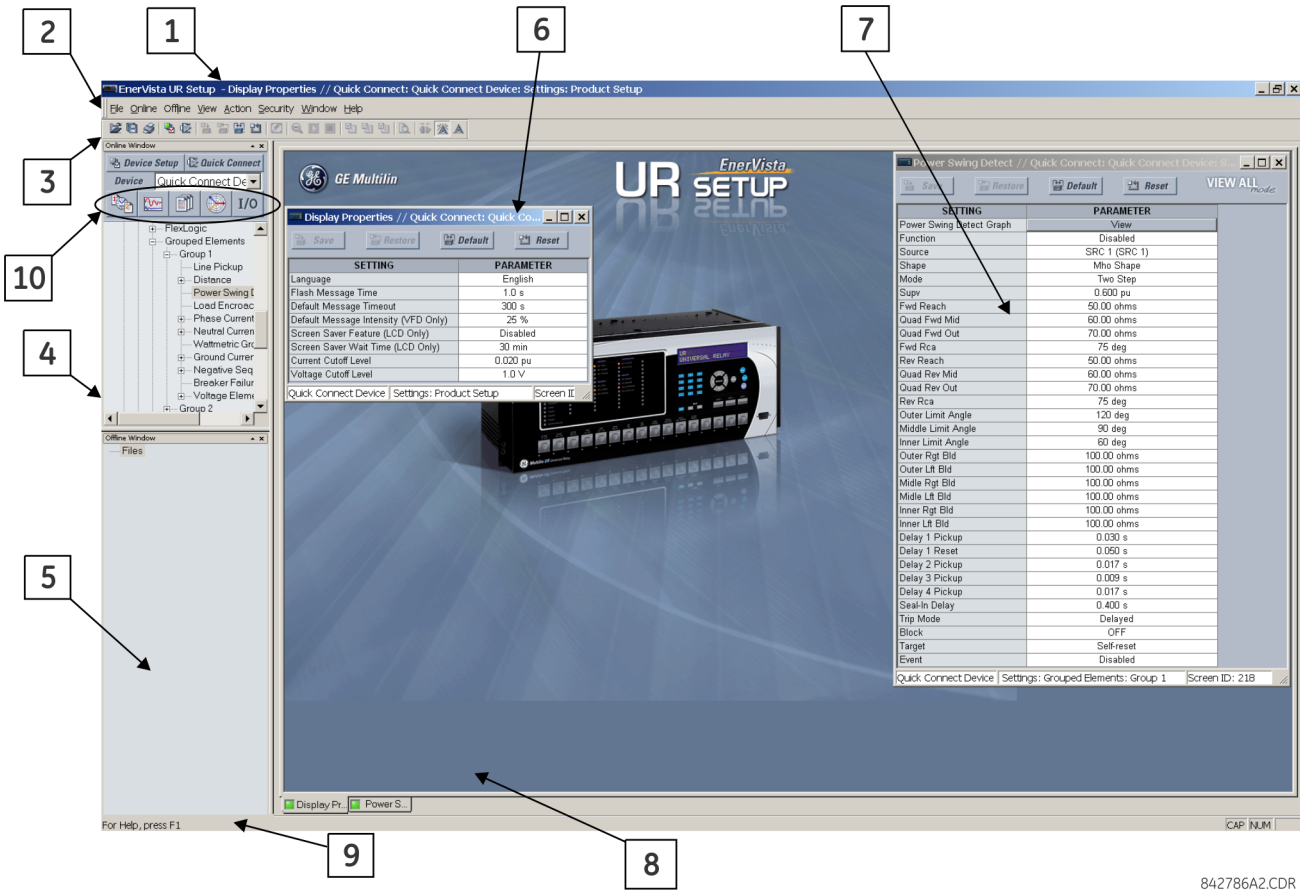

4.1.6 Protection summary window

The Protection Summary is a graphical user interface to manage elements, such as enabling and disabling them. Access it under **Settings > Protection Summary**. See the Settings chapter for information on use.

Figure 4-2: Protection Summary interface (B30 example shown)

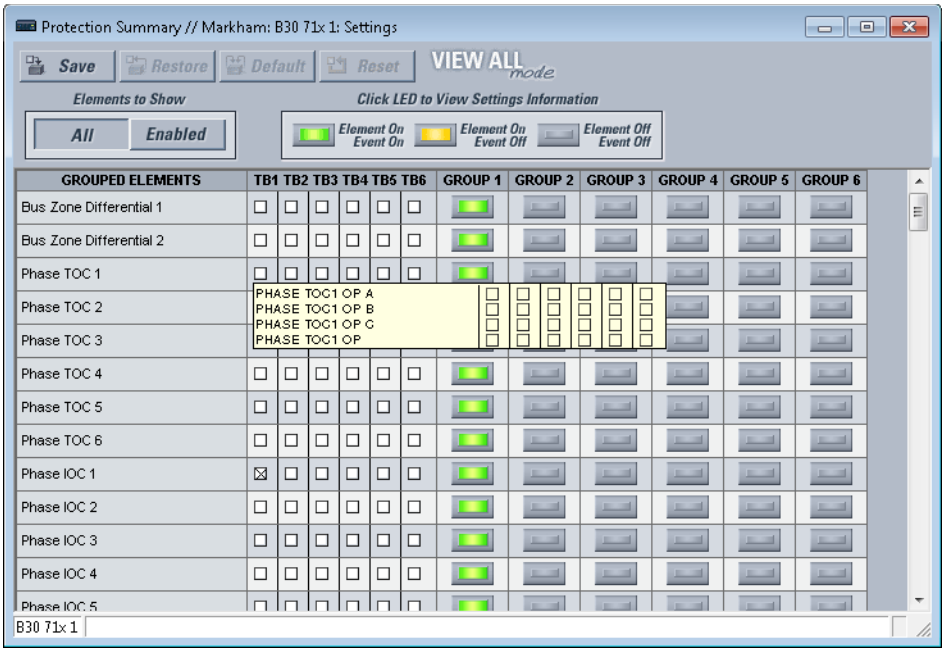

4.1.7 Settings templates

Settings file templates simplify the configuration and commissioning of multiple relays that protect similar assets. An example is a substation that has 10 similar feeders protected by 10 UR F60 relays.

In these situations, typically 90% or greater of the settings are identical among devices. The templates allow engineers to configure and test these common settings, then lock them so that they are not available to users. For example, locked settings can be hidden from view for field engineers, allowing them to quickly identify and concentrate on specific settings.

The remaining settings (typically 10% or less) can be specified as editable and made available to field engineers installing the devices. These are settings such as protection element pickup values and CT and VT ratios.

The settings template mode allows the user to define which settings are visible in the software. Settings templates can be applied to both settings files (settings file templates) and online devices (online settings templates). The functionality is identical for both purposes.

NOTE

Template mode is available in English only.

Settings file conversion from previous firmware versions is supported.

4.1.7.1 Enable the settings template

The settings file template feature is disabled by default. It can be enabled in offline or online mode.

The procedure outlines how to enable in offline mode the settings template for UR settings files.

1. Locate the settings file from the Offline Window area of the EnerVista UR Setup software. If not there, a file can be added from an online device by right-clicking it and selecting the **Add Device to Offline Window** option.
2. In the Offline Window area, right-click the selected device or settings file and select the **Template Mode > Create Template** option.

   The settings file template is now enabled and the file menus display in light blue. A message displays. The settings file is now in template editing mode. To undo the action, select **Template Mode > Remove Template**.

Alternatively, the settings template can be applied to online settings, as follows.

1. Locate the device in the Online Window area of the EnerVista UR Setup software.
2. Right-click the device and select the **Template Mode > Create Template** option. The software prompts for a template password. This password is required to use the template feature and must be at least four characters in length.

Figure 4-3: Entering a settings file password

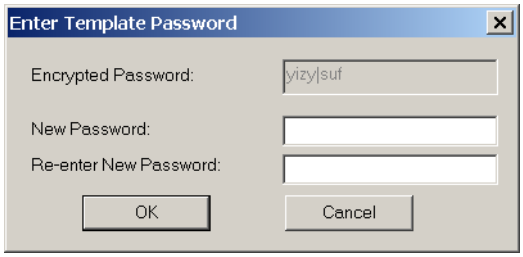

3. Enter and re-enter the new password, then click **OK** to continue.

   The online settings template is now enabled. The device is now in template editing mode.

4

4.1.7.2 Edit the settings template

The settings template editing feature allows the user to specify which settings are available for viewing and modification in EnerVista UR Setup. By default, all settings except the FlexLogic equation editor settings are locked.

1. With the template already enabled, locate the device or settings file in the Online or Offline Window area in the software.
2. Right-click the device or file and select the **Template Mode > Edit Template** option to place the device in template editing mode. If prompted, enter the template password then click **OK**.
3. Open the relevant settings window that contains settings to be specified as viewable.

   By default, all settings are specified as locked and displayed against a grey background. The icon on the upper right of the settings window also indicates that the EnerVista software is in **EDIT mode**. The following example shows the phase time overcurrent settings window in edit mode.

Figure 4-4: Settings template with all settings specified as locked

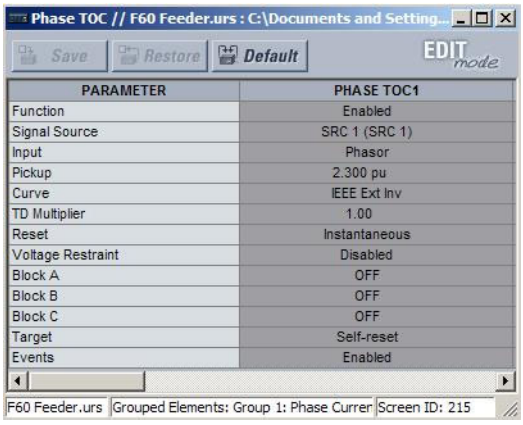

PARAMETER	PHASE TOC1
Function	Enabled
Signal Source	SRC 1 (SRC 1)
Input	Phasor
Pickup	2.300 pu
Curve	IEEE Ext Inv
TD Multiplier	1.00
Reset	Instantaneous
Voltage Restraint	Disabled
Block A	OFF
Block B	OFF
Block C	OFF
Target	Self-reset
Events	Enabled

4. Specify the settings to make viewable by clicking them.

   A setting available to view is displayed against a yellow background.

Figure 4-5: Settings template with two settings specified as editable

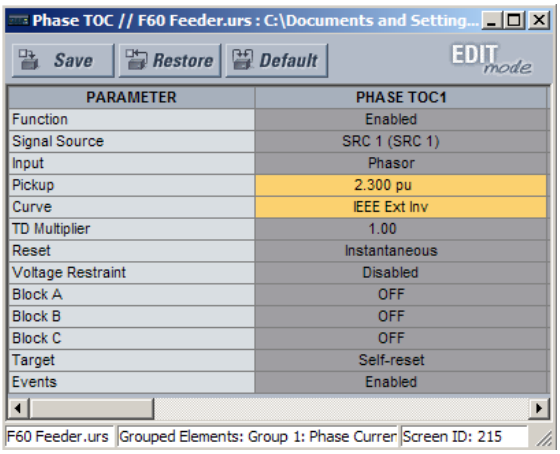

5. Click the **Save** button to save changes to the settings template.
6. Continue through any other settings window to specify all viewable settings.

   The next time that the device/settings are accessed, only those specified as viewable/editable display in the menu hierarchy.

4

4.1.7.3 Add password protection to a template

GE recommends that templates be saved with password protection to maximize security.

NOTE

When templates are created for online settings, the password is added during the initial template creation step. It does not need to be added after the template is created.

To add password protection to a settings file template:

1. In the Offline Window area, right-click the device and select the **Template Mode > Password Protect Template** option.

   The software prompts for a template password. This password must be at least four characters in length.

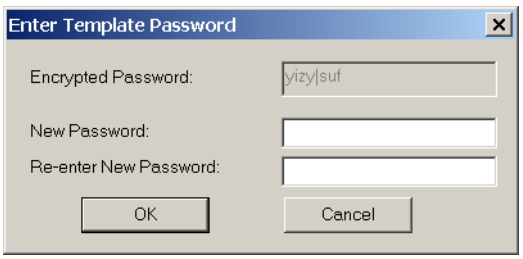

2. Enter and re-enter the new password, then click **OK** to continue.

The settings file template is now secured with password protection.

4.1.7.4 View the settings template

Once all necessary settings are specified for viewing, users are able to view the settings template on the online device or settings file. There are two ways to specify the settings view with the settings template feature:

- Display only those settings available for editing
- Display all settings, with settings not available for editing greyed-out

To display only the settings available for editing:

1. Right-click the device in the Online or Offline Window area and apply the template by selecting the **Template Mode >**

View In Template Mode option.

2. Enter the template password then click **OK** to apply the template.

Once the template has been applied, users are limited to view and edit the settings specified by the template. The effect of applying the template to the phase time overcurrent settings is shown.

Figure 4-6: Applying templates using the View in Template Mode command

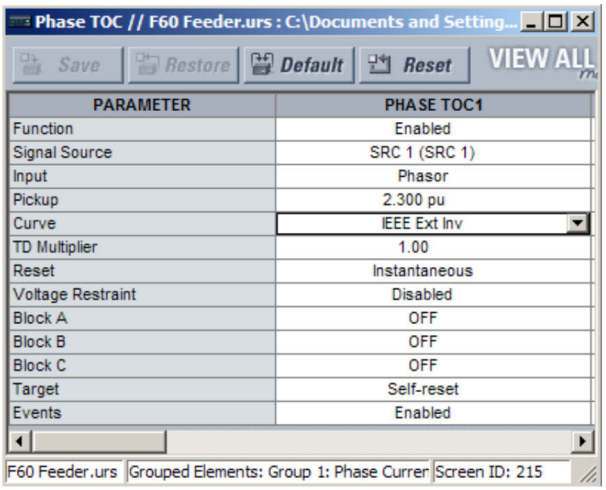

Phase time overcurrent settings window without template applied.

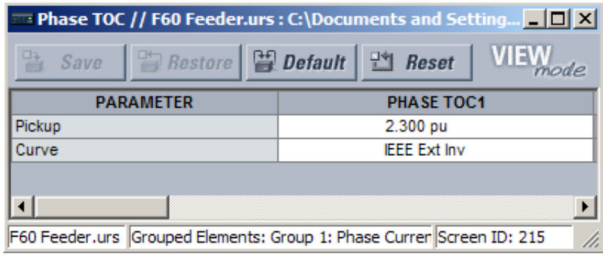

Phase time overcurrent window with template applied via the **Template Mode > View In Template Mode** command. The template specifies that only the Pickup and Curve settings be available.

842858A1.CDR

Viewing the settings in template mode also modifies the settings menu, showing only the settings categories that contain editable settings. The effect of applying the template to a typical settings menu is shown as follows.

Figure 4-7: Applying templates using the View in Template Mode settings command

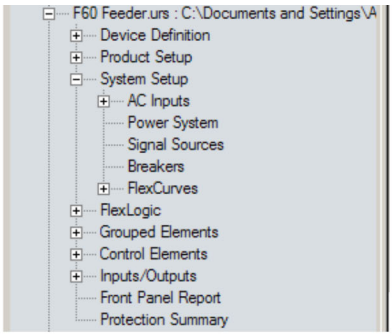

Typical settings tree view without template applied.

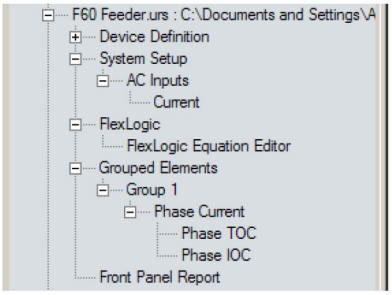

Typical settings tree view with template applied via the **Template Mode > View In Template Mode** command.

842860A1.CDR

Use the following procedure to display settings available for editing and settings locked by the template.

1. Right-click the device in the Online or Offline Window area and apply the template by selecting the **Template Mode > View All Settings** option.
2. Enter the template password then click **OK** to apply the template.

Once the template has been applied, users are limited to edit the settings specified by the template, but all settings are shown. The effect of applying the template to the phase time overcurrent settings is shown as follows.

Figure 4-8: Applying templates using the View All Settings command

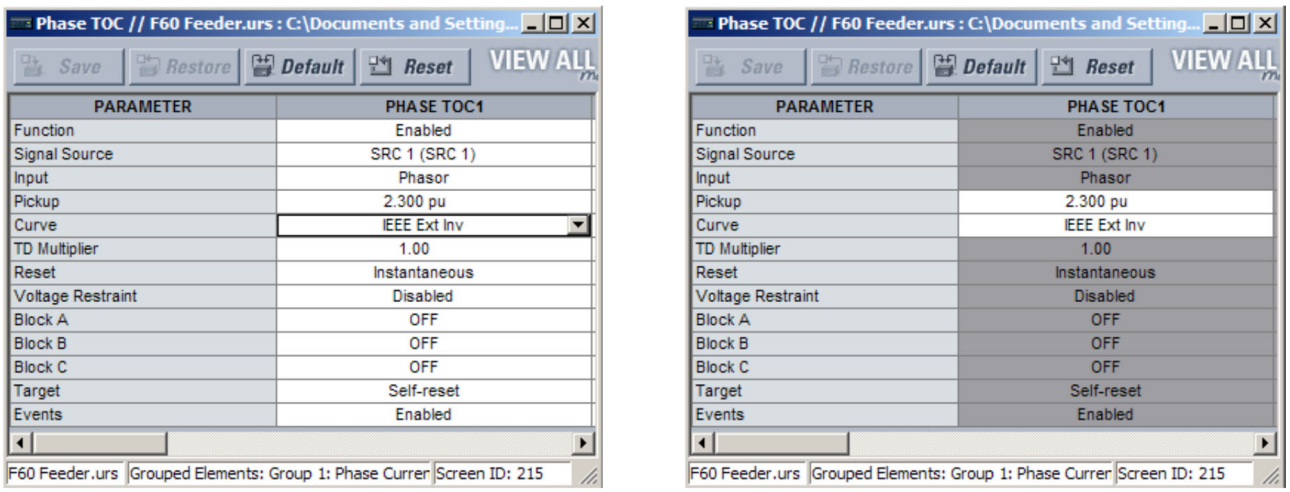

Phase time overcurrent settings window without template applied.

Phase time overcurrent window with template applied via the **Template Mode > View All Settings** command. The template specifies that only the Pickup and Curve settings be available.

842859A1.CDR

4.1.7.5 Remove the settings template

Once a settings template is removed, it cannot be reapplied and a new settings template needs to be defined before use.

1. Right-click the device in the Online or Offline Window area and select the **Template Mode > Remove Template** option.
2. Enter the template password and click **OK** to continue.
3. Confirm that you want to remove the template by clicking **Yes**.

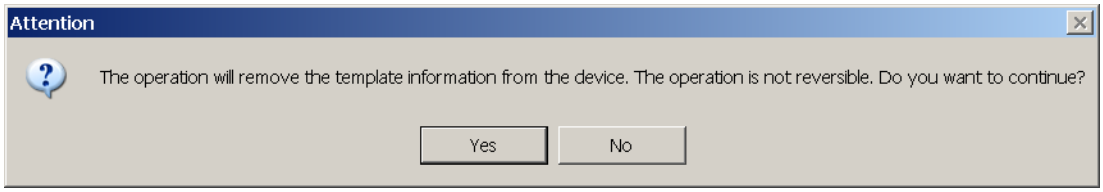

The EnerVista software removes all template information and all settings are available.

4.1.8 Secure and lock FlexLogic equations

The UR allows users to secure parts or all of a FlexLogic equation, preventing unauthorized viewing or modification of critical FlexLogic applications. This is accomplished using the settings template feature to lock individual entries within FlexLogic equations.

Secured FlexLogic equations remain secure when files are sent to and retrieved from any UR-series device.

Locking can be tied to the serial number too.

4.1.8.1 Lock FlexLogic equations

To lock individual entries of a FlexLogic equation:

1. Right-click the settings file or online device and select the **Template Mode > Create Template** item to enable the settings template feature.
2. If prompted, enter the template password.
3. Select the **FlexLogic > FlexLogic Equation Editor** settings menu item.

By default, all FlexLogic entries are specified as viewable and displayed against a yellow background. The icon on the upper right of the window also indicates that EnerVista UR Setup is in **EDIT mode**.

4. Specify the entries to lock by clicking them.

   The locked entries display against a grey background as shown in the example.

Figure 4-9: Locking FlexLogic equation entries in Edit Mode

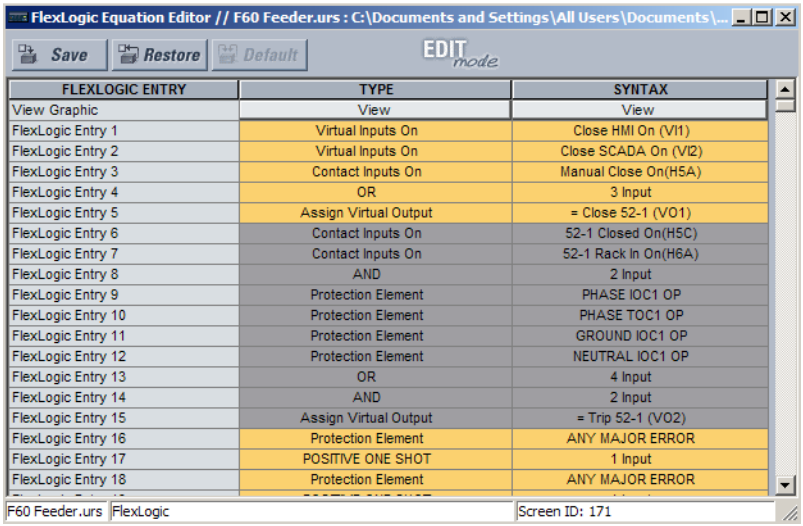

FLEXLOGIC ENTRY	TYPE	SYNTAX
View Graphic	View	View
FlexLogic Entry 1	Virtual Inputs On	Close HMI On (VI1)
FlexLogic Entry 2	Virtual Inputs On	Close SCADA On (VI2)
FlexLogic Entry 3	Contact Inputs On	Manual Close On(H5A)
FlexLogic Entry 4	OR	3 Input
FlexLogic Entry 5	Assign Virtual Output	= Close 52-1 (VO1)
FlexLogic Entry 6	Contact Inputs On	52-1 Closed On(H5C)
FlexLogic Entry 7	Contact Inputs On	52-1 Rack In On(H6A)
FlexLogic Entry 8	AND	2 Input
FlexLogic Entry 9	Protection Element	PHASE IOC1 OP
FlexLogic Entry 10	Protection Element	PHASE TOC1 OP
FlexLogic Entry 11	Protection Element	GROUND IOC1 OP
FlexLogic Entry 12	Protection Element	NEUTRAL IOC1 OP
FlexLogic Entry 13	OR	4 Input
FlexLogic Entry 14	AND	2 Input
FlexLogic Entry 15	Assign Virtual Output	= Trip 52-1 (VO2)
FlexLogic Entry 16	Protection Element	ANY MAJOR ERROR
FlexLogic Entry 17	POSITIVE ONE SHOT	1 Input
FlexLogic Entry 18	Protection Element	ANY MAJOR ERROR

5. Click the **Save** button to save and apply changes to the settings template.
6. Select the **Template Mode > View In Template Mode** option to view the template.
7. Optionally apply a password to the template by right-clicking the device and selecting the **Template Mode > Password Protect Template** option.

Once the template has been applied, users are limited to view and edit the FlexLogic entries not locked by the template. The effect of applying the template to the FlexLogic entries is shown here.

Figure 4-10: Locking FlexLogic entries through settings templates

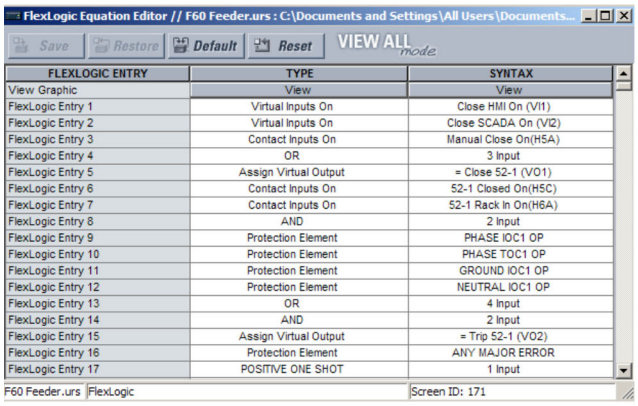

FLEXLOGIC ENTRY	TYPE	SYNTAX
View Graphic	View	View
FlexLogic Entry 1	Virtual Inputs On	Close HMI On (VI1)
FlexLogic Entry 2	Virtual Inputs On	Close SCADA On (VI2)
FlexLogic Entry 3	Contact Inputs On	Manual Close On(H5A)
FlexLogic Entry 4	OR	3 Input
FlexLogic Entry 5	Assign Virtual Output	= Close 52-1 (VO1)
FlexLogic Entry 6	Contact Inputs On	52-1 Closed On(H5C)
FlexLogic Entry 7	Contact Inputs On	52-1 Rack In On(H6A)
FlexLogic Entry 8	AND	2 Input
FlexLogic Entry 9	Protection Element	PHASE IOC1 OP
FlexLogic Entry 10	Protection Element	PHASE TOC1 OP
FlexLogic Entry 11	Protection Element	GROUND IOC1 OP
FlexLogic Entry 12	Protection Element	NEUTRAL IOC1 OP
FlexLogic Entry 13	OR	4 Input
FlexLogic Entry 14	AND	2 Input
FlexLogic Entry 15	Assign Virtual Output	= Trip 52-1 (VO2)
FlexLogic Entry 16	Protection Element	ANY MAJOR ERROR
FlexLogic Entry 17	POSITIVE ONE SHOT	1 Input

Typical FlexLogic™ entries without template applied.

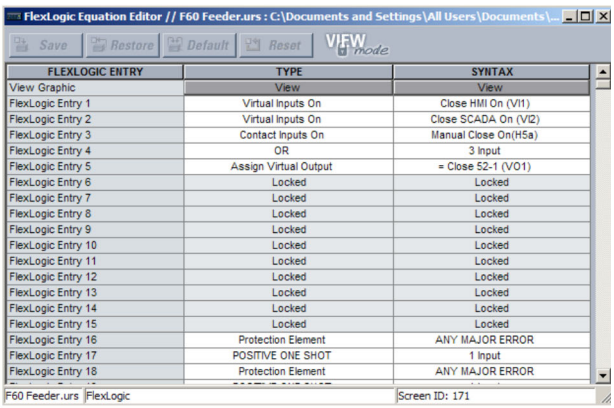

FLEXLOGIC ENTRY	TYPE	SYNTAX
View Graphic	View	View
FlexLogic Entry 1	Virtual Inputs On	Close HMI On (VI1)
FlexLogic Entry 2	Virtual Inputs On	Close SCADA On (VI2)
FlexLogic Entry 3	Contact Inputs On	Manual Close On(H5a)
FlexLogic Entry 4	OR	3 Input
FlexLogic Entry 5	Assign Virtual Output	= Close 52-1 (VO1)
FlexLogic Entry 6	Locked	Locked
FlexLogic Entry 7	Locked	Locked
FlexLogic Entry 8	Locked	Locked
FlexLogic Entry 9	Locked	Locked
FlexLogic Entry 10	Locked	Locked
FlexLogic Entry 11	Locked	Locked
FlexLogic Entry 12	Locked	Locked
FlexLogic Entry 13	Locked	Locked
FlexLogic Entry 14	Locked	Locked
FlexLogic Entry 15	Locked	Locked
FlexLogic Entry 16	Protection Element	ANY MAJOR ERROR
FlexLogic Entry 17	POSITIVE ONE SHOT	1 Input
FlexLogic Entry 18	Protection Element	ANY MAJOR ERROR

Typical FlexLogic™ entries locked with template via the **Template Mode > View In Template Mode** command.

842861A1.CDF

The FlexLogic entries are also shown as locked in the graphical view and on the front panel display.

Figure 4-11: Secured FlexLogic in graphical view

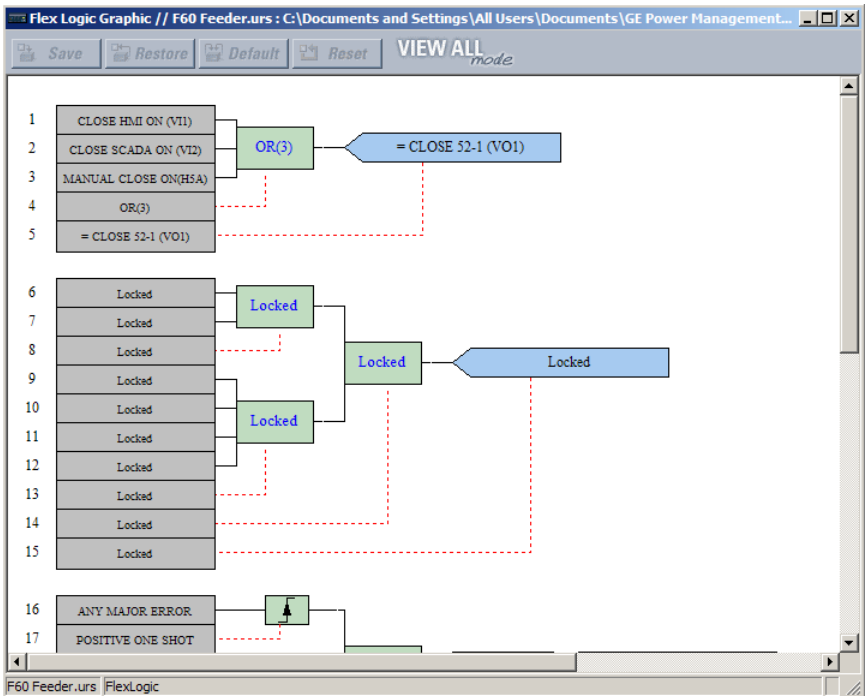

4.1.8.2 Lock FlexLogic equations to the serial number

A settings file and associated FlexLogic equations also can be locked to a UR serial number. Once FlexLogic entries in a settings file have been secured, use the following procedure to lock the settings file to a serial number. A serial number is viewable under **Actual Values > Product Info > Model Information**, the inside front panel, and the rear of the device.

1. Right-click the setting file in the Offline Window area and select the **Edit Device Properties** item. The window opens.

Figure 4-12: Settings file properties window

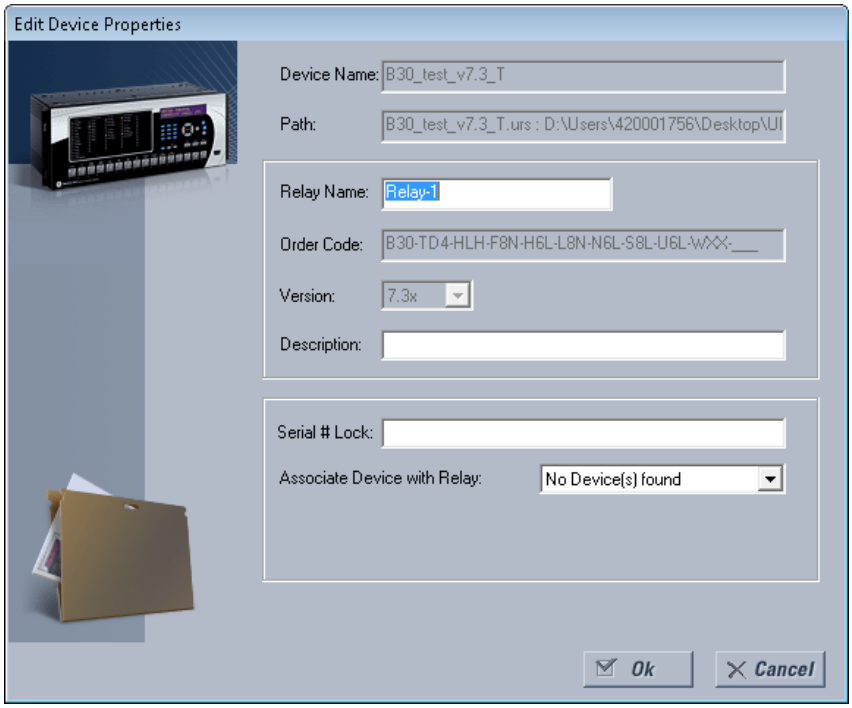

2. Enter the serial number of the B30 device to lock to the settings file in the **Serial # Lock** field.
3. Click the **OK** button to apply the change. The serial number is not validated.

The settings file and corresponding secure FlexLogic equations are now locked to the B30 device specified by the serial number.

4.1.9 Settings file traceability

A traceability feature for settings files allows the user to quickly determine if the settings in a B30 device have been changed since the time of installation from a settings file. When a settings file is transferred to a B30 device, the date, time, and serial number of the B30 are sent back to EnerVista UR Setup and added to the settings file on the local computer. This information can be compared with the B30 actual values at any later date to determine if security has been compromised.

The traceability information is only included in the settings file if a complete settings file is either transferred to the B30 device or obtained from the B30 device. Any partial settings transfers by way of drag and drop do not add the traceability information to the settings file.

Figure 4-13: Settings file traceability

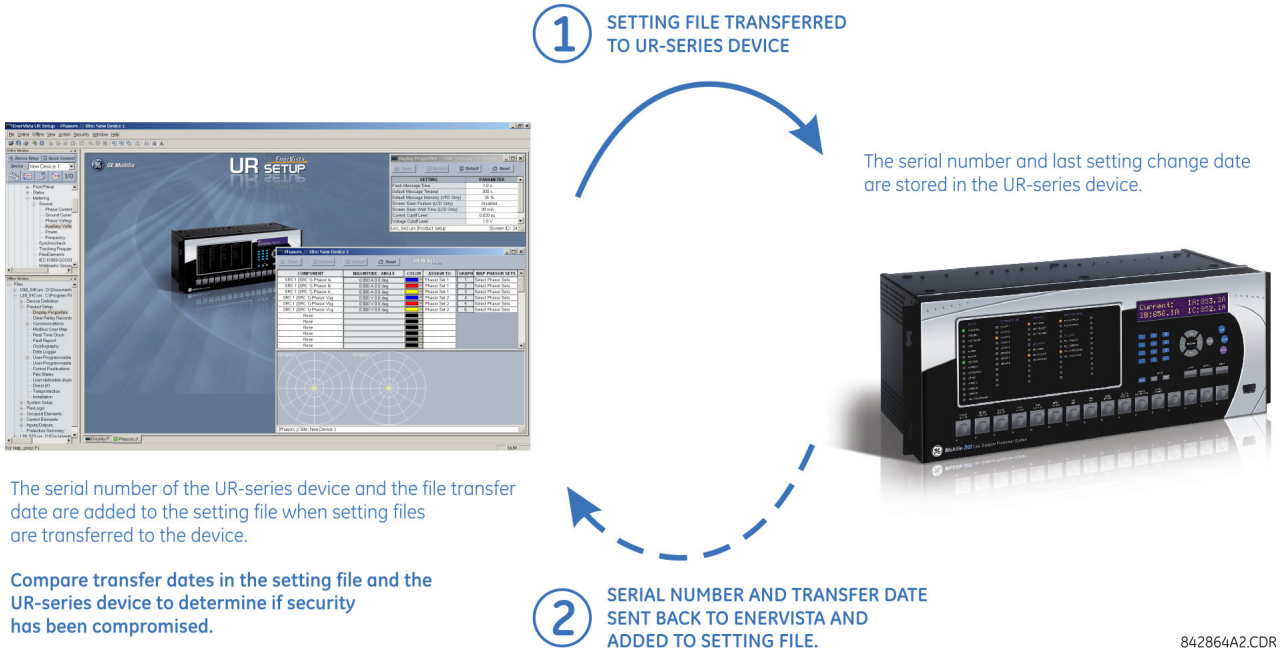

With respect to the figure, the traceability feature is used as follows.

1. The transfer date of a settings file written to a B30 is logged in the relay and can be viewed in the EnerVista software or the front panel display. Likewise, the transfer date of a settings file saved to a local computer is logged in the EnerVista software.
2. Comparing the dates stored in the relay and on the settings file at any time in the future indicates if any changes have been made to the relay configuration since the settings file was saved.

4.1.9.1 Settings file traceability information

The serial number and file transfer date are saved in the settings files when they are sent to a B30 device.

The B30 serial number and file transfer date are included in the settings file device definition within the EnerVista UR Setup offline window as shown in the example.

Figure 4-14: Device definition showing traceability data

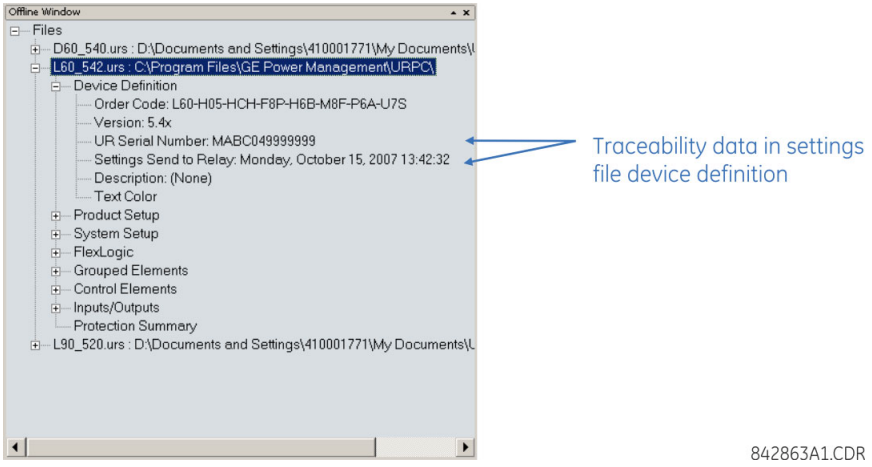

This information is also available in printed settings file reports as shown in the example. A report is generated by right-clicking and selecting the **Print Settings** option.

Figure 4-15: Settings file report showing traceability data

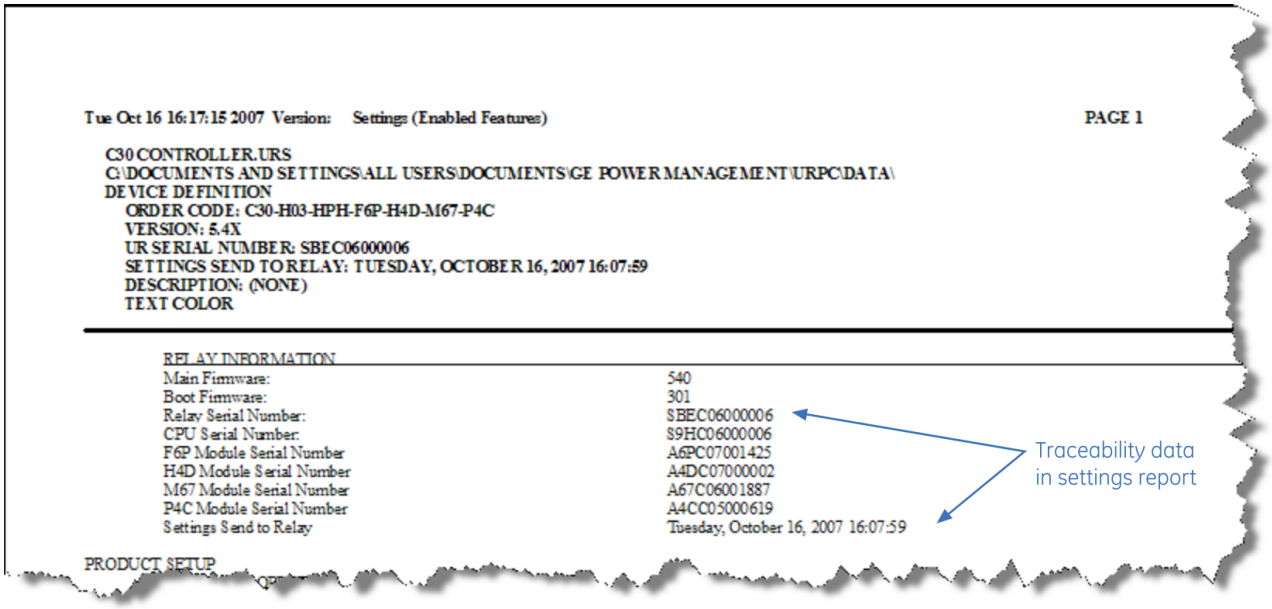

4.1.9.2 Online device traceability information

The B30 serial number and file transfer date are available for an online device through the actual values. Select the **Actual Values > Product Info > Model Information** menu item within the EnerVista online window as shown in the example.

Figure 4-16: Traceability data in Actual Values window

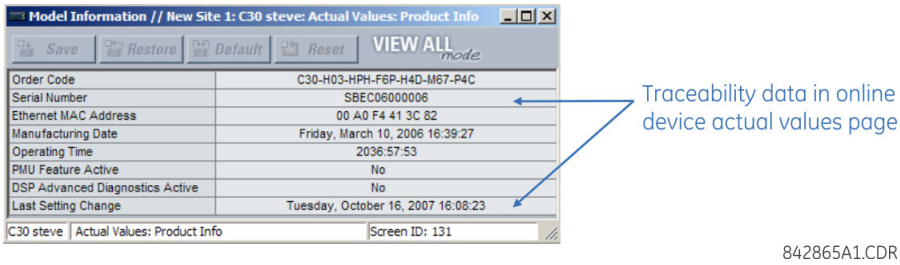

This information is also available from the front panel display through the following actual values:

ACTUAL VALUES ⇨⇩ PRODUCT INFO ⇨ MODEL INFORMATION ⇨⇩ SERIAL NUMBER

ACTUAL VALUES ⇨⇩ PRODUCT INFO ⇨ MODEL INFORMATION ⇨⇩ LAST SETTING CHANGE

4.1.9.3 Additional traceability rules

The following additional rules apply for the traceability feature:

- If the user changes any settings within the settings file in the offline window, then the traceability information is removed from the settings file
- If the user creates a new settings file, then no traceability information is included in the settings file
- If the user converts an existing settings file to another revision, then any existing traceability information is removed from the settings file
- If the user duplicates an existing settings file, then any traceability information is transferred to the duplicate settings file

4.2 Front panel interface

This section explains use of the front panel, including how to customize the labels.

4.2.1 Front panel display

Messages display on a backlit liquid crystal display (LCD) to make them visible under poor lighting conditions. When the keypad and display are not actively being used, the display defaults to user-defined messages. Any high-priority event-driven message overrides the default messages and displays.

Settings files conversion from previous firmware versions is supported.

Up to 20 characters can be used to configure some setting names in the software, while up to 12 characters display on the front panel. A tilde ~ symbol is used for the twelfth character on the front panel when a name extends beyond the 12 character limit. An example is shown for a Virtual Input.

Figure 4-17: Tilde symbols displays with names 12 or more characters long

The front panel can be viewed and used in the EnerVista software, for example to view an error message displayed on the front panel.

To view the front panel in EnerVista software:

1. Click **Actual Values > Front Panel**.

Figure 4-18: Front panel use in the software (C60 shown)

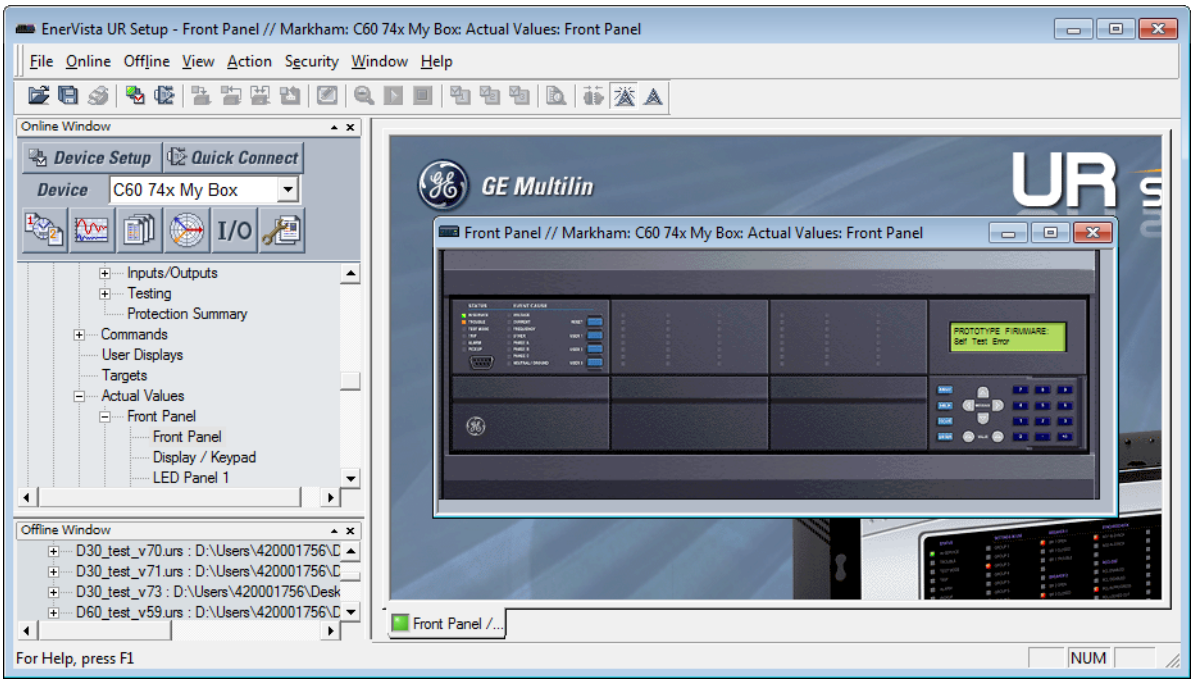

4.2.2 Front panel keypad

Display messages are organized into pages under the following headings: actual values, settings, commands, and targets. The **MENU** key navigates through these pages. Each heading page is divided further into further submenus.

The **MESSAGE** keys navigate through the submenus. The **VALUE** keys increment or decrement numerical setting values when in programming mode. These keys also scroll through alphanumeric values in the text edit mode. Alternatively, values can be entered with the numeric keypad.

The decimal key initiates and advances to the next character in text edit mode or enters a decimal point.

The **HELP** key can be pressed at any time for context-sensitive help messages.

The **ENTER** key stores setting values.

When entering an IP address on the front panel, key in the first sequence of the number, then press the • key for the decimal place. For example, for 127.0.0.1, press 127, then •, then 0, then •, then 0, then •, then 1. To save the address, press the **ENTER** key.

The figure shows the sequence to use to enter a setting. Subsequent sections provide more detail.

Figure 4-19: Front panel keypad use

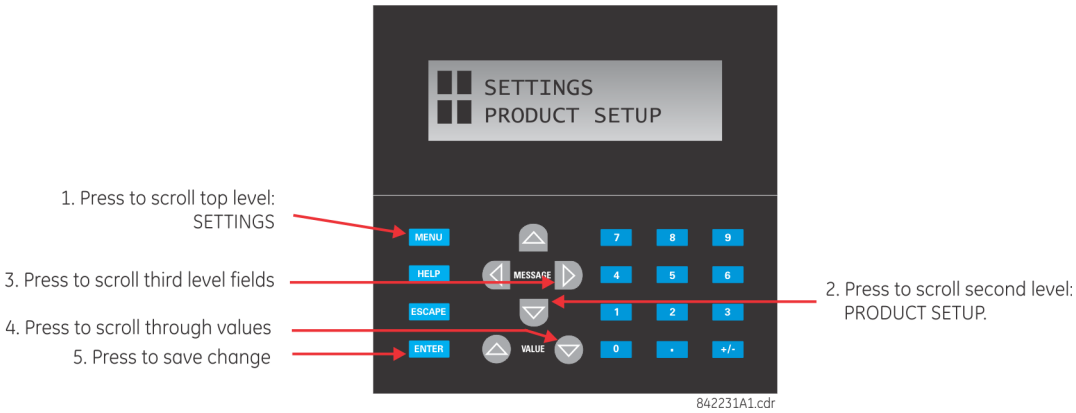

4.2.3 Menu navigation

Press the **MENU** key to select a header display page (top-level menu). The header title appears momentarily followed by a header display page menu item. Each press of the **MENU** key advances through the following main headings:

- Actual Values
- Settings
- Commands
- Targets
- Factory Service
- User displays (when enabled)

4.2.4 Menu hierarchy

The setting and actual value messages are arranged hierarchically. The header display pages are indicated by double scroll bars (■■), while sub-header pages are indicated by single scroll bar (■). The header display pages represent the highest level of the hierarchy and the sub-header display pages fall below this level. The **MESSAGE** up and down arrow keys move within a group of headers, sub-headers, setting values, or actual values. Continually pressing the **MESSAGE** right arrow from a header display displays specific information for the category. Conversely, continually pressing the **MESSAGE** left arrow from a setting value or actual value display returns to the header display.

Default values are indicated in this instruction manual in mixed case. In the example shown here, the default access level is Restricted.

Highest level **Lowest level (setting value)**

```
■■ SETTINGS          ⇔  ■ SECURITY        ⇔  ACCESS LEVEL:
■■ PRODUCT SETUP        ■                     Restricted
      ⇕
■■ SETTINGS
■■ SYSTEM SETUP
```

4.2.4.1 Example

■■ ACTUAL VALUES ■■ STATUS	Press the **MENU** key until the Actual Values header page appears. This page contains system and relay status information.
⇩	
■■ SETTINGS ■■ PRODUCT SETUP	Press the **MENU** key until the Settings header page appears. This category contains settings to configure the relay.
⇩	
■ SECURITY ■	Press the **MESSAGE** right arrow once to display the first sub-header (Security).
⇩	
ACCESS LEVEL: Restricted	Press the **MESSAGE** right arrow once to display the first setting for Security.
⇩	
■ SECURITY ■	Press the **MESSAGE** left arrow to return to the Security heading.
⇩	
■ DISPLAY ■ PROPERTIES	Press the **MESSAGE** down arrow to display the second setting sub-header associated with the Product Setup header.
⇩	
LANGUAGE: English	Press the **MESSAGE** right arrow once to display the first setting for Display Properties.
⇩	
■■ SETTINGS ■■ SYSTEM SETUP	Press the **MESSAGE** left arrow to return to the Display Properties page, then again to return to the Product Setup Page. Press the **MESSAGE** down arrow to move to the next Settings page. This page contains settings for System Setup.

4.2.5 Changing settings

4.2.5.1 Entering numerical data

Each numerical setting has its own minimum, maximum, and increment value associated with it. These parameters define what values are acceptable for a setting.

FLASH MESSAGE TIME: 10.0 s	For example, select the **SETTINGS** ⇨ **PRODUCT SETUP** ⇨⇩ **DISPLAY PROPERTIES** ⇨⇩ **FLASH MESSAGE TIME** setting.
⇩	
MINIMUM: 0.5 MAXIMUM: 10.0	Press the **HELP** key to view the minimum and maximum values. Press the key again to view the next context sensitive help message.

Two methods of editing and storing a numerical setting value are available.

- **0 to 9 and decimal point** — The relay numeric keypad works the same as a calculator. A number is entered one digit at a time. The leftmost digit is entered first and the rightmost digit is entered last. Pressing the **MESSAGE** left arrow or pressing the **ESCAPE** key, returns the original value to the display.
- **VALUE keys** — The **VALUE** up arrow increments the displayed value by the step value, up to the maximum value allowed. While at the maximum value, pressing the **VALUE** up arrow again allows the setting selection to continue upward from the minimum value. The **VALUE** down arrow decrements the displayed value by the step value, down to the minimum value. While at the minimum value, pressing the **VALUE** down arrow again allows the setting selection to continue downward from the maximum value.

FLASH MESSAGE **TIME: 2.5 s**	As an example, set the flash message time setting to 2.5 seconds. Press the appropriate numeric keys in the sequence "2 . 5". The display message changes as the digits are being entered.
⇩	
NEW SETTING **HAS BEEN STORED**	Until **ENTER** is pressed, editing changes are not registered by the relay. Press **ENTER** to store the new value in memory. This flash message momentarily appears as confirmation of the storing process. Numerical values that contain decimal places are rounded-off if more decimal place digits are entered than specified by the step value.

4

4.2.5.2 Entering enumeration data

Enumeration settings have data values that are part of a set, whose members are explicitly defined by a name. A set has two or more members.

ACCESS LEVEL: **Restricted**	For example, the selections available for **ACCESS LEVEL** are "Restricted," "Command," "Setting," and "Factory Service."

Enumeration type values are changed using the **VALUE** keys. The **VALUE** up arrow displays the next selection while the **VALUE** down arrow displays the previous selection.

ACCESS LEVEL: **Setting**	If the **ACCESS LEVEL** needs to be "Setting," press the **VALUE** keys until the proper selection displays. Press **HELP** at any time for the context sensitive help messages.
⇩	
NEW SETTING **HAS BEEN STORED**	Changes are not registered by the relay until the **ENTER** key is pressed. Pressing **ENTER** stores the new value in memory. This flash message momentarily appears as confirmation.

4.2.5.3 Entering alphanumeric text

Text settings have data values that are fixed in length, but user-defined in characters. They can be upper-case letters, lower-case letters, numerals, and a selection of special characters.

There are several places where text messages can be programmed to allow the relay to be customized for specific applications. One example is the Message Scratchpad. Use the following procedure to enter alphanumeric text messages.

For example, enter the text "Breaker #1".

1. Press the decimal point to enter text edit mode.
2. Press the **VALUE** keys until the character 'B' appears; press the decimal key to advance the cursor to the next position.
3. Repeat step 2 for the remaining characters: r,e,a,k,e,r, ,#,1.
4. Press **ENTER** to store the text.
5. If you have any problem, press **HELP** to view context sensitive help. Flash messages appear sequentially for several seconds each. For the case of a text setting message, pressing **HELP** displays how to edit and store new values.

4.2.6 Faceplate

4.2.6.1 Enhanced faceplate

The front panel consists of LED panels, an RS232 port, keypad, LCD display, control pushbuttons, and optional user-programmable pushbuttons.

The faceplate is hinged to allow access to the removable modules.

Figure 4-20: Enhanced faceplate

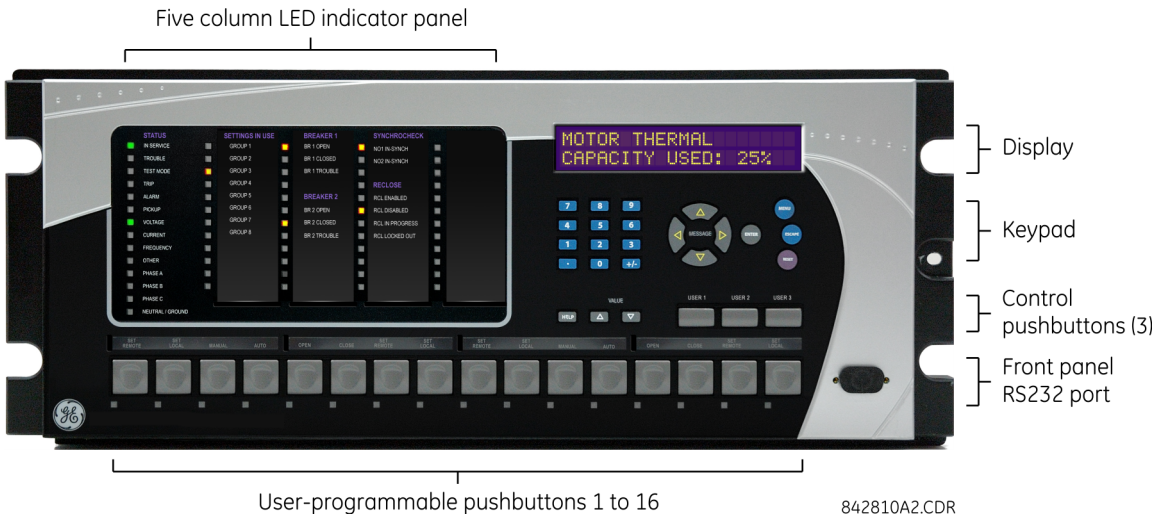

4.2.6.2 Basic faceplate

The front panel consists of LED panels, an RS232 port, keypad, LCD display, control pushbuttons, and optional user-programmable pushbuttons.

The faceplate is hinged to allow easy access to the removable modules. There is also a removable dust cover that fits over the faceplate that must be removed in order to access the keypad panel. The following figure shows the horizontal arrangement of the faceplate panel.

Figure 4-21: Basic horizontal faceplate

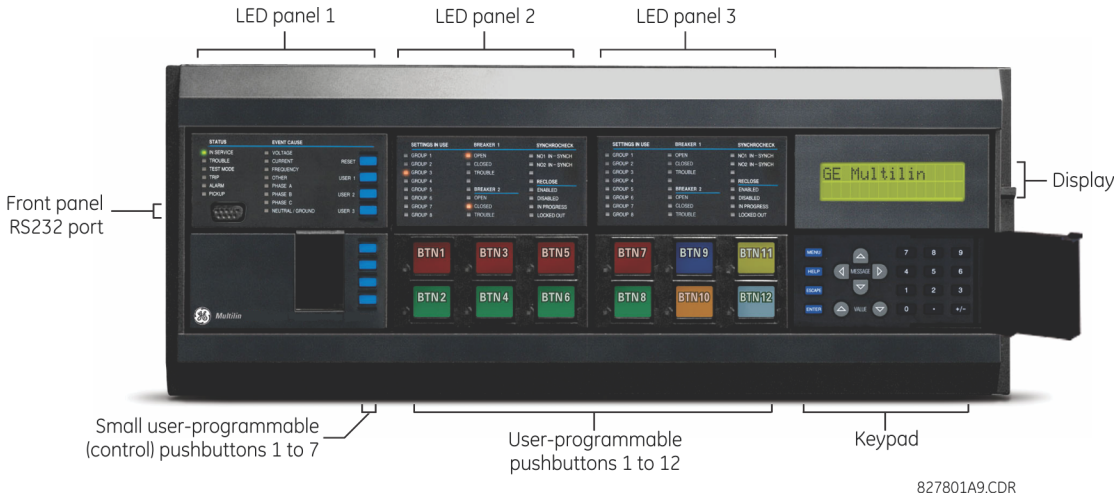

The following figure shows the vertical arrangement of the faceplate panel for relays ordered with the vertical option.

4

Figure 4-22: Basic vertical faceplate

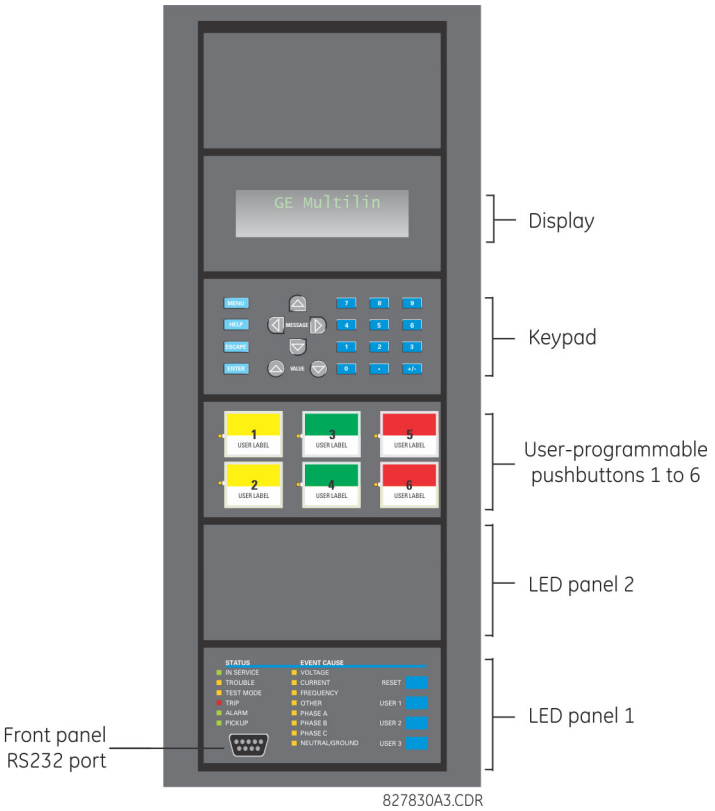

4.2.7 LED indicators

4.2.7.1 Enhanced faceplate

The enhanced front panel display provides five columns of LED indicators. The first column contains 14 status and event-cause LEDs. The next four columns contain the 48 user-programmable LEDs.

The **RESET** key is used to reset any latched LED indicator or target message, once the condition has been cleared (these latched conditions can also be reset via the **SETTINGS** ⇨⇩ **INPUT/OUTPUTS** ⇨⇩ **RESETTING** menu).

The **USER** keys are used by the breaker control feature.

Figure 4-23: Typical LED panel for enhanced faceplate

842811A1.CDR

The status indicators in the first column are as follows:

- **IN SERVICE** — This LED indicates that control power is applied, all monitored inputs, outputs, and internal systems are OK, and that the device has been programmed
- **TROUBLE** — This LED indicates that the relay has detected an internal problem
- **TEST MODE** — This LED indicates that the relay is in test mode. For more information, see the Test Mode section in the Settings chapter.
- **TRIP** — This LED indicates that the FlexLogic operand serving as a trip switch has operated. This indicator always latches; as such, a reset command must be initiated to allow the latch to reset.
- **ALARM** — This LED indicates that the FlexLogic operand serving as an alarm switch has operated. This indicator is never latched.
- **PICKUP** — This LED indicates that an element is picked up. This indicator is never latched.

The event-cause indicators in the first column are as follows.

Event-cause LEDs are turned on or off by protection elements that have their respective target setting selected as either "Enabled" or "Latched." If a protection element target setting is "Enabled," then the corresponding event-cause LEDs remain on as long as the operate operand associated with the element remains asserted. If a protection element target setting is "Latched," then the corresponding event-cause LEDs turn on when the operate operand associated with the element is asserted and remain on until the **RESET** button on the front panel is pressed after the operand is reset.

All elements that are able to discriminate faulted phases can independently turn off or on the phase A, B, or C LEDs. This includes phase instantaneous overcurrent, phase undervoltage, and so on. This means that the phase A, B, and C operate operands for individual protection elements are ORed to turn on or off the phase A, B, or C LEDs.

- **VOLTAGE** — This LED indicates voltage was involved
- **CURRENT** — This LED indicates current was involved
- **FREQUENCY** — This LED indicates frequency was involved
- **OTHER** — This LED indicates a composite function that is not solely current, voltage, or frequency based (distance or power for example) or a control function (digital element or trip bus for example)
- **PHASE A** — This LED indicates phase A was involved
- **PHASE B** — This LED indicates phase B was involved
- **PHASE C** — This LED indicates phase C was involved
- **NEUTRAL/GROUND** — This LED indicates that neutral or ground was involved

The user-programmable LEDs consist of 48 amber LED indicators in four columns. The operation of these LEDs is user-defined. Support for applying a customized label beside every LED is provided. Default labels are shipped in the label package of every B30, together with custom templates. The default labels can be replaced by user-printed labels.

User customization of LED operation is of maximum benefit in installations where languages other than English are used to communicate with operators. See the User-Programmable LEDs section in chapter 5 for the settings used to program the operation of the LEDs on these panels.

4.2.7.2 Basic faceplate

The basic faceplate consists of three panels with LED indicators, keys, and a communications port. The **RESET** key is used to reset any latched LED indicator or target message, once the condition has been cleared (these latched conditions can also be reset via the **SETTINGS** ⇨⇩ **INPUT/OUTPUTS** ⇨⇩ **RESETTING** menu). The RS232 port is for connection to a computer.

The **USER** keys are used by the breaker control feature.

Figure 4-24: LED panel 1

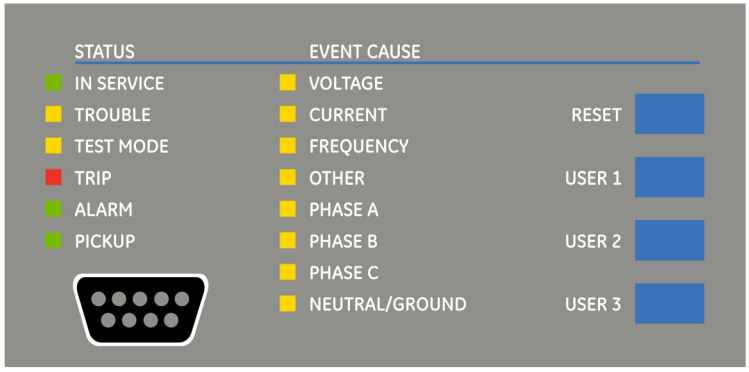

842781A1.CDR

Status indicators

- **IN SERVICE** — Indicates that control power is applied, all monitored inputs/outputs and internal systems are fine, the relay has been programmed
- **TROUBLE** — Indicates that the relay has detected an internal problem
- **TEST MODE** — Indicates that the relay is in test mode. For more information, see the Test Mode section in the Settings chapter.
- **TRIP** — Indicates that the selected FlexLogic operand serving as a Trip switch has operated. This indicator always latches; the reset command must be initiated to allow the latch to be reset.
- **ALARM** — Indicates that the selected FlexLogic operand serving as an Alarm switch has operated. This indicator is never latched.
- **PICKUP** — Indicates that an element is picked up. This indicator is never latched.

Event-cause indicators

Event-cause LEDs are turned on or off by protection elements that have their respective target setting selected as either "Enabled" or "Latched." If a protection element target setting is "Enabled," then the corresponding event cause LEDs remain on as long as operate the operand associated with the element remains asserted. If a protection element target setting is "Latched," then the corresponding event cause LEDs turn on when the operate operand associated with the element is asserted and remain on until the **RESET** button on the front panel is pressed after the operand is reset.

All elements that are able to discriminate faulted phases can independently turn off or on the phase A, B, or C LEDs. This includes phase instantaneous overcurrent, phase undervoltage, and so on. This means that the phase A, B, and C operate operands for individual protection elements are ORed to turn on or off the phase A, B, or C LEDs.

- **VOLTAGE** — Indicates voltage was involved
- **CURRENT** — Indicates current was involved
- **FREQUENCY** — Indicates frequency was involved
- **OTHER** — Indicates a composite function that is not solely current, voltage, or frequency based (distance or power for example) or a control function (digital element or trip bus for example)
- **PHASE A** — Indicates phase A was involved
- **PHASE B** — Indicates phase B was involved
- **PHASE C** — Indicates phase C was involved
- **NEUTRAL/GROUND** — Indicates that neutral or ground was involved

User-programmable indicators

The second and third panels provide 48 amber LED indicators whose operation is controlled by the user. Support for applying a customized label beside every LED is provided.

User customization of LED operation is of maximum benefit in installations where languages other than English are used to communicate with operators. See the User-programmable LEDs section in chapter 5 for the settings used to program the operation of the LEDs on these panels.

Figure 4-25: LED panels 2 and 3 (index template)

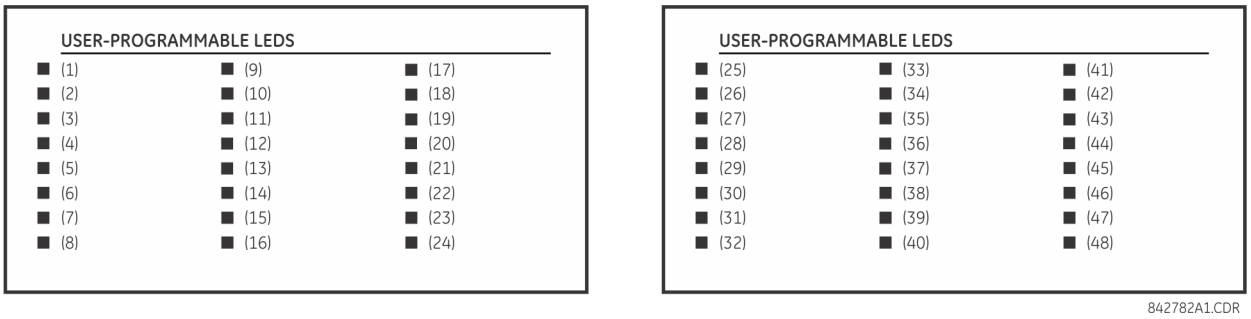

Default labels for LED panel 2

The default labels are intended to represent the following:

- **GROUP 1...6** — The illuminated GROUP is the active settings group

NOTE

Firmware revisions 2.9x and earlier support eight user setting groups; revisions 3.0x and higher support six setting groups. For convenience of users using earlier firmware revisions, the relay panel shows eight setting groups. Even though the LEDs have default labels, they are fully user-programmable.

The relay is shipped with the default label for the LED panel 2. The LEDs, however, are not pre-programmed. To match the pre-printed label, the LED settings must be entered as shown in the User-programmable LEDs section of chapter 5. The LEDs are fully user-programmable. The default labels can be replaced by user-printed labels for both panels as explained in the next section.

Figure 4-26: LED panel 2 (default labels)

4.2.8 Custom LED labeling

4.2.8.1 Enhanced faceplate

The following procedure requires these pre-requisites:

- EnerVista UR Setup software is installed and operational
- The B30 settings have been saved to a settings file
- The UR front panel label cutout sheet (GE part number 1006-0047) has been downloaded from http://www.gegridsolutions.com/products/support/ur/URLEDenhanced.doc and printed
- Small-bladed knife

To create custom LED labels for the enhanced front panel display:

1. Start the EnerVista UR Setup software.
2. Select the **Front Panel Label Designer** item from the Online Window or Offline Window area, for example under **Settings > Front Panel Label Designer**. If the option does not display, it means that the B30 does not have an enhanced front panel or that no customization is possible. The Online Window has the advantage of displaying the live fields as opposed to blank fields.

   The window displays.

Figure 4-27: Front panel label designer window

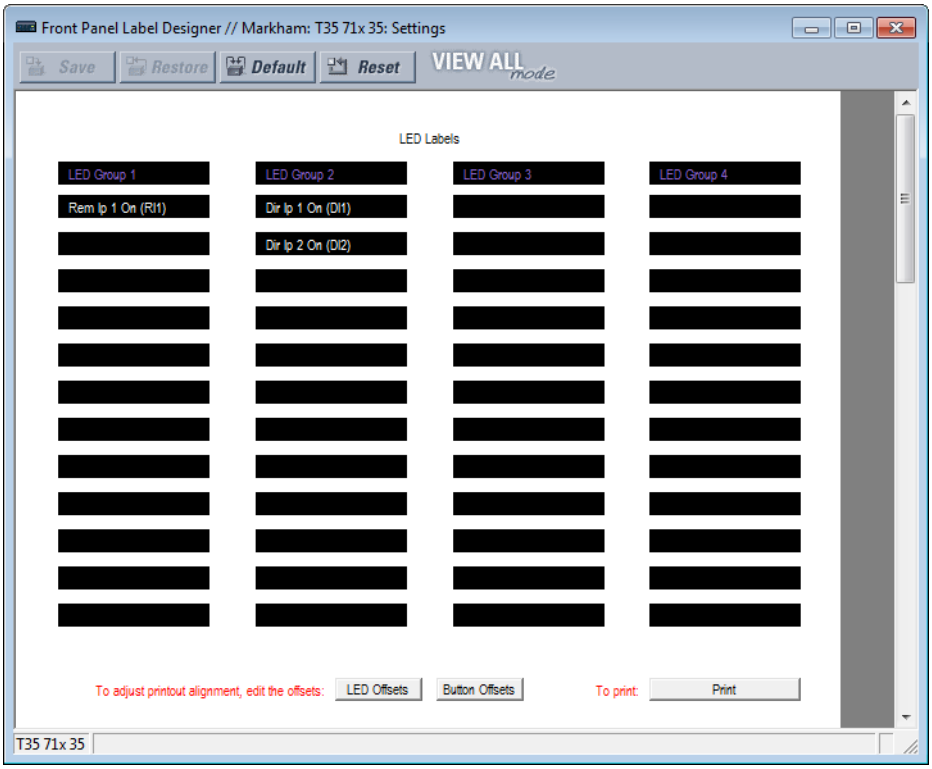

3. Enter the text to appear next to each LED and above each user-programmable pushbutton in the fields provided. The **LED Offsets** and **Button Offsets** buttons move all labels left/right and up/down on the page (they both do the same action, so use either button). The **Button Offsets** button does not display when there are no pushbuttons to customize.
4. Feed the UR front panel label cutout sheet into a printer and press the **Print** button in the front panel report window.
5. When printing is complete, fold the sheet along the perforated lines and punch out the labels.
6. Remove the UR label insert tool from the package and bend the tabs as described in the following procedures. These tabs are used for removal of the default and custom LED labels.

NOTE

Use the tool EXACTLY as outlined as follows, with the printed side containing the GE part number facing the user.

The label package shipped with every B30 contains the three default labels, the custom label template sheet, and the label removal tool.

If the default labels are suitable for your application, insert them in the appropriate slots and program the LEDs to match them. If you require custom labels, use the following procedures to remove the original labels and insert the new ones.

To set up and use the label removal tool:

1. Bend the tabs at the left end of the tool upwards as shown.

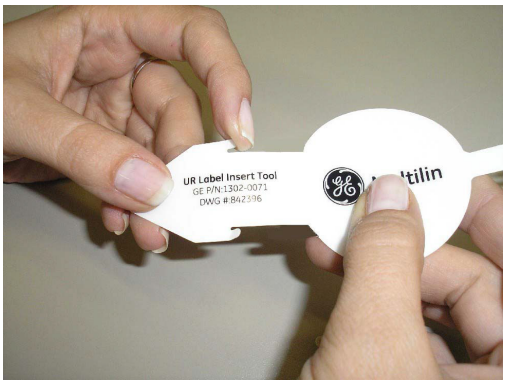

Bend the tab at the center of the tool tail as shown.

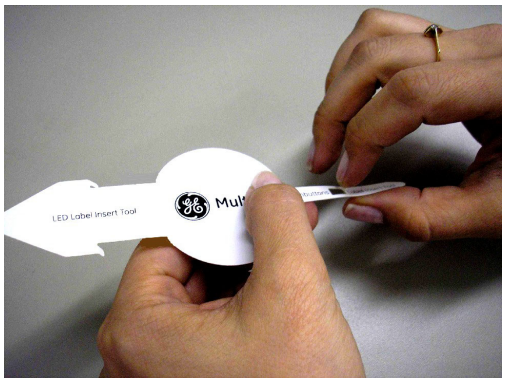

To remove the LED labels from the B30 enhanced front panel and insert the custom labels:

1. Use the knife to lift the LED label and slide the label tool underneath. Ensure that the bent tabs are pointing away from the relay.

2. Slide the label tool under the LED label until the tabs snap out as shown. This attaches the label tool to the LED label.

3. Remove the tool and attached LED label as shown.

4. Slide the new LED label inside the pocket until the text is properly aligned with the LEDs, as shown.

To remove the user-programmable pushbutton labels from the B30 enhanced front panel and insert the custom labels:

1. Use the knife to lift the pushbutton label and slide the tail of the label tool underneath, as shown. Ensure that the bent

tab points away from the relay.

2. Slide the label tool under the user-programmable pushbutton label until the tabs snap out as shown. This attaches the label tool to the user-programmable pushbutton label.

3. Remove the tool and attached user-programmable pushbutton label.

4. Slide the new user-programmable pushbutton label inside the pocket until the text is properly aligned with the

buttons.

4

4.2.9 Breaker control

The B30 can interface with associated circuit breakers. In many cases the application monitors the state of the breaker, that can be presented on faceplate LEDs, along with a breaker trouble indication. Breaker operations can be manually initiated from the faceplate keypad or automatically initiated from a FlexLogic operand. A setting is provided to assign names to each breaker; this user-assigned name is for the display of related flash messages. These features are provided for two breakers; the user can use only those portions of the design relevant to a single breaker, which must be breaker 1.

It is assumed in the following discussion that the **SETTINGS** ⇨⇩ **SYSTEM SETUP** ⇨⇩ **BREAKERS** ⇨ **BREAKER 1(2)** ⇨ **BREAKER FUNCTION** setting is "Enabled" for each breaker.

4.2.9.1 Control mode selection and monitoring

Installations can require that a breaker be operated in the three-pole only mode (3-pole), or in the one and three-pole (1-pole) mode, selected by setting. If the mode is selected as three-pole, a single input tracks the breaker open or closed position. If the mode is selected as one-pole, all three breaker pole states must be input to the relay. These inputs must be in agreement to indicate the position of the breaker.

For the following discussion it is assumed that the **SETTINGS** ⇨⇩ **SYSTEM SETUP** ⇨⇩ **BREAKERS** ⇨ **BREAKER 1(2)** ⇨⇩ **BREAKER 1(2) PUSH BUTTON CONTROL** setting is “Enabled” for each breaker.

4.2.9.2 Faceplate (user key) control

After the 30 minute interval during which command functions are permitted after a correct command password, the user cannot open or close a breaker via the keypad. The following discussions begin from the not-permitted state.

4.2.9.3 Control of two breakers

For the following setup example, the **(Name)** field represents the user-programmed variable name.

For this example, the relay is connected and programmed for both breaker 1 and breaker 2. The **USER 1** key performs the selection of which breaker is to be operated by the **USER 2** and **USER 3** keys. The **USER 2** key manually closes the breaker, and the **USER 3** key manually opens the breaker.

ENTER COMMAND PASSWORD	This message appears when the **USER 1**, **USER 2**, or **USER** 3 key is pressed and a **COMMAND PASSWORD** is required, that is, if **COMMAND PASSWORD** is enabled and no commands have been issued within the last 30 minutes.
Press USER 1 To Select Breaker	This message appears if the correct password is entered or if none is required. This message displays for 30 seconds or until the **USER 1** key is pressed again.
BKR1-(Name) SELECTED USER 2=CLS/USER 3=OP	This message displays after the **USER 1** key is pressed for the second time. Three possible actions can be performed from this state within 30 seconds as per the following items (1), (2) and (3).
(1)	
USER 2 OFF/ON To Close BKR1-(Name)	If the **USER 2** key is pressed, this message appears for 20 seconds. If the **USER 2** key is pressed again within that time, a signal is created that can be programmed to operate an output relay to close breaker 1.
(2)	
USER 3 OFF/ON To Open BKR1-(Name)	If the **USER 3** key is pressed, this message appears for 20 seconds. If the **USER 3** key is pressed again within that time, a signal is created that can be programmed to operate an output relay to open breaker 1.
(3)	
BKR2-(Name) SELECTED USER 2=CLS/USER 3=OP	If the **USER 1** key is pressed at this step, this message appears showing that a different breaker is selected. Three possible actions can be performed from this state as per (1), (2) and (3). Repeatedly pressing the **USER 1** key alternates between available breakers. Pressing keys other than **USER 1**, **2**, or **3** at any time cancels the breaker control function.

4.2.9.4 Control of one breaker

For this application, the relay is connected and programmed for breaker 1 only. Operation for this application is identical to that described in the previous section for two breakers.

4.2.10 Change passwords

The information in this section refers to password security. For information on how to set the password for the first time or change CyberSentry passwords, see the previous chapter or the Settings > Product Setup > Security > CyberSentry section in the next chapter.

The B30 supports password entry from a local or remote connection.

Local access is defined as access to settings or commands via the faceplate. This includes both keypad entry and the RS232 port. Remote access is defined as access to settings or commands via any rear communications port. This includes both Ethernet and RS485 connections. Any change to the local or remote password enables this functionality.

When entering a settings or command password via EnerVista or any serial interface, the user must enter the corresponding connection password. If the connection is to the back of the B30, the remote password must be used. If the connection is to the RS232 port of the faceplate, the local password must be used.

There are two user security access levels, setting and command, for which you can set a password for each. Use of a password for each level controls whether users can enter commands or change settings. Another option is to specify setting and/or command access for individual user accounts.

- **Setting** — Allows the user to make any changes to any of the setting values:
  - Changing any setting
  - Test mode operation
- **Command** — Restricts the user from making any settings changes, but allows the user to perform the following operations:
  - Changing the state of virtual inputs
  - Clearing the event records

- Clearing the oscillography records
- Changing the date and time
- Clearing the breaker arcing current
- Clearing the data logger
- Clearing the user-programmable pushbutton states

To enter the initial setting or command password:

1. Press the **MENU** key until the **SETTINGS** header flashes momentarily and the **PRODUCT SETUP** message appears on the display.
2. Press the **MESSAGE** right arrow until the **ACCESS LEVEL** message appears on the display.
3. Press the **MESSAGE** down arrow until the **CHANGE LOCAL PASSWORDS** message appears on the display.
4. Press the **MESSAGE** right arrow until the **CHANGE SETTING PASSWORD** or **CHANGE COMMAND PASSWORD** message appears on the display.

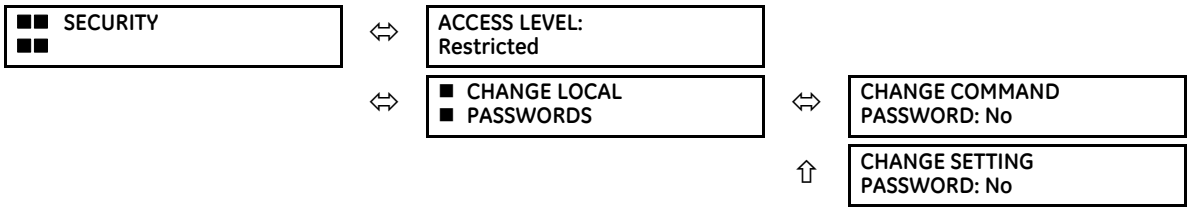

5. After the **CHANGE...PASSWORD** message appears on the display, press the **VALUE** up or down arrow to change the selection to "Yes."
6. Press the **ENTER** key and the display prompts you to **ENTER NEW PASSWORD**.
7. Type in a password and press the **ENTER** key.
8. When **VERIFY NEW PASSWORD** displays, re-type the password and press **ENTER**.

9. When the **NEW PASSWORD HAS BEEN STORED** message appears, your new Setting (or Command) password is active.

4.2.11 Invalid password entry

By default, when an incorrect Command or Setting password has been entered via the faceplate interface three times within five minutes, the LOCAL ACCESS DENIED FlexLogic operand is set to "On" and the B30 does not allow settings or command level access via the faceplate interface for five minutes.

By default, when an incorrect Command or Setting password has been entered via any external communications interface three times within five minutes, the REMOTE ACCESS DENIED FlexLogic operand is set to "On" and the B30 does not allow settings or command access via the any external communications interface for five minutes. The REMOTE ACCESS DENIED FlexLogic operand is set to "Off" after five minutes for a Command password or 30 minutes for a Settings password.

These default settings can be changed in EnerVista under **Settings > Product Setup > Security**.

4.3 Logic diagrams

Logic diagrams in this instruction manual provide an overview of function and settings. A logic diagram is based on

- Inputs-on the left side, which are setting and operands
- Logical gates, which is Boolean algebra to combine logical lines using AND, OR, NOT, and other gates to get a new logical state
- Logical operators, which are timers, one-shot operations, latches, and so on
- Outputs-on the right side, which are products of the manipulations with inputs, logical gates, and logical operators to produce new operands and define the output state of the element

True and false values are denoted by 1 and 0 respectively. A function usually is high/on/enabled when 1.

Reading from right to left in the following diagram, the TRIP BUS 1 OP and TRIP BUS 1 PKP FlexLogic operands on the right side are triggered when either the settings or reset latch in the middle of the diagram is triggered. When this applies, the TRIP BUS 1 OP operand is triggered after the delay set by the **TRIP BUS 1 PICKUP DELAY** or **TRIP BUS 1 RESET DELAY** setting, while the TRIP BUS 1 PKP operand initiates immediately. The settings or reset latch in the middle of the diagram is triggered as follows.

- For the reset, one of three conditions are required to meet the OR requirement shown at the bottom left. That is, the **TRIP BUS 1 LATCHING** setting must be 0=Disabled (which is negated by the NOT function to become 1=Enabled), output from the TRIP BUS 1 RESET FlexLogic operand must be 1, or output from the RESET OP FlexLogic operand must be 1.
- For the settings, one of 16 input conditions at the top left must be met for the OR, the **TRIP BUS 1 FUNCTION** must be Enabled, and the TRIP BUS 1 BLOCK output must output as 0, which is then negated/reversed by NOT to become 1.

Table 4-2: Logic diagram symbols

Symbol	Description
= Off	Output from FlexLogic operand, so user-defined
= Enabled	1 = Enabled and 0 = Disabled
OR	Any function input on the left side satisfies the condition
AND	All functions input on the left side are required to satisfy the condition
O	Not. Negates/reverses the output, for example 0 becomes 1.
●	Connection
S, R	Set, Reset
T_{PKP}	Timer pickup. Triggered by the settings latch in the diagram.
T_{RST}	Timer reset. Triggered by the reset latch in the diagram.

Figure 4-28: Logic diagram

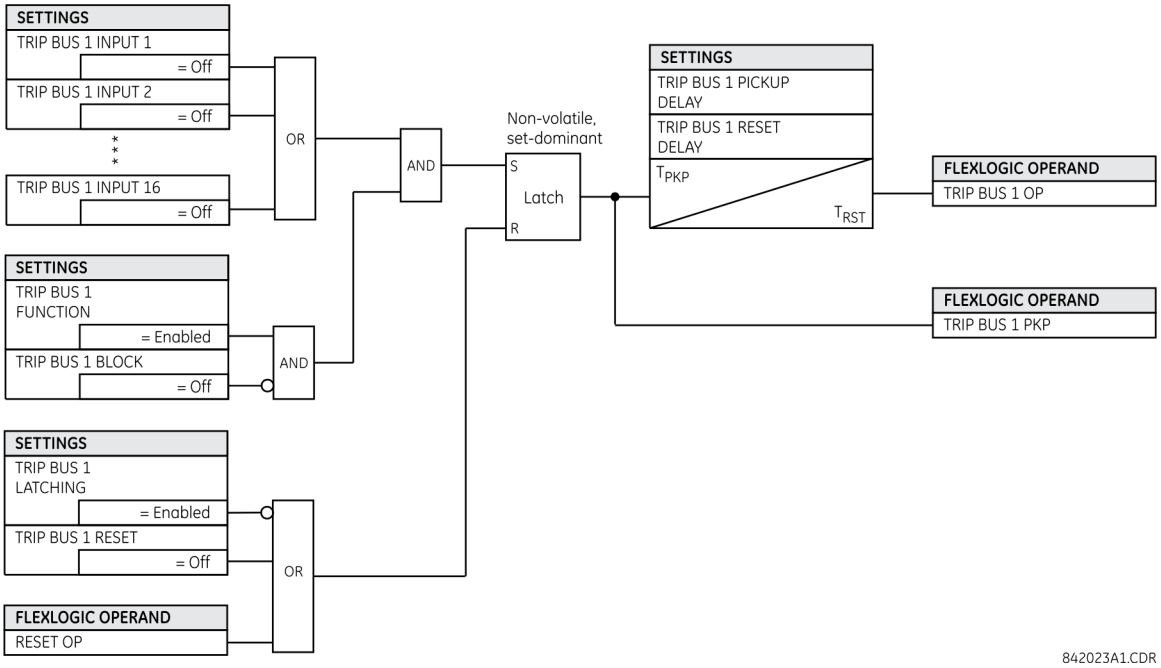

4.4 FlexLogic design and monitoring using Engineer

Parts of EnerVista Viewpoint Engineer software are integrated in the EnerVista UR Setup software. Engineer can be used to create and modify FlexLogic that is used by a device, such as to monitor output, monitor triggers, and create self-tests.

Features include

- Automatically displays existing FlexLogic
- Drag-and-drop interface
- Open multiple tabs and edit simultaneously
- Display symbols in IEC, ISO, or UR formats
- Export a diagram as BMP file or copy it to the clipboard for import into other applications
- Scale and print files in various paper sizes
- Works with all UR firmware versions

The figure shows an example where several inputs are used to trigger an output. With the OR function, any one of the inputs can trigger the output.

Figure 4-29: Inputs triggering output in Engineer

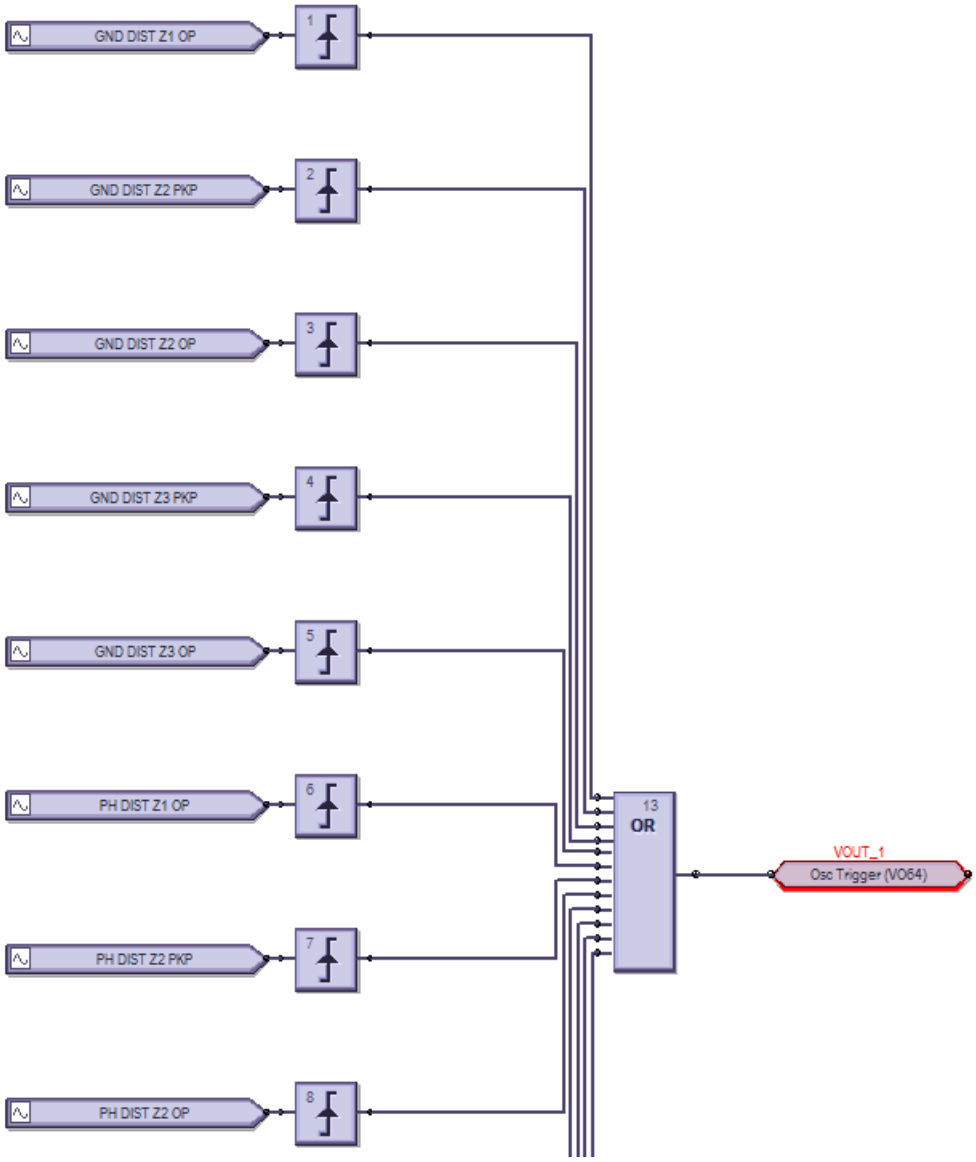

The process is as follows:

- Modify or create a logic diagram in the Offline Window area of the EnerVista UR Setup software
- Compile it and troubleshoot any errors
- The logic populates automatically into the FlexLogic Equation Editor
- Upload the file to the live device
- Monitor the output

This section explains how to use Engineer. It outlines the following topics:

- Design logic
- Send file to and from device
- Monitor logic
- View front panel
- Generate connectivity report
- Preferences

- Toolbars

4.4.1 Design logic

FlexLogic can be created with a block diagram. Note that although work is completed in the Offline Window area of the software, communication occurs with the online device, for example when switching to monitoring mode.

The following procedures are outlined:

- Examples
- Add existing FlexLogic equations
- Create a logic diagram/sheet
- Rapidly add logic blocks in sequence
- Connect two logic diagrams/sheets
- Optimize the logic
- Change logic order
- Search logic
- Exclude sheet from compile

4.4.1.1 Examples

Create oscillography trigger every three minutes

Figure 4-30: Three-minute timer turns on LED for 10 seconds

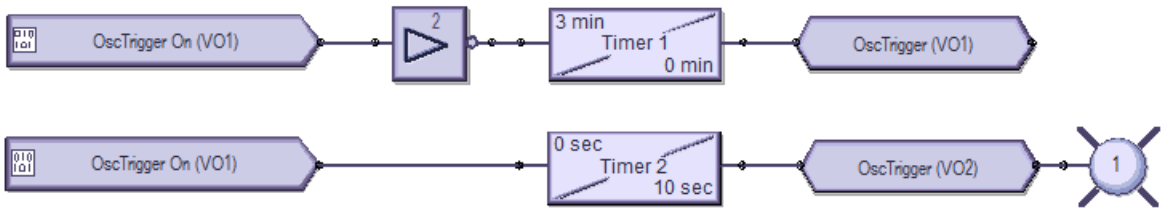

Preparation — Under **Settings > Inputs/Outputs > Virtual Outputs**, the first and second virtual outputs are named OscTrigger

Top logic — Three-minute timer trigger

Bottom logic — Turn on LED 1 for 10 seconds when the trigger starts

Create data logger trigger every seven minutes

Figure 4-31: Seven-minute timer turns on LED for 10 seconds

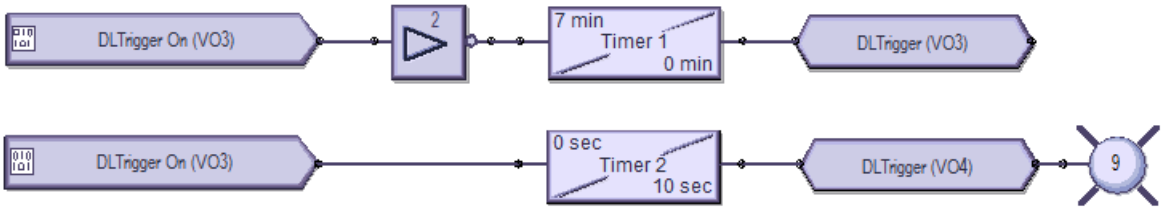

Preparation — Under **Settings > Inputs/Outputs > Virtual Outputs**, virtual outputs 3 and 4 are named DLTrigger

Top logic — Seven-minute timer trigger

Bottom logic — Turn on LED 9 for 10 seconds when the trigger starts

Create events every minute, then every 100 ms

Figure 4-32: One-minute timer turns on LED and creates events every 100 ms

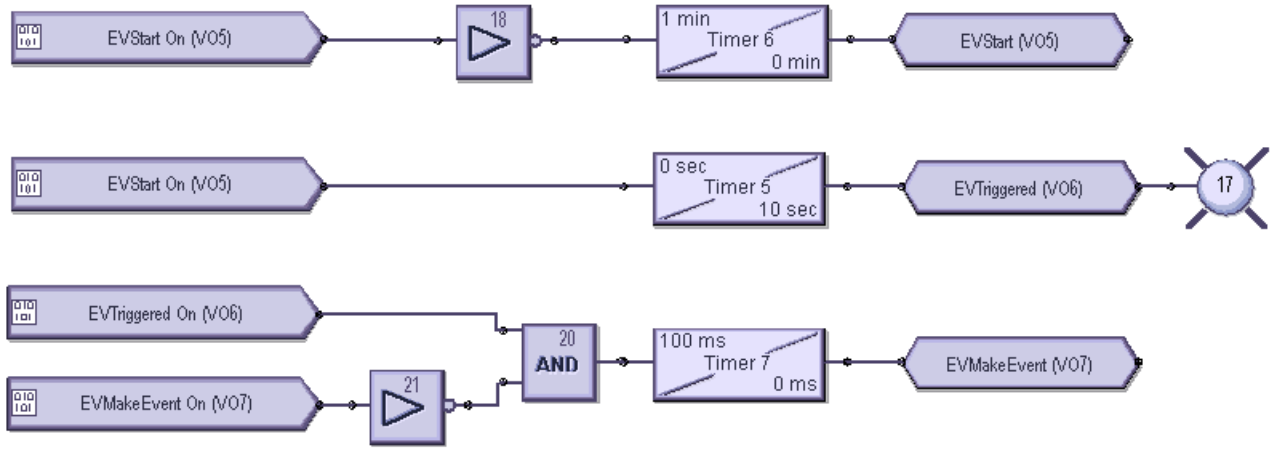

Preparation — Under **Settings > Inputs/Outputs > Virtual Outputs**, virtual output 5 is named EVStart, 6 is named EVTriggered, and 7 is named EVMakeEvent

Top logic — One-minute timer trigger

Middle logic — Turn on LED 17 for 10 seconds when trigger starts

Bottom logic — Create events at 100 ms intervals for the same 10 second period

4.4.1.2 Add existing FlexLogic equations

A logic diagram can be created using existing FlexLogic equations (this section) or by creating new ones (next section).

When using existing equations, you modify them in the FlexLogic Equation Editor in the Offline Window area, then apply them.

NOTE

The FlexLogic Equation Editor window is in view-only mode when the Logic Designer is open. To instead work in the FlexLogic Equation Editor, close the Logic Designer window, then re-open the FlexLogic Equation Editor.

To create a logic diagram using existing FlexLogic equations:

1. In the Offline Window area, modify the FlexLogic for the device under **FlexLogic > FlexLogic Equation Editor**. If the device is not listed, right-click the device in the Online Window area and select the **Add Device to Offline Window** option.

   Upon saving the modified FlexLogic, a yellow icon appears for the device in the Offline Window area to indicate that the logic differs from the Online device.
2. In the Offline Window area, access **Engineer** for the device, then **Logic Designer**. The logic opens.
3. Click the **Edit > Auto Populate Workbook** menu item. If the software prompts if you want to keep or discard existing sheets, either is acceptable, with the older excluded sheeted being denoted by brackets, such as < Sheet 1 >. The logic displays in the various tabs. The FlexLogic created in the equation editor appears in Sheet 1, for example.

4.4.1.3 Create logic diagram

Upon access of the Logic Designer, the FlexLogic equations of the device display. You can create new logic in new sheets or modify the ones that display.

This procedure uses input / output logic as an example.

To create a logic diagram:

1. In the Offline Window area, access **Engineer** for the device, then **Logic Designer**. If the device is not listed, right-click

the device in the Online Window area and select the **Add Device to Offline Window** option.

Figure 4-33: Access Engineer in the Offline Window area

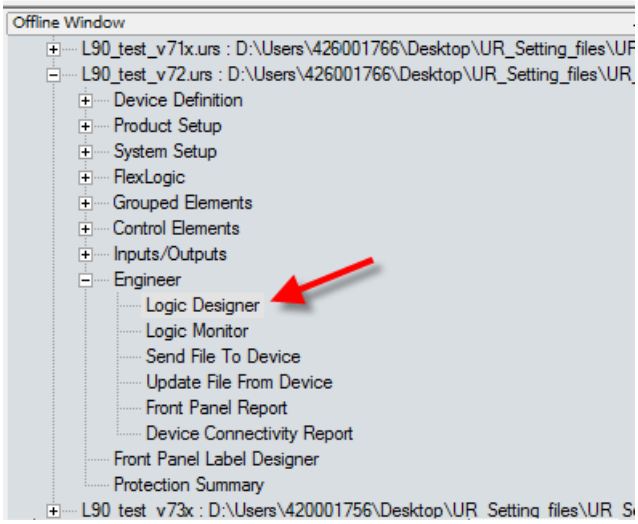

The default block diagram opens, which shows 48 inputs (boxes) and 48 user-programmable LEDs (circles).

Figure 4-34: Default view of FlexLogic designer

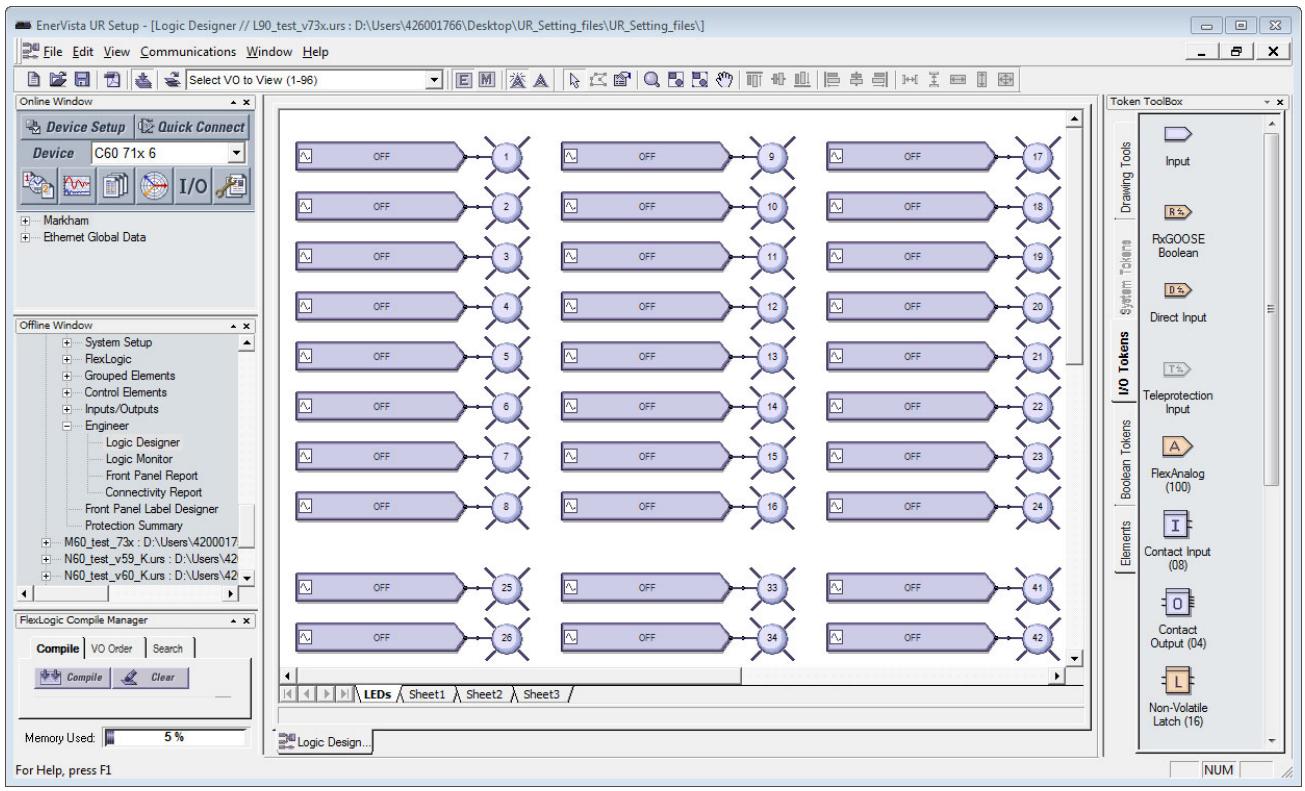

2. Optionally delete the default logic diagram by right-clicking its tab at the bottom of the window and selecting **Delete**.
3. To add a blank sheet, click **Edit > Add Sheet**. A new tab displays. Or use the last tab displayed, which is a blank sheet.
4. Optionally right-click the new tab and **Rename** it.
5. Add the input blocks to the logic diagram. For example, click the **I/O Tokens** tab on the right, click the **Input** element, then click in the logic sheet to add it. Or drag-and-drop it.

6. Double-click the block on the sheet to configure it, selecting from the two drop-down lists. The figure shows that virtual input 61 is being added. The **View Associated Screen** button opens its settings window.

Figure 4-35: Configuring an input block

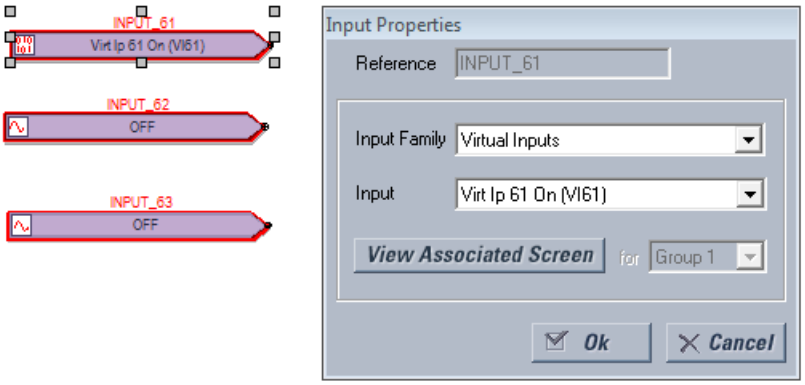

7. Add the output blocks to the logic diagram. For example, click the **I/O Tokens** tab, click the **Virtual Output** element, then click in the logic sheet to add it. Double-click the block on the sheet to configure it. For the name, make it unique. The figure shows virtual output 61 is being added, with a suffix of "io" added to the name to make it unique. Note that the outline color of a block is red until it is configured, and that this properties window varies by block and the selectable options by order code.

Figure 4-36: Configuring an output block

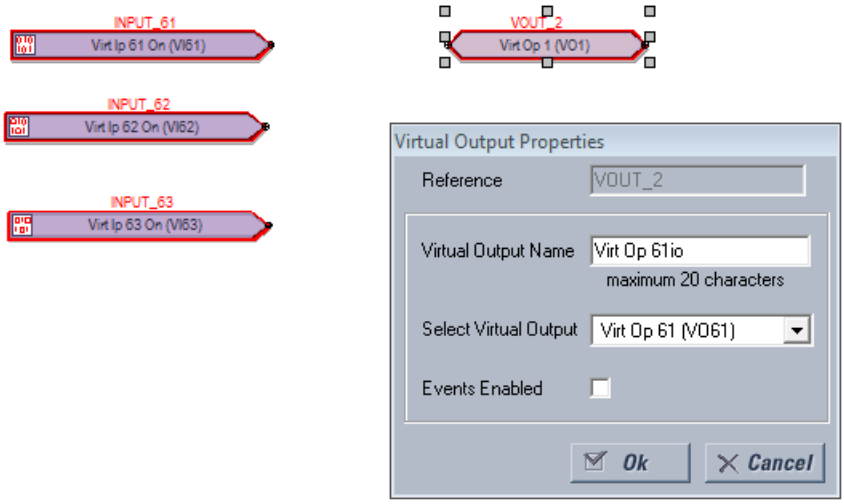

8. Connect the input blocks to the output blocks by drawing a line as follows. Click the **Drawing Tools** tab, then select the **Line** option. The cursor needs to be at the connection point to end the line, not elsewhere on the block. Note that the outline color is no longer red on the blocks.

Figure 4-37: Completed inputs and outputs

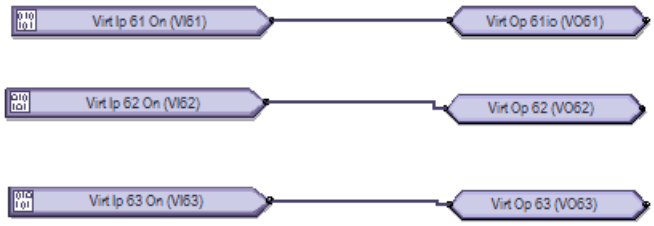

9. Add any remaining blocks or information. Right-click a block to copy and paste it. Notes are as follows.

   Add a text box — Drawing Tools > Text

   Add a FlexElement — Elements > FlexElement. An analog input is expected where a small arrow head shows in the box.

Figure 4-38: FlexElement accepts analog inputs on left side where arrow heads display

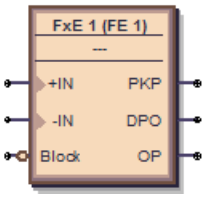

Add an Element — **Elements** tab. Available elements reflect the product, for example the **Control Elements** category.

Figure 4-39: Elements reflect Control Elements

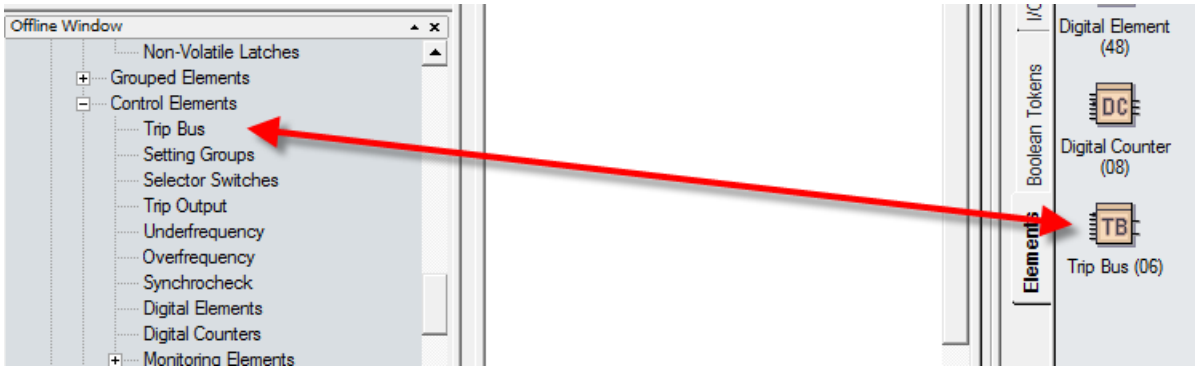

10. Check for any blocks that have a red outline. These are invalid. Fix them before continuing, for example by configuring them.
11. Compile the logic diagram to check for errors by clicking the **Compile** button at the bottom left or by pressing the **F7** key.

    If prompted about a message about sorting, click **Yes** to apply the default (for this example), which can be automatic sorting based on an algorithm that applies fastest execution time.

    With successful compiling, the file is saved and the FlexLogic equations populate automatically. Scroll up through the compile messages, with the red errors being the only messages that require fixing before proceeding.

    The figure shows that we forgot to add the "Io" suffix to the names of virtual outputs 62 and 63, as indicated by "Warning: Virtual output xx using default name." This warning is a minor warning.

    The warning "input using disabled feature" means that input needs to be enabled. Double-click the block, click the **View Associated Screen** button, enable the setting, save, and recompile.

    The output and messages are explained in the next section.

Some information displayed in the compile messages updates automatically, for example messages after a device is unplugged.

Figure 4-40: Compile and check the logic

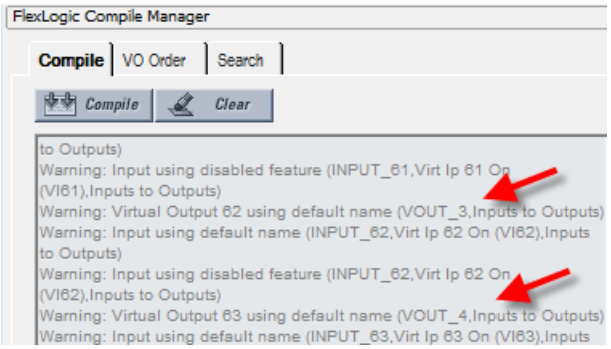

12. View the FlexLogic equations by navigating in the Offline Window area to **FlexLogic > FlexLogic Equation Editor**. The window opens with the entries displayed in the next tab.

Figure 4-41: Logic displayed in FlexLogic Equation Editor

FLEXLOGIC ENTRY	TYPE	SYNTAX
View Graphic	View	View
FlexLogic Entry 1	Virtual Inputs On	Virt Ip 61 On (VI61)
FlexLogic Entry 2	Assign Virtual Output	= Virt Op 61io (VO61)
FlexLogic Entry 3	Virtual Inputs On	Virt Ip 62 On (VI62)
FlexLogic Entry 4	Assign Virtual Output	= Virt Op 62io (VO62)
FlexLogic Entry 5	Virtual Inputs On	Virt Ip 63 On (VI63)
FlexLogic Entry 6	Assign Virtual Output	= Virt Op 63io (VO63)

13. Save the work.

The logic diagram has been created and the FlexLogic equations populated. The next steps are to upload the file to the device and to monitor the device.

4.4.1.4 Compiled results and warning messages

When a yellow caution icon displays in the Offline Window area, it means that the settings file is not synchronized with the online device. Right-click the device in the Offline Window area, and select the **Update SCL files** option. SCL refers to the Substation Configuration Language. An Instantiated IED capability description (IID) file is an example of an SCL file and contains the actual settings on a UR device.

Figure 4-42: Settings files not synchronized between offline and online files

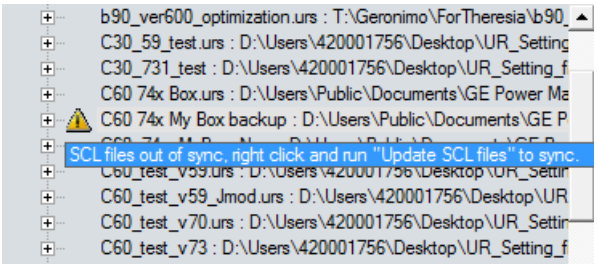

When the **Update SCL files** option is selected, the CID and IID files in the device folder are updated by the user configuration in the IEC 61850 panel and thereby become synchronized. The CID file and the IID file (depending on the preference 'Do not update IID file when updating SCL files') are updated. If the CID file is not already there, it is generated. The location of these files is C:\ProgramData\GE Power Management\urpc, for example, in the Offline and Online folders. Any FlexLogic equations entered in the Offline Window area are erased. The logic drawn in the Logic Designer window in Engineer in the Offline Window area remain. The warning icon disappears after updating.

The following information is contained in the compile window.

Figure 4-43: Compiled results

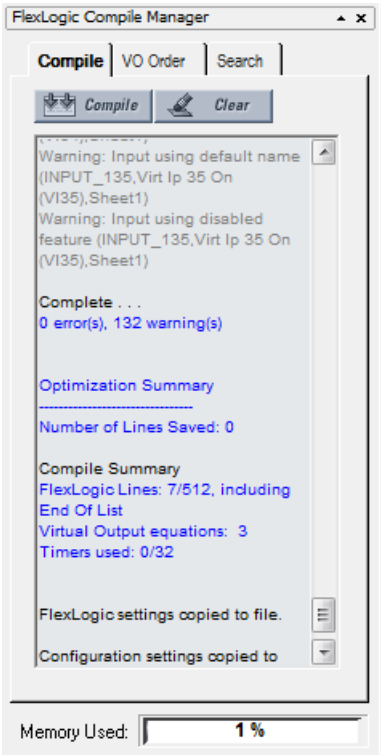

Number of Lines Saved — The number of compiled logic lines eliminated by using the optimization algorithm, as set in the **Optimize Compiled Output** option of the Preferences. In the example shown, no lines were saved because the optimizer is disabled.

FlexLogic Lines — The number of lines that the compiled logic uses, for example seven of 512 available.

Virtual Output equations — The number of FlexLogic equations used in the Logic Designer window.

Timers used — The number of timers used in the Logic Designer window.

Memory Used — The percent of memory used in the Logic Designer window.

Errors

Table 4-3: Errors from compiling

Category	Block or gate affected	Message	Description
Error	All	Number of lines (nnn) exceeds maximum limit of 512	The compiled result exceeds the limit of 512. Reduce the number of equations to 512 or less.
Error	Tag-In	Tag-in not configured (TAG_ID, SheetReference)	A Tag-In is connected to a circuit but the Tag-In is not referencing an existing Tag-Out
Error	1 Shots	One Shot is over limit (SYMBOL_ID, SheetReference)	The number of One-Shots contained within all of the VO blocks has exceeded the maximum allowed for the firmware revision. This value can either be 0 or 32.
Error	=VO	VO has no inputs (VO_ID, SheetReference)	A Virtual Output block is located within the FlexLogic diagram and there is no block connected as input to it. Connect and identify the inputs.
Error	Timer	Timer used more than once (TIMER_ID, SheetReference)	The same timer is used in more than one place in the editor. This means either the circuit that the Timer belongs to has been branched, or the Timer has been duplicated.

Category	Block or gate affected	Message	Description
Error	Input	Unrecognized Parameter (SYMBOL_ID,Name,SheetReference)	An Input symbol is configured to an item that is not recognized by the current order code and version. Possible cause: The order code and/or version of the settings file was converted causing the input parameter to become unavailable.

Warnings

When using the 'Reset OP' operand, a warning can appear indicating that this is a disabled feature. This means that the Reset Settting's FlexLogic operand is set to OFF. Resetting of the relay can be done by pressing the reset button on the front panel of the relay or by sending a Reset command through communications.

Table 4-4: Warning messages from compiling

Category	Block or gate affected	Message	Description
Minor warning	Input	Input set to unused VO (SYMBOL_ID,Name,Sheet)	An Input symbol is using an unassigned Virtual Output
Major warning	Tag-Out	Tag-out not connected (TAG_ID,Sheet)	A Tag-Out symbol has no input
Major warning	All	Symbol not connected (SYMBOL_ID,Name,Sheet)	A symbol's input and/or output is not connected and is not part of a VO block. Draw the input and/or output to the block.
Minor warning	=VO	Virtual Output n using default name (VO_ID,Sheet)	The Assigned Virtual Output is using the default name. Change the name.
Minor warning	Input	Input using default name (SYMBOL_ID,Name,Sheet)	An Input symbol is using a Contact Input, Contact Output, Digital Element, FlexElement, or Digital Counter set to the default name. Change the name so that it is unique.
Setting warning	Input	Input using disabled feature (SYMBOL_ID,Name,Sheet)	An Input symbol is using a disabled Virtual Input, Contact Input, Digital Element, FlexElement, Digital Counter, Control Pushbutton, Programmable Pushbutton, Contact Output, or Protection/Monitoring Element. Enable it and try again.
Major warning	Input	Input set to OFF (SYMBOL_ID,Sheet)	An Input symbol is set to OFF
Major warning	Input	Input set to ON (SYMBOL_ID,Sheet)	An Input symbol is set to ON
Setting warning	Input	Contact Output Operate is OFF (SYMBOL_ID, Contacts)	The symbol block is using the default setting of OFF
Setting warning	Input	Contact Output Seal-In is OFF (SYMBOL_ID, Contacts)	The symbol block is using the default setting of OFF

4.4.1.5 Rapidly add logic blocks in sequence

Blocks are added by clicking an element then clicking in the drawing area, or by dragging and dropping the element onto the canvas. Blocks can be added rapidly in sequence, for example when you have inputs 1 to 10, without having to select the element each time.

To rapidly add logic blocks:

1. In Engineer, click **File > Preferences**. The window opens.
2. Click the **Editor** entry.
3. Enable the **Repeat Symbol** check box.
4. Click the **Ok** button to save and exit from the window.
5. In the logic diagram, select an element, then click in the drawing area to add it, click again to add a second box, and so on.

4.4.1.6 Connect two logic diagrams

When the logic is complex and requires two sheets, for example, these two sheets can be connected. By connecting them, the logic is continuous from one sheet to the next.

To connect two logic diagrams:

1. In the first sheet, click the **I/O Tokens** tab.
2. Scroll to the bottom, and click and drag the **Tag Out** element to the sheet where the next sheet is to connect.
3. Double-click the element and in the window that opens, give it a name, such as "To Sheet 2" or "To IO Sheet 2."

Figure 4-44: Connecting sheet 1 to sheet 2

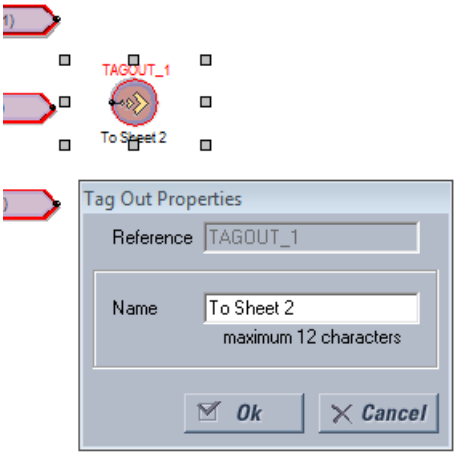

4. In the second sheet, click and drag the **Tag In** element to the sheet where the first sheet is to connect.
5. Double-click the element and in the window that opens, select the first sheet from the drop-down list to connect the two sheets.
6. Save the work.

4.4.1.7 Optimize the logic

The number of available FlexLogic entries depends on firmware, for example 515 or 1024 lines. The software can automatically optimize a logic diagram to reduce space and free up entries.

To optimize the logic:

1. In Engineer, under **File > Preferences**, select the **Compiler** option. Ensure that the **Optimize Compiled Output** option is enabled.
2. Run the compiler again, for example by clicking the **Compile** button at the bottom left of the software. The results display in the Optimization Summary. Changes also display when the FlexLogic Equation Editor is accessed. The logic diagram does not change. In the example shown, no lines were saved to free up space.

Figure 4-45: Code optimization results

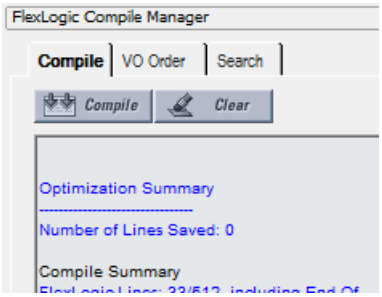

4.4.1.8 Change logic order

The order in which the FlexLogic is populated in the FlexLogic Equation Editor window depends on settings.

First, when automatic sorting is not enabled, the sequence in which the blocks were drawn is followed.

Second, the order in which equations are executed can be manually changed, as outlined here.

Third, automatic sorting can be set in preferences, as outlined here. It is enabled by default and means that an algorithm is implemented to give best results and quickest performance, For example, the block with the fastest execution time is entered first in the FlexLogic. When two block functions have the same execution time the block drawn first displays first in the FlexLogic. For example, drawing input 61 to output 61, then input 62 to output 62 causes the input/output 61 to be entered into the FlexLogic first. Automatic sorting takes precedence over manual sort; if you enable this option, manual sorting is not implemented.

To manually change logic order:

1. In the compile area, click the **VO Order** tab.
2. If the window is blank, click the **Refresh** button.
3. Select an entry and click the up or down arrow. To cancel any manual changes, click the **Sort** or **Refresh** button.
4. Recompile. The change is not executed or saved if automatic sorting is enabled.

Figure 4-46: Ordering FlexLogic entries

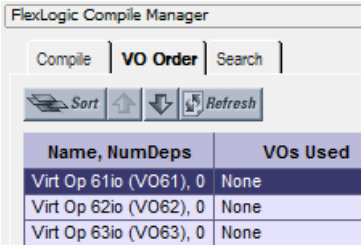

To set automatic sorting:

1. In Engineer, under **File > Preferences**, select the **Compiler** option. The **Automatically Sort VOs** option means that the block with the fastest execution time is entered first in the FlexLogic. When two block functions have the same execution time the block drawn first displays first in the FlexLogic. For example, drawing input 61 to output 61, then input 62 to output 62 causes the input/output 61 to be entered into the FlexLogic first.

4.4.1.9 Search logic

Items that can be searched in a logic diagram include gates, Input, Contact Input, Contact Output, Timer, Virtual Output, Tag In, Tag Out, and User-programmable LED. A search can be performed while designing or monitoring.

To search:

1. In the compiler area of Engineer, click the **Search** tab.
2. Use one of the following methods to set search criteria:
   - Select an element from the first drop-down list. Results display automatically.
   - Type in the second text string box, or select any of the 32 previous searches from the drop-down list. Click the **Search** button. Any results display.

   The search applies to all tabs, not just the active tab.
3. Double-click a search result to view the item.

Figure 4-47: Search function

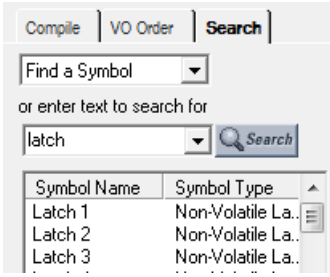

NOTE

You can also select an element from the drop-down list on the tool bar. It is then highlighted in the logic diagram.

4.4.1.10 Exclude sheet from compile

4

While designing the FlexLogic equations, entire sheets can be removed from the compile logic. This allows the user to test various schemes by placing schemes on separate sheets and including either sheet at compile time.

To exclude a sheet:

1. In the Logic Designer window, right-click the tab and select the **Exclude from Compile** option so that the check mark displays. When sheets are excluded, a message displays with each compile that "excluded sheets will not be reflected in the RPN." An excluded sheet is denoted with end brackets, similar to < Sheet 1 >.

Figure 4-48: Excluding a tab from compiling

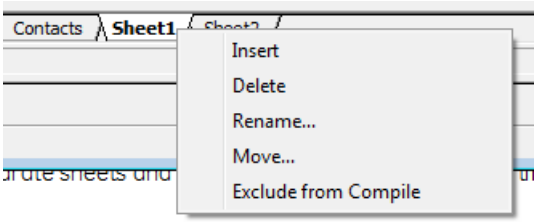

Figure 4-49: Tab excluded from compiling

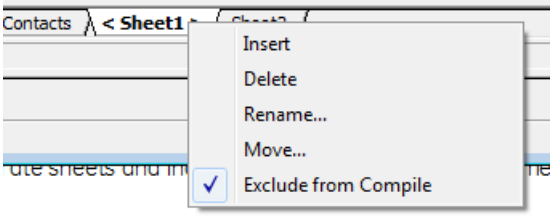

4.4.2 Send file to and from device

With the logic diagram created, compiled, and errors eliminated, the FlexLogic can be sent to a live device. And, conversely, a file from a live device can be added to the Offline Window area for additional work.

To send a file to a device:

1. In the Offline Window area of the software, right-click the device name and select the **Write Settings to Device** option. A prompt can appear that the URS file has been repaired; acknowledge the message.
2. When a window opens, select the device to which you want to send the file, then click the **Send** button and confirm. The order codes must match. The file is sent to the live device. Any errors can be viewed in the log file at the prompt.

To import a file from a device:

1. Close all open files in Engineer that relate to the device, else a message displays to that effect, for example to close the FlexLogic view associated with the file. When the file is not associated with a live device, a message displays to that effect; you need to identify the device to which you want to send the file. The order codes must match.
2. Right-click the device in the Online Window area and select the **Add Device to Offline Window** option. After you enter a name for the file, it is written to the Offline Window area.

4.4.3 Monitor logic

After creating the logic diagram, validating it, and uploading the FlexLogic to a device, the results from the device can be viewed.

The following checks are performed automatically when switching from design to monitoring, and prompts display when necessary:

- Verify that the order code of the linked relay matches the settings file
- Verify that the version of the linked relay matches the settings file
- Verify that the FlexLogic Equation Editor of the linked relay matches the settings file. Solution: Compile the FlexLogic logic diagram and send the settings file to the relay.
- Verify that the FlexLogic Timers of the linked relay match the settings file. Solution: Compile the FlexLogic logic diagram and send the settings file to the relay.
- If the settings file contains a serial number lock, then verify that the serial number of the linked relay matches the settings file

To view results:

1. In the Offline Window area of the software, expand the **Engineer** entry for the device.
2. Double-click the **Logic Designer** entry and **Compile** the logic.
3. Double-click the **Logic Monitor** entry, or click the **M** button in the toolbar at the top of the window. With successful launch, the logic displays and a green indicator displays at the bottom of the tab.

   When the file is not associated with a live device, a message displays to that effect; you need to identify the device to which you want to send the file. The order codes must match between the Offline Window and the Online Window.

   When the device is offline, a message indicates problems communicating with the device.

   When the devices are not synchronized, a message indicates the FlexLogic does not match the settings file. To send the offline file to the device, right-click the device name and select the **Write Settings to Device** option.

   When the state of a symbol is OFF, the symbol is shown in the default color or no color.

   When a symbol's state changes to ON, the symbol and connection line turns green.

   The state of some symbols can either be unknown or the state transitions faster than the update interval. For these two cases, the state of the symbol is considered 'UNKNOWN' and the symbol is outlined in red.

   The colors for the ON and Unknown state can be customized in the Preferences.

   The figure shows that the software is communicating with devices (square green indicator) and that a minor error is present (green box outline). In this case, the battery is weak and needs to be replaced. This can be viewed as the Replace Battery message on the front panel of the device and in the EnerVista software under **Actual Values > Front Panel > Front Panel** or **Display/Keypad**.

Figure 4-50: Monitoring a device, with minor error caused by weak battery

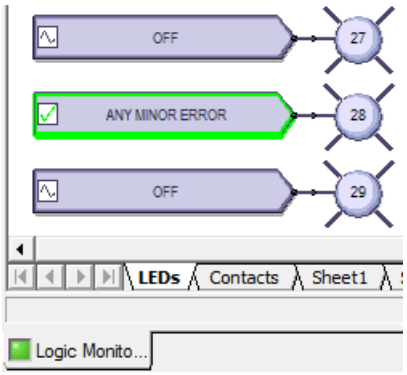

4.4.4 View front panel and print labels

This window displays the LEDs that are on the front panel. You can create labels and print them for the device. You do not use the window to add text labels and upload them to the device. Custom labeling is also outlined earlier in this chapter; see the Custom LED Labeling section.

To view the front panel:

1. In the Offline Window area of the software, expand the **Engineer** entry for the device.
2. Double-click the **Front Panel Report** entry. The report displays. The Device Summary is read from the settings file and cannot be changed. The LEDs and pushbuttons display below the summary.
3. To save the report, click **File > Save As**, enter a file name, and select the front panel report (FPR), JPG, or PDF format.

Figure 4-51: Front panel display in Engineer

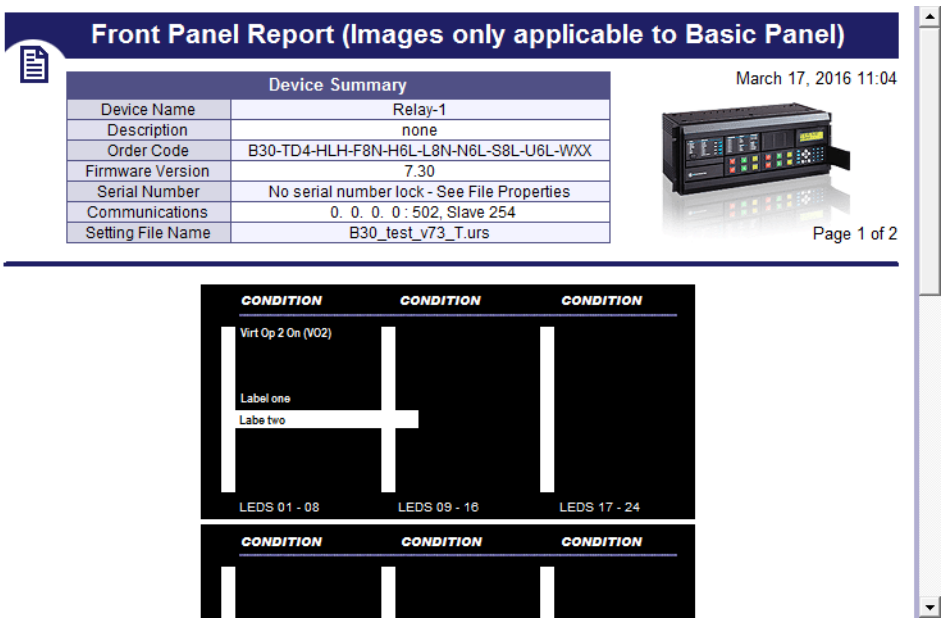

To print labels:

1. In the **Front Panel Report** window, double-click an LED or pushbutton and enter text.
2. To print the labels, click the **Print** icon on the tool bar.
3. To save the report and labels, click **File > Save As**, enter a file name, and select the FPR, JPG, or PDF format.
4. Use the instructions in the second tab of the window to add the labels to the physical device.

4.4.5 Generate connectivity report

This report displays basic information about a device, such as order code, port numbers, inputs and outputs. You can use it to create a PDF file of basic information. The report is based on CID and/or IID files, and not the system or full SCD. All device details including Remote Inputs, Remote Outputs, and Analog Inputs/Outputs are indicated, including quantities used and available.

To display a device report:

1. In the Offline Window area of the software, expand the **Engineer** entry for the device.
2. Double-click the **Device Connectivity Report** entry. The report displays.
3. To save as a PDF file, click **File > Save As**.

Figure 4-52: Device Connectivity Report

Device Connectivity Report

Device Information		
Filename / Device Name	**Order Code / Revision / Serial Nr.**	**File Details**
D30_test_v73.urs Relay-1	D30-U03-HLH-F8L-H6L 7.3x No serial number lock - See File Properties	Size: 2683 KB Last Modified Date: 15.11.2016 23:29:41 Path: D:\Users\ \Desktop\UR_Setting les\UR_Setting_files\D30_test_v73\

Device Details		
Physical Ports Available	**Port Settings**	**Services / Protocols**
RS232	RS232 Baud Rate: 115200	DNP 3.0
RS485	RS485 Baud Rate: 115200	IEC 60870-5-104
2 * 100BaseFX Eth, Multimode, SFP with LC	Port1 IP: 3. 94.244.210	IEC 61850
1 * 100BaseT Eth, Multimode, SFP with RJ-45	Port2 IP: 127. 0. 0. 1	EGD

4.4.6 Preferences

Preferences determine functionality. As such, you are encouraged to review them. This section outlines some options available in the menus and preference panels.

Access them in the **Logic Designer** panel under the **View** menu and under **File > Preferences**. The Logic Designer and Logic Monitor preferences are outlined here, not all preferences for a device.

4.4.6.1 View menu

View > Toolbar > Advanced Actions — Active when in Logic Designer. Toggles a toolbar to nudge, rotate, flip, or change the order of an element.

View > Show Unused Pins — Enable to display unconnected pins. Disable to eliminate unconnected pins from the view, for example when printing.

Figure 4-53: Unused pins on and off

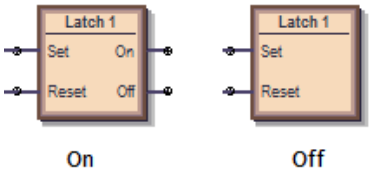

4.4.6.2 Logic designer

The path is **File > Preferences > Logic Designer**.

Workbook Setup

Size and Units

Size and Units — Changes the size of diagram area displayed in Engineer. If you set the size to be smaller than an existing logic diagram, the content is cut off.

4

WorkBook

Print Scale — The scale for logic diagram when printing. Scaling a large diagram to 200 percent, for example, results in the diagram being cut off.

Orphan Protection — When enabled, the printing output prevents Virtual Output circuits from spanning more than a single page. The largest Virtual Output circuit is scaled to fit on a single page and all remaining Virtual Output circuits are scaled so that all circuits are printed using the same scale.

Show Title Block — When enabled, places an information box at the bottom right of the diagram when printing. Enter the information in the **File Information** panel.

Show Sheet Name — When enabled, shows Sheet 1, Sheet 2, or any other name at the top of the logic diagram when printing.

Start Sheet On New Page — Places the sheet on the next page when printing.

Show Notes Selection — When other than None, prints the text from any information notes added to the document (under **Drawing Tools** tab > **Note**). The text is printed after the logic diagram.

File Information

The text entered here displays at the bottom right of a diagram when printing, provided that the **Show Title Block** option is enabled. Note the option to change the logo from the GE logo to your company logo.

Display

The panel sets how the element boxes display. The figure shows how an AND gate displays when the UR default, IEC, or ISO symbol type is selected.

Figure 4-54: AND gate varies by standard selected

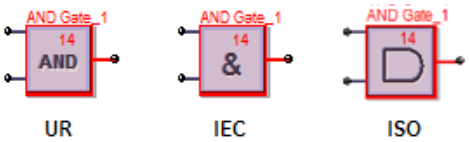

Symbol Style — **IEC, ISO, UR Setup** — Sets how the gates display in the logic diagram.

Symbol Color — When set to Black & White, only logic blocks with issues continue to display red.

Zoom Operation — Determines what happens when the **View > Zoom** functions are used. When set to Sheet Only and the zoom is changed, the single tab changes. When set to Workbook, all tabs change.

Editor

Repeat Symbol — Enable this feature to add element blocks rapidly in sequence, for example when you have inputs 1 to 10, without having to select the element each time. Select the element block from the toolbox, click the diagram, then continue to click to add additional blocks.

Use first available VO / Timer — When enabled and you copy and paste a virtual output or timer element, the numbering continues in sequence. For example, you copy timer 5 and paste it as timer 6. When disabled and you copy and paste a virtual output or timer element, the same number is used. For example, you copy timer 5 and paste it as timer 5.

Auto-Save Logic Designer every x minutes — Logic diagrams with changes are saved automatically according to this interval. The range is 5 minutes (default) to 30 minutes. With auto-save, the file extension of the saved file is .auto. This file remains until you save the file manually.

Auto Populate

These options work in the **Edit > Auto Populate Workbook** function.

VOs per Worksheet — When an existing settings file is opened in the Logic Designer, the Logic Designer populates the canvas and attempts to evenly distribute the Virtual Output circuits across multiple sheets. A value of 100 in this setting places all FlexLogic equations on a single sheet until there are 100, then the next ones are placed on another sheet. A value of 1 places each Virtual Output circuit on a separate sheet.

Show / **FlexLogic Merge** / **Show Unused** — If Show Contact Outputs and Show LEDs are selected, for example, the function places Contact Output and User-programmable LED symbols for settings that are configured. If you disable the LED check boxes, then the LED tab/sheet does not display when you next open the Logic Designer window. The settings apply to all products, not just the active window when it is next opened. Close then reopen the Logic Designer window for the setting to take effect.

Compiler

Show Warnings — Options to filter the messages that display when logic compiles.

Minor — Enable to display minor errors. An example is using the default values of an element added to the diagram, such as the name of the element. An example is "Warning: Virtual output xx using default name," for which you simply click into the element to rename it.

Major — Enable to display major errors. Examples are an input that does not have a corresponding output, using disabled features, and failing to connect a symbol. Fix these errors.

Setting — Enable to display error message related to settings, such as an improperly configured setting, such as using ON or OFF.

Automatically Sort VOs — When enabled, the logic is compiled with an algorithm to give best results and quickest performance, for example the fastest logic first. The fastest logic displays in the FlexLogic Equation Editor output as the first entries in the table. Use sorting when virtual outputs have dependencies on other virtual outputs. This setting takes precedence over order set manually in the **VO Order** tab in the compiler.
When disabled, the sequence in which the blocks were drawn is followed.

Optimize Compiled Output — With this option enabled, the software automatically optimizes a logic diagram to reduce space and free up FlexLogic entries. Run the compiler again, for example by clicking the **Compile** button at the bottom left of the software. The number of saved lines displays in the Optimization Summary. Changes also display when the FlexLogic Equation Editor is accessed. The logic diagram does not change.

4.4.6.3 Logic monitor

Display

The software displays the color specified when an element is on. There is no color when the element is off.

The software displays another color when the status cannot be determined and is unknown.

Timing

Timing Information can be displayed in the monitoring window. This timing information is only an approximate representation of how Engineer sees transitions. Use the device's Event Record to view accurate timing information.

The timing information can also be streamed to a comma-separated values (CSV) spreadsheet.

The timing information displayed and recorded can be filtered based on six categories. If a category is not selected, any timing information related to that category does not display and is not recorded to the CSV file.

Show Timing Information in Output Window — Enable to display times in the monitoring window.

Because of the update rate of the Logic Monitoring, the timing information cannot be used as an accurate representation of the events that occur within the relay. Use instead the device's event record. Timing information can be delayed by 30 seconds.

Save Timing Information to CSV File — Enable to write timing information in a spreadsheet. The timing information is recorded in a text file that uses commas to separate each of the fields. This file uses the extension CSV that is supported by any spreadsheet application.

Every change written to the CSV file requires a timestamp.

The format for the timing information in the output window is as follows:

yyyy/mm/dd hh:dd:ss
  devicename offline
yyyy/mm/dd hh:dd:ss
  devicename ONLINE
yyyy/mm/dd hh:dd:ss
  VO1: Virt Out 1- 0
  VI4: Virt In 4- 1
  DI3: Direct In 3- 0
  RI2: Remote In 2- 1
  H5a: Contact In 1- 1
  H1: Contact Output 1- 0

Data is only appended to the CSV file. The format for the data is as follows:

yyyy/mm/dd hh:dd:ss, devicename, offline
yyyy/mm/dd hh:dd:ss, devicename, ONLINE
yyyy/mm/dd hh:dd:ss, VO1: Virt Out 1, 0
yyyy/mm/dd hh:dd:ss, VI4: Virt In 4, 1
yyyy/mm/dd hh:dd:ss, DI3: Direct In 3, 0
yyyy/mm/dd hh:dd:ss, RI2: Remote In 2, 1
yyyy/mm/dd hh:dd:ss, H5a: Contact In 1, 1
yyyy/mm/dd hh:dd:ss, H1: Contact Output 1, 0

Options display for filtering, such as recording timing for Virtual Inputs and Outputs, but not Communications Status.

4.4.6.4 COMTRADE waveforms

Waveform files are viewable in the EnerVista software. The preferences are unrelated to Engineer and are outlined in the UR Family Communications Guide.

4.4.7 Toolbars

These are toggled in the **View > Toolbar** menu.

The UR symbols are displayed for the toolbox icons. They change when the default setting is changed to IEC or ISO symbols. The symbols displayed in the toolbox also vary by firmware version, reflecting what is supported for each release.

4.4.7.1 FlexLogic Editor toolbar

	New Device	Create a new settings file
	Open File	Open an existing settings file in the URS, CID, or IID format
	Save FlexLogic	Save the Logic Designer diagram
	PDF Report	Create a PDF document from Logic Designer diagram(s). Settings can be changed under **File > Preferences > Workbook Setup**.
	Toggle Compile Window	Display or hide the compile window area
	Sort Order	Select to change the sort order of the Virtual Output list to the right of the icon. Virtual Outputs can be sorted numerically in ascending and descending order based on numbers and names.
Select VO to View (1-96)	Select VO to View (x - x)	Select a Virtual Output to locate and select it in the workbook. Each Virtual Output listed also contains the name of the sheet where the Virtual Output is located.
	Edit Mode Logic Designer	Switch to Logic Designer mode
	Monitor Mode Logic Monitor	Switch to Logic Monitor mode
	Turn On ALL Communications	Turn on all communications to all Logic Designer diagrams that are in the monitoring mode. Default upon each launch of Engineer.
	Turn Off All Communications	Turn off all communications to all Logic Designer diagrams that are in the monitoring mode. This is a legacy function for serial communication to turn off communication to devices. Turning off communication applies to the current session only. When you re-launch the EnerVista software, communication is on by default.

4.4.7.2 Token Toolbox

Drawing Tools

Line	Draw a line. Click and drag to draw.
Polyline	Draw multiple joined lines. Click and drag for each line. Double-click to finish.

Polygon	Draw multi-sided object. Click for each line. Double-click to finish.
Rectangle	Draw four-sided object. Click and drag to draw.
Polycurve	Draw multiple curves. Click for each line. Double-click to finish.
Closed Curve	Draw multiple, closed curves. Click for each line. Double-click to finish.
Ellipse	Draw oval or circle. Click and drag to draw.
Text	Add text box with rectangle around it. Click to add. Double-click it to change text.
Image	Add figure. Select file in the window that opens, then click on diagram canvas to add figure.
Note	Add note icon and text. Click to add. Double-click to edit the title and text.

I/O Tokens

These are parts used in FlexLogic equations. They are the inputs and outputs of the Virtual Output equations. The display can vary from that shown here.

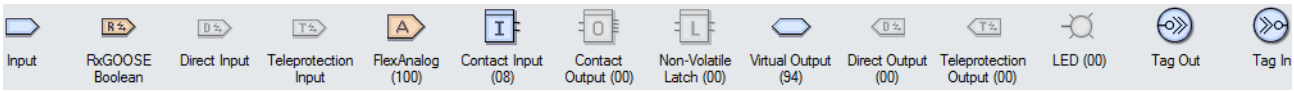

Input	Input symbol that can be configured to any FlexLogic operand value
RxGOOSE Boolean	Remote inputs from other devices
Direct Input	Input from another UR device. Teleprotection inputs/outputs and direct inputs/outputs are mutually exclusive and cannot be used simultaneously.
Teleprotection Input	Teleprotection inputs/outputs and direct inputs/outputs are mutually exclusive and cannot be used simultaneously.

FlexAnalog (100)	FlexAnalog symbol that can be used as the input to a FlexElement or use the FlexAnalog symbol to monitor an actual value when in logic Monitoring mode
Contact Input (24)	Contact Input Gate is similar to the Input symbol but is restricted to the operands associated with a Contact Input
Contact Output (00)	Contact Output Gate is similar to the Input symbol but is restricted to the operands associated with a Contact Output. The Operate and Seal-In settings can be configured graphically.
Non-Volatile Latch (00)	The Non-Volatile Latch is similar to the Input symbol but is restricted to the operands associated with a Non-Volatile Latch. The Set and Reset settings can be configured graphically.
Virtual Output (96)	The final output of an equation is a numbered register called a virtual output. Virtual outputs can be used as an input operand in any equation, including the equation that generates the output, as a seal-in or other type of feedback.
Remote Output (00)	Place and configure a Remote Output. The UR's order code and firmware version then determine the availability of the Remote Output.
Direct Output (00)	Place and configure a Direct Output. The UR's order code and firmware version then determine the availability of the Direct Output to another UR device.
Teleprotection Output (00)	Place and configure a Teleprotection Output. The UR's order code and firmware version then determine the availability of the Teleprotection Output.
LED (00)	Place a User Programmable LED in the Logic Designer diagram
Tag Out	A Tag Out can be used in 1 of 2 ways. The first use of the Tag Out is to break up logic that needs to span several sheets. The second use of the Tag Out is to associate a frequently used block of code with the Tag Out and then repeatedly use the same block of code using a Tag In. When a Tag Out is referenced more than once, the Tag Out is replaced with a Virtual Output during the compile phase.
Tag In	Tag-In can is used to reference an existing Tag-Out. It joins another diagram to a previous diagram.

Boolean Tokens

These symbols are used to create FlexLogic Equations. Use them as intermediate logic for the Virtual Output equations. The display can vary from that shown here.

OR Gate	Place an OR gate in the Logic Designer diagram. Only one action needs to occur. Any function input on the left side satisfies the condition. The number of inputs is configurable from two to 16.
AND Gate	Place an AND gate in the Logic Designer diagram. Multiple actions need to occur. All functions input on the left side are required to satisfy the condition. The number of inputs is configurable from two to 16.
NOR Gate	Place a NOR gate in the Logic Designer diagram. Gives the value of one when all input operands have a value of zero and otherwise gives a value of zero. It gives an output signal when there are no input signals. An inverter that reverses the logic state. The number of inputs is configurable from two to 16.
NAND Gate	Place a NAND gate in the Logic Designer diagram. Gives the value of zero when all input operands have a value of one and otherwise gives a value of one. It gives an output signal until all signals are present on its inputs. An inverter that reverses the logic state. The number of inputs is configurable from two to 16.
XOR Gate	Place a XOR gate in the Logic Designer diagram, which is two exclusive OR gates. Only one action needs to occur. If there are two inputs or there is no input, there is no output.
NOT Gate	Place a NOT gate in the Logic Designer diagram. Gives the value of one when the input operand has a value of zero and otherwise gives a value of zero. It gives an output signal when there is no input signal. An inverter that reverses the logic state.
Latch	Place a latch in the Logic Designer diagram. A latch has two inputs and one output. One input is the Set input, and other input is the Reset input.
Positive One Shot	Place a positive one shot symbol that responds to a positive going edge in the Logic Designer diagram. A "one shot" is a single input gate that generates a pulse ins response to an edge on the input.
Negative One Shot	Place a negative one shot symbol that responds to a negative going edge in the Logic Designer diagram
Dual One Shot	Place a positive one shot and a negative one shot symbol in the Logic Designer diagram
Timer (32)	Place a timer in the Logic Designer diagram

Elements

These blocks configure properties of the element or use element operands as input to FlexLogic equations.

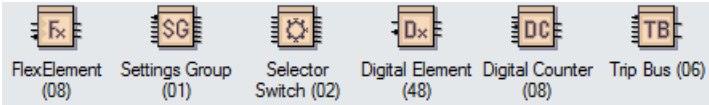

FlexElement (08)	Place and configure a FlexElement. A FlexElement is a universal comparator used to monitor any analog actual value calculated by the relay or a net difference of any two analog actual values of the same type.
Settings Group (01)	Place and configure the Settings Group settings
Selector Switch (02)	Place and configure a Selector Switch element. Firmware version determines feature availability. The Selector Switch element is intended to replace a mechanical selector switch. Typical applications include setting group control or control of multiple logic sub-circuits in user-programmable logic. The element provides for two control inputs.
Digital Element (48)	Place and configure a Digital Element. A Digital Element can monitor any FlexLogic operand and present a target message and/or enable events recording depending on the output operand state.
Digital Counter (08)	Place and configure a Digital Counter element. A Digital Counter counts the number of state transitions from Logic 0 to Logic 1. The counter is used to count operations such as the pickups of an element.

4

4.4.7.3 Basic Actions toolbar

	Select	Select components. Click one component and hold down the **CTRL** key to select others. Or click and drag an area that contains multiple components to select.
	Edit Vertices	Shows vertices points for the component selected (if the component support vertices manipulation)
	Properties	Shows the properties of the selected component
	Zoom Normal	Zoom in and center the screen to the spot selected
	Zoom to Fit	Zoom in to a magnitude that fits your entire schema layout on your entire screen
	Zoom Custom	Zoom in on the components that you have selected
	Pan	Move the viewable area of your screen around the schema. To activate, select this tool and then place the hand icon over and part of your schema. Click and drag the hand in a direction to move around the schema.
	Align Top, Middle, Bottom	Align the selected components to the top, middle, or bottom of the reference component
	Align Left, Center, Right	Align the selected components to the left, middle, or right of the reference component
	Space Across	Evenly space the selected components across a horizontal axis, starting from the far left component and ending at the far right component
	Space Down	Evenly space the selected components across a vertical axis, starting from the top component and ending at the bottom component
	Same Width	Set the width of the selected components to the same width as the reference component
	Same Height	Set the height of the selected components to the same height as the reference component

	Same Size	Set the width and height of the selected components to the same width and height of the reference component

4.4.7.4 Advanced Actions toolbar

Only basic objects (lines, rectangles, ellipses) can be rotated and flipped.

Only objects from the Drawing Toolbar can be structured (grouped, ungrouped, forward, backward).

	Nudge Up, Down, Left, Right	Moves selected component one pixel upward, downward, left, right
	Rotate	Rotates selected component freely. Once selected, put your mouse cursor over the component and move the component clockwise or counter-clockwise depending on what you need.
	Rotate Left, Right	Rotates selected component 90 degrees counter-clockwise or clockwise
	Flip Vertical	Flips the selected component on the vertical axis
	Flip Horizontal	Flips the selected component on the horizontal axis
	Group, Ungroup	Combines all selected components into one combined entity. Ungroups them into separate components.
	Front, Back	Moves current components to the absolute front or back of all viewable layers
	Forward, Backward	Moves current components on layer higher or lower than its original layer hierarchy

B30 Bus Differential System

Chapter 5: Settings

This chapter outlines front panel and/or software settings. The relay is not taken out of service when saving settings; the relay is taken out of service when a settings file is written to it. Settings can be viewed remotely in a web browser by entering the IP address of the relay, accessing the **Device Information Menu** option, then the **Front-Panel Display Report** option.

When indicated that a restart is required for a setting change to take effect, use the **Maintenance > Reboot Relay Command** in the software.

5.1 Settings menu

■■ SETTINGS ■■ PRODUCT SETUP	⇔	■ SECURITY ■	See page 5-7
⇩	⇕	■ DISPLAY ■ PROPERTIES	See page 5-25
	⇕	■ CLEAR RELAY ■ RECORDS	See page 5-26
	⇕	■ COMMUNICATIONS ■	See page 5-27
	⇕	■ MODBUS USER MAP ■	See page 5-95
	⇕	■ REAL TIME ■ CLOCK	See page 5-95
	⇕	■ USER-PROGRAMMABLE ■ FAULT REPORTS	See page 5-100
	⇕	■ OSCILLOGRAPHY ■	See page 5-101
	⇕	■ DATA LOGGER ■	See page 5-103
	⇕	■ DEMAND ■	See page 5-104

	⇕	■ USER-PROGRAMMABLE ■ LEDS	See page 5-106
	⇕	■ USER-PROGRAMMABLE ■ SELF TESTS	See page 5-109
	⇕	■ CONTROL ■ PUSHBUTTONS	See page 5-110
	⇕	■ USER-PROGRAMMABLE ■ PUSHBUTTONS	See page 5-111
	⇕	■ FLEX STATE ■ PARAMETERS	See page 5-116
	⇕	■ USER-DEFINABLE ■ DISPLAYS	See page 5-117
	⇕	■ DIRECT I/O ■	See page 5-119
	⇕	■ TELEPROTECTION ■	See page 5-125
⇧	⇧	■ INSTALLATION ■	See page 5-126
■■ REMOTE RESOURCES ■■	⇔	■ ■	Access in EnerVista See page 5-127
■■ SETTINGS ■■ SYSTEM SETUP	⇔	■ AC INPUTS ■	See page 5-128
⇩	⇕	■ POWER SYSTEM ■	See page 5-129
	⇕	■ SIGNAL SOURCES ■	See page 5-130
	⇕	■ BREAKERS ■	See page 5-132
	⇕	■ SWITCHES ■	See page 5-137
	⇕	■ FLEXCURVES ■	See page 5-140
⇧	⇧	■ BUS ■	See page 5-147
■■ SETTINGS ■■ FLEXLOGIC	⇔	■ FLEXLOGIC ■ EQUATION EDITOR	See page 5-164
⇩	⇕	■ FLEXLOGIC ■ TIMERS	See page 5-164
	⇕	■ FLEXELEMENTS ■	See page 5-164
⇧	⇧	■ NON-VOLATILE ■ LATCHES	See page 5-168
■■ SETTINGS ■■ GROUPED ELEMENTS	⇔	■ SETTING GROUP 1 ■	See page 5-169
⇩	⇕	■ SETTING GROUP 2 ■	
	⇕	■ SETTING GROUP 3 ■	

	⇕	■ SETTING GROUP 4 ■	
	⇕	■ SETTING GROUP 5 ■	
⇧	⇧	■ SETTING GROUP 6 ■	
■■ SETTINGS ■■ CONTROL ELEMENTS	⇔	■ TRIP BUS ■	See page 5-206
⇩	⇕	■ SETTING GROUPS ■	See page 5-208
	⇕	■ SELECTOR SWITCH ■	See page 5-209
	⇕	■ DIGITAL ELEMENTS ■	See page 5-216
	⇕	■ DIGITAL COUNTERS ■	See page 5-219
⇧	⇧	■ MONITORING ■ ELEMENTS	See page 5-221
■■ SETTINGS ■■ INPUTS / OUTPUTS	⇔	■ CONTACT INPUTS ■	See page 5-236
⇩	⇕	■ VIRTUAL INPUTS ■	See page 5-238
	⇕	■ CONTACT OUTPUTS ■	See page 5-239
	⇕	■ VIRTUAL OUTPUTS ■	See page 5-243
	⇕	■ RESETTING ■	See page 5-243
	⇕	■ DIRECT INPUTS ■	See page 5-243
	⇕	■ DIRECT OUTPUTS ■	See page 5-244
⇧	⇧	■ TELEPROTECTION ■	See page 5-247
■■ SETTINGS ■■ TRANSDUCER I/O	⇔	■ DCMA INPUTS ■	See page 5-249
⇩	⇕	■ RTD INPUTS ■	See page 5-250
⇧	⇧	■ DCMA OUTPUTS ■	See page 5-251
■■ SETTINGS ■■ TESTING	⇔	TEST MODE FUNCTION: Disabled	Range: Disabled, Test-Blocked, Test See page 5-254
⇩	⇕	TEST MODE FORCING: On	Range: FlexLogic operand See page 5-255
	⇕	■ FORCE CONTACT ■ INPUTS	See page 5-255
⇧	⇧	■ FORCE CONTACT ■ OUTPUTS	See page 5-256

5.2 Overview

5.2.1 Introduction to elements

For URs, the term *element* is used to describe a feature that is based around a comparator. The comparator is provided with an input (or set of inputs) that is tested against a programmed setting (or group of settings) to determine if the input is within the defined range that sets the output to logic 1, also referred to as *setting the flag*. A single comparator can make multiple tests and provide multiple outputs. For example, the time overcurrent comparator sets a pickup flag when the current input is above the setting and sets an operate flag when the input current has been at a level above the pickup setting for the time specified by the time-current curve settings. All comparators use analog actual values as the input.

NOTE

An exception to this rule is digital elements, which use logic states as inputs.

Elements are arranged into two classes, *grouped* and *control*. Each element classed as a grouped element is provided with six alternate sets of settings, in setting groups numbered 1 through 6. The performance of a grouped element is defined by the setting group that is active at a given time. The performance of a control element is independent of the selected active setting group.

The main characteristics of an element are shown on a logic diagram. This includes the inputs, settings, fixed logic, and the output operands generated. The previous chapter explains how to read a logic diagram, and the abbreviations used in a diagram are defined in the Abbreviations chapter.

Some settings are specified in per-unit (pu) calculated quantities:

pu quantity = (actual quantity) / (base quantity)

Where the current source is from a single current transformer (CT), the *base quantity* is the nominal secondary or primary current of the CT. Use the secondary current base to convert per-unit settings to/from a secondary current value, and use the primary current base to convert to/from a primary current value.

Where the current source is the sum of two or more CTs with different nominal primary current, the primary base quantity is the largest nominal primary current. For example, if CT1 = 300 / 5 A and CT2 = 100 / 1 A, then in order to sum these, CT2 is scaled to the CT1 ratio. In this case, the base quantity is 300 A primary, 5 A secondary for CT1, and 300/(100/1) = 3 A secondary for CT2.

For voltage elements, the primary base quantity is the nominal phase-to-phase primary voltage of the protected system provided that the VT ratio setting is set to the nominal ratio of the VTs and the secondary voltage setting is set to the phase-to-phase voltage seen by the relay when the voltage of the protected system in nominal. The UR uses the convention that nominal voltages in a three-phase system are phase-to-phase voltages.

For example, on a system with a 13.8 kV nominal primary voltage, the base quantity is 13800 V. With 14400:120 V delta-connected VTs, the secondary base quantity and secondary voltage setting is:

$$\frac{13800}{14400} \times 120 = 115 \text{ V} \qquad \textbf{Eq. 5-1}$$

For wye-connected VTs, the primary and secondary base quantities are as before, but the secondary voltage setting (here a phase-to-ground value) is:

$$\frac{13800}{14400} \times \frac{120}{\sqrt{3}} = 66.4 \text{ V} \qquad \textbf{Eq. 5-2}$$

Many settings are common to most elements, outlined as follows:

- **FUNCTION setting** — This setting programs the element to operate when selected as “Enabled.” The factory default is “Disabled.” Once “Enabled,” any element associated with the function becomes active and all options become available.
- **NAME setting** — This setting is used to uniquely identify the element.

- **SOURCE setting** — This setting is used to select the AC source to be monitored. See the Introduction to AC Sources section later.
- **PICKUP setting** — For simple elements, this setting is used to program the level of the measured parameter above or below which the pickup state is established. In more complex elements, a set of settings can be provided to define the range of the measured parameters that cause the element to pick up.
- **PICKUP DELAY setting** — This setting sets a time-delay-on-pickup, or on-delay, for the duration between the pickup and operate output states.
- **RESET DELAY setting** — This setting is used to set a time-delay-on-dropout, or off-delay, for the duration between the operate output state and the return to logic 0 after the input transits outside the defined pickup range.
- **BLOCK setting** — The default output operand state of all comparators is a logic 0 or "flag not set." The comparator remains in this default state until a logic 1 is asserted at the RUN input, allowing the test to be performed. If the RUN input changes to logic 0 at any time, the comparator returns to the default state. The RUN input is used to supervise the comparator. The BLOCK input is used as one of the inputs to RUN control.
- **TARGET setting** — This setting is used to define the operation of an element target message. When set to "Disabled," no target message or illumination of a faceplate LED indicator is issued upon operation of the element. When set to "Self-Reset," the target message and LED indication follow the operate state of the element and self-resets once the operate element condition clears. When set to "Latched," the target message and LED indication remains visible after the element output returns to logic 0 until a RESET command is received by the relay.
- **EVENTS setting** — This setting is used to control whether the pickup, dropout, or operate states are recorded by the event recorder. When set to "Disabled," element pickup, dropout, or operate are not recorded as events. When set to "Enabled," events are created for

  <Element> PKP (pickup)
  <Element> DPO (dropout)
  <Element> OP (operate)

  The DPO event is created when the measure and decide comparator output transits from the pickup state (logic 1) to the dropout state (logic 0). This can happen when the element is in the operate state if the reset delay time is not zero.

  Not every operand of a given element in a UR relay generates events, only the major output operands. Elements, asserting output per phase, log operating phase output only, without asserting the common three-phase operand event.

5.2.2 Introduction to AC sources

5.2.2.1 Background

A mechanism called a *source* configures the routing of CT and VT input channels to measurement sub-systems. Sources, in the context of UR series relays, refer to the logical grouping of current and voltage signals such that one source contains all the signals required to measure the load or fault in a particular power apparatus. A given source can contain all or some of the following signals: three-phase currents, single-phase ground current, three-phase voltages, and an auxiliary voltage from a single VT for checking for synchronism.

The basic idea of an AC source is to select a point on the power system where the voltages and currents are of interest. To illustrate the concept of sources, as applied to current inputs only, consider the breaker-and-a-half scheme that follows. (The breaker-and-a-half scheme is used for illustrative purposes and is available on select UR products.) In this application, the current flows as shown by the arrows. Some current flows through the upper bus bar to some other location or power equipment, and some current flows into transformer winding 1. The current into winding 1 is the phasor sum (or difference) of the currents in CT1 and CT2 (whether the sum or difference is used depends on the relative polarity of the CT connections). The same considerations apply to transformer winding 2. The protection elements require access to the net current for transformer protection, but some elements can need access to the individual currents from CT1 and CT2.

Figure 5-1: Breaker-and-a-half scheme

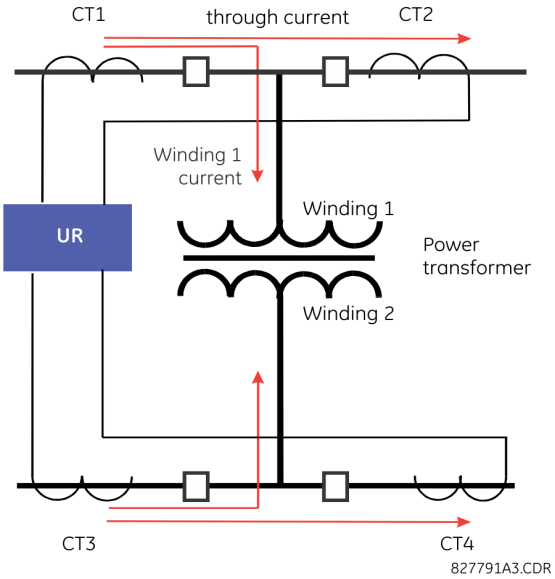

In conventional analog or electronic relays, the sum of the currents is obtained from an appropriate external connection of all CTs through which any portion of the current for the element being protected can flow. Auxiliary CTs are required to perform ratio matching if the ratios of the primary CTs to be summed are not identical. In the UR series of relays, provisions have been included for all the current signals to be brought to the UR device where grouping, ratio correction, and summation are applied internally via configuration settings.

A major advantage of using internal summation is that the individual currents are available to the protection device, for example as additional information to calculate a restraint current, or to allow the provision of additional protection features that operate on the individual currents, such as breaker failure.

Given the flexibility of this approach, it becomes necessary to add configuration settings to the platform to allow the user to select which sets of CT inputs are to be added to form the net current into the protected device.

The internal grouping of current and voltage signals forms an AC source. This source can be given a specific name through the settings and becomes available to protection and metering elements in the UR platform. Individual names can be given to each source to help identify them for later use. For example, in the scheme shown in the preceding figure, the user configures one source to be the sum of CT1 and CT2 and can name this source as "Wdg1 I."

Once the sources have been configured, the user has them available as selections for the choice of input signal for the protection elements and as metered quantities.

5.2.2.2 CT/VT module configuration

CT and voltage transformer (VT) input channels are contained in CT/VT modules. The type of input channel can be phase/neutral/other voltage, phase/ground current, or sensitive ground current. The CT/VT modules calculate total waveform RMS levels, fundamental frequency phasors, symmetrical components, and harmonics for voltage or current, as allowed by the hardware in each channel. These modules can calculate other parameters as directed by the CPU module.

A CT/VT module contains up to eight input channels, numbered 1 through 8. The channel numbering corresponds to the module terminal numbering 1 through 8 and is arranged as follows. Channels 1, 2, 3, and 4 are always provided as a group, hereafter called a "bank," and all four are either current or voltage, as are channels 5, 6, 7, and 8. Channels 1, 2, 3 and 5, 6, 7 are arranged as phase A, B, and C respectively. Channels 4 and 8 are either another current or voltage.

Banks are ordered sequentially from the block of lower-numbered channels to the block of higher-numbered channels, and from the CT/VT module with the lowest slot position letter to the module with the highest slot position letter, as follows.

Increasing slot position letter -->		
CT/VT module 1	**CT/VT module 2**	**CT/VT module 3**
< bank 1 >	< bank 3 >	< bank 5 >
< bank 2 >	< bank 4 >	< bank 6 >

The UR platform allows for a maximum of six sets of three-phase voltages and six sets of three-phase currents. The result of these restrictions leads to the maximum number of CT/VT modules in a chassis to three. The maximum number of sources is six. A summary of CT/VT module configurations is as follows.

Item	**Maximum number**
CT/VT Module	3
CT Bank (3 phase channels, 1 ground channel)	6
VT Bank (3 phase channels, 1 auxiliary channel)	3

5.2.2.3 CT/VT input channel configuration

Upon relay startup, configuration settings for every bank of current or voltage input channels in the relay are generated automatically from the order code. Within each bank, a channel identification label is assigned automatically to each bank of channels in a given product. The *bank* naming convention is based on the physical location of the channels, required by the user to know how to connect the relay to external circuits. Bank identification consists of the letter designation of the slot in which the CT/VT module is mounted as the first character, followed by numbers indicating the channel, either 1 or 5. See the HardFiber instruction manual for designations of HardFiber voltage and current banks.

For three-phase channel sets, the number of the lowest numbered channel identifies the set. For example, F1 represents the three-phase channel set of F1/F2/F3, where F is the slot letter and 1 is the first channel of the three channels.

Upon startup, the CPU configures the settings required to characterize the current and voltage inputs, and it displays them in the appropriate section in the sequence of the banks (as described earlier) as follows for a maximum configuration: F1, F5, M1, M5, U1, and U5.

5

5.3 Product setup

5.3.1 Security

5.3.1.1 Security overview

The following security features are available:

- Password security — Basic security present by default
- EnerVista security — Role-based access to various EnerVista software screens and configuration elements. The feature is present by default in the EnerVista software.
- CyberSentry security — Advanced security available using a software option. When purchased, the option is automatically enabled, and the default Password security and EnerVista security are disabled.

Lost password

If all passwords are lost, reset the unit to default values. Follow the instructions outlined later for **COMMANDS ⇨⇩ RELAY MAINTENANCE ⇨ SERVICE COMMAND**. Note that the relay is reset to default values, not just the passwords.

Then for CyberSentry, change the default password of ChangeMe1# as outlined in the Set Up CyberSentry and Change Default Password section at the end of the Installation chapter.

Password requirements

A user account requires an alpha-numeric password that meets the following requirements:

- Password is case-sensitive
- Password cannot contain the user account name or parts of the user account that exceed two consecutive characters
- Password must be 8 to 20 characters in length
- Password must contain characters from all of the following categories:
  - English uppercase characters (A through Z)
  - English lowercase characters (a through z)
  - Base 10 digits (0 through 9)
  - Non-alphabetic characters (for example, ~, !, @, #, $,%, &)

5.3.1.2 Password security

SETTINGS ⇨ PRODUCT SETUP ⇨ SECURITY

■ SECURITY ■	⇔	ACCESS LEVEL: Restricted	Range: Restricted, Command, Setting, Factory Service (for factory use only)
	⇩	■ CHANGE LOCAL ■ PASSWORDS	See page 5-9
	⇩	■ CHANGE REMOTE ■ PASSWORDS	See page 5-10
	⇩	■ ACCESS ■ SUPERVISION	See page 5-10
	⇩	■ DUAL PERMISSION ■ SECURITY ACCESS	See page 5-11
	⇧	PASSWORD ACCESS EVENTS: Disabled	Range: Disabled, Enabled

The B30 supports password entry from a local or remote connection.

Local access is defined as access to settings or commands via the faceplate. This includes both keypad entry and the RS232 port. Remote access is defined as access to settings or commands via any rear communications port. This includes both Ethernet and RS485 connections. Any change to the local or remote password enables this functionality.

NOTE

For a relay without a CyberSentry software option, any user can activate the **RESET** button without password entry.

ACCESS LEVEL — The "Restricted" option means that settings and commands can be accessed, but there is no access to factory configuration. Access automatically reverts to the Restricted level according to the access level timeout setting values. The access level is set to Restricted when control power is cycled.

The "Factory Service" level is not available and intended for factory use only.

There are two user security access levels, setting and command, for which you can set a password for each. Use of a password for each level controls whether users can enter commands or change settings. Another option is to specify setting and/or command access for individual user accounts.

- **Setting** — Allows the user to make any changes to any of the setting values:
  - Changing any setting
  - Test mode operation
- **Command** — Restricts the user from making any settings changes, but allows the user to perform the following operations:
  - Changing the state of virtual inputs

- Clearing the event records
- Clearing the oscillography records
- Changing the date and time
- Clearing the breaker arcing current
- Clearing the data logger
- Clearing the user-programmable pushbutton states

When entering a settings or command password via EnerVista or any serial interface, the user must enter the corresponding connection password. If the connection is to the back of the B30, the remote password must be used. If the connection is to the RS232 port of the faceplate, the local password must be used.

The local setting and command sessions are initiated by the user through the front panel display and are disabled either by the user or by timeout (via the setting and command level access timeout settings). The remote setting and command sessions are initiated by the user through the EnerVista software and are disabled either by the user or by timeout.

The state of the session (local or remote, setting or command) determines the state of the following FlexLogic operands:

- ACCESS LOC SETG OFF — Asserted when local setting access is disabled
- ACCESS LOC SETG ON — Asserted when local setting access is enabled
- ACCESS LOC CMND OFF — Asserted when local command access is disabled
- ACCESS LOC CMND ON — Asserted when local command access is enabled
- ACCESS REM SETG OFF — Asserted when remote setting access is disabled
- ACCESS REM SETG ON — Asserted when remote setting access is enabled
- ACCESS REM CMND OFF — Asserted when remote command access is disabled
- ACCESS REM CMND ON — Asserted when remote command access is enabled

NOTE

A command or setting write operation is required to update the state of the remote and local security operands listed.

PASSWORD ACCESS EVENTS — This setting allows recording of password access events in the event recorder.

Change local passwords

SETTINGS ⇨ PRODUCT SETUP ⇨ SECURITY ⇨⇩ CHANGE LOCAL PASSWORDS

■ **CHANGE LOCAL PASSWORDS**	⇔	**CHANGE SETTING PASSWORD: No**	Range: No, Yes
	⇧	**CHANGE COMMAND PASSWORD: No**	Range: No, Yes

As outlined in the previous section, there are two user security access levels, setting and command. Use of a password for each level controls whether users can enter commands or change settings.

Proper password codes are required to enable each access level. When a **CHANGE COMMAND PASSWORD** or **CHANGE SETTING PASSWORD** setting is programmed to "Yes" via the front panel interface, the following message sequence is invoked:

1. ENTER NEW PASSWORD: _____.
2. VERIFY NEW PASSWORD: _____.
3. NEW PASSWORD HAS BEEN STORED.

To gain write access to a "Restricted" setting, program the **ACCESS LEVEL** setting in the main security menu to "Setting" and then change the setting, or attempt to change the setting and follow the prompt to enter the programmed password. If the password is correctly entered, access is allowed. Access automatically reverts to the "Restricted" level according to the access level timeout setting values and when power is cycled.

NOTE

If the setting and command passwords are identical, then this one password allows access to both commands and settings.

If a remote connection is established, local passcodes are not visible.

Change remote passwords

Proper passwords are required to enable each command or setting level access, which are explained in the previous section.

SETTINGS ⇨ PRODUCT SETUP ⇨ SECURITY ⇨⇩ CHANGE REMOTE PASSWORDS

■ CHANGE REMOTE ■ PASSWORDS	⇔	CHANGE SETTING PASSWORD: No	Range: No, Yes
	⇧	CHANGE COMMAND PASSWORD: No	Range: No, Yes

To set the command or setting password in EnerVista:

1. In the EnerVista software or from the front panel, navigate to **Settings > Product Setup > Security** menu item to open the remote password settings window.
2. Click the command or setting password **Change** button.
3. Enter the new password in the **New Password** field. Requirements are outlined in the Password Requirements section earlier in this chapter. When an original password has already been used, enter it in the **Enter Password** field and click the **Send Password to Device** button.
4. Re-enter the password in the **Confirm Password** field.
5. Click the **OK** button. The password is checked to ensure that it meets requirements.

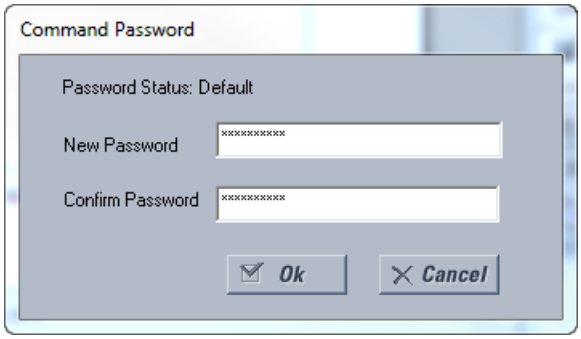

NOTE

If you establish a local (serial) connection to the relay, you cannot view remote passcodes.

Access supervision

SETTINGS ⇨ PRODUCT SETUP ⇨ SECURITY ⇨⇩ ACCESS SUPERVISION

■ ACCESS ■ SUPERVISION	⇔	■ ACCESS LEVEL ■ TIMEOUTS	See below
	⇩	INVALID ATTEMPTS BEFORE LOCKOUT: 3	Range: 2 to 5 in steps of 1
	⇧	PASSWORD LOCKOUT DURATION: 5 min	Range: 5 to 60 minutes in steps of 1

This menu displays when the **ACCESS LEVEL** setting is other than Restricted or Command.

The following access supervision settings are available.

INVALID ATTEMPTS BEFORE LOCKOUT — This setting specifies the number of times that an incorrect password can be entered within a three-minute time span before lockout occurs. When lockout occurs, the LOCAL ACCESS DENIED or REMOTE ACCESS DENIED FlexLogic operands are set to "On." These operands are returned to the "Off" state upon expiration of the lockout.

PASSWORD LOCKOUT DURATION — This setting specifies the time that the B30 locks out password access after the number of invalid password entries specified by the **INVALID ATTEMPTS BEFORE LOCKOUT** setting has occurred.

The B30 provides a means to raise an alarm upon failed password entry. If password verification fails while accessing a password-protected level of the relay (either settings or commands), the UNAUTHORIZED ACCESS FlexLogic operand is asserted. The operand can be programmed to raise an alarm via contact outputs or communications. This feature can be used to protect against both unauthorized and accidental access attempts.

The UNAUTHORIZED ACCESS operand is reset with the **COMMANDS ⇨⇩ CLEAR RECORDS ⇨⇩ RESET UNAUTHORIZED ALARMS** command. Therefore, to apply this feature with security, password-protect the Command level. The operand does not generate events or targets.

If events or targets are required, the UNAUTHORIZED ACCESS operand can be assigned to a digital element programmed with event logs or targets enabled.

The following table outlines access level timeout settings.

SETTINGS ⇨ PRODUCT SETUP ⇨ SECURITY ⇨⇩ ACCESS SUPERVISION ⇨⇩ ACCESS LEVEL TIMEOUTS

■ ACCESS LEVEL ■ TIMEOUTS	⇔	COMMAND LEVEL ACCESS TIMEOUT: 5 min	Range: 5 to 480 minutes in steps of 1
	⇧	SETTING LEVEL ACCESS TIMEOUT: 30 min	Range: 5 to 480 minutes in steps of 1

These settings allow the user to specify the length of inactivity required before returning to the Restricted access level. Note that the access level is set to Restricted when control power is cycled.

COMMAND LEVEL ACCESS TIMEOUT — This setting specifies the length of inactivity (no local or remote access) required to return to Restricted access from the Command password level.

SETTING LEVEL ACCESS TIMEOUT — This setting specifies the length of inactivity (no local or remote access) required to return to Restricted access from the Settings password level.

Dual-permission security access

SETTINGS ⇨ PRODUCT SETUP ⇨ SECURITY ⇨⇩ DUAL PERMISSION SECURITY ACCESS

■ DUAL PERMISSION ■ SECURITY ACCESS	⇔	LOCAL SETTING AUTH: On	Range: selected FlexLogic operands (see below)
	⇩	REMOTE SETTING AUTH: On	Range: FlexLogic operand
	⇧	ACCESS AUTH TIMEOUT: 30 min	Range: 5 to 480 minutes in steps of 1

This menu displays when the **ACCESS LEVEL** setting is other than Restricted or Command.

This feature provides a mechanism to prevent unauthorized or unintended upload of settings to a relay through the local or remote interface.

The following settings are available through the local (front panel) interface only.

- **LOCAL SETTING AUTH** — This setting is used for local (front panel or RS232 interface) setting access supervision. Valid values for the FlexLogic operands are either "On" (default) or any physical "Contact Input ~~ On" value.

  If this setting is "On," then local setting access functions as normal; that is, a local setting password is required. If this setting is any contact input on FlexLogic operand, then the operand must be asserted (on) prior to providing the local setting password to gain setting access.

  If setting access is *not* authorized for local operation (front panel or RS232 interface) and the user attempts to obtain setting access, then the UNAUTHORIZED ACCESS message displays on the front panel.

  If this setting is "Off," firmware upgrades are blocked. If this setting is "On," firmware upgrades are allowed.

- **REMOTE SETTING AUTH** — This setting is used for remote (Ethernet or RS485 interface) setting access supervision.

  If this setting is "On" (the default setting), then remote setting access functions as normal; that is, a remote password is required. If this setting is "Off," then remote setting access is blocked even if the correct remote setting password is provided. If this setting is any other FlexLogic operand, then the operand must be asserted (set as on) prior to providing the remote setting password to gain setting access.

  If this setting is "Off," firmware upgrades are blocked. If this setting is "On," firmware upgrades are allowed.
- **ACCESS AUTH TIMEOUT** — This setting represents the timeout delay for local setting access. This setting is applicable when the **LOCAL SETTING AUTH** setting is programmed to any operand except "On." The state of the FlexLogic operand is monitored continuously for an off-to-on transition. When this occurs, local access is permitted and the timer programmed with the **ACCESS AUTH TIMEOUT** setting value is started. When this timer expires, local setting access is immediately denied. If access is permitted and an off-to-on transition of the FlexLogic operand is detected, the timeout is restarted. The status of this timer updates every five seconds.

The following settings are available through the remote (EnerVista UR Setup) interface only. Select the **Settings > Product Setup > Security** menu item to display the security settings window.

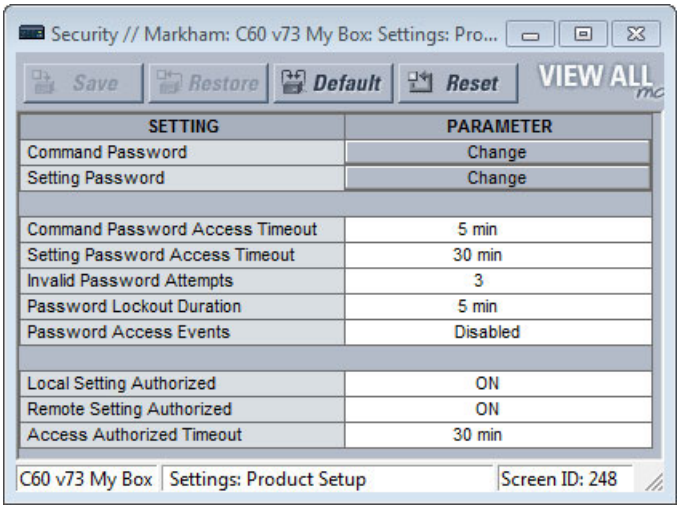

SETTING	PARAMETER
Command Password	Change
Setting Password	Change
Command Password Access Timeout	5 min
Setting Password Access Timeout	30 min
Invalid Password Attempts	3
Password Lockout Duration	5 min
Password Access Events	Disabled
Local Setting Authorized	ON
Remote Setting Authorized	ON
Access Authorized Timeout	30 min

The **Remote Settings Authorized** setting is used for remote (Ethernet or RS485 interface) setting access supervision. If this setting is "On" (the default setting), then remote setting access functions as normal; that is, a remote password is required. If this setting is "Off," then remote setting access is blocked even if the correct remote setting password is provided. If this setting is any other FlexLogic operand, then the operand must be asserted (on) prior to providing the remote setting password to gain setting access.

The **Access Authorized Timeout** setting represents the timeout delay remote setting access. It applies when the **Remote Settings Authorized** setting is programmed to any operand except "On" or "Off." The state of the FlexLogic operand is continuously monitored for an off-to-on transition. When this occurs, remote setting access is permitted, and the timer programmed with the **Access Authorized Timeout** setting value is started. When this timer expires, remote setting access is denied immediately. If access is permitted and an off-to-on transition of the FlexLogic operand is detected, the timeout is restarted. The status of this timer updates every five seconds.

5.3.1.3 EnerVista security

Enable the security management system

Access to files is controlled by the operating system and EnerVista software as follows:

- Access privileges to files are defined by the Windows operating system. A standard user does not have access to a file created by an administrator or another user.
- When the EnerVista UR Setup software security system is disabled (passwords are not required), all users have administrator access

The EnerVista security system allows an administrator to manage access privileges of multiple users of EnerVista. It is disabled by default to allow access to the device immediately after installation. When security is disabled, all users have administrator access. GE recommends enabling the EnerVista security before placing the device in service.

To enable the security system and require password use:

1. Select the **Security > User Management** menu to open the user management window.

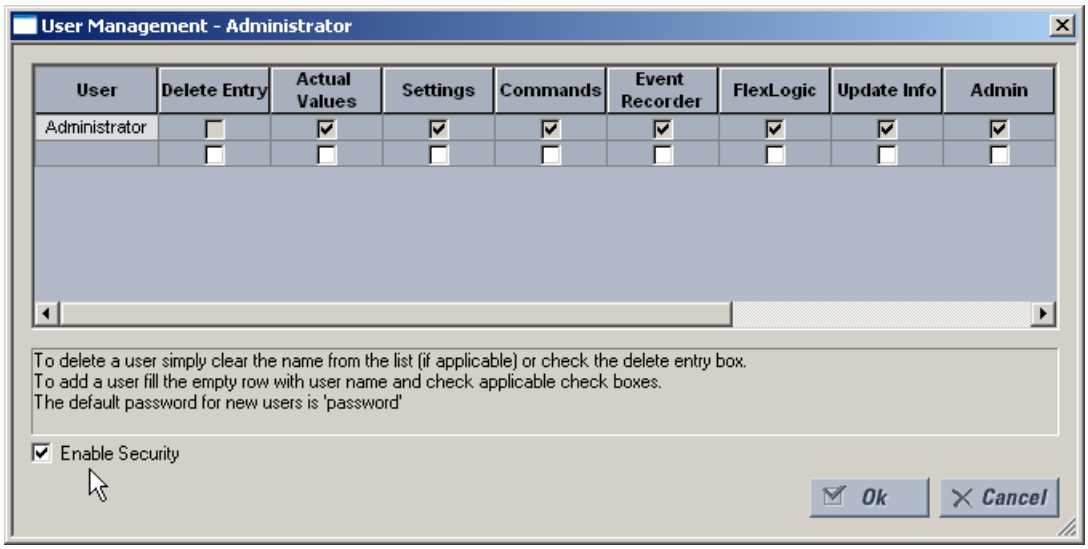

2. Enable the **Enable Security** check box in the lower-left corner to enable the security management system.
3. Click the **Ok** button.

NOTE

If you force password entry using this feature, ensure that you know the Administrator password. If you do not know the password and are locked out of the software, reset the device to factory defaults as outlined later for **COMMANDS ⇨⇩ RELAY MAINTENANCE ⇨ SERVICE COMMAND**. When using CyberSentry, the default password is "ChangeMe1#".

Security is now enabled for the EnerVista UR Setup software. Upon starting the software, users are now required to enter a username and password.

Add a new user

The following pre-requisites are required to add user accounts to the EnerVista security management system:

- The user adding the account must have administrator rights
- The EnerVista security management system must be enabled (previous section)

To add a user account:

1. Select the **Security > User Management** item from the top menu to open the user management window.
2. Enter a username in the **User** field. The username must be four to 20 characters in length.

3. Select the user access rights by enabling the check box of one or more fields.

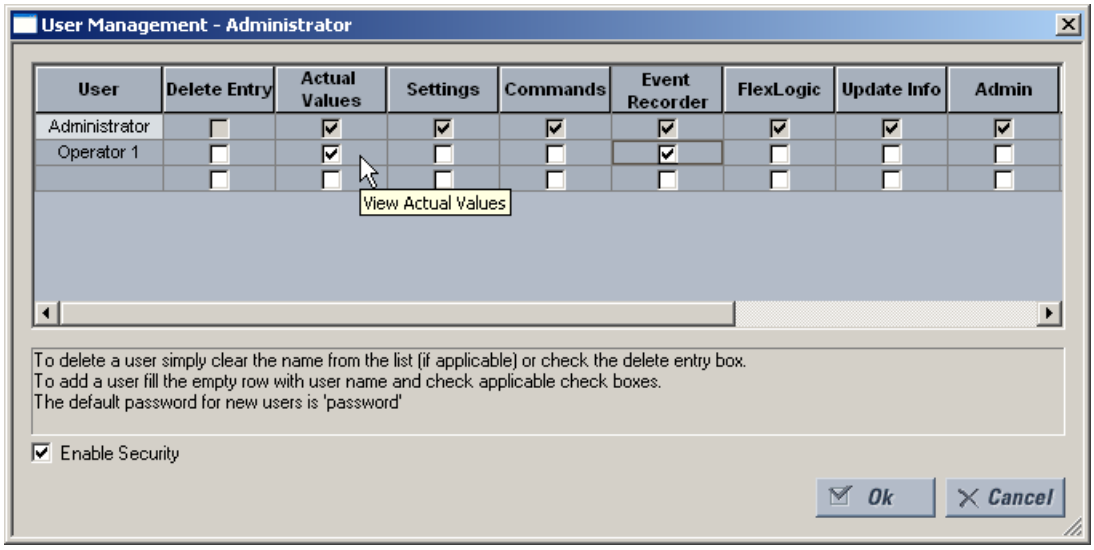

The table outlines access rights.

Table 5-1: Access rights summary

Field	Description
Delete Entry	Deletes the user account when exiting the user management window
Actual Values	Allows the user to read **Actual Values**
Settings	Allows the user to read **Settings** values
Commands	Allows the user to execute **Commands**
Event Recorder	Allows the user to use the **Event Recorder**
FlexLogic	Allows the user to read **FlexLogic** values
Update Info	Allows the user to write to any function to which they have read privileges. When any of the **Settings**, **Event Recorder**, and **FlexLogic** check boxes are enabled by themselves, the user is granted read access. When any of them are enabled in conjunction with the **Update Info** box, they are granted read and write access. The user is not granted write access to functions that are not enabled, even if the **Update Info** field is enabled.
Admin	When the check box is enabled, the user becomes an EnerVista UR Setup administrator and has all administrative rights. Exercise caution when granting administrator rights.

4. Click **OK** to add the user account to the system.

Modify user privileges

The following pre-requisites are required to modify user privileges in the EnerVista security management system:

- The user modifying the privileges must have administrator rights
- The EnerVista security management system must be enabled (the **Enable Security** check box enabled)

To modify user privileges:

1. Select the **Security > User Management** item from the top menu to open the user management window.
2. Locate the username in the **User** field.

3. Modify the user access rights by enabling or disabling one or more of the check boxes.

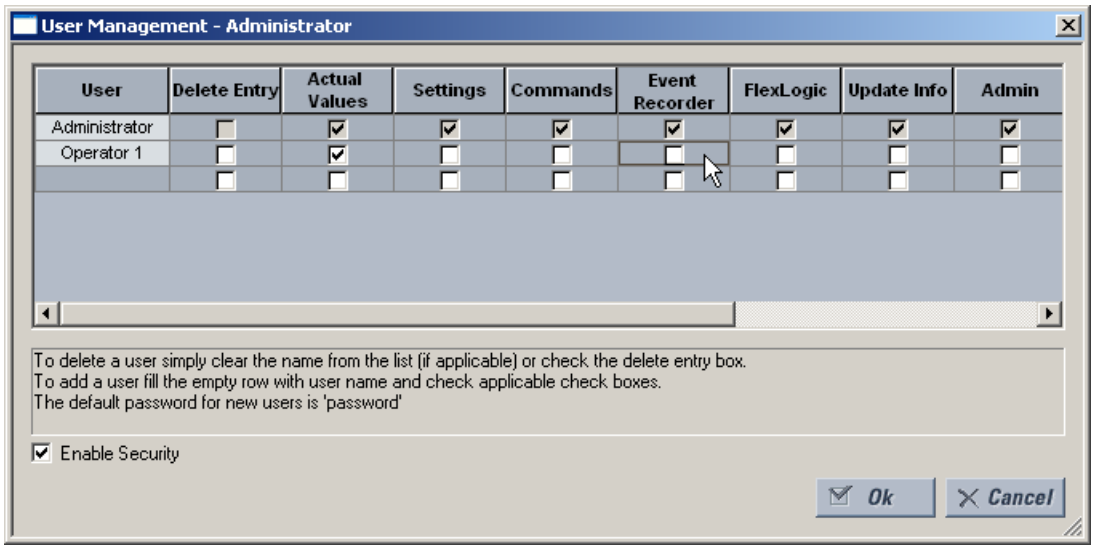

The table outlines access rights.

Table 5-2: Access rights summary

Field	Description
Delete Entry	Deletes the user account when exiting the user management window
Actual Values	Allows the user to read actual values
Settings	Allows the user to read setting values
Commands	Allows the user to execute commands
Event Recorder	Allows the user to use the digital fault recorder
FlexLogic	Allows the user to read FlexLogic values
Update Info	Allows the user to write to any function to which they have read privileges. When any of the **Settings**, **Event Recorder**, and **FlexLogic** check boxes are enabled by themselves, the user is granted read access. When any of them are enabled in conjunction with the **Update Info** box, they are granted read and write access. The user is not granted write access to functions that are not enabled, even if the **Update Info** field is enabled.
Admin	When this check box is enabled, the user becomes an EnerVista UR Setup administrator and has all administrative rights. Exercise caution when granting administrator rights.

4. Click **OK** to save the changes.

5.3.1.4 CyberSentry security

SOFTWARE OPTION

This feature requires a CyberSentry software option. See the Order Codes section in chapter 2 for details.

The EnerVista software provides the means to configure and authenticate the B30 access using either a server or the device. Access to functions depends on user role.

The login screen of EnerVista has two options for access to the B30, these being Server and Device authentication.

Figure 5-2: Login screen for CyberSentry

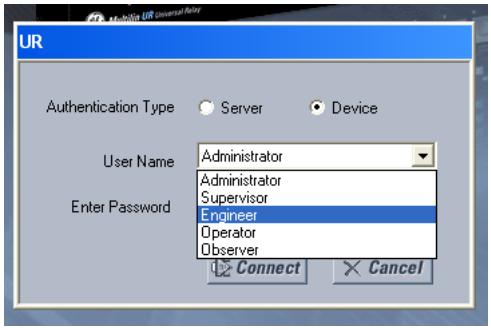

When the "Server" **Authentication Type** is selected, the B30 uses the RADIUS server and not its local authentication database to authenticate the user.

When the "Device" button is selected, the B30 uses its local authentication database and not the RADIUS server to authenticate the user. In this case, it uses built-in roles (Administrator, Engineer, Supervisor, Operator, Observer, or Administrator and Supervisor when Device Authentication is disabled), as login accounts and the associated passwords are stored on the B30 device. In this case, access is not user-attributable. In cases where user-attributable access is required, especially for auditable processes for compliance reasons, use server authentication (RADIUS) only.

No password or security information is displayed in plain text by the EnerVista software or the UR device, nor are they ever transmitted without cryptographic protection.

5

NOTE

Only (TCP/UDP) ports and services that are needed for device configuration and for customer enabled features are open. All the other ports are closed. For example, Modbus is on by default, so its TCP port 502, is open. But if Modbus is disabled, port 502 is closed. This function has been tested and no unused ports have been found open.

When CyberSentry is enabled, Modbus communications over Ethernet is encrypted, which is not always tolerated by SCADA systems. The UR has a bypass access feature for such situations, which allows unencrypted Modbus over Ethernet. The **Bypass Access** setting is available on the **SETTINGS ⇨ PRODUCT SETUP ⇨ SECURITY ⇨⇩ SUPERVISORY** screen. Note that other protocols (DNP, 101, 103, 104, EGD) are not encrypted, and they are good communications options for SCADA systems when CyberSentry is enabled.

When using the rear RS485 port and CyberSentry, registers can be read with a maximum buffer of 64 bytes. Settings may not be written, so use another port or configure the **SERIAL INACTIVITY TIMEOUT** setting to a high value, such as eight minutes, to give the relay enough time to finish the task.

CyberSentry settings through EnerVista

CyberSentry security settings are configured under **Device > Settings > Product Setup > Security**.

Figure 5-3: Security panel when CyberSentry installed

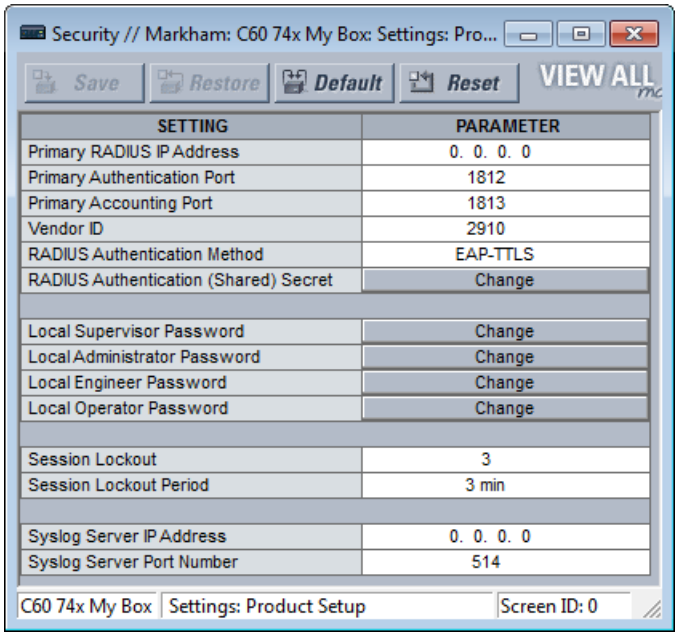

For the **Device > Settings > Product Setup > Supervisory** option, the panel looks like the following.

Figure 5-4: Supervisory panel

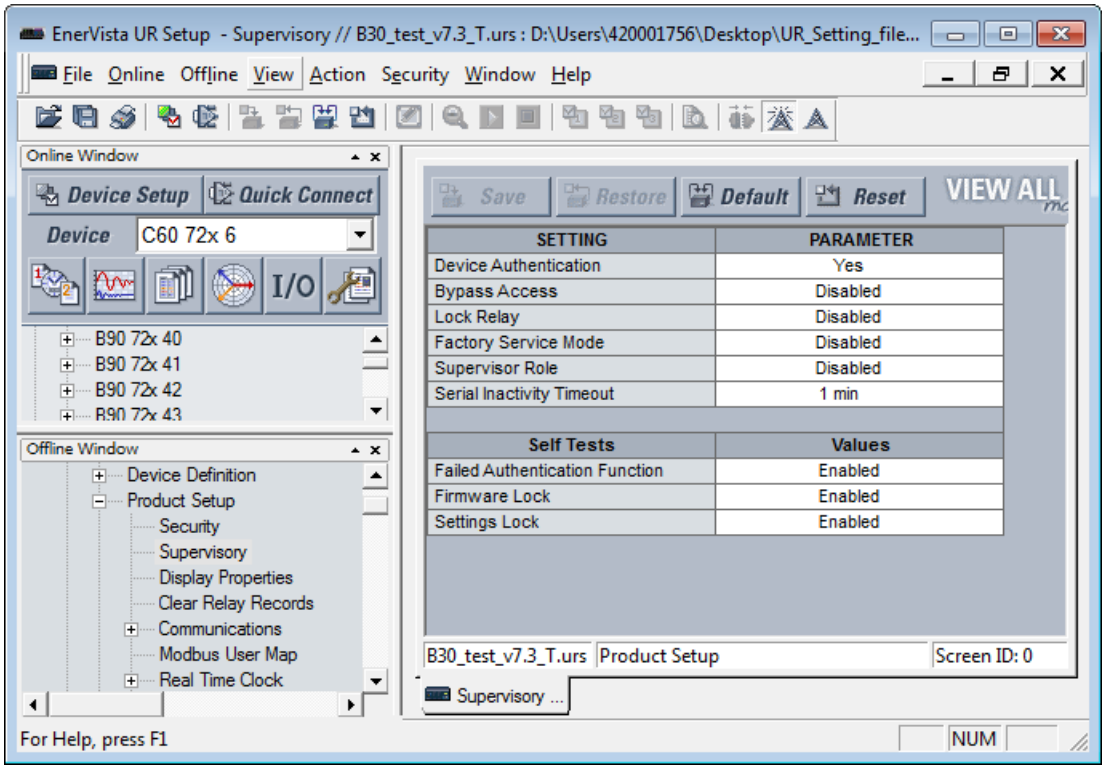

For the Security panel, the following settings are available.

Table 5-3: RADIUS server settings

Setting name	Description	Minimum	Maximum	Default	Units	Minimum permission
Primary RADIUS IP Address	IP address of the main RADIUS server. Default value indicates no Primary RADIUS server is configured, and hence RADIUS is disabled. Restart the relay for any change to take effect.	0.0.0.0	223.255.255.254	0.0.0.0	-	Administrator
Primary Authentication Port	RADIUS authentication port	1	65535	1812	-	Administrator
Primary Accounting Port	RADIUS accounting port	1	65535	1813	-	Administrator
Vendor ID	An identifier that specifies RADIUS vendor-specific attributes used with the protocol			Value that represents General Electric		Administrator
RADIUS Authentication Method	Authentication method used by RADIUS server. Currently fixed to EAP-TTLS.	EAP-TTLS	EAP-TTLS	EAP-TTLS	-	Administrator
RADIUS Authentication (Shared) Secret	Shared secret used in authentication. It displays as asterisks. This setting must meet the CyberSentry password requirements.	See the Password Requirements section earlier in this chapter	See the following password section for requirements	N/A	-	Administrator
Confirm RADIUS Authentication (Shared) Secret	Confirmation of the shared secret. The entry displays as asterisks.	See the Password Requirements section	245 characters	N/A	-	Administrator

5

Table 5-4: General security settings

Setting name	Description	Minimum	Maximum	Default	Units	Minimum permission
Session Lockout	Number of failed authentications before the device blocks subsequent authentication attempts for the lockout period	0 (lockout disabled)	99	3	-	Administrator
Session Lockout Period	The period in minutes that a user is prevented from logging in after being locked out	0 (no period)	9999	3	min	Administrator
Syslog Server IP Address	The IP address of the target Syslog server to which all security events are transmitted	0.0.0.0	223.255.255.254	0.0.0.0	-	Administrator
Syslog Server Port Number	The UDP port number of the target syslog server to which all security events are transmitted	1	65535	514	-	Administrator
Device Authentication	When enabled, local Device authentication with roles is allowed. When disabled, the UR only authenticates to the AAA server (RADIUS). **NOTE:** Administrator and Supervisor (if still enabled) remain active even after Device authentication is disabled. The only permission for local Administrator is to re-enable Device authentication when Device authentication is disabled. To re-enable Device authentication, the Supervisor unlocks the device for setting changes, and then the Administrator can re-enable Device authentication.	Disabled	Enabled	Enabled	-	Administrator

Setting name	Description	Minimum	Maximum	Default	Units	Minimum permission
Firmware Lock (via Lock Relay)	Indicates if the device receives firmware upgrades. If Enabled and the firmware upgrade attempt is made, the device denies the upgrade and displays an error message that the lock is set. On each firmware upgrade, this setting goes back to the default. The Lock Relay setting blocks settings and firmware updates.	Disabled	Enabled	Enabled	-	Administrator
Factory Service Mode	When enabled, the device can go into factory service mode. To enable, Supervisor authentication is necessary.	Disabled	Enabled	Disabled	-	Supervisor (Administrator when Supervisor is disabled)
Restore to Defaults	Sets the device to factory defaults	No	Yes	No	-	Administrator
Supervisor Role	When enabled, the Supervisor role is active. To enable, Administrator authentication is necessary. When disabled, the Supervisor role is inactive. To disable, Supervisor authentication is necessary.	Disabled	Enabled	Enabled	-	Administrator to enable and Supervisor to disable
RADIUS user names	Ensures that RADIUS user names are not the same as local/device role names	See RADIUS server documents	See RADIUS server document s		-	Administrator
Password	Local/device roles except for Observer are password-protected. All RADIUS users are password-protected.	See the Password Requirements section earlier in this chapter	See the following password section for requireme nts	Change Me1#	Text	The specified role and Administrator, except for Supervisor, where it is only itself

5

Table 5-5: Security alarm settings

Setting name	Description / Details	Min	Max	Default	Units	Minimum permissions
Failed Authentications	A threshold number indicating when an alarm is set off to indicate too many failed authentication attempts	Disabled	Enabled	Enabled	-	Administrator
Firmware Lock	A value indicating if the device can receive a firmware upgrade. If Enabled and a firmware upgrade attempt is made, the device alarm activates. If Disabled, the device alarm does not activate. On each firmware upgrade this setting goes back to the default.	Disabled	Enabled	Enabled	-	Administrator
Settings Lock	A value indicating if the device can accept any settings changes. If Enabled and a settings change attempt is made, the device alarm activates. If Disabled, the device alarm does not activate.	Disabled	Enabled	Enabled	-	Supervisor (Administrator if Supervisor has been disabled)

CyberSentry settings through the front panel

SETTINGS ⇨ PRODUCT SETUP ⇨ SECURITY

■ SECURITY ■	⇔	LOGIN: None	Range: Administrator, Engineer, Supervisor, Operator, Factory (for factory use only), None
	⇕	■ CHANGE DEVICE ■ PASSWORD	See page 5-20
	⇕	LOGOUT: No	Range: FlexLogic operand

⇕	**DEVICE AUTHENTICATION: Yes**	Range: Yes, No
⇕	**FACTORY SERVICE MODE: Disabled**	Range: Enabled, Disabled
⇕	■ **SESSION** ■ **SETTINGS**	See page 5-21
⇕	■ **RESTORE DEFAULTS** ■	See page 5-21
⇕	■ **SUPERVISORY** ■	See page 5-21
⇕	**SYSLOG IP ADDRESS: 0.0.0.0**	Range: 0.0.0.0, 255.255.255.255
⇧	**SYSLOG PORT NUMBER: 514**	Range: 1 to 65535

LOGIN — This setting is applicable for Device authentication only. This setting allows a user to log in with a specific role, as outlined here. For the Supervisor role, enable the "Supervisor Role" setting. Log out by right-clicking the device in EnerVista and selecting the **Disconnect** option.

Whenever a new role is logged in, the user is prompted to enter a password. Passwords must obey the requirements specified earlier in the chapter in the Password Requirements section.The UR device supports five roles. Roles have their corresponding passwords, except the Observer role, which does not require a password. There are no time-outs for the Administrator, Engineer, Operator, and Supervisor when logged in using the front panel; log out manually or use the **Command > Security** commands in the software.

5

The roles are defined as follows:

- Administrator — Complete read/write access to all settings and commands. This role does not allow concurrent access. This role has an operand to indicate when it is logged on.
- Engineer — Complete read/write access to all settings and commands except configuring Security settings and firmware upgrades. This role does not allow concurrent access.
- Operator — The Operator has read/write access to all settings under the Commands menu/section. This role does not exist offline.
- Supervisor — This is only an approving role. This role's authentication commits setting changes submitted by Administrator or Engineer. The Supervisor role authenticates to unlock the UR relay for setting changes and not approve changes after the fact. Only a Supervisor can set the Settings Lock and Firmware Lock in the Security settings. This role also has the ability to forcefully log off any other role and clear the security event log. This role can also be disabled, but only through a Supervisor authentication. When this role is disabled its permissions are assigned to the Administrator role.
- Observer — This role has read-only access to all B30 settings. This role allows concurrent access but it has no download access to any files on the device. Observer is the default role if no authentication has been done to the device. This role displays as "None" on the front panel. When local authentication is used, no password is required for this role. When RADIUS server authentication is used, a password is required.

NOTE

The Factory service role is not available. It is for factory use only.

The Local Access Denied message on the front panel can mean that you need to log in to the UR in order to complete the action.

Change device password

SETTINGS ⇨ PRODUCT SETUP ⇨ SECURITY ⇨⇩ CHANGE DEVICE PASSWORD

■ **CHANGE DEVICE** ■ **PASSWORD**	⇔	**NEW PASSWORD:**	Range: 20 alphanumeric characters
	⇧	**CONFIRM PASSWORD:**	Range: 20 alphanumeric characters

The menu is shown on the front panel upon successful login of the Administrator role.

Passwords are stored in text format. No encryption is applied.

NOTE

In Device authentication mode, the Observer role does not have a password associated with it. In Server authentication mode the Observer role requires a password.

If you are locked out of the software, reset the device to factory defaults as outlined later for **COMMANDS ⇨⇩ RELAY MAINTENANCE ⇨ SERVICE COMMAND**. When using CyberSentry, the default password is "ChangeMe1#".

Once the passwords are set, the Administrator with Supervisor approval can change the role-associated password.

In CyberSentry, password encryption is not supported.

Session settings

SETTINGS ⇨ PRODUCT SETUP ⇨ SECURITY ⇨⇩ SESSION SETTINGS

■ SESSION ■ SETTINGS	⇔	SESSION LOCKOUT: 3	Range: 0 to 99
	⇧	SESSION LOCKOUT PERIOD: 3 min	Range: 0 to 9999 minutes

SESSION LOCKOUT — This setting specifies the number of failed authentications before the device blocks subsequent authentication attempts for the lockout period. A value of zero means lockout is disabled.

SESSION LOCKOUT PERIOD — This setting specifies the period of time in minutes of a lockout period. A value of 0 means that there is no lockout period.

Restore defaults

SETTINGS ⇨ PRODUCT SETUP ⇨ SECURITY ⇨⇩ RESTORE DEFAULTS

■ RESTORE DEFAULTS ■	⇔	LOAD FACTORY DEFAULTS: No	Range: Yes, No

LOAD FACTORY DEFAULTS — This setting is used to reset all the settings, communication, and security passwords. An Administrator role is used to change this setting and a Supervisor role (if not disabled) approves it.

Supervisory

SETTINGS ⇨ PRODUCT SETUP ⇨ SECURITY ⇨⇩ SUPERVISORY

■ SUPERVISORY ■	⇔	DEVICE AUTHENTICATION: Yes	Range: Yes, No
	⇩	BYPASS ACCESS: Disabled	Range: Local, Remote, Local and Remote, Disabled, Pushbuttons
	⇩	LOCK RELAY: Disabled	Range: Enabled, Disabled
	⇩	FACTORY SERVICE MODE: Disabled	Range: Enabled, Disabled
	⇩	■ SELF TESTS ■	See below
	⇩	SUPERVISOR ROLE: Disabled	Range: Enabled, Disabled
	⇧	SERIAL INACTIVITY TIMEOUT: 1 min	Range: 1 to 9999 minutes

The Supervisory menu settings are available for Supervisor role only, or if the Supervisor role is disabled then for the Administrator role only.

DEVICE AUTHENTICATION — This setting is enabled by default, meaning "Yes" is selected. When enabled, Device authentication with roles is enabled. When this setting is disabled, the UR only authenticates to the AAA server (RADIUS). However, the Administrator and Supervisor (when enabled) remain active even after device authentication is disabled and their only permission is to re-enable Device authentication. To re-enable Device authentication, the Supervisor unlocks the device for settings changes, then the Administrator re-enables device authentication.

BYPASS ACCESS — The bypass security feature provides an easier access, with no authentication and encryption for those special situations when this is considered safe. Only the Supervisor, or the Administrator when the Supervisor role is disabled, can enable this feature.

Mode	Front panel or serial (RS232, RS485)	Ethernet
Normal mode	Authentication — Role Based Access Control (RBAC) and passwords in clear	Authentication — RBAC and passwords encrypted SSH tunneling
Bypass access mode	No passwords for allowed RBAC levels	No passwords for allowed RBAC levels No SSH tunneling

The bypass options are as follows:

- Local — Bypasses authentication for push buttons, keypad, and RS232
- Remote — Bypasses authentication for RS485 and Ethernet
- Local and Remote — Bypasses authentication for push buttons, keypad, RS232, RS485, and Ethernet
- Pushbuttons — Bypasses authentication for front panel push buttons, including in the software

LOCK RELAY — This setting uses a Boolean value (Enabled/Disabled) to indicate if the device accepts settings changes and whether the device can receive a firmware upgrade. This setting can be changed by the Supervisor role, if it is enabled, or by the Administrator if the Supervisor role is disabled. The Supervisor role disables this setting for the relay to start accepting settings changes, command changes, or firmware upgrade. After all the setting changes are applied or commands executed, the Supervisor enables to lock settings changes.

Example: If this setting is enabled and an attempt is made to change settings or upgrade the firmware, the UR device denies the settings changes or denies upgrading the firmware. If this setting is disabled, the UR device accepts settings changes and firmware upgrade.

This role is disabled by default.

FACTORY SERVICE MODE — When Enabled, the device can go into factory service mode. For this setting to become enabled a Supervisor authentication is necessary. The default value is Disabled.

SUPERVISOR ROLE — When Enabled, the Supervisor role is active. To Disable this setting a Supervisor authentication is necessary. If disabled, the Supervisor role is not allowed to log in. In this case, the Administrator can change the settings under the Supervisory menu.

If enabled, Supervisor authentication is required to change the settings in the Supervisory menu. If the Supervisor disables their role after authentication, the Supervisor session remains valid until they switch to another role using MMI or until they end the current Supervisor session if using communications.

This role is disabled by default.

SERIAL INACTIVITY TIMEOUT — The role logged via a serial port is auto logged off after the Serial Inactivity timer times out. A separate timer is maintained for RS232 and RS485 connections. Set this value to a high number, such as eight minutes, when using the rear RS485 terminals for settings write.

Self-tests

SETTINGS ⇨ PRODUCT SETUP ⇨ SECURITY ⇨⇩ SUPERVISORY ⇨ SELF TESTS

■ SELF TESTS ■	⇔	■ FAILED ■ AUTHENTICATE	See below
	⇩	FIRMWARE LOCK: Enabled	Range: Enabled, Disabled
	⇧	SETTINGS LOCK: Enabled	Range: Enabled, Disabled

FAILED AUTHENTICATE — If this setting is Enabled then the number of failed authentications is compared with the Session Lockout threshold. When the Session Lockout threshold is exceeded, this minor alarm indication comes up.

FIRMWARE LOCK — If this setting is Enabled, then any firmware upgrade operation attempt when the Lock Relay setting is enabled brings up this self test alarm.

SETTINGS LOCK — If this setting is Enabled then an unauthorized write attempt to a setting for a given role activates this self test.

SETTINGS ⇨ PRODUCT SETUP ⇨ SECURITY ⇨⇩ SUPERVISORY ⇨ SELF TESTS ⇨ FAILED AUTHENTICATE

■ **FAILED** ■ **AUTHENTICATE**	⇔	**FAILED AUTHENTICATE:** **Enabled**	Range: Enabled, Disabled

CyberSentry setup

When first using CyberSentry security, use the following procedure for setup.

1. Log in to the relay as Administrator by using the **VALUE** keys on the front panel to enter the default password "ChangeMe1#". Note that the Lock Relay setting needs to be disabled in the **Security > Supervisory** menu. When this setting is disabled, configuration and firmware upgrade are possible. By default, this setting is disabled.
2. Enable the Supervisor role if you have a need for it.
3. Make any required changes in configuration, such as setting a valid IP address for communication over Ethernet.
4. Log out of the Administrator account by choosing None.
5. Next, Device or Server authentication can be chosen on the login screen, but the choice is available only in EnerVista. Use Device authentication to log in using the five pre-configured roles (Administrator, Supervisor, Engineer, Operator, Observer). When using a serial connection, only Device authentication is supported. When Server authentication is required, characteristics for communication with a RADIUS server must be configured. This is possible only in the EnerVista software. The RADIUS server itself also must be configured. The appendix called RADIUS Server at the end of this instruction manual gives an example of how to set up a simple RADIUS server. Once both the RADIUS server and the parameters for connecting the UR to the server have been configured, you can choose Server authentication on the login screen of EnerVista.

NOTICE

The use of CyberSentry for devices communicating through an Ethernet-to-RS485 gateway is not supported. Because these gateways do not support the secure protocols necessary to communicate with such devices, the connection cannot be established. Use the device as a non-CyberSentry device.

Users logged in through the front panel are not timed out and cannot be forcefully logged out by a supervisor. Roles logged in through the front panel that do no allow multiple instances (Administrator, Supervisor, Engineer, Operator) must switch to None (equivalent to a logout) when they are done in order to log out.

For all user roles except Observer, only one instance can be logged in at a time, for both login by front panel and software.

To configure Server authentication:

1. In the EnerVista software, choose Device authentication and log in as Administrator.
2. Configure the following RADIUS server parameters: IP address, authentication port, shared secret, and vendor ID.
3. On the RADIUS server, configure the user accounts. Do not use the five pre-defined roles as user names (Administrator, Supervisor, Engineer, Operator, Observer) in the RADIUS server. If you do, the UR relay automatically provides the authentication from the device.
4. In the EnerVista software, choose Server authentication and log in using the user name and password configured on the RADIUS server for Server authentication login.
5. After making any required changes, log out.

NOTICE

When changing settings offline, ensure that only settings permitted by the role that performs the settings download are changed because only those changes are applied.

Pushbuttons (both user-control buttons and user-programmable buttons) located on the front panel can be pressed by an Administrator or Engineer role. This also applies to the **RESET** button, which resets targets, where targets are errors displayed on the front panel or the Targets panel of the EnerVista software. The **RESET** button has special behavior in that it allows these two roles to press it even when they are logged in through the RS232 port and not through the front panel.

To reset the security event log and self-test operands:

1. Log in as Supervisor (if the role is enabled) or Administrator (if the Supervisor role is disabled) and execute a clear security command under **Commands > Security > Clear Security**.

Security events

The security events produced when the CyberSentry option is purchased are sent as sytem log (syslog) messages to a syslog server, if one is configured. The format is as follows.

	Security log	Event Number	Date & Timestamp	Username	IP address	Role	Activity Value

Event Number — Event identification number (index)

Date & Timestamp — UTC date and time

Username — 255 chars maximum, but in the security log it is truncated to 20 characters

IP address — Device IP address

Role — 16 bit unsigned, of type format F617

Enumeration	Role
0	None
1	Administrator
2	Supervisor
3	Engineer
4	Operator
5	Factory

Activity Value — 16 bit unsigned

Enumeration	Description
1	Authentication Failed
2	User Lockout
3	FW Upgrade
4	FW Lock
5	Settings Lock
6	Settings Change. Because this can fill the entire event log, it is supported by the already existing Settings_Change.log file. This event is not required.
7	Clear Oscillography command
8	Clear Data Logger command (not applicable to all UR products)
9	Clear Demand Records command (not applicable to all UR products)
10	Clear Energy command (not applicable to all UR products)
11	Clear Unauthorized Access command
12	Clear Teleprotection Counters command (not applicable to all UR products)
13	Clear All Relay Records command
14	Role Log in
15	Role Log off

In addition to supporting syslog, a B30 with CyberSentry also saves the security events in two local security files, these being SECURITY_EVENTS.CSV and SETTING_CHANGES.LOG. Details on these files and how to retrieve them are available in the EnerVista software under **Maintenance > Retrieve File**. Depending on the level of criticality/severity, a syslog server or a reporting tool gathering information from a syslog server can produce reports, charts, and so on. All severity levels are per RFC 5424.

Table 5-6: CyberSentry system events recorded

Event	Severity	Description
FAILED_AUTH, ORIGIN, TIMESTAMP	Warning (4)	A failed authentication with origin information (username and IP:MAC address), a time stamp in UTC time when it occurred
AUTH_LOCKOUT, ORIGIN, TIMESTAMP	Error (3)	An authentication lockout has occurred because of too many failed authentication attempts
FIRMWARE_UPGD, ORIGIN, TIMESTAMP	Warning (4)	Indicates that a change of firmware has occurred
FIRMWARE_LOCK, ORIGIN, TIMESTAMP	Critical (1)	An attempt was made to change firmware while the firmware lock was enabled
SETTING_CHG, ORIGIN, TIMESTAMP	Notice (5)	Indicates setting change(s)
SETTING_LOCK, ORIGIN, TIMESTAMP	Critical (1)	An attempt was made to change settings while the settings lock was enabled
LOGIN, ORIGIN, TIMESTAMP	Warning (4)	Indicates when a certain role logged in
LOGOUT, ORIGIN, TIMESTAMP	Notice (5)	Indicates when a certain role logged out or timed out
CLEAR_OSCILLOGRAPHY	Notice (5)	Clear oscillography command was issued
CLEAR_DATA_LOGGER	Notice (5)	Clear data logger command was issued
CLEAR_DEMAND_RECS	Notice (5)	Clear demand records command was issued
CLEAR_ENERGY	Notice (5)	Clear energy command was issued
RESET_UNAUTH_ACCESS	Warning (4)	Reset Unauthorized access command was issued
CLEAR_TELEPROTECTION_CNT	Notice (5)	Clear teleprotection counters command was issued
CLEAR_ALL_RECS	Warning (4)	Clear all records command was issued

5.3.2 Display properties

SETTINGS ⇨ PRODUCT SETUP ⇨⇩ DISPLAY PROPERTIES

■ DISPLAY ■ PROPERTIES	⇔	**LANGUAGE: English**	Range: English; English, French; English, Russian; English, Chinese; English, German (examples; depends on order code) Visible when language other than English purchased
	⇩	**FLASH MESSAGE TIME: 1.0 s**	Range: 0.5 to 10.0 s in steps of 0.1
	⇩	**DEFAULT MESSAGE TIMEOUT: 300 s**	Range: 10 to 900 s in steps of 1
	⇩	**DEFAULT MESSAGE INTENSITY: 25 %**	Range: 25%, 50%, 75%, 100% Visible when a VFD is installed
	⇩	**SCREEN SAVER FEATURE: Disabled**	Range: Disabled, Enabled Visible when an LCD is installed
	⇩	**SCREEN SAVER WAIT TIME: 30 min**	Range: 1 to 65535 min. in steps of 1 Visible when an LCD is installed
	⇩	**CURRENT CUT-OFF LEVEL: 0.020 pu**	Range: 0.002 to 0.020 pu in steps of 0.001
	⇧	**VOLTAGE CUT-OFF LEVEL: 1.0 V**	Range: 0.1 to 1.0 V secondary in steps of 0.1

Some relay messaging characteristics can be modified to suit different situations using the display properties settings.

LANGUAGE — This setting selects the language used to display settings, actual values, and targets. This setting displays when a language other than English was purchased, and the range depends on the order code of the relay.

NOTE

Restart the relay after changing the **LANGUAGE** setting.

The language can be selected also for the front panel in EnerVista under **Maintenance > Change Front Panel**.

The language of the EnerVista software can be changed under **View > Language**.

FLASH MESSAGE TIME — Flash messages are status, warning, error, and information messages displayed in response to certain key presses during settings programming. These messages override any normal messages. Use this setting to change the duration of flash messages on the display.

DEFAULT MESSAGE TIMEOUT — If the keypad is inactive for a period of time, the relay automatically reverts to a default message. The inactivity time is modified using this setting to ensure that messages remain on the screen long enough during programming or reading of actual values.

DEFAULT MESSAGE INTENSITY — To extend phosphor life in the vacuum fluorescent display, the brightness can be attenuated during default message display. During keypad interrogation, the display always operates at full brightness.

SCREEN SAVER FEATURE and **SCREEN SAVER WAIT TIME** — These settings are only visible if the B30 has a liquid crystal display (LCD) and control its backlighting. When the **SCREEN SAVER FEATURE** is "Enabled," the LCD backlighting turns off after the **DEFAULT MESSAGE TIMEOUT** followed by the **SCREEN SAVER WAIT TIME**, provided that no keys have been pressed and no target messages are active. When a keypress occurs or a target becomes active, the LCD backlighting turns on.

CURRENT CUT-OFF LEVEL — This setting modifies the current cut-off threshold. Very low currents (1 to 2% of the rated value) are very susceptible to noise. Some customers prefer very low currents to display as zero, while others prefer the current to display even when the value reflects noise rather than the actual signal. The B30 applies a cut-off value to the magnitudes and angles of the measured currents. If the magnitude is below the cut-off level, it is substituted with zero. This applies to phase and ground current phasors as well as true RMS values and symmetrical components. The cut-off operation applies to quantities used for metering, protection, and control, as well as those used by communications protocols. Note that the cut-off level for the sensitive ground input is 10 times lower that the **CURRENT CUT-OFF LEVEL** setting value. Raw current samples available via oscillography are not subject to cut-off.

VOLTAGE CUT-OFF LEVEL — This setting modifies the voltage cut-off threshold. Very low secondary voltage measurements (at the fractional volt level) can be affected by noise. Some customers prefer these low voltages to be displayed as zero, while others prefer the voltage to be displayed even when the value reflects noise rather than the actual signal. The B30 applies a cut-off value to the magnitudes and angles of the measured voltages. If the magnitude is below the cut-off level, it is substituted with zero. This operation applies to phase and auxiliary voltages, and symmetrical components. The cut-off operation applies to quantities used for metering, protection, and control, as well as those used by communications protocols. Raw samples of the voltages available via oscillography are not subject to cut-off.

NOTE

Lower the **VOLTAGE CUT-OFF LEVEL** and **CURRENT CUT-OFF LEVEL** with care as the relay accepts lower signals as valid measurements. Unless dictated otherwise by a specific application, the default settings of "0.02 pu" for **CURRENT CUT-OFF LEVEL** and "1.0 V" for **VOLTAGE CUT-OFF LEVEL** are recommended.

5.3.3 Clear relay records

SETTINGS ⇨ PRODUCT SETUP ⇨⇩ CLEAR RELAY RECORDS

■ CLEAR RELAY ■ RECORDS	⇔	CLEAR USER REPORTS: Off	Range: FlexLogic operand
	⇩	CLEAR EVENT RECORDS: Off	Range: FlexLogic operand
	⇩	CLEAR OSCILLOGRAPHY: Off	Range: FlexLogic operand
	⇩	CLEAR DATA LOGGER: Off	Range: FlexLogic operand
	⇩	CLEAR ARC AMPS 1: Off	Range: FlexLogic operand

⇕	**CLEAR ARC AMPS 2:** **Off**	Range: FlexLogic operand
⇕	**CLEAR DEMAND:** **Off**	Range: FlexLogic operand
⇕	**CLEAR ENERGY:** **Off**	Range: FlexLogic operand
⇕	**RESET UNAUTH ACCESS:** **Off**	Range: FlexLogic operand
⇧	**CLEAR DIR I/O STATS:** **Off**	Range: FlexLogic operand Visible only for units with Direct I/O module

RESET UNAUTH ACCESS — Resets the access restriction counter.

Selected records can be cleared from user-programmable conditions with FlexLogic operands. Assigning user-programmable pushbuttons to clear specific records is a typical application for these commands. Since the B30 responds to rising edges of the configured FlexLogic operands, they must be asserted for at least 50 ms to take effect.

Clearing records with user-programmable operands is not protected by the command password. However, user-programmable pushbuttons are protected by the command password. Thus, if they are used to clear records, the user-programmable pushbuttons can provide extra security if required.

For example, to assign user-programmable pushbutton 1 to clear demand records, apply the following settings.

1. Assign the clear demand function to pushbutton 1 by making the following change in the **SETTINGS ⇨ PRODUCT SETUP ⇨⇩ CLEAR RELAY RECORDS** menu:

   CLEAR DEMAND: "PUSHBUTTON 1 ON"

2. Set the properties for user-programmable pushbutton 1 by making the following changes in the **SETTINGS ⇨ PRODUCT SETUP ⇨⇩ USER-PROGRAMMABLE PUSHBUTTONS ⇨ USER PUSHBUTTON 1** menu:

   PUSHBUTTON 1 FUNCTION: "Self-reset"
   PUSHBTN 1 DROP-OUT TIME: "0.20 s"

5.3.4 Communications

5.3.4.1 Menu

SETTINGS ⇨ PRODUCT SETUP ⇨⇩ COMMUNICATIONS

■ **COMMUNICATIONS** ■	⇔	■ **SERIAL PORTS** ■	See below
	⇕	■ **NETWORK** ■	See page 5-28
	⇕	■ **IPv4 ROUTE TABLE** ■	See page 5-34
	⇕	■ **MODBUS PROTOCOL** ■	See page 5-37
	⇕	■ **PROTOCOL** ■	See page 5-37
	⇕	■ **DNP PROTOCOL** ■	See page 5-38
	⇕	■ **DNP / IEC104** ■ **POINT LISTS**	See page 5-41
	⇕	■ **IEC 61850 PROTOCOL** ■	Access in EnerVista See page 5-42

⇕	■ WEB SERVER ■ HTTP PROTOCOL	See page 5-86
⇕	■ TFTP PROTOCOL ■	See page 5-87
⇕	■ IEC 60870-5-104 ■ PROTOCOL	See page 5-87
⇕	■ EGD PROTOCOL ■	See page 5-89
⇧	■ IEC103 ■ PROTOCOL	See page 5-90

5.3.4.2 Serial ports

SETTINGS ⇨ PRODUCT SETUP ⇨⇩ COMMUNICATIONS ⇨ SERIAL PORTS

■ SERIAL PORTS ■	⇔	RS232 BAUD RATE: 115200	Range: 19200, 115200
	⇕	RS485 COM2 BAUD RATE: 19200	Range: 300, 1200, 2400, 4800, 9600, 14400, 19200, 28800, 33600, 38400, 57600, 115200 bit/s
	⇕	RS485 COM2 PARITY: Even	Range: None, Odd, Even
	⇧	RS485 COM2 RESPONSE MIN TIME: 0 ms	Range: 0 to 1000 ms in steps of 10

5

RS232 BAUD RATE, **RS485 COM2 BAUD RATE**, and **PARITY** — The B30 is equipped with two independent serial communication ports. The faceplate RS232 port is intended for local use and has two options for baud rate. The rear COM2 port is RS485 and has settings for baud rate and parity. It is important that these parameters agree with the settings used on the computer or other equipment that is connected to these ports. Any of these ports can be connected to a computer running the EnerVista software. This software can download and upload setting files, view measured parameters, and upgrade the relay firmware. A maximum of 32 relays can be daisy-chained and connected to a DCS, PLC, or computer using the RS485 ports. If IEC 60870-103 is chosen as the protocol, valid baud rates are 9600 and 19200 bit/s, and valid parity is Even.

RS485 COM2 RESPONSE MIN TIME — This setting specifies the minimum time before the rear RS485 port transmits after receiving data from a host. This feature allows operation with hosts that hold the RS485 transmitter active for some time after each transmission.

5.3.4.3 Ethernet network topology

The B30 has three Ethernet ports. Each Ethernet port must belong to a different network or subnetwork. Configure the IP address and subnet to ensure that each port meets this requirement. Two subnets are different when the bitwise AND operation performed between their respective IP address and mask produces a different result. Communication becomes unpredictable when more than one port is configured to the same subnet.

Example 1

IP1/Mask1: 10.1.1.2/255.255.255.0 (where LAN 1 is 10.1.1.x/255.255.255.0)

IP2/Mask2: 10.2.1.2/255.255.255.0 (where LAN2 is 10.2.1.x/255.255.255.0)

IP3/Mask3: 10.3.1.2/255.255.255.0 (where LAN3 is 10.3.1.x/255.255.255.0)

Example 2

IP1/Mask1: 10.1.1.2/255.0.0.0 (where LAN1 is 10.x.x.x/255.0.0.0)

IP2/Mask2: 11.1.1.2/255.0.0.0 (where LAN2 is 11.x.x.x/255.0.0.0)

IP3/Mask3: 12.1.1.2/255.0.0.0 (where LAN3 is 12.x.x.x/255.0.0.0)

Example 3 — Incorrect

IP1/Mask1: 10.1.1.2/255.0.0.0

IP2/Mask2: 10.2.1.2/255.0.0.0

IP3/Mask3: 10.3.1.2/255.0.0.0

This example is incorrect because the mask of 255.0.0.0 used for the three IP addresses makes them belong to the same network of 10.x.x.x.

Single LAN, no redundancy

The topology shown in the following figure allows communications to SCADA, local configuration/monitoring through EnerVista, and access to the public network shared on the same LAN. No redundancy is provided.

Figure 5-5: Network configuration for single LAN

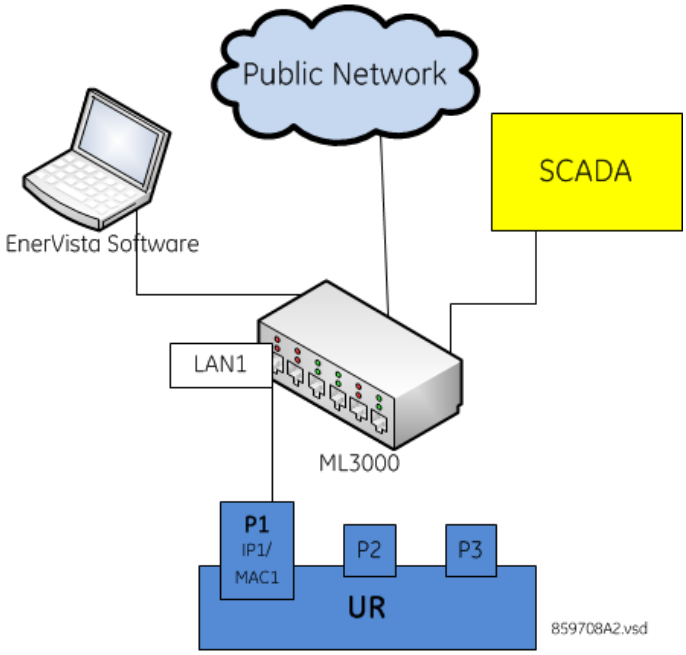

Multiple LANS, with redundancy

The following topology provides local configuration/monitoring through EnerVista software and access to the public network shared on LAN1, to which port 1 (P1) is connected. There is no redundancy provided on LAN1. Communications to SCADA is provided through LAN2. P2 and P3 are connected to LAN2, where P2 is the primary channel and P3 is the redundant channel. In this configuration, P3 uses the IP and MAC addresses of P2.

Figure 5-6: Multiple LANs, with redundancy

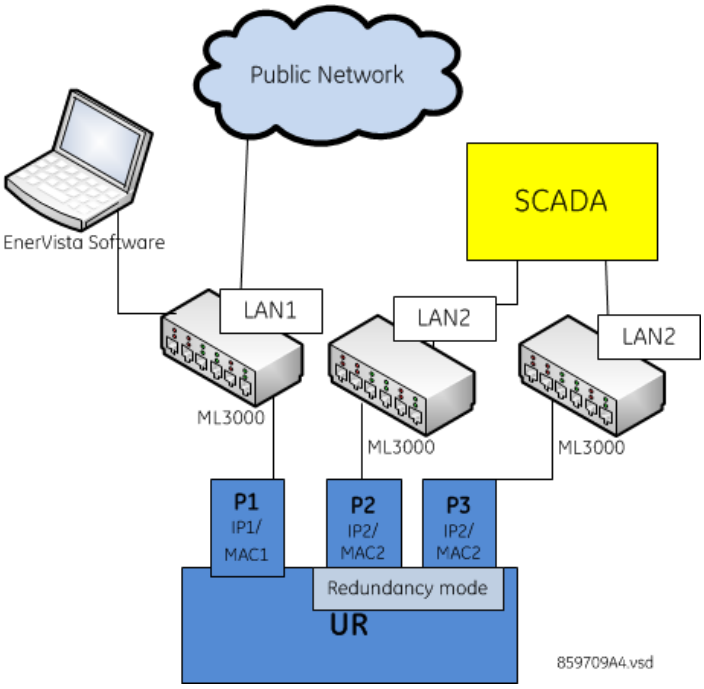

5

Multiple LANS, no redundancy

The following topology provides local configuration/monitoring through EnerVista software on LAN1, to which port 1 (P1) is connected, access to the public network on LAN2, to which port 2 (P2) is connected, and communications with SCADA on LAN3, to which port 3 (P3) is connected. There is no redundancy.

Figure 5-7: Multiple LANS, no redundancy

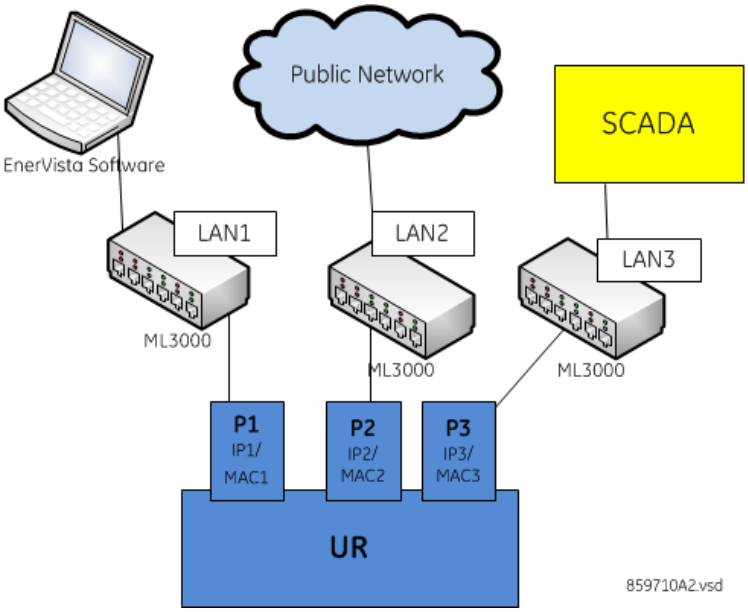

5.3.4.4 Network

As outlined in the previous section, when using more than one Ethernet port, configure each to belong to a different network or subnet using the IP addresses and mask. Configure the network IP and subnet settings before configuring the routing settings.

Follow the IP and subnet mask rules outlined in the Set IP Address in UR section of the Installation chapter.

To obtain a list of all port numbers used, for example for audit purposes, contact GE technical support with substantiating information, such as the serial number and order code of your device.

SETTINGS ⇨ PRODUCT SETUP ⇨⇩ COMMUNICATIONS ⇨⇩ NETWORK 1(3)

■ **NETWORK PORT 1** ■	⇔	**PRT1 IP ADDRESS:** **127.0.0.1**	Range: standard IPV4 address format
	⇩	**PRT1 SUBNET IP MASK:** **255.0.0.0**	Range: standard IPV4 address format
	⇩	**PRT1 FUNCTION:** **Enabled**	Range: Enabled, Disabled
■ **NETWORK PORT 2** ■	⇔	**PRT2 IP ADDRESS:** **127.0.0.1**	Range: standard IPV4 address format
	⇩	**PRT2 SUBNET IP MASK:** **255.0.0.0**	Range: standard IPV4 address format
	⇩	**PRT2 REDUNDANCY:** **None**	Range: None, Failover, PRP Range if no PRP license: None, Failover
	⇩	**PRP MCST ADDR:** **01154E000100**	Range: 01-15-4E-00-01-00 to 01-15-4E-00-01-FF
	⇩	**PRT2 FUNCTION:** **Enabled**	Range: Enabled, Disabled
■ **NETWORK PORT 3** ■	⇔	**PRT3 IP ADDRESS:** **127.0.0.1**	Range: standard IPV4 address format
	⇩	**PRT3 SUBNET IP MASK:** **255.0.0.0**	Range: standard IPV4 address format
	⇩	**PRT3 FUNCTION:** **Enabled**	Range: Enabled, Disabled

The IP addresses are used with the DNP, Modbus/TCP, IEC 61580, IEC 60870-5-104, TFTP, HTTP, and PRP protocols. PRP is explained in its own section later.

Use the front panel to change these settings. When online, the EnerVista software can be used to enable/disable each port only. In the Offline Window area, all settings can be changed except port 2 redundancy.

PRT1 (2 or 3) IP ADDRESS — This setting sets the port's IPv4 address in standard IPV4 format. This setting is valid on port 3 if port 2 **REDUNDANCY** is set to None.

PRT1 (2 or 3) SUBNET MASK — This setting sets the port's IPv4 subnet mask in standard IPV4 format. This setting is valid on port 3 if port 2 **REDUNDANCY** is set to None.

PRT1 (2 or 3) FUNCTION — This setting enable/disables network communication on the respective port. When the port function is Disabled, the network traffic on this port is disabled. The PRT2 redundancy setting has no effect on this functionality. The change takes effect upon relay restart.

PRT2 REDUNDANCY — Determines if ports 2 and 3 operate in redundant or independent mode. If the software options in the order code include PRP, the available options are None, Failover, and PRP. If the software options in the order code do not include PRP, the available options are None and Failover. In non-redundant mode (**REDUNDANCY** set to None), ports 2 and 3 operate independently with their own MAC, IP, and mask addresses. If **REDUNDANCY** is set to Failover, the operation of ports 2 and 3 is as follows:

- Ports 2 and 3 use the port 2 MAC address, IP address, and mask
- The configuration fields for IP address and mask on port 3 are hidden
- Port 3 is in standby mode and does not actively communicate on the Ethernet network but monitors its link to the Multilink switch. If port 2 detects a problem with the link, communications is switched to Port 3. Port 3 is, in effect, acting as a redundant or backup link to the network for port 2. Once port 2 detects that the link between itself and the switch is good and that communication is healthy for five minutes, then switching back to port 2 is performed. The delay in switching back ensures that rebooted switching devices connected to the B30, which signal their ports as active prior to being completely functional, have time to completely initialize themselves and become active. Once port 2 is active again, port 3 returns to standby mode.

If **REDUNDANCY** is set to PRP, the operation of ports 2 and 3 is as follows:

- Ports 2 and 3 use the port 2 MAC address, IP address, and mask
- The configuration fields for IP address and mask on port 3 are overwritten with those from port 2. This is visible on the front panel but not displayed in the EnerVista software.
- Port 2 **MCST ADDRESS** field is visible
- The port 2 PTP function still uses only port 2 and the port 3 PTP function still uses only port 3. The relay still synchronizes to whichever port has the best master. When ports 2 and 3 see the same master, as is typically the case for PRP networks, the port with the better connectivity is used.

Behavior for GOOSE messages is as follows:

- If **REDUNDANCY** is set to Failover or PRP, In order to transmit a GOOSE message on port 2, the CID file must be configured to have the corresponding GSE element in both ConnectedAPs S2 and S3. In the EnerVista software, the **TxGOOSE PORT ASSIGNMENT** needs to be "Ports-1,2,3" to transmit GOOSE on both ports 1 and 2, or "Ports-2,3" to have GOOSE only on port 2, with failover/ PRP.
- If **REDUNDANCY** is set to PRP, the port 2 configured GOOSE message is simultaneously transmitted on ports 2 and 3
- If **REDUNDANCY** is set to failover and the port 2 link fails, then only the port 2 configured GOOSE message is transmitted on port 3

NOTE

The two ports must be connected to completely independent LANs with no single point of failure, such as common power supplies that feed switches on both LANs.

When **REDUNDANCY** is set to PRP or failover and the network path with resolved default gateway is broken, then the ARP table needs approximately five seconds to rebuild. The layer 2 protocols (GOOSE and PTP) are not affected. However, the TCP/IP or UDP protocols (MMS connections, DNP3.0, and so on) can require reconnection if their active connection does not ride through re-transmission frames.

For any changes to this setting to take effect, restart the unit.

PRT2 PRP MCST ADDR — This setting allows the user to change the multicast address used by the PRP supervision frames. This setting is available if **REDUNDANCY** is set to PRP. All devices in the same PRP network need to have the same multicast address. Choose an address that does not conflict with another multicast protocol.

5.3.4.5 Far-End Fault Indication (FEFI)

Since 100BASE-FX does not support Auto-Negotiation, a Far-End Fault Indication (FEFI) feature is included since UR 7 that allows for detection of link failures.

The purpose of the Far-End Fault feature is to allow the stations on both ends of a pair of fibers to be informed when there is a problem with one of the fibers. Without the Far-End Fault feature, it is impossible for a fiber interface to detect a problem that affects only its transmit fiber.

When the Far-End Fault feature is supported, a loss of receive signal (link) causes the transmitter to generate a Far-End Fault pattern in order to inform the device at the far end of the fiber pair that a fault has occurred.

When the local receiver again detects a signal, the local transmitter automatically returns to normal operation.

If a Far-End Fault pattern is received by a fiber interface that supports the Far-End Fault feature and it is enabled, it reacts by dropping the link as if there were no signal at all.

If the receiving interface does not support the Far-End Fault feature or has it disabled, an incoming Far-End Fault pattern is ignored.

It is strongly recommended to have switches used for substation automation that support the Far-End Fault feature, especially when UR 7 redundancy Failover is selected for redundancy.

5.3.4.6 Parallel Redundancy Protocol (PRP)

SOFTWARE OPTION

The B30 is provided with optional PRP capability. This feature is specified as a software option at the time of ordering. See the Order Codes section in chapter 2 for details.

The Parallel Redundancy Protocol (PRP) defines a redundancy protocol for high availability in substation automation networks. It applies to networks based on Ethernet technology (ISO/IEC 8802-3) and is based on the second edition (July 2012) of IEC 62439-3, clause 4.

PRP is designed to provide seamless recovery in case of a single failure in the network, by using a combination of LAN duplication and frame duplication. Identical frames are sent on two completely independent networks that connect source and destination. Under normal circumstances both frames reach the destination and one of them is sent up the OSI stack to the destination application, while the second one is discarded. If an error occurs in one of the networks and traffic is prevented from flowing on that path, connectivity is provided through the other network to ensure continuous communication. Take care when designing the two LANs, so that no single point of failure (such as a common power supply) is encountered, as such scenarios can bring down both LANs simultaneously.

Figure 5-8: Example of parallel redundant network

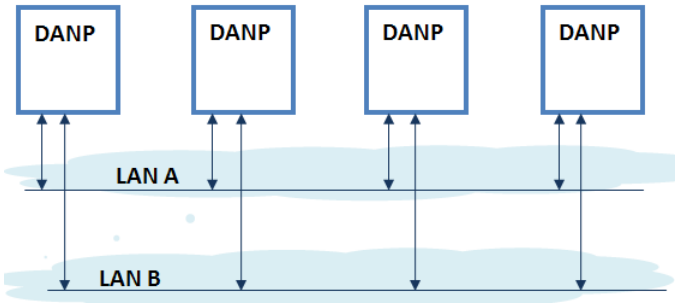

PRP uses specialized nodes called doubly attached nodes (DANPs) for handling the duplicated frames. DANP devices have an additional module, called a Link Redundancy Entity (LRE). LRE is responsible for duplicating frames and adding the specific PRP trailer when sending the frames out on the LAN, as well as making decisions on received frames as to which one is sent up the OSI stack to the application layer and which one is discarded. LRE is responsible for making PRP transparent to the higher layers of the stack.

In addition, there is a second type of specialized device used in PRP networks, called RedBox, with the role of connecting Single Attached Nodes (SANs) to a redundant network.

UR relays implement the DANP functionality. The RedBox functionality is not implemented.

The original standard IEC 62439-3 (2010) was amended to align PRP with the High-availability Seamless Redundancy (HSR) protocol. To achieve this, the original PRP was modified at the cost of losing compatibility with the PRP 2010 version. The revised standard IEC 62439-3 (2012) is commonly referred to as PRP-1, while the original standard is PRP-0. The UR relays support PRP-1.

The relay implements PRP on two of its Ethernet ports, specifically Ports 2 and 3 of the CPU module. Use the previous section (network port configuration) to configure PRP.

PRP is purchased as a separate option. If purchased (valid order code), PRP can be enabled in configuration through a setting available on the network configuration menu, REDUNDANCY, which already has the capability of enabling failover redundancy. The options on this setting must be changed to accommodate two types of redundancy: failover and PRP. When REDUNDANCY is set to either failover or PRP, the ports dedicated for PRP (Ports 2 and 3) operate in redundant mode. In this mode, Port 3 uses the MAC, IP address, and mask of Port 2.

5.3.4.7 IPv4 route table

SETTINGS ⇨ PRODUCT SETUP ⇨⇩ COMMUNICATIONS ⇨⇩ IPv4 ROUTE TABLE 1(6)

■ IPv4 ROUTE TABLE ■	⇔	■ DEFAULT IPv4 ROUTE ■
	⇕	■ IPv4 NETWORK ■ ROUTE 1
		⇩
	⇧	■ IPv4 NETWORK ■ ROUTE 6

A default route and up to six static routes can be configured.

The default route is used as the last choice when no other route towards a given destination is found.

■ DEFAULT IPv4 ROUTE ■	⇔	GATEWAY ADDRESS: 127.0.0.1	Range: standard IPV4 unicast address format
■ IPv4 NETWORK ■ ROUTE 1	⇔	RT1 DESTINATION: 127.0.0.1	Range: standard IPV4 address format
	⇕	RT1 NET MASK: 255.0.0.0	Range: standard IPV4 subnet mask format
	⇧	RT1 GATEWAY: 127.0.0.1	Range: standard IPV4 unicast address format

Configure the network IP and subnet settings before configuring the routing settings.

Add and delete static routes

Host routes are not supported at present.

The routing table configuration is available on the serial port and front panel. This is a deliberate decision, to avoid loss of connectivity when remotely configuring the B30.

By default, the value of the destination field is 127.0.0.1 for all static routes (1 to 6). This is equivalent to saying that the static routes are not configured. When the destination address is 127.0.0.1, the mask and gateway also must be kept on default values.

By default, the value of the route gateway address is 127.0.0.1. This means that the default route is not configured.

To add a route:

1. Use any of the static network route entries numbered 1 to 6 to configure a static network route. Once a route destination is configured for any of the entries 1 to 6, that entry becomes a static route and it must meet all the rules listed in the next section, General Conditions to be Satisfied by Static Routes.
2. To configure the default route, enter a default gateway address. Once a default gateway address is configured, it must be validated against condition 2 of the General Conditions to be Satisfied by Static Routes, where the route gateway must be on a connected network.

To delete a route:

1. Replace the route destination with the default loopback address of 127.0.0.1. When deleting a route, the mask and gateway also must be brought back to default values.

2. Delete the default route by replacing the default gateway with the default value of 127.0.0.1.

General conditions to be satisfied by static routes

The following rules are validated internally:

- The route mask has IP mask format. In binary this needs to be a set of contiguous bits of 1 from left to right, followed by one or more contiguous bits of 0.
- The route destination and mask must match. This can be verified by checking that
  RtDestination and RtMask = RtDestination
  Example of good configuration: RtDestination = 10.1.1.0; Rt Mask = 255.255.255.0
  Example of bad configuration: RtDestination = 10.1.1.1; Rt Mask = 255.255.255.0

The following rules must be observed when you configure static routes:

- The route destination must not be a connected network
- The route gateway must be on a connected network. This rule applies to the gateway address of the default route as well. This can be verified by checking that:
  (RtGwy & Prt1Mask) == (Prt1IP & Prt1Mask) || (RtGwy & Prt2Mask) == (Prt2IP & Prt2Mask) || (RtGwy & Prt3Mask) == (Prt3IP & Prt3Mask)

  where

  & is the bitwise-AND operator

  == is the equality operator

  || is the logical OR operator

Routing behavior compared to previous releases

Prior to release 7.10, UR devices did not have an explicit manner of configuring routes. The only available route was the default route configured as part of the network settings (port gateway IP address). This limited the ability to route to specific destinations, particularly if these destinations were reachable through a different interface than the one on which the default gateway was.

Starting with UR 7.10, up to six static network routes can be configured in addition to a default route. The default route configuration was also moved from the network settings into the routing section.

The figure shows an example of topology that benefits from the addition of static routes.

Figure 5-9: Using static routes

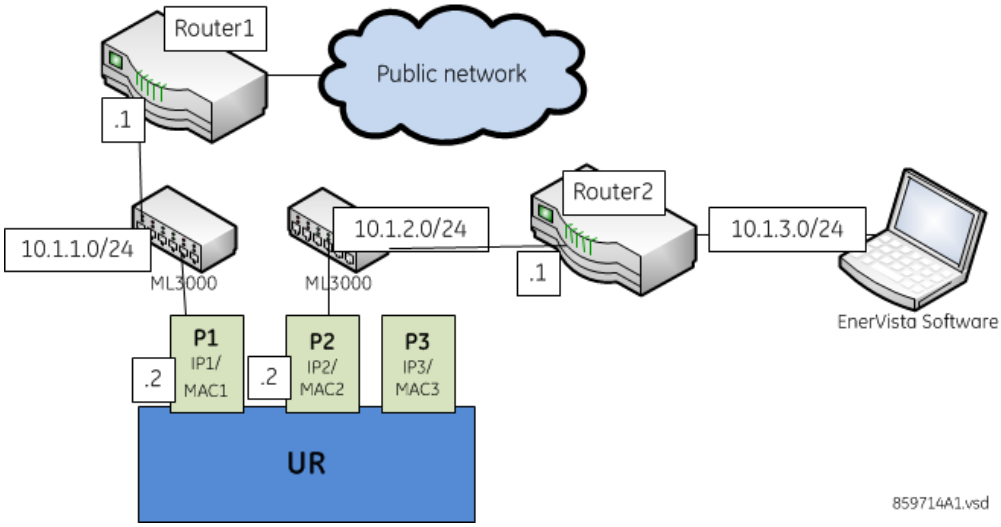

In the figure, the UR connects through the following two Ethernet ports:

- Port 1 (IP address 10.1.1.2) connects the UR to LAN 10.1.1.0/24 and to the Internet through Router1. Router1 has an interface on 10.1.1.0/24 and the IP address of this interface is 10.1.1.1.
- Port 2 (IP address 10.1.2.2) connects the UR to LAN 10.1.2.0/24 and to the EnerVista software through Router2. Router2 has an interface on 10.1.2.0/24 and the IP address of this interface is 10.1.2.1.

The configuration before release 7.10 was as follows:

- PRT1 IP ADDRESS = 10.1.1.2
  PRT1 SUBNET IP MASK = 255.255.255.0
  PRT1 GWY IP ADDRESS = 10.1.1.1
  PRT2 IP ADDRESS = 10.1.2.2
  PRT2 SUBNET IP MASK = 255.255.255.0

The behavior before release 7.10 was as follows. When sending packets to EnerVista, the UR noticed that the destination was not on a connected network and it tried to find a route to destination. Since the default route was the only route it knew, it used it. Yet EnerVista was on a private network, which was not reachable through Router1. Hence a destination unreachable message was received from the router.

The configuration starting with release 7.10 is as follows:

- PRT1 IP ADDRESS = 10.1.1.2
  PRT1 SUBNET IP MASK = 255.255.255.0
  PRT2 IP ADDRESS = 10.1.2.2
  PRT2 SUBNET IP MASK = 255.255.255.0
  IPV4 DEFAULT ROUTE: GATEWAY ADDRESS = 10.1.1.1
  STATIC NETWORK ROUTE 1: RT1 DESTINATION = 10.1.3.0/24; RT1 NET MASK = 255.255.255.0; and RT1 GATEWAY = 10.1.2.1

The behavior since release 7.10 is as follows. There is one added static network route to the destination 10.1.3.0/24, where a computer running EnerVista is located. This static route uses a different gateway (10.1.2.1) than the default route. This gateway is the address of Router2, which has knowledge about 10.1.3.0 and is able to route packets coming from the UR and destined to EnerVista.

Show routes and ARP tables

This feature is available on the Web interface, where the main menu contains an additional Communications menu and two submenus:

- Routing Table
- ARP Table

The tables outline the information displayed when the two submenus are selected.

Table 5-7: Routing table information

Field	Description
Destination	The IP address of the remote network to which this route points
Mask	The network mask for the destination
Gateway	The IP address of the next router to the remote network
Interface	Interface through which the specified network can be reached

Table 5-8: IP ARP information

Field	Description
IP Address	The network address that corresponds to Hardware Address
Age (min)	Age, in minutes, of the cache entry. A hyphen (-) means the address is local.
Hardware Address	LAN hardware address, a MAC address that corresponds to network address
Type	Dynamic or Static
Interface	Interface to which this address mapping has been assigned

5.3.4.8 Modbus protocol

SETTINGS ⇨ PRODUCT SETUP ⇨⇩ COMMUNICATIONS ⇨⇩ MODBUS PROTOCOL

■ **MODBUS PROTOCOL** ■	⇔	**MODBUS SLAVE ADDRESS: 254**	Range: 1 to 254 in steps of 1
	⇧	**MODBUS TCP PORT NUMBER(502): 502**	Range: 0 to 65535 in steps of 1

The serial communication ports utilize the Modbus protocol, unless the port is configured for DNP or IEC 60870-5-103 operation. This allows the EnerVista UR Setup software to be used on the port. UR devices operate as Modbus slave devices only.

For more information on the protocol, including the memory map table, see the UR Family Communications Guide.

MODBUS SLAVE ADDRESS — When using the Modbus protocol on the RS232 port, the B30 responds regardless of the **MODBUS SLAVE ADDRESS** programmed. For the RS485 port, each device on the serial bus must have a unique slave address from 1 to 254. Address 0 and addresses from 248 and up are reserved by the Modbus protocol specification, and so their use here is not recommended. Address 0 is the broadcast address to which all Modbus slave devices listen. Addresses do not have to be sequential, but no two devices can have the same address or conflicts resulting in errors occur. Generally, starting at 1, set each device added to the link to use the next higher address. When using Modbus TCP/IP, the client must use the programmed **MODBUS SLAVE ADDRESS** value in the Unit Identifier field.

MODBUS TCP PORT NUMBER — Modbus over TCP/IP can also be used on any of the Ethernet ports. The listening TCP port 502 is reserved for Modbus communications, and only in exceptional cases when **MODBUS TCP PORT NUMBER** is set to any other port. The **MODBUS TCP PORT NUMBER** setting sets the TCP port used by Modbus on Ethernet. A **MODBUS TCP PORT NUMBER** of 0 disables Modbus over TCP/IP, meaning closes the Modbus TCP port. When the port number is changed to 0, the change takes effect when the B30 is restarted. When it is set to 0, use the front panel or serial port to communicate with the relay.

5

NOTE

Do not set more than one protocol to the same TCP/UDP port number, as this results in unreliable operation of those protocols.

5.3.4.9 Protocol selection

SETTINGS ⇨ PRODUCT SETUP ⇨⇩ COMMUNICATIONS ⇨⇩ PROTOCOL

■ **PROTOCOL** ■	⇔	**SCADA PROTOCOL: DNP 3.0**	Range: DNP 3.0, IEC 60870-5-104, IEC 60870-5-103
	⇧	**MMS CONNECTION TIMEOUT: 120 s**	Range: 10 to 7200 in steps of 10

The **PROTOCOL** menu allows selection of one of the following protocols: DNP 3.0, IEC60870-104, or IEC60870-103.

SCADA PROTOCOL — This setting selects the SCADA protocol on which the unit communicates, among DNP3.0, IEC 60870-104, and IEC 60870-103, with DNP being the default. Options depend on order code. For any change to take effect, restart the unit.

MMS CONNECTION TIMEOUT — This setting specifies a time delay for the detection of network TCP connection lost. If there is no data traffic on the TCP connection for greater than the time specified by this setting, the connection is terminated. This frees up the connection to be re-used by a client. A setting of 10 seconds disables this timer. The TCP connection then is managed by a standard TCP KeepAlive message sequence. These messages are transmitted every 20 seconds when there is no MMS communication between the relay and the client. If there are no responses to the TCP KeepAlive messages, the connection is closed. For any change to this setting to take effect, restart the unit. The change takes effect for a new connection. For any existing open connection when the change is made, close and re-open the connection. Cycling power to the relay also applies the new setting.

The table shows which of DNP 3.0, IEC 60870-5-104, IEC 60870-5-103, and IEC 61850 protocols are operational on the RS232, RS485, and Ethernet ports. It shows all possible combinations of the **PROTOCOL** and **DNP CHANNEL 1(2) PORT** settings.

Table 5-9: Port and protocol combinations

PROTOCOL setting	DNP CHANNEL 1(2) PORT settings	RS232	RS485	Ethernet
DNP	Channel 1: Eth TCP Channel 2: Eth TCP	Modbus	Modbus	DNP, Modbus, IEC 61850
	Channel 1: Eth TCP Channel 2: none	Modbus	Modbus	DNP, Modbus, IEC 61850
	Channel 1: none Channel 2: Eth TCP	Modbus	Modbus	DNP, Modbus, IEC 61850
	Channel 1: Eth UDP Channel 2: none	Modbus	Modbus	DNP, Modbus, IEC 61850
	Channel 1: Eth TCP Channel 2: RS485	Modbus	DNP	DNP, Modbus, IEC 61850
	Channel 1: Eth TCP Channel 2: RS232	DNP	Modbus	DNP, Modbus, IEC 61850
	Channel 1: Eth UDP Channel 2: RS485	Modbus	DNP	DNP, Modbus, IEC 61850
	Channel 1: Eth UDP Channel 2: RS232	DNP	Modbus	DNP, Modbus, IEC 61850
	Channel 1: RS485 Channel 2: Eth TCP	Modbus	DNP	DNP, Modbus, IEC 61850
	Channel 1: RS232 Channel 2: Eth TCP	DNP	Modbus	DNP, Modbus, IEC 61850
	Channel 1: RS485 Channel 2: RS232	DNP	DNP	Modbus, IEC 61850
	Channel 1: RS232 Channel 2: RS485	DNP	DNP	Modbus, IEC 61850
	Channel 1: RS485 Channel 2: none	Modbus	DNP	Modbus, IEC 61850
IEC 104		Modbus	Modbus	IEC 104, Modbus, IEC 61850
IEC 103		Modbus	IEC 103	Modbus, IEC 61850

5

5.3.4.10 DNP protocol

SETTINGS ⇨ PRODUCT SETUP ⇨⇩ COMMUNICATIONS ⇨⇩ DNP PROTOCOL

■ DNP PROTOCOL ■	⇔	■ DNP CHANNELS ■	See below
	⇩	DNP ADDRESS: 1	Range: 0 to 65535 in steps of 1
	⇩	■ DNP NETWORK ■ CLIENT ADDRESSES	See below
	⇩	DNP TCP/UDP PORT NUMBER(20000): 20000	Range: 0 to 65535 in steps of 1
	⇩	DNP UNSOL RESPONSE FUNCTION: Disabled	Range: Enabled, Disabled
	⇩	DNP UNSOL RESPONSE TIMEOUT: 5 s	Range: 0 to 60 s in steps of 1
	⇩	DNP UNSOL RESPONSE MAX RETRIES: 10	Range: 1 to 255 in steps of 1
	⇩	DNP UNSOL RESPONSE DEST ADDRESS: 1	Range: 0 to 65519 in steps of 1
	⇩	DNP CURRENT SCALE FACTOR: 1	Range: 0.001, 0.01. 0.1, 1, 10, 100, 1000, 10000, 100000

⇕	DNP VOLTAGE SCALE FACTOR: 1	Range: 0.001, 0.01. 0.1, 1, 10, 100, 1000, 10000, 100000
⇕	DNP POWER SCALE FACTOR: 1	Range: 0.001, 0.01. 0.1, 1, 10, 100, 1000, 10000, 100000
⇕	DNP ENERGY SCALE FACTOR: 1	Range: 0.001, 0.01. 0.1, 1, 10, 100, 1000, 10000, 100000
⇕	DNP PF SCALE FACTOR: 1	Range: 0.001, 0.01. 0.1, 1, 10, 100, 1000, 10000, 100000
⇕	DNP OTHER SCALE FACTOR: 1	Range: 0 to 100000000 in steps of 1
⇕	DNP CURRENT DEFAULT DEADBAND: 30000	Range: 0 to 100000000 in steps of 1
⇕	DNP VOLTAGE DEFAULT DEADBAND: 30000	Range: 0 to 100000000 in steps of 1
⇕	DNP POWER DEFAULT DEADBAND: 30000	Range: 0 to 100000000 in steps of 1
⇕	DNP ENERGY DEFAULT DEADBAND: 30000	Range: 0 to 100000000 in steps of 1
⇕	DNP PF DEFAULT DEADBAND: 30000	Range: 0 to 100000000 in steps of 1
⇕	DNP OTHER DEFAULT DEADBAND: 30000	Range: 0 to 100000000 in steps of 1
⇕	DNP TIME SYNC IIN PERIOD: 1440 min	Range: 1 to 10080 min. in steps of 1
⇕	DNP MESSAGE FRAGMENT SIZE: 240	Range: 30 to 2048 in steps of 1
⇕	DNP OBJECT 1 DEFAULT VARIATION: 2	Range: 1, 2
⇕	DNP OBJECT 2 DEFAULT VARIATION: 2	Range: 1, 2, 3
⇕	DNP OBJECT 20 DEFAULT VARIATION: 1	Range: 1, 2, 5, 6
⇕	DNP OBJECT 21 DEFAULT VARIATION: 1	Range: 1, 2, 9, 10
⇕	DNP OBJECT 22 DEFAULT VARIATION: 1	Range: 1, 2, 5, 6
⇕	DNP OBJECT 23 DEFAULT VARIATION: 1	Range: 1, 2, 5, 6
⇕	DNP OBJECT 30 DEFAULT VARIATION: 1	Range: 1, 2, 3, 4, 5
⇕	DNP OBJECT 32 DEFAULT VARIATION: 1	Range: 1, 2, 3, 4, 5, 7
⇕	DNP NUMBER OF PAIRED CONTROL POINTS: 0	Range: 0 to 32 in steps of 1
⇕	DNP TCP CONNECTION TIMEOUT: 120 s	Range: 10 to 7200 s in steps of 1
⇧	DNP EVENT TIME BASE: LOCAL	Range: UTC, LOCAL

The Distributed Network Protocol (DNP) allows for the optimization of control and data acquisition between the equipment in the substation and the central control center. The protocol is scalable; that is, it is designed to be compatible with the latest high speed LAN technology yet still be implemented over slower speed serial links.

The DNP improves upon many master-slave protocols by improving overall communication performance requirements and provides time-stamping with millisecond accuracy.

The B30 supports the Distributed Network Protocol (DNP) version 3.0. DNP is enabled when the **SETTINGS ⇨ PRODUCT SETUP ⇨⇩ COMMUNICATIONS ⇨ PROTOCOL** setting is set to DNP 3.0. The B30 can be used as a DNP slave device connected to multiple DNP masters (usually an RTU or a SCADA master station). Since the B30 maintains two sets of DNP data change buffers and connection information, two DNP masters can actively communicate with the B30 at one time.

See the UR Family Communications Guide for more information on DNP.

NOTE For any change to DNP settings, restart the relay.

The DNP Channels sub-menu is shown.

SETTINGS ⇨ PRODUCT SETUP ⇨⇩ COMMUNICATIONS ⇨⇩ DNP PROTOCOL ⇨ DNP CHANNELS

■ **DNP CHANNELS** ■	⇔	**DNP CHANNEL 1 PORT:** **NONE**	Range: NONE, COM1 - RS485, COM2 - RS485, FRONT PANEL - RS232, NETWORK - TCP, NETWORK - UDP
	⇧	**DNP CHANNEL 2 PORT:** **NONE**	Range: NONE, COM1 - RS485, COM2 - RS485, FRONT PANEL - RS232, NETWORK - TCP

5

The **DNP CHANNEL 1 PORT** and **DNP CHANNEL 2 PORT** settings select the communications port assigned to the DNP protocol for each channel. Once DNP is assigned to a serial port, DNP is the only protocol running on that port; Modbus or IEC 60870-5-103 are disabled. If DNP is assigned to RS485, the protocol must be set to DNP on the serial port configuration as well, for the change to take effect. When the **DNP CHANNEL 1(2) PORT** setting is set to "Network - TCP," the channel 1(2) DNP protocol can be used over TCP/IP on the Ethernet ports. When this value is set to "Network - UDP," the DNP protocol can be used over UDP/IP on channel 1 only.

NOTE Do not set more than one protocol to the same TCP/UDP port number, as this results in unreliable operation of those protocols.

The **DNP ADDRESS** setting is the DNP slave address. This number identifies the B30 on a DNP communications link. Assign a unique address to each DNP slave.

The B30 can specify a maximum of five clients for its DNP connections. These are IP addresses for the controllers to which the B30 can connect. The settings follow.

SETTINGS ⇨ PRODUCT SETUP ⇨⇩ COMMUNICATIONS ⇨⇩ DNP PROTOCOL ⇨ DNP NETWORK CLIENT ADDRESSES

■ **DNP NETWORK** ■ **CLIENT ADDRESSES**	⇔	**CLIENT ADDRESS 1:** **0.0.0.0**	Range: standard IP address
		⇩	
	⇧	**CLIENT ADDRESS 5:** **0.0.0.0**	Range: standard IP address

The **DNP TCP/UDP PORT NUMBER** setting is for normal DNP operation. To close the port, set the port number to 0.

The **DNP UNSOL RESPONSE FUNCTION** is set to "Disabled" for RS485 applications since there is no collision avoidance mechanism. The **DNP UNSOL RESPONSE TIMEOUT** sets the time the B30 waits for a DNP master to confirm an unsolicited response. The **DNP UNSOL RESPONSE MAX RETRIES** setting determines the number of times the B30 retransmits an unsolicited response without receiving confirmation from the master; a value of "255" allows infinite re-tries. The **DNP UNSOL RESPONSE DEST ADDRESS** is the DNP address to which all unsolicited responses are sent. The IP address to which solicited responses are sent is determined by the B30 from the current TCP connection or the most recent UDP message.

The DNP scale factor settings are numbers used to scale analog input point values. These settings group the B30 analog input data into the following types: current, voltage, power, energy, power factor, and other. Each setting represents the scale factor for all analog input points of that type. For example, if the **DNP VOLTAGE SCALE FACTOR** setting is set to "1000," all DNP analog input points that are voltages are returned with values 1000 times smaller (for example, a value of 72000 V on the B30 is returned as 72). These settings are useful when analog input values must be adjusted to fit within certain ranges in DNP masters. Note that a scale factor of 0.1 is equivalent to a multiplier of 10 (that is, the value is 10 times larger).

The **DNP DEFAULT DEADBAND** settings determine when to trigger unsolicited responses containing analog input data. These settings group the B30 analog input data into the following types: current, voltage, power, energy, power factor, and other. Each setting represents the default deadband value for all analog input points of that type. For example, to trigger unsolicited responses from the B30 when any current values change by 15 A, the **DNP CURRENT DEFAULT DEADBAND** setting is set to "15." Note that these settings are the deadband default values. DNP object 34 points can be used to change deadband values, from the default, for each individual DNP analog input point.

NOTE

B30 devices without CT and VT inputs do not support power metering or energy metering. As such, the **DNP POWER SCALE FACTOR** and **DNP POWER DEFAULT DEADBAND** settings and the **DNP ENERGY SCALE FACTOR** and **DNP ENERGY DEFAULT DEADBAND** settings do not apply to B30 devices without CT and VT inputs.

The **DNP TIME SYNC IIN PERIOD** setting determines how often the Need Time Internal Indication (IIN) bit is set by the B30. Changing this time allows the DNP master to send time synchronization commands more or less often, as required.

The **DNP MESSAGE FRAGMENT SIZE** setting determines the size, in bytes, at which message fragmentation occurs. Large fragment sizes allow for more efficient throughput; smaller fragment sizes cause more application layer confirmations to be necessary, which provides more robust data transfer over noisy communication channels.

NOTE

Check the "DNP Points Lists" B30 web page to view the analog inputs and/or binary inputs points lists. This page can be viewed with a web browser by entering the IP address of the B30 Ethernet port employed to access the B30 Main Menu, then by clicking the **Device Information Menu** item, then the **DNP Points Lists** item.

5

The **DNP OBJECT 1 DEFAULT VARIATION** to **DNP OBJECT 32 DEFAULT VARIATION** settings select the DNP default variation number for object types 1, 2, 20, 21, 22, 23, 30, and 32. The default variation refers to the variation response when variation 0 is requested and/or in class 0, 1, 2, or 3 scans. See the DNP Implementation section in the UR Family Communications Guide.

The DNP binary outputs typically map one-to-one to IED data points. That is, each DNP binary output controls a single physical or virtual control point in an IED. In the B30 relay, DNP binary outputs are mapped to virtual inputs. However, some legacy DNP implementations use a mapping of one DNP binary output to two physical or virtual control points to support the concept of trip/close (for circuit breakers) or raise/lower (for tap changers) using a single control point. That is, the DNP master can operate a single point for both trip and close, or raise and lower, operations. The B30 can be configured to support paired control points, with each paired control point operating two virtual inputs. The **DNP NUMBER OF PAIRED CONTROL POINTS** setting allows configuration of 0 to 32 binary output paired controls. Points not configured as paired operate on a one-to-one basis.

The **DNP TCP CONNECTION TIMEOUT** setting specifies a time delay for the detection of dead network TCP connections. If there is no data traffic on a DNP TCP connection for greater than the time specified by this setting, the connection is aborted by the B30. This frees up the connection to be re-used by a client.

NOTE

For any change to DNP settings, restart the relay.

5.3.4.11 DNP / IEC 60870-5-104 point lists

SETTINGS ⇨ PRODUCT SETUP ⇨⇩ COMMUNICATIONS ⇨⇩ DNP / IEC104 POINT LISTS

■ DNP / IEC104 ■ POINT LISTS	⇔	■ BINARY INPUT / MSP ■ POINTS	See below
	⇧	■ ANALOG INPUT / MME ■ POINTS	See below

Up to 256 binary and up to 256 analog input points for the DNP protocol, or the MSP and MME points for IEC 60870-5-104 protocol, can be configured. The value for each point is user-programmable and can be configured by assigning FlexLogic operands for binary inputs / MSP points or FlexAnalog parameters for analog inputs / MME points.

The menu for the binary input points (DNP) or MSP points (IEC 60870-5-104) follows.

SETTINGS ⇨ PRODUCT SETUP ⇨⇩ COMMUNICATIONS ⇨⇩ DNP / IEC104 POINT LISTS ⇨ BINARY INPUT / MSP POINTS

■ BINARY INPUT / MSP ■ POINTS	⇔	Point: 0 Off	Range: FlexLogic operand
	⇩	Point: 1 Off	Range: FlexLogic operand
		⇩	
	⇧	Point: 255 Off	Range: FlexLogic operand

Up to 256 binary input points can be configured for the DNP or IEC 60870-5-104 protocols. The points are configured by assigning an appropriate FlexLogic operand. See the Introduction to FlexLogic section in this chapter for the range of assignable operands.

Changes to the DNP / IEC 60870-5-104 point lists take effect when the B30 is restarted.

The menu for the analog input points (DNP) or MME points (IEC 60870-5-104) follows.

SETTINGS ⇨ PRODUCT SETUP ⇨⇩ COMMUNICATIONS ⇨⇩ DNP / IEC104 POINT LISTS ⇨⇩ ANALOG INPUT / MME POINTS

■ ANALOG INPUT / MME ■ POINTS	⇔	Point: 0 Off	Range: any FlexAnalog parameter
	⇩	Point: 1 Off	Range: any FlexAnalog parameter
		⇩	
	⇧	Point: 255 Off	Range: any FlexAnalog parameter

Up to 256 analog input points can be configured for the DNP or IEC 60870-5-104 protocols. The analog point list is configured by assigning an appropriate FlexAnalog parameter to each point. See the FlexAnalog Parameters section in Appendix A for the range of assignable parameters.

Changes to the DNP / IEC 60870-5-104 point lists take effect when the B30 is restarted.

NOTE

The DNP / IEC 60870-5-104 point lists always begin with point 0 and end at the first "Off" value. Since DNP / IEC 60870-5-104 point lists must be in one continuous block, any points assigned after the first "Off" point are ignored.

5.3.4.12 IEC 61850 protocol

SOFTWARE OPTION

The B30 is provided with optional IEC 61850 communications. This feature is specified as a software option at the time of ordering. See the Order Codes section in chapter 2 for details.

The IEC 61850 settings are accessible in EnerVista software or a substation configuration language (SCL) generating tool. The path is **Settings > Product Setup > Communications > IEC 61850** or **Settings > IEC 61850**. The settings are not accessible from the front panel of the device.

NOTE

IEC 61850 messaging can form part of protection schemes. Consider IEC 61850 settings with the same criticality as protection element settings. To ensure reliable performance of protection schemes utilizing IEC 61850 messaging, route IEC 61850 traffic on a separate port from SCADA communications, or use redundant, independent ports, and a high-speed network recovery method, such as PRP.

Overview

IEC 61850 is a series of international standards and technical reports applicable to power utility automation systems. It includes semantics, abstract communication services, specific communication services, performance specifications, network engineering guidelines, configuration description methodologies, and engineering processes. The standard enables interoperability among intelligent electronic devices (IEDs) from different suppliers and interoperability among software configuration tools from different suppliers. Interoperability in this case is the ability for IEDs to operate on the same network or communication path sharing information and commands, and for configuration tools to understand each other's configuration files.

The UR family supports a large subset of IEC 61850 features. These are detailed in the UR Family Communications Guide and include the information model, GOOSE publish, GOOSE subscribe, buffered report server, unbuffered report server, and Manufacturing Message Specification (MMS) query, read, write, and control services. In addition, the URs and their EnerVista UR Setup software support IEC 61850 Substation Configuration Language (SCL) file import/export and merging.

Whereas prior UR releases used edition 1.0 of IEC 61850, this release uses edition 2.0, with certain modifications according to IEC/TR 61850-90-5. Only edition 2.0 61850 configuration tools can interoperate with edition 2.0 devices, such as the UR 7.3x release. This UR release uses edition 2.0 SCL, which differs from edition 1.0 SCL. GSSE, fixed GOOSE, and fixed report services of previous releases are no longer supported, and thus UR devices of previous releases using these features have to be converted to configurable GOOSE to communicate with a 7.3x or later device.

Many settings of UR protection, control, and monitoring elements, that is to say elements that are not concerned with the IEC 61850 protocol, can nevertheless be accessed via IEC 61850. These settings are documented elsewhere in this Settings chapter. This section of the Settings chapter deals solely with the settings that configure the IEC 61850 protocol itself.

The maximum number of simultaneous clients supported by the UR family is five.

EnerVista setup for IEC 61850

The EnerVista UR Setup software provides the interface to configure B30 settings for the IEC 61850 protocol. This section describes this interface. The software also supports import/export and merging of IEC 61850 Substation Configuration Language (SCL) files as documented in the UR Family Communications Guide.

The IEC 61850 protocol configuration settings cannot be accessed through the UR front panel and are instead accessible with the EnerVista software, via MMS query, read, and write services, or via 61850 SCL file transfer. Accordingly, whereas other settings are presented in this manual as they appear on the front panel, IEC 61850 settings are presented as they appear in the software. See the UR Family Communications Guide for MMS and SCL access. Note that if you update the IEC 61850 settings in the EnerVista software by writing to them by MMS while the corresponding IEC 61850 panel is open in EnerVista, you need to close then open the panel in EnerVista for the correct readings to display.

IEC 61850 protocol configuration settings are accessed through software panels that are selected either in the **Online Window** area (see figure) or the **Offline Window** area in the EnerVista software.

The EnerVista software also includes an interface that is compatible with firmware versions 5.0 to 7.2 to configure subscribers. Use the Simplified GOOSE Configurator in the Offline Window area.

Figure 5-10: IEC 61850 protocol panel in EnerVista software

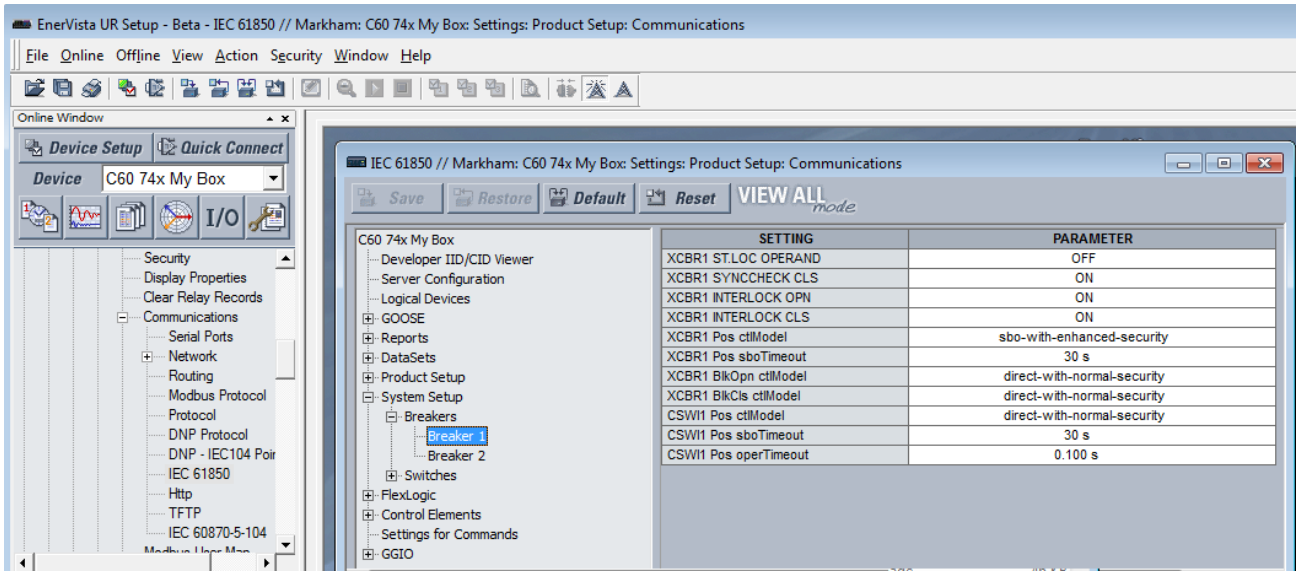

The IEC 61850 window is divided into a navigation pane on the left and a settings panel on the right. You expand and click an option on the left to display its panel on the right. The following figure shows an example for Server Configuration. The **SETTING** column contains the names of the settings, and the **PARAMETER** column is used to enter the settings. Hovering the mouse over a setting name displays a tool-tip showing the 61850 information model name of the setting or its location in SCL files.

5

Figure 5-11: IEC 61850 panel

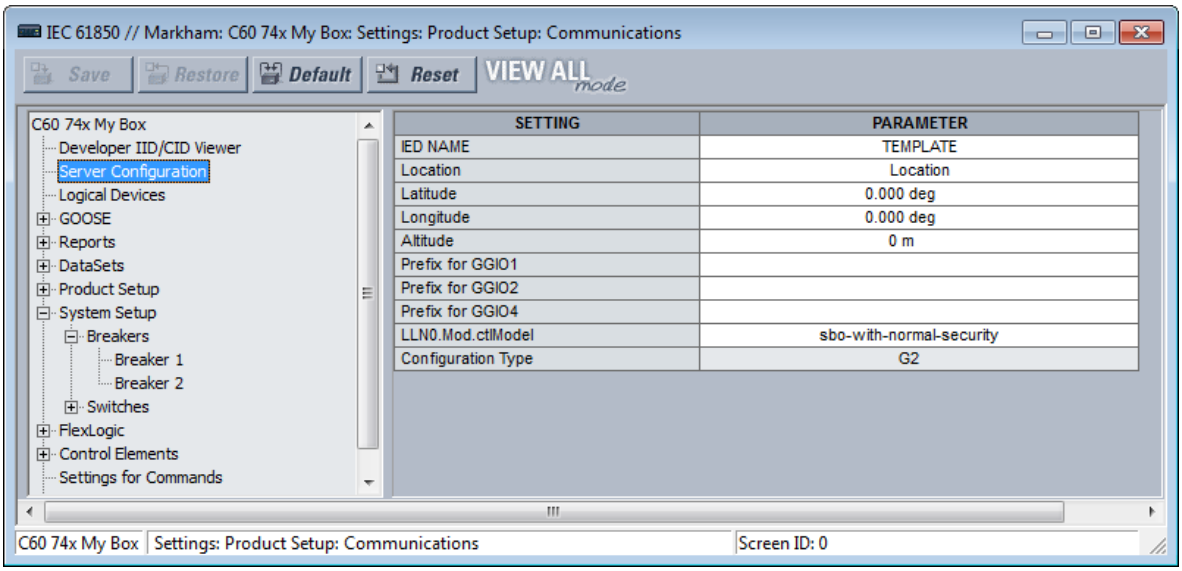

Opening the IEC 61850 window while online causes the UR Setup software to retrieve and import an SCL file from the B30. This System Configuration Description (SCD) file contains all the settings in the UR at the time of the file request, both those that are mapped into the IEC 61850 information model (that is, the "public" sections) and those that are not in the model (that is, the "private" section). The UR EnerVista Setup software imports all of these settings into the current session, not just those in the IEC 61850 window. To avoid loss of any unsaved setting changes made in other panels during the current session, all other panels for the B30 must be closed before the IEC 61850 panel can be opened, and the software prompts for this when applicable. Panels for other devices can be open concurrently to facilitate parameter coordination.

When CyberSentry security is enabled, editable settings depend on the user role logged in. For example, an Administrator and Engineer can change settings. If prompted for a "Settings password," it means the Administrator or Engineer password.

The **Restore** button restores settings in the window to their last saved values. The **Default** button reverts settings in the window to factory default values or Oscillography, Data Logger, or FlexLogic Equation Editor pre-configured values. The **Reset** button reverts all IEC 61850 settings to the factory default values, not just the current window. (In other settings windows, the button reverts settings in the window to factory default values.)

When a setting is enabled, its panel continues to read Disabled until relaunched. There is no polling capability to update automatically the IEC 61860 readings, so the panel needs to be closed then opened for the correct status to display. Good practice is to close any panel not in use because changes being made by other users too are reflected only upon relaunch of the panel.

Some of the IEC 61850 settings use floating point data, which guarantees accurate representation of real numbers up to seven digits. Numbers with more than seven digits are approximated within a certain precision. This can result in differences between what is entered and what is saved, and for example results in differences shown on a settings comparison report.

Create CID and settings files

When the **Save** button is clicked in the online IEC 61850 window, UR Setup software prepares a configured IED description (CID) file containing all the settings of the UR and sends the CID file to the B30. Upon receipt, the B30 checks the CID file for correctness, going out of service, then back into service when the CID file is accepted. The software displays a message when the B30 is running the new settings, confirming successful transfer. This process can take a minute or so due to the amount of processing required by the software and the B30.

Certain settings not related to IEC 61850 are indicated in this instruction manual as taking effect only when the device is restarted, for example using the **Maintenance > Reboot Relay Command** in the software.

When the **Save** button is clicked in the offline IEC 61850 window, UR Setup software saves to local storage, for example the hard drive, a .urs file containing all settings of the UR.

View IID/CID files

The file types are described as follows:

- IID — Instantiated IED capability description file — Actual settings on UR
- CID — Configured IED description file — Settings sent to the UR (may or may not contain the present settings)

IID and CID files are viewable. For example, after modifying settings in the IEC 61850 panels and clicking **Developer IID/ CID Viewer** in the software, a CID file generates and an SCL Viewer shows the updated CID file content. There are no edit or save functions; use instead the Back Up and Restore Settings instructions later in this document to save the files.

Searches are case insensitive.

Figure 5-12: View CID settings file

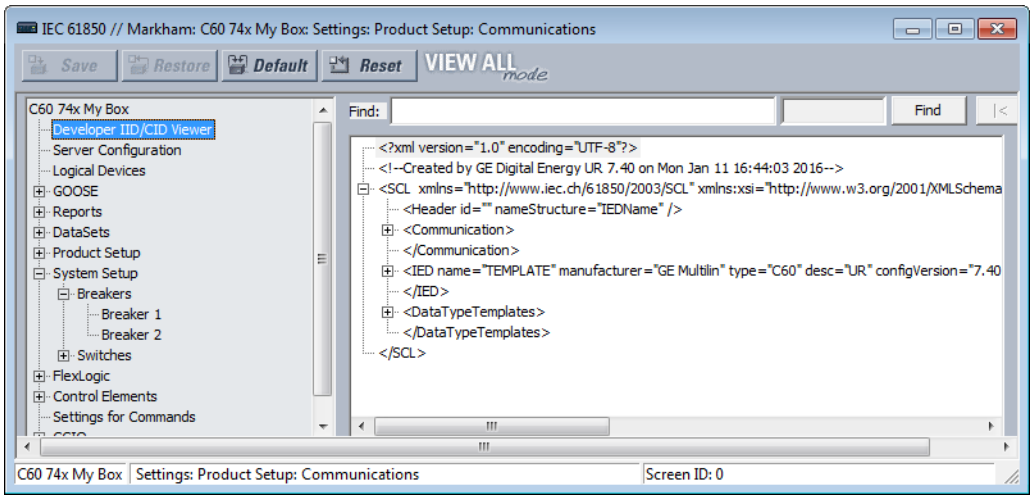

Server configuration

The Server Configuration panel contains IEC 61850 settings relevant to the server functions of the IED implementation.

The path is **Settings > Product Setup > Communications > IEC 61850 > Server Configuration**.

The following settings are available, where <iedName> is a syntactic variable representing the present value of the IED NAME setting.

5

IED NAME

Range: 1 to 58 VisibleString characters
Default: TEMPLATE

The value entered sets the IED name used by IEC 61850 for the B30. An IED name unique within the network must be entered for proper operation. Valid characters are upper and lowercase letters, digits, and the underscore (_) character. The first character must be a letter.

The **IED NAME** and the **Product LD inst name** comprise the <LDName> for a product. The longest LD inst are "Master" and "System" at six characters, with Master being fixed and the others configurable with the configurable Logical device feature. So the IED NAME needs to be restricted to 58 characters to meet a 64 character limit.

Location

Range: 0 to 255 ASCII characters
Default: Location

The value entered sets the value of the data attribute <LDName>/LPHD1.PhyNam.location. This data attribute is provided by the protocol to allow the user to declare where the equipment is installed.

Latitude

Range: -90.000 to 90.000 degrees in steps of 0.001 degree
Default: 0.000 deg

The value entered sets the value of the data attribute <LDName>/LPHD1.PhyNam.latitude. This data attribute is provided by the protocol to declare the geographical position of the device in WGS84 coordinates -latitude. Negative values indicate a southern latitude. WGS refers to the world geodetic system, which is used in global positioning systems (GPS), and 84 is the current version of the standard.

Longitude

Range: -180.000 to 180.000 degrees in steps of 0.001 degree
Default: 0.000 deg

The value entered sets the value of the data attribute <LDName>/LPHD1.PhyNam.longitude. This data attribute is provided by the protocol to declare the geographical position of the device in WGS84 coordinates -longitude. Negative values indicate a western longitude.

Altitude

Range: 0 to 10,0000 m in steps of 1 m

Default: 0 m

The value entered sets the value of the data attribute <LDName>/LPHD1.PhyNam.altitude. This data attribute is provided by the protocol to declare the geographical position of the device in WGS84 coordinates - altitude.

Prefix for GGIO1

Range: 0 to 11 VisibleString characters

Default:

This setting sets the LN Prefix of the FlexLogic operand interface logical node GGIO1 that is described in the GGIO1 section later. Valid characters are upper and lowercase letters, digits, and the underscore (_) character. The first character must be a letter. UR Setup software does not allow entry of a prefix that duplicates any other GGIO1 prefix that is used by the product, such as ConIn and ConOut.

Prefix for GGIO2

Range: 0 to 11 VisibleString characters

Default:

This setting sets the LN Prefix of the Virtual Inputs Interface logical node GGIO2 that is described in the GGIO2 section later. Valid characters are upper and lowercase letters, digits, and the underscore (_) character. The first character must be a letter. UR Setup software does not allow entry of a prefix that duplicates any other GGIO2 prefix that is used by the product.

Prefix for GGIO4

Range: 0 to 11 VisibleString characters

Default:

This setting sets the LN Prefix of the FlexAnalog operand interface logical node GGIO4 that is described in the GGIO4 section later. Valid characters are upper and lowercase letters, digits, and the underscore (_) character. The first character must be a letter. UR Setup software does not allow entry of a prefix that duplicates any other GGIO4 prefix that is used by the product.

LLN0.Mod.ctlModel

Range: status-only, direct-with-normal-security, sbo-with-normal-security

Default: sbo-with-normal-security

This setting specifies the control service that clients must use to control the TEST MODE FUNCTION of the B30. An "on" control to <LDName>/LLN0.Mod changes TEST MODE FUNCTION to Disabled, an "on-blocked" control changes it to Forcible, and a "test/blocked" changes it to Isolated.

Configuration Type

Range: G2, E3-2.0

Default: G2

This setting is read only. It specifies the method used to describe GOOSE subscription configuration in SCL. See the UR Family Communications Guide for details. In the G2 mode, the CID file contains IED elements for IEDs subscribed to by this IED containing GOOSE subscription information. In the E3 2.0 mode, the CID file has only one IED element and GOOSE subscription information is coded in data objects in the standard LGOS logical node used to monitor reception of the subscribed GOOSE. UR 7.30 or later accepts either mode. The set value is for the entire EnerVista installation and is preserved between sessions. To change this global field, click **File > Preferences** and access the IEC 61850 panel; you do not need to be connected to the device.

Logical devices

The Logical Devices panel contains IEC 61850 settings relevant to the configurable logical devices feature, wherein logical device naming can be reconfigured and logical nodes re-assigned.

The path is **Settings > Product Setup > Communications > IEC 61850 > Logical Devices**.

Figure 5-13: Default IEC 61850 Logical Devices panel with devices middle and nodes right

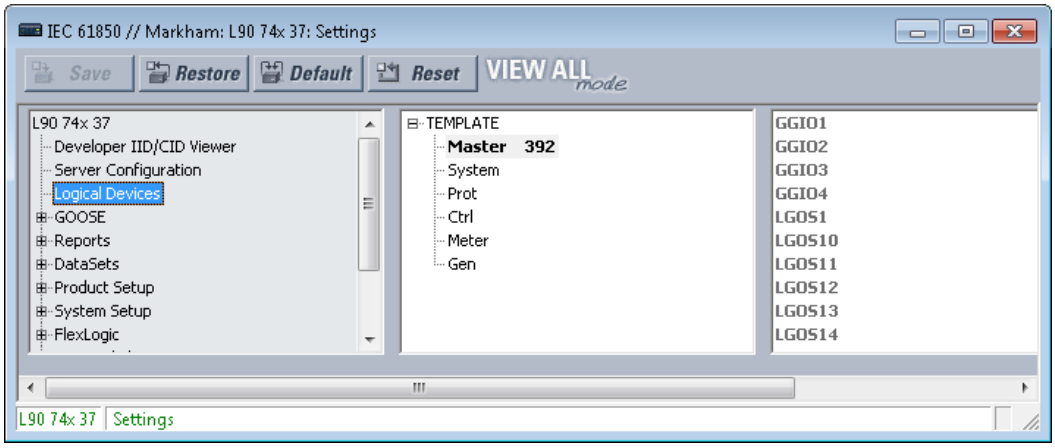

To configure logical devices and nodes:

1. Right-click an entry and edit an existing device, add a new one, or move a logical node. The rest of this section explains the window and how to perform these actions.

The default logical device categories are as follows:

- **Master** — Communications, including GOOSE, reports, Remote I/O, Virtual Inputs, Modbus, DNP, and setting group control
- **System** — Power system devices: breakers, switches, CTs, VTs, and so on, including interfaces to these, such as AC inputs, contact I/O, transducer I/O, HardFiber I/O
- **Prot** — Protection and protection-related functions
- **Ctrl** — Control and monitoring functions
- **Meter** — Metering and measurement functions
- **Gen** — FlexLogic, Virtual Outputs, non-volatile latches, FlexElements, recording (for example oscillography), security, front panel, clock

For the Master logical device, the following logical nodes have fixed assignment:

- The LLN0 in the Master logical device, which includes setting group, GOOSE and report control blocks, and datasets
- LPHD1 — Models common issues for physical devices
- GGIO1 — For unmapped FlexLogic operands
- GGIO2 — For Virtual Input control
- GGIO3 — For RxGOOSE Inputs
- GGIO4 — For unmapped FlexAnalog operands
- LGOS logical nodes — For GOOSE subscription

The Logical Devices panel has middle and right panes. The middle pane has a list of the instantiated logical devices in the sequence that they appear in SCL, with one device selected. The right pane has a list of the logical nodes presently assigned to the selected logical device in lexicographic order by logical node name.

In the middle pane logical devices are shown with their product-related name, followed in brackets by their function-related ldName, and followed by the value of their confRev. In the following example, by right-clicking and editing, the Protection logical device has been set to instance name "Prot", the function-related name "Feeder1Prot" and the configuration revision "2016-03-07 08:46." The text is clipped on the right if the line is longer than the available width. The next paragraphs explain how to do this setup.

Figure 5-14: Protection logical node selected

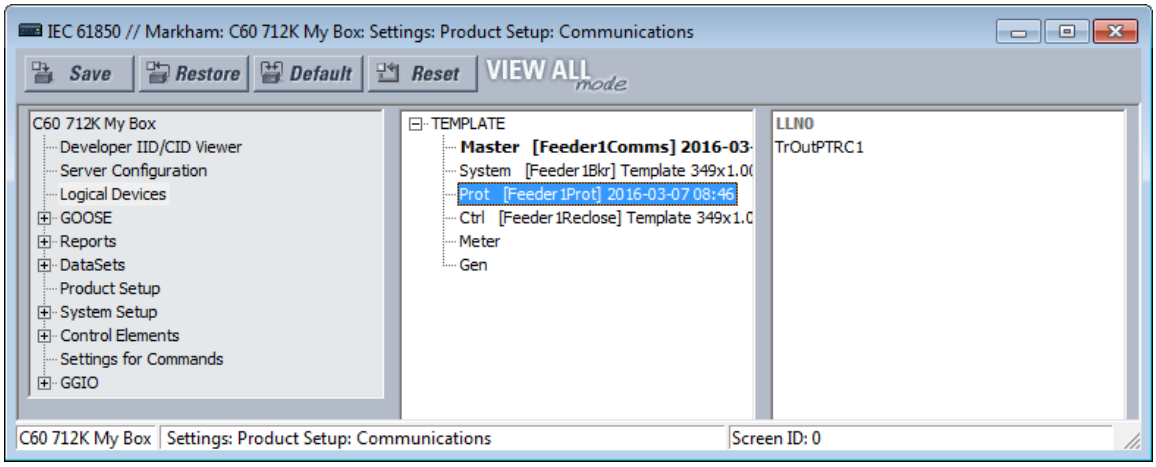

Right-clicking a logical device displays the menu that allows insertion of a new logical device immediately below the selected one, deletion of the selected logical device, or editing the selected logical device's parameters. The insert option is disabled and grayed-out if there are already 16 logical devices instantiated. The delete option is disabled and grayed-out if the selected logical device is Master or it contains any logical nodes other than LLN0.

Figure 5-15: Menu for logical node

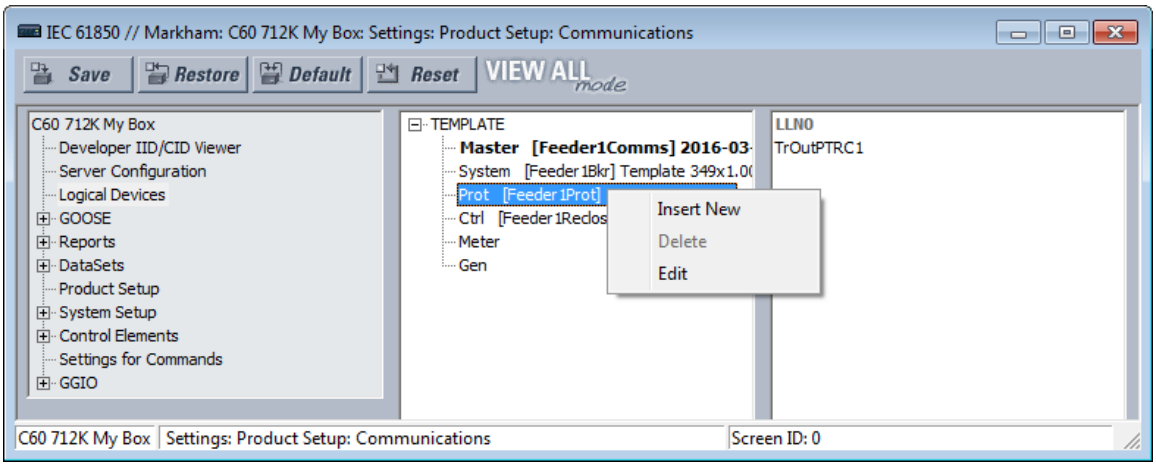

If the insert option is selected, or the edit option is selected for other than the Master logical device, a logical device parameters edit dialog opens.

Figure 5-16: Insert new logical node

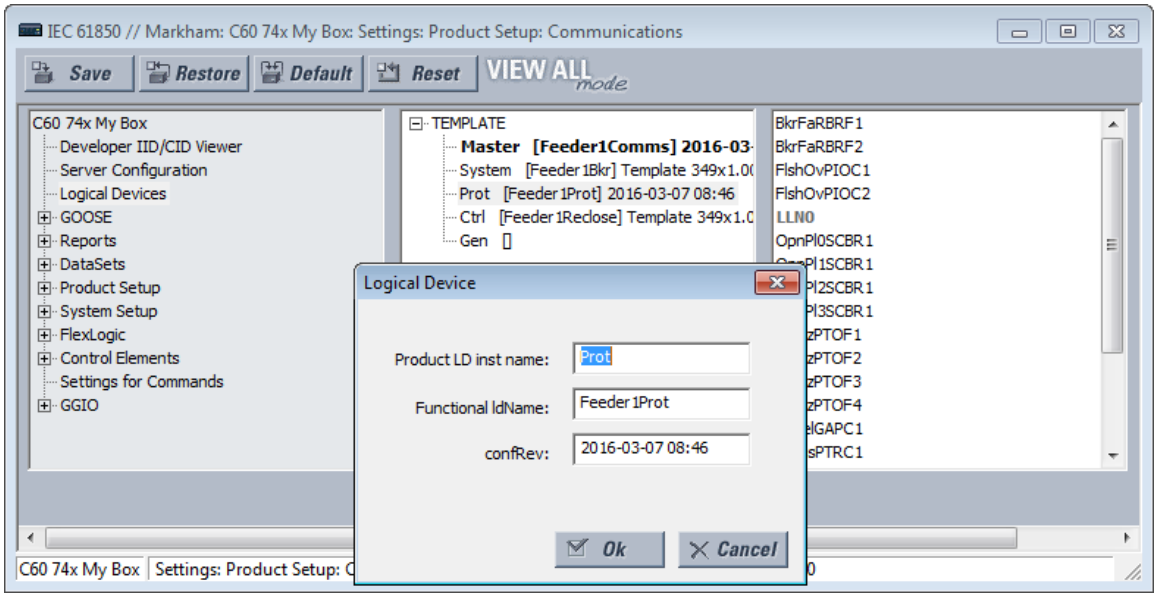

If the edit option is selected for the Master logical device, the **Product LD inst name** setting is not editable.

Figure 5-17: Edit logical node

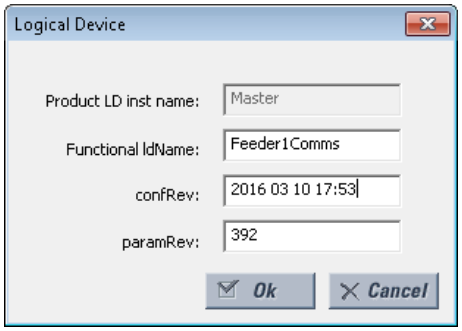

When the **Ok** button is clicked, the entered values for **Product LD inst name** and **Functional ldName** are checked for uniqueness within the UR, and they are updated in the pane.

The settings are explained as follows, where <iedName> is a syntactic variable representing the present value of the IED NAME setting. When adding or editing a logical device entry, these are the fields that need to be completed.

NOTE

Customized logical nodes are not saved in the URS file.

Product LD inst name

Range: 1 to 64 VisibleString characters

Default: as per the following table

Each logical device has this setting. The value is fixed at "Master" in the first logical device and configurable in all others. Valid characters are upper and lowercase letters, digits, and the underscore (_) character. The entered value sets the logical device inst name. Each logical device inst name is required to be unique within the device, and it cannot be blank. Also, if the corresponding functional ldName setting is blank, the concatenation of the IED name and the logical device

inst name must form an LDName that is unique within the network for proper operation. It is recommended that the length of the IED NAME plus the length of this setting be not greater than 64 to respect the requirements of IEC 61850 7 2:2010 22.2 for LDName.

The factory default configuration is for six logical devices with Product LD inst name settings and logical node assignments as per the following table.

Table 5-10: Factory default logical nodes

Default logical device inst name	Contains logical nodes modeling...
Master (root logical device; name is fixed)	communications, including GOOSE, reports, Remote I/O, Virtual Inputs, Modbus, DNP, and so on. Setting group control. This is the root logical device. To comply with IEC 61850 7 1 Ed2 clause 6.4.5.1, all group L logical nodes (logical nodes with class names begin with "L"), except LLN0, belonging to this IED are in this logical device.
Protection (Prot)	protection functions
Control (Ctrl)	control and monitoring functions
System	power system devices: breakers, switches, CTs, VTs, and so on, including interface to these such as AC inputs, contact I/O, transducer I/O, HardFiber I/O
Metering (Meter)	metering and measurement, including Signal Sources
General (Gen)	FlexLogic, virtual outputs, non-volatile latches, FlexElements, FlexMath, recording (for example oscillography), security, front panel, clock

Functional ldName

Range: 0 to 64 VisibleString characters

Default: empty string

Each logical device has this setting. The value is configurable in all logical devices. Valid characters are upper and lowercase letters, digits, and the underscore (_) character. If the number of characters entered is greater than zero, the setting sets the value of the function-related name used in communications. If an ldName is entered, it must form an LDName that is unique within the network for proper operation. The standard recommends choosing this name according to IEC 81346-1. If the number of characters entered is zero, no function-related name is defined.

NOTE

Throughout the remainder of this IEC 61850 section, <LDName> is a syntactic variable representing the present LDName of the master logical device. In other contexts LDName can refer to some other logical device. Depending on its context, <LDName> can be a product-related name or a function-related name.

configRev

Range: 0 to 255 ASCII characters

Default:

This data attribute is provided by the protocol to declare changes to the semantic of the data model of the UR. The intent is that the user changes Master configRev each time that the semantic or data model changes, so that clients can readily detect the change. A semantic change is a logical node getting a new semantic use; for example, an instance of logical node CSWI is now serving a different physical switch, or an instance of a logical node PDIS is now used for another zone. A data model change is a change in the presence of logical nodes, data objects, data attributes, or instance names.

The scope of Maser configRev is the entire relay configuration, as the Master logical device is the root logical device. Similar settings are provided for the other logical nodes; the scope of these other configRev settings is limited to the corresponding logical device configuration.

paramRev

Range: -2,147,483,648 to 2,147,483,647

Default: 0

The configurable data attribute paramRev has a scope that includes the entire device, and thus is modified whenever any setting in the device changes. The UR increments the value of paramRev by one whenever one or multiple setting changes occurs in one Modbus write request by any means (front panel, Modbus, or MMS) other than by SCL file

download. Incrementing occurs whether or not the setting is represented in the information model. When a UR device or EnerVista UR Setup accepts an SCL file, paramRev is set to the value in that SCL file. When EnerVista UR Setup changes one or more settings, and prepares an SCL file, it increments paramRev to the next higher multiple of 10 000.

NOTE

Each logical device has a name: LDName. (Note the upper case LD.) LDName has both a product-related form and a function-related form as per IEC 61850 6:2009 8.5.3.

SCL files invariably use the product-related form of LDName. The product-related form is the concatenation of the IED name of the device and the individual logical device's inst name. The IED name is the value of the "IED NAME" setting on the Server Configuration panel, and the logical device inst names are each the value of the corresponding "Product LD inst name" setting here. The "Product LD inst name" of the first logical device is fixed at "Master".

Communications use the function-related form of LDName if a function-related name is defined, otherwise communications use the product-related name. The function-related name is the value of the corresponding "Functional ldName" setting if this setting is not empty, if empty the function-related name is not defined.

In SCL, the function-related name is specified by the LDevice element attribute ldName (note the lower case ld). Absence of this attribute indicates the function-related name is not defined. In SCL the product-related name is specified by the name attribute of the IED element and the inst attribute of the LDevice element.

In the right pane, logical nodes assigned permanently to the Master logical device and LLN0 in all logical devices are greyed-out as shown earlier. These are not movable. Any other logical node can be dragged to any of the logical devices in the middle pane, which causes that logical device to be re-assigned to that logical device. Right-clicking a logical node device displays a menu that lists the logical devices that this logical node can be moved to. Clicking one of these re-assigns the logical node. Other common keyboard and/or mouse action can be used to select one or more logical nodes and move the selected nodes together.

5

Figure 5-18: Move logical node

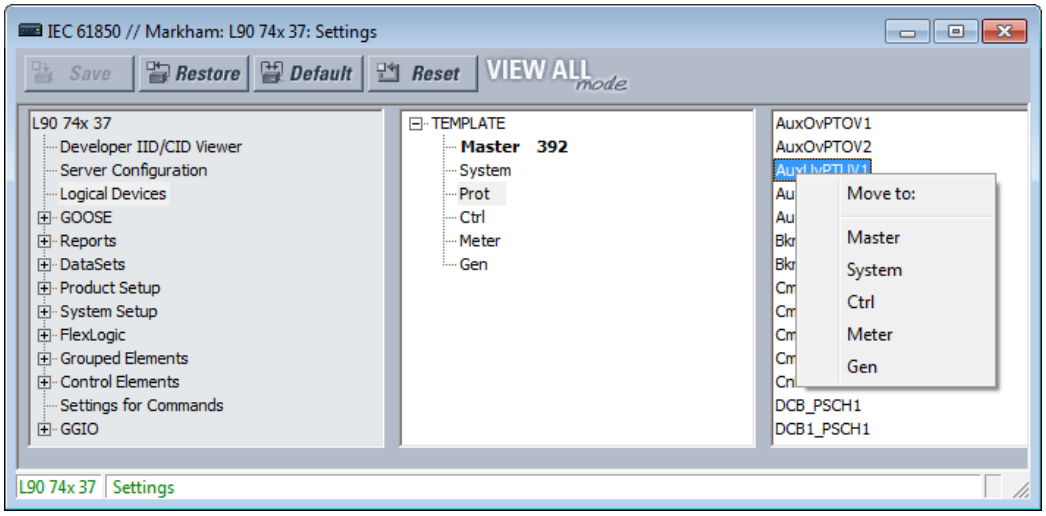

GOOSE

The path is **Settings > Product Setup > Communications > IEC 61850 > GOOSE**.

Support for Routable GOOSE

Routable GOOSE (R-GOOSE) is supported in firmware release 7.4 and later. Routable GOOSE allows UR and other devices to be located in separate networks. Encryption/decryption of messages is performed by a separate gateway device. Messages are routed using a separate router, using IP addresses.

Note the following behavior:

- A v7.4 device can send an R-GOOSE message to another v7.4 device when both have R-GOOSE active as the protocol
- A v7.4 device can send a GOOSE message to another v7.4 device when both have GOOSE active as the protocol
- A v7.4 device cannot send an R-GOOSE message to non-R-GOOSE devices, such as v7.3 or v5.9 UR device
- UR devices with firmware below v7.3 can send a GOOSE message to a v7.4 device that has GOOSE as the active protocol

NOTE

R-GOOSE is available through the IEC 61850 software option. If R-GOOSE security is required, the CyberSentry software option also must be purchased.

TxGOOSE

IEC 61850 GOOSE is an efficient method for simultaneous high-speed delivery of generic substation event information by a publishing device to more than one subscribing device. A TxGOOSE is a UR element implementing a single IEC 61850 GOOSE message publishing service. The subscribing function in URs is performed by RxGOOSE elements, as described in the next section. Each UR with IEC 61850 order code options has 16 TxGOOSE elements. Each TxGOOSE can either use the original format specified in IEC 61850 8 1:2011 or the routable GOOSE (R-GOOSE) format specified in IEC TR 61850-90-5:2012. Each TxGOOSE element can publish the values of up to 64 attributes of the IEC 61850 nodes in the UR.

Published TxGOOSE messages configured in the EnerVista UR Setup software can be subscribed by and the published operand values understood by other UR devices. Furthermore, they can be subscribed to and understood by any device of any manufacturer that implements the IEC 61850 edition 1.0 or 2.0 GOOSE subscription mechanism. The messages are published with a multicast address so that the network sends the messages to all devices; any number of devices that want to subscribe can.

For wide area protection, control, and monitoring schemes, R-GOOSE wraps the proven original format GOOSE in IP/UDP to multicast (or unicast) the data over a Wide Area Network (WAN). Sample applications are Wide area Remedial Action Scheme (RAS) and Under Voltage/ Frequency Load Shedding Schemes (UVLS/UFLS). R GOOSE uses IGMPv3 (Internet Group Management Protocol version-3, RFC 3376) for multicasting.

The entities whose values are published in GOOSE messages are known as members. The members are itemized in an ordered list known as a data set. Each TxGOOSE can use any one of the configured data sets. (See the DataSets section later for details.) The performance of a TxGOOSE is determined by its dataset. Booleans in fast GOOSE datasets are designed for the TT6 transfer time class (3 ms), while Booleans in the Normal datasets are designed for the TT3 class (100 ms). Due to the significant amount of CPU time required to compose a TT6 TxGOOSE message and the limited amount of time allowed by the TT6 class, at most four of these can be configured in a given UR. So only four fast GOOSE are allowed to be configured, and the UR software has a check to disallow the use of more than four fast datasets in GOOSE. If six fast datasets are configured outside of UR software and the file sent directly to the relay, the relay rejects the file. The design does allow six fast datasets to be used in report control blocks, which allows fast scanned data in reports.

Each enabled TxGOOSE transmits its message whenever a value change is detected in one or more of its members. If the changed value is a Boolean in a fast dataset, then the change detect occurs in the TT6 detection time of 3 ms or less. If the member is an analog value in a fast dataset, the change detect occurs in theTT3 time of 100 ms. In Normal GOOSE Datasets, change detection for all dataset members occurs in the TT3 time of 100 ms. To guard against the possibility that such a message is lost in the network before it reaches all subscribers, the message is quickly retransmitted several times. To allow subscribers to verify that their link to the publisher and the publisher itself are healthy, each message is also retransmitted periodically even while the values are unchanging. These latter messages are known as heartbeat messages, while the former are known as event messages. Heartbeat messages also provide means for a subscriber newly online to receive the published values in the absence of an event.

The details of TxGOOSE message construction are contained in the UR Family Communications Guide. Knowledge of these details is not required to configure GOOSE.

The UR does not implement the Fixed-Length encoded GOOSE messages option specified in IEC 61850-8-1:2011 clause A.3; the UR always uses the ASN.1 Basic encoding rules (as specified in ISO/IEC 8825-1) as specified in IEC 61850 edition 1.0 and as optional in IEC 61850 edition 2.0.

Navigate to **Settings > Product Setup > Communications > IEC 61850 > GOOSE > TxGOOSE > TxGOOSE1** to access the settings for the first TxGOOSE. The settings and functionality for the others are similar.

Figure 5-19: IEC 61850 TxGOOSE panel

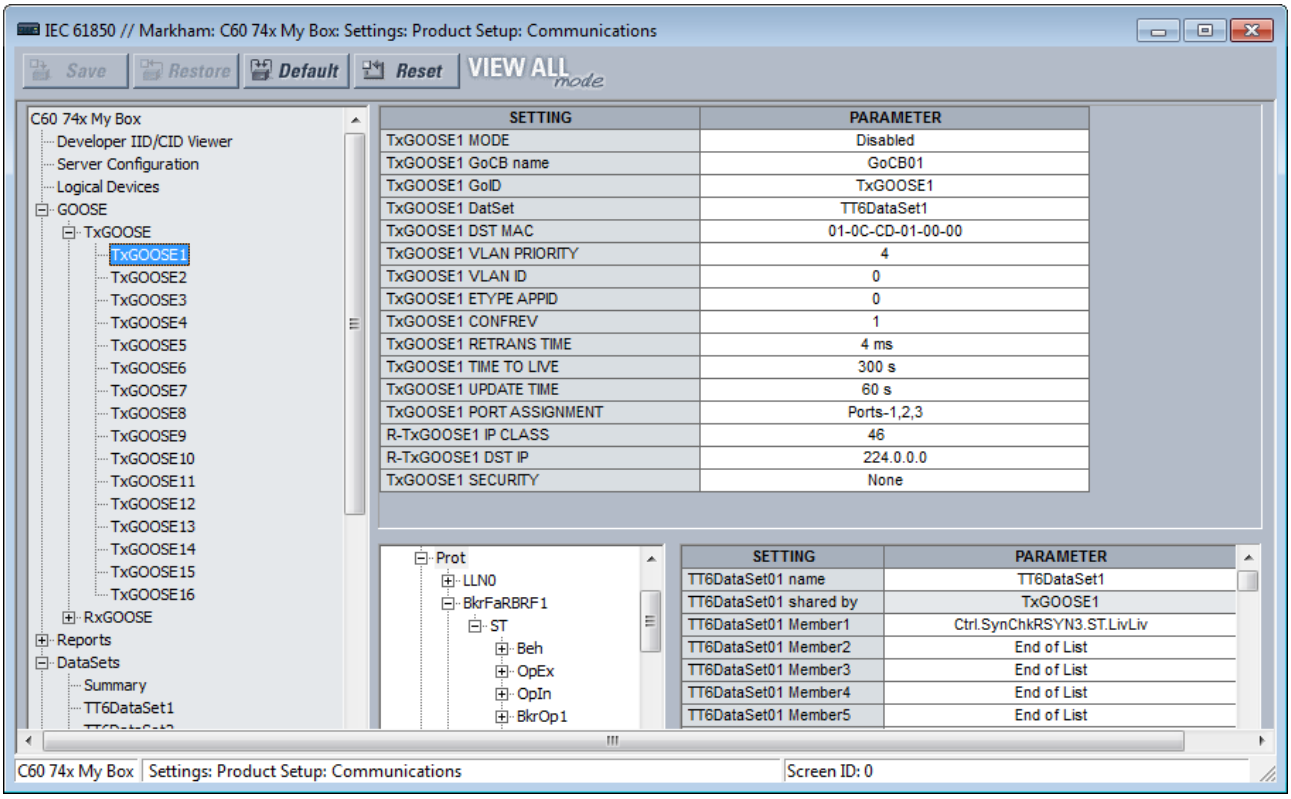

A data set needs to be set up and selected in the **TxGOOSEx DatSet** field for all content to display.

When saving changes, when a "dataset member is empty" message displays, you need to set the member in the bottom right of the window.

TxGOOSE1 MODE

Range: Disabled, GOOSE, R-GOOSE

Default: Disabled

When set to Disabled, TxGOOSE1 messages are not published. When set to GOOSE, TxGOOSE1 messages are published in IEC 61850 8 1:2011 GOOSE format. When set to R-GOOSE, TxGOOSE1 messages are published in Routable GOOSE format according to IEC 61850 90-5, and the **TxGOOSE1 DST MAC** address is set to 00 00 00 00 00 00 and cannot be changed.

TxGOOSE1 GoCB name

Range: 0 up to 32 VisibleString characters

Default: GoCB01

The entered value sets the GOOSE control block (GoCB) name value for TxGOOSE1.

An ObjectReference to the control block, which consists of the concatenation of the string "<LDName>/LLN0." and the control block name, is published in the gocbRef field of TxGOOSE1 messages and is used by subscribers to discriminate TxGOOSE1 messages from other GOOSE messages. <LDName> is a syntactic variable that is set to the value of setting Master functional ldName if one or more characters have been entered to that setting, otherwise the value of setting IED NAME suffixed with "Master".

TxGOOSE1 GoID

Range: 0 to 129 VisibleString characters

Default: TxGOOSE1

The entered value sets the goID value published in TxGOOSE1 messages, and can be used by subscribers to discriminate the TxGOOSE1 messages from other GOOSE messages.

TxGOOSE1 DatSet

Range: None, TT6DataSet1,TT6 DataSet2, ... TT3DataSet01,TT3 DataSet02, ...

Default: None

This setting selects the published data set using the UR Setup software designator for the data set. If None is selected, no TxGOOSE1 messages are sent.

The IEC 61850 name of the data sets are configured in the Datasets panel, as described later.

Some datasets are designed for the TT6 transfer time class (3 ms), while others are designed for the TT3 class (100 ms). The performance of a TxGOOSE is determined by its dataset. Use TT6 datasets for trips and blocking applications, TT3 datasets for slow automatic interactions. The 61850 name of the datasets are configured in the Datasets panel.

An ObjectReference to the data set, which consists of the concatenation of the string "<LDName>/LLN0." and the data set name, is published in the datSet field of TxGOOSE1 messages and can be used by subscribers to discriminate TxGOOSE1 messages from other GOOSE messages. <LDName> is a syntactic variable that is set to the value of setting Master functional ldName if one or more characters have been entered to that setting, otherwise the value of setting IED NAME suffixed with "Master".

To configure a DataSet, select it at the top of the window from the drop-down list. In the lower part of the window, drag and drop configuration items to the right side. Dataset members configured here affect other Report or TxGOOSE control blocks that use the same DataSet.

The performance of the TxGOOSE is determined by the performance of the selected dataset. When the selection is TT3DataSet01, TT3DataSet02, ... it is possible that transient events can be missed.

TxGOOSE1 DST MAC

Range: any 12 digit hexadecimal number

Default: 01-0C-CD-01-00-00

When the **TxGOOSE1 MODE** setting is R-GOOSE, the **TxGOOSE1 DST MAC** address is set to 00 00 00 00 00 00 and cannot be changed. Otherwise, the value entered here sets the Ethernet destination Media Access Control (MAC) address in published TxGOOSE1 messages. As the standard requires that the address have the multicast bit set TRUE, that is to say the second digit is set to an odd number, messages transmitted have the multicast bit set TRUE no matter its value in this setting.

The destination MAC address can be used by the network to restrict message delivery to selected devices that need to receive them, reducing network load. This address also can be used by hardware in receiving devices to filter out messages that are of no interest to them, reducing processor burden. Different filtering algorithms are implemented by different devices. The standard recommends that the algorithm used by hardware of the receiving device be considered when assigning destination multicast addresses.

Subscribers can use this address to discriminate TxGOOSE1 messages from other GOOSE messages.

TxGOOSE1 VLAN PRIORITY

Range: 0, 1, 2, 3, 4, 5, 6, 7, 5-4, 6-4, 6-5, 7-4, 7-5, 7-6

Default: 4

When the value entered is 0, 1, 2, 3, 4, 5, 6, or 7, the User Priority value in the IEEE 802.1Q VLAN tag included in published TxGOOSE1 messages is set to that value. When one of the two-digit values is entered, the dynamic priority feature is selected: the first event message has the User Priority value of the first digit, and User Priority is decremented in each following message until reaching the value of the second digit. For instance, if the selected value is 7-5, then the User Priority values in successive messages beginning with the message triggered by an event is 7, 6, 5, 5, 5, 5, 5, and so on. Do not make a dynamic priority selection when standard behavior is required.

Network devices can forward a message with a higher priority value before a message with a lower priority value, which speeds delivery of high-priority messages in heavily loaded networks. The standard recommends that higher-priority messages, such as GOOSE, have priority values in the range of 4 to 7.

TxGOOSE1 VLAN ID

Range: 0 to 4095 in steps of 1

Default: 0

The value entered sets the VID value in the IEEE 802.1Q VLAN tag included in published TxGOOSE1 messages. VID can be used by network devices to direct messages to only selected devices, reducing network burden. VID values of 0 and 1 are assigned by IEEE 802.1Q to other functions and are not to be used for GOOSE.

TxGOOSE1 ETYPE APPID

Range: 0 to 65535 in steps of 1

Default: 0

The value entered sets the APPID value in published GOOSE messages and can be used by subscribers to discriminate TxGOOSE1 messages from other GOOSE messages.

The standard reserves the value range 0 to 16383 for GOOSE Type 1 (Fast messages), and reserves the value range 32768 to 41151 for GOOSE Type 1A (Trip messages). Some subscribers can process messages in the Type 1A range faster than messages in the Type 1 range. The standard reserves the default value (0) to indicate lack of configuration. The standard strongly recommends unique, source-orientated APPIDs within a given system.

TxGOOSE1 CONFREV

Range: 0 to 4294967295 in steps of 1

Default: 1

The entered value sets the confRev value in published GOOSE messages and can be used by subscribers to discriminate TxGOOSE messages of the expected configuration revision from messages of a different revision. The standard requires that CONFREV be incremented each time the members or the order of the members published is changed. The standard states that the value of 0 is reserved.

TxGOOSE1 RETRANS TIME

Range: 0 to 100 ms in steps of 1 ms

Default: 4 ms

If the entered time is non-zero, when a member value change is detected, four event transmissions are sent, then heartbeat transmissions resume. The interval between the first and second event transmissions, and between the second and third, is the time set here. The interval between the third and the fourth event transmission is double the set time. If the entered time is zero, only a single event transmission occurs, then heartbeat transmissions resume.

TxGOOSE1 TIME TO LIVE

Range: 1 to 300 s in steps of 1 s

Default: 300 s

The value entered sets the timeAllowedtoLive value in published TxGOOSE1 messages. The standard requires subscribers to assume a failure has occurred when another TxGOOSE1 message is not received within the published timeAllowedtoLive time.

Base this setting on the **TxGOOSE UPDATE TIME** and the tolerable number of contiguous message delivery misses. For example, if the heartbeat time is 10 s, and missing up to three successive messages is tolerable, make the setting 10 * 3 + 1 = 31 s. The extra second is to ensure that arrival of the third heartbeat transmission beats the timeAllowedtoLive timer.

TxGOOSE1 UPDATE TIME

Range: 1 to 60 s in steps of 1 s

Default: 60 s

This setting specifies the time interval between heartbeat messages, meaning messages that are sent periodically while no events are detected.

TxGOOSE1 PORT ASSIGNMENT

Range: Disabled, Port-1; Port-2; Port-3; Ports-1,2; Ports-2,3; Ports-1,3; Ports-1,2,3

Default: Ports-1, 2, 3

This setting specifies the Ethernet ports for transmission of TxGOOSE1. When set to disabled, TxGOOSE1 messages are not transmitted on any port no matter the state of GoEna. When set to Port-1, TxGOOSE1 is published over Ethernet Port-1 only; while selecting Ports-1, 3 option, the same TxGOOSE1 is published to both Ports 1 and 3; and similarly if set to Ports-1, 2, 3, all ports publish TxGOOSE1.

NOTE

When setting **PRT2 REDUNDANCY** to Failover or to PRP, the TxGOOSE 1 port assignment needs to be set to ports 2 and 3 (Ports-2,3).

Also, Port 3 configuration in the CID file is ignored. The Port 3 ConnectedAP elements has no meaning, as ports 2 and 3 use the port 2 MAC address, IP address, and mask.

R-TxGOOSE1 IP CLASS

Range: 0 to 256 in steps of 1

Default: 46

When the **TxGOOSE1 MODE** setting is other than R-GOOSE, the value of this setting is not used. Otherwise this setting selects the IPv4 Differentiated Services Code Point-DSCP (formerly called TypeOfService-TOS) value. This value provides priority routing, when supported in the routers. The default value is for Expedited Forwarding (101110B, 46 or 2EH).

R-TxGOOSE1 DST IP

Range: 0.0.0.0 to 255.255.255 in steps of 1

Default: 224.0.0.0

When the **TxGOOSE1 MODE** setting is other than R-GOOSE, the value of this setting is not used. Otherwise this setting specifies destination IP address for the R-TXGOOSE1 that is entered in Standard IPV4 address format. The destination IP address needs to be a valid multicast or unicast IP address. The value specified in this setting is mapped to IPv4 header 32 bit field for Destination IP Address while publishing R-GOOSE1.

The default IP address 224.0.0.0 is reserved, and hence not a valid multicast IP address.

The source IP address is that of the UR port from which the R-GOOSE messages are transmitted.

R-TxGOOSE1 SECURITY

Range: None, Signature, SignatureAndEncryption

Default: None

This setting is not supported. The default is None. Do not change the default.

5

RxGOOSE

Navigate to **Settings > Product Setup > Communications > IEC 61850 > GOOSE > RxGOOSE > RxGOOSE Messages**.

IEC 61850, GOOSE is an efficient method for simultaneous high-speed delivery of the same generic substation event information by a publishing device to more than one subscribing device. An RxGOOSE is a UR element implementing a single IEC 61850 GOOSE message subscribing service. The publishing function in URs is performed by TxGOOSE elements, as described in the previous section.

Each UR with the IEC 61850 order code option has 64 RxGOOSE elements. Each RxGOOSE element can subscribe to GOOSE messages from a specified publisher. Each RxGOOSE can either use the original format specified in IEC 61850 8 1:2011 or the routable GOOSE (R-GOOSE) format specified in IEC TR 61850-90-5:2012. Subscribed message members can be DataObjects, SubDataObjects, DataAttributes or SubAttributes. In E2-2.0 mode members are restricted to basic types BOOLEAN, FLOAT32, INT32, Dbpos, TimeStamp or Quality. Each subscribed message can contain up to 64 values. A member can be a structure containing several values; note that it is the number of values rather than the number of members that are limited to 64.

GOOSE messages from any device of any manufacturer that implements the IEC 61850 edition 1.0 or 2.0 GOOSE publish service or the 61850-90-5 R GOOSE service can be subscribed to. The UR accepts both the variable length encoded GOOSE messages specified IEC 61850 8 1:2004 and the Fixed-Length encoded GOOSE messages as specified in IEC 61850 8 1:2011 clause A.3.

Each enabled RxGOOSE monitors for interruption of the GOOSE messages it subscribes to based on the value in the timeAllowedtoLive field of the last message received. If a new message is not received within that time interval, the RxGOOSE assumes that connectivity is lost. FlexLogic operands (for example RxGOOSE1 On, RxGOOSE1 Off) reflect the status of each RxGOOSE connectivity. An RxGOOSE connection is also considered lost after the UR finishes restart until a message is received. While any RxGOOSE connectivity is lost, a common RxGOOSE Fail self-test is activated.

Messages that contain the value true in the ndsCom field are never accepted. Messages that contain the value true in the simulation field (test field in edition 1.0 messages) are accepted only when the UR **Test Mode Function** setting is set to Forcible or Isolated.

RxGOOSE messages can be received through any UR Ethernet port.

Navigate to **Settings > Product Setup > Communications > IEC 61850 > GOOSE > RxGOOSE > RxGOOSE Messages > RxGOOSE1** to access the settings that specify the messages to be accepted by the first RxGOOSE element. The settings and functionality for the other RxGOOSE are similar. The following settings are available. They allow RxGOOSE1 to recognize the GOOSE messages it is to accept. Most of these settings are automatically configured by UR Setup software when an association to an RxGOOSE Boolean Input, RxGOOSE DPS Input, and/or RxGOOSE Analog Input is made as described in the sections following this. Only settings **R-RxGOOSE1 RECEPTION MODE**, **R-RxGOOSE1 SECURITY**, and **R-RxGOOSE SRC IP** need to be manually completed as the information is not contained in publisher SCL.

Figure 5-20: IEC 61850 RxGOOSE Messages panel

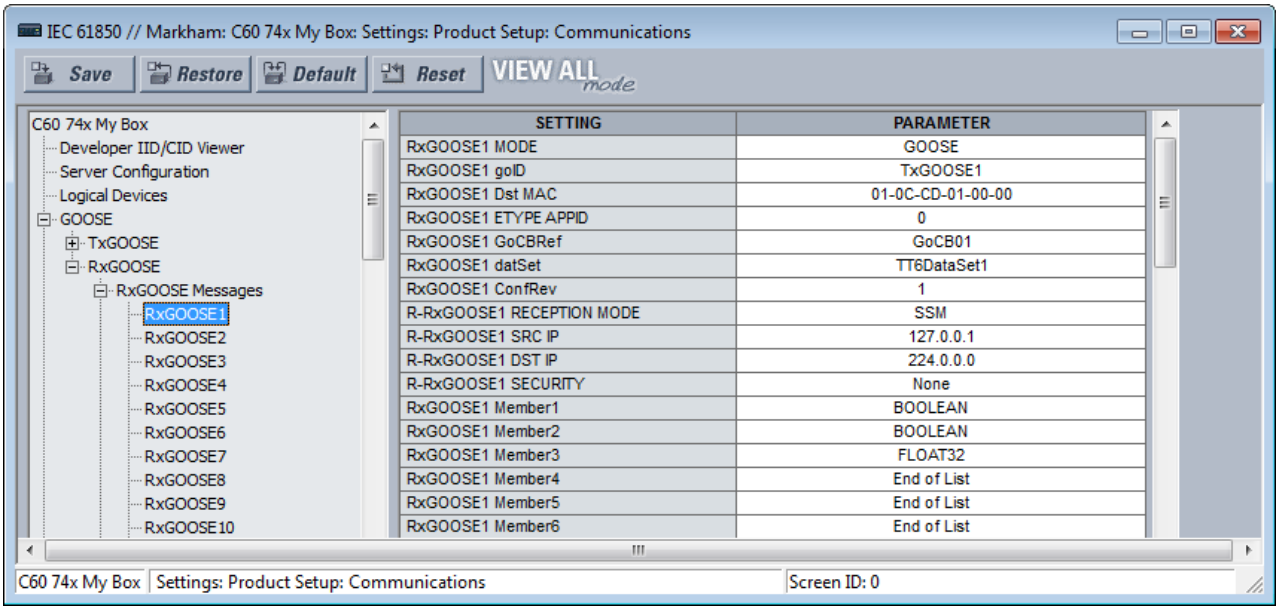

RxGOOSE1 MODE

Range: GOOSE, R-GOOSE

Default: GOOSE

When set to GOOSE, TxGOOSE1 messages are published in IEC 61850 8 1:2011 GOOSE format. When set to R-GOOSE, TxGOOSE1 messages are published in Routable GOOSE format according to IEC 61850 90-5. When set to R-GOOSE, the **R-RxGOOSE DST IP** needs to be a valid multicast or unicast IP address.

RxGOOSE1 goID

Range: 0 to 129 Visible String characters

Default: empty string

If the entered value has one or more characters, the goID field of incoming GOOSE messages must exactly match this value for the message to be accepted as a valid RxGOOSE1 message. If the entered value is the empty string, RxGOOSE1 does not check the value received in the goID field.

If the publisher is a UR 7.3x series device, this setting needs match the value of the publisher's **TxGOOSE GoID** setting.

RxGOOSE1 Dst MAC

Range: any 12 digit hexadecimal number

Default: 01-0C-CD-01-00-00

When the **RxGOOSE1 MODE** setting is R-GOOSE, the value of this setting is not used, the destination Media Access Control (MAC) address for RxGOOSE1 messages is calculated based on the **RxGOOSE DST IP** address. Otherwise, set this setting to the MAC address of the publisher. Only received GOOSE messages having a MAC address equal to this value are accepted as valid RxGOOSE1 messages. An entered address of zero disables RxGOOSE1.

If the publisher is a UR series 7.3x device, the setting needs to match the value of the publisher's **TxGOOSE DST MAC** setting.

RxGOOSE1 ETYPE APPID

Range: 0 to 65535 in steps of 1

Default: 0

If the value entered is non-zero, the APPID field of incoming GOOSE messages must exactly match this value for the message to be accepted as a valid RxGOOSE1 message. If the value entered is zero, RxGOOSE1 does not check the value received in the APPID field.

If the publisher is a UR series 7.3x device, the setting needs to match the value of the publisher's **TxGOOSE ETYPE APPID** setting.

RxGOOSE1 GoCBRef

Range: 0 to 129 alphanumeric, underscore, slash and period characters, beginning with an alpha character

Default: empty string

The gocbRef field of incoming GOOSE messages must match this value for the message to be accepted as a valid RxGOOSE1 message. If the entered value is the empty string, RxGOOSE1 is disabled. If not the empty string, the entry needs to be an ACSI ObjectReference to the publishing control block in the format:

<LDName>/LLN0.<GoCBName>

where <LDName> is the function-related name if the logical device containing the publishing control block has "ldName" configured, otherwise the product-related name of that logical device, and <GoCBName> is the name of the publishing control block.

The B30 translates the ACSI format required for this setting to the MMS format used in GOOSE messages:

<LDName>/LLN0GO<GoCBName>

If the publisher is a UR 7.3x or 7.40 series device, <LDName> is the value of the publisher's Master functional ldName setting if that setting is not empty, otherwise it is the value of the publisher's IED NAME suffixed with "Master". If the publisher is a UR 7.3x series device, <GoCBName> is "GoCB" suffixed with the two digit TxGOOSE instance number, for example "GoCB01". If the publisher is a UR 7.40 series device, <GoCBName> is as specified earlier in the TxGOOSE section of this chapter.

RxGOOSE1 datSet

Range: 0 to 32 alphanumeric and underscore characters, beginning with an alpha character

Default: empty string

If the entered value has one or more characters, the datSet field of incoming GOOSE messages must exactly match this value prefixed by <LDName>/LLN0$ for the message to be accepted as a valid RxGOOSE1 message. <LDName> is as specified in the RxGOOSE GoCBRef setting above. If the entered value is the empty string, RxGOOSE1 does not check the value received in the datSet field.

If the publisher is a UR 7.3x series device, set this setting to the value of the publisher's DataSetxx name setting, where xx is the instance number of the data set selected by the publisher's **TxGOOSE datSet** setting. If the publisher is a UR 7.40 series device, datSet is as specified in the DataSets section of this chapter.

RxGOOSE1 ConfRev

Range: 0 to 4294967295 in steps of 1

Default: 1

If the value entered is non-zero, the confRev field of incoming GOOSE messages must exactly match this value for the message to be accepted as a valid RxGOOSE1 message. If the entered value is zero, RxGOOSE1 does not check the value received in the confRev field.

If the publisher is a UR 7.3x series device, set this setting to match the value of the publisher's **TxGOOSE ConfRev** setting.

R-RxGOOSE1 RECEPTION MODE

Range: SSM, ASM, Unicast

Default: SSM

When the **RxGOOSE1 MODE** setting is other than R-GOOSE the value of this setting is not used. Otherwise it selects the R-GOOSE reception mode.

R-RxGOOSE RECEPTION MODE specifies the **R-RxGOOSE DST IP** range. When set to SSM, **R-RxGOOSE DST IP** must be in the range of 232.0.0.1 to 232.255.255.255. When set to ASM, **R-RxGOOSE DST IP** must be in the range of 224.0.0.1 to 239.255.255.255, excluding the SSM range. Note that the SSM range is inside the ASM range and therefore the ASM use excludes the SSM range. The default destination IP address 224.0.0.0 is reserved, and hence not a valid multicast IP address.

The reception modes are related to Layer-3 R-GOOSE reception from routers/WAN. The subscription to multicasting of R-GOOSE is supported using IGMP Protocol Independent Multicast (PIM). It is made available in either Source Specific Multicast (SSM) mode or Any Source Multicast (ASM) mode. Unicast (over UDP) mode can also be used. In case of multicasting (IGMPv3 based SSM or ASM), the R-GOOSE subscriber device requests the Last Hop Router (LHR) to subscribe to a specific multicasting group.

If the publisher is using a unicast destination IP address for this R-GOOSE, then set **R-RxGOOSE1 RECEPTION MODE** to Unicast. Otherwise set **R-RxGOOSE1 RECEPTION MODE** to the SSM or ASM mode used by the local routers/firewalls.

R-RxGOOSE1 SRC IP

Range: 0.0.0.0 to 255.255.255 in steps of 1

Default: 127.0.0.1

5

When the **RxGOOSE1 MODE** setting is other than R-GOOSE, the value of this setting is not used. When the **RxGOOSE1 MODE** setting is R-GOOSE and the **R-RxGOOSE RECEPTION MODE** setting is ASM, the value of this setting is not used. Otherwise the Source IP Address field of incoming R-GOOSE messages must exactly match this value for the message to be accepted as a valid RxGOOSE1 message. Set this setting to the value of the source IP address used by the publisher. For UR publishers, this value is in setting PRT# IP ADDRESS.

The UR does not validate the address entered. The default IP address 127.0.0.1 is a reserved, not a valid IP address. Enter a valid IP source address.

R-RxGOOSE1 DST IP

Range: 0.0.0.0 to 255.255.255 in steps of 1

Default: 224.0.0.0

When the **RxGOOSE1 MODE** setting is other than R-GOOSE, the value of this setting is not used. Otherwise the Destination IP Address field of incoming R GOOSE messages must exactly match this value for the message to be accepted as a valid RxGOOSE1 message. Set this setting to the same value as the R-GOOSE publisher's Destination IP Address. For UR publishers, this value is in setting R-TxGOOSE# DST IP.

The destination IP address needs to be a valid multicast or unicast IP address. The UR does not validate the address entered. The default IP address 224.0.0.0 is reserved, and hence not a valid multicast IP address.

R-RxGOOSE1 SECURITY

Range: None, Signature, SignatureAndEncryption

Default: None

This setting is not supported. The default is None. Do not change the setting.

RxGOOSE1 Member 1

Range: End of List, BOOLEAN, FLOAT32, INT32, Dbpos (DPS), Quality, TimeStamp, Struct

Default: End of List

This setting specifies the type that the first member of incoming GOOSE messages must be for the message to be accepted as a valid RxGOOSE1 message. There are similar settings for each of the up to 64 members that the UR is able to subscribe to in a given GOOSE message. The member before the first member setting set to "End of List" must be the last member of the message for the message to be accepted as a valid RxGOOSE1 message.

If the publisher is a UR 7.3x or 7.40 series device, set these settings to match the basic type of the members of the publisher's data set selected by the publisher's **TxGOOSE datSet** setting.

If the publisher dataset includes members with structured data, that is, data attributes, sub-data objects, and/or data attributes with sub-data attributes, configuration must use one of the new 7.40 UR Setup RxGOOSE Inputs pages. In this case the Member setting displays as the product-related name used by the publishing IED of the data object or data attribute, in standard SCSM format (e.g. Publisher1LD1/LLN0STOff$stVal).

Note that a dataset can hold at most 64 basic data attribute values, and that a single structured data object or attribute can contain multiple basic data attribute values. UR Setup software does not allow more that 64 basic data attribute values to be entered, in which case the last several members settings cannot be changed from End of List.

Note that the publisher's name alone does not contain all the information required for subscription, additional publisher information model information is stored elsewhere. For this reason, manual entry of the name is not supported.

RxGOOSE inputs

The values received by RxGOOSE elements need to be converted to FlexLogic or FlexAnalog operands so that they can be used by other UR elements. This conversion is done by RxGOOSE Boolean, RxGOOSE DPS, and RxGOOSE Analog elements. Each RxGOOSE Boolean can convert the value of a specified Boolean value received by a specified RxGOOSE to a FlexLogic operand. Each RxGOOSE DPS can convert the value of a specified Dbpos (Double bit position) value to four FlexLogic operands, one for each of the four possible Dbpos states. Each RxGOOSE Analog can convert the value of a specified FLOAT32 member to a FlexAnalog operand. Each of these operands reverts to its default state when the RxGOOSE connectivity is lost. Other types of values can be present in subscribed GOOSE messages, but cannot be converted to operands. An RxGOOSE Input that is mapped to a value that in the GOOSE message is a child of a data object reverts to its configured default value while the Quality value in that data object is invalid, and also while the Quality value is test and this relay's **TEST MODE FUNCTION** setting is other than Forcible or Isolated.

RxGOOSE Boolean, RxGOOSE DPS, and RxGOOSE Analog elements are mapped to various data objects in <iedName>Master/GGIO3. This is to allow reading of their values via MMS and to allow references to them in SCL files. GGIO3 has no settings, nor is it visible in the UR Setup software. See the UR Family Communications Guide for more information on GGIO3.

RxGOOSE Boolean inputs

Navigate to **Settings > Product Setup > Communications > IEC 61850 > GOOSE > RxGOOSE > RxGOOSE Boolean Inputs**.

The number of RxGOOSE Boolean (remote inputs) is 256.

There are **Add IED** and **Remove IED** buttons. The **Add IED** button allows SCL files to be used, including IID, ICD, CID, and SCD (supported in version 7.40 and later). When the file format is SCD, the system lists all IEDs inside the SCD file and lets the user select the ones to add. The figure shows a selection being made by importing a CID file using the **Add IED** function.

Figure 5-21: RxGOOSE Boolean panel

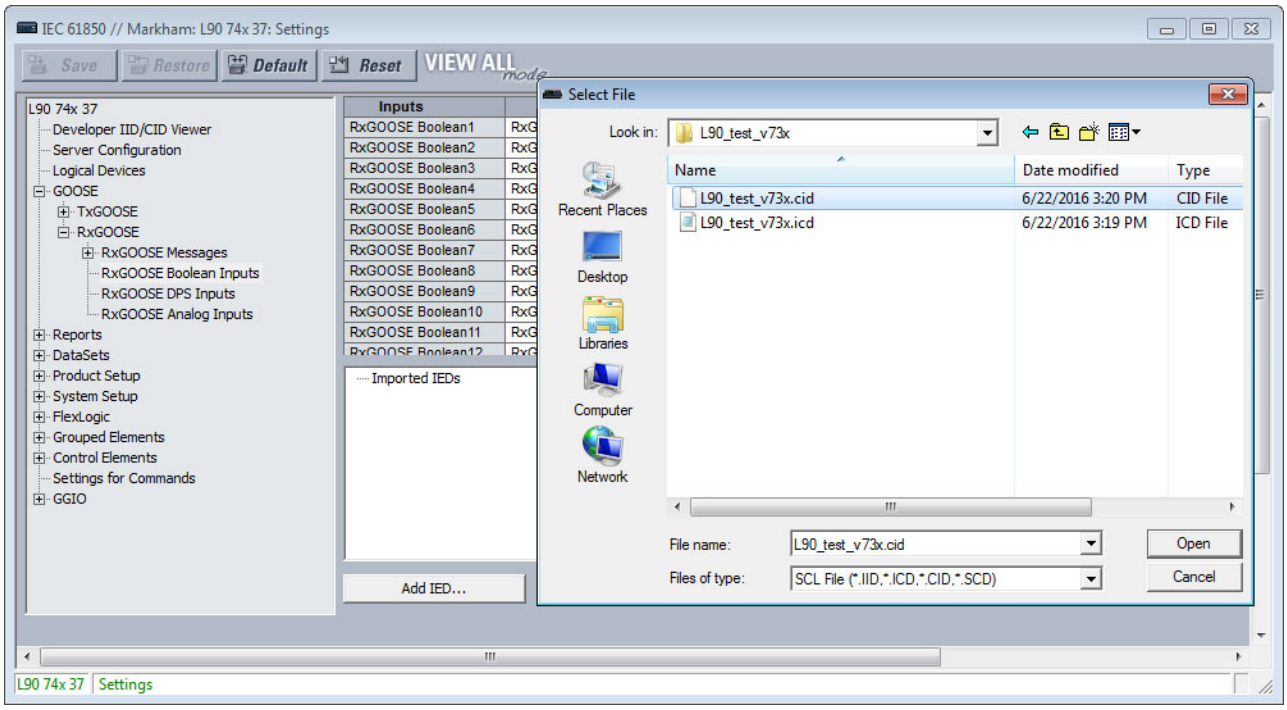

5

Most of the settings are configured by drag-and-drop. However the ID, DEFAULT STATE, and EVENTS settings must be individually entered when the factory default values are not acceptable.

RxGOOSE Boolean1 ID

Range: 0 to 20 characters

Default: RxG Bool1

This setting allows the user to assign descriptive text to the name of the RxGOOSE Boolean1 FlexLogic operand. The full operand name is the value of this setting appended with " On". The standard and enhanced front panels display the first 17 characters of this setting plus " On" to fit the 20 character display.

RxGOOSE Boolean1 RxGOOSE

Range: None, RxGOOSE1, RxGOOSE2, and so on

Default: None

This setting selects the RxGOOSE containing the value that drives the RxGOOSE Boolean1 FlexLogic operand. If set to None, the RxGOOSE Boolean1 FlexLogic operand assumes its default state.

RxGOOSE Boolean1 Member

Range: 1 to 64 in steps of 1

Default: 1

This setting selects the GOOSE message member that drives the RxGOOSE Boolean1 FlexLogic operand. A setting of 1 selects the first member, 2 selects the second member, and so on. Entering a number greater than the number of members in the message and entering the number of a member which does not contain a BOOLEAN results in the RxGOOSE Boolean1 FlexLogic operand assuming its default state. The Subscribed to column identifies the particular Boolean subscribed to even if the member is a structure containing more than one Boolean.

RxGOOSE Boolean1 DEFAULT STATE

Range: On, Off, Latest/On, Latest/Off

Default: Off

This setting selects the logic state for the RxGOOSE Boolean1 FlexLogic operand if the UR has just completed startup and the selected RxGOOSE has not yet received a message, or the selected RxGOOSE has lost its connectivity with the publisher. The following choices are available:

- "On" value defaults the input to logic 1
- "Off" value defaults the input to logic 0
- "Latest/On" freezes the input in case of lost connectivity. If the latest state is unknown, such as after UR power-up but before the first communication, the input defaults to logic 1. When communication resumes, the input becomes fully operational.
- "Latest/Off" freezes the input in case of lost connectivity. If the latest state is unknown, such as after UR power-up but before the first communication, the input defaults to logic 0. When communication resumes, the input becomes fully operational.

RxGOOSE Boolean1 EVENTS

Range: Disabled, Enabled

Default: Disabled

This setting selects whether Off to On transitions of the RxGOOSE Boolean1 FlexLogic operand are recorded by the event recorder. If set to Enabled, Off to On transitions are recorded. On to Off transitions are never recorded, even if events are enabled.

RxGOOSE DPS inputs

Navigate to **Settings > Product Setup > Communications > IEC 618560 > GOOSE > RxGOOSE > RxGOOSE DPS Inputs**.

There are **Add IED** and **Remove IED** buttons. The **Add IED** button allows SCL files to be used, including ICD, CID, and SCD (supported in version 7.40 and later). When the file format is SCD, the system lists all IEDs inside the SCD file and lets the user select the ones to add.

Figure 5-22: RxGOOSE DPS Inputs panel

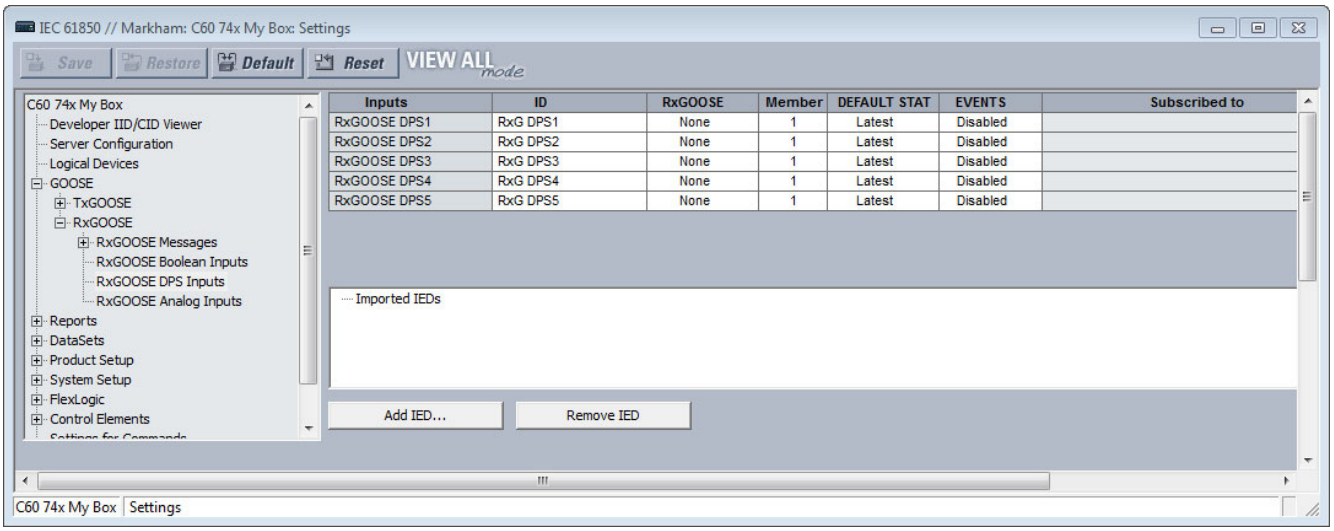

RxGOOSE DPS1 ID

Range: 0 to 20 characters

Default: RxG DPS1

This setting allows the user to assign descriptive text to the names of the four RxGOOSE DPS1 FlexLogic operands. The full operand name is the value of this setting appended with "Interm," "On," "Off," or "Bad." The standard and enhanced front panels display the first 13 characters of this setting plus the state suffix to fit the 20 character display.

RxGOOSE DPS1 RxGOOSE

Range: None, RxGOOSE1, RxGOOSE2, and so on

Default: None

This setting selects the GOOSE message containing the value that drives the RxGOOSE DPS1 FlexLogic operand. If set to None, the RxGOOSE DPS1 FlexLogic operand assumes its default state.

RxGOOSE DPS1 Member

Range: 1 to 64 in steps of 1

Default: 1

This setting selects the GOOSE message member that drives the RxGOOSE DPS1 FlexLogic operand. A setting of 1 selects the first member, 2 selects the second member, and so on. Entering a number greater than the number of members in the message and entering the number of a member that is not a Dbpos results in the RxGOOSE DPS1 FlexLogic operand assuming its default state. In the case that the member is a structure containing more than one Dbpos, the Subscribed to column identifies the particular Dbpos subscribed to.

RxGOOSE DPS1 DEFAULT STATE

Range: Intermediate-state, Off, On, Bad-state, Latest

Default: Latest

This setting selects the logic state for the data attribute @Master/GGIO3.IndPos01.stVal and the DPS FlexLogic operands when the UR has just completed start-up and the selected RxGOOSE has not yet received a message, and when the RxGOOSE has lost its connection with the publisher. When this setting is selected to Latest, the value of @Master/GGIO3.IndPosψψ.stVal is Intermediate-state when the UR has just completed start-up and the selected RxGOOSE has not yet received a message, and the latest received value when the RxGOOSE loses its connectivity with the publisher.

RxGOOSE DPS1 EVENTS

Range: Disabled, Enabled

Default: Disabled

This setting selects whether Off to On transitions of the RxGOOSE DPS1 FlexLogic operands are recorded by the event recorder. If set to Enabled, Off to On transitions are recorded. On to Off transitions are never recorded, even if events are enabled.

RxGOOSE analog inputs

Navigate to **Settings > Product Setup > Communications > IEC 61850 > GOOSE > RxGOOSE > RxGOOSE Analog Inputs**.

There are **Add IED** and **Remove IED** buttons. The **Add IED** button allows SCL files to be used, including ICD, CID, and SCD (supported in version 7.40 and later). When the file format is SCD, the system lists all IEDs inside the SCD file and lets the user select the ones to add.

Figure 5-23: RxGOOSE Analog Inputs panel

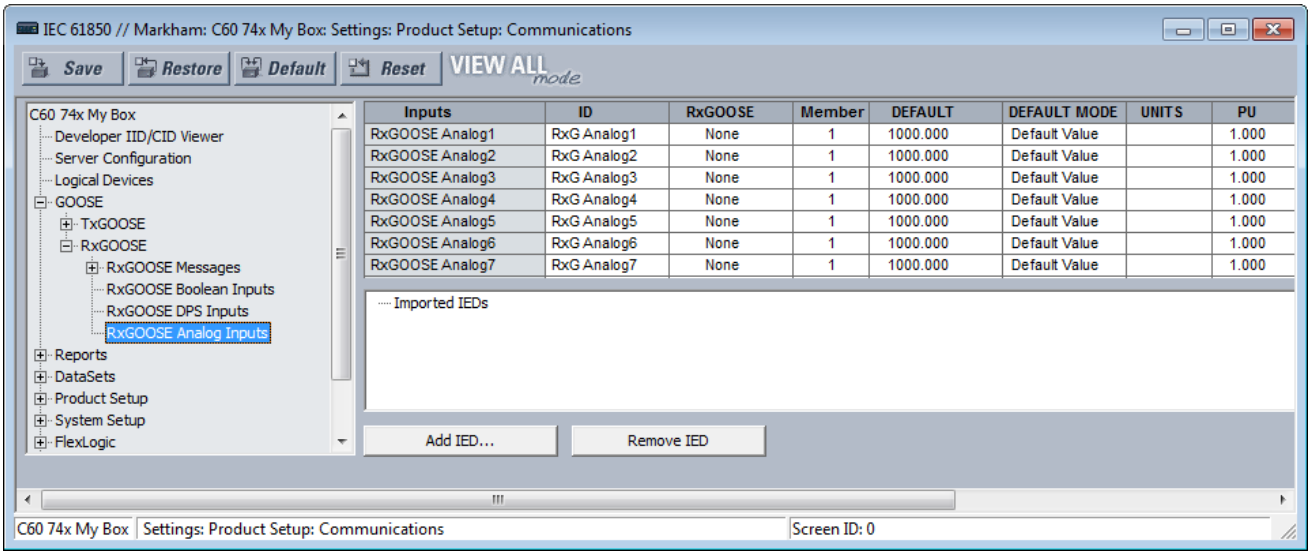

Inputs	ID	RxGOOSE	Member	DEFAULT	DEFAULT MODE	UNITS	PU
RxGOOSE Analog1	RxG Analog1	None	1	1000.000	Default Value		1.000
RxGOOSE Analog2	RxG Analog2	None	1	1000.000	Default Value		1.000
RxGOOSE Analog3	RxG Analog3	None	1	1000.000	Default Value		1.000
RxGOOSE Analog4	RxG Analog4	None	1	1000.000	Default Value		1.000
RxGOOSE Analog5	RxG Analog5	None	1	1000.000	Default Value		1.000
RxGOOSE Analog6	RxG Analog6	None	1	1000.000	Default Value		1.000
RxGOOSE Analog7	RxG Analog7	None	1	1000.000	Default Value		1.000

There are 32 RxGOOSE analog inputs.

RxGOOSE Analog1 ID

Range: 0 to 20 characters

Default: RxG Analog1

This setting allows the user to assign descriptive text to RxGOOSE Analog1. Unlike RxGOOSE Booleans and RxGOOSE DPS, the RxGOOSE Analog operands have fixed names, for example RxGOOSE Analog1.

RxGOOSE Analog1 RxGOOSE

Range: None, RxGOOSE1, RxGOOSE2, and so on

Default: None

This setting selects the GOOSE message that drives the RxGOOSE Analog1 FlexAnalog operand. If set to None, the RxGOOSE Analog1 FlexAnalog operand assumes its default state.

RxGOOSE Analog1 Member

Range: 1 to 64 in steps of 1

Default: 1

This setting selects the GOOSE message member that drives the RxGOOSE Analog1 FlexAnalog operand. A setting of 1 selects the first member, 2 selects the second member, and so on. Entering a number greater than the number of members in the message and entering the number of a member that does not contain a FLOAT32 results in the RxGOOSE Analog1 FlexAnalog operand assuming its default state. The Subscribed to column identifies the particular FLOAT32 subscribed to even if the member is a structure containing more than one FLOAT32.

RxGOOSE Analog1 DEFAULT

Range: -1000000.000 to 1000000.000 in steps of 0.001

Default: 1000.000

This setting specifies the value of the GOOSE analog input when the selected RxGOOSE has lost its connectivity with the publisher and the RxGOOSE Analog1 DEFAULT MODE is set to "Default Value." Otherwise this setting has no effect. This setting is stored as an IEEE 754 / IEC 60559 floating point number. Because of the large range of this setting, not all possible values can be stored. Some values can be rounded to the closest possible floating point number.

RxGOOSE Analog1 DEFAULT MODE

Range: Default Value, Last Known

Default: Default Value

When the selected RxGOOSE has lost its connectivity with the publisher and this setting is "Last Known," the value of the RxGOOSE Analog1 FlexLogic operand remains at the last received value. When the selected RxGOOSE has lost its connectivity with the publisher and this setting value is "Default Value," then the RxGOOSE Analog1 FlexLogic operand is defined by the RxGOOSE Analog1 DEFAULT setting. After restart, until a message is received, the operand value is the default value.

RxGOOSE Analog1 UNITS

Range: up to 4 characters

Default: empty string

This setting specifies a four-character string that is used in the actual values display of RxGOOSE Analog1.

RxGOOSE Analogs are floating-point values, with no units. The RxGOOSE UNIT and PU base settings allow the user to configure RxGOOSE Analog, so that it can be used in a FlexElement.

RxGOOSE Analogs that represent current, voltage, power, frequency, angles, or power factor can be used in a FlexElement. The following text must be used in the UNITS setting, to represent these types of analogs: A, V, W, var, VA, Hz, deg, and no text (blank setting) for power factor.

RxGOOSE Analogs can be compared to other RxGOOSE Analogs with any character string or no string.

RxGOOSE Analog1 PU Base in kilo

Range: 0.000 to 1000000000.000 in steps of 0.001

Default: 1.000

This setting specifies the per-unit base value for other B30 features to use with the RxGOOSE Analog1 operand. A FlexElement for instance subtracts two quantities after converting their values to integers rescaled to a common base, the common base being the largest of the base values of the two quantities. If one of quantities is RxGOOSE Analog1 and its per-unit base value is not appropriate, the rescaling operation can result in unnecessary loss of precision or overflow

in the integer result. The FlexElement Base Units table in the Settings > FlexLogic > FlexElements section later, which tabulates the per-unit base value used by its pickup setting and implies the per-unit base used by other FlexAnalogs, can be of use in selecting a value for the **RxGOOSE Analog1 PU** setting.

Some UR elements have requirements for the type of input operands, for instance current type or voltage type. These elements assume that RxGOOSE Analog operands are of whatever type is necessary to meet these requirements.

The per-unit base setting represents thousands, not single units. For example, a PU base of 1.000 is actually 1000 and a PU base of 0.001 is 1.

When using RxGOOSE Analogs and PU base in FlexElements, the largest value that can be displayed in the FlexElement actual values is 2,140,000.000.

Reports

Navigate to **Settings > Product Setup > Communications > IEC 61850 > Reports**.

Report settings

Navigate to **Settings > Product Setup > Communications > IEC 61850 > Reports > Report Settings**.

ReportSettings rptID

Range: Dyn, Conf
Default: Dyn

When set to Dyn, the RptID attribute in any buffered and unbuffered report control block can be modified by an MMS client while the control block's RptEna attribute is false. The RptID is the name of the report.

ReportSettings optFields

Range: Dyn, Conf
Default: Dyn

When set to Dyn, the OptFlds attribute in any buffered and unbuffered report control block can be modified by an MMS client while the control block's RptEna attribute is false.

ReportSettings bufTime

Range: Dyn, Conf
Default: Dyn

When set to Dyn, the BufTm attribute in any buffered and unbuffered report control block can be modified by an MMS client while the control block's RptEna attribute is false.

ReportSettings trgOps

Range: Dyn, Conf
Default: Dyn

When set to Dyn, the TrgOps attribute in any buffered and unbuffered report control block can be modified by an MMS client while the control block's RptEna attribute is false.

ReportSettings intgPd

Range: Dyn, Conf
Default: Dyn

When set to Dyn, the IntgPd attribute in any buffered and unbuffered report control block can be modified by an MMS client while the control block's RptEna attribute is false.

Buffered and unbuffered reports

Navigate to **Settings > Product Setup > Communications > IEC 61850 > Reports > Buffered Reports** or **Unbuffered Reports**.

Figure 5-24: IEC 61850 buffered report panel

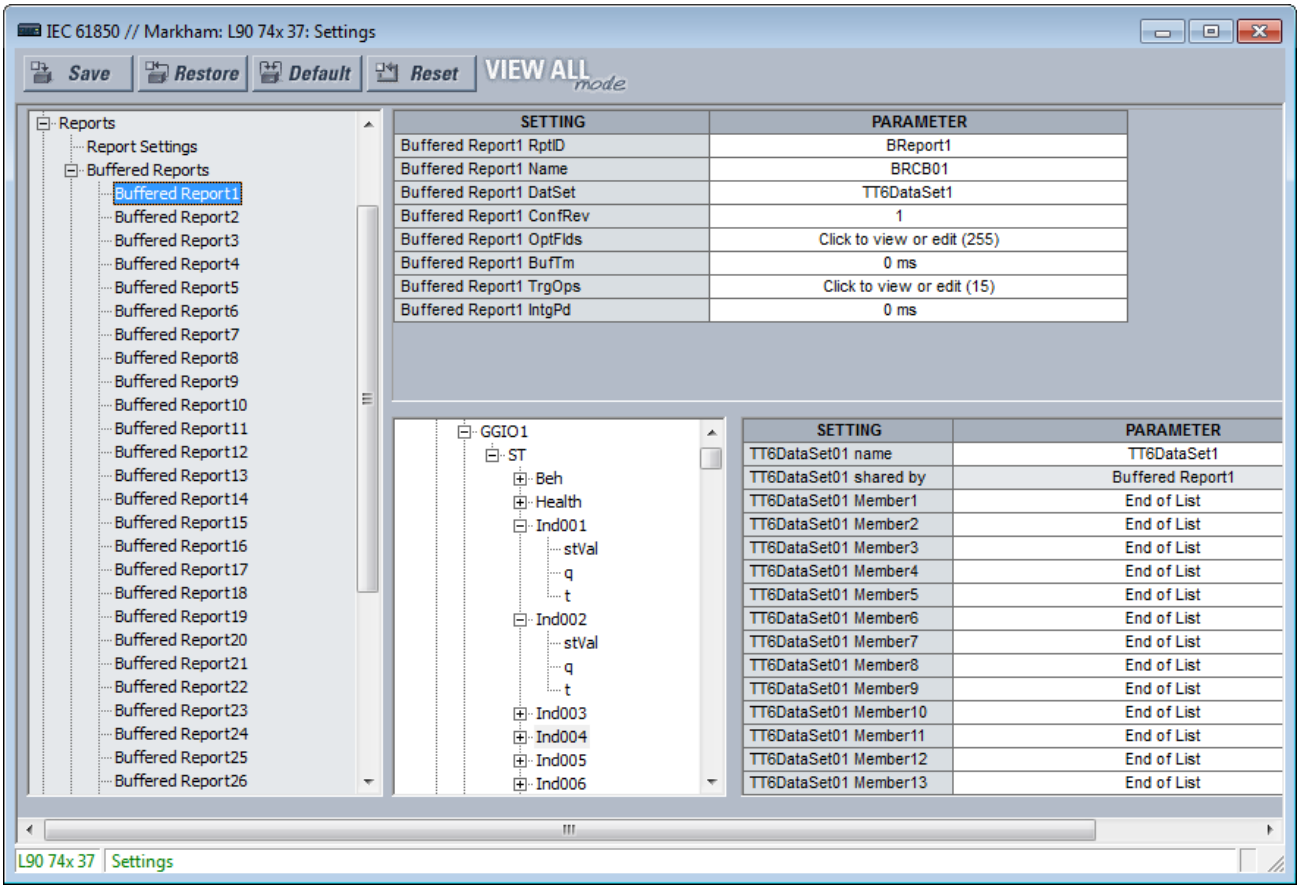

An IEC 61850 Report server is an efficient method to deliver generic substation event information from a single server to a single client, such as a supervisory control IED. A Configurable Report is a UR element implementing an IEC 61850 Report server, either of the buffered or unbuffered kind. The following table lists the number of Configurable Report elements. Each Configurable Report element can report the values of up to 64 FlexLogic or FlexAnalog operands. Buffered report elements queue value changes that occur while the client is offline and delivered when the client re-connects. Up to 512 events can be queued. Unbuffered control blocks purge all value change events when the connection to the client is lost; any events that occur while the client is not connected are lost.

Table 5-11: Number of report elements

	Number
Buffered reports	30
Unbuffered reports	18

Configurable Reports interoperate with any client device of any manufacturer that conforms to the IEC 61850 edition 1.0 or 2.0 report client requirements.

The entities whose values are reported by a Configurable Report are known as members. The members are itemized in an ordered list known as a data set. Each Configurable Report can use any one of the data sets provided.

Each enabled Configurable Report transmits an update to its client whenever a value change is detected in one or more of its members. Also, the control block can be configured to send integrity reports containing the present value of all members either on demand from the client or periodically. A TCP handshaking mechanism causes messages that are not read and acknowledged by the client to be retransmitted.

For a Configurable Report to operate, its members must be selected (that is, its data set configured) and a client must open a connection to, configure, and enable its report control block. Control blocks and data sets can be pre-configured by sending the B30 a CID file. See the UR Family Communications Guide for details. EnerVista UR Setup also can be used to select the data set members and to pre-configure the control blocks.

Each buffered report has the following settings.

Buffered Report1 RptID

Range: 0 to 129 VisibleString characters

Default: empty string

The name of the report. The entered value sets the RptID value in Buffered Report1 messages, and it can be used by the client to discriminate Buffered Report1 messages from other messages. If the number of characters entered is zero, the value used for RptID in messages is an ObjectReference to the report's control block, that is, "<LDName>/LLN0BR"BRCB01".

Buffered Report1 Name

Range: 0 to 32 VisibleString characters

Default: BRCB01

The entered value sets the report control block name value for Buffered Report1.

Buffered Report1 DatSet

Range: None, TT6DataSet1, TT6 DataSet2, ..., TT3DataSet01, TT3DataSet02, ...

Default: None

This setting selects the data set whose members' status is reported in Buffered Report1 messages using the UR Setup software designator for the data set. The IEC 61850 name of the data sets are configured in the Datasets panel, as described later.

An ObjectReference to the data set, which consists of the concatenation of the string "<LDName>/LLN0$" and the data set name, is used in the datSet field of report messages, and it can be used by the client to discriminate Buffered Report1 messages from other messages.

The performance of the report is determined by the performance of the selected dataset. When the selection is TT3DataSet01, TT3DataSet02, ... it is possible that transient events can be missed.

To configure a DataSet, select it at the top of the window from the drop-down list, for example DataSet02 shown in the previous figure. In the lower part of the window, drag and drop configuration items to the right side. For example select the **ST Ind001 stVal** item and drag it to DataSet Member 1. Dataset members configured here affect other Report or TxGOOSE control blocks that use the same DataSet.

Buffered Report1 ConfRev

Range: 0 to 4294967295 in steps of 1

Default: 1

The entered value sets the confRev value in Buffered Report1 messages, and it can be used by clients to discriminate report messages of the expected configuration revision from messages of a different revision. The standard requires that confRev be incremented each time the members or the order of the members is changed, and each time the data set name is changed. The standard states that the value of 0 is reserved.

Buffered Report1 OptFlds

Range: The check box for each individual bit can be enabled or not (see figure)

Default: All bits enabled/ true

The OptFlds setting is bitstring that controls which of the optional fields are included in report messages. The figure shows the available option bits. To reduce message size, uncheck any fields that are not needed.

Figure 5-25: Options for buffered report messages

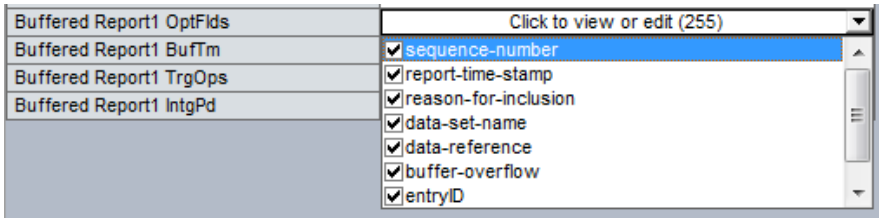

Buffered Report1 BufTm

Range: 0 to 4294967295 in steps of 1

Default: 0 ms

The entered value sets the time interval in milliseconds for the buffering of events for inclusion in a single report.

Buffered Report1 TrgOps

Range: The check box for an individual bit can be enabled or not

Default: All bits enabled / true

The TrgOps setting is bitstring that controls which trigger conditions are monitored in this report. The options are as follows. Uncheck any trigger conditions that are not needed.

- data-change
- quality-change
- integrity
- general interrogation

Buffered Report1 IntgPd

Range: 0 to 4294967295 in steps of 1

Default: 0 ms

The entered value sets the period in milliseconds for generating Buffered Report1 integrity reports. An integrity report includes the values of all members of the referenced data set, whether a change has occurred or not.

Each unbuffered report has the following settings.

Unbuffered Report1 RptID

Range: 0 to 129 VisibleString characters

Default: empty string

The name of the report. The entered value sets the RptID value in Unbuffered Report1 messages, and it can be used by the client to discriminate Unbuffered Report1 messages from other messages. If the number of characters entered is zero, the value used for RptID in messages is an ObjectReference to the report's control block, that is, "<LDName>/LLN0RP"URCB01".

Unbuffered Report1 Name

Range: 0 up to 32 VisibleString characters

Default: URCB01

The entered value sets the report control block name value for Unbuffered Report1.

Unbuffered Report1 DatSet

Range: None, TT6DataSet1, TT6 DataSet2, ..., TT3DataSet01, TT3DataSet02, ...

Default: None

This setting selects the data set whose members' status is reported in Unbuffered Report1 messages using the UR Setup software designator for the data set. The IEC 61850 name of the data sets are configured in the Datasets panel, as described later.

An ObjectReference to the data set, which consists of the concatenation of the string "<LDName>/LLN0$" and the data set name, is used in the datSet field of report messages, and it can be used by the client to discriminate Unbuffered Report1 messages from other messages.

The performance of the report is determined by the performance of the selected dataset. When the selection is TT3DataSet01, TT3DataSet02, ... it is possible that transient events can be missed.

Unbuffered Report1 ConfRev

Range: 0 to 4294967295 in steps of 1
Default: 1

The entered value sets the confRev value in Unbuffered Report1 messages, and it can be used by clients to discriminate report messages of the expected configuration revision from messages of a different revision. The standard requires that confRev be incremented each time the members or the order of the members is changed, and each time the data set name is changed. The standard states that the value of 0 is reserved.

Unbuffered Report1 OptFlds

Range: The check box for an individual bit can be enabled or not
Default: All bits enabled / true

The OptFlds setting is bitstring that controls which of the optional fields are included in report messages. The options are as follows. To reduce message size, uncheck any fields that are not needed.

- sequence-number
- report-time-stamp
- reason-for-inclusion
- data-set-name
- data-reference
- conf-revision

The OptFlds bits buffer-overflow and entryID also listed are not applicable to unbuffered reports even though the bits exist in the protocol. They are unchecked by default.

Unbuffered Report1 BufTm

Range: 0 to 4294967295 in steps of 1
Default: 0 ms

The entered value sets the time interval in milliseconds for the buffering of events for inclusion into a single report.

Unbuffered Report1 TrgOps

Range: The check box for an individual bit can be enabled or not
Default: All bits enabled / true

The TrgOps setting is bitstring that controls which trigger conditions are monitored in this report. The options are as follows. Uncheck any trigger conditions that are not needed.

- data-change
- quality-change
- integrity
- general interrogation

Unbuffered Report1 IntgPd

Range: 0 to 4294967295 in steps of 1
Default: 0 ms

The entered value sets the period in milliseconds for generating Unbuffered Report1 integrity reports. An integrity report includes the values of all members of the referenced data set, whether a change has occurred or not.

DataSets

Navigate to **Settings > Product Setup > Communications > IEC 61850 > DataSets**.

As mentioned in the preceding GOOSE and Reports sections, the members whose values are communicated by these services are itemized in an ordered list known as a data set. Each UR with the IEC 61850 option has 18 data sets (six fast and 12 slow). Each data set can contain as many as 64 members. Any data set can be used simultaneously by any number of TxGOOSE elements and/or by any number of Configurable Report elements. UR Setup software can configure any FlexLogic operands and any FlexAnalog operands as members.

Figure 5-26: IEC 61850 DataSets

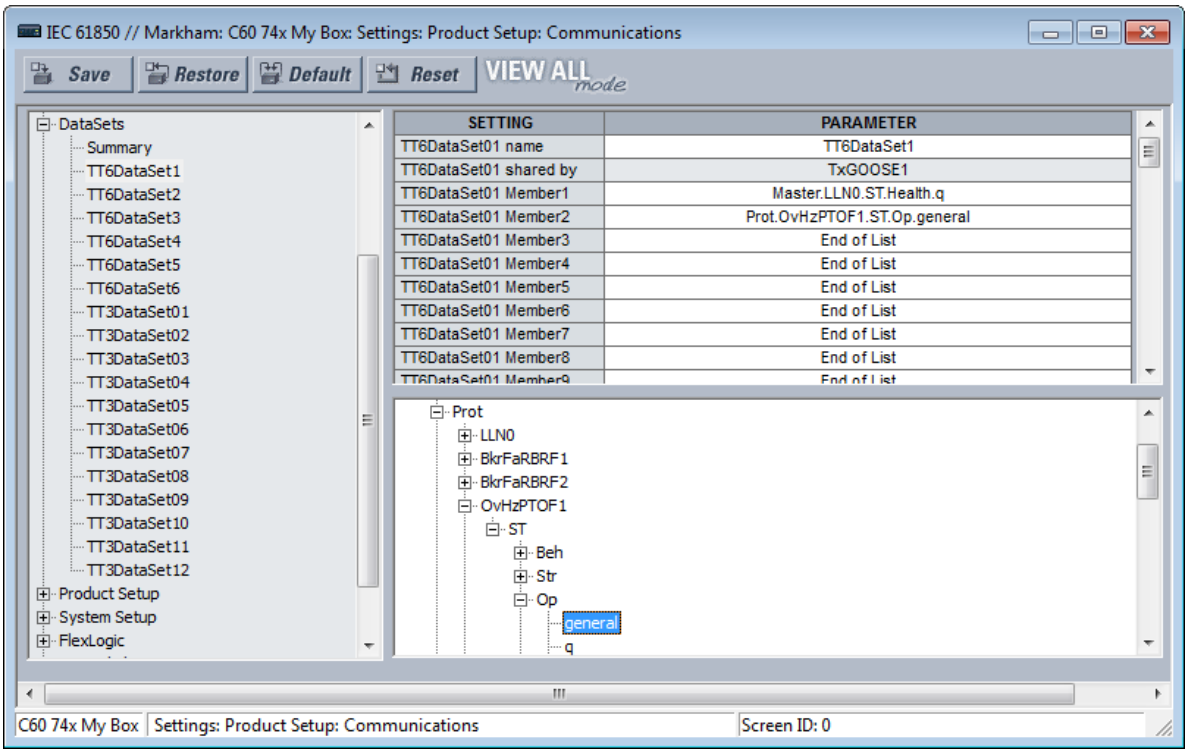

UR Setup software requires data set members to be IEC 61850 data objects or data attributes with Functional Constraint ST or MX. Certain FlexLogic and FlexAnalog operands have factory-assigned data attributes as tabulated in the UR Family Communications Guide. All FlexLogic and FlexAnalog operands can be user-assigned to GGIO1 or GGIO4 data attributes, so that operands without factory-assigned data attributes can still have their values published. See the GGIO1 and GGIO4 sections later for details.

Datasets used by TxGOOSE1, TxGOOSE2, and/or by reports also provide a chatter suppression service for their Boolean members. Oscillation in a value, also known as chatter, can be caused by errors in logic programming, inadequate hysteresis (deadband) on a threshold, or a failed station component. Chatter can flood a communications network with GOOSE messages, degrading response time for all users. If chatter is detected in a Boolean member, TxGOOSE suspends GOOSE event message triggering and report message triggering from that member for as long as the condition exists, and for a minimum period of one second. While sending is suspended, a self-test message identifying the specific data item detected as oscillating is activated.

For a summary of the panels in which the data sets are used, the path is **Settings > Product Setup > Communications > IEC 61850 > DataSets > Summary**.

For the settings, navigate to **Settings > Product Setup > Communications > IEC 61850 > DataSets > TT6DataSet1** for the first data set.

Copy and paste functions are available when right-clicking a DataSet. They allow the target dataset to be configured based on its order code. If some dataset items are not supported, they are not pasted, and a warning message shows a list of dataset items that were not supported and not pasted. The **DataSet name** is not copied or pasted. In short, use this feature to copy a **DataSet Member** setting and paste it into another Member setting, a text file, or Word, as examples.

Figure 5-27: Member right-click

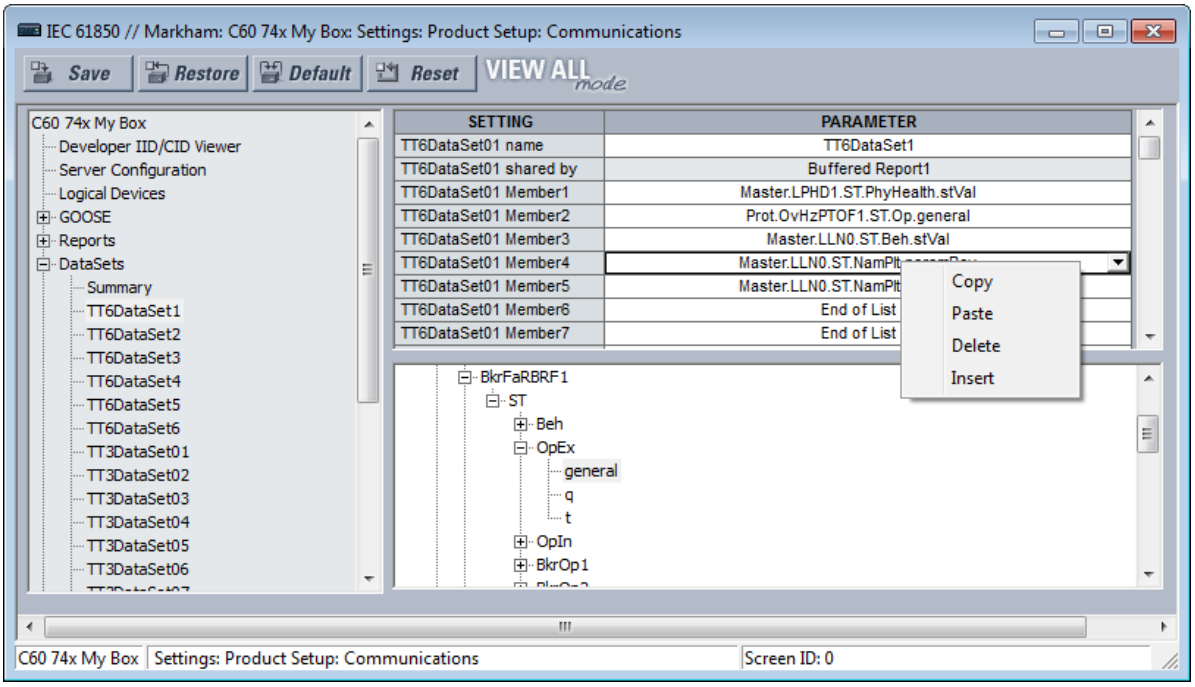

5

DataSet01 name

Range: 0 to 32 VisibleString characters

Default: DataSet01

The value entered sets the name of the data set, which is required to be unique within the UR for proper operation. The value entered sets the name of the data set, which is required to be unique within the UR for proper operation. Fast datasets start with TT6, and slow datasets start with TT3. Up to six fast datasets are allowed. Up to four fast GOOSE datasets are allowed.

An ObjectReference to the data set consists of a string that is the concatenation of "<LDName>/LLN0$" and the DataSet01 name setting value. An ObjectReference to the data set is published in the datSet field of TxGOOSE messages, and it can be used by subscribers to discriminate the messages of that TxGOOSE from other GOOSE messages. An ObjectReference to the data set is optionally published in the DatSet field of Report messages. Valid characters are upper and lowercase letters, digits, and the underscore (_) character. The first character must be a letter.

DataSet01 shared by

Range: 0 to 32 VisibleString characters

Default:

Names of all control blocks that use this DataSet. Read-only field.

DataSet01 Member1

Range: End of List or any instantiated 61850 data object or data attribute with Functional Constraint ST or MX

Default: End of List

This setting specifies the first member in TxGOOSE1 messages. There is a similar setting for each of the up to 64 members that the UR allows in a Dataset. Only values of members before the first set to End of List are published.

Select the member from the drop-down list. Or right-click an entry to copy, paste, delete, or insert.

Product setup

Navigate to **Settings > Product Setup > Communications > IEC 61850 > Product Setup**.

Security

Navigate to **Settings > Product Setup > Communications > IEC 61850 > Product Setup > Security**.

Figure 5-28: IEC 61850 Security

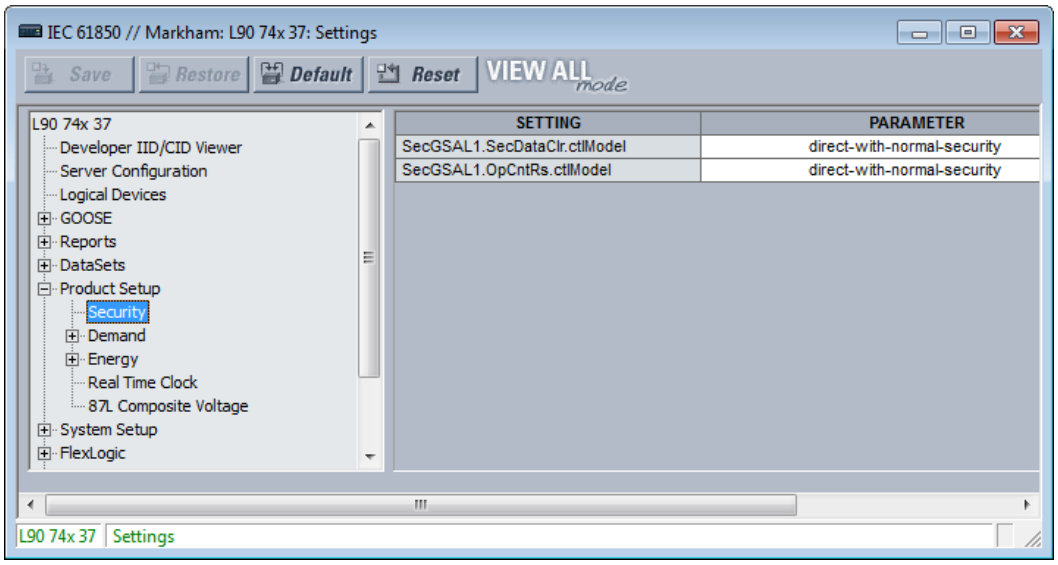

SecGSAL1.SecDataClr.ctlModel

Range: direct-with-normal-security, sbo-with-normal-security
Default: direct-with-normal-security

This setting selects the control model that clients must use to clear security data via commands to SecGSAL1.SecDataClr. "sbo" here is select-before-operate.

SecGSAL1.OpCntRs ctlModel

Range: direct-with-normal-security, sbo-with-normal-security
Default: direct-with-normal-security

This setting selects the control model that clients must use to clear security data via commands to SecGSAL1.OpCntRs. "sbo" here is select-before-operate.

Demand

Deadband parameters of measured values related to the Demand metering are configured here.

Energy

Deadband parameters of measured values related to the Energy metering are configured here.

Real Time Clock

Navigate to **Settings > Product Setup > Communications > IEC 61850 > Product Setup > Real Time Clock**.

Figure 5-29: IEC 61850 Real Time Clock

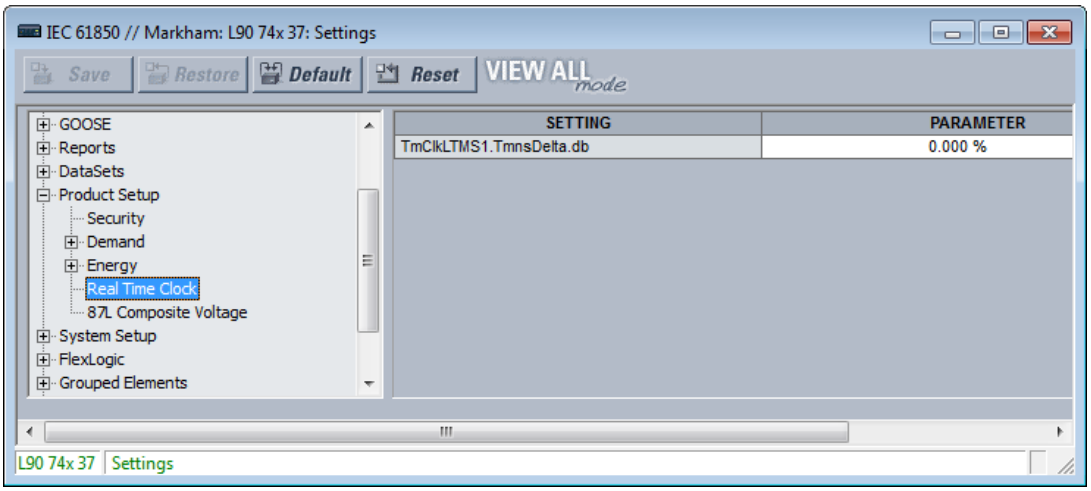

TmClkLTMS1.TmnsDelta.db

Range: 0.000 to 100.000 %

Default: 0.000 %

This setting is a deadband setting and is used by the relay to determine when to update the "mag" and "cVal" values from the associated "instMag" and "instCVal" values. The value shall represent the percentage of difference between maximum and minimum in units of 0.001%. The minimum and maximum values for TmnsDelta data object are -500000000 ns and 500000000 ns respectively and for example, a setting value of 0.002% results in the dead banded value of (500000000 - (-500000000)) * 0.002 / 100 = 20000 ns. The default setting value of 0.000% does not update the "mag" and "cVal" values.

5

Deadband settings

A deadband is a range in which no action occurs, usually expressed as a percentage.

The IEC 61850 panels contain hundreds of deadband settings, such as in the following panels: Product Setup > Real Time Clock, FlexLogic, Control Elements, and GGIO4. Each panel is not outlined here.

Deadband setting names all end either with "DB" or .db. As they all work the same way, but each on a different analog value, a single description applicable to all deadband settings is given here. The analog value that each deadband setting applies is usually obvious from the name of the setting. However, a tabulation of the analog values and their associated deadband setting can be found in the UR Family Communications Guide.

Figure 5-30: Deadband settings with .db suffix

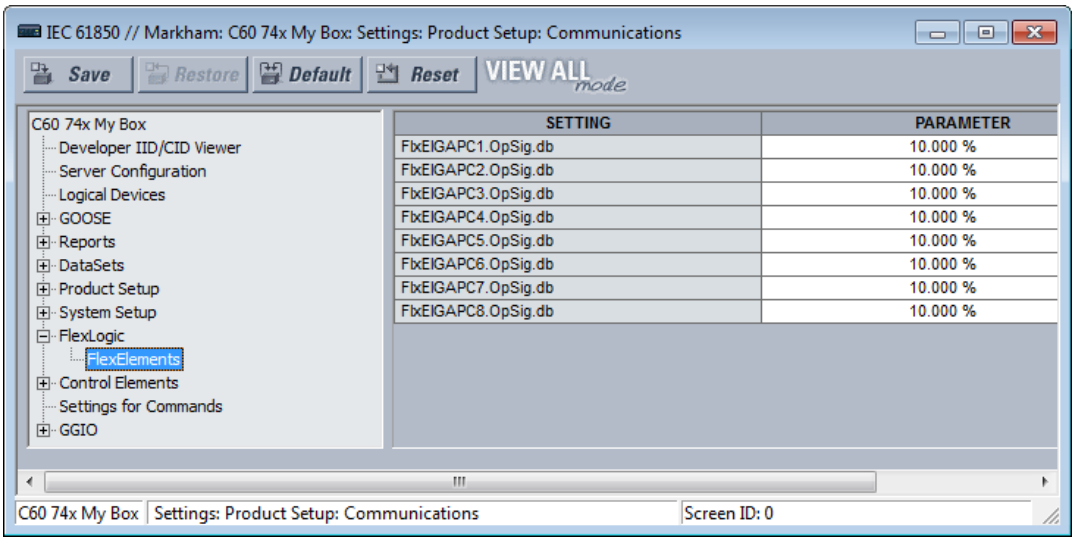

GOOSE, buffered report, and unbuffered report messages are for the most part transmitted only when there is a value change in one or more of their members. Most analog values continuously dither by an amount that is not significant. Were a report to be sent each time an insignificant analog value change occurred, then the communications network floods with GOOSE and report messages, degrading response time for all users.

To control this, a deadband setting is provided for each analog value. Also, in addition to the present actual value of each analog ("instMag" in the following figure), there is a deadbanded value ("mag" in the figure), which is updated with the present value only when the difference between the two exceeds the deadband setting (db in the figure). Changes to this deadbanded value trigger transmissions when included in GOOSE and report data sets.

5

Figure 5-31: Deadband settings

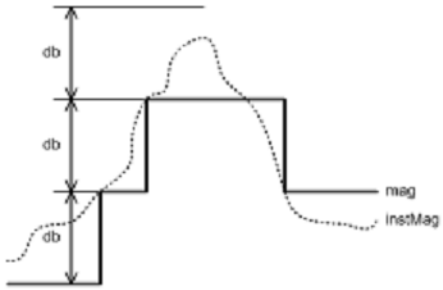

Deadband settings are entered in UR Setup software in units of percent of the difference between the "max." and "min." of the associated analog value. A zero deadband setting suppresses transmission triggering. The range of deadband settings is 0.000 to 100.000% in steps of 0.001. The default value is 0.000%.

GGIO4 elements have individual settings for "min." and "max." The min. and max. for FlxEIGAPC#.OpSig.db (FLEXELEMENT # OpSig) are -50 pu and +50 pu respectively. The min. value for all other quantities is 0. The max. values are as follows:

- Phase current — 46 x phase CT primary setting
- Neutral current — 46 x ground CT primary setting
- Ground current (sensitive ground CT) — 4.6 x sensitive ground CT primary setting
- Phase, phase-to-phase, and sequence voltage — 275 x phase VT ratio setting
- Auxiliary voltage — 275 x auxiliary VT ration setting
- Power (real, reactive, apparent, 3-phase, and 1-phase) — 4 × phase CT primary setting × 1.5 × VT Secondary setting × VT ratio setting

- Energy (real or imaginary) — 4 × phase CT primary setting × 1.5 × VT Secondary setting × VT ratio setting x 1 hour
- Frequency — 90 Hz
- Frequency rate of change — 90 Hz/s
- Power factor — 2
- Angle — 360 degrees

Select the deadband settings from knowledge of the characteristics of the power system quantity measured and knowledge of the demands of the applications receiving the measurement via GOOSE or report such that changes of significance to the application are promptly reported, yet the network is not overly burdened with event messages.

Signal sources

Deadband parameters of measured values related to the signal sources are configured here.

Breaker 1

The UR breaker control and status monitoring elements have certain settings that configure how the IEC 61850 protocol interacts with these elements. These settings are described in this section. See the Breakers section in the System Setup section of this chapter for details on the operation of breaker control elements.

Navigate to **Settings > Communications > IEC 61850 > System Setup > Breakers > Breaker 1** to access the settings that configure the IEC 61850 protocol interface with the first breaker control and status monitoring element. The settings and functionality for the others are similar.

Figure 5-32: IEC 61850 Breaker panel

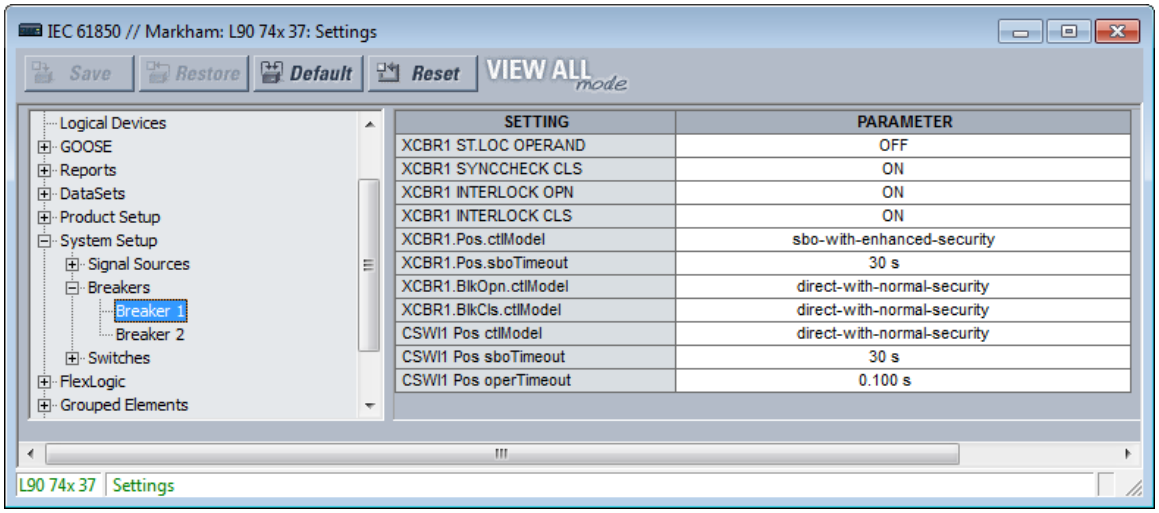

XCBR1 ST.LOC OPERAND

Range: any FlexLogic operand
Default: OFF

This setting is used to select a FlexLogic operand that declares to IEC 61850 services that breaker 1 is selected for local control. While the selected operand is asserted, Bkr0XCBR1.Loc.stVal is true and IEC 61850 commands to BkrCSWI1.Pos and Bkr0XCBR1.Pos are not accepted, and a Negative Response (-Rsp) is issued with the REASON CODE of Blocked-by-switching-hierarchy.

XCBR1 SYNCCHECK CLS

Range: any FlexLogic operand
Default: ON

This setting is used to select a FlexLogic operand that declares to IEC 61850 services that synchrocheck conditions are acceptable for closing breaker 1. If a SelectWithValue or Operate service with ctlVal true and with Check.SynchroCheck true is requested of either BkrCSWI1.Pos or Bkr0XCBR1.Pos and the selected operand is not asserted, a Negative Response (-Rsp) is issued with the REASON CODE of Blocked-by-synchrocheck.

XCBR1 INTERLOCK OPN

Range: any FlexLogic operand
Default: ON

This setting is used to select a FlexLogic operand that declares to IEC 61850 services that interlocking conditions are not acceptable for opening breaker 1. While the selected operand is asserted, the value of BkrCILO.EnaOpn.stVal is false. If a SelectWithValue or Operate service with ctlVal false and with Check.Interlock-check true is requested of either BkrCSWI1.Pos or Bkr0XCBR1.Pos, and the selected operand is not activated, a Negative Response (-Rsp) is issued with the REASON CODE of Blocked-by-interlocking.

XCBR1 INTERLOCK CLS

Range: any FlexLogic operand
Default: ON

This setting is used to select a FlexLogic operand that declares to IEC 61850 services that interlocking conditions are not acceptable for closing breaker 1. While the selected operand is asserted, the value of BkrCILO.EnaCls.stVal is false. If a SelectWithValue or Operate service with ctlVal true and with Check.Interlock-check true is requested of either BkrCSWI1.Pos or Bkr0XCBR1.Pos and the selected operand is not activated, a Negative Response (-Rsp) is issued with the REASON CODE of Blocked-by-interlocking.

XCBR1 Pos ctlModel

Range: status-only, direct-with-normal-security, sbo-with-normal-security, direct-with-enhanced-security, sbo-with-enhanced-security
Default: sbo-with-enhanced-security

This setting selects the control model clients must use to successfully control the breaker 1 signals marked Bkr0XCBR1.PosOpn.ctlVal and Bkr0XCBR1.PosCls.ctlVal on the Breaker Control Logic (Sheet 1 of 2) diagram in the Settings > System Setup section later in this chapter. These signals force a breaker 1 three-phase trip or close control while the operand selected by setting XCBR1 ST.LOC OPERAND is not active.

"sbo" here is select-before-operate. Enhanced security means that the UR reports to the client the breaker 1 position at the end of the command sequence.

XCBR1 Pos sboTimeout

Range: 2 to 60 s in steps of 1 s
Default: 30 s

This setting specifies the maximum time between a select and an operate command to breaker 1 signals marked Bkr0XCBR1.PosOpn.ctlVal and Bkr0XCBR1.PosCls.ctlVal in order for the operand to be successful. This setting is only relevant when XCBR1 Pos ctlModel is sbo-with-normal-security or sbo-with-enhanced-security.

XCBR1 BlkOpn ctlModel

Range: status-only, direct-with-normal-security, sbo-with-normal-security
Default: direct-with-normal-security

This setting selects the control model clients must use to successfully control the breaker 1 signal marked Bkr0XCBR1.BlkOpn.ctlVal signal on the Breaker Control Logic (Sheet 1 of 2) diagram in the Settings > System Setup section later. This signal when true blocks breaker 1 trip control while the operand selected by setting XCBR1 ST.LOC OPERAND is not active.

XCBR1 BlkCls ctlModel

Range: status-only, direct-with-normal-security, sbo-with-normal-security

Default: direct-with-normal-security

This setting selects the control model clients must use to successfully control the breaker 1 signal marked Bkr0XCBR1.BlkCls.ctlVal signal on the Breaker Control Logic (Sheet 1 of 2) diagram in the Settings > System Setup section later. This signal when true blocks breaker 1 close control while the operand selected by setting XCBR1 ST.LOC OPERAND is not active.

CSWI1 Pos ctlModel

Range: status-only, direct-with-normal-security, sbo-with-normal-security, direct-with-enhanced-security, sbo-with-enhanced-security

Default: direct-with-normal-security

This setting selects the control model clients must use to successfully control the breaker 1 signals marked BkrCSWI1.PosOpn.ctlVal and BkrCSWI1.PosCls.ctlVal on the Breaker Control Logic (Sheet 1 of 2) diagram in the Settings > System Setup section earlier. These signals force a breaker 1 three-phase trip or close control while the operand selected by setting XCBR1 ST.LOC OPERAND is not active.

CSWI1 Pos sboTimeout

Range: 2 to 60 s in steps of 1 s

Default: 30 s

This setting specifies the maximum time between a select and an operate command to breaker 1 via BkrCSWI1.Pos in order for the operand to be successful. This setting is only relevant when CSWI1 Pos ctlModel is sbo-with-normal-security or sbo-with-enhanced-security.

CSWI1 Pos operTimeout

Range: 0.000 to 2.000 s in steps of 0.001s

Default: 0.100 s

This setting specifies the maximum time between an operate command to breaker 1 via BkrCSWI1.Pos until BkrCSWI1.Pos.stVal enters the commanded state. The command terminates if the commanded state is not reached in the set time.

Switch 1

The UR disconnect switch control and status monitoring elements have certain settings that configure how the IEC 61850 protocol interacts with these elements. These settings are described in this section. See the Settings > System Setup > Disconnect Switches section later in this chapter for details on the operation of the disconnect switch control elements.

Navigate to **Settings > Product Setup > Communications > IEC 61850 > System Setup > Switches > Switch 1** to access the settings that configure the IEC 61850 protocol interface with the first disconnect switch control and status monitoring element. The settings and functionality for the others are similar.

Figure 5-33: Switch panel

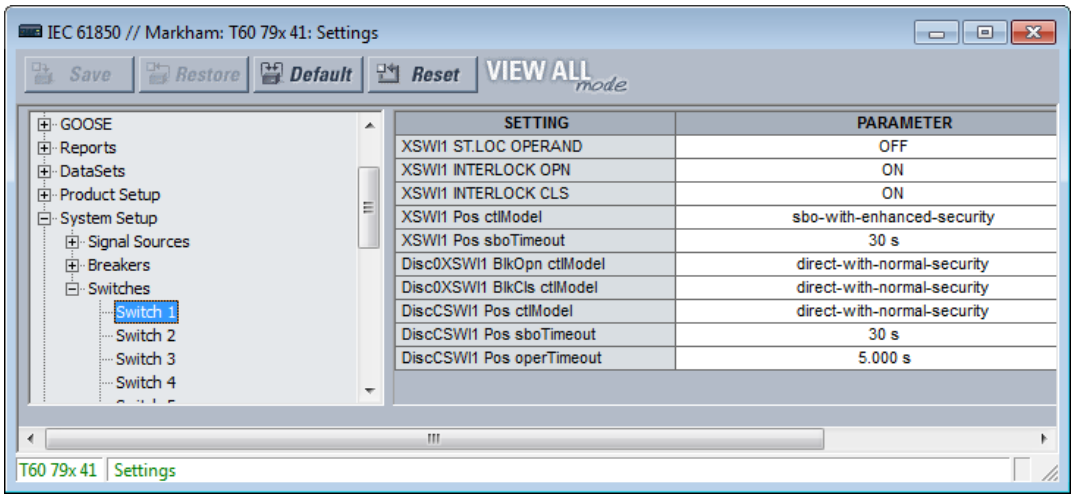

XSWI1 ST.LOC OPERAND

Range: any FlexLogic operand

Default: OFF

This setting is used to select a FlexLogic operand that declares to IEC 61850 services that disconnect switch 1 is selected for local control. While the selected operand is asserted, Disc0XSWI1.Loc.stVal is true and IEC 61850 commands to DiscCSWI1.Pos and Disc0XSWI1.Pos are not accepted, and a Negative Response (-Rsp) is issued with the REASON CODE of Blocked-by-switching-hierarchy.

XSWI1 INTERLOCK OPN

Range: any FlexLogic operand

Default: ON

This setting is used to select a FlexLogic operand that declares to IEC 61850 services that interlocking conditions are not acceptable for opening disconnect switch 1. While the selected operand is asserted, the value of DiscCILO.EnaOpn.stVal is false. If a SelectWithValue or Operate service with ctlVal false and with Check.Interlock-check true is requested of DiscCSWI1.Pos or Disc0XSWI1.Pos and the selected operand is not activated, a Negative Response (-Rsp) is issued with the REASON CODE of Blocked-by-interlocking.

XSWI1 INTERLOCK CLS

Range: any FlexLogic operand

Default: ON

This setting is used to select a FlexLogic operand that declares to IEC 61850 services that interlocking conditions are not acceptable for closing disconnect switch 1. While the selected operand is asserted, the value of DiscCILO.EnaCls.stVal is false. If a SelectWithValue or Operate service with ctlVal true and with Check.Interlock-check true is requested of DiscCSWI1.Pos or Disc0XSWI1.Pos and the selected operand is not activated, a Negative Response (-Rsp) is issued with the REASON CODE of Blocked-by-interlocking.

XSWI1 Pos ctlModel

Range: status-only, direct-with-normal-security, sbo-with-normal-security, direct-with-enhanced-security, sbo-with-enhanced-security

Default: sbo-with-enhanced-security

This setting selects the control model that clients must use to successfully control the disconnect switch 1 signals marked Disc0XCBR1.PosOpn.ctlVal and Disc0XCBR1.PosCls.ctlVal on the Disconnect Switch Logic diagram in the Settings > System Setup section later. These signals force a disconnect switch trip or close control while the operand selected by setting XSWI1 ST.LOC OPERAND is not active.

"sbo" here is select-before-operate. Enhanced security means that the B30 reports to the client the disconnect switch 1 position the end of the command sequence.

XSWI1 Pos sboTimeout

Range: 2 to 60 s in steps of 1 s

Default: 30 s

This setting specifies the maximum time between a select and an operate command to disconnect switch 1 signals marked Disc0XCBR1.PosOpn.ctlVal and Disc0XCBR1.PosCls.ctlVal in order for the operand to be successful. This setting is only relevant when XSWI1 Pos ctlModel is sbo-with-normal-security or sbo-with-enhanced-security.

Disc0XSWI1 BlkOpn ctlModel

Range: status-only, direct-with-normal-security, sbo-with-normal-security

Default: direct-with-normal-security

This setting selects the control model clients must use to successfully control the disconnect switch 1 signal marked DiscCSWI1.BlkOpn.ctlVal signal on the Disconnect Switch Logic diagram in the Settings > System Setup section later. This signal when true blocks disconnect switch 1 trip control while the operand selected by setting XSWI1 ST.LOC OPERAND is not active.

Disc0XSWI1 BlkCls ctlModel

Range: status-only, direct-with-normal-security, sbo-with-normal-security

Default: direct-with-normal-security

This setting selects the control model clients must use to successfully control the disconnect switch 1 signal marked DiscCSWI1.BlkCls.ctlVal signal on the Disconnect Switch Logic diagram in the Settings > System Setup section later. This signal when true blocks disconnect switch 1 close control while the operand selected by setting XSWI1 ST.LOC OPERAND is not active.

Disc0CSWI1 Pos ctlModel

Range: status-only, direct-with-normal-security, sbo-with-normal-security, direct-with-enhanced-security, sbo-with-enhanced-security

Default: direct-with-normal-security

This setting selects the control model clients must use to successfully control the disconnect switch 1 signals marked DiscCSWI1.PosOpn.ctlVal and DiscCSWI1.PosCls.ctlVal on the Disconnect Switch Logic diagram in the Settings > System Setup section later. These signals force a disconnect switch trip or close control while the operand selected by setting XSWI1 ST.LOC OPERAND is not active.

Disc0CSWI1 Pos sboTimeout

Range: 2 to 60 s in steps of 1 s

Default: 30 s

This setting specifies the maximum time between a select and an operate command to disconnect switch 1 via BkrCSWI1.Pos in order for the operand to be successful. This setting is only relevant when CSWI1 Pos ctlModel is sbo-with-normal-security or sbo-with-enhanced-security.

Disc0CSWI1 Pos operTimeout

Range: 0.000 to 65.535 s in steps of 0.001s

Default: 5.000 s

This setting specifies the maximum time between an operate command to disconnect switch 1 via BkrCSWI1.Pos until BkrCSWI1.Pos.stVal enters the commanded state. The command terminates if the commanded state is not reached in the set time.

Setting Groups

The UR implements a setting groups element as detailed in the Control Elements > Setting Groups section of this chapter. The active setting group and the setting group open for edits can be selected via MMS commands SelectActiveSG and SelectEditSG. The setting related to these IEC 61850 commands are described here.

Navigate to **Settings > Product Setup > Communications > IEC 61850 > Control Elements > Setting Groups** to access the setting that configures the IEC 61850 setting group commands.

Figure 5-34: Setting Groups panel

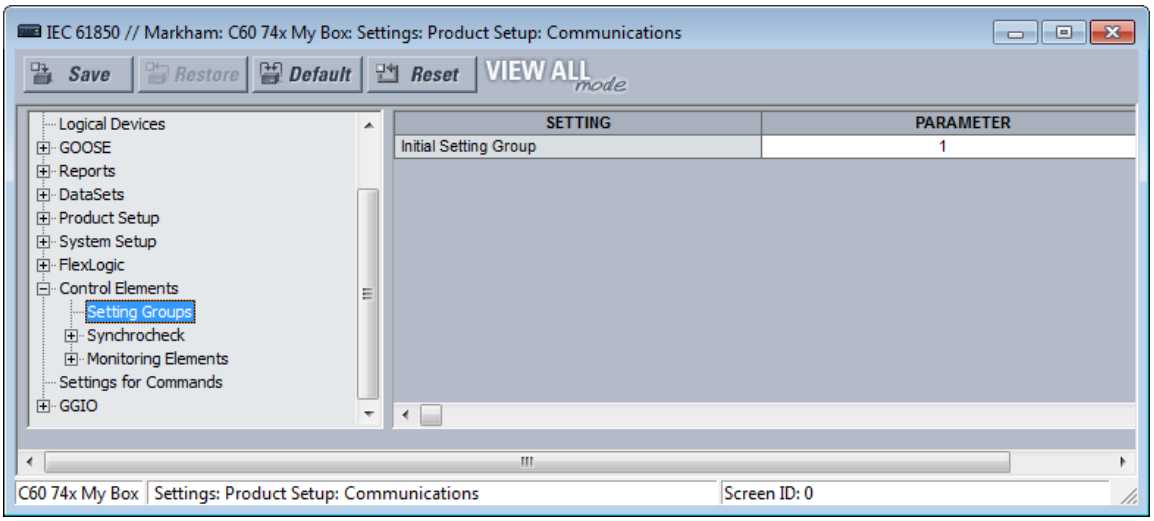

Initial Setting Group

Range: 1 to 6 in steps of 1

Default: 1

The entered value sets the initial value of the non-volatile register normally controlled by the service SelectActiveSG. This initialization occurs only on the UR reboot immediately following the receipt of a valid CID file.

This setting is not mapped into the IEC 61850 information model, but sets the value of SettingControl element attribute actSG in SCL files.

Commands

The UR implements a number of clear records commands as detailed in the Commands and Targets chapter of this manual. Several of these commands also can be issued via IEC 61850. The settings related to these IEC 61850 commands are described here.

Navigate to **Settings > Product Setup > Communications > IEC 61850 > Settings for Commands** to access the settings that configure the IEC 61850 protocol interface for record clear commands. The content varies with relay capability.

Figure 5-35: Commands panel

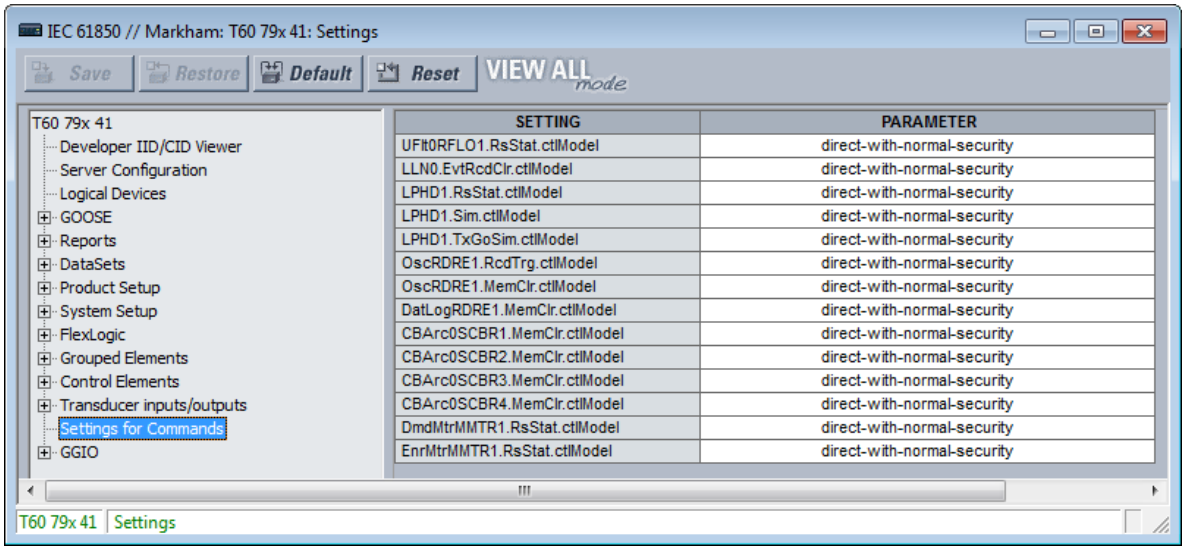

UFltRptRFLO1.RsStat.ctlModel

Range: direct-with-normal-security, sbo-with-normal-security
Default: direct-with-normal-security

This setting selects the control model clients must use to successfully control the command CLEAR FAULT REPORTS. "sbo" here is select-before-operate. Enhanced security means that the B30 reports to the client the breaker 1 position at the end of the command sequence.

LLN0.EvtRcdClr.ctlModel

Range: direct-with-normal-security, sbo-with-normal-security
Default: direct-with-normal-security

This setting selects the control model clients must use to successfully control the command CLEAR EVENT RECORDS.

LPHD1.RsStat.ctlModel

Range: direct-with-normal-security, sbo-with-normal-security
Default: direct-with-normal-security

This setting selects the control model clients must use to successfully control the command CLEAR ALL RELAY RECORDS.

LPHD1.Sim.ctlModel

Range: direct-with-normal-security, sbo-with-normal-security
Default: direct-with-normal-security

This is a command that can be issued via MMS client to enable simulation mode in the relay.

LPHD1.TxGoSim.ctlModel

Range: direct-with-normal-security, sbo-with-normal-security
Default: direct-with-normal-security

This MMS command enables TxGOOSE sim Mode.

The sim attribute is set to TRUE in the published GOOSE frames from the relay so that the UR plays the simulator role during the testing and commissioning phases.

OscRDRE1.RcdTrg.ctlModel

Range: direct-with-normal-security, sbo-with-normal-security
Default: direct-with-normal-security

This setting selects the control model clients must use to successfully control the command FORCE TRIGGER.

OscRDRE1.MemClr.ctlModel

Range: direct-with-normal-security, sbo-with-normal-security
Default: direct-with-normal-security

This setting selects the control model clients must use to successfully control the command CLEAR OSCILLOGRAPHY.

DatLogRDRE1.MemClr.ctlModel

Range: direct-with-normal-security, sbo-with-normal-security
Default: direct-with-normal-security

This setting selects the control model clients must use to successfully control the command CLEAR DATA LOGGER.

CBArc0SCBR1.MemClr.ctlModel

Range: direct-with-normal-security, sbo-with-normal-security
Default: direct-with-normal-security

This setting selects the control model clients must use to successfully control the command CLEAR ARC AMPS 1.

DmdMtrMMTR1.RsStat.ctlModel

Range: direct-with-normal-security, sbo-with-normal-security
Default: direct-with-normal-security

This setting selects the control model clients must use to successfully control the command CLEAR DEMAND.

EnrMtrMMTR1.RsStat.ctlModel

Range: direct-with-normal-security, sbo-with-normal-security

Default: direct-with-normal-security

This setting selects the control model clients must use to successfully control the command CLEAR ENERGY.

GGIO1

GGIO1 is a UR feature that allows up to 128 UR FlexLogic operands to be user-mapped to IEC 61850 information model data attributes.

For the value of a FlexLogic operand to be read via MMS, included in TxGOOSE messages, or included in buffered/unbuffered reports, the value must be assigned to a data attribute. GGIO1 allows those FlexLogic operands that have not yet been factory-assigned to a data attribute to be user-assigned to a generic data attribute, and thus have their values included in IEC 61850 communications.

Navigate to **Settings > Product Setup > Communications > IEC 61850 > GGIO > GGIO1** to access the settings for GGIO1.

Figure 5-36: IEC 61850 GGIO1 panel

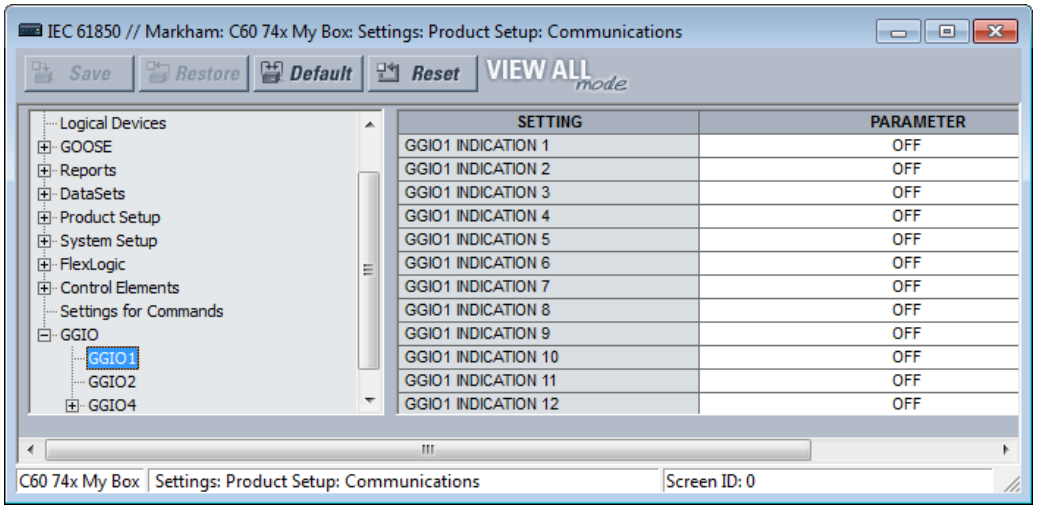

GGIO1 INDICATION 1

Range: any FlexLogic operand

Default: OFF

This setting selects the FlexLogic operand whose value is mapped into the IEC 61850 data attribute <LDName>/GGIO1.Ind001.stVal. See the FlexLogic section in this chapter for a list of FlexLogic operands.

GGIO1 INDICATION 2

Range: any FlexLogic operand

Default: OFF

Selects the FlexLogic operand mapped to <LDName>/GGIO1.Ind002.stVal, and so on.

GGIO2

Virtual Inputs are controllable FlexLogic operands that can be controlled via IEC 61850 commands to GGIO2, by DNP, by Modbus, and by the UR front panel. The settings related to these IEC 61850 commands are described here.

Navigate to **Settings > Product Setup > Communications > IEC 61850 > GGIO > GGIO2** to access the settings that configure the IEC 61850 protocol interface for Virtual Input commands.

Figure 5-37: GGIO2 panel

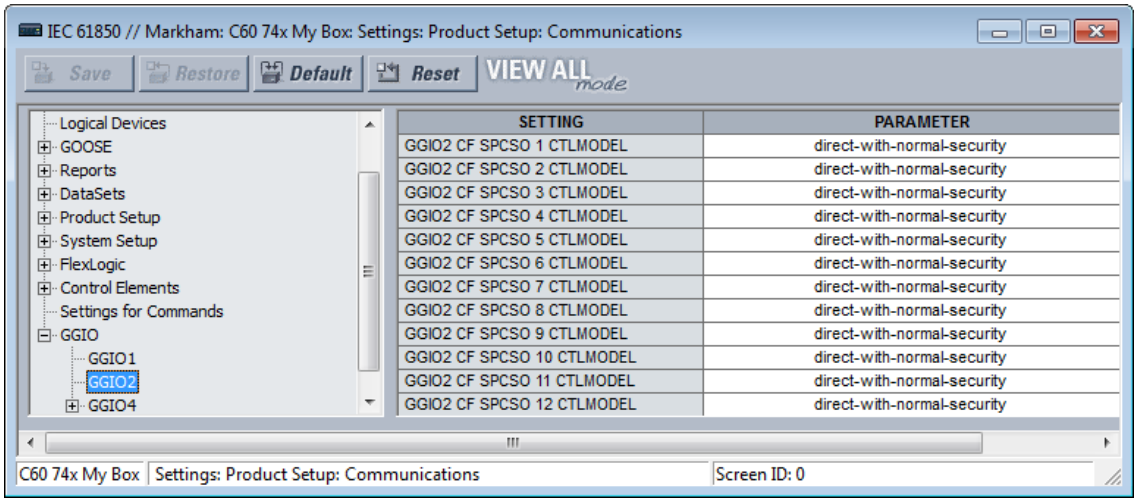

GGIO2 CF SPCSO 1 CTLMODEL

Range: status-only, direct-with-normal-security, sbo-with-normal-security
Default: direct-with-normal-security

This setting selects the control model clients must use to successfully control Virtual Input 1. "sbo" here is select-before-operate.

GGIO2 CF SPCSO 2 CTLMODEL

Range: status-only, direct-with-normal-security, sbo-with-normal-security
Default: direct-with-normal-security

Selects the control model for Virtual Input 2, and so on.

GGIO4

GGIO4 is a UR feature that allows up to 32 UR FlexAnalog operands to be user-mapped to an IEC 61850 information model data attribute.

For the value of a FlexAnalog operand to be read via MMS, included in TxGOOSE messages, or included in buffered/unbuffered reports, the value must be assigned to a data attribute. GGIO4 allows those FlexAnalog operands that have not yet been factory-assigned to a data attribute to be user-assigned to a generic data attribute, and thus have their values included in IEC 61850 communications.

Navigate to **Settings > Product Setup > Communications > IEC 61850 > GGIO > GGIO4 > GGIO4.AnIn1** to access the settings for the first GGIO4 value. The settings and functionality for the others are similar.

Figure 5-38: GGIO4 panel

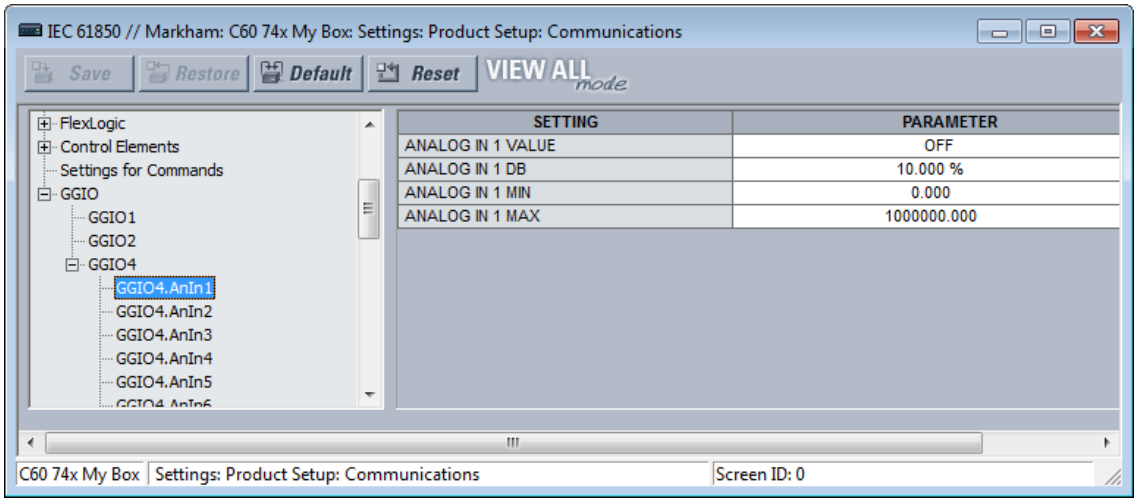

ANALOG IN 1 VALUE

Range: any FlexAnalog operand
Default: OFF

This setting selects the FlexAnalog operand whose value is mapped into the IEC 61850 data attribute <LDName>/GGIO4.AnIn01.instMag.f. The value of the FlexAnalog operand is converted automatically to the format and scaling required by the standard, that is to say primary amperes, primary volts, and so on. See Appendix A for a list of FlexAnalog operands.

ANALOG IN 1 DB

Range: 0.000 to 100.000% in steps of 0.001
Default: 0.000%

This setting specifies the deadband for the **ANALOG IN 1 VALUE**. The deadband is used to determine when to update the deadbanded magnitude from the instantaneous magnitude. The deadband is a percentage of the difference between the "max." and "min." values. Here, the "max." and "min." are as specified by the settings **ANALOG IN 1 MAX** and **ANALOG IN 1 MIN**.

See the Deadband Settings section earlier for a description of deadbanded values.

ANALOG IN 1 MIN

Range: -1000000000.000 to 1000000000.000 in steps of 0.001
Default: 0.000

This setting specifies the "min." value used in deadband calculations. The scaling of this setting is the same as used by <LDName>/GGIO4.AnIn01.instMag.f. This setting is stored as an IEEE 754 / IEC 60559 floating point number. Because of the large range of this setting, not all possible values can be stored. Some values are rounded to the closest possible floating point number.

ANALOG IN 1 MAX

Range: -1000000000.000 to 1000000000.000 in steps of 0.001
Default: 1000000.000

This setting specifies the "max." value used in deadband calculations. The scaling of this setting is the same as used by <LDName>/GGIO4.AnIn01.instMag.f. This setting is stored as an IEEE 754 / IEC 60559 floating point number. Because of the large range of this setting, not all possible values can be stored. Some values are rounded to the closest possible floating point number.

File transfer by IEC 61850

The B30 supports file transfer by IEC 61850. The approach is as follows, using the SISCO AX-S4 61850 client software as an example.

1. In the AX-S4 61850 Explorer window, click the **Tools** menu and access the SISCO File Transfer Utility.
2. Select the **Remote AR Name** from the drop-down list. Available files appear in the **File Specification** area on the right side of the window.
3. With the **Copy** option active, select a file to transfer and click the **Go** button. The file is copied and displays in the **Local** list on the left side of the window.
4. Repeat the process to transfer any other files.

Figure 5-39: File transfer by IEC 61850

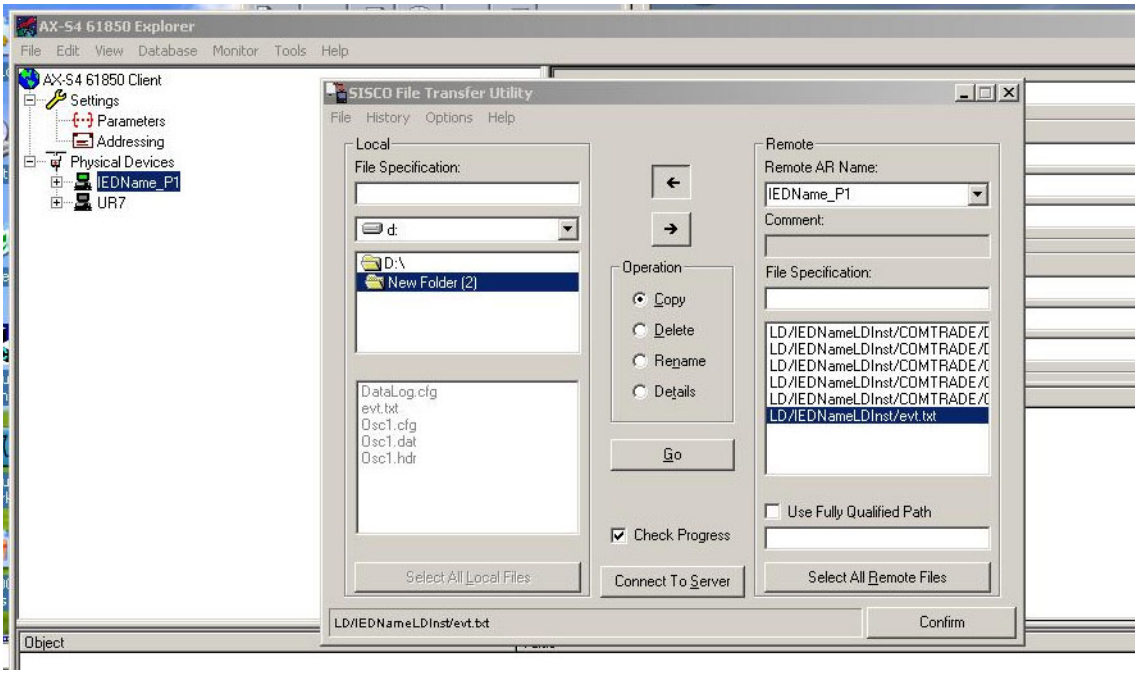

5.3.4.13 Web server HTTP protocol

SETTINGS ⇨ PRODUCT SETUP ⇨⇩ COMMUNICATIONS ⇨⇩ WEB SERVER HTTP PROTOCOL

■ **WEB SERVER** ■ **HTTP PROTOCOL**	⇔	**HTTP TCP PORT NUMBER(80): 80**	Range: 0 to 65535 in steps of 1

The B30 contains an embedded web server and can display pages in a web browser. The web pages are organized as a series of menus that can be accessed starting at the B30 "Main Menu." Web pages are read-only and are available showing DNP and IEC 60870-5-104 points lists, Modbus registers, event records, fault reports, and so on. First connect the B30 and a computer to an Ethernet network, then enter the IP address of the B30 Ethernet port in a web browser.

To close the port, set the port number to 0.

Any change takes effect when the B30 is restarted.

Figure 5-40: Example of UR web page showing event records

GE Multilin

C60 Breaker Relay
Revision 7.31

Relay Name: **Relay-1**
IP Address: **10.14.22.72**

UR

Event Recorder: Last 10 Events

Click Here For The Main Menu

Event Number	Time and Date	Event Cause
214	Nov 04 2014 14:02:56.062087	PROTOTYPE FIRMWARE
213	Nov 04 2014 14:02:56.062087	POWER ON
212	Nov 03 2014 14:00:20.364906	POWER OFF
211	Nov 03 2014 13:55:15.061866	PROTOTYPE FIRMWARE
210	Nov 03 2014 13:55:15.061866	POWER ON
209	Nov 03 2014 13:10:59.733179	POWER OFF
208	Nov 03 2014 13:06:11.062104	PROTOTYPE FIRMWARE
207	Nov 03 2014 13:06:11.062104	POWER ON
206	Oct 31 2014 10:07:25.078203	POWER OFF
205	Oct 31 2014 10:00:44.062027	PROTOTYPE FIRMWARE

NOTE

Do not set more than one protocol to the same TCP/UDP port number, as this results in unreliable operation of those protocols.

5

5.3.4.14 TFTP protocol

SETTINGS ⇨ PRODUCT SETUP ⇨⇩ COMMUNICATIONS ⇨⇩ TFTP PROTOCOL

■ TFTP PROTOCOL ■	⇔	TFTP MAIN UDP PORT NUMBER(69): 69	Range: 0 to 65535 in steps of 1
	⇩	TFTP DATA UDP PORT 1 NUMBER: 0	Range: 0 to 65535 in steps of 1
	⇩	TFTP DATA UDP PORT 2 NUMBER: 0	Range: 0 to 65535 in steps of 1

The Trivial File Transfer Protocol (TFTP) can be used to transfer files from the B30 over a network. The B30 operates as a TFTP server. TFTP client software is available from various sources, including Microsoft Windows NT. The dir.txt file obtained from the B30 contains a list and description of all available files, for example event records and oscillography.

The "put" function is not for security reasons. You can enter a "get" command but not a "put" command.

TFTP MAIN UDP PORT NUMBER — To close the port, set the port number to 0. Any change takes effect when the B30 is restarted.

NOTE

Do not set more than one protocol to the same TCP/UDP port number, as this results in unreliable operation of those protocols.

5.3.4.15 IEC 60870-5-104 protocol

SETTINGS ⇨ PRODUCT SETUP ⇨⇩ COMMUNICATIONS ⇨⇩ IEC 60870-5-104 PROTOCOL

■ IEC 60870-5-104 ■ PROTOCOL	⇔	IEC TCP PORT NUMBER: 2404	Range: 0 to 65535 in steps of 1
	⇩	■ IEC NETWORK ■ CLIENT ADDRESSES	See below

⇳	**IEC COMMON ADDRESS OF ASDU: 0**	Range: 0 to 65535 in steps of 1
⇳	**IEC CYCLIC DATA PERIOD: 60 s**	Range: 1 to 65535 s in steps of 1
⇳	**IEC CURRENT DEFAULT THRESHOLD: 30000**	Range: 0 to 65535 in steps of 1
⇳	**IEC VOLTAGE DEFAULT THRESHOLD: 30000**	Range: 0 to 65535 in steps of 1
⇳	**IEC POWER DEFAULT THRESHOLD: 30000**	Range: 0 to 65535 in steps of 1
⇳	**IEC ENERGY DEFAULT THRESHOLD: 30000**	Range: 0 to 65535 in steps of 1
⇳	**IEC PF DEFAULT THRESHOLD: 1.00**	Range: 0.00 to 1.00
⇳	**IEC OTHER DEFAULT THRESHOLD: 30000**	Range: 0 to 65535 in steps of 1
⇧	**IEC REDUNDANCY ENABLED: No**	Range: No, Yes

IEC 60870-5-104 is a transmission protocol for network access, specifically for communication between a control station and substation over a TCP/IP network.

5

The B30 supports the IEC 60870-5-104 protocol. This protocol is enabled when the **SETTINGS ⇨ PRODUCT SETUP ⇨⇩ COMMUNICATIONS ⇨ PROTOCOL** setting is set to IEC 60870-5-104. The B30 can be used as an IEC 60870-5-104 slave device connected to a maximum of two masters (usually either an RTU or a SCADA master station). Since the B30 maintains two sets of IEC 60870-5-104 data change buffers, ideally no more than two masters actively communicate with the B30 at one time.

The **IEC ------- DEFAULT THRESHOLD** settings are used to determine when to trigger spontaneous responses containing M_ME_NC_1 analog data. These settings group the B30 analog data into types: current, voltage, power, energy, and other. Each setting represents the default threshold value for all M_ME_NC_1 analog points of that type. For example, to trigger spontaneous responses from the B30 when any current values change by 15 A, the **IEC CURRENT DEFAULT THRESHOLD** setting is set to 15. Note that these settings are the default values of the deadbands. P_ME_NC_1 (parameter of measured value, short floating point value) points can be used to change threshold values, from the default, for each individual M_ME_NC_1 analog point. Whenever power is removed and re-applied to the B30, the default thresholds are in effect.

The **IEC REDUNDANCY** setting decides whether multiple client connections are accepted or not. If redundancy is set to Yes, two simultaneous connections can be active at any given time.

IEC TCP PORT NUMBER — To close the port, set the port number to 0. Any change takes effect when the B30 is restarted.

IEC COMMON ADDRESS OF ASDU — The change takes effect when the B30 is restarted.

IEC CYCLIC DATA PERIOD — The change takes effect when the B30 is restarted.

NOTE

B30 devices without CT and VT inputs do not support power metering or energy metering. As such, the **IEC POWER DEFAULT THRESHOLD** and the **IEC ENERGY DEFAULT THRESHOLD** setting do not apply to B30 devices without CT and VT inputs.

NOTE

Do not set more than one protocol to the same TCP/UDP port number, as this results in unreliable operation of those protocols.

SETTINGS ⇨ PRODUCT SETUP ⇨⇩ COMMUNICATIONS ⇨⇩ IEC 60870-5-104 PROTOCOL ⇨⇩ IEC NETWORK CLIENT ADDRESSES

■ IEC NETWORK ■ CLIENT ADDRESSES	⇔	CLIENT ADDRESS 1: 0.0.0.0	Range: standard IPV4 address format
		⇩	
	⇧	CLIENT ADDRESS 5: 0.0.0.0	Range: standard IPV4 address format

The B30 can specify a maximum of five clients for its IEC 104 connections. These are IP addresses for the controllers to which the B30 can connect. A maximum of two simultaneous connections are supported at any given time.

5.3.4.16 EGD protocol

SETTINGS ⇨ PRODUCT SETUP ⇨⇩ COMMUNICATIONS ⇨⇩ EGD PROTOCOL

■ EGD PROTOCOL ■	⇔	■ FAST PROD EXCH 1 ■ CONFIGURATION	See below
	⇩	■ SLOW PROD EXCH 1 ■ CONFIGURATION	See below
	⇧	■ SLOW PROD EXCH 2 ■ CONFIGURATION	See below

SOFTWARE OPTION

The B30 is provided with optional Ethernet Global Data (EGD) communications capability. This feature is specified as a software option at the time of ordering. See the Order Codes section in chapter 2 for details.

Ethernet Global Data (EGD) is a suite of protocols used for the real-time transfer of data for display and control purposes. The relay can be configured to 'produce' EGD data exchanges, and other devices can be configured to 'consume' EGD data exchanges. The number of produced exchanges (up to three), the data items in each exchange (up to 50), and the exchange production rate can be configured.

The relay supports one fast EGD exchange and two slow EGD exchanges. There are 20 data items in the fast-produced EGD exchange and 50 data items in each slow-produced exchange.

EGD cannot be used to transfer data between UR series relays. The relay supports EGD production only. An EGD exchange is not be transmitted unless the destination address is non-zero, and at least the first data item address is set to a valid Modbus register address. The default setting value of "0" is considered invalid.

Fast exchanges (50 to 1000 ms) are generally used in control schemes. The B30 has one fast exchange (exchange 1) and two slow exchanges (exchange 2 and 3).

The settings menu for the fast EGD exchange follows.

SETTINGS ⇨ PRODUCT SETUP ⇨⇩ COMMUNICATIONS ⇨⇩ EGD PROTOCOL⇨ FAST PROD EXCH 1 CONFIGURATION

■ FAST PROD EXCH 1 ■ CONFIGURATION	⇔	EXCH 1 FUNCTION: Disable	Range: Disable, Enable
	⇩	EXCH 1 DESTINATION: 0.0.0.0	Range: standard IP address
	⇩	EXCH 1 DATA RATE: 1000 ms	Range: 50 to 1000 ms in steps of 1
	⇩	EXCH 1 DATA ITEM 1: 0	Range: 0 to 65535 in steps of 1 (Modbus register address range)
		⇩	
	⇧	EXCH 1 DATA ITEM 20: 0	Range: 0 to 65535 in steps of 1 (Modbus register address range)

The settings menu for the slow EGD exchanges follows.

SETTINGS ⇨ PRODUCT SETUP ⇨⇩ COMMUNICATIONS ⇨⇩ EGD PROTOCOL⇨ SLOW PROD EXCH 1(2) CONFIGURATION

■ SLOW PROD EXCH 1 ■ CONFIGURATION	⇔	EXCH 1 FUNCTION: Disable	Range: Disable, Enable
	⇩	EXCH 1 DESTINATION: 0.0.0.0	Range: standard IP address
	⇩	EXCH 1 DATA RATE: 1000 ms	Range: 50 to 1000 ms in steps of 1
	⇩	EXCH 1 DATA ITEM 1: 0	Range: 0 to 65535 in steps of 1 (Modbus register address range)
		⇩	
	⇧	EXCH 1 DATA ITEM 50: 0	Range: 0 to 65535 in steps of 1 (Modbus register address range)

Slow EGD exchanges (500 to 1000 ms) are generally used for the transfer and display of data items. The settings for the fast and slow exchanges are as follows.

EXCH 1 DESTINATION — This setting specifies the destination IP address of the produced EGD exchange. This is usually unicast or broadcast.

EXCH 1 DATA RATE — This setting specifies the rate at which this EGD exchange is transmitted. If the setting is 50 ms, the exchange data is updated and sent once every 50 ms. If the setting is 1000 ms, the exchange data is updated and sent once per second. EGD exchange 1 has a setting range of 50 to 1000 ms. Exchanges 2 and 3 have a setting range of 500 to 1000 ms.

EXCH 1 DATA ITEM 1 to 20/50 — These settings specify the data items that are part of this EGD exchange. Almost any data from the B30 memory map can be configured to be included in an EGD exchange. The settings are the starting Modbus register address for the data item in decimal format. See the Modbus memory map in the UR Series Communications Guide for details. The Modbus memory map display shows addresses in hexadecimal format. Convert these hex values to decimal format before entering them as values for these setpoints.

To select a data item to be part of an exchange, it is only necessary to choose the starting Modbus address of the item. That is, for items occupying more than one Modbus register (for example, 32 bit integers and floating point values), only the first Modbus address is required. The EGD exchange configured with these settings contains the data items up to the first setting that contains a Modbus address with no data, or 0. That is, if the first three settings contain valid Modbus addresses and the fourth is 0, the produced EGD exchange contains three data items.

5.3.4.17 IEC 60870-5-103 protocol

SETTINGS ⇨ PRODUCT SETUP ⇨⇩ COMMUNICATIONS ⇨⇩ IEC 60870-5-103

■ IEC103 ■ PROTOCOL	⇔	IEC103 COMMON ADDRESS OF ASDU: 0	Range: 0 to 254 in steps of 1
	⇩	IEC103 SYNC TIMEOUT: 1	Range: 1 to 1440 min in steps of 1
	⇩	■ IEC103 INPUTS ■ BINARY	See below
	⇩	■ IEC103 INPUTS ■ MEASURANDS	See below
	⇧	■ IEC103 COMMANDS ■	See below

SOFTWARE OPTION

The B30 is provided with optional IEC 60870-5-103 communications capability. This feature is specified as a software option at the time of ordering. See the Order Codes section in chapter 2 for details.

IEC 60870-5-103 is a companion standard to the IEC 60870-5 suite of standards for transmission protocols. It defines messages and procedures for interoperability between protection equipment and devices of a control system in a substation for communicating on a serial line.

The IEC 60870-5-103 protocol is enabled when the **SETTINGS ⇨ PRODUCT SETUP ⇨⇩ COMMUNICATIONS ⇨ PROTOCOL** setting is set to IEC 60870-5-103.

The IEC 60870-5-103 is an unbalanced (master-slave) protocol for coded-bit serial communication, exchanging information with a control system. In the context of this protocol, the protection equipment is the slave and the control system is the master. The communication is based on a point-to-point principle. The master must be able to interpret the IEC 60870-5-103 communication messages.

The UR implementation of IEC 60870-5-103 consists of the following functions:

- Report binary inputs
- Report analog values (measurands)
- Commands
- Time synchronization

The RS485 port supports IEC 60870-5-103.

The UR Family Communications Guide contains more information on the protocol.

IEC103 COMMON ADDRESS OF ASDU — This setting uniquely defines this B30 on the serial line. Select an ID between 0 and 254. This ID does not need to be in sequential order for all stations that communicate with a controller, but it is recommended. Note that RS485 only allows a maximum of 32 slave stations on a communication line, so the entire range of 254 addresses is never exhausted.

IEC103 SYNC TIMEOUT — This setting defines the time that the B30 waits for a synchronization message. The B30 synchronizes its clock using all available sources, with the source synching more frequently overwriting the time of the other sources. Since the synchronization message received from the IEC 60870-5-103 master is less frequent than IRIG-B, PTP, or SNTP, its time is overwritten by these three sources, if any of them is active. If the synchronization timeout occurs and none of IRIG-B, PTP, or SNTP is active, the B30 sets the invalid bit in the time stamp of a time-tagged message.

The settings for the remaining menus are outlined as follows.

SETTINGS ⇨ PRODUCT SETUP ⇨⇩ COMMUNICATIONS ⇨⇩ IEC 60870-5-103 ⇨⇩ IEC103 INPUTS BINARY

■ IEC103 INPUTS ■ BINARY	⇔	■ POINT 0 ■	See below
	⇩	■ POINT 1 ■	See below
		⇩	
	⇧	■ POINT 95 ■	See below

■ POINT 0 ■	⇔	POINT 0 FUN 0	Range: 0 to 255 in steps of 1
	⇩	POINT 0 INF 0	Range: 0 to 255 in steps of 1
	⇧	POINT 0 Input Off	Range: FlexLogic operand
		⇩	
■ POINT 95 ■	⇔	POINT 95 FUN 0	Range: 0 to 255 in steps of 1
	⇩	POINT 95 INF 0	Range: 0 to 255 in steps of 1

⇧	**POINT 95 Input Off**	Range: FlexLogic operand

The binary input points are mapped using elements from a list of possible FlexLogic operands. A maximum of 96 binary inputs (points) can be mapped this way.

The IEC 60870-5-103 point list always starts with point 0 and ends at the first "Off" value. Since the IEC 60870-5-103 point list must be in a continuous block, any points assigned after the first "Off" point are ignored.

For each defined point, set appropriate values for the Function Type (FUN) and Information Number (INF), which form the Information Object Identifier field of the ASDU, as defined in IEC 60870-5-103.

The binary input points are sent as Class 1 data. They are sent either as a response to a general interrogation received from the controller or reported spontaneously. Spontaneous transmission occurs as a response to cyclic Class 2 requests. If the B30 wants to transmit Class 1 data at that time, it demands access for Class 1 data transmission (ACD=1 in the control field of the response).

For any change to take effect, restart the relay.

SETTINGS ⇨ PRODUCT SETUP ⇨⇩ COMMUNICATIONS ⇨⇩ IEC 60870-5-103 ⇨⇩ IEC103 INPUTS MEASURANDS

■ **IEC103 INPUTS MEASURANDS** ■	⇔	■ **ASDU 1** ■	See below
		⇩	
	⇧	■ **ASDU 4** ■	

■ **ASDU 1** ■	⇔	**ASDU 1 TYP: 9**	Range: 3 or 9
	⇧⇩	**ASDU 1 FUN: 0**	Range: 0 to 255 in steps of 1
	⇧⇩	**ASDU 1 INF: 0**	Range: 0 to 255 in steps of 1
	⇧⇩	**ASDU 1 SCAN TOUT: 0**	Range: 0 to 1000 s in steps of 1
	⇧⇩	**ASDU 1 ANALOG 1 Off**	Range: FlexAnalog parameter
	⇧⇩	**ASDU 1 ANALOG 1 FACTOR: 1.000**	Range: 0.000 to 65.535 in steps of 0.001
	⇧⇩	**ASDU 1 ANALOG 1 OFFSET: 0**	Range: -32768 to 32767 in steps of 1
		⇩	
	⇧⇩	**ASDU 1 ANALOG 9 Off**	Range: FlexAnalog parameter
	⇧⇩	**ASDU 1 ANALOG 9 FACTOR: 1.000**	Range: 0.000 to 65.535 in steps of 0.001
	⇧⇩	**ASDU 1 ANALOG 9 OFFSET: 0**	Range: -32768 to 32767 in steps of 1
		⇩	
■ **ASDU 4** ■	⇧⇩	**ASDU 4 TYP: 9**	Range: 3 or 9
	⇧⇩	**ASDU 4 FUN: 0**	Range: 0 to 255 in steps of 1

⇕	**ASDU 4 INF: 0**	Range: 0 to 255 in steps of 1
⇕	**ASDU 4 SCAN TOUT: 0**	Range: 0 to 1000 s in steps of 1
⇕	**ASDU 4 ANALOG 1 Off**	Range: FlexAnalog parameter
⇕	**ASDU 4 ANALOG 1 FACTOR: 1.000**	Range: 0.000 to 65.535 in steps of 0.001
⇕	**ASDU 4 ANALOG 1 OFFSET: 0**	Range: -32768 to 32767 in steps of 1
	⇩	
⇕	**ASDU 4 ANALOG 9 Off**	Range: FlexAnalog parameter
⇕	**ASDU 4 ANALOG 9 FACTOR: 1.000**	Range: 0.000 to 65.535 in steps of 0.001
⇧	**ASDU 4 ANALOG 9 OFFSET: 0**	Range: -32768 to 32767 in steps of 1

The configuration menu allows a maximum of four ASDUs containing measurands.

Measurands are sent as a response to Class 2 requests, which are cyclic requests coming from the master.

TYPE IDENTIFICATION (TYP) — The configuration field TYP indicates how many measurands are present in the corresponding ASDU. Each ASDU can take either 4 or 9 measurands maximum, depending on the type identification (3 respectively 9). For any change to take effect, restart the relay.

FUNCTION TYPE (FUN) and **INFORMATION NUMBER (INF)** — These two fields form the Information Object Identifier of the ASDU as defined in IEC 60870-103. For any change to take effect, restart the relay.

SCAN TIMEOUT (SCAN TOUT) — This is the cyclic period used by the B30 to decide when a measurand ASDU is included in a response. The measurand is sent as response to a Class 2 request when the corresponding timeout expires. The default value 0 means 500 ms.

ANALOG # — This field contains the actual measurand to be sent in the response to the master. The measurands can be mapped using elements from a list of FlexAnalog operands. The measurands sent are voltage, current, power, power factor, and frequency. If any other FlexAnalog is chosen, the B30 sends 0 instead of its value. Note that the power is transmitted in KW, not W. Measurands are transmitted as ASDU 3 or ASDU 9 (type identification value set to measurands I, respectively measurands II).

Each IEC 60870-5-103 measurands list ends at the first unconfigured ("Off") value. Any measurand assigned after the first "Off" value is ignored.

At least one measurand per ASDU must be configured in order to configure the following ASDU. For example, the user can configure only one measurand for each ASDU, but the user is not allowed to skip ASDU 2 and configure measurands in ASDU 3.

For any change to take effect, restart the relay.

ANALOG # FACTOR and **OFFSET** — For each measurand included in the ASDU, a factor and offset also can be configured. The factor and offset allow for scaling to be performed on measurands. The final measurement sent to the IEC 60870-103 master is then "a*x + b," where x is the measurand, a is the multiplying factor and b is the offset. The master has to perform the reversed operation in order to retrieve the actual value if such scaling is done. By default a = 1 and b = 0, so no scaling is done if these values are left at their defaults. Examples of when scaling is appropriate are as follows:

- If the measured value contains decimals and it is important to preserve the resolution. Since the format for transmitting the measurand does not permit decimals, a factor a>1 can be applied before transmission. For example, a frequency F=59.9Hz can be transmitted as Ft = 10 * F = 10 * 59.9 = 599. In this case a = 10, b = 0. The master receives 599 and has to divide by 10 to retrieve the real value 59.9.
- If the measured value is larger than what fits in the format defined in IEC 103. The format defined in the standard allows for signed integers up to 4095. By offsetting, unsigned integers up to 4096 + 4095 = 8191 are supported.

Scaling using factors <1 can be required in such cases. The calculation is outlined in the IEC 60870-5-103 chapter of the UR Family Communications Guide. Two examples follow, where you decide factors a and b.

Example 1: Nominal power Pn = 100 MW = 100000 KW (power is transmitted in KW)

Since P can be both positive and negative:

Transmitted power Pt = (4095/(Pn*2.4)) * P = (4095/(100000 * 2.4)) * P

= 0.017 * P

a = 0.017

b = 0

Pt = 0.017 * P

For a max power 100000 KW * 2.4 = 240000 KW, we transmit

Pt = 0.017 * 240000 = 4080

A value above 240 MW is indicated by overflow.

Example 2: Nominal voltage Vn = 500000 V

Since RMS voltage V can be only positive:

Transmitted voltage Vt = (8191/(Vn*2.4)) * V - 4096 =

= (8191/(500000 * 2.4)) * V - 4096 = 0.0068 * V - 4096

a = 0.0068

Since the step is in increments of 0.001, we round it at:

a = 0.006

b = -4096

Vt = 0.006 * V - 4096

For max voltage 500000 V * 2.4 = 1200000 V, we transmit

Vt = 0.006 * 1200000 - 4096 = 7200 - 4096 = 3104

SETTINGS ⇨ PRODUCT SETUP ⇨⇩ COMMUNICATIONS ⇨⇩ IEC 60870-5-103 ⇨⇩ IEC103 COMMANDS

■ IEC103 COMMANDS ■	⇔	■ COMMAND 0 ■	See below
	⇕	■ COMMAND 1 ■	
		⇩	
	⇧	■ COMMAND 31 ■	

■ COMMAND 0 ■	⇔	COMMAND 0 FUN: 0	Range: 0 to 255 in steps of 1
	⇕	COMMAND 0 INF: 0	Range: 0 to 255 in steps of 1
	⇕	COMMAND 0 ON: Off	Range: Virtual input
	⇧	COMMAND 0 OFF: Off	Range: Virtual input
		⇩	
■ COMMAND 31 ■	⇔	COMMAND 31 FUN: 0	Range: 0 to 255 in steps of 1

⇕	**COMMAND 31 INF:** **0**	Range: 0 to 255 in steps of 1
⇕	**COMMAND 31 ON:** **Off**	Range: Virtual input
⇧	**COMMAND 31 OFF:** **Off**	Range: Virtual input

Commands are received as General Command (Type Identification 20). The user can configure the action to perform when an ASDU command comes.

A list of available mappings is provided on the B30. This includes 64 virtual inputs (see the following table). The ON and OFF for the same ASDU command can be mapped to different virtual inputs.

Each command is identified by the unique combination made by the function type (FUN) and information number (INF). If the master sends an ASDU command that does not have the FUN and INF of any configured command, the relay rejects it.

Table 5-12: Commands mapping table

Description	Value
Off	0
Virtual Input 1	1
Virtual Input 2	2
...	...
Virtual Input 64	64

For any change to take effect, restart the relay.

5.3.5 Modbus user map

SETTINGS ⇨ PRODUCT SETUP ⇨⇩ MODBUS USER MAP

■ **MODBUS USER MAP** ■	⇔	**ADDRESS 1: 0** **VALUE: 0**	Range: 0 to 65535 in steps of 1
		⇩	
	⇧	**ADDRESS 256: 0** **VALUE: 0**	Range: 0 to 65535 in steps of 1

The Modbus user map provides read-only access for up to 256 registers. To obtain a memory map value, enter the address in the **ADDRESS** line (converted from hex to decimal format). The corresponding value (if programmed) displays in the **VALUE** line. A value of "0" in subsequent register **ADDRESS** lines automatically returns values for the previous **ADDRESS** lines incremented by 1. An address value of "0" in the initial register means "none" and values of "0" display for all registers. Different **ADDRESS** values can be entered as required in any of the register positions.

The UR Family Communications Guide outlines the Modbus memory map. The map is also viewable in a web browser; enter the IP address of the B30 in a web browser and click the option.

5.3.6 Real-time clock

5.3.6.1 Menu

SETTINGS ⇨ PRODUCT SETUP ⇨⇩ REAL TIME CLOCK

■ **REAL TIME** ■ **CLOCK**	⇔	**SYNCRONIZING SOURCE:** **None**	Range: None, PP/IRIG-B/PTP/Other, IRIG-B/PP/PTP/Other, PP/PTP/IRIG-B/Other
	⇕	**REAL TIME CLOCK** **EVENTS: Disabled**	Range: Enabled, Disabled

⇕	**IRIG-B SIGNAL TYPE:** **None**	Range: None, DC Shift, Amplitude Modulated
⇕	■ **PRECISION TIME** ■ **PROTOCOL (1588)**	See below
⇕	■ **SNTP PROTOCOL** ■	See below
⇧	■ **LOCAL TIME** ■	See below

The relay contains a real time clock (RTC) to create time stamps for communications protocols as well as for historical data, such as event records and oscillography. When the relay restarts, the RTC initializes from an onboard battery-backed clock, which has the same accuracy as an electronic watch, approximately ±1 minute per month (~23 ppm). Once the RTC is synchronized with the Precision Time Protocol (PTP), IRIG-B, or SNTP, its accuracy approaches that of the synchronizing time delivered to the relay. While the RTC is not synchronized via PTP or IRIG-B, or the relay determines that it has an offset possibly greater than 10 µs from the international time standard, the CLOCK UNSYNCHRONIZED FlexLogic operand is activated.

The **SYNCHRONIZING SOURCE** setting displays when the relay includes the IEEE 1588 software option. The setting configures the priority sequence of the time synchronization source, to determine which of the available external time sources to use for time synchronization. A setting of None causes the RTC and the synchrophasor clock to free-run, and the clock can be changed from the front panel or from communications protocols. A setting of PP/IRIG-B/PTP/Other, IRIG-B/PP/PTP/Other, or PP/PTP/IRIG-B/Other causes the relay to track the first source named that is enabled and operational, or free-run if none of these are available. Here, PP means a time source that is strictly compliant with PP, PTP means a time source that is not strictly compliant with PP, and Other means any less precise source (SNTP, IEC 103, IEC 104, Modbus, or DNP). When a time source fails or recovers, the relay automatically transfers synchronization as required by this setting.

When the relay does not have the IEEE 1588 software option and this setting does not display, it uses IRIG-B when enabled and operational, then failing that SNTP when configured and operational, and otherwise it free-runs unless the clock is changed from the front panel or from communications protocols.

Setup for IRIG-B is illustrated in the Installation chapter.

For the Other protocols, whenever a time synchronization message is received through any of the active protocols, the B30 clock updates. However, given that IEC 60870-5-103, IEC 60870-5-104, Modbus, and DNP are low-accuracy time synchronization methods, avoid their use for synchronization when better accuracy time protocols, such as IRIG-B and PTP, are active in the system. If IRIG-B or PTP is used to update the relay clock, the other protocols (such as SNTP) are not allowed to update, even if active.

See the **COMMANDS ⇨ SET DATE AND TIME** menu section of this manual to manually set the RTC.

The **REAL TIME CLOCK EVENTS** setting allows changes to the date and/or time to be captured in the event record. The event records the RTC time before the adjustment. A Date/Time Changed event is generated when:

- The real time clock changed from SNTP/PTP/IRIG-B and the time difference is more than one second
- The real time clock changed from the front panel or via Modbus register. The relay always generates this event regardless of the time difference.
- The Daylight Saving Time (DST) setting gets enabled and the current relay time is already in the DST zone
- The real time clock enters or leaves DST

To enable IRIG-B synchronization, the input **IRIG-B SIGNAL TYPE** must be set to DC Shift or Amplitude Modulated. IRIG-B synchronization can be disabled by making this setting None. When IRIG-B is enabled and active, clock synchronization by communication protocols. (DNP, IEC 60870-5-103, IEC 60870-5-104) is blocked, and clock synchronization from the front panel and over Modbus is always enabled.

To configure and enable PTP and/or SNTP, or to set local time parameters (for example time zone, daylight savings), use the following sections.

5.3.6.2 Precision time protocol (1588)

SETTINGS ⇨ PRODUCT SETUP ⇨⇩ REAL TIME CLOCK ⇨⇩ PRECISION TIME PROTOCOL (1588)

■ PRECISION TIME ■ PROTOCOL (1588)	⇔	STRICT POWER PROFILE: Disabled	Range: Enabled, Disabled
	⇩	PTP DOMAIN NUMBER: 0	Range: 0 to 255
	⇩	PTP VLAN PRIORITY: 4	Range: 0 to 7
	⇩	PTP VLAN ID: 0	Range: 0 to 4095
	⇧	■ PTP PORT 1 ■	See below

SETTINGS ⇨ PRODUCT SETUP ⇨⇩ REAL TIME CLOCK ⇨⇩ PRECISION TIME PROTOCOL (1588) ⇨⇩ PTP PORT 1(3)

■ PTP PORT 1 ■	⇩	PORT 1 PTP FUNCTION: Disabled	Range: Enabled, Disabled
	⇩	PORT 1 PATH DELAY ADDER: 0 ns	Range: 0 to 60000 ns in steps of 1
	⇧	PORT 1 PATH DELAY ASYMMETRY: 0 ns	Range: –1000 to +1000 ns in steps of 1

SOFTWARE OPTION

The B30 is provided with optional Precision Time Protocol capability. This feature is specified as the IEEE 1588 software option at the time of ordering. See the Order Codes section in chapter 2 for details.

The B30 supports the Precision Time Protocol (PTP) specified in IEEE Std 1588 2008 using the Power Profile (PP) specified in IEEE Std C37.238 2011. This enables the relay to synchronize to the international time standard over an Ethernet network that implements PP.

The relay can be configured to operate on some PTP networks that are not strictly PP. Time accuracy can be less than specified for a PP network. Tolerated deviations from strict PP include 1) missing declaration of PP compliance in the messages, 2) connection to a network device that does not support the PTP peer delay mechanism, 3) jitter substantially greater than 1 µs in received event messages, and 4) certain non-compliant announce and sync message update rates.

The relay implements PTP according to IEEE Std 1588 2008 and the equivalent IEC 61588:2009(E), sometimes referred to as version 2 PTP. It does not support the previous version of the standard (version 1).

PTP is a protocol that allows multiple clocks in a network to synchronize with one another. It permits synchronization accuracies better than 1 ns, but this requires that each and every component in the network achieve very high levels of accuracy and a very high baud rate, faster than normally used for relay communications. When operating over a generic Ethernet network, time error can amount to 1 ms or more. PP is a profile of PTP which specifies a limited subset of PTP suitable for use in power system protection, control, automation, and data communication applications, and thereby facilitates interoperability between different vendor's clocks and switches. PP specifies a worst-case delivered time error of less than 1 µs over a 16-hop network.

In a PTP system and in a PP system, the clocks automatically organize themselves into a master-slave synchronization hierarchy with the "best" clock available making itself the "grandmaster" at the top of the hierarchy; all others make themselves "slaves" and track the grandmaster. Typically the grandmaster clock receives its time from GPS satellites or some other link to the international time standard. If the grandmaster fails, the next "best" clock available in the domain assumes the grandmaster role. When a clock on start-up discovers that it is "better" than the present grandmaster, it assumes the grandmaster role and the previous grandmaster reverts to slave. The B30 qualification mechanism accepts a potential master clock as a new grandmaster, when in a four-second interval it has received three announce messages from it, all better than the present grandmaster clock and better than any other announce in this interval.

Time messages issued by the grandmaster are delayed as they pass through the network both due to the finite speed of the signal in the interconnecting fiber or wire, and due to processing delays in the Ethernet switches. Each clock and switch implementing PP measures the propagation delay to each of its PP neighbors, and compensates for these delays in the time received. Each network device implementing PP measures the processing delay it introduces in each time message and compensates for this delay in the time it transmits. As a result, the time delivered to end-devices such as the UR are virtually identical to the grandmaster time. If one of the network devices in the hierarchy does not fully implement PP, the associated propagation delay and/or latency may not be compensated for, and the time received at the end-device can be in error by more than 100 μs.

See the preceding Real Time Clock section for a description of when time values received via PTP are used to update the relay's real time clock.

The following settings are available for configuring the relay for PTP. The PTP menu displays only when the option was purchased.

STRICT POWER PROFILE — Power profile (IEEE Std C37.238 2011) requires that the relay only select a power profile compliant clock as a grandmaster, that the delivered time have worst-case error of ±1 μs, and that the peer delay mechanism be implemented. With the strict power profile setting enabled, the relay only selects as master the clocks displaying the IEEE_C37_238 identification codes. It uses a port only when the peer delay mechanism is operational. With the strict power profile setting disabled, the relay uses clocks without the power profile identification when no power profile clocks are present, and uses ports even if the peer delay mechanism is non-operational. This setting applies to all of the relay's PTP capable ports.

PTP DOMAIN NUMBER — Set this setting to the domain number of the grandmaster-capable clock(s) to be synchronized to. A network can support multiple time distribution domains, each distinguished with a unique domain number. More commonly, there is a single domain using the default domain number zero.

This setting applies to all of the relay's PTP capable ports.

PTP VLAN PRIORITY — This setting selects the value of the priority field in the 802.1Q VLAN tag in request messages issued by the relay's peer delay mechanism. In compliance with PP the default VLAN priority is 4, but it is recommended that it be set to 7 in accordance with PTP. Depending on the characteristics of the device to which the relay is linked directly, VLAN Priority can have no effect.

This setting applies to all of the relay's PTP capable ports.

PTP VLAN ID — This setting selects the value of the ID field in the 802.1Q VLAN tag in request messages issued by the relay's peer delay mechanism. It is provided in compliance with PP. As these messages have a destination address that indicates they are not to be bridged, their VLAN ID serves no function, and so can be left at its default value. Depending on the characteristics of the device to which the relay is linked directly, VLAN ID can have no effect. This setting applies to all of the relay's PTP capable ports.

PORT 1 ... 3 FUNCTION — While this port setting is selected to disabled, PTP is disabled on this port. The relay does not generate or listen to PTP messages on this port.

PORT 1 ... 3 PATH DELAY ADDER — The time delivered by PTP is advanced by the time value in this setting prior to the time being used to synchronize the relay's real time clock. This is to compensate to the extent practical for time delivery delays not compensated for in the network. In a fully compliant PP network, the peer delay and the processing delay mechanisms compensate for all the delays between the grandmaster and the relay. In such networks, make this setting zero.

In networks containing one or more switches and/or clocks that do not implement both of these mechanisms, not all delays are compensated, so the time of message arrival at the relay is later than the time indicated in the message. This setting can be used to approximately compensate for this delay. However, as the relay is not aware of network switching that dynamically changes the amount of uncompensated delay, there is no setting that always and completely corrects for uncompensated delay. A setting can be chosen that reduces the worst-case error to half of the range between minimum and maximum uncompensated delay, if these values are known.

PORT 1 ... 3 PATH DELAY ASSYMMETRY — This setting corresponds to "delayAsymmetry" in PTP, which is used by the peer delay mechanism to compensate for any difference in the propagation delay between the two directions of a link. Except in unusual cases, the two fibers are of essentially identical length and composition, so make this setting zero.

In unusual cases where the length of the link is different in different directions, set this setting to the number of nanoseconds the Ethernet propagation delay to the relay is longer than the mean of path propagation delays to and from the relay. For instance, if it is known say from the physical length of the fibers and the propagation speed in the fibers that the delay from the relay to the Ethernet switch it is connected to is 9000 ns and that the delay from the switch to the relay is 11000 ns, then the mean delay is 10000 ns, and the path delay asymmetry is 11000 - 10000 = +1000 ns.

5.3.6.3 SNTP protocol

SETTINGS ⇨ PRODUCT SETUP ⇨⇩ REAL TIME CLOCK ⇨⇩ SNTP PROTOCOL

■ **SNTP PROTOCOL** ■	⇔	**SNTP FUNCTION:** **Disabled**	Range: Enabled, Disabled
	⇩	**SNTP SERVER IP ADDR:** **0.0.0.0**	Range: standard IP address format
	⇩	**SNTP UDP PORT** **NUMBER: 123**	Range: 1 to 65535 in steps of 1

The B30 supports the Simple Network Time Protocol specified in RFC-2030. With SNTP, the B30 can obtain clock time over an Ethernet network. The B30 acts as an SNTP client to receive time values from an SNTP/NTP server, usually a dedicated product using a GPS receiver. UR family relays support unicast, broadcast, multicast, and anycast SNTP functionality.

The **SNTP FUNCTION** setting enables or disables the SNTP feature on the B30.

To use SNTP in unicast mode, set **SNTP SERVER IP ADDR** to the SNTP/NTP server IP address. Once this address is set and **SNTP FUNCTION** is "Enabled," the B30 attempts to obtain time values from the SNTP/NTP server. Since many time values are obtained and averaged, it generally takes three to four minutes until the B30 clock is closely synchronized with the SNTP/NTP server. It takes up to two minutes for the B30 to signal an SNTP self-test error if the server is offline.

To use SNTP in broadcast mode, set the **SNTP SERVER IP ADDR** setting to "0.0.0.0" and **SNTP FUNCTION** to "Enabled." The B30 then listens to SNTP messages sent to the "all ones" broadcast address for the subnet. The B30 waits up to 18 minutes (>1024 seconds) without receiving an SNTP broadcast message before signaling an SNTP self-test error.

The **SNTP UDP PORT NUMBER** is 123 for normal SNTP operation. The change takes effect when the B30 is restarted.

NOTE

Do not set more than one protocol to the same TCP/UDP port number, as this results in unreliable operation of those protocols.

5.3.6.4 Local time

SETTINGS ⇨ PRODUCT SETUP ⇨⇩ REAL TIME CLOCK ⇨⇩ LOCAL TIME

■ **LOCAL TIME** ■	⇔	**LOCAL TIME OFFSET** **FROM UTC: 0.0 hr**	Range: –24.0 to 24.0 hr in steps of 0.5
	⇩	**DAYLIGHT SAVINGS** **TIME: Disabled**	Range: Disabled, Enabled
	⇩	**DST START MONTH:** **January**	Range: January to December (all months)
	⇩	**DST START DAY:** **Sunday**	Range: Sunday to Saturday (all days of the week)
	⇩	**DST START DAY** **INSTANCE: First**	Range: First, Second, Third, Fourth, Last
	⇩	**DST START HOUR:** **2:00**	Range: 0:00 to 23:00 in steps of one hour
	⇩	**DST STOP MONTH:** **January**	Range: January to December (all months)
	⇩	**DST STOP DAY:** **Sunday**	Range: Sunday to Saturday (all days of the week)

⇕	**DST STOP DAY INSTANCE: First**	Range: First, Second, Third, Fourth, Last
⇧	**DST STOP HOUR: 2:00**	Range: 0:00 to 23:00 in steps of one hour

The B30 maintains two times: local time and Universal Coordinated Time (UTC). Local time can be provided by IRIG-B signals. UTC time is provided by SNTP servers.

The real-time clock (RTC) and time stamps reported in historical records and communication protocols can be incorrect if the Local Time settings are not configured properly.

See the IRIG-B section in the Installation chapter for guidance on these settings when using an IRIG-B source that sets the IRIG-B control bits according to IEEE Std 1344-1995.

LOCAL TIME OFFSET FROM UTC — Used to specify the local time zone offset from UTC (Greenwich Mean Time) in hours. Time zones in the eastern hemisphere have positive values; time zones in the western hemisphere have negative values. A value of zero causes the relay to use UTC for local time. This setting has two uses. When the system RTC is synchronized with a communications protocol providing only local time or it is free-running, the offset setting is used to calculate UTC from the local time these provide. When the RTC is synchronized with a communications protocol providing only UTC (such as PTP or SNTP), the time offset setting is used to determine local time from the UTC provided. PTP ALTERNATE_TIME_OFFSET_INDICATOR TLVs are not used to calculate local time.

DAYLIGHT SAVINGS TIME and **DST** — Can be used to allow the relay to follow the DST rules of the local time zone. Note that when IRIG-B time synchronization is active, the local time in the IRIG-B signal contains any daylight savings time offset and so the DST settings are ignored. Note that the following items do not include the DST: Time of Day Timer Start Time; Time of Day Timer Stop Time; Event Recorder Last Cleared Date; Source x Demand VAR Maximum Date; Source x Demand WATT Maximum Date; Source x Demand VA Maximum Date; Source x Demand Ia Maximum Date; Source x Demand Ib Maximum Date; Source x Demand Ic Maximum Date; PMU x Last Cleared Date; PMU One-Shot Time; Data Logger Newest Time; Data Logger Oldest Time; Oscillography Last Cleared Date; Last Settings Change Date; User Programmable Fault Report Cleared Date; Digital Counter x Frozen Time Stamp; HIZ RMS Capture x Time; and HIZ Capture x Time.

5

5.3.7 User-programmable fault report

SETTINGS ⇨ PRODUCT SETUP ⇨⇩ USER-PROGRAMMABLE FAULT REPORTS ⇨⇩ USER-PROGRAMMABLE FAULT REPORT 1(2)

■ **USER-PROGRAMMABLE** ■ **FAULT REPORT 1**	⇔	**FAULT REPORT 1 FUNCTION: Disabled**	Range: Disabled, Enabled
	⇕	**PRE-FAULT 1 TRIGGER: Off**	Range: FlexLogic operand
	⇕	**FAULT 1 TRIGGER: Off**	Range: FlexLogic operand
	⇕	**FAULT REPORT 1 # 1: Off**	Range: Off, any actual value analog parameter
		⇩	
	⇧	**FAULT REPORT 1 #32: Off**	Range: Off, any actual value analog parameter

When enabled, this function monitors the pre-fault trigger. The pre-fault data are stored in the memory for prospective creation of the fault report on the rising edge of the pre-fault trigger. The element waits for the fault trigger as long as the pre-fault trigger is asserted, but not shorter than 1 second. When the fault trigger occurs, the fault data is stored and the complete report is created. If the fault trigger does not occur within 1 second after the pre-fault trigger drops out, the element resets and no record is created.

The user programmable record contains the following information: the user-programmed relay name, detailed firmware revision (x.xx, for example) and relay model (B30), the date and time of trigger, the name of pre-fault trigger (a specific FlexLogic operand), the name of fault trigger (a specific FlexLogic operand), the active setting group at pre-fault trigger, the active setting group at fault trigger, pre-fault values of all programmed analog channels (one cycle before pre-fault trigger), and fault values of all programmed analog channels (at the fault trigger).

Each fault report is stored as a file to a maximum capacity of ten files. An eleventh trigger overwrites the oldest file. The EnerVista software is required to view all captured data. A FAULT RPT TRIG event is automatically created when the report is triggered.

The relay includes two user-programmable fault reports to enable capture of two types of trips (for example, trip from thermal protection with the report configured to include temperatures, and short-circuit trip with the report configured to include voltages and currents). Both reports feed the same report file queue.

The last record is available as individual data items via communications protocols.

PRE-FAULT 1 TRIGGER — Specifies the FlexLogic operand to capture the pre-fault data. The rising edge of this operand stores one cycle-old data for subsequent reporting. The element waits for the fault trigger to actually create a record as long as the operand selected as **PRE-FAULT 1 TRIGGER** is "On." If the operand remains "Off" for 1 second, the element resets and no record is created.

FAULT 1 TRIGGER — Specifies the FlexLogic operand to capture the fault data. The rising edge of this operand stores the data as fault data and results in a new report. The trigger (not the pre-fault trigger) controls the date and time of the report.

FAULT REPORT 1 # 1 to **FAULT REPORT 1 #32** — These settings specify an actual value such as voltage or current magnitude, true RMS, phase angle, frequency, temperature, and so on, to be stored when the report is created. Up to 32 channels can be configured. Two reports are configurable to cope with variety of trip conditions and items of interest.

5.3.8 Oscillography

5.3.8.1 Menu

SETTINGS ⇨ PRODUCT SETUP ⇨⇩ OSCILLOGRAPHY

■ **OSCILLOGRAPHY** ■	⇔	**NUMBER OF RECORDS: 15**	Range: 3 to 64 in steps of 1
	⇩	**TRIGGER MODE: Automatic Overwrite**	Range: Automatic Overwrite, Protected
	⇩	**TRIGGER POSITION: 50%**	Range: 0 to 100% in steps of 1
	⇩	**TRIGGER SOURCE: Off**	Range: FlexLogic operand
	⇩	**AC INPUT WAVEFORMS: 16 samples/cycle**	Range: Off; 8, 16, 32, 64 samples/cycle
	⇩	■ **DIGITAL CHANNELS** ■	See below
	⇧	■ **ANALOG CHANNELS** ■	See below

Oscillography records contain waveforms captured at the sampling rate as well as other relay data at the point of trigger. Oscillography records are triggered by a programmable FlexLogic operand. Multiple oscillography records can be captured simultaneously.

The **NUMBER OF RECORDS** is selectable, but the number of cycles captured in a single record varies considerably based on other factors, such as sample rate and the number of operational modules. There is a fixed amount of data storage for oscillography; the more data captured, the less the number of cycles captured per record. See the **ACTUAL VALUES ⇨⇩ RECORDS ⇨⇩ OSCILLOGRAPHY** menu to view the number of cycles captured per record. The following table provides sample configurations with corresponding cycles/record. The minimum number of oscillographic records is three.

Table 5-13: Oscillography cycles/record example

Records	CT/VTs	Sample rate	Digital channels	Analog channels	Cycles per record
3	1	32	32	16	2399
3	1	64	32	16	1450
16	1	32	32	16	666
16	1	64	32	16	402
32	1	32	32	16	352
32	1	64	32	16	213
3	2	32	32	16	1516
3	2	64	32	16	851
16	2	32	32	16	421

TRIGGER MODE — A new record automatically overwrites an older record when **TRIGGER MODE** is set to "Automatic Overwrite."

TRIGGER POSITION — Set this to a percentage of the total buffer size (for example, 10%, 50%, 75%, and so on). A trigger position of 25% consists of 25% pre- and 75% post-trigger data.

TRIGGER SOURCE — Always captured in oscillography and can be any FlexLogic parameter (element state, contact input, virtual output, and so on). The relay sampling rate is 64 samples per cycle.

AC INPUT WAVEFORMS — Determines the sampling rate at which AC input signals (that is, current and voltage) are stored. Reducing the sampling rate allows longer records to be stored. This setting has no effect on the internal sampling rate of the relay, which is always 64 samples per cycle. That is, it has no effect on the fundamental calculations of the device.

5

NOTE

When changes are made to the oscillography settings, all existing oscillography records are cleared.

5.3.8.2 Digital channels

SETTINGS ⇨ PRODUCT SETUP ⇨⇩ OSCILLOGRAPHY ⇨⇩ DIGITAL CHANNELS

■ DIGITAL CHANNELS ■	⇔	DIGITAL CHANNEL 1: Off	Range: FlexLogic operand
		⇩	
	⇧	DIGITAL CHANNEL 63: Off	Range: FlexLogic operand

DIGITAL 1(63) CHANNEL — This setting selects the FlexLogic operand state recorded in an oscillography trace. The length of each oscillography trace depends in part on the number of parameters selected here. Parameters set to "Off" are ignored.

To populate quickly the rows in the Offline Window, use Ctrl C/V to copy/paste, or click then double-click a row to display a quick selection window.

Figure 5-41: Quick selection window

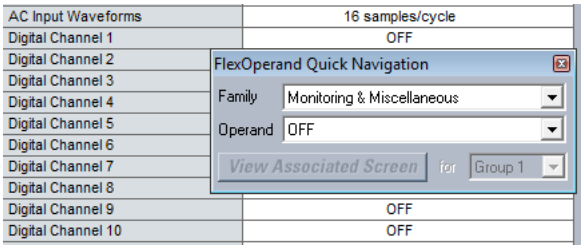

5.3.8.3 Analog channels

SETTINGS ⇨ PRODUCT SETUP ⇨⇩ OSCILLOGRAPHY ⇨⇩ ANALOG CHANNELS

■ ANALOG CHANNELS ■	⇔	ANALOG CHANNEL 1: Off	Range: Off, any FlexAnalog/actual value parameter See Appendix A for list
		⇩	
	⇧	ANALOG CHANNEL 16: Off	Range: Off, any FlexAnalog/actual value parameter See Appendix A for list

These settings select the metering actual value recorded in an oscillography trace. The length of each oscillography trace depends in part on the number of parameters selected here. Parameters set to "Off" are ignored. The parameters available in a given relay depend on

- the type of relay,
- the type and number of CT/VT hardware modules installed, and
- the type and number of analog input hardware modules installed

A list of all possible analog metering actual value parameters is presented in Appendix A: FlexAnalog Parameters. The parameter index number shown in any of the tables is used to expedite the selection of the parameter on the relay display. It can be time-consuming to scan through the list of parameters via the relay keypad and display — entering this number via the relay keypad causes the corresponding parameter to display.

All eight CT/VT module channels are stored in the oscillography file. The CT/VT module channels are named as follows:

<slot_letter><terminal_number>—<I or *V><phase A, B*, or *C*, or *4th input>*

The fourth current input in a bank is called IG, and the fourth voltage input in a bank is called VX. For example, F2-IB designates the IB signal on terminal 2 of the CT/VT module in slot F.

If there are no CT/VT modules and analog input modules, no analog traces appear in the file; only the digital traces appear.

5

5.3.9 Data logger

SETTINGS ⇨⇩ PRODUCT SETUP ⇨⇩ DATA LOGGER

■ DATA LOGGER ■	⇔	DATA LOGGER MODE: Continuous	Range: Continuous, Trigger
	⇩⇧	DATA LOGGER TRIGGER: Off	Range: FlexLogic operand
	⇩⇧	DATA LOGGER RATE: 60000 msec	Range: 15 to 3600000 ms in steps of 1
	⇩⇧	DATA LOGGER CHNL 1: Off	Range: Off, any FlexAnalog/actual value parameter See Appendix A for list
		⇩	
	⇩⇧	DATA LOGGER CHNL 16: Off	Range: Off, any FlexAnalog/actual value parameter See Appendix A for list
	⇧	DATA LOGGER CONFIG: 0 CHNL x 0.0 DAYS	Range: Not applicable - shows computed data only

The data logger samples and records up to 16 analog parameters at a user-defined sampling rate. This recorded data can be downloaded to EnerVista UR Setup and displayed with parameters on the vertical axis and time on the horizontal axis. All data is stored in non-volatile memory, so the information is retained when power to the relay is lost.

For a fixed sampling rate, the data logger can be configured with a few channels over a long period or a larger number of channels for a shorter period. The relay automatically partitions the available memory between the channels in use. The following table outlines examples of storage capacities for a system frequency of 60 Hz.

Table 5-14: Data logger storage capacity example

Sampling rate	Channels	Days	Storage capacity
15 ms	1	0.1	482 s
	8	0.1	60 s
	9	0.1	54 s
	16	0.1	30 s
1000 ms	1	0.3	32729 s
	8	0.1	4091 s
	9	0.1	3637 s
	16	0.1	2046 s
60000 ms	1	22.7	1963710 s
	8	2.8	245460 s
	9	2.5	218190 s
	16	1.4	127230 s
3600000 ms	1	1362.1	117822600 s
	8	170.2	14727600 s
	9	151.3	13091400 s

NOTE

Changing any setting affecting data logger operation clears data in the log.

5

DATA LOGGER MODE — This setting configures the mode in which the data logger operates. When set to "Continuous," the data logger actively records any configured channels at the rate as defined by the **DATA LOGGER RATE**. The data logger is idle in this mode when no channels are configured. When set to "Trigger," the data logger records any configured channels at the instance of the rising edge of the **DATA LOGGER TRIGGER** source FlexLogic operand. The data logger ignores all subsequent triggers and continues to record data until the active record is full. Once the data logger is full, a CLEAR DATA LOGGER command is required to clear the data logger record before a new record can be started. Performing the CLEAR DATA LOGGER command also stops the current record and resets the data logger to be ready for the next trigger.

DATA LOGGER TRIGGER — This setting selects the signal used to trigger the start of a new data logger record. Any FlexLogic operand can be used as the trigger source. This setting only applies when the mode is set to "Trigger."

DATA LOGGER RATE — This setting selects the time interval at which the actual value data is recorded.

DATA LOGGER CHNL 1(16) — This setting selects the metering actual value that is to be recorded in Channel 1(16) of the data log. The parameters available in a given relay are dependent on: the type of relay, the type and number of CT/VT hardware modules installed, and the type and number of Analog Input hardware modules installed. Upon startup, the relay automatically prepares the parameter list. A list of all possible analog metering actual value parameters is shown in Appendix A: FlexAnalog Parameters. The parameter index number shown in any of the tables is used to expedite the selection of the parameter on the relay display. It can be time-consuming to scan through the list of parameters via the relay keypad/display—entering this number via the relay keypad causes the corresponding parameter to display.

DATA LOGGER CONFIG — This display presents the total amount of time that the Data Logger can record the channels not selected to "Off" without overwriting old data.

5.3.10 Demand

SETTINGS ⇨⇩ PRODUCT SETUTP ⇨⇩ DEMAND

■ **DEMAND** ■	⇔	**CRNT DEMAND METHOD:** **Thermal Exponential**	Range: Thermal Exponential, Block Interval, Rolling Demand
	⇩	**POWER DEMAND METHOD:** **Thermal Exponential**	Range: Thermal Exponential, Block Interval, Rolling Demand

⇕	**DEMAND INTERVAL:** **15 MIN**	Range: 5, 10, 15, 20, 30, 60 minutes
⇧	**DEMAND TRIGGER:** **Off**	Range: FlexLogic operand Note: for calculation using method 2a

The relay measures current demand on each phase, and three-phase demand for real, reactive, and apparent power. Current and Power methods can be chosen separately for the convenience of the user. Settings are provided to allow the user to emulate common electrical utility demand measuring techniques, for statistical or control purposes. If the **CRNT DEMAND METHOD** is set to "Block Interval" and the **DEMAND TRIGGER** is set to "Off," Method 2 is used as follows. If **DEMAND TRIGGER** is assigned to any other FlexLogic operand, Method 2a is used as follows.

The relay can be set to calculate demand by any of the following three methods.

5.3.10.1 Calculation method 1: Thermal exponential

This method emulates the action of an analog peak-recording thermal demand meter. The relay measures the quantity (RMS current, real power, reactive power, or apparent power) on each phase every second and assumes that the circuit quantity remains at this value until updated by the next measurement. It calculates the 'thermal demand equivalent' based on the following equation:

$$d(t) = D(1 - e^{-kt}) \qquad \textbf{Eq. 5-3}$$

where

d = demand value after applying input quantity for time t (in minutes)
D = input quantity (constant)
k = 2.3 / thermal 90% response time

The figure shows the 90% thermal response time characteristic of 15 minutes. A setpoint establishes the time to reach 90% of a steady-state value, just as the response time of an analog instrument. A steady state value applied for twice the response time indicates 99% of the value.

Figure 5-42: Thermal demand characteristic

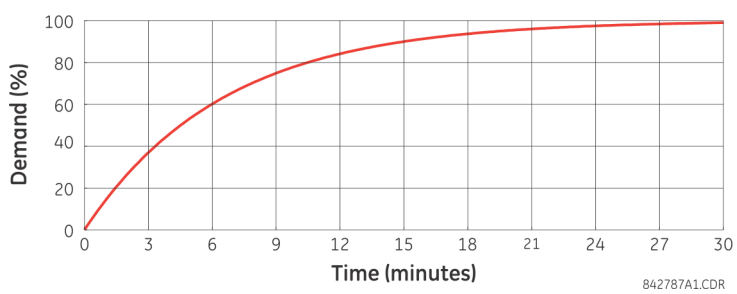

5.3.10.2 Calculation method 2: Block interval

This method calculates a linear average of the quantity (RMS current, real power, reactive power, or apparent power) over the programmed demand time interval, starting daily at 00:00:00 (that is, 12:00 am). The 1440 minutes per day is divided into the number of blocks as set by the programmed time interval. Each new value of demand becomes available at the end of each time interval.

5.3.10.3 Calculation method 2a: Block interval (with start demand interval logic trigger)

This method calculates a linear average of the quantity (RMS current, real power, reactive power, or apparent power) over the interval between successive Start Demand Interval logic input pulses. Each new value of demand becomes available at the end of each pulse. Assign a FlexLogic operand to the **DEMAND TRIGGER** setting to program the input for the new demand interval pulses.

NOTE

If no trigger is assigned in the **DEMAND TRIGGER** setting and the **CRNT DEMAND METHOD** is "Block Interval," use calculation method 2. If a trigger is assigned, the maximum allowed time between two trigger signals is 60 minutes. If no trigger signal appears within 60 minutes, demand calculations are performed and available, and the algorithm resets and starts the new cycle of calculations. The minimum required time for trigger contact closure is 20 µs.

5.3.10.4 Calculation method 3: Rolling demand

This method calculates a linear average of the quantity (RMS current, real power, reactive power, or apparent power) over the programmed demand time interval, in the same way as Block Interval. The value is updated every minute and indicates the demand over the time interval just preceding the time of update.

5.3.11 User-programmable LEDs

5.3.11.1 Menu

SETTINGS ⇨ PRODUCT SETUP ⇨⇩ USER-PROGRAMMABLE LEDS

■ USER-PROGRAMMABLE ■ LEDS	⇔	■ LED TEST ■	See below
	⇕	■ TRIP & ALARM LEDS ■	See page 5-108
	⇕	■ USER-PROGRAMMABLE ■ LED 1	See page 5-108
	⇩		
	⇧	■ USER-PROGRAMMABLE ■ LED 48	

The 48 amber LEDs on relay panels 2 and 3 can be customized to illuminate when a selected FlexLogic operand is in the logic 1 state. The trip and alarm LEDs on panel 1 can also be customized in a similar manner. To ensure correct functionality of all LEDs, an LED test feature is also provided.

5.3.11.2 LED test

SETTINGS ⇨ PRODUCT SETUP ⇨⇩ USER-PROGRAMMABLE LEDS ⇨ LED TEST

■ LED TEST ■	⇔	LED TEST FUNCTION: Disabled	Range: Disabled, Enabled
	⇧	LED TEST CONTROL: Off	Range: FlexLogic operand

When enabled, the LED test can be initiated from any digital input or user-programmable condition, such as a user-programmable pushbutton. The control operand is configured under the **LED TEST CONTROL** setting. The test covers all LEDs, including the LEDs of the optional user-programmable pushbuttons.

The test consists of the following three stages:

1. All 62 LEDs on the relay are illuminated. This is a quick test to verify if any of the LEDs is “burned.” This stage lasts as long as the control input is on, up to a maximum of 1 minute. After 1 minute, the test ends.
2. All the LEDs are turned off, and then one LED at a time turns on for 1 second, then back off. The test routine starts at the top left panel, moving from the top to bottom of each LED column. This test checks for hardware failures that lead to more than one LED being turned on from a single logic point. This stage can be interrupted at any time.
3. All the LEDs are turned on. One LED at a time turns off for 1 second, then back on. The test routine starts at the top left panel moving from top to bottom of each column of the LEDs. This test checks for hardware failures that lead to more than one LED being turned off from a single logic point. This stage can be interrupted at any time.

When testing is in progress, the LEDs are controlled by the test sequence, rather than the protection, control, and monitoring features. However, the LED control mechanism accepts all the changes to LED states generated by the relay and stores the actual LED states (on or off) in memory. When the test completes, the LEDs reflect the actual state resulting from relay response during testing. The reset pushbutton does not clear any targets when the LED Test is in progress.

A dedicated FlexLogic operand, LED TEST IN PROGRESS, is set for the duration of the test. When the test sequence is initiated, the LED TEST INITIATED event is stored in the event recorder.

The entire test procedure is user-controlled. In particular, stage 1 can last as long as necessary, and stages 2 and 3 can be interrupted. The test responds to the position and rising edges of the control input defined by the **LED TEST CONTROL** setting. The control pulses must last at least 250 ms to take effect. The following diagram explains how the test is executed.

Figure 5-43: LED test sequence

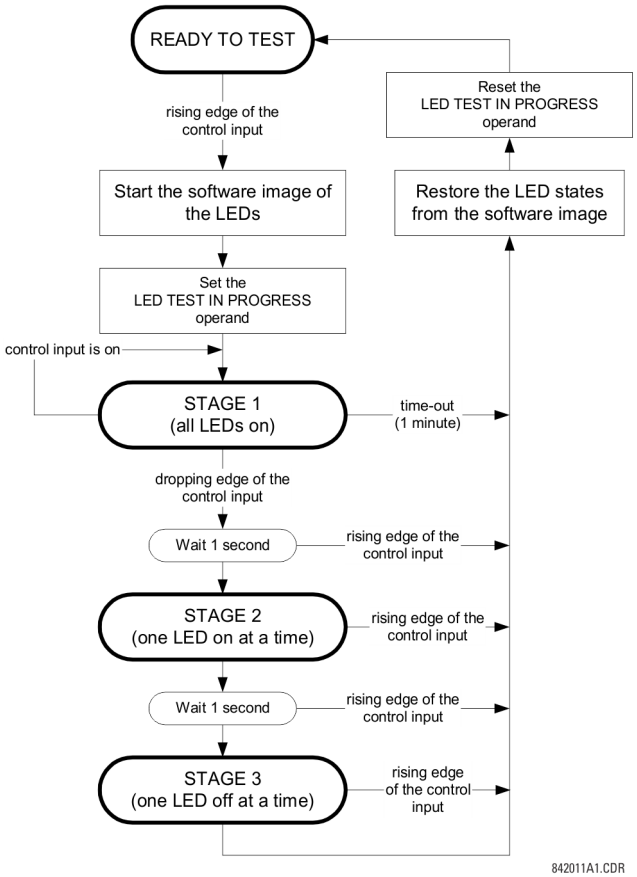

Application example 1

Assume one needs to check if any of the LEDs is "burned" through user-programmable pushbutton 1. Apply the following settings.

Configure user-programmable pushbutton 1 by making the following entries in the **SETTINGS ⇨ PRODUCT SETUP ⇨⇩ USER-PROGRAMMABLE PUSHBUTTONS ⇨ USER PUSHBUTTON 1** menu. (The option does not display when not purchased.)

PUSHBUTTON 1 FUNCTION: "Self-reset"
PUSHBTN 1 DROP-OUT TIME: "0.10 s"

Configure the LED test to recognize user-programmable pushbutton 1 by making the following entries in the **SETTINGS ⇨ PRODUCT SETUP ⇨⇩ USER-PROGRAMMABLE LEDS ⇨ LED TEST** menu:

LED TEST FUNCTION: "Enabled"
LED TEST CONTROL: "PUSHBUTTON 1 ON"

The test is initiated when the user-programmable pushbutton 1 is pressed. Keep the pushbutton pressed for as long as the LEDs are being visually inspected. When finished, release the pushbutton. The relay then automatically starts stage 2. At this point, test can be cancelled by pressing the pushbutton.

Application example 2

Assume one needs to check if any LEDs are "burned" as well as exercise one LED at a time to check for other failures. This is to be performed via user-programmable pushbutton 1.

After applying the settings in application example 1, hold down the pushbutton as long as necessary to test all LEDs. When finished, release the pushbutton so that the relay then automatically starts stage 2. When stage 2 is completed, stage 3 starts automatically. The test can be cancelled at any time by pressing the pushbutton.

5.3.11.3 Trip and alarm LEDs

SETTINGS ⇨ PRODUCT SETUP ⇨⇩ USER-PROGRAMMABLE LEDS ⇨⇩ TRIP & ALARMS LEDS

■ **TRIP & ALARM LEDS** ■	⇔	**TRIP LED INPUT:** **Off**	Range: FlexLogic operand
	⇧	**ALARM LED INPUT:** **Off**	Range: FlexLogic operand

The trip and alarm LEDs are in the first LED column (enhanced faceplate) and on LED panel 1 (basic faceplate). Each indicator can be programmed to become illuminated when the selected FlexLogic operand is in the logic 1 state.

5.3.11.4 User-programmable LED 1(48)

SETTINGS ⇨ PRODUCT SETUP ⇨⇩ USER-PROGRAMMABLE LEDS ⇨⇩ USER-PROGRAMMABLE LED 1(48)

■ **USER-PROGRAMMABLE** ■ **LED 1**	⇔	**LED 1 OPERAND:** **Off**	Range: FlexLogic operand
	⇧	**LED 1 TYPE:** **Self-Reset**	Range: Self-Reset, Latched

There are 48 amber LEDs across the relay faceplate LED panels. Each of these indicators can be programmed to illuminate when the selected FlexLogic operand is in the logic 1 state.

For the basic faceplate, the LEDs are located as follows:

- LED Panel 2 — User-programmable LEDs 1 through 24
- LED Panel 3 — User programmable LEDs 25 through 48

For the enhanced faceplate, the LEDs are located as follows:

- LED column 2 — User-programmable LEDs 1 through 12
- LED column 3 — User-programmable LEDs 13 through 24
- LED column 4 — User-programmable LEDs 25 through 36
- LED column 5 — User-programmable LEDs 37 through 48

See the LED Indicators section in chapter 4 for information on the location of these indexed LEDs.

The user-programmable LED settings select the FlexLogic operands that control the LEDs. If the **LED 1 TYPE** setting is "Self-Reset" (the default setting), the LED illumination tracks the state of the selected LED operand. If the **LED 1 TYPE** setting is "Latched," the LED, once lit, remains so until reset by the faceplate **RESET** button, from a remote device via a communications channel, or from any programmed operand, even if the LED operand state de-asserts.

Table 5-15: Recommended settings for user-programmable LEDs

Setting	Parameter	Setting	Parameter
LED 1 operand	SETTING GROUP ACT 1	LED 13 operand	Off
LED 2 operand	SETTING GROUP ACT 2	LED 14 operand	Off
LED 3 operand	SETTING GROUP ACT 3	LED 15 operand	Off
LED 4 operand	SETTING GROUP ACT 4	LED 16 operand	Off
LED 5 operand	SETTING GROUP ACT 5	LED 17 operand	Off
LED 6 operand	SETTING GROUP ACT 6	LED 18 operand	Off
LED 7 operand	Off	LED 19 operand	Off
LED 8 operand	Off	LED 20 operand	Off
LED 9 operand	Off	LED 21 operand	Off
LED 10 operand	Off	LED 22 operand	Off
LED 11 operand	Off	LED 23 operand	Off
LED 12 operand	Off	LED 24 operand	Off

See the figure in the Setting Groups section of the Control Elements section later in this chapter for an example of group activation.

5.3.12 User-programmable self-tests

SETTINGS ⇨ PRODUCT SETUP ⇨⇩ USER-PROGRAMMALBE SELF TESTS

■ USER-PROGRAMMABLE ■ SELF TESTS	⇔	DIRECT RING BREAK FUNCTION: Enabled	Range: Disabled, Enabled. Valid for units equipped with Direct Input/Output module.
	⇩	DIRECT DEVICE OFF FUNCTION: Enabled	Range: Disabled, Enabled. Valid for units equipped with Direct Input/Output module.
	⇩	RxGOOSE OFF FUNCTION: Enabled	Range: Disabled, Enabled
	⇩	FIRST ETHERNET FAIL FUNCTION: Disabled	Range: Disabled, Enabled
	⇩	SEC. ETHERNET FAIL FUNCTION: Disabled	Range: Disabled, Enabled
	⇩	THIRD ETHERNET FAIL FUNCTION: Disabled	Range: Disabled, Enabled
	⇩	SFP MODULE FAIL FUNCTION: Disabled	Range: Disabled, Enabled
	⇩	BATTERY FAIL FUNCTION: Enabled	Range: Disabled, Enabled
	⇩	SNTP FAIL FUNCTION: Enabled	Range: Disabled, Enabled
	⇩	IRIG-B FAIL FUNCTION: Enabled	Range: Disabled, Enabled
	⇧	PTP FAIL FUNCTION: Enabled	Range: Disabled, Enabled

All major self-test alarms are reported automatically with their corresponding FlexLogic operands, events, and targets. Most of the minor alarms can be disabled if so wanted.

When in the Disabled mode, minor alarms do not assert a FlexLogic operand, write to the event recorder, or display target messages. Moreover, they do not trigger the ANY MINOR ALARM or ANY SELF-TEST messages. When in Enabled mode, minor alarms continue to function along with other major and minor alarms. See the Relay Self-tests section in chapter 7 for information on major and minor self-test alarms.

5.3.13 Control pushbuttons

SETTINGS ⇨ PRODUCT SETUP ⇨⇩ CONTROL PUSHBUTTONS ⇨ CONTROL PUSHBUTTON 1(7)

■ CONTROL ■ PUSHBUTTON 1	⇔	CONTROL PUSHBUTTN 1 ID CTRL PB 1	Range: up to 20 alphanumeric characters
	⇩	CONTROL PUSHBUTTON 1 FUNCTION: Disabled	Range: Disabled, Enabled
	⇧	CONTROL PUSHBUTTON 1 EVENTS: Disabled	Range: Disabled, Enabled

There are three standard control pushbuttons, labeled USER 1, USER 2, and USER 3, on the basic and enhanced front panels. These are user-programmable and can be used for various applications such as performing an LED test, switching setting groups, and invoking and scrolling though user-programmable displays.

The locations of the control pushbuttons are shown in the following figures.

Figure 5-44: Control pushbuttons (enhanced faceplate)

An additional four control pushbuttons are included on the basic faceplate when the B30 is ordered with the 12 user-programmable pushbutton option.

Figure 5-45: Control pushbuttons (basic faceplate)

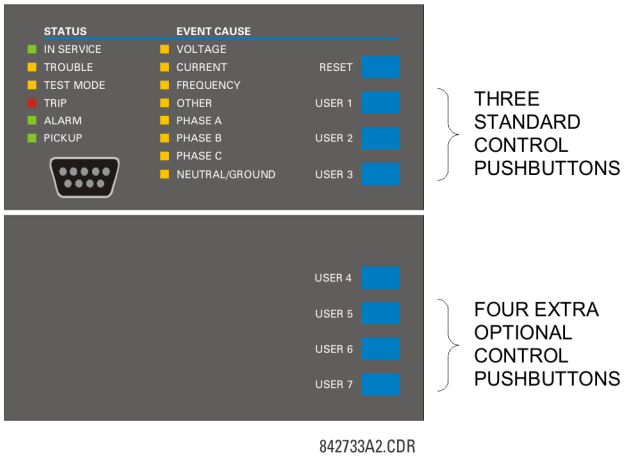

Control pushbuttons are not typically used for critical operations and are not protected by the control password. However, by supervising their output operands, the user can dynamically enable or disable control pushbuttons for security reasons.

Each control pushbutton asserts its own FlexLogic operand. Each operand need to be configured appropriately to perform the required function. Each operand remains asserted as long as the pushbutton is pressed and resets when the pushbutton is released. A dropout delay of 100 ms is incorporated to ensure fast pushbutton manipulation is recognized by various features that can use control pushbuttons as inputs.

An event is logged in the event record (as per user setting) when a control pushbutton is pressed. No event is logged when the pushbutton is released. The faceplate keys (including control keys) cannot be operated simultaneously—a given key must be released before the next one can be pressed.

Figure 5-46: Control pushbutton logic

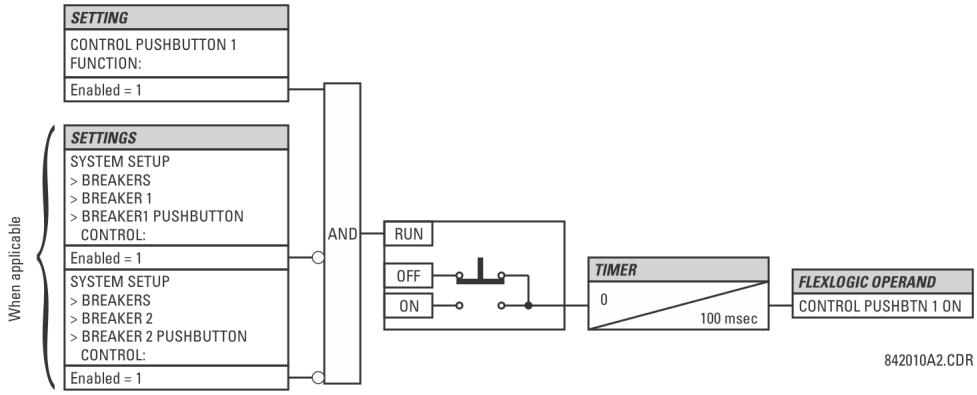

5.3.14 User-programmable pushbuttons

SETTINGS ⇨ PRODUCT SETUP ⇨⇩ USER-PROGRAMMABLE PUSHBUTTONS ⇨ USER PUSHBUTTON 1(16)

■ USER PUSHBUTTON 1 ■	⇔	PUSHBUTTON 1 FUNCTION: Disabled	Range: Self-Reset, Latched, Disabled
	⇩	PUSHBTN 1 ID TEXT: USER PB 1	Range: up to 20 alphanumeric characters
	⇩	PUSHBTN 1 ON TEXT: PUSHBTN 1 ON	Range: up to 20 alphanumeric characters
	⇩	PUSHBTN 1 OFF TEXT: PUSHBTN 1 OFF	Range: up to 20 alphanumeric characters
	⇩	PUSHBTN 1 HOLD: 0.0 s	Range: 0.0 to 10.0 s in steps of 0.1
	⇩	PUSHBTN 1 SET: Off	Range: FlexLogic operand
	⇩	PUSHBTN 1 RESET: Off	Range: FlexLogic operand
	⇩	PUSHBTN 1 AUTORST: Disabled	Range: Disabled, Enabled
	⇩	PUSHBTN 1 AUTORST DELAY: 1.0 s	Range: 0.2 to 600.0 s in steps of 0.1
	⇩	PUSHBTN 1 REMOTE: Off	Range: FlexLogic operand
	⇩	PUSHBTN 1 LOCAL: Off	Range: FlexLogic operand
	⇩	PUSHBTN 1 DROP-OUT TIME: 0.00 s	Range: 0 to 60.00 s in steps of 0.05
	⇩	PUSHBTN 1 LED CTL: Off	Range: FlexLogic operand
	⇩	PUSHBTN 1 MESSAGE: Disabled	Range: Disabled, Normal, High Priority

⇧ **PUSHBUTTON 1 EVENTS: Disabled** Range: Disabled, Enabled

SOFTWARE OPTION

The B30 is provided with this optional feature, specified as an option at the time of ordering. Using the order code for your device, see the order codes in chapter 2 for details.

User-programmable pushbuttons provide an easy and error-free method of entering digital state (on, off) information. The number depends on the front panel ordered.

- Enhanced horizontal front panel — 16 user-programmable pushbuttons
- Enhanced vertical front panel — 6 user-programmable pushbuttons
- Basic horizontal front panel — 12 user-programmable pushbuttons

NOTE

User-programmable pushbuttons require a front panel with that option. If the front panel was ordered separately, update the EnerVista software under **Maintenance > Change Front Panel**.

The digital state can be entered locally (by directly pressing the front panel pushbutton) or remotely (via FlexLogic operands) into FlexLogic equations, protection elements, and control elements. Typical applications include breaker control, autorecloser blocking, and setting groups changes. The user-programmable pushbuttons are under the control level of password protection.

The figure shows user-configurable pushbuttons for the enhanced front panel.

Figure 5-47: User-programmable pushbuttons (enhanced front panel)

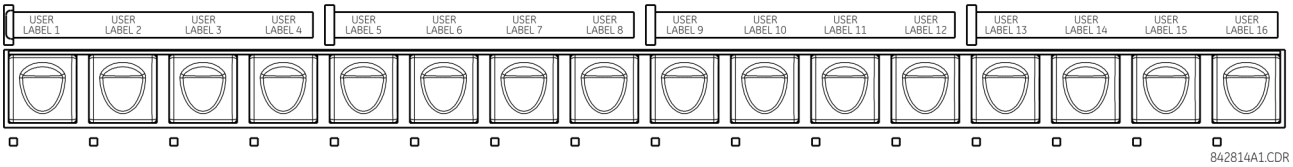

The following figure shows user-configurable pushbuttons for the basic front panel.

Figure 5-48: User-programmable pushbuttons (basic front panel)

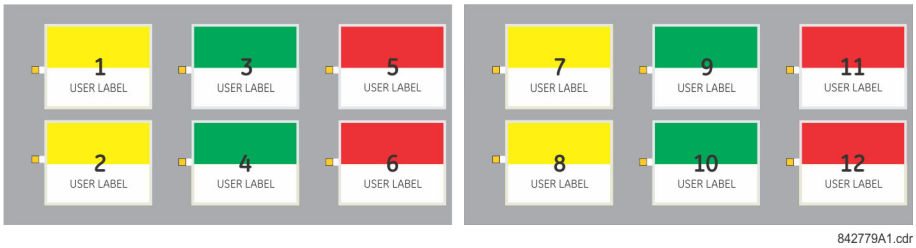

Both the basic and enhanced front panel pushbuttons can be custom labeled with a factory-provided template, available online at http://www.gegridsolutions.com/multilin. The EnerVista software can also be used to create labels for the enhanced front panel.

Each pushbutton asserts its own "On" and "Off" FlexLogic operands (for example, PUSHBUTTON 1 ON and PUSHBUTTON 1 OFF). These operands are available for each pushbutton and are used to program specific actions. If any pushbutton is active, the ANY PB ON operand is asserted.

Each pushbutton has an associated LED indicator. By default, this indicator displays the present status of the corresponding pushbutton (on or off). However, each LED indicator can be assigned to any FlexLogic operand through the **PUSHBTN 1 LED CTL** setting.

The activation and deactivation of user-programmable pushbuttons depends on whether latched or self-reset mode is programmed.

- **Latched mode** — In latched mode, a pushbutton can be set (activated) by asserting the operand assigned to the **PUSHBTN 1 SET** setting or by directly pressing the associated front panel pushbutton. The state of each pushbutton is stored in non-volatile memory and maintained through a loss of control power.

  The pushbutton is reset (deactivated) in latched mode by asserting the operand assigned to the **PUSHBTN 1 RESET** setting or by directly pressing the active front panel pushbutton.

  It can also be programmed to reset automatically through the **PUSHBTN 1 AUTORST** and **PUSHBTN 1 AUTORST DELAY** settings. These settings enable the autoreset timer and specify the associated time delay. The autoreset timer can be used in select-before-operate (SBO) breaker control applications, where the command type (close/open) or breaker location (feeder number) must be selected prior to command execution. The selection must reset automatically if control is not executed within a specified time period.
- **Self-reset mode** — In self-reset mode, a user-programmable pushbutton can be set (activated) by asserting the operand assigned to the **PUSHBTN 1 SET** setting or by pressing the front panel pushbutton. A pushbutton remains active for the time it is pressed plus the dropout time specified in the **PUSHBTN 1 DROP-OUT TIME** setting. If the pushbutton is activated via FlexLogic, the pulse duration is specified by the **PUSHBTN 1 DROP-OUT TIME** only. The time the operand assigned to the **PUSHBTN 1 SET** setting remains On has no effect on the pulse duration.

NOTE

The pulse duration of the remote set or local front panel pushbutton must be at least 50 ms to operate the pushbutton. This allows the user-programmable pushbuttons to properly operate during power cycling events and various system disturbances that can cause transient assertion of the operating signals.

The local and remote operation of each user-programmable pushbutton can be inhibited through the **PUSHBTN 1 LOCAL** and **PUSHBTN 1 REMOTE** settings. If local inhibit is applied, the pushbutton ignores set and reset commands executed through the front panel pushbuttons. If remote inhibit is applied, the pushbutton ignores set and reset commands executed through FlexLogic operands.

The inhibit functions are not applied to the autoreset feature. The inhibit function can be used in SBO control operations to prevent user-programmable pushbutton activation and ensuring “one-at-a-time” select operation.

The inhibit functions can also be used to prevent pushbutton activation from the accidental pressing of the front panel pushbuttons. The separate inhibit of the local and remote operation simplifies the implementation of local/remote control supervision.

Pushbutton states can be logged by the event recorder. User-defined messages can also be associated with each pushbutton and displayed when the pushbutton is activated and when in latched mode when the pushbutton deactivated.

PUSHBUTTON 1 FUNCTION — This setting selects the mode of the pushbutton (Self-Reset, Latched, Disabled). If set to “Disabled,” the pushbutton is not active and the corresponding FlexLogic operands (both “On” and “Off”) are de-asserted.

PUSHBTN 1 ID TEXT — This setting specifies the top 20-character line of the user-programmable pushbutton message and is intended to provide ID information of the pushbutton. See the User-definable Displays section in this chapter for instructions on how to enter alphanumeric characters from the keypad.

PUSHBTN 1 ON TEXT — This setting specifies the bottom 20-character line of the user-programmable pushbutton message and is displayed when the pushbutton is in the “on” position. See the User-definable Displays section for instructions on entering alphanumeric characters from the keypad.

PUSHBTN 1 OFF TEXT — This setting specifies the bottom 20-character line of the user-programmable pushbutton message and displays when the pushbutton is deactivated and the **PUSHBUTTON 1 FUNCTION** is “Latched.” A message does not display when the **PUSHBUTTON 1 FUNCTION** is “Self-reset” as the pushbutton operand status is implied to be “Off” upon its release. The length of the “Off” message is configured with the **PRODUCT SETUP ⇨⇩ DISPLAY PROPERTIES ⇨ FLASH MESSAGE TIME** setting.

PUSHBTN 1 HOLD — This setting specifies the time required for a front panel pushbutton to be pressed before it is deemed active. This timer is reset upon release of the pushbutton. Note that user-programmable pushbutton operation requires the front panel pushbutton to be pressed a minimum of 50 ms. This minimum time is required prior to activating the user-programmable pushbutton hold timer.

PUSHBTN 1 SET — This setting assigns the FlexLogic operand serving to activate the user-programmable pushbutton element. The duration of the incoming set signal must be at least 50 ms.

PUSHBTN 1 RESET — This setting assigns the FlexLogic operand serving to deactivate the user-programmable pushbutton element. This setting is applicable only if the user-programmable pushbutton is in "Latched" mode.

PUSHBTN 1 AUTORST — This setting enables the user-programmable pushbutton autoreset feature. This setting is applicable only if the pushbutton is in “Latched” mode.

PUSHBTN 1 AUTORST DELAY — This setting specifies the time delay for automatic reset of the pushbutton when in "Latched" mode.

PUSHBTN 1 REMOTE — This setting assigns the FlexLogic operand serving to inhibit user-programmable pushbutton operation from the operand assigned to the **PUSHBTN 1 SET** or **PUSHBTN 1 RESET** settings.

PUSHBTN 1 LOCAL — This setting assigns the FlexLogic operand serving to inhibit user-programmable pushbutton operation from the front panel pushbuttons. This inhibit functionality is not applicable to pushbutton autoreset.

PUSHBTN 1 DROP-OUT TIME — This setting applies only to “Self-Reset” mode and specifies the duration of the user-programmable pushbutton active status after the front panel pushbutton has been released. When activated remotely, this setting specifies the entire activation time of the pushbutton; the length of time the operand selected by **PUSHBTN 1 SET** remains on has no effect on the pulse duration.

PUSHBTN 1 LED CTL — This setting assigns the FlexLogic operand serving to drive the front panel pushbutton LED. If this setting is “Off,” then LED operation is directly linked to the PUSHBUTTON 1 ON operand.

PUSHBTN 1 MESSAGE — This setting controls the behavior of the user-programmable pushbutton on message that is programmed in the **PUSHBTN 1 ID** and **PUSHBTN 1 ON TEXT** settings, and the behavior of the user-programmable pushbutton off message that is programmed in the **PUSHBTN 1 ID** and **PUSHBTN 1 OFF TEXT** settings.

When set to "Disabled", user-programmable pushbutton messages do not display. Otherwise the on message displays when the user-programmable pushbutton becomes activated, and if in the "Latched" mode the off message displays when the user-programmable pushbutton becomes deactivated.

When set to "Normal", the duration the message displays is as specified by the **FLASH MESSAGE TIME** setting.

When set to "High Priority", the duration of the off message is as specified by the **FLASH MESSAGE TIME** setting, but the on message is displayed as long as the user-programmable pushbutton is activated. While activated, target and other messages are suppressed. To allow front panel keypad operation, when a keypad button is pressed the message is supressed for 10 seconds.

PUSHBUTTON 1 EVENTS — If this setting is enabled, each user-programmable pushbutton state change is logged as an event into the event recorder.

The figures show the user-programmable pushbutton logic.

Figure 5-49: User-programmable pushbutton logic (Sheet 1 of 2)

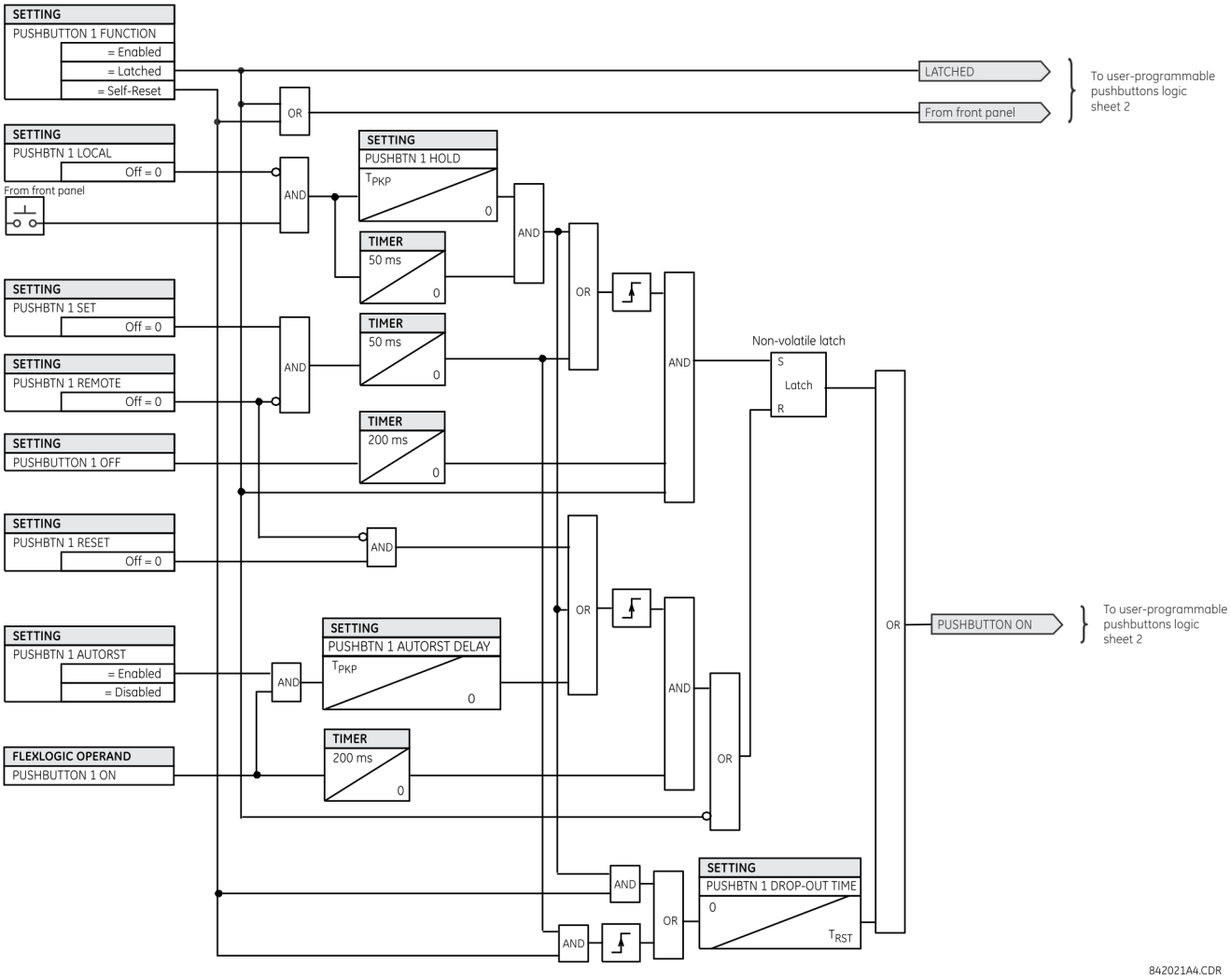

Figure 5-50: User-programmable pushbutton logic (Sheet 2 of 2)

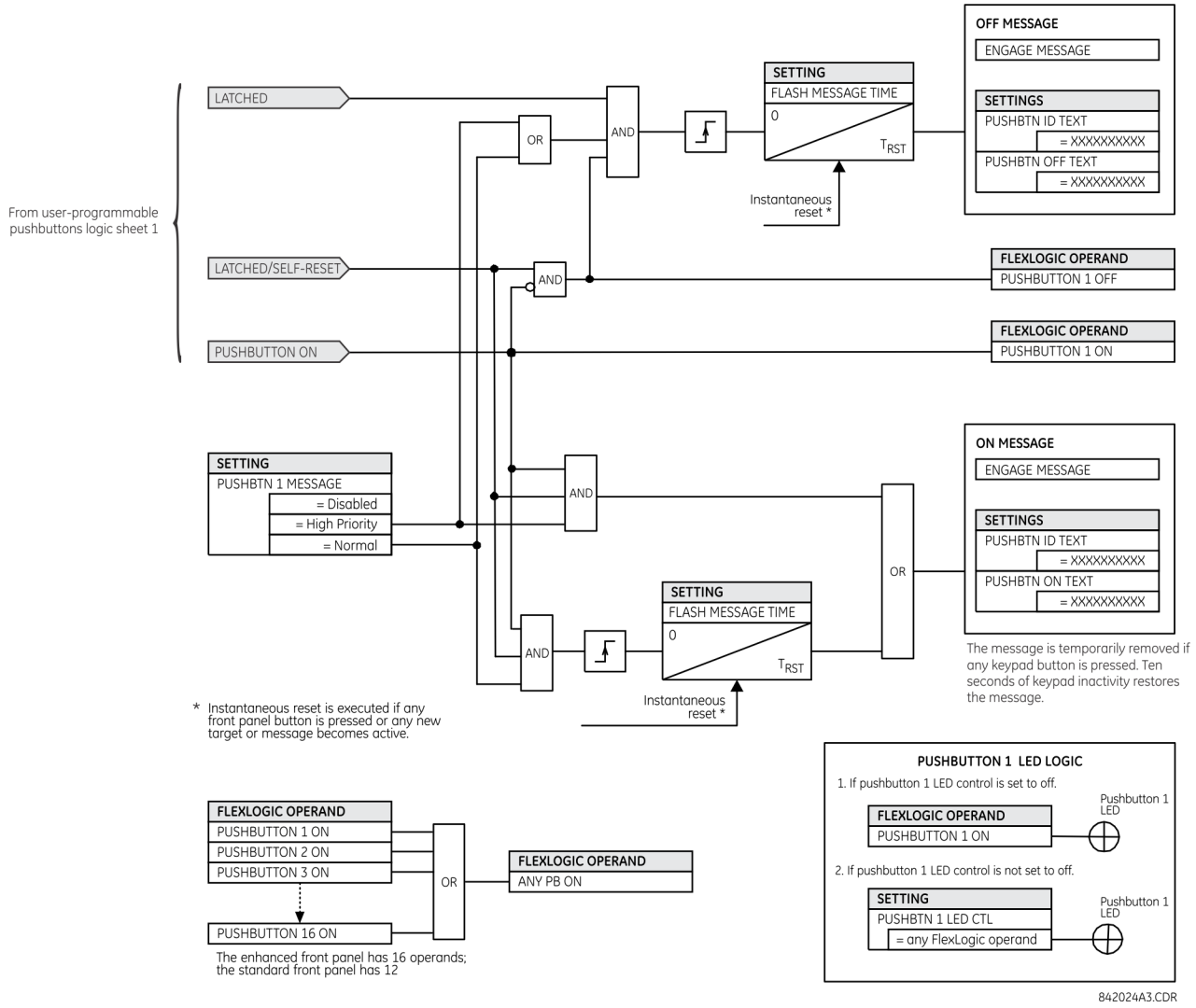

5.3.15 Flex state parameters

SETTINGS ⇨ PRODUCT SETUP ⇨⇩ FLEX STATE PARAMETERS

■ FLEX STATE ■ PARAMETERS	⇔	**PARAMETER 1:** **Off**	Range: FlexLogic operand
		⇩	
	⇧	**PARAMETER 256:** **Off**	Range: FlexLogic operand

This feature provides a mechanism where any of 256 selected FlexLogic operand states can be used for efficient monitoring. The feature allows user-customized access to the FlexLogic operand states in the relay. The state bits are packed so that 16 states are readable in a single Modbus register. The state bits can be configured so that all states of interest are available in a minimum number of Modbus registers.

The state bits can be read out in the "Flex States" register array beginning at Modbus address 0900h. Sixteen states are packed into each register, with the lowest-numbered state in the lowest-order bit. Sixteen registers accommodate the 256 state bits.

5.3.16 User-definable displays

5.3.16.1 Menu

SETTINGS ⇨ PRODUCT SETUP ⇨⇩ USER-DEFINABLE DISPLAYS

■ USER-DEFINABLE ■ DISPLAYS	⇔	INVOKE AND SCROLL: Off	Range: FlexLogic operand
	⇩	■ USER DISPLAY 1 ■	See below
	⇩		
	⇧	■ USER DISPLAY 16 ■	

This menu provides a mechanism for manually creating up to 16 user-defined information displays in a convenient viewing sequence in the **USER DISPLAY** menu (between the **TARGETS** and **ACTUAL VALUES** top-level menus). The sub-menus facilitate text entry and Modbus register data pointer options for defining the user display content.

Once programmed, the user-definable displays can be viewed in two ways.

- **Keypad** — Use the **MENU** key to select the **USER DISPLAY** menu item to access the first user-definable display (note that only the programmed screens are displayed). The screens can be scrolled using the up and down arrow keys. The display disappears after the default message time-out period specified by the **PRODUCT SETUP ⇨⇩ DISPLAY PROPERTIES ⇨⇩ DEFAULT MESSAGE TIMEOUT** setting.
- **User-programmable control input** — The user-definable displays also respond to the **INVOKE AND SCROLL** setting. Any FlexLogic operand (in particular, the user-programmable pushbutton operands), can be used to navigate the programmed displays.

  On the rising edge of the configured operand (such as when the pushbutton is pressed), the displays are invoked by showing the last user-definable display shown during the previous activity. From this moment onward, the operand acts exactly as the down key and allows scrolling through the configured displays. The last display wraps up to the first one. The **INVOKE AND SCROLL** input and the down arrow key operate concurrently.

  When the default timer expires (set by the **DEFAULT MESSAGE TIMEOUT** setting), the relay starts to cycle through the user displays. The next activity of the **INVOKE AND SCROLL** input stops the cycling at the currently displayed user display, not at the first user-defined display. The **INVOKE AND SCROLL** pulses must last for at least 250 ms to take effect.

5.3.16.2 User display 1(16)

SETTINGS ⇨ PRODUCT SETUP ⇨⇩ USER-DEFINABLE DISPLAYS ⇨⇩ USER DISPLAY 1(16)

■ USER DISPLAY 1 ■	⇔	DISP 1 TOP LINE:	Range: up to 20 alphanumeric characters
	⇩	DISP 1 BOTTOM LINE:	Range: up to 20 alphanumeric characters
	⇩	DISP 1 ITEM 1: 0	Range: 0 to 65535 in steps of 1
	⇩		
	⇧	DISP 1 ITEM 5: 0	Range: 0 to 65535 in steps of 1

Any existing system display can be automatically copied into an available user display by selecting the existing display and pressing the **ENTER** key. The display then prompts with ADD TO USER DISPLAY LIST? After selecting "Yes," a message indicates that the selected display has been added to the user display list. When this type of entry occurs, the sub-menus are automatically configured with the proper content—this content can be edited subsequently.

This menu is used to enter user-defined text and user-selected Modbus-registered data fields into the particular user display. Each user display consists of two 20-character lines (top and bottom). The tilde (~) character is used to mark the start of a data field – the length of the data field needs to be accounted for. Up to five separate data fields can be entered in a user display – the *n*th tilde (~) refers to the *n*th item.

A user display can be entered from the faceplate keypad or the EnerVista interface (preferred for convenience). The following procedure shows how to enter text characters in the top and bottom lines from the faceplate keypad:

1. Select the line to be edited.
2. Press the decimal key to enter text edit mode.
3. Use either **VALUE** key to scroll through the characters. A space is selected like a character.
4. Press the decimal key to advance the cursor to the next position.
5. Repeat step 3 and continue entering characters until the desired text is displayed.
6. The **HELP** key can be pressed at any time for context sensitive help information.
7. Press the **ENTER** key to store the new settings.

To enter a numerical value for any of the five items (the *decimal form* of the selected Modbus address) from the faceplate keypad, use the number keypad. Use the value of "0" for any items not being used. Use the **HELP** key at any selected system display (setting, actual value, or command) which has a Modbus address, to view the *hexadecimal form* of the Modbus address, then manually convert it to decimal form before entering it (EnerVista usage conveniently facilitates this conversion).

Use the **MENU** key to go to the user displays menu to view the user-defined content. The current user displays show in sequence, changing every four seconds. While viewing a user display, press the **ENTER** key and then select the 'Yes" option to remove the display from the user display list. Use the **MENU** key again to exit the user displays menu.

5

An example of user display setup and result is shown as follows.

■ USER DISPLAY 1 ■	⇔	DISP 1 TOP LINE: Current X ~ A	Shows user-defined text with first tilde marker
	⇕	DISP 1 BOTTOM LINE: Current Y ~ A	Shows user-defined text with second tilde marker
	⇕	DISP 1 ITEM 1: 6016	Shows decimal form of user-selected Modbus register address, corresponding to first tilde marker
	⇕	DISP 1 ITEM 2: 6357	Shows decimal form of user-selected Modbus register address, corresponding to second tilde marker
	⇕	DISP 1 ITEM 3: 0	This item is not being used. There is no corresponding tilde marker in top or bottom lines.
	⇕	DISP 1 ITEM 4: 0	This item is not being used. There is no corresponding tilde marker in top or bottom lines.
	⇧	DISP 1 ITEM 5: 0	This item is not being used. There is no corresponding tilde marker in top or bottom lines.
USER DISPLAYS	⇨	Current X 0.850 Current Y 0.327 A	Shows the resultant display content

If the parameters for the top line and the bottom line items have the same units, then the unit is displayed on the bottom line only. The units are only displayed on both lines if the units specified both the top and bottom line items are different.

5.3.17 Direct inputs and outputs

5.3.17.1 Menu

SETTINGS ⇨ PRODUCT SETUP ⇨⇩ DIRECT I/O

■ DIRECT I/O ■	⇔	DIRECT OUTPUTS DEVICE ID: 1	Range: 1 to 16 in steps of 1
	⇩	DIRECT I/O CH1 RING CONFIGURATION: Yes	Range: Yes, No
	⇩	DIRECT I/O CH2 RING CONFIGURATION: Yes	Range: Yes, No
	⇩	DIRECT I/O DATA RATE: 64 kbps	Range: 64 kbps, 128 kbps
	⇩	DIRECT I/O CHANNEL CROSSOVER: Disabled	Range: Disabled, Enabled
	⇩	■ CRC ALARM CH1 ■	See page 5-124
	⇩	■ CRC ALARM CH2 ■	
	⇩	■ UNRETURNED ■ MESSAGES ALARM CH1	See page 5-125
	⇧	■ UNRETURNED ■ MESSAGES ALARM CH2	

SOFTWARE OPTION

This option is available when an Inter-Relay Communications card is specified at the time of ordering (see the Order Code tables). With the option, direct inputs/outputs display by default. When you enable the teleprotection feature, direct I/O is not visible.

Direct inputs and outputs exchange status information (inputs and outputs) between UR-series relays connected directly via type 7 digital communications cards. The mechanism is very similar to IEC 61850 GOOSE, except that communications takes place over a non-switchable isolated network and is optimized for speed. On type 7 cards that support two channels, direct output messages are sent from both channels simultaneously. This effectively sends direct output messages both ways around a ring configuration. On type 7 cards that support one channel, direct output messages are sent only in one direction. Messages are resent (forwarded) when it is determined that the message did not originate at the receiver.

Direct Inputs and Outputs are initiated automatically and start running once at least one Direct Output in the given UR is set to anything but Off.

For the direct I/Os to function properly, all UR devices sending I/Os using an Inter-Relay Communications card must have identical firmware revisions.

NOTE

Teleprotection inputs/outputs and direct inputs/outputs are mutually exclusive. As such, they cannot be used simultaneously. Once teleprotection inputs and outputs are enabled, direct inputs and outputs are disabled, and vice versa.

Direct output message timing is similar to GOOSE message timing. Integrity messages (with no state changes) are sent at least every 1000 ms. Messages with state changes are sent within the main pass scanning the inputs and asserting the outputs unless the communication channel bandwidth has been exceeded. Two self-tests are performed and signaled by the following FlexLogic operands:

- DIRECT RING BREAK (direct input/output ring break). This FlexLogic operand indicates that direct output messages sent from a UR-series relay are not being received back by the relay.
- DIRECT DEVICE 1 OFF to DIRECT DEVICE 16 OFF (direct device offline). These FlexLogic operands indicate that direct output messages from at least one direct device are not being received.

Direct input and output settings are similar to remote input and output settings. The equivalent of the remote device name strings for direct inputs and outputs is the **DIRECT OUTPUT DEVICE ID** setting, which identifies the relay in all direct output messages. All UR-series IEDs in a ring need to have unique numbers assigned. The IED ID is used to identify the sender of the direct input and output message.

If the direct input and output scheme is configured to operate in a ring (**DIRECT I/O CH1 RING CONFIGURATION** or **DIRECT I/O CH2 RING CONFIGURATION** is "Yes"), all direct output messages are received back. If not, the direct input/output ring break self-test is triggered. The self-test error is signaled by the DIRECT RING BREAK FlexLogic operand.

Select the **DIRECT I/O DATA RATE** to match the data capabilities of the communications channel. All IEDs communicating over direct inputs and outputs must be set to the same data rate. UR-series IEDs equipped with dual-channel communications cards apply the same data rate to both channels. Delivery time for direct input and output messages is approximately 0.2 of a power system cycle at 128 kbps and 0.4 of a power system cycle at 64 kbps, per each "bridge."

Table 5-16: Direct input and output data rates

Module	Supported data rates
2A, 2B	64 kbps
2E, 2F (legacy modules)	64 kbps
2G, 2H	128 kbps
2I, 2J	64 kbps, 128 kbps
72, 73	64 kbps, 128 kbps
74, 75	64 kbps
76, 77	64 kbps
7A, 7B, 7C, 7D	64 kbps, 128 kbps
7E, 7F, 7G	64 kbps
7H, 7I, 7J, 7K	64 kbps, 128 kbps
7L, 7M, 7N, 7P, 7Q	64 kbps
7R, 7S	64 kbps
7T, 7W	64 kbps

NOTE

The G.703 modules are fixed at 64 kbps. The **DIRECT I/O DATA RATE** setting is not applicable to these modules.

The **DIRECT I/O CHANNEL CROSSOVER** setting applies to a B30 with dual-channel communication cards and allows crossing over messages from channel 1 to channel 2. This places all UR-series IEDs into one direct input and output network regardless of the physical media of the two communication channels.

The following application examples illustrate the basic concepts for direct input and output configuration. See the Inputs and Outputs section in this chapter for information on configuring FlexLogic operands (flags, bits) to be exchanged.

Example 1: Extending the input/output capabilities of a UR-series relay

Consider an application that requires additional quantities of contact inputs or output contacts or lines of programmable logic that exceed the capabilities of a single UR-series chassis. The problem is solved by adding an extra UR-series IED, such as the C30, to satisfy the additional input and output and programmable logic requirements. The two IEDs are connected via single-channel digital communication cards as shown in the figure.

Figure 5-51: Input and output extension via direct inputs and outputs

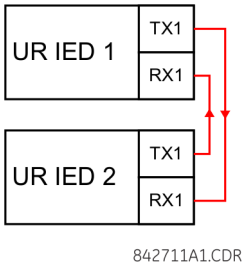

In this application, apply the following settings. For UR-series IED 1:

DIRECT OUTPUT DEVICE ID: "1"
DIRECT I/O CH1 RING CONFIGURATION: "Yes"
DIRECT I/O DATA RATE: "128 kbps"

For UR-series IED 2:

DIRECT OUTPUT DEVICE ID: "2"
DIRECT I/O CH1 RING CONFIGURATION: "Yes"
DIRECT I/O DATA RATE: "128 kbps"

The message delivery time is about 0.2 of power cycle in both ways (at 128 kbps); that is, from device 1 to device 2, and from device 2 to device 1. Different communications cards can be selected by the user for this back-to-back connection (for example: fiber, G.703, or RS422).

Example 2: Interlocking busbar protection

A simple interlocking busbar protection scheme could be accomplished by sending a blocking signal from downstream devices, say 2, 3, and 4, to the upstream device that monitors a single incomer of the busbar, as shown.

Figure 5-52: Sample interlocking busbar protection scheme

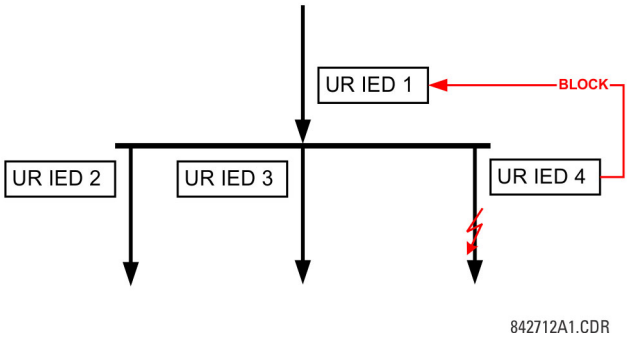

For increased reliability, a dual-ring configuration (shown as follows) is recommended for this application.

Figure 5-53: Interlocking bus protection scheme via direct inputs/outputs

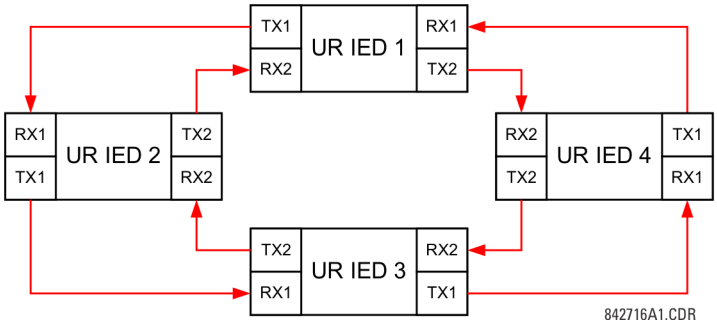

In this application, apply the following settings. For UR-series IED 1:

DIRECT OUTPUT DEVICE ID: "1"
DIRECT I/O CH1 RING CONFIGURATION: "Yes"
DIRECT I/O CH2 RING CONFIGURATION: "Yes"

For UR-series IED 2:

DIRECT OUTPUT DEVICE ID: "2"
DIRECT I/O CH1 RING CONFIGURATION: "Yes"
DIRECT I/O CH2 RING CONFIGURATION: "Yes"

For UR-series IED 3:

DIRECT OUTPUT DEVICE ID: "3"
DIRECT I/O CH1 RING CONFIGURATION: "Yes"
DIRECT I/O CH2 RING CONFIGURATION: "Yes"

For UR-series IED 4:

DIRECT OUTPUT DEVICE ID: "4"
DIRECT I/O CH1 RING CONFIGURATION: "Yes"
DIRECT I/O CH2 RING CONFIGURATION: "Yes"

Message delivery time is approximately 0.2 of power system cycle (at 128 kbps) times number of 'bridges' between the origin and destination. Dual-ring configuration effectively reduces the maximum 'communications distance' by a factor of two.

In this configuration the following delivery times are expected (at 128 kbps) if both rings are healthy:

IED 1 to IED 2: 0.2 of power system cycle
IED 1 to IED 3: 0.4 of power system cycle
IED 1 to IED 4: 0.2 of power system cycle
IED 2 to IED 3: 0.2 of power system cycle
IED 2 to IED 4: 0.4 of power system cycle
IED 3 to IED 4: 0.2 of power system cycle

If one ring is broken (say TX2-RX2) the delivery times are as follows:

IED 1 to IED 2: 0.2 of power system cycle
IED 1 to IED 3: 0.4 of power system cycle
IED 1 to IED 4: 0.6 of power system cycle
IED 2 to IED 3: 0.2 of power system cycle
IED 2 to IED 4: 0.4 of power system cycle
IED 3 to IED 4: 0.2 of power system cycle

A coordinating timer for this bus protection scheme could be selected to cover the worst case scenario (0.4 of a power system cycle). Upon detecting a broken ring, the coordination time is adaptively increased to 0.6 of a power system cycle. The complete application requires addressing a number of issues, such as failure of both the communications rings, failure or out-of-service conditions of one of the relays, and so on. Self-monitoring flags of the direct inputs and outputs feature primarily are used to address these concerns.

Example 3: Pilot-aided schemes

Consider the three-terminal line protection application shown.

Figure 5-54: Three-terminal line application

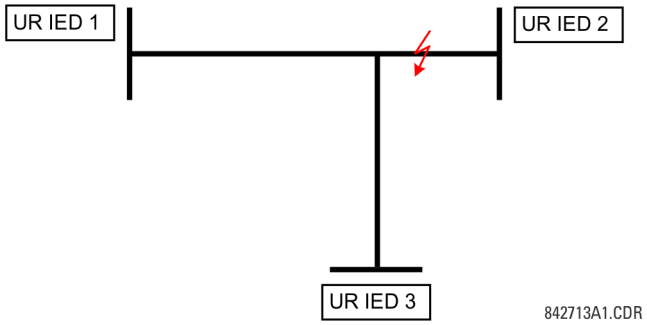

A permissive pilot-aided scheme can be implemented in a two-ring configuration, shown as follows (IEDs 1 and 2 constitute a first ring, while IEDs 2 and 3 constitute a second ring).

Figure 5-55: Single-channel open loop configuration

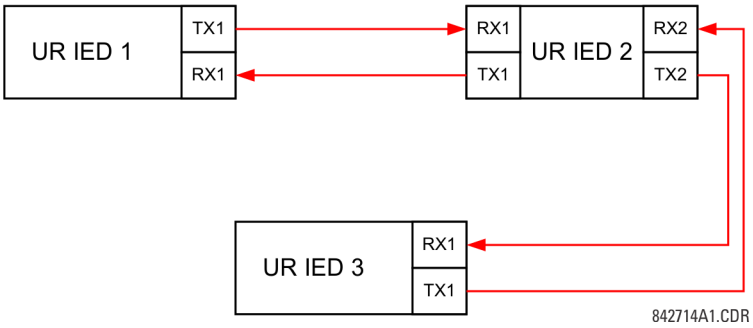

In this application, apply the following settings. For UR-series IED 1:

DIRECT OUTPUT DEVICE ID: "1"
DIRECT I/O CH1 RING CONFIGURATION: "Yes"
DIRECT I/O CH2 RING CONFIGURATION: "Yes"

For UR-series IED 2:

DIRECT OUTPUT DEVICE ID: "2"
DIRECT I/O CH1 RING CONFIGURATION: "Yes"
DIRECT I/O CH2 RING CONFIGURATION: "Yes"

For UR-series IED 3:

DIRECT OUTPUT DEVICE ID: "3"
DIRECT I/O CH1 RING CONFIGURATION: "Yes"
DIRECT I/O CH2 RING CONFIGURATION: "Yes"

In this configuration the following delivery times are expected (at 128 kbps):

IED 1 to IED 2: 0.2 of power system cycle
IED 1 to IED 3: 0.5 of power system cycle
IED 2 to IED 3: 0.2 of power system cycle

In this scheme, IEDs 1 and 3 do not communicate directly. IED 2 must be configured to forward the messages as explained in the Inputs and Outputs section. Implement a blocking pilot-aided scheme with more security and, ideally, faster message delivery time. This is accomplished using a dual-ring configuration as shown here.

Figure 5-56: Dual-channel closed loop (dual-ring) configuration

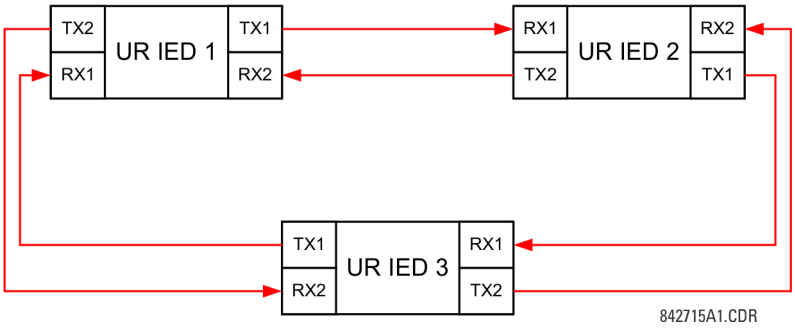

In this application, apply the following settings. For UR-series IED 1:

DIRECT OUTPUT DEVICE ID: "1"
DIRECT I/O CH1 RING CONFIGURATION: "Yes"
DIRECT I/O CH2 RING CONFIGURATION: "Yes"

For UR-series IED 2:

DIRECT OUTPUT DEVICE ID: "2"
DIRECT I/O CH1 RING CONFIGURATION: "Yes"
DIRECT I/O CH2 RING CONFIGURATION: "Yes"

For UR-series IED 3:

DIRECT OUTPUT DEVICE ID: "3"
DIRECT I/O CH1 RING CONFIGURATION: "Yes"
DIRECT I/O CH2 RING CONFIGURATION: "Yes"

In this configuration the following delivery times are expected (at 128 kbps) if both the rings are healthy:

IED 1 to IED 2: 0.2 of power system cycle
IED 1 to IED 3: 0.2 of power system cycle
IED 2 to IED 3: 0.2 of power system cycle

The two communications configurations can be applied to both permissive and blocking schemes. Take speed, reliability, and cost into account when selecting the required architecture.

5.3.17.2 CRC alarm CH1(2)

SETTINGS ⇨ PRODUCT SETUP ⇨⇩ DIRECT I/O ⇨⇩ CRC ALARM CH1(2)

■ **CRC ALARM CH1** ■	⇔	**CRC ALARM CH1 FUNCTION: Disabled**	Range: Enabled, Disabled
	⇩	**CRC ALARM CH1 MESSAGE COUNT: 600**	Range: 100 to 10000 in steps of 1
	⇩	**CRC ALARM CH1 THRESHOLD: 10**	Range: 1 to 1000 in steps of 1
	⇧	**CRC ALARM CH1 EVENTS: Disabled**	Range: Enabled, Disabled

The B30 checks integrity of the incoming direct input and output messages using a 32-bit CRC. The CRC alarm function is available for monitoring the communication medium noise by tracking the rate of messages failing the CRC check. The monitoring function counts all incoming messages, including messages that failed the CRC check. A separate counter adds up messages that failed the CRC check. When the failed CRC counter reaches the user-defined level specified by the **CRC ALARM CH1 THRESHOLD** setting within the user-defined message count **CRC ALARM 1 CH1 COUNT**, the DIR IO CH1 CRC ALARM FlexLogic operand is set.

When the total message counter reaches the user-defined maximum specified by the **CRC ALARM CH1 MESSAGE COUNT** setting, both the counters reset and the monitoring process is restarted.

Configure the operand to drive an output contact, user-programmable LED, or selected communication-based output. Latching and acknowledging conditions—if required—are programmed accordingly.

The CRC alarm function is available on a per-channel basis. The total number of direct input and output messages that failed the CRC check is available as the **ACTUAL VALUES ⇨ STATUS ⇨⇩ DIRECT INPUTS ⇨⇩ CRC FAIL COUNT CH1** actual value.

- **Message count and length of the monitoring window** — To monitor communications integrity, the relay sends 1 message per second (at 64 kbps) or 2 messages per second (at 128 kbps) even if there is no change in the direct outputs. For example, setting the **CRC ALARM CH1 MESSAGE COUNT** to "10000," corresponds a time window of about 160 minutes at 64 kbps and 80 minutes at 128 kbps. If the messages are sent faster as a result of direct outputs activity, the monitoring time interval shortens. Take this into account when determining the **CRC ALARM CH1 MESSAGE COUNT** setting. For example, if the requirement is a maximum monitoring time interval of 10 minutes at 64 kbps, then the **CRC ALARM CH1 MESSAGE COUNT** is set to 10 × 60 × 1 = 600.
- **Correlation of failed CRC and bit error rate (BER)** — The CRC check can fail if one or more bits in a packet are corrupted. Therefore, an exact correlation between the CRC fail rate and the BER is not possible. Under certain assumptions an approximation can be made as follows. A direct input and output packet containing 20 bytes results in 160 bits of data being sent and therefore, a transmission of 63 packets is equivalent to 10,000 bits. A BER of 10^{-4} implies 1 bit error for every 10000 bits sent or received. Assuming the best case of only 1 bit error in a failed packet, having 1 failed packet for every 63 received is about equal to a BER of 10^{-4}.

5.3.17.3 Unreturned messages alarm CH1(2)

SETTINGS ⇨ PRODUCT SETUP ⇨⇩ DIRECT I/O ⇨⇩ UNRETURNED MESSAGES ALARM CH1(2)

■ UNRETURNED ■ MESSAGES ALARM CH1	⇔	UNRET MSGS ALARM CH1 FUNCTION: Disabled	Range: Enabled, Disabled
	⇩	UNRET MSGS ALARM CH1 MESSAGE COUNT: 600	Range: 100 to 10000 in steps of 1
	⇩	UNRET MSGS ALARM CH1 THRESHOLD: 10	Range: 1 to 1000 in steps of 1
	⇧	UNRET MSGS ALARM CH1 EVENTS: Disabled	Range: Enabled, Disabled

The B30 checks integrity of the direct input and output communication ring by counting unreturned messages. In the ring configuration, all messages originating at a given device should return within a pre-defined period of time. The unreturned messages alarm function is available for monitoring the integrity of the communication ring by tracking the rate of unreturned messages. This function counts all the outgoing messages and a separate counter adds the messages have failed to return. When the unreturned messages counter reaches the user-definable level specified by the **UNRET MSGS ALARM CH1 THRESHOLD** setting and within the user-defined message count **UNRET MSGS ALARM CH1 COUNT**, the DIR IO CH1 UNRET ALM FlexLogic operand is set.

When the total message counter reaches the user-defined maximum specified by the **UNRET MSGS ALARM CH1 MESSAGE COUNT** setting, both the counters reset and the monitoring process is restarted.

Configure the operand to drive an output contact, user-programmable LED, or selected communication-based output. Latching and acknowledging conditions, if required, are programmed accordingly.

The unreturned messages alarm function is available on a per-channel basis and is active only in the ring configuration. The total number of unreturned input and output messages is available as the **ACTUAL VALUES ⇨ STATUS ⇨⇩ DIRECT INPUTS ⇨⇩ UNRETURNED MSG COUNT CH1** actual value.

5.3.18 Teleprotection

SETTINGS ⇨ PRODUCT SETUP ⇨⇩ TELEPROTECTION

■ TELEPROTECTION ■	⇔	TELEPROTECTION FUNCTION: Disabled	Range: Disabled, Enabled
	⇩	NUMBER OF TERMINALS: 2	Range: 2, 3

⇳	**NUMBER OF COMM CHANNELS: 1**	Range: 1, 2
⇳	**LOCAL RELAY ID NUMBER: 0**	Range: 0 to 63 in steps of 1
⇳	**TERMINAL 1 RELAY ID NUMBER: 0**	Range: 0 to 63 in steps of 1
⇧	**TERMINAL 2 RELAY ID NUMBER: 0**	Range: 0 to 63 in steps of 1

SOFTWARE OPTION

This option is available when an Inter-Relay Communications card is specified at the time of ordering (see the Order Code tables). With the option, direct inputs/outputs display by default. When you enable the teleprotection feature, direct I/O is not visible.

Digital teleprotection transfers protection commands between two or three relays in a secure, fast, dependable, and deterministic way. Possible applications are permissive or blocking pilot schemes and direct transfer trip (DTT). Teleprotection can be applied over any analog or digital channels and any communications media, such as direct fiber, copper wires, optical networks, or microwave radio links. A mixture of communication media is possible.

Once teleprotection is enabled and the teleprotection input/outputs are configured, data packets are transmitted continuously every 1/4 cycle (3/8 cycle if using C37.94 modules) from peer-to-peer. Security of communication channel data is achieved by using CRC-32 on the data packet.

NOTE

Teleprotection inputs/outputs and direct inputs/outputs are mutually exclusive. As such, they cannot be used simultaneously. Once teleprotection inputs and outputs are enabled, direct inputs and outputs are blocked, and vice versa.

5

NUMBER OF TERMINALS — Specifies whether the teleprotection system operates between two peers or three peers.

NUMBER OF CHANNELS — Specifies how many channels are used. If the **NUMBER OF TERMINALS** is "3" (three-terminal system), set the **NUMBER OF CHANNELS** to "2." For a two-terminal system, the **NUMBER OF CHANNELS** can set to "1" or "2" (redundant channels).

LOCAL RELAY ID NUMBER, **TERMINAL 1 RELAY ID NUMBER**, and **TERMINAL 2 RELAY ID NUMBER** — In installations that use multiplexers or modems, it is desirable to ensure that the data used by the relays protecting a given line is from the correct relays. The teleprotection function performs this check by reading the message ID sent by transmitting relays and comparing it to the programmed ID in the receiving relay. This check is also used to block inputs if inadvertently set to loopback mode or data is being received from a wrong relay by checking the ID on a received channel. If an incorrect ID is found on a channel during normal operation, the TELEPROT CH1 ID FAIL or TELEPROT CH2 ID FAIL FlexLogic operand is set, driving the event with the same name and blocking the teleprotection inputs. For commissioning purposes, the result of channel identification is also shown in the **STATUS ⇨⇩ CHANNEL TESTS ⇨⇩ VALIDITY OF CHANNEL CONFIGURATION** actual value. The default value of "0" for the **LOCAL RELAY ID NUMBER** indicates that relay ID is not to be checked. On two- terminals two-channel systems, the same **LOCAL RELAY ID NUMBER** is transmitted over both channels; as such, only the **TERMINAL 1 ID NUMBER** has to be programmed on the receiving end.

5.3.19 Installation

SETTINGS ⇨ PRODUCT SETUP ⇨⇩ INSTALLATION

■ **INSTALLATION** ■	⇔	**RELAY SETTINGS: Not Programmed**	Range: Not Programmed, Programmed
	⇧	**RELAY NAME: Relay-1**	Range: up to 20 alphanumeric characters

RELAY SETTINGS — To safeguard against the installation of a relay without any entered settings, the unit does not allow signaling of any output relay until **RELAY SETTINGS** is set to "Programmed." This setting is "Not Programmed" by default. The UNIT NOT PROGRAMMED self-test error message displays until the relay is put into the "Programmed" state.

RELAY NAME — This setting allows the user to uniquely identify a relay. This name appears on generated reports.

5.4 Remote resources

5.4.1 Remote resources configuration

When the B30 is ordered with a process card module as a part of HardFiber system, an additional **Remote Resources** menu tree is available in the EnerVista software to allow configuration of the HardFiber system.

Figure 5-57: Remote Resources configuration menu

The remote resources settings configure a B30 with a process bus module to work with HardFiber Bricks. Remote resources configuration is only available through the EnerVista software, and is not available through the B30 front panel. A Brick provides eight AC measurements, along with contact inputs, DC analog inputs, and contact outputs, to be the remote interface to field equipment such as circuit breakers and transformers. The B30 with a process bus module has access to all of the capabilities of up to eight Bricks. Remote resources settings configure the point-to-point connection between specific fiber optic ports on the B30 process card and specific Brick. The relay is then configured to measure specific currents, voltages and contact inputs from those Bricks, and to control specific outputs.

The configuration process for remote resources is straightforward and consists of the following steps.

- Configure the field units. This establishes the point-to-point connection between a specific port on the relay process bus module, and a specific digital core on a specific Brick. This is a necessary first step in configuring a process bus relay.
- Configure the AC banks. This sets the primary and secondary quantities and connections for currents and voltages. AC bank configuration also provides a provision for redundant measurements for currents and voltages, a powerful reliability improvement possible with process bus.
- Configure signal sources. This functionality of the B30 has not changed other than the requirement to use currents and voltages established by AC bank configuration under the remote resources menu.
- Configure field contact inputs, field contact outputs, RTDs, and transducers as required for the application's functionality. These inputs and outputs are the physical interface to circuit breakers, transformers, and other equipment. They replace the traditional contact inputs and outputs located at the relay to virtually eliminate copper wiring.
- Configure shared inputs and outputs as required for the application's functionality. Shared inputs and outputs are distinct binary channels that provide high-speed protection quality signaling between relays through a Brick.

For additional information on how to configure a relay with a process bus module, see the HardFiber Process Bus System Instruction Manual.

5.5 System setup

5.5.1 AC inputs

5.5.1.1 Current banks

SETTINGS ⇨⇩ SYSTEM SETUP ⇨ AC INPUTS ⇨ CURRENT BANK F1(S5)

■ CURRENT BANK F1 ■	⇔	PHASE CT F1 PRIMARY: 1 A	Range: 1 to 65000 A in steps of 1
	⇩	PHASE CT F1 SECONDARY: 1 A	Range: 1 A, 5 A
	⇩	GROUND CT F1 PRIMARY: 1 A	Range: 1 to 65000 A in steps of 1
	⇩	GROUND CT F1 SECONDARY: 1 A	Range: 1 A, 5 A

Six banks of phase and ground CTs can be set, where the current banks are denoted in the following format (X represents the module slot position letter):

Xa, where X = {F, L, S} and a = {1, 5}

See the Introduction to AC Sources section at the beginning of this chapter for details.

These settings are critical for all features that have settings dependent on current measurements. When the relay is ordered, the CT module must be specified to include a standard or sensitive ground input. As the phase CTs are connected in wye (star), the calculated phasor sum of the three phase currents (IA + IB + IC = neutral current = 3I0) is used as the input for the neutral overcurrent elements. In addition, a zero-sequence (core balance) CT which senses current in all of the circuit primary conductors, or a CT in a neutral grounding conductor can also be used. For this configuration, the ground CT primary rating must be entered. To detect low level ground fault currents, the sensitive ground input can be used. In this case, the sensitive ground CT primary rating must be entered. See chapter 3 for more details on CT connections.

Enter the rated CT primary current values. For both 1000:5 and 1000:1 CTs, the entry would be 1000. For correct operation, the CT secondary rating must match the setting (which must also correspond to the specific CT connections used).

The following example illustrates how multiple CT inputs (current banks) are summed as one source current. Given the following current banks:

- F1: CT bank with 500:1 ratio
- F5: CT bank with 1000:1 ratio
- L1: CT bank with 800:1 ratio

The following rule applies:

$$SRC\ 1 = F1 + F5 + L1 \qquad \textbf{Eq. 5-4}$$

1 pu is the highest primary current. In this case, 1000 is entered and the secondary current from the 500:1 and 800:1 ratio CTs are adjusted to that created by a 1000:1 CT before summation. If a protection element is set up to act on SRC 1 currents, then a pickup level of 1 pu operates on 1000 A primary.

The same rule applies for current sums from CTs with different secondary taps (5 A and 1 A).

5.5.1.2 Voltage banks

SETTINGS ⇨⇩ SYSTEM SETUP ⇨ AC INPUTS ⇨⇩ VOLTAGE BANK F5(S5)

■ VOLTAGE BANK F5 ■	⇔	PHASE VT F5 CONNECTION: Wye	Range: Wye, Delta
	⇩	PHASE VT F5 SECONDARY: 66.4 V	Range: 25.0 to 240.0 V in steps of 0.1

⇕	**PHASE VT F5 RATIO: 1.00 :1**	Range: 1.00 to 24000.00 in steps of 0.01
⇕	**AUXILIARY VT F5 CONNECTION: Vag**	Range: Vn, Vag, Vbg, Vcg, Vab, Vbc, Vca
⇕	**AUXILIARY VT F5 SECONDARY: 66.4 V**	Range: 25.0 to 240.0 V in steps of 0.1
⇧	**AUXILIARY VT F5 RATIO: 1.00 :1**	Range: 1.00 to 24000.00 in steps of 0.01

Three banks of phase/auxiliary VTs can be set, where voltage banks are denoted in the following format (X represents the module slot position letter):

Xa, where X = {F, L, S} and a = {5}

See the Introduction to AC Sources section at the beginning of this chapter for details.

With VTs installed, the relay can perform voltage measurements as well as power calculations. Enter the **PHASE VT F5 CONNECTION** made to the system as "Wye" or "Delta." An open-delta source VT connection is entered as "Delta."

NOTE

The nominal **PHASE VT F5 SECONDARY** voltage setting is the voltage across the relay input terminals when nominal voltage is applied to the VT primary.

For example, on a system with a 13.8 kV nominal primary voltage and with a 14400:120 volt VT in a delta connection, the secondary voltage is 115; that is, (13800 / 14400) × 120. For a wye connection, the voltage value entered must be the phase to neutral voltage, which is 115 / $\sqrt{3}$ = 66.4.

On a 14.4 kV system with a delta connection and a VT primary to secondary turns ratio of 14400:120, the voltage value entered is 120; that is, 14400 / 120.

5

5.5.2 Power system

SETTINGS ⇨⇩ SYSTEM SETUP ⇨⇩ POWER SYSTEM

■ **POWER SYSTEM** ■	⇔	**NOMINAL FREQUENCY: 60 Hz**	Range: 25 to 60 Hz in steps of 1
	⇕	**PHASE ROTATION: ABC**	Range: ABC, ACB
	⇕	**FREQUENCY AND PHASE REFERENCE: SRC 1**	Range: SRC 1, SRC 2, SRC 3, SRC 4, SRC 5, SRC 6
	⇧	**FREQUENCY TRACKING: Enabled**	Range: Disabled, Enabled

The power system **NOMINAL FREQUENCY** value is used as a default to set the digital sampling rate if the system frequency cannot be measured from available signals. This can happen if the signals are not present or are heavily distorted. Before reverting to the nominal frequency, the frequency tracking algorithm holds the last valid frequency measurement for a safe period of time while waiting for the signals to reappear or for the distortions to decay. After changing this setting, restart the relay using **Maintenance > Reboot Relay Command**.

The phase sequence of the power system is required to properly calculate sequence components and power parameters. The **PHASE ROTATION** setting matches the power system phase sequence and informs the relay of the actual system phase sequence, either ABC or ACB. CT and VT inputs on the relay, labeled as A, B, and C, must be connected to system phases A, B, and C for correct operation.

The **FREQUENCY AND PHASE REFERENCE** setting determines which signal source is used (and hence which AC signal) for phase angle reference. The AC signal used is prioritized based on the AC inputs configured for the signal source. Phase voltages takes precedence, followed by auxiliary voltage, then phase currents, and finally ground current.

For three phase selection, phase A is used for angle referencing ($V_{ANGLE\ REF} = V_A$), while Clarke transformation of the phase signals is used for frequency metering and tracking ($V_{FREQUENCY} = (2V_A - V_B - V_C) / 3$) for better performance during fault, open pole, and VT and CT fail conditions.

The phase reference and frequency tracking AC signals are selected based upon the source configuration, regardless of whether or not a particular signal is actually applied to the relay.

Phase angle of the reference signal always displays zero degrees and all other phase angles are relative to this signal. If the pre-selected reference signal is not measurable at a given time, the phase angles are not referenced.

The phase angle referencing is done via a phase locked loop, which can synchronize independent UR-series relays if they have the same AC signal reference. This results in very precise correlation of phase angle indications between different UR-series relays.

FREQUENCY TRACKING is set to "Disabled" only in unusual circumstances; consult GE Grid Solutions for special variable-frequency applications.

NOTE The frequency tracking feature functions only when the B30 is in the "Programmed" mode. If the B30 is "Not Programmed," then metering values are available but can exhibit significant errors.

5.5.3 Signal sources

SETTINGS ⇨⇩ SYSTEM SETUP ⇨⇩ SIGNAL SOURCES ⇨ SOURCE 1(6)

5

■ **SOURCE 1** ■	⇔	**SOURCE 1 NAME:** **SRC 1**	Range: up to 20 alphanumeric characters
	⇩	**SOURCE 1 PHASE CT:** **None**	Range: None, F1,... up to any 6 CTs. Only Phase CT inputs are displayed.
	⇩	**SOURCE 1 GROUND CT:** **None**	Range: None, F1,... up to any 6 CTs. Only Ground CT inputs are displayed.
	⇩	**SOURCE 1 PHASE VT:** **None**	Range: None, S5 Only phase voltage inputs are displayed
	⇧	**SOURCE 1 AUX VT:** **None**	Range: None, S5 Only auxiliary voltage inputs are displayed

Identical menus are available for each source. The "SRC 1" text can be replaced by with a user-defined name appropriate for the associated source.

The first letter in the source identifier represents the module slot position. The number directly following this letter represents either the first bank of four channels (1, 2, 3, 4) called "1" or the second bank of four channels (5, 6, 7, 8) called "5" in a particular CT/VT module. See the Introduction to AC Sources section at the beginning of this chapter for details.

It is possible to select the sum of all CT combinations. The first channel displayed is the CT to which all others are referred. For example, the selection "F1+F5" indicates the sum of each phase from channels "F1" and "F5," scaled to whichever CT has the higher ratio. Selecting "None" hides the associated actual values.

The approach used to configure the AC sources consists of several steps; first step is to specify the information about each CT and VT input. For CT inputs, this is the nominal primary and secondary current. For VTs, this is the connection type, ratio and nominal secondary voltage. Once the inputs have been specified, the configuration for each source is entered, including specifying which CTs are summed together.

5.5.3.1 User selection of AC parameters for comparator elements

CT/VT modules automatically calculate all current and voltage parameters from the available inputs. Users must select the specific input parameters to be measured by every element in the relevant settings menu. The internal design of the element specifies which type of parameter to use and provides a setting for source selection. In elements where the parameter can be either fundamental or RMS magnitude, such as phase time overcurrent, two settings are provided. One setting specifies the source, the second setting selects between fundamental phasor and RMS.

5.5.3.2 AC input actual values

The calculated parameters associated with the configured voltage and current inputs are displayed in the current and voltage sections of actual values. Only the phasor quantities associated with the actual AC physical input channels display here. All parameters contained within a configured source are displayed in the sources section of the actual values.

5.5.3.3 Disturbance detectors (internal)

The disturbance detector (ANSI 50DD) element is a sensitive current disturbance detector that detects any disturbance on the protected system. The 50DD function is used directly in some elements in the relay, for example VT Fuse Failure detector or Fault Report. It can also be used to supervise current-based elements to prevent maloperation as a result of the wrong settings or external CT wiring problem. A disturbance detector is provided for each source.

The 50DD function responds to the changes in magnitude of the sequence currents. The disturbance detector logic is as follows.

Figure 5-58: Disturbance detector logic

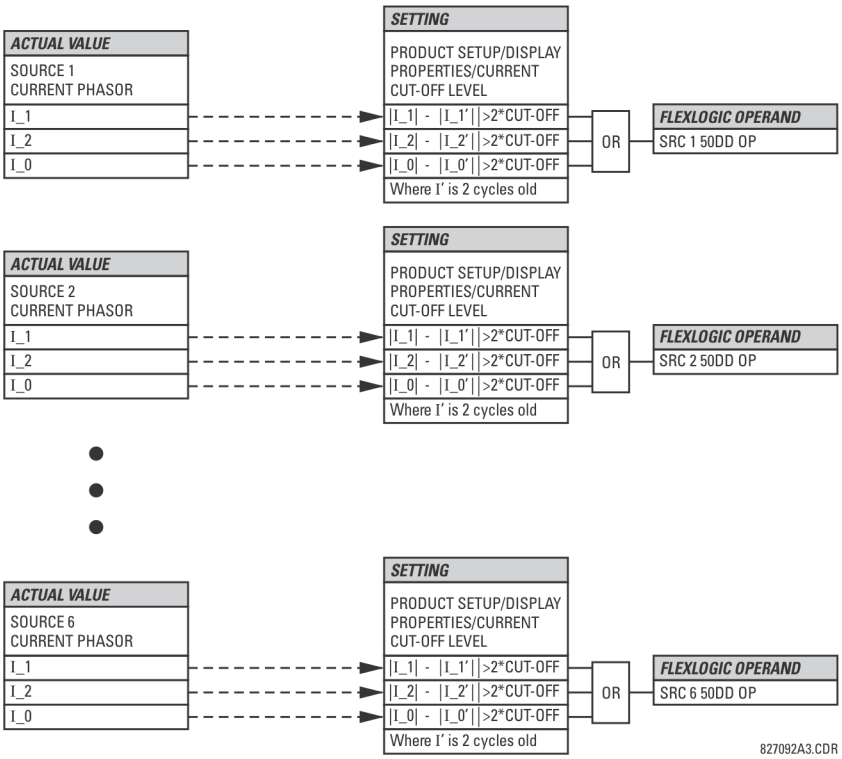

The disturbance detector responds to the change in currents of twice the current cut-off level. The default cut-off threshold is 0.02 pu; thus by default the disturbance detector responds to a change of 0.04 pu. The metering sensitivity setting (**PRODUCT SETUP ⇨⇩ DISPLAY PROPERTIES ⇨⇩ CURRENT CUT-OFF LEVEL**) controls the sensitivity of the disturbance detector accordingly.

5.5.3.4 Example for use of sources

An example of the use of sources is shown in the following figure. A relay can have the following hardware configuration:

	Increasing slot position letter -->		
UR	**CT/VT module 1**	**CT/VT module 2**	**CT/VT module 3**
B30, B90, C70, F35, N60, T35	8 CTs	4 CTs, 4 VTs	4 CTs, 4 VTs
C60, D60, G30, G60, L30, L90, M60, T60	CTs	VTs	not applicable

This configuration can be used on a two-winding transformer, with one winding connected into a breaker-and-a-half system. The following figure shows the arrangement of sources used to provide the functions required in this application, and the CT/VT inputs that are used to provide the data.

Figure 5-59: Example of use of sources

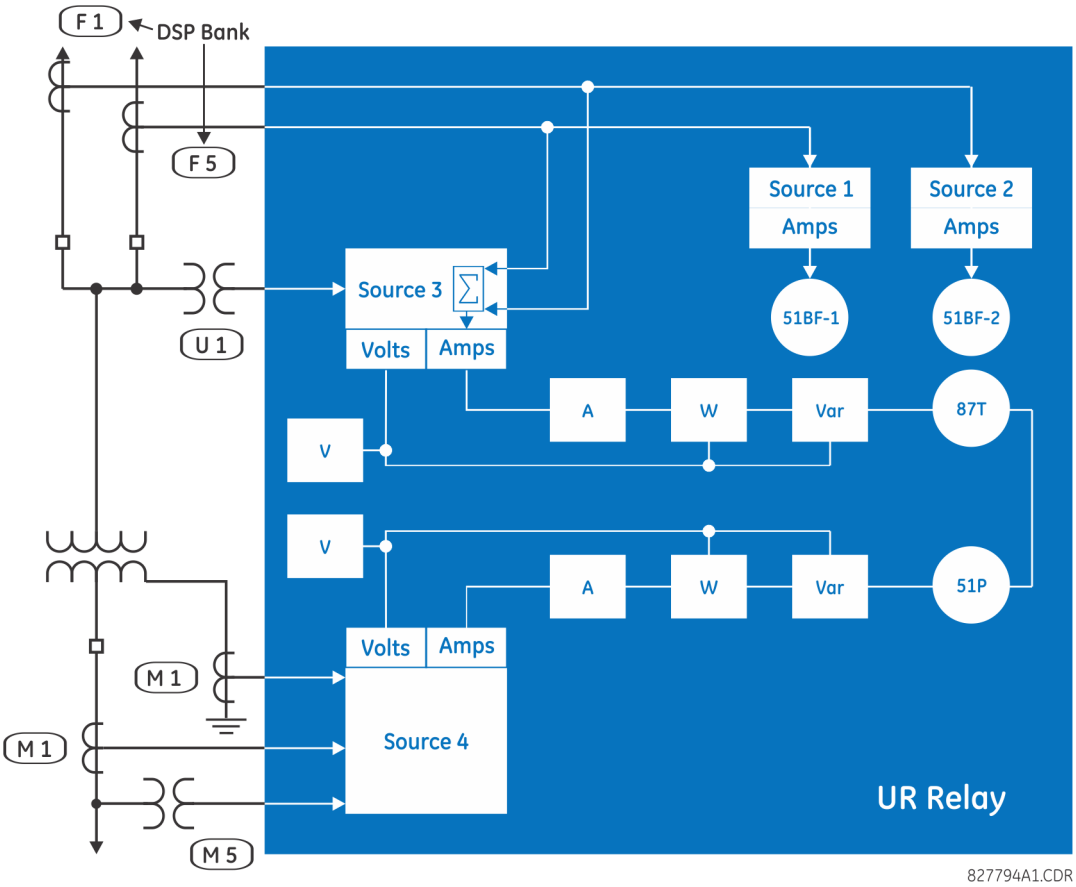

	Y LV	D HV	AUX
	SRC 1	SRC 2	SRC 3
Phase CT	M1	F1+F5	None
Ground CT	M1	None	None
Phase VT	M5	None	None
Aux VT	None	None	U1

5.5.4 Breakers

SETTINGS ⇨⇩ SYSTEM SETUP ⇨⇩ BREAKERS ⇨ BREAKER 1(6)

■ BREAKER 1 ■	⇔	BREAKER 1 FUNCTION: Disabled	Range: Disabled, Enabled
	⇩	BREAKER1 PUSH BUTTON CONTROL: Disabled	Range: Disabled, Enabled
	⇩	BREAKER 1 NAME: Bkr 1	Range: up to six alphanumeric characters

⇕	**BREAKER 1 MODE:** **3-Pole**	Range: 3-Pole, 1-Pole
⇕	**BREAKER 1 OPEN:** **Off**	Range: FlexLogic operand
⇕	**BREAKER 1 BLK OPEN:** **Off**	Range: FlexLogic operand
⇕	**BREAKER 1 CLOSE:** **Off**	Range: FlexLogic operand
⇕	**BREAKER 1 BLK CLOSE:** **Off**	Range: FlexLogic operand
⇕	**BREAKER1 ΦA/3P CLSD:** **Off**	Range: FlexLogic operand
⇕	**BREAKER1 ΦA/3P OPND:** **Off**	Range: FlexLogic operand
⇕	**BREAKER 1 ΦB CLOSED:** **Off**	Range: FlexLogic operand
⇕	**BREAKER 1 ΦB OPENED:** **Off**	Range: FlexLogic operand
⇕	**BREAKER 1 ΦC CLOSED:** **Off**	Range: FlexLogic operand
⇕	**BREAKER 1 ΦC OPENED:** **Off**	Range: FlexLogic operand
⇕	**BREAKER 1 TOPERATE:** **70 ms**	Range: 0 to 65535 s in steps of 1
⇕	**BREAKER 1 EXT ALARM:** **Off**	Range: FlexLogic operand
⇕	**BREAKER 1 ALARM** **DELAY: 0.000 s**	Range: 0.000 to 65.535 s in steps of 0.001
⇕	**MANUAL CLOSE RECAL1** **TIME: 0.000 s**	Range: 0.000 to 65.535 s in steps of 0.001
⇕	**BREAKER 1 OUT OF SV:** **Off**	Range: FlexLogic operand
⇧	**BREAKER 1 EVENTS:** **Disabled**	Range: Disabled, Enabled

A description of the operation of the breaker control and status monitoring features is provided in chapter 4. Information to program the settings is covered here. These features are provided for two or more breakers; a user can use only those portions of the design relevant to a single breaker, which must be breaker 1.

The number of breaker control elements depends on the number of CT/VT modules specified with the B30. The following settings are available for each breaker control element.

BREAKER 1 FUNCTION — This setting enables and disables the operation of the breaker control feature.

BREAKER1 PUSH BUTTON CONTROL — Set to "Enable" to allow faceplate pushbutton operations.

BREAKER 1 NAME — Assign a user-defined name (up to six characters) to the breaker. This name is used in flash messages related to breaker 1.

BREAKER 1 MODE — Selects "3-Pole" mode, where all breaker poles are operated simultaneously, or "1-Pole" mode where all breaker poles are operated either independently or simultaneously.

BREAKER 1 OPEN — Selects an operand that creates a programmable signal to operate an output relay to open breaker 1.

BREAKER 1 BLK OPEN — Selects an operand that prevents opening of the breaker. This setting can be used for select-before-operate functionality or to block operation from a panel switch or from SCADA.

BREAKER 1 CLOSE — Selects an operand that creates a programmable signal to operate an output relay to close breaker 1.

BREAKER 1 BLK CLOSE — Selects an operand that prevents closing of the breaker. This setting can be used for select-before-operate functionality or to block operation from a panel switch or from SCADA.

BREAKER1 ΦA/3P CLOSED — Selects an operand, usually a contact input connected to a breaker auxiliary position tracking mechanism. This input is a normally-open 52/a status input to create a logic 1 when the breaker is closed. If the **BREAKER 1 MODE** setting is selected as "3-Pole," this setting selects a single input as the operand used to track the breaker open or closed position. If the mode is selected as "1-Pole," the input mentioned is used to track phase A and the **BREAKER 1 ΦB** and **BREAKER 1 ΦC** settings select operands to track phases B and C, respectively.

BREAKER1 ΦA/3P OPND — Selects an operand, usually a contact input, that is a normally-closed 52/b status input to create a logic 1 when the breaker is open. If a separate 52/b contact input is not available, then the inverted BREAKER 1 CLOSED status signal can be used.

BREAKER 1 ΦB CLOSED — If the mode is selected as three-pole, this setting has no function. If the mode is selected as single-pole, this input is used to track the breaker phase B closed position as outlined for phase A.

BREAKER 1 ΦB OPENED — If the mode is selected as three-pole, this setting has no function. If the mode is selected as single-pole, this input is used to track the breaker phase B opened position as outlined for phase A.

BREAKER 1 ΦC CLOSED — If the mode is selected as three-pole, this setting has no function. If the mode is selected as single-pole, this input is used to track the breaker phase C closed position as outlined for phase A.

BREAKER 1 ΦC OPENED — If the mode is selected as three-pole, this setting has no function. If the mode is selected as single-pole, this input is used to track the breaker phase C opened position as outlined for phase A.

BREAKER 1 Toperate — This setting specifies the required interval to overcome transient disagreement between the 52/a and 52/b auxiliary contacts during breaker operation. If transient disagreement still exists after this time has expired, the BREAKER 1 BAD STATUS FlexLogic operand is asserted from alarm or blocking purposes.

BREAKER 1 EXT ALARM — This setting selects an operand, usually an external contact input, connected to a breaker alarm reporting contact.

BREAKER 1 ALARM DELAY — This setting specifies the delay interval during which a disagreement of status among the three-pole position tracking operands does not declare a pole disagreement. This allows for non-simultaneous operation of the poles.

MANUAL CLOSE RECAL1 TIME — This setting specifies the interval required to maintain setting changes in effect after an operator has initiated a manual close command to operate a circuit breaker.

BREAKER 1 OUT OF SV — Selects an operand indicating that breaker 1 is out-of-service.

NOTE

IEC 61850 functionality is permitted when the B30 is in "Programmed" mode and not in local control mode.

Figure 5-60: Dual breaker control logic (Sheet 1 of 2)

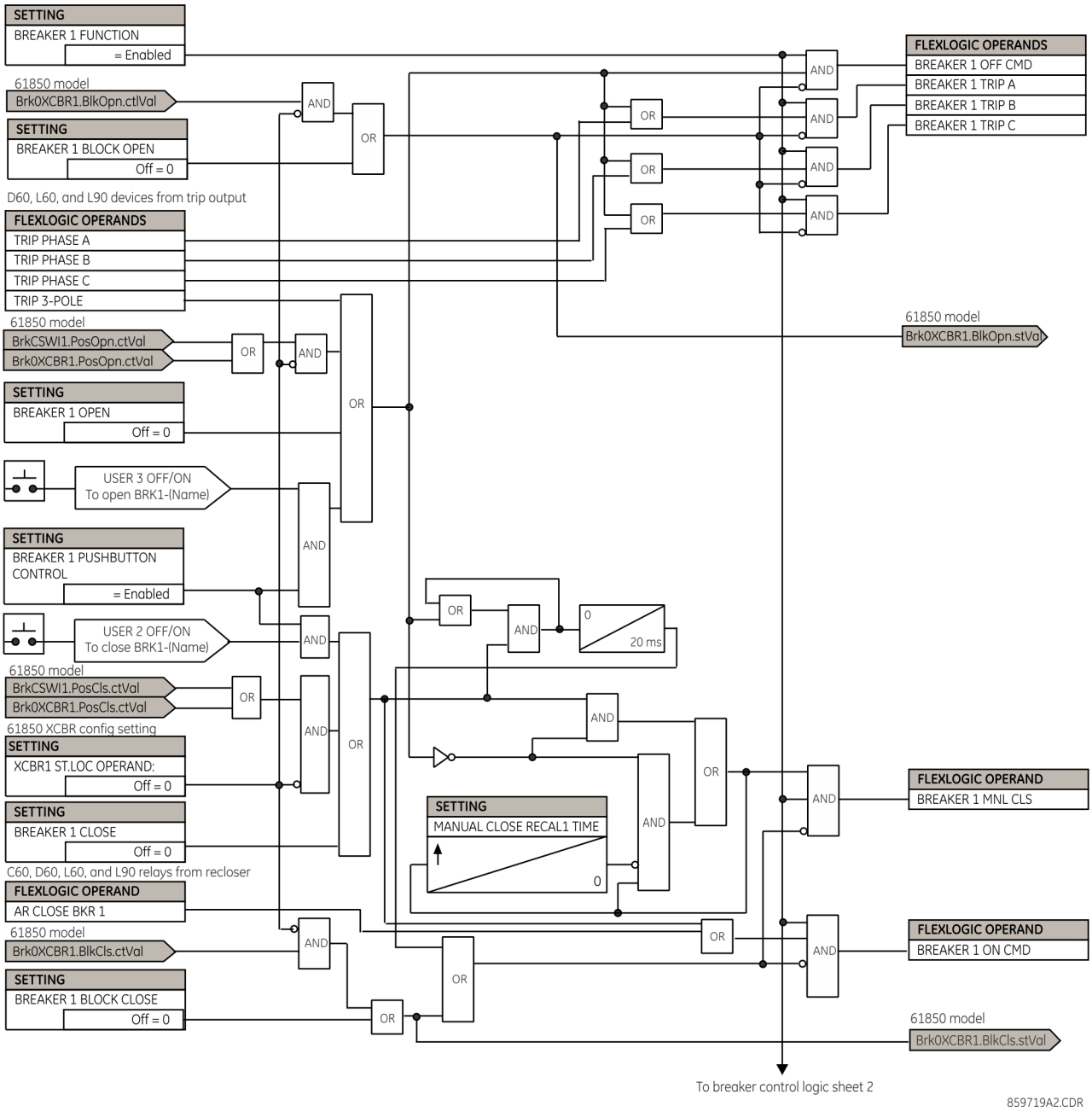

Figure 5-61: Dual breaker control logic (Sheet 2 of 2)

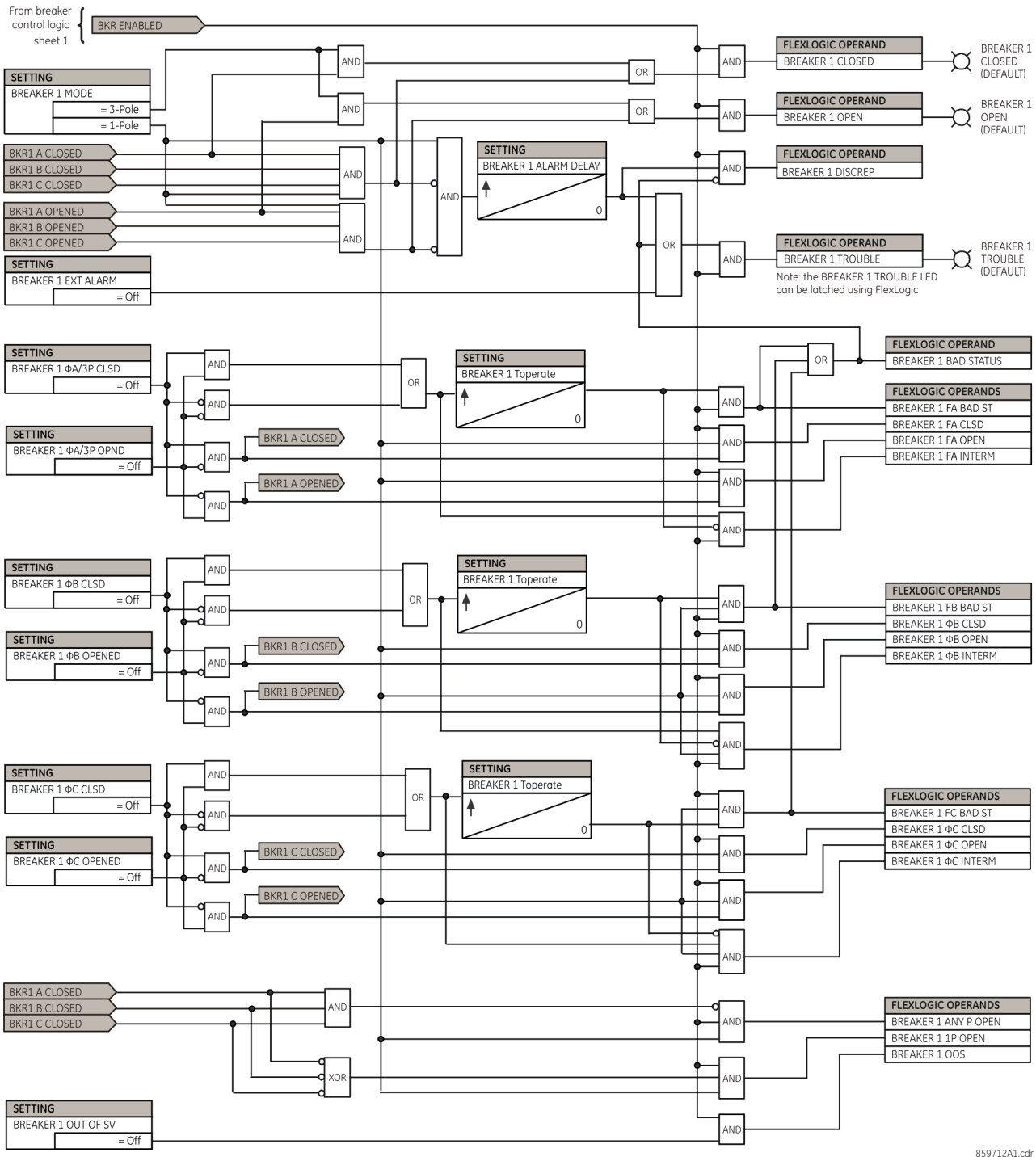

The breaker element has direct hard-coded connections to the IEC 61850 model as shown in the logic diagram. This allows remote open/close operation of each breaker, using either CSWI or XCBR IEC 61850 logical nodes. IEC 61850 select-before-operate functionality, local/remote switch functionality, along with blocking of open/close commands are provided. Note that the dwell time for the IEC 61850 trip and close commands shown is one protection pass only. To maintain the close/open command for a certain time, do so on the contact outputs using the "Seal-in" setting, in the Trip Output element, or in FlexLogic.

5.5.5 Disconnect switches

SETTINGS ⇨⇩ SYSTEM SETUP ⇨⇩ SWITCHES ⇨⇩ SWITCH 1(24)

■ SWITCH 1 ■	⇔	SWITCH 1 FUNCTION: Disabled	Range: Disabled, Enabled
	⇩	SWITCH 1 NAME: SW 1	Range: up to six alphanumeric characters
	⇩	SWITCH 1 MODE: 3-Pole	Range: 3-Pole, 1-Pole
	⇩	SWITCH 1 OPEN: Off	Range: FlexLogic operand
	⇩	SWITCH 1 BLK OPEN: Off	Range: FlexLogic operand
	⇩	SWITCH 1 CLOSE: Off	Range: FlexLogic operand
	⇩	SWITCH 1 BLK CLOSE: Off	Range: FlexLogic operand
	⇩	SWTCH 1 ΦA/3P CLSD: Off	Range: FlexLogic operand
	⇩	SWTCH 1 ΦA/3P OPND: Off	Range: FlexLogic operand
	⇩	SWITCH 1 ΦB CLOSED: Off	Range: FlexLogic operand
	⇩	SWITCH 1 ΦB OPENED: Off	Range: FlexLogic operand
	⇩	SWITCH 1 ΦC CLOSED: Off	Range: FlexLogic operand
	⇩	SWITCH 1 ΦC OPENED: Off	Range: FlexLogic operand
	⇩	SWITCH 1 TOPERATE: 70 ms	Range: 0 to 65535 ms in steps of 1
	⇩	SWITCH 1 ALARM DELAY: 0.000 s	Range: 0.000 to 65.535 s in steps of 0.001
	⇧	SWITCH 1 EVENTS: Disabled	Range: Disabled, Enabled

The disconnect switch control element contains the auxiliary logic for status and serves as the interface for opening and closing of disconnect switches from SCADA or through the front panel interface. The disconnect switch control element can be used to create interlocking functionality. For greater security in determination of the switch pole position, both the 89/a and 89/b auxiliary contacts are used with reporting of the discrepancy between them. The number of available disconnect switches is four per breaker.

To use this element, configure the contact outputs that open and close the disconnect switch to use FlexLogic operands SWITCH 1 OFF CMD and SWITCH 1 ON CMD, and configure the disconnect switch control element's inputs as outlined here.

SWITCH 1 FUNCTION — This setting enables and disables operation of the disconnect switch element.

SWITCH 1 NAME — Assign a user-defined name (up to six characters) to the disconnect switch. This name is used in flash messages related to disconnect switch 1.

SWITCH 1 MODE — This setting selects "3-Pole" mode, where disconnect switch poles have a single common auxiliary switch, or "1-Pole" mode where each disconnect switch pole has its own auxiliary switch.

SWITCH 1 OPEN — This setting selects an operand that when activated, and unless blocked, initiates the disconnect switch 1 open command.

SWITCH 1 BLK OPEN — This setting selects an operand that prevents initiation of the disconnect switch 1 command. This setting can be used for blocking disconnect switch opening for instance when switchyard monitoring indicates current exceeding the switch's interrupting rating can be flowing through the switch.

SWITCH 1 CLOSE — This setting selects an operand that when activated, and unless blocked, initiates the disconnect switch 1 close command.

SWITCH 1 BLK CLOSE — This setting selects an operand that prevents initiation of disconnect switch 1 close commands. This setting can be used for blocking disconnect switch closing, for instance to prevent closing into a closed ground switch.

SWTCH 1 ΦA/3P CLSD — This setting selects an operand, usually a contact input connected to a disconnect switch auxiliary position tracking mechanism. This input is for a normally-open 89/a status input that creates a logic 1 when the disconnect switch is closed. If the **SWITCH 1 MODE** setting is selected as "3-Pole," this setting selects a single 89/a input as the operand used to track the disconnect switch open or closed position. If the mode is selected as "1-Pole," the input mentioned is used to track phase A and the **SWITCH 1 ΦB** and **SWITCH 1 ΦC** settings select operands to track phases B and C, respectively.

SWTCH 1 ΦA/3P OPND — This setting selects an operand, usually a contact input, that is for a normally-closed 89/b status input that creates a logic 1 when the disconnect switch is open. If a separate 89/b contact input is not available, then an inverted 89/a status signal can be used.

SWITCH 1 ΦB CLOSED — If the mode is selected as three-pole, this setting has no function. If the mode is selected as single-pole, this input is used to track the disconnect switch phase B closed position as outlined for phase A.

SWITCH 1 ΦB OPENED — If the mode is selected as three-pole, this setting has no function. If the mode is selected as single-pole, this input is used to track the disconnect switch phase B opened position as outlined for phase A.

SWITCH 1 ΦC CLOSED — If the mode is selected as three-pole, this setting has no function. If the mode is selected as single-pole, this input is used to track the disconnect switch phase C closed position as outlined for phase A.

SWITCH 1 ΦC OPENED — If the mode is selected as three-pole, this setting has no function. If the mode is selected as single-pole, this input is used to track the disconnect switch phase C opened position as outlined for phase A.

SWITCH 1 TOPERATE — This setting specifies the required interval to overcome transient disagreement between the 89/a and 89/b auxiliary contacts during disconnect switch operation. If transient disagreement still exists after this time has expired, the SWITCH 1 BAD STATUS FlexLogic operand is asserted for alarm or blocking purposes.

SWITCH 1 ALARM DELAY — This setting specifies the delay interval during which a disagreement of status among the pole position tracking operands do not declare a pole disagreement. This allows for non-simultaneous operation of the poles.

NOTE

IEC 61850 functionality is permitted when the B30 is in "Programmed" mode and not in local control mode.

Figure 5-62: Disconnect switch logic

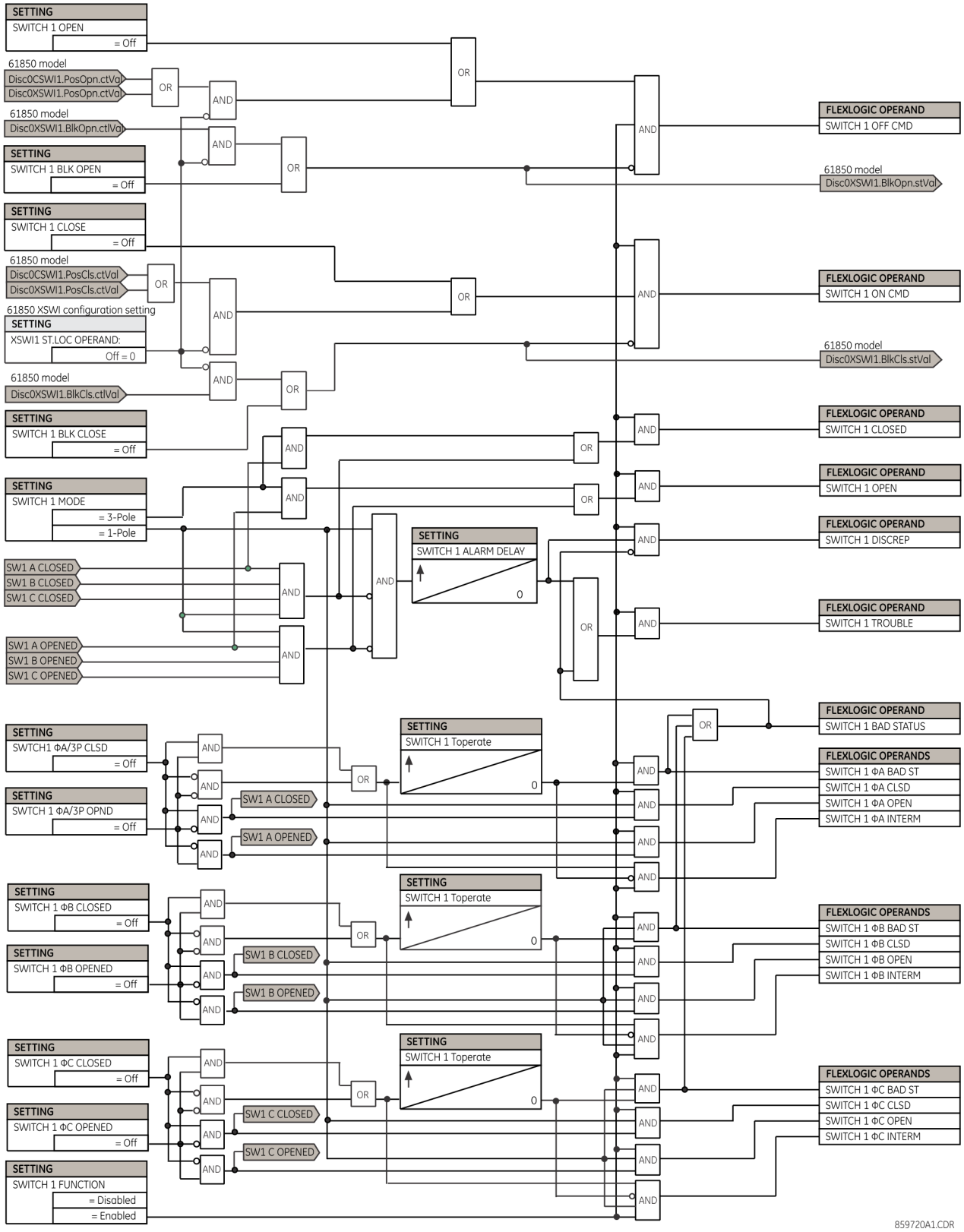

The switch element has direct hard-coded connections to the IEC 61850 model as shown in the logic diagram. This allows remote open/close operation of each switch, using either CSWI or XSWI IEC 61850 logical nodes. IEC 61850 select-before-operate functionality, local/remote switch functionality, along with blocking open/close commands are provided. Note that the dwell time for the IEC 61850 trip and close commands shown is one protection pass only. To maintain close/open command for a certain time, do so either on the contact outputs using the "Seal-in" setting or in FlexLogic.

5.5.6 FlexCurves

5.5.6.1 Settings

SETTINGS ⇨⇩ SYSTEM SETUP ⇨⇩ FLEXCURVES ⇨⇩ FLEXCURE A(D)

```
■ FLEXCURVE A          ⇔  FLEXCURVE A TIME AT
■                         0.00 xPKP:    0 ms      Range:  0 to 65535 ms in steps of 1

                       ⇩  FLEXCURVE A TIME AT
                          0.05 xPKP:    0 ms      Range:  0 to 65535 ms in steps of 1
                          ⇩
                       ⇧  FLEXCURVE A TIME AT
                          20.00xPKP:    0 ms      Range:  0 to 65535 ms in steps of 1
```

FlexCurves A through D have settings for entering times to reset and operate at the following pickup levels: 0.00 to 0.98 and 1.03 to 20.00. This data is converted into two continuous curves by linear interpolation between data points. To enter a custom FlexCurve, enter the reset and operate times (using the **VALUE** keys) for each selected pickup point (using the **MESSAGE** up/down keys) for the required protection curve (A, B, C, or D).

5

Table 5-17: FlexCurve table

Reset	Time ms	Reset	Time ms	Operate	Time ms	Operate	Time ms	Operate	Time ms	Operate	Time ms
0.00		0.68		1.03		2.9		4.9		10.5	
0.05		0.70		1.05		3.0		5.0		11.0	
0.10		0.72		1.1		3.1		5.1		11.5	
0.15		0.74		1.2		3.2		5.2		12.0	
0.20		0.76		1.3		3.3		5.3		12.5	
0.25		0.78		1.4		3.4		5.4		13.0	
0.30		0.80		1.5		3.5		5.5		13.5	
0.35		0.82		1.6		3.6		5.6		14.0	
0.40		0.84		1.7		3.7		5.7		14.5	
0.45		0.86		1.8		3.8		5.8		15.0	
0.48		0.88		1.9		3.9		5.9		15.5	
0.50		0.90		2.0		4.0		6.0		16.0	
0.52		0.91		2.1		4.1		6.5		16.5	
0.54		0.92		2.2		4.2		7.0		17.0	
0.56		0.93		2.3		4.3		7.5		17.5	
0.58		0.94		2.4		4.4		8.0		18.0	
0.60		0.95		2.5		4.5		8.5		18.5	
0.62		0.96		2.6		4.6		9.0		19.0	
0.64		0.97		2.7		4.7		9.5		19.5	
0.66		0.98		2.8		4.8		10.0		20.0	

NOTE

The relay using a given FlexCurve applies linear approximation for times between the user-entered points. Take care when setting the two points that are close to the multiple of pickup of 1; that is, 0.98 pu and 1.03 pu. It is recommended to set the two times to a similar value, otherwise the linear approximation can result in undesired behavior for the operating quantity that is close to 1.00 pu.

5.5.6.2 FlexCurve configuration with EnerVista software

The EnerVista software allows for easy configuration and management of FlexCurves and their associated data points. Prospective FlexCurves can be configured from a selection of standard curves to provide the best approximate fit, then specific data points can be edited afterwards. Alternately, curve data can be imported from a specified file (.csv format) by selecting the EnerVista **Import Data From** setting (**Settings > System Setup > FlexCurves > FlexCurve**).

Curves and data can be exported, viewed, and cleared by clicking the appropriate buttons. FlexCurves are customized by editing the operating time (ms) values at pre-defined per-unit current multiples. Note that the pickup multiples start at zero (implying the "reset time"), operating time below pickup, and operating time above pickup.

5.5.6.3 Recloser curve editing

Recloser curve selection is special in that recloser curves can be shaped into a composite curve with a minimum response time and a fixed time above a specified pickup multiples. There are 41 recloser curve types supported. These definite operating times are useful to coordinate operating times, typically at higher currents and where upstream and downstream protective devices have different operating characteristics. The recloser curve configuration window shown here appears when the **Initialize From** setting in the EnerVista software is set to “Recloser Curve” and the **Initialize FlexCurve** button is clicked.

Figure 5-63: Recloser curve initialization

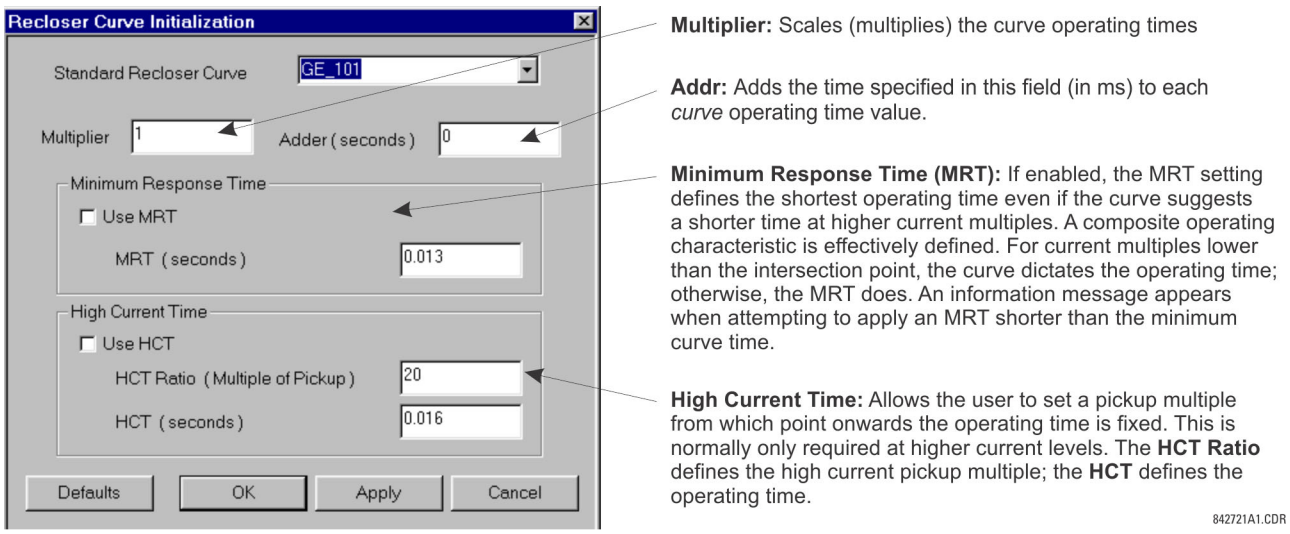

NOTE

The **Multiplier** and **Adder** settings only affect the curve portion of the characteristic and not the MRT and HCT settings. The HCT settings override the MRT settings for multiples of pickup greater than the HCT ratio.

5.5.6.4 Example

A composite curve can be created from the GE_111 standard with MRT = 200 ms and HCT initially disabled and then enabled at eight times pickup with an operating time of 30 ms. At approximately four times pickup, the curve operating time is equal to the MRT and from then onwards the operating time remains at 200 ms.

Figure 5-64: Composite recloser curve with HCT disabled

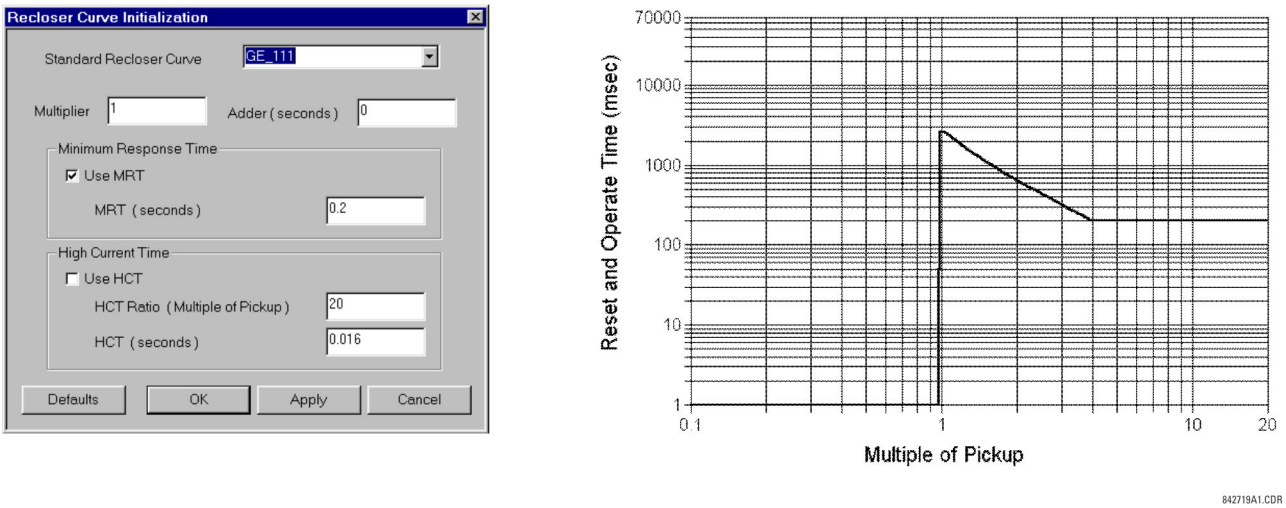

With the HCT feature enabled, the operating time reduces to 30 ms for pickup multiples exceeding eight times pickup.

Figure 5-65: Composite recloser curve with HCT enabled

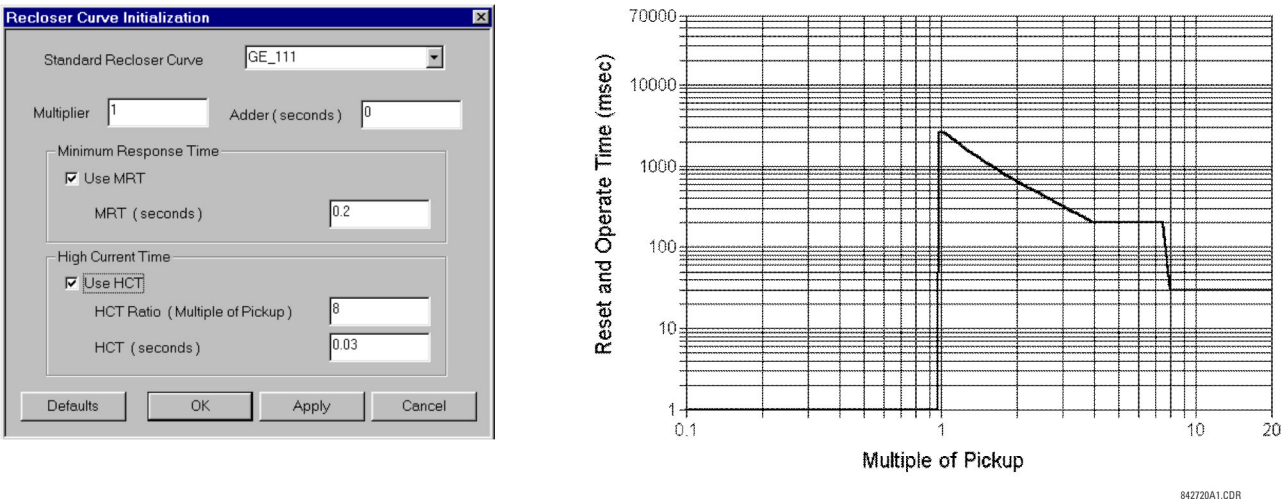

NOTE

Configuring a composite curve with an increase in operating time at increased pickup multiples is not allowed. If this is attempted, the EnerVista software generates an error message and discards the proposed changes.

5.5.6.5 Standard recloser curves

The following graphs display standard recloser curves available for the B30.

Figure 5-66: Recloser curves GE101 to GE106

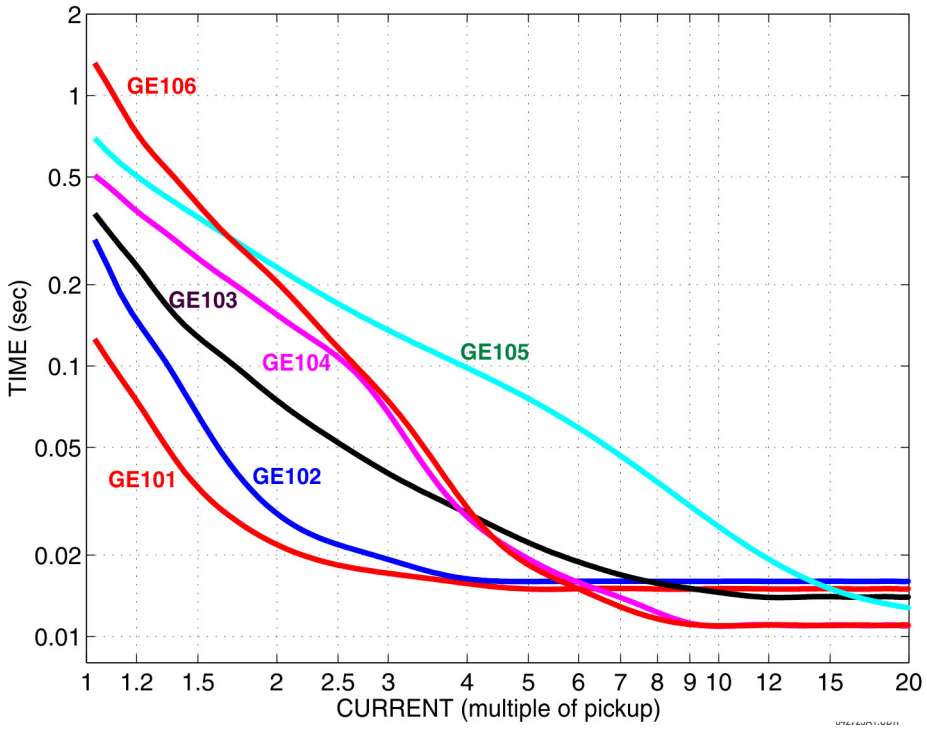

Figure 5-67: Recloser curves GE113, GE120, GE138, and GE142

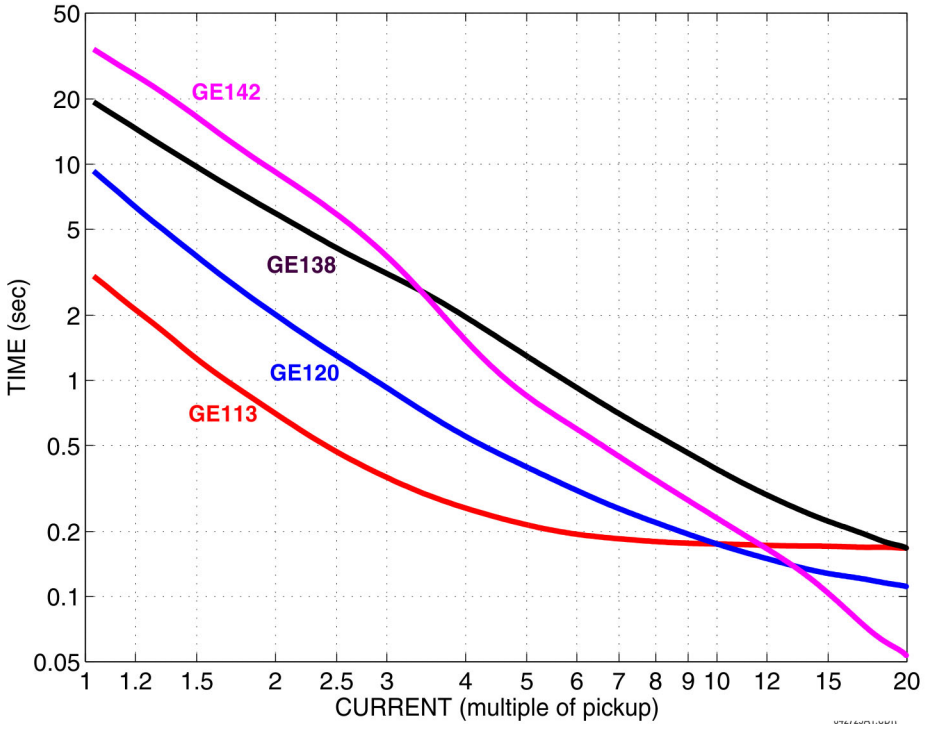

Figure 5-68: Recloser curves GE134, GE137, GE140, GE151, and GE201

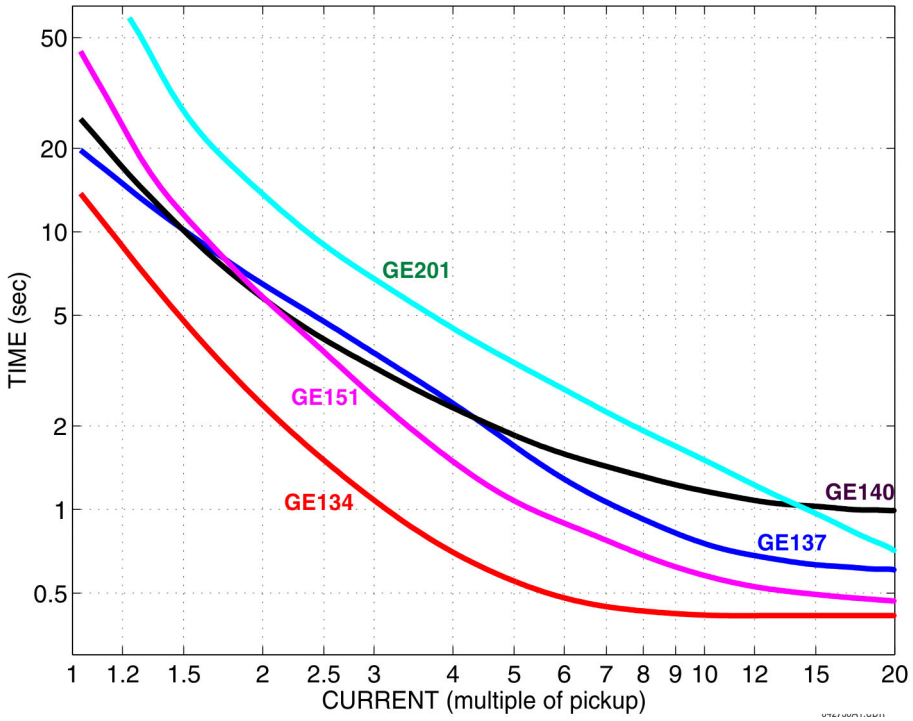

Figure 5-69: Recloser curves GE131, GE141, GE152, and GE200

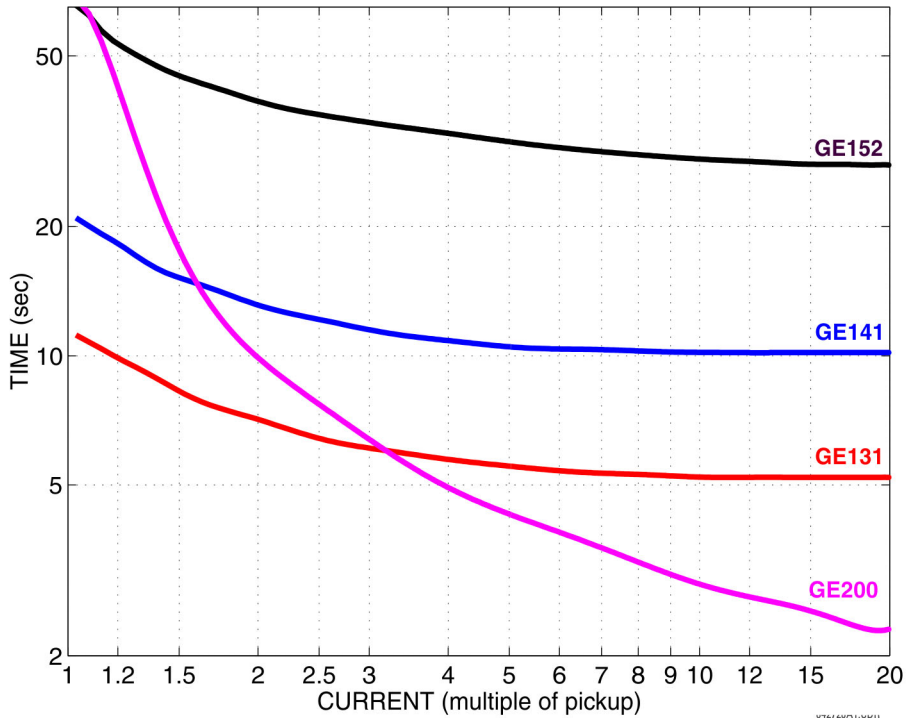

Figure 5-70: Recloser curves GE133, GE161, GE162, GE163, GE164, and GE165

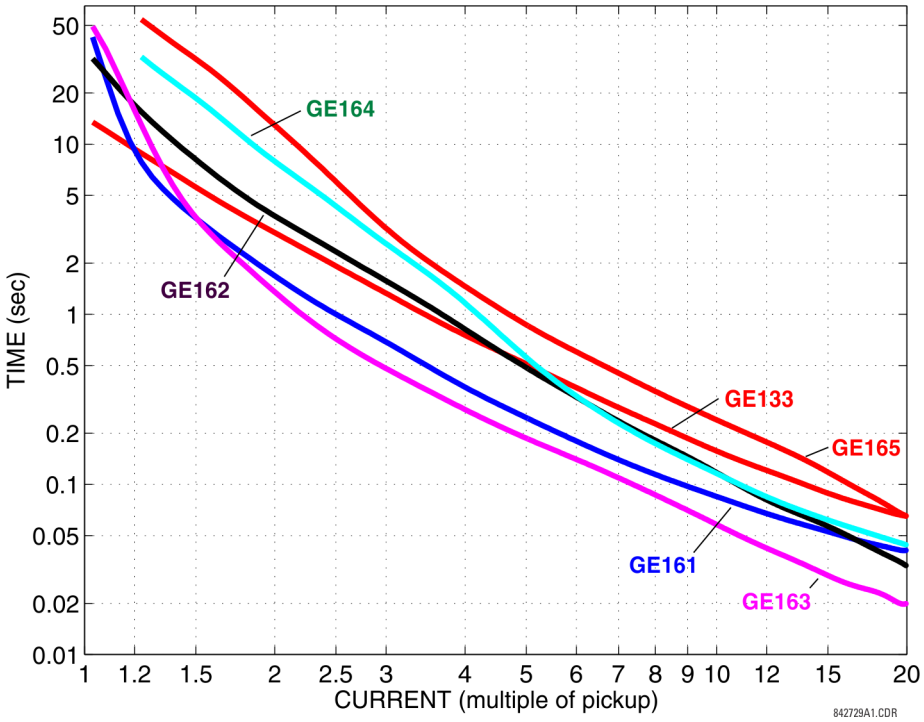

Figure 5-71: Recloser curves GE116, GE117, GE118, GE132, GE136, and GE139

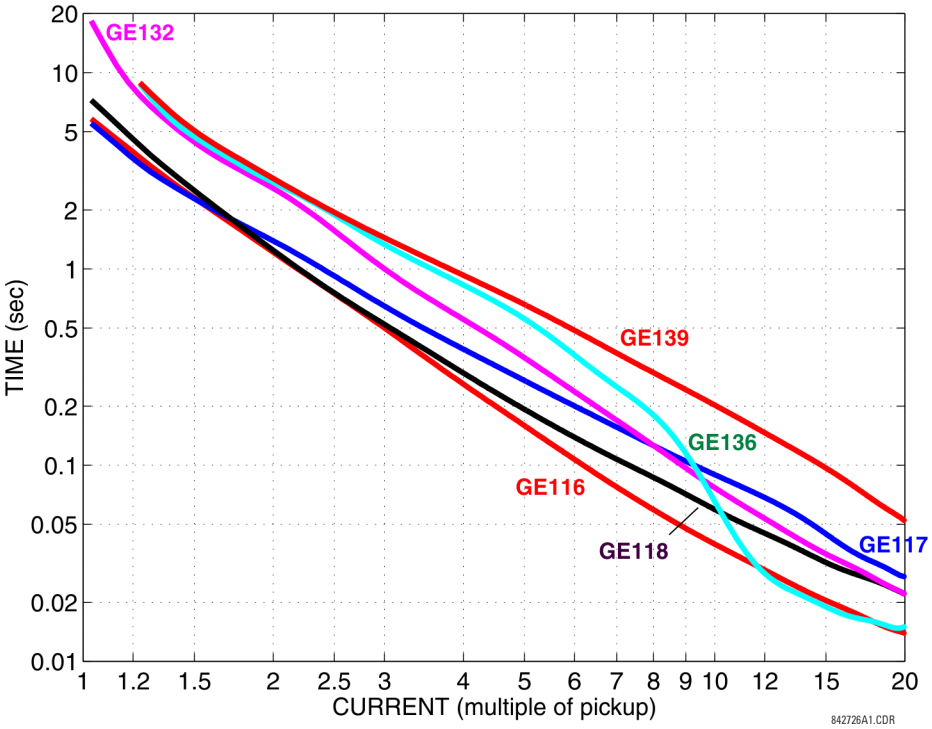

Figure 5-72: Recloser curves GE107, GE111, GE112, GE114, GE115, GE121, and GE122

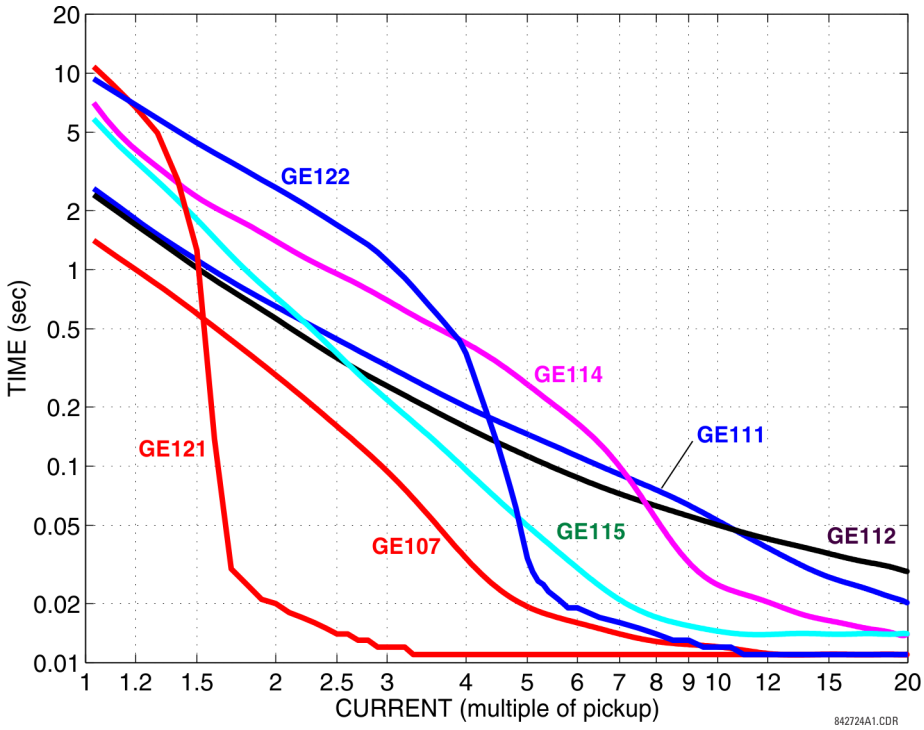

Figure 5-73: Recloser curves GE119, GE135, and GE202

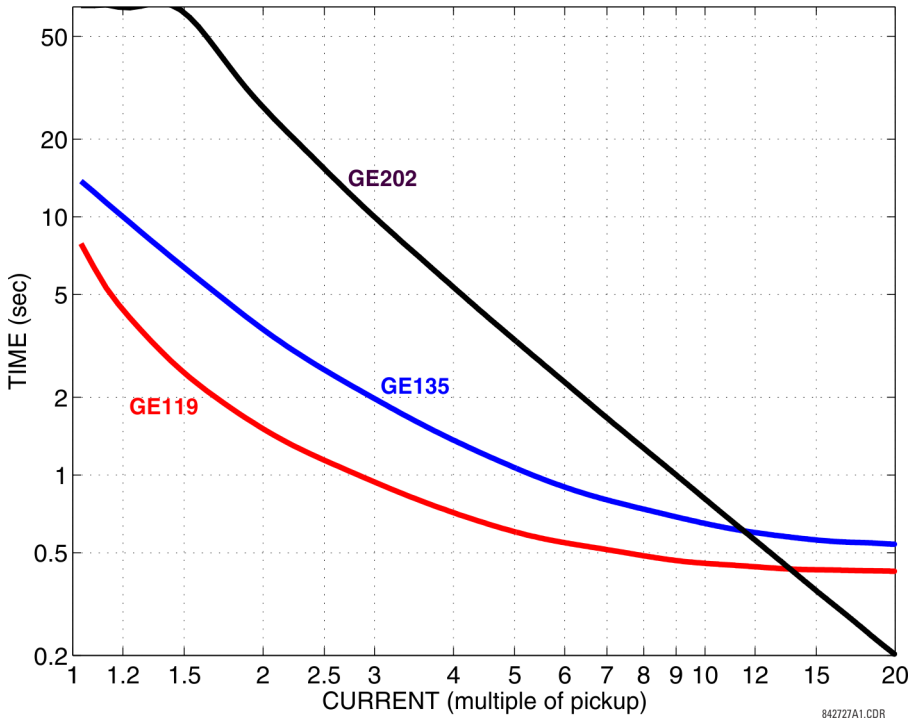

5.5.7 Bus

SETTINGS ⇨⇩ SYSTEM SETUP ⇨⇩ BUS ⇨ BUS ZONE 1(2)

■ **BUS ZONE 1** ■	⇔	**BUS ZONE 1A SOURCE:** **SRC 1**	Range: SRC 1, SRC 2, SRC 3, SRC 4, SRC 5, SRC 6
	⇩	**BUS ZONE 1B SOURCE:** **SRC 1**	Range: SRC 1, SRC 2, SRC 3, SRC 4, SRC 5, SRC 6
	⇩	**BUS ZONE 1C SOURCE:** **SRC 1**	Range: SRC 1, SRC 2, SRC 3, SRC 4, SRC 5, SRC 6
	⇩	**BUS ZONE 1D SOURCE:** **SRC 1**	Range: SRC 1, SRC 2, SRC 3, SRC 4, SRC 5, SRC 6
	⇩	**BUS ZONE 1E SOURCE:** **SRC 1**	Range: SRC 1, SRC 2, SRC 3, SRC 4, SRC 5, SRC 6
	⇩	**BUS ZONE 1F SOURCE:** **SRC 1**	Range: SRC 1, SRC 2, SRC 3, SRC 4, SRC 5, SRC 6
	⇩	**BUS ZONE 1A STATUS:** **Off**	Range: FlexLogic operand
	⇩	**BUS ZONE 1B STATUS:** **Off**	Range: FlexLogic operand
	⇩	**BUS ZONE 1C STATUS:** **Off**	Range: FlexLogic operand
	⇩	**BUS ZONE 1D STATUS:** **Off**	Range: FlexLogic operand
	⇩	**BUS ZONE 1E STATUS:** **Off**	Range: FlexLogic operand
	⇧	**BUS ZONE 1F STATUS:** **Off**	Range: FlexLogic operand

Two bus differential zones can be configured. The zone is associated with its own bus differential protection element and CT trouble monitoring element.

The bus differential zone is defined by providing the names of sources whose currents bound the differential zone (refer to settings **BUS ZONE 1A SOURCE** to **BUS ZONE 1F SOURCE**).

The connection status of a circuit with respect to the protected bus is dynamically provided by FlexLogic operands assigned to the **BUS ZONE 1A STATUS** to **BUS ZONE 1F STATUS** settings. The selected operand must be ON when the corresponding circuit is connected to the bus. The operands are selected from the contact inputs that reflect positions of particular circuit switches and/or breakers. If contact discrepancy filtering is needed, accomplish this using appropriate FlexLogic to form a Virtual Output, representing the current circuit status. If a given circuit (feeder) is fixed to the protected bus section and cannot be attached to any other bus section, then use the FlexLogic "ON" operand to represent fixed circuit status.

The status signal is meant to exclude a given current from the bus zone if the circuit is connected to a different bus section and its non-zero values upsets the current balance causing a spurious differential signal. Therefore, it is not required nor recommended to use the position of the breaker to control the status signal of a given circuit. If the breaker is opened, the circuit can remain included in the bus differential zone as the zero current values are measured and used when calculating the differential signal. Dynamically excluding or including a given current during the breaker operation can cause undesirable transients and race conditions for the relay algorithm.

If a given circuit cannot be connected to any other bus section different than the protected one, the FlexLogic constant "On" is recommended for the status signal.

5.6 FlexLogic

5.6.1 FlexLogic operands

For flexibility, the arrangement of internal digital logic combines fixed and user-programmed parameters. Logic upon which individual features are designed is fixed, and all other logic, from contact input signals through elements or combinations of elements to contact outputs, is variable. The user has complete control of all variable logic through FlexLogic. In general, the system receives analog and digital inputs that it uses to produce analog and digital outputs. The figure shows major subsystems of a generic UR-series relay involved in this process.

Figure 5-74: UR architecture overview

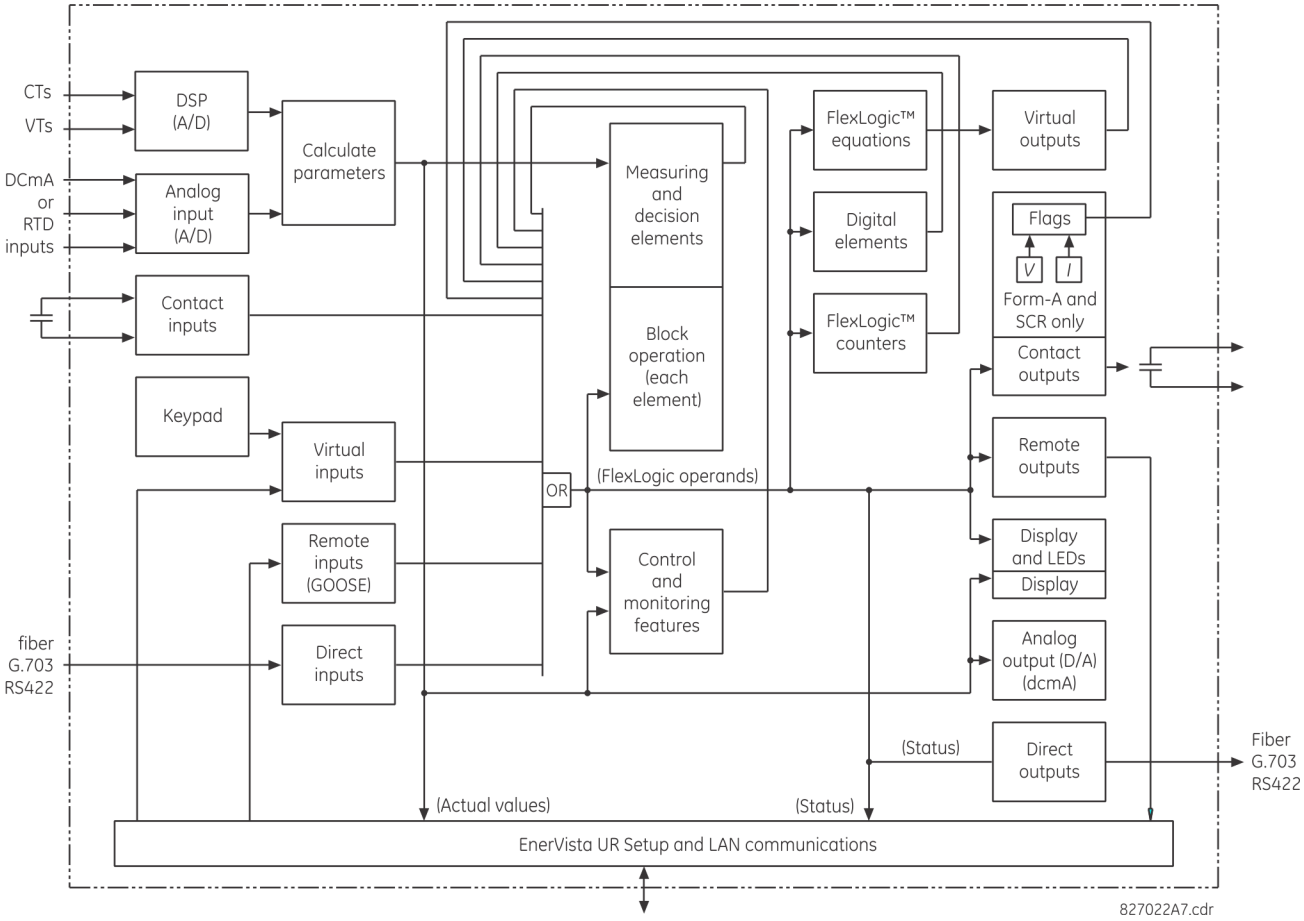

The states of all digital signals used in the B30 are represented by flags (or FlexLogic operands, which are described later in this section). A digital "1" is represented by a set flag. Any external contact change-of-state can be used to block an element from operating, as an input to a control feature in a FlexLogic equation, or to operate a contact output. The state of the contact input can be displayed locally or viewed remotely via the communications facilities provided. If a simple scheme where a contact input is used to block an element is wanted, this selection is made when programming the element. This capability also applies to the other features that set flags: elements, virtual inputs, remote inputs, schemes, and human operators.

If more complex logic than shown in the figure is required, it is implemented via FlexLogic. For example, to have the closed state of contact input H7a and the operated state of the phase undervoltage element block the operation of the phase time overcurrent element, the two control input states are programmed in a FlexLogic equation. This equation ANDs the two control inputs to produce a virtual output that is then selected when programming the phase time overcurrent to be used as a blocking input. Virtual outputs can only be created by FlexLogic equations.

Traditionally, protective relay logic has been relatively limited. Any unusual applications involving interlocks, blocking, or supervisory functions had to be hard-wired using contact inputs and outputs. FlexLogic minimizes the requirement for auxiliary components and wiring while making more complex schemes possible.

The logic that determines the interaction of inputs, elements, schemes, and outputs is field-programmable through the use of logic equations that are sequentially processed. The use of virtual inputs and outputs in addition to hardware is available internally and on the communication ports for other relays to use (distributed FlexLogic).

FlexLogic allows users to customize the relay through a series of equations that consist of operators and operands. The operands are the states of inputs, elements, schemes, and outputs. The operators are logic gates, timers, and latches (with set and reset inputs). A system of sequential operations allows any combination of operands to be assigned as inputs to specified operators to create an output. The final output of an equation is a numbered register called a virtual output. Virtual outputs can be used as an input operand in any equation, including the equation that generates the output, as a seal-in or other type of feedback.

A FlexLogic equation consists of parameters that are either operands or operators. Operands have a logic state of 1 or 0. Operators provide a defined function, such as an AND gate or a Timer. Each equation defines the combinations of parameters to be used to set a Virtual Output flag. Evaluation of an equation results in either a 1 (=ON, or flag set) or 0 (=OFF, or flag not set). Each equation is evaluated at least four times every power system cycle.

Some types of operands are present in the relay in multiple instances, for example contact and remote inputs. These types of operands are grouped together (for presentation purposes only) on the faceplate display. The table lists characteristics of the different types of operands.

Table 5-18: B30 FlexLogic operand types

Operand type	State	Example of format	Characteristics (Input Is '1' (= ON) if...)
Contact Input	On	Cont Ip On	Voltage is applied presently to the input (external contact closed)
	Off	Cont Ip Off	Voltage is not applied presently to the input (external contact open)
Contact Output (type Form-A contact only)	Contact Closed	Cont Op 1 Closed	Contact output is closed
	Current On	Cont Op 1 Ion	Current is flowing through the contact
	Voltage On	Cont Op 1 VOn	Voltage exists across the contact
	Voltage Off	Cont Op 1 VOff	Voltage does not exist across the contact
Direct Input	On	DIRECT INPUT 1 On	The direct input is presently in the ON state
Element (Analog)	Pickup	PHASE TOC1 PKP	The tested parameter is presently above the pickup setting of an element that responds to rising values or below the pickup setting of an element that responds to falling values
	Dropout	PHASE TOC1 DPO	This operand is the logical inverse of the above PKP operand
	Operate	PHASE TOC1 OP	The tested parameter has been above/below the pickup setting of the element for the programmed delay time, or has been at logic 1 and is now at logic 0 but the reset timer has not finished timing
	Block	PHASE TOC1 BLK	The output of the comparator is set to the block function
Element (Digital)	Pickup	Dig Element 1 PKP	The input operand is at logic 1
	Dropout	Dig Element 1 DPO	This operand is the logical inverse of the above PKP operand
	Operate	Dig Element 1 OP	The input operand has been at logic 1 for the programmed pickup delay time, or has been at logic 1 for this period and is now at logic 0 but the reset timer has not finished timing
Element (Digital Counter)	Higher than	Counter 1 HI	The number of pulses counted is above the set number
	Equal to	Counter 1 EQL	The number of pulses counted is equal to the set number
	Lower than	Counter 1 LO	The number of pulses counted is below the set number
Fixed	On	On	Logic 1
	Off	Off	Logic 0

Operand type	State	Example of format	Characteristics [Input Is '1' (= ON) if...]
RxGOOSE Boolean	On	RxGOOSE Boolean 1 On	The RxGOOSE Boolean is presently in the ON state
Virtual Input	On	Virt Ip 1 On	The virtual input is presently in the ON state
Virtual Output	On	Virt Op 1 On	The virtual output is presently in the set state (that is, evaluation of the equation that produces this virtual output results in a "1")

The following table lists the operands available for the relay. The operands can be viewed online by entering the IP address of the relay in a web browser and accessing the Device Information Menu.

Table 5-19: B30 FlexLogic operands

Operand type	Operand syntax	Operand description
CONTROL PUSHBUTTONS	CONTROL PUSHBTN 1 ON CONTROL PUSHBTN 2 ON CONTROL PUSHBTN 3 ON CONTROL PUSHBTN 4 ON CONTROL PUSHBTN 5 ON CONTROL PUSHBTN 6 ON CONTROL PUSHBTN 7 ON	Control pushbutton 1 is being pressed Control pushbutton 2 is being pressed Control pushbutton 3 is being pressed Control pushbutton 4 is being pressed Control pushbutton 5 is being pressed Control pushbutton 6 is being pressed Control pushbutton 7 is being pressed
CYBERSENTRY	ROLE ADMIN ACT ROLE SUPERVISOR ACT ROLE ENGINEER ACT ROLE OPERATOR ACT ROLE OBSERVER ACT AUTHENTICATION FAIL UNAUTH FW ATTEMPT UNAUTH SETTING WRITE	Administrator role is active and is set to true when that is the case Supervisor role is active and is set to true when that is the case Engineer role is active and is set to true when that is the case Operator role is active and is set to true when that is the case Observer role is active and is set to true when that is the case Operand set for Failed Authentication self-test and alarm Operand set for firmware lock self-test and alarm Operand set for settings lock self-test and alarm
DIRECT DEVICES	DIRECT DEVICE 1On ↓ DIRECT DEVICE 16On DIRECT DEVICE 1Off ↓ DIRECT DEVICE 16Off	Flag is set, logic=1 ↓ Flag is set, logic=1 Flag is set, logic=1 ↓ Flag is set, logic=1
DIRECT INPUT/ OUTPUT CHANNEL MONITORING	DIR IO CH1 CRC ALARM DIR IO CH2 CRC ALARM DIR IO CH1 UNRET ALM DIR IO CH2 UNRET ALM	The rate of direct input messages received on channel 1 and failing the CRC exceeded the user-specified level The rate of direct input messages received on channel 2 and failing the CRC exceeded the user-specified level The rate of returned direct input/output messages on channel 1 exceeded the user-specified level (ring configurations only) The rate of returned direct input/output messages on channel 2 exceeded the user-specified level (ring configurations only)
ELEMENT: Auxiliary overvoltage	AUX OV1 PKP AUX OV1 DPO AUX OV1 OP	Auxiliary overvoltage element has picked up Auxiliary overvoltage element has dropped out Auxiliary overvoltage element has operated
	AUX OV2 to 3	Same set of operands as shown for AUX OV1
ELEMENT: Breaker flashover	BKR 1 FLSHOVR PKP A BKR 1 FLSHOVR PKP B BKR 1 FLSHOVR PKP C BKR 1 FLSHOVR PKP BKR 1 FLSHOVR OP A BKR 1 FLSHOVR OP B BKR 1 FLSHOVR OP C BKR 1 FLSHOVR OP BKR 1 FLSHOVR DPO A BKR 1 FLSHOVR DPO B BKR 1 FLSHOVR DPO C BKR 1 FLSHOVR DPO	Breaker 1 flashover element phase A has picked up Breaker 1 flashover element phase B has picked up Breaker 1 flashover element phase C has picked up Breaker 1 flashover element has picked up Breaker 1 flashover element phase A has operated Breaker 1 flashover element phase B has operated Breaker 1 flashover element phase C has operated Breaker 1 flashover element has operated Breaker 1 flashover element phase A has dropped out Breaker 1 flashover element phase B has dropped out Breaker 1 flashover element phase C has dropped out Breaker 1 flashover element has dropped out
	BKR 2 FLSHOVR	Same set of operands as shown for BKR 1 FLSHOVR

Operand type	Operand syntax	Operand description
ELEMENT: Breaker arcing	BKR ARC 1 OP BKR ARC 1 DPO BKR ARC 1 MAX OP BKR ARC 1 MAX DPO BKR ARC 2 OP BKR ARC 2 DPO BKR ARC 2 MAX OP BKR ARC 2 MAX DPO	Breaker arcing current 1 has operated Breaker arcing current 1 has dropped out Breaker arcing current 1 max interrupting current has operated Breaker arcing current 1 max interrupting current has dropped out Breaker arcing current 2 has operated Breaker arcing current 2 has dropped out Breaker arcing current 2 max interrupting current has operated Breaker arcing current 2 max interrupting current has dropped out
	BKR ARC 3 to 6	Same set of operands as shown for BKR ARC 1
ELEMENT: Breaker failure	BKR FAIL 1 RETRIPA BKR FAIL 1 RETRIPB BKR FAIL 1 RETRIPC BKR FAIL 1 RETRIP BKR FAIL 1 T1 OP BKR FAIL 1 T2 OP BKR FAIL 1 T3 OP BKR FAIL 1 TRIP OP	Breaker failure 1 re-trip phase A (only for 1-pole schemes) Breaker failure 1 re-trip phase B (only for 1-pole schemes) Breaker failure 1 re-trip phase C (only for 1-pole schemes) Breaker failure 1 re-trip 3-phase Breaker failure 1 timer 1 is operated Breaker failure 1 timer 2 is operated Breaker failure 1 timer 3 is operated Breaker failure 1 trip is operated
	BKR FAIL 2 to 6	Same set of operands as shown for BKR FAIL 1
ELEMENT: Breaker restrike	BRK RESTRIKE 1 OP BRK RESTRIKE 1 OP A BRK RESTRIKE 1 OP B BRK RESTRIKE 1 OP C	Breaker restrike detected in any phase of the breaker control 1 element Breaker restrike detected in phase A of the breaker control 1 element Breaker restrike detected in phase B of the breaker control 1 element Breaker restrike detected in phase C of the breaker control 1 element
	BKR RESTRIKE 2 to 6	Same set of operands as shown for BKR RESTRIKE 1
ELEMENT: Breaker control	BREAKER 1 OFF CMD BREAKER 1 ON CMD BREAKER 1 ΦA BAD ST BREAKER 1 ΦA INTERM BREAKER 1 ΦA CLSD BREAKER 1 ΦA OPEN BREAKER 1 ΦB BAD ST BREAKER 1 ΦB INTERM BREAKER 1 ΦB CLSD BREAKER 1 ΦB OPEN BREAKER 1 ΦC BAD ST BREAKER 1 ΦC INTERM BREAKER 1 ΦC CLSD BREAKER 1 ΦC OPEN BREAKER 1 BAD STATUS BREAKER 1 CLOSED BREAKER 1 OPEN BREAKER 1 DISCREP BREAKER 1 TROUBLE BREAKER 1 MNL CLS BREAKER 1 TRIP A BREAKER 1 TRIP B BREAKER 1 TRIP C BREAKER 1 ANY P OPEN BREAKER 1 ONE P OPEN BREAKER 1 OOS	Breaker 1 open command initiated Breaker 1 close command initiated Breaker 1 phase A bad status is detected (discrepancy between the 52/a and 52/b contacts) Breaker 1 phase A intermediate status is detected (transition from one position to another) Breaker 1 phase A is closed Breaker 1 phase A is open Breaker 1 phase B bad status is detected (discrepancy between the 52/a and 52/b contacts) Breaker 1 phase B intermediate status is detected (transition from one position to another) Breaker 1 phase B is closed Breaker 1 phase B is open Breaker 1 phase C bad status is detected (discrepancy between the 52/a and 52/b contacts) Breaker 1 phase C intermediate status is detected (transition from one position to another) Breaker 1 phase C is closed Breaker 1 phase C is open Breaker 1 bad status is detected on any pole Breaker 1 is closed Breaker 1 is open Breaker 1 has discrepancy Breaker 1 trouble alarm Breaker 1 manual close Breaker 1 trip phase A command Breaker 1 trip phase B command Breaker 1 trip phase C command At least one pole of breaker 1 is open Only one pole of breaker 1 is open Breaker 1 is out of service
	BREAKER 2 to 6	Same set of operands as shown for BREAKER 1

Operand type	Operand syntax	Operand description
ELEMENT: Bus differential	BUS 1 OP BUS 1 DPO BUS 1 BIASED OP A BUS 1 BIASED OP B BUS 1 BIASED OP C BUS 1 BIASED PKP A BUS 1 BIASED PKP B BUS 1 BIASED PKP C BUS 1 UNBIASED OP A BUS 1 UNBIASED OP B BUS 1 UNBIASED OP C BUS 1 BIASED DPO A BUS 1 BIASED DPO B BUS 1 BIASED DPO C BUS 1 UNBIASED DPO A BUS 1 UNBIASED DPO B BUS 1 UNBIASED DPO C BUS 1 DIR A BUS 1 DIR B BUS 1 DIR C BUS 1 SAT A BUS 1 SAT B BUS 1 SAT C	At least one phase of the bus differential characteristic has operated At least one phase of the bus differential characteristic has dropped out Phase A biased differential function has operated Phase B biased differential function has operated Phase C biased differential function has operated Phase A biased differential function has picked up Phase B biased differential function has picked up Phase C biased differential function has picked up Phase A unbiased differential function has operated Phase B unbiased differential function has operated Phase C unbiased differential function has operated Phase A biased differential function has dropped out Phase B biased differential function has dropped out Phase C biased differential function has dropped out Phase A unbiased differential function has dropped out Phase B unbiased differential function has dropped out Phase C unbiased differential function has dropped out Phase A directional principle has picked up Phase B directional principle has picked up Phase C directional principle has picked up CT saturation is detected in phase A CT saturation is detected in phase B CT saturation is detected in phase C
	BUS 2	Same set of operands as shown for BUS 1
ELEMENT: CT trouble	CT TROUBLE1 OP CT TROUBLE1 OP A CT TROUBLE1 OP B CT TROUBLE1 OP C	At least one phase of CT Trouble Zone 1 is operated Phase A of CT trouble zone 1 has operated Phase B of CT trouble zone 1 has operated Phase C of CT trouble zone 1 has operated
	CT TROUBLE 2	Same set of operands as shown for CT TROUBLE 1
ELEMENT: Digital counters	Counter 1 HI Counter 1 EQL Counter 1 LO	Digital counter 1 output is 'more than' comparison value Digital counter 1 output is 'equal to' comparison value Digital counter 1 output is 'less than' comparison value
	Counter 2 to 8	Same set of operands as shown for Counter 1
ELEMENT: Digital elements	Dig Element 1 PKP Dig Element 1 OP Dig Element 1 DPO	Digital Element 1 is picked up Digital Element 1 is operated Digital Element 1 is dropped out
	Dig Element 2 to 48	Same set of operands as shown for Dig Element 1
ELEMENT: FlexElements	FxE 1 PKP FxE 1 OP FxE 1 DPO	FlexElement 1 has picked up FlexElement 1 has operated FlexElement 1 has dropped out
	FxE 2 to 8	Same set of operands as shown for FxE 1
ELEMENT: Ground instantaneous overcurrent	GROUND IOC1 PKP GROUND IOC1 OP GROUND IOC1 DPO	Ground instantaneous overcurrent 1 has picked up Ground instantaneous overcurrent 1 has operated Ground instantaneous overcurrent 1 has dropped out
	GROUND IOC2 to 6	Same set of operands as shown for GROUND IOC 1
ELEMENT: Ground time overcurrent	GROUND TOC1 PKP GROUND TOC1 OP GROUND TOC1 DPO	Ground time overcurrent 1 has picked up Ground time overcurrent 1 has operated Ground time overcurrent 1 has dropped out
	GROUND TOC2 to 6	Same set of operands as shown for GROUND TOC1
ELEMENT: Non-volatile latches	LATCH 1 ON LATCH 1 OFF	Non-volatile latch 1 is ON (Logic = 1) Non-volatile latch 1 is OFF (Logic = 0)
	LATCH 2 to 16	Same set of operands as shown for LATCH 1
ELEMENT: Neutral instantaneous overcurrent	NEUTRAL IOC1 PKP NEUTRAL IOC1 OP NEUTRAL IOC1 DPO	Neutral instantaneous overcurrent 1 has picked up Neutral instantaneous overcurrent 1 has operated Neutral instantaneous overcurrent 1 has dropped out
	NEUTRAL IOC2 to 6	Same set of operands as shown for NEUTRAL IOC1
ELEMENT: Neutral overvoltage	NEUTRAL OV1 PKP NEUTRAL OV1 DPO NEUTRAL OV1 OP	Neutral overvoltage element 1 has picked up Neutral overvoltage element 1 has dropped out Neutral overvoltage element 1 has operated

Operand type	Operand syntax	Operand description
	NEUTRAL OV2 to 3	Same set of operands as shown for NEUTRAL OV1
ELEMENT: Neutral time overcurrent	NEUTRAL TOC1 PKP NEUTRAL TOC1 OP NEUTRAL TOC1 DPO	Neutral time overcurrent 1 has picked up Neutral time overcurrent 1 has operated Neutral time overcurrent 1 has dropped out
	NEUTRAL TOC2 to 6	Same set of operands as shown for NEUTRAL TOC1
ELEMENT: Phase directional overcurrent	PH DIR1 BLK A PH DIR1 BLK B PH DIR1 BLK C PH DIR1 BLK	Phase A directional 1 block Phase B directional 1 block Phase C directional 1 block Phase directional 1 block
	PH DIR2	Same set of operands as shown for PH DIR1
ELEMENT: Phase instantaneous overcurrent	PHASE IOC1 PKP PHASE IOC1 OP PHASE IOC1 DPO PHASE IOC1 PKP A PHASE IOC1 PKP B PHASE IOC1 PKP C PHASE IOC1 OP A PHASE IOC1 OP B PHASE IOC1 OP C PHASE IOC1 DPO A PHASE IOC1 DPO B PHASE IOC1 DPO C	At least one phase of phase instantaneous overcurrent 1 has picked up At least one phase of phase instantaneous overcurrent 1 has operated All phases of phase instantaneous overcurrent 1 have dropped out Phase A of phase instantaneous overcurrent 1 has picked up Phase B of phase instantaneous overcurrent 1 has picked up Phase C of phase instantaneous overcurrent 1 has picked up Phase A of phase instantaneous overcurrent 1 has operated Phase B of phase instantaneous overcurrent 1 has operated Phase C of phase instantaneous overcurrent 1 has operated Phase A of phase instantaneous overcurrent 1 has dropped out Phase B of phase instantaneous overcurrent 1 has dropped out Phase C of phase instantaneous overcurrent 1 has dropped out
	PHASE IOC2 to 12	Same set of operands as shown for PHASE IOC1
ELEMENT: Phase overvoltage	PHASE OV1 PKP PHASE OV1 OP PHASE OV1 DPO PHASE OV1 PKP A PHASE OV1 PKP B PHASE OV1 PKP C PHASE OV1 OP A PHASE OV1 OP B PHASE OV1 OP C PHASE OV1 DPO A PHASE OV1 DPO B PHASE OV1 DPO C	At least one phase of overvoltage 1 has picked up At least one phase of overvoltage 1 has operated All phases of overvoltage 1 have dropped out Phase A of overvoltage 1 has picked up Phase B of overvoltage 1 has picked up Phase C of overvoltage 1 has picked up Phase A of overvoltage 1 has operated Phase B of overvoltage 1 has operated Phase C of overvoltage 1 has operated Phase A of overvoltage 1 has dropped out Phase B of overvoltage 1 has dropped out Phase C of overvoltage 1 has dropped out
	PHASE OV2 to 3	Same set of operands as shown for PHASE OV1
ELEMENT: Phase time overcurrent	PHASE TOC1 PKP PHASE TOC1 OP PHASE TOC1 DPO PHASE TOC1 PKP A PHASE TOC1 PKP B PHASE TOC1 PKP C PHASE TOC1 OP A PHASE TOC1 OP B PHASE TOC1 OP C PHASE TOC1 DPO A PHASE TOC1 DPO B PHASE TOC1 DPO C	At least one phase of phase time overcurrent 1 has picked up At least one phase of phase time overcurrent 1 has operated All phases of phase time overcurrent 1 have dropped out Phase A of phase time overcurrent 1 has picked up Phase B of phase time overcurrent 1 has picked up Phase C of phase time overcurrent 1 has picked up Phase A of phase time overcurrent 1 has operated Phase B of phase time overcurrent 1 has operated Phase C of phase time overcurrent 1 has operated Phase A of phase time overcurrent 1 has dropped out Phase B of phase time overcurrent 1 has dropped out Phase C of phase time overcurrent 1 has dropped out
	PHASE TOC2 to 6	Same set of operands as shown for PHASE TOC1
ELEMENT: Phase undervoltage	PHASE UV1 PKP PHASE UV1 OP PHASE UV1 DPO PHASE UV1 PKP A PHASE UV1 PKP B PHASE UV1 PKP C PHASE UV1 OP A PHASE UV1 OP B PHASE UV1 OP C PHASE UV1 DPO A PHASE UV1 DPO B PHASE UV1 DPO C	At least one phase of phase undervoltage 1 has picked up At least one phase of phase undervoltage 1 has operated All phases of phase undervoltage 1 have dropped out Phase A of phase undervoltage 1 has picked up Phase B of phase undervoltage 1 has picked up Phase C of phase undervoltage 1 has picked up Phase A of phase undervoltage 1 has operated Phase B of phase undervoltage 1 has operated Phase C of phase undervoltage 1 has operated Phase A of phase undervoltage 1 has dropped out Phase B of phase undervoltage 1 has dropped out Phase C of phase undervoltage 1 has dropped out
	PHASE UV2 to 3	Same set of operands as shown for PHASE UV1

Operand type	Operand syntax	Operand description
ELEMENT: Selector switch	SELECTOR 1 POS Y	Selector switch 1 is in Position Y (mutually exclusive operands)
	SELECTOR 1 BIT 0	First bit of the 3-bit word encoding position of selector 1
	SELECTOR 1 BIT 1	Second bit of the 3-bit word encoding position of selector 1
	SELECTOR 1 BIT 2	Third bit of the 3-bit word encoding position of selector 1
	SELECTOR 1 STP ALARM	Position of selector 1 has been pre-selected with the stepping up control input but not acknowledged
	SELECTOR 1 BIT ALARM	Position of selector 1 has been pre-selected with the 3-bit control input but not acknowledged
	SELECTOR 1 ALARM	Position of selector 1 has been pre-selected but not acknowledged
	SELECTOR 1 PWR ALARM	Position of selector switch 1 is undetermined or restored from memory when the relay powers up and synchronizes to the three-bit input
	SELECTOR 2	Same set of operands as shown for SELECTOR 1
ELEMENT: Setting group	SETTING GROUP ACT 1	Setting group 1 is active
	SETTING GROUP ACT 2	Setting group 2 is active
	SETTING GROUP ACT 3	Setting group 3 is active
	SETTING GROUP ACT 4	Setting group 4 is active
	SETTING GROUP ACT 5	Setting group 5 is active
	SETTING GROUP ACT 6	Setting group 6 is active
ELEMENT: Disturbance detector	SRC1 50DD OP	Source 1 disturbance detector has operated
	SRC2 50DD OP	Source 2 disturbance detector has operated
	SRC3 50DD OP	Source 3 disturbance detector has operated
	SRC4 50DD OP	Source 4 disturbance detector has operated
	SRC5 50DD OP	Source 5 disturbance detector has operated
	SRC6 50DD OP	Source 6 disturbance detector has operated
ELEMENT: Disconnect switch	SWITCH 1 OFF CMD	Disconnect switch 1 open command initiated
	SWITCH 1 ON CMD	Disconnect switch 1 close command initiated
	SWITCH 1 CLOSED	Disconnect switch 1 is closed
	SWITCH 1 OPEN	Disconnect switch 1 is open
	SWITCH 1 DISCREP	Disconnect switch 1 has discrepancy
	SWITCH 1 TROUBLE	Disconnect switch 1 trouble alarm
	SWITCH 1 ΦA CLSD	Disconnect switch 1 phase A is closed
	SWITCH 1 ΦA OPEN	Disconnect switch 1 phase A is open
	SWITCH 1 ΦA BAD ST	Disconnect switch 1 phase A bad status is detected (discrepancy between the 89/a and 89/b contacts)
	SWITCH 1 ΦA INTERM	Disconnect switch 1 phase A intermediate status is detected (transition from one position to another)
	SWITCH 1 ΦB CLSD	Disconnect switch 1 phase B is closed
	SWITCH 1 ΦB OPEN	Disconnect switch 1 phase B is open
	SWITCH 1 ΦB BAD ST	Disconnect switch 1 phase B bad status is detected (discrepancy between the 89/a and 89/b contacts)
	SWITCH 1 ΦB INTERM	Disconnect switch 1 phase B intermediate status is detected (transition from one position to another)
	SWITCH 1 ΦC CLSD	Disconnect switch 1 phase C is closed
	SWITCH 1 ΦC OPEN	Disconnect switch 1 phase C is open
	SWITCH 1 ΦC BAD ST	Disconnect switch 1 phase C bad status is detected (discrepancy between the 89/a and 89/b contacts)
	SWITCH 1 ΦC INTERM	Disconnect switch 1 phase C intermediate status is detected (transition from one position to another)
	SWITCH 1 BAD STATUS	Disconnect switch 1 bad status is detected on any pole
	SWITCH 2 to 24	Same set of operands as shown for SWITCH 1
ELEMENT: Teleprotection channel tests	TELEPRO CH1 FAIL	Channel 1 failed
	TELEPRO CH2 FAIL	Channel 2 failed
	TELEPRO CH1 ID FAIL	The ID check for a peer relay on channel 1 has failed
	TELEPRO CH2 ID FAIL	The ID check for a peer relay on channel 2 has failed
	TELEPRO CH1 CRC FAIL	CRC detected packet corruption on channel 1
	TELEPRO CH2 CRC FAIL	CRC detected packet corruption on channel 2
	TELEPRO CH1 PKT LOST	CRC detected lost packet on channel 1
	TELEPRO CH2 PKT LOST	CRC detected lost packet on channel 2
ELEMENT: Teleprotection inputs/outputs	TELEPRO INPUT 1-1 On ↓ TELEPRO INPUT 1-16 On	Flag is set, Logic =1 ↓ Flag is set, Logic =1
	TELEPRO INPUT 2-1 On ↓ TELEPRO INPUT 2-16 On	Flag is set, Logic =1 ↓ Flag is set, Logic =1

Operand type	Operand syntax	Operand description
ELEMENT: Thermal overload protection	THERMAL PROT 1 PKP THERMAL PROT 1 OP	Thermal overload protection 1 picked up Thermal overload protection 1 operated
	THERMAL PROT 2	Same set of operands as shown for THERMAL PROT 1
ELEMENT: Trip bus	TRIP BUS 1 PKP TRIP BUS 1 OP	Asserted when the trip bus 1 element picks up Asserted when the trip bus 1 element operates
	TRIP BUS 2 to 6	Same set of operands as shown for TRIP BUS 1
FIXED OPERANDS	Off	Logic = 0. Does nothing and can be used as a delimiter in an equation list; used as 'Disable' by other features.
	On	Logic = 1. Can be used as a test setting.
INPUTS/OUTPUTS: Contact inputs	Cont Ip 1 On Cont Ip 2 On ↓ Cont Ip 1 Off Cont Ip 2 Off ↓ Cont Ip 96 On Cont Ip 96 Off	(does not appear unless ordered) (does not appear unless ordered) ↓ (does not appear unless ordered) (does not appear unless ordered) ↓ (does not appear unless ordered) (does not appear unless ordered)
INPUTS/OUTPUTS: Contact outputs, current (from detector on form-A output only)	Cont Op 1 IOn Cont Op 2 IOn ↓ Cont Op 64 IOn	(does not appear unless ordered) (does not appear unless ordered) ↓ (does not appear unless ordered)
INPUTS/OUTPUTS: Contact outputs, voltage (from detector on form-A output only)	Cont Op 1 VOn Cont Op 2 VOn ↓ Cont Op 64 VOn	(does not appear unless ordered) (does not appear unless ordered) ↓ (does not appear unless ordered)
	Cont Op 1 VOff Cont Op 2 VOff ↓ Cont Op 64 VOff	(does not appear unless ordered) (does not appear unless ordered) ↓ (does not appear unless ordered)
INPUTS/OUTPUTS: Direct inputs	DIRECT INPUT 1 On ↓ DIRECT INPUT 32 On	Flag is set, logic=1 ↓ Flag is set, logic=1
INPUTS/OUTPUTS: RxGOOSE DPS	RxG DPS 1 BAD RxG DPS 1 INTERM RxG DPS 1 OFF RxG DPS 1 ON	Asserted while the RxGOOSE double-point status input is in the bad state Asserted while the RxGOOSE double-point status input is in the intermediate state Asserted while the RxGOOSE double-point status input is off Asserted while the RxGOOSE double-point status input is on
	RxG DPS 2 to 5	Same set of operands as per RxG DPS 1
INPUTS/OUTPUTS: RxGOOSE Booleans	RxG Bool 1 On RxG Bool 2 On RxG Bool 3 On ↓ RxG Bool 256 On	Flag is set, logic=1 Flag is set, logic=1 Flag is set, logic=1 ↓ Flag is set, logic=1
INPUTS/OUTPUTS: Virtual inputs	Virt Ip 1 On Virt Ip 2 On Virt Ip 3 On ↓ Virt Ip 64 On	Flag is set, logic=1 Flag is set, logic=1 Flag is set, logic=1 ↓ Flag is set, logic=1
INPUTS/OUTPUTS: Virtual outputs	Virt Op 1 On Virt Op 2 On Virt Op 3 On ↓ Virt Op 96 On	Flag is set, logic=1 Flag is set, logic=1 Flag is set, logic=1 ↓ Flag is set, logic=1

Operand type	Operand syntax	Operand description
LED INDICATORS: Fixed front panel LEDs	LED IN SERVICE LED TROUBLE LED TEST MODE LED TRIP LED ALARM LED PICKUP LED VOLTAGE LED CURRENT LED FREQUENCY LED OTHER LED PHASE A LED PHASE B LED PHASE C LED NEUTRAL/GROUND	Asserted when the front panel IN SERVICE LED is on Asserted when the front panel TROUBLE LED is on Asserted when the front panel TEST MODE LED is on Asserted when the front panel TRIP LED is on Asserted when the front panel ALARM LED is on Asserted when the front panel PICKUP LED is on Asserted when the front panel VOLTAGE LED is on Asserted when the front panel CURRENT LED is on Asserted when the front panel FREQUENCY LED is on Asserted when the front panel OTHER LED is on Asserted when the front panel PHASE A LED is on Asserted when the front panel PHASE B LED is on Asserted when the front panel PHASE C LED is on Asserted when the front panel NEUTRAL/GROUND LED is on
LED INDICATORS: LED test	LED TEST IN PROGRESS	An LED test has been initiated and has not finished
LED INDICATORS: User-programmable LEDs	LED USER 1	Asserted when user-programmable LED 1 is on
	LED USER 2 to 48	The operand above is available for user-programmable LEDs 2 through 48
PASSWORD SECURITY	ACCESS LOC SETG OFF ACCESS LOC SETG ON ACCESS LOC CMND OFF ACCESS LOC CMND ON ACCESS REM SETG OFF ACCESS REM SETG ON ACCESS REM CMND OFF ACCESS REM CMND ON UNAUTHORIZED ACCESS	Asserted when local setting access is disabled Asserted when local setting access is enabled Asserted when local command access is disabled Asserted when local command access is enabled Asserted when remote setting access is disabled Asserted when remote setting access is enabled Asserted when remote command access is disabled Asserted when remote command access is enabled Asserted when a password entry fails while accessing a password protected level of the B30
RxGOOSE	RxGOOSE 1 On ↓ RxGOOSE 64 On	Flag is set, logic=1 ↓ Flag is set, logic=1
	RxGOOSE 1 Off ↓ RxGOOSE 64 Off	Flag is set, logic=1 ↓ Flag is set, logic=1
	R-RxGOOSE1 IGMP On R-TxGOOSE1 ARP On <RxGOOSE Boolean1 ID> On <RxGOOSE DPS1 ID> Bad <RxGOOSE DPS1 ID> Interm <RxGOOSE DPS1 ID> Off <RxGOOSE DPS1 ID> On	Indicates status of IGMP connection for R-GOOSE multicast reception Indicates status of ARP connection for R GOOSE unicast transmission Replace bracketed text with RxGOOSE Boolean1 status of "true" Replace bracketed text with RxGOOSE DPS1 status of "bad-state" Replace bracketed text with RxGOOSE DPS1 status is "intermediate-state" Replace bracketed text with RxGOOSE DPS1 status is "off" Replace bracketed text with RxGOOSE DPS1 status is "on"
RESETTING	RESET OP RESET OP (COMMS) RESET OP (OPERAND) RESET OP (PUSHBUTTON)	Reset command is operated (set by all three operands below) Communications source of the reset command Operand (assigned in the **INPUTS/OUTPUTS ⇨⇩ RESETTING** menu) source of the reset command Reset key (pushbutton) source of the reset command

Operand type	Operand syntax	Operand description
SELF-DIAGNOSTICS (See Relay Self-tests descriptions in Chapter 7: Commands and Targets)	ANY MAJOR ERROR	Any of the major self-test errors generated (major error)
	ANY MINOR ERROR	Any of the minor self-test errors generated (minor error)
	ANY SELF-TESTS	Any self-test errors generated (generic, any error)
	BATTERY FAIL	The battery is weak or not functioning. Replace as outlined in the Maintenance chapter.
	CLOCK UNSYNCHRONIZED	Relay is not synchronized to the international time standard
	DIRECT DEVICE OFF	A direct device is configured but not connected
	DIRECT RING BREAK	The Direct I/O settings is for a connection that is not in a ring
	EQUIPMENT MISMATCH	The configuration of modules does not match the stored order code
	FLEXLOGIC ERR TOKEN	A FlexLogic equation is incorrect
	IRIG-B FAILURE	"Bad IRIG-B Signal" self-test. See Chapter 7: Commands and Targets.
	LATCHING OUT ERROR	A difference is detected between the desired and actual latch contact state
	MAINTENANCE ALERT	A subset of the minor self-test errors generated, see Chapter 7
	FIRST ETHERNET FAIL	Link failure detected. See description in Chapter 7: Commands and Targets.
	PROCESS BUS FAILURE	See description in Chapter 7: Commands and Targets
	PTP FAILURE	"Bad PTP Signal" self-test as described in Chapter 7
	RxGOOSE OFF	One or more GOOSE messages are not being received
	RRTD COMM FAIL	See description in Chapter 7: Commands and Targets
	SECOND ETHERNET FAIL	See description in Chapter 7: Commands and Targets
	THIRD ETHERNET FAIL	See description in Chapter 7: Commands and Targets
	SNTP FAILURE	SNTP server is not responding
	SYSTEM EXCEPTION	See description in Chapter 7: Commands and Targets
	TEMP MONITOR	Monitors ambient temperature and maximum operating temperature
	UNIT NOT PROGRAMMED	The product **SETUP > INSTALLATION > RELAYS SETTINGS** setting is not programmed
	SETTING CHANGED	Any device settings changed over any available interface; operand is asserted for at least one second and then self-reset
TEMPERATURE MONITOR	TEMP MONITOR	Asserted while the ambient temperature is greater than the maximum operating temperature (80°C)
USER-PROGRAMMABLE PUSHBUTTONS	PUSHBUTTON 1 ON	Pushbutton number 1 is in the "On" position
	PUSHBUTTON 1 OFF	Pushbutton number 1 is in the "Off" position
	ANY PB ON	Any of 12 pushbuttons is in the "On" position
	PUSHBUTTON 2 to 6, 12, or 16 depending on front panel	Same set of operands as PUSHBUTTON 1

Some operands can be re-named. These are the names of the breakers in the breaker control feature, the ID (identification) of contact inputs and outputs, the ID of virtual inputs, and the ID of virtual outputs. If the user changes the default name or ID of any of these operands, the assigned name appears in the relay list of operands. The default names are shown in the FlexLogic operands table.

The characteristics of the logic gates are tabulated in the following table, and the operators available in FlexLogic are listed in the FlexLogic operators table.

Table 5-20: FlexLogic gate characteristics

Gates	Number of inputs	Output is '1' (= ON) if...
NOT	1	input is '0'
OR	2 to 16	any input is '1'
AND	2 to 16	all inputs are '1'
NOR	2 to 16	all inputs are '0'
NAND	2 to 16	any input is '0'
XOR	2	only one input is '1'

Table 5-21: FlexLogic operators

Type	Syntax	Description	Notes
Editor	INSERT	Insert a parameter in an equation list	
	DELETE	Delete a parameter from an equation list	
End	END	The first END encountered signifies the last entry in the list of processed FlexLogic parameters	
One-shot	POSITIVE ONE SHOT	One shot that responds to a positive going edge	A 'one shot' refers to a single input gate that generates a pulse in response to an edge on the input. The output from a 'one shot' is True (positive) for only one pass through the FlexLogic equation. There is a maximum of 64 'one shots.'
	NEGATIVE ONE SHOT	One shot that responds to a negative going edge	
	DUAL ONE SHOT	One shot that responds to both the positive and negative going edges	
Logic gate	NOT	Logical NOT	Operates on the previous parameter
	OR(2) ↓ OR(16)	2 input OR gate ↓ 16 input OR gate	Operates on the 2 previous parameters ↓ Operates on the 16 previous parameters
	AND(2) ↓ AND(16)	2 input AND gate ↓ 16 input AND gate	Operates on the 2 previous parameters ↓ Operates on the 16 previous parameters
	NOR(2) ↓ NOR(16)	2 input NOR gate ↓ 16 input NOR gate	Operates on the 2 previous parameters ↓ Operates on the 16 previous parameters
	NAND(2) ↓ NAND(16)	2 input NAND gate ↓ 16 input NAND gate	Operates on the 2 previous parameters ↓ Operates on the 16 previous parameters
	XOR(2)	2 input Exclusive OR gate	Operates on the 2 previous parameters
	LATCH (S,R)	Latch (set, reset): reset-dominant	The parameter preceding LATCH(S,R) is the reset input. The parameter preceding the reset input is the set input.
Timer	TIMER 1 ↓ TIMER 32	Timer set with FlexLogic timer 1 settings ↓ Timer set with FlexLogic timer 32 settings	The timer is started by the preceding parameter. The output of the timer is TIMER #.
Assign virtual output	= Virt Op 1 ↓ = Virt Op 96	Assigns previous FlexLogic operand to virtual output 1 ↓ Assigns previous FlexLogic operand to virtual output 96	The virtual output is set by the preceding parameter

5.6.2 FlexLogic rules

When forming a FlexLogic equation, the sequence in the linear array of parameters must follow these general rules:

1. Operands must precede the operator that uses the operands as inputs.
2. Operators have only one output. The output of an operator must be used to create a virtual output if it is to be used as an input to two or more operators.
3. Assigning the output of an operator to a virtual output terminates the equation.
4. A timer operator (for example, "TIMER 1") or virtual output assignment (for example, " = Virt Op 1") can be used once only. If this rule is broken, a syntax error is declared.

5.6.3 FlexLogic evaluation

Each equation is evaluated in the ascending order in which the parameters have been entered.

NOTE

FlexLogic provides built-in latches that by definition have a memory action, remaining in the set state after the set input has been asserted. These built-in latches are reset dominant, meaning that if logical "1" is applied to both set and reset entries simultaneously, then the output of the latch is logical "0." However, they are volatile, meaning that they reset upon removal of control power.

When making changes to FlexLogic entries in the settings, all FlexLogic equations are re-compiled whenever any new FlexLogic entry value is entered, and as a result of the re-compile all latches are reset automatically.

To implement FlexLogic using a graphical user interface, see the FlexLogic Design and Monitoring using Engineer section in the previous chapter.

5.6.4 FlexLogic example

This section provides an example of logic implementation for a typical application. The sequence of steps is important to minimize the work to develop the relay settings. Note that the example in the following figure demonstrates the procedure, not to solve a specific application situation.

Note that there is also a graphical interface with which to draw logic and populate FlexLogic equation entries. See the Engineer content at the end of the previous chapter.

In the example, it is assumed that logic has already been programmed to produce virtual outputs 1 and 2, and is only a part of the full set of equations used. When using FlexLogic, it is important to make a note of each virtual output used; a virtual output designation (1 to 96) can be assigned only once.

Figure 5-75: Logic example

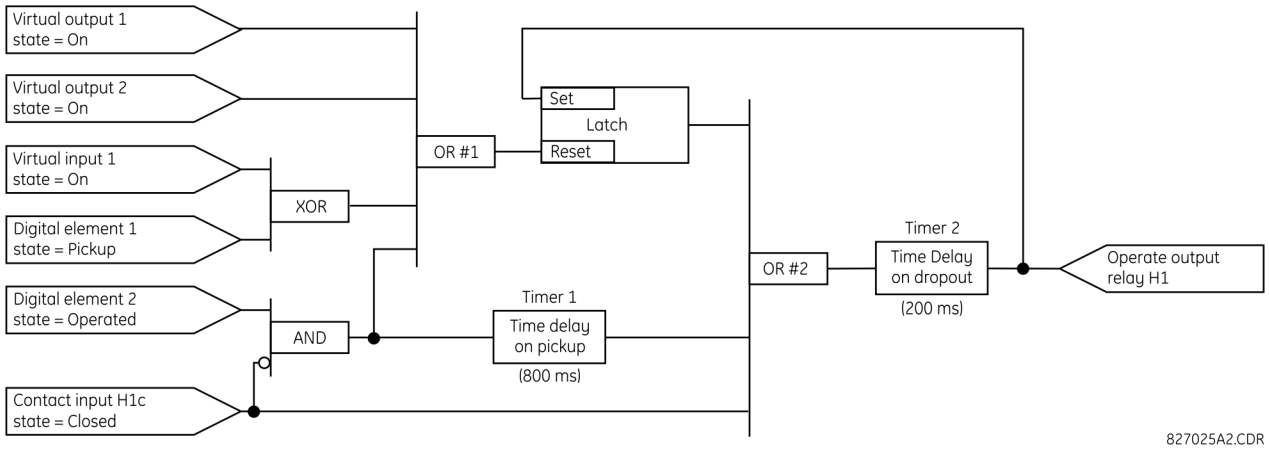

1. Inspect the example logic diagram to determine if the required logic can be implemented with the FlexLogic operators. If this is not possible, the logic must be altered until this condition is satisfied. Once done, count the inputs to each gate to verify that the number of inputs does not exceed the FlexLogic limits, which is unlikely but possible. If the number of inputs is too high, subdivide the inputs into multiple gates to produce an equivalent. For example, if 25 inputs to an AND gate are required, connect Inputs 1 through 16 to AND(16), 17 through 25 to AND(9), and the outputs from these two gates to AND(2).

   Inspect each operator between the initial operands and final virtual outputs to determine if the output from the operator is used as an input to more than one following operator. If so, the operator output must be assigned as a virtual output.

   For the example shown, the output of the AND gate is used as an input to both OR#1 and Timer 1, and must therefore be made a virtual output and assigned the next available number (that is, Virtual Output 3). The final output must also be assigned to a virtual output as virtual output 4, which is programmed in the contact output section to operate relay H1 (that is, contact output H1).

   Therefore, the required logic can be implemented with two FlexLogic equations with outputs of virtual output 3 and virtual output 4, shown as follows.

Figure 5-76: Logic example with virtual outputs

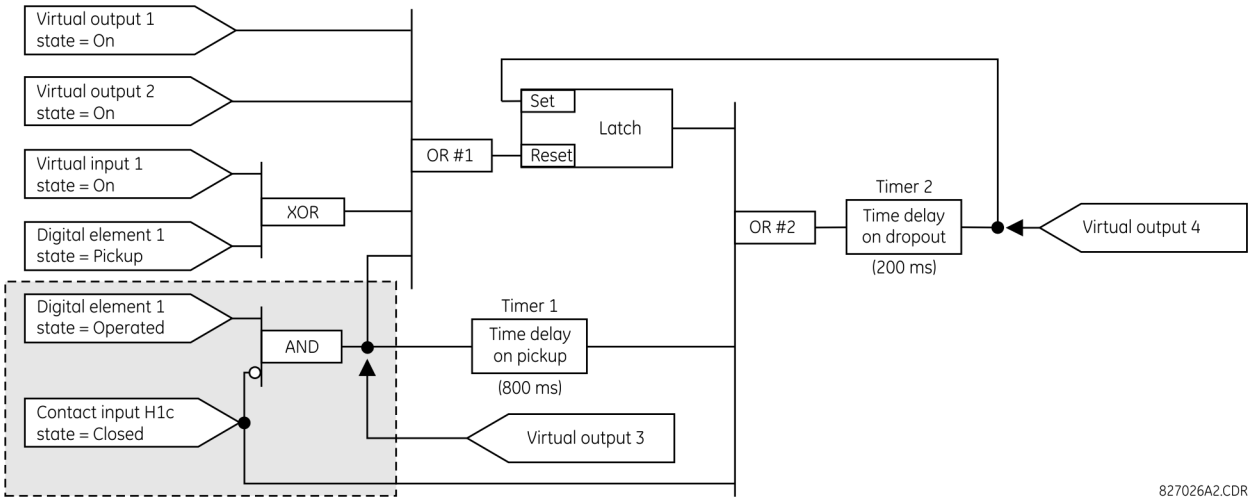

2. Prepare a logic diagram for the equation to produce virtual output 3, as this output is used as an operand in the virtual output 4 equation (create the equation for every output that is used as an operand first, so that when these operands are required they already have been evaluated and assigned to a specific virtual output). The logic for virtual output 3 is shown as follows with the final output assigned.

Figure 5-77: Logic for virtual output 3

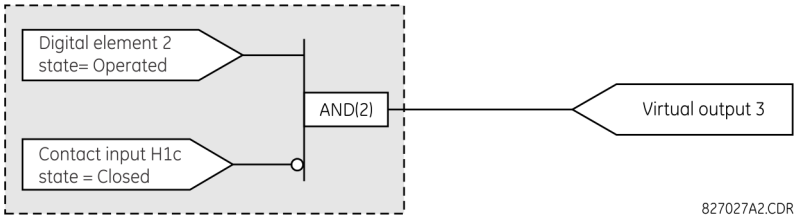

3. Prepare a logic diagram for virtual output 4, replacing the logic ahead of virtual output 3 with a symbol identified as virtual output 3, shown as follows.

Figure 5-78: Logic for virtual output 4

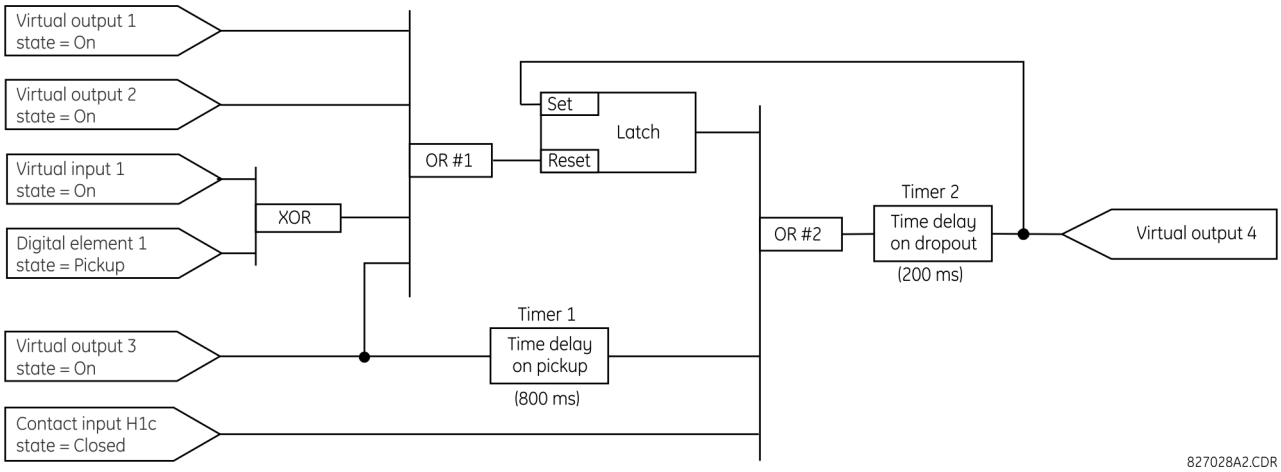

4. Program the FlexLogic equation for virtual output 3 by translating the logic into available FlexLogic parameters. The equation is formed one parameter at a time until the required logic is complete. It is generally easier to start at the output end of the equation and work back towards the input, as shown in the following steps. It is also recommended

to list operator inputs from bottom to top. For demonstration, the final outputs are arbitrarily identified as parameter 99, and each preceding parameter decremented by one in turn. Until accustomed to using FlexLogic, it is suggested that a worksheet with a series of cells marked with the arbitrary parameter numbers be prepared shown as follows.

Figure 5-79: FlexLogic worksheet

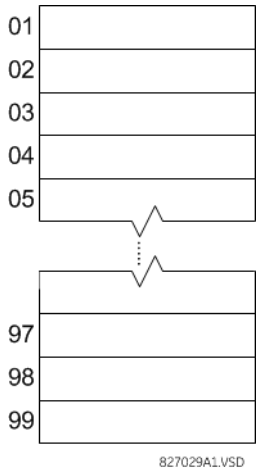

5. Following the procedure outlined, start with parameter 99, as follows:
   - 99: The final output of the equation is virtual output 3, which is created by the operator "= Virt Op n". This parameter is therefore "= Virt Op 3".
   - 98: The gate preceding the output is an AND, which in this case requires two inputs. The operator for this gate is a 2-input AND so the parameter is “AND(2)”. Note that FlexLogic rules require that the number of inputs to most types of operators must be specified to identify the operands for the gate. As the 2-input AND operates on the two operands preceding it, these inputs must be specified, starting with the lower.
   - 97: This lower input to the AND gate must be passed through an inverter (the NOT operator) so the next parameter is “NOT”. The NOT operator acts upon the operand immediately preceding it, so specify the inverter input next.
   - 96: The input to the NOT gate is to be contact input H1c. The ON state of a contact input can be programmed to be set when the contact is either open or closed. Assume for this example that the state is to be ON for a closed contact. The operand is therefore “Cont Ip H1c On”.
   - 95: The last step in the procedure is to specify the upper input to the AND gate, the operated state of digital element 2. This operand is "DIG ELEM 2 OP".

   Writing the parameters in numerical order forms the equation for virtual output 3:

```
[95] DIG ELEM 2 OP
[96] Cont Ip H1c On
[97] NOT
[98] AND(2)
[99] = Virt Op 3
```

   It is now possible to check that this selection of parameters produces the required logic by converting the set of parameters into a logic diagram. The result of this process is shown in the figure, which is compared to the logic for virtual output 3 diagram as a check.

Figure 5-80: FlexLogic equation for virtual output 3

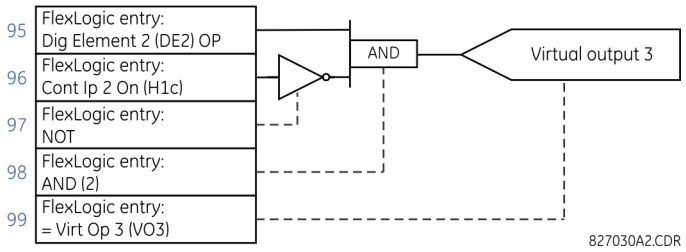

6. Repeating the process described for virtual output 3, select the FlexLogic parameters for Virtual Output 4.
   - 99: The final output of the equation is virtual output 4, which is parameter "= Virt Op 4".
   - 98: The operator preceding the output is timer 2, which is operand "TIMER 2". Note that the settings required for the timer are established in the timer programming section.
   - 97: The operator preceding timer 2 is OR #2, a 3-input OR, which is parameter "OR(3)".
   - 96: The lowest input to OR #2 is operand "Cont Ip H1c On".
   - 95: The center input to OR #2 is operand "TIMER 1".
   - 94: The input to timer 1 is operand "Virt Op 3 On".
   - 93: The upper input to OR #2 is operand "LATCH (S,R)".
   - 92: There are two inputs to a latch, and the input immediately preceding the latch reset is OR #1, a 4-input OR, which is parameter "OR(4)".
   - 91: The lowest input to OR #1 is operand "Virt Op 3 On".
   - 90: The input just above the lowest input to OR #1 is operand "XOR(2)".
   - 89: The lower input to the XOR is operand "DIG ELEM 1 PKP".
   - 88: The upper input to the XOR is operand "Virt Ip 1 On".
   - 87: The input just below the upper input to OR #1 is operand "Virt Op 2 On".
   - 86: The upper input to OR #1 is operand "Virt Op 1 On".
   - 85: The last parameter is used to set the latch, and is operand "Virt Op 4 On".

   The equation for virtual output 4 is:

```
[85] Virt Op 4 On
[86] Virt Op 1 On
[87] Virt Op 2 On
[88] Virt Ip 1 On
[89] DIG ELEM 1 PKP
[90] XOR(2)
[91] Virt Op 3 On
[92] OR(4)
[93] LATCH (S,R)
[94] Virt Op 3 On
[95] TIMER 1
[96] Cont Ip H1c On
[97] OR(3)
[98] TIMER 2
[99] = Virt Op 4
```

   Now check that the selection of parameters produce the required logic by converting the set of parameters into a logic diagram. The result is shown in the figure, which is compared to the logic for virtual output 4 diagram as a check.

Figure 5-81: FlexLogic equation for virtual output 4

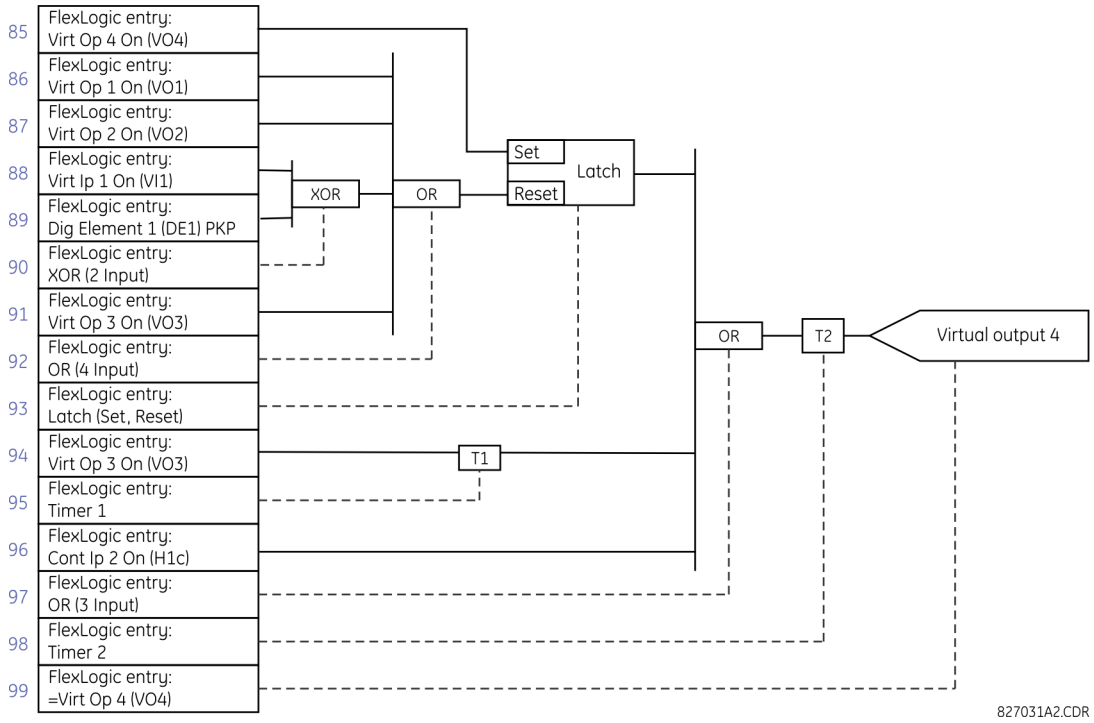

7. Now write the complete FlexLogic expression required to implement the logic, making an effort to assemble the equation in an order where Virtual Outputs that are used as inputs to operators are created before needed. In cases where a lot of processing is required to perform logic, this can be difficult to achieve, but in most cases does not cause problems as all logic is calculated at least four times per power frequency cycle. The possibility of a problem caused by sequential processing emphasizes the necessity to test the performance of FlexLogic before it is placed in service.

   In the following equation, virtual output 3 is used as an input to both latch 1 and timer 1 as arranged in the following order:

```
DIG ELEM 2 OP
Cont Ip H1c On
NOT
AND(2)
= Virt Op 3
Virt Op 4 On
Virt Op 1 On
Virt Op 2 On
Virt Ip 1 On
DIG ELEM 1 PKP
XOR(2)
Virt Op 3 On
OR(4)
LATCH (S,R)
Virt Op 3 On
TIMER 1
Cont Ip H1c On
OR(3)
TIMER 2
= Virt Op 4
END
```

   In this expression, the virtual output 4 input to the four-input OR is listed before it is created. This is typical of a form of feedback, in this case, used to create a seal-in effect with the latch, and is correct.

8. Always test the logic after it is loaded into the relay, in the same way as has been used in the past. Testing can be simplified by placing an "END" operator within the overall set of FlexLogic equations. The equations are evaluated up

to the first "END" operator.

The "On" and "Off" operands can be placed in an equation to establish a known set of conditions for test purposes, and the "INSERT" and "DELETE" commands can be used to modify equations.

5.6.5 FlexLogic equation editor

SETTINGS ⇨⇩ FLEXLOGIC ⇨ FLEXLOGIC EQUATION EDITOR

■ FLEXLOGIC ■ EQUATION EDITOR	⇔	FLEXLOGIC ENTRY 1: END	Range: FlexLogic operands
		⇩	
	⇧	FLEXLOGIC ENTRY 1024: END	Range: FlexLogic operands

There are 1,024 FlexLogic entries available, numbered from 1 to 1024, with default END entry settings. If a "Disabled" element is selected as a FlexLogic entry, the associated state flag is never set to '1'. Press the **+/–** key when editing FlexLogic equations to quickly scan through the major parameter types.

5.6.6 FlexLogic timers

SETTINGS ⇨⇩ FLEXLOGIC ⇨⇩ FLEXLOGIC TIMERS ⇨ FLEXLOGIC TIMER 1(32)

■ FLEXLOGIC ■ TIMER 1	⇔	TIMER 1 TYPE: millisecond	Range: millisecond, second, minute
	⇩	TIMER 1 PICKUP DELAY: 0	Range: 0 to 60000 in steps of 1
	⇧	TIMER 1 DROPOUT DELAY: 0	Range: 0 to 60000 in steps of 1

There are 32 identical FlexLogic timers available. These timers are used as operators for FlexLogic equations.

TIMER 1 TYPE — Selects the time measurement unit.

TIMER 1 PICKUP DELAY — Sets the time delay to pickup. If a pickup delay is not required, set this function to "0."

TIMER 1 DROPOUT DELAY — Sets the time delay to dropout. If a dropout delay is not required, set this function to "0."

5.6.7 FlexElements

SETTINGS ⇨⇩ FLEXLOGIC ⇨⇩ FLEXELEMENTS ⇨ FLEXELEMENT 1(8)

■ FLEXELEMENT 1 ■	⇔	FLEXELEMENT 1 FUNCTION: Disabled	Range: Disabled, Enabled
	⇩	FLEXELEMENT 1 NAME: FxE 1	Range: up to six alphanumeric characters
	⇩	FLEXELEMENT 1 +IN: Off	Range: Off, any analog actual value parameter
	⇩	FLEXELEMENT 1 -IN: Off	Range: Off, any analog actual value parameter
	⇩	FLEXELEMENT 1 INPUT MODE: SIGNED	Range: SIGNED, ABSOLUTE
	⇩	FLEXELEMENT 1 COMP MODE: LEVEL	Range: LEVEL, DELTA
	⇩	FLEXELEMENT 1 DIRECTION: OVER	Range: OVER, UNDER

⇕	**FLEXELEMENT 1 PICKUP: 1.000 pu**	Range: –90.000 to 90.000 pu in steps of 0.001
⇕	**FLEXELEMENT 1 HYSTERESIS: 3.0%**	Range: 0.1 to 50.0% in steps of 0.1
⇕	**FLEXELEMENT 1 dt UNIT: Milliseconds**	Range: Milliseconds, Seconds, Minutes
⇕	**FLEXELEMENT 1 dt: 20**	Range: 20 to 86400 in steps of 1
⇕	**FLEXELEMENT 1 PKP DELAY: 0.000 s**	Range: 0.000 to 65.535 s in steps of 0.001
⇕	**FLEXELEMENT 1 RST DELAY: 0.000 s**	Range: 0.000 to 65.535 s in steps of 0.001
⇕	**FLEXELEMENT 1 BLK: Off**	Range: FlexLogic operand
⇕	**FLEXELEMENT 1 TARGET: Self-reset**	Range: Self-reset, Disabled, Latched
⇧	**FLEXELEMENT 1 EVENTS: Disabled**	Range: Disabled, Enabled

A FlexElement is a universal comparator used to monitor any analog actual value calculated by the relay or a net difference of any two analog actual values of the same type. The effective operating signal can be treated as a signed number or its absolute value can be used.

FlexElements run every half power cycle (every four protection passes).

The element can be programmed to respond either to a signal level or to a rate-of-change (delta) over a pre-defined period of time. The output operand is asserted when the operating signal is higher than a threshold or lower than a threshold, as per your choice.

Figure 5-82: FlexElement logic

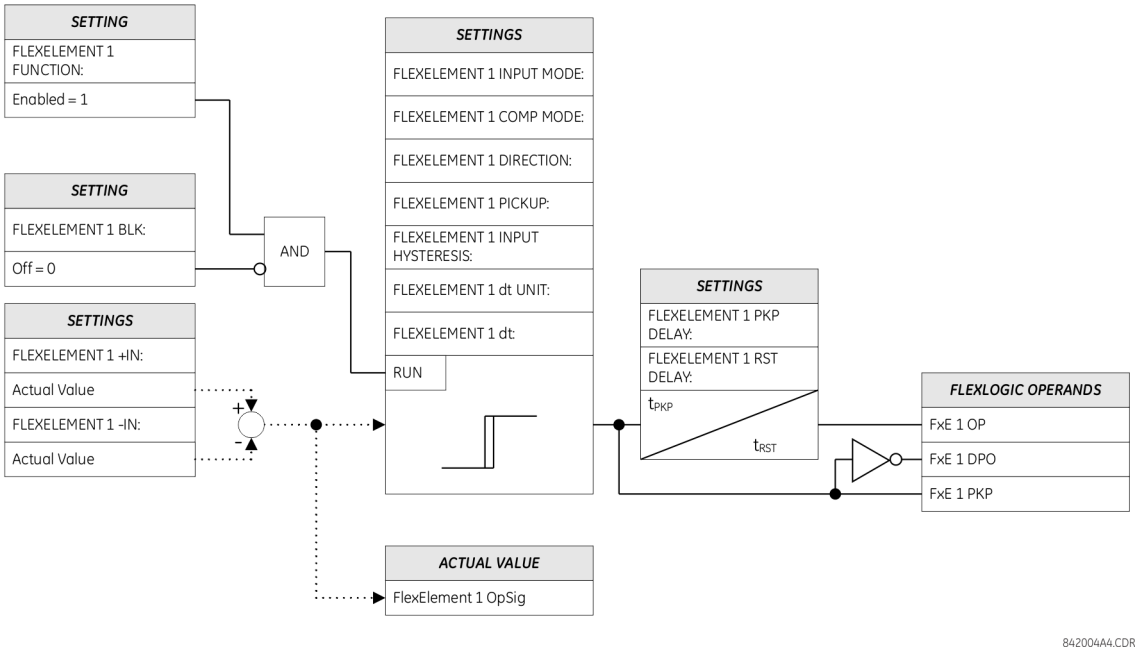

FLEXELEMENT 1 +IN — This setting specifies the first (non-inverted) input to the FlexElement. Zero is assumed as the input if this setting is set to "Off." For proper operation of the element, at least one input must be selected. Otherwise, the element does not assert its output operands.

FLEXELEMENT 1 –IN — Specifies the second (inverted) input to the FlexElement. Zero is assumed as the input if this setting is set to "Off." For proper operation of the element, at least one input must be selected. Otherwise, the element does not assert its output operands. This input is used to invert the signal if needed for convenience, or to make the element respond to a differential signal, such as for a top-bottom oil temperature differential alarm. The element does not operate if the two input signals are of different types, for example if one tries to use active power and phase angle to build the effective operating signal.

The element responds directly to the differential signal if the **FLEXELEMENT 1 INPUT MODE** setting is set to "Signed" The element responds to the absolute value of the differential signal if this setting is set to "Absolute." Sample applications for the "Absolute" setting include monitoring the angular difference between two phasors with a symmetrical limit angle in both directions, monitoring power regardless of its direction, or monitoring a trend.

The element responds directly to its operating signal—as defined by the **FLEXELEMENT 1 +IN**, **FLEXELEMENT 1 –IN** and **FLEXELEMENT 1 INPUT MODE** settings—if the **FLEXELEMENT 1 COMP MODE** setting is set to "Level." The element responds to the rate of change of its operating signal if the **FLEXELEMENT 1 COMP MODE** setting is set to "Delta." In this case, the **FLEXELEMENT 1 dt UNIT** and **FLEXELEMENT 1 dt** settings specify how the rate of change is derived.

FLEXELEMENT 1 DIRECTION — Enables the relay to respond to either high or low values of the operating signal. The following figure explains the application of the **FLEXELEMENT 1 DIRECTION**, **FLEXELEMENT 1 PICKUP**, and **FLEXELEMENT 1 HYSTERESIS** settings.

Figure 5-83: FlexElement direction, pickup, and hysteresis

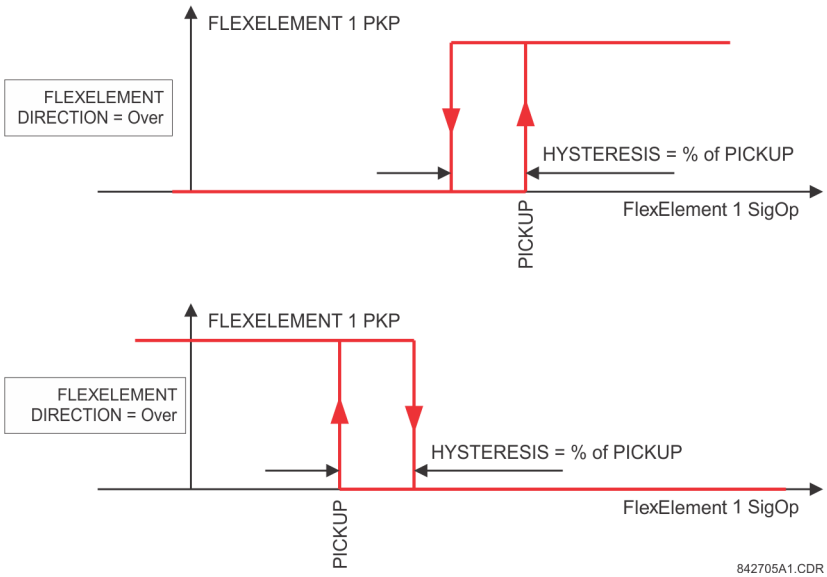

In conjunction with the **FLEXELEMENT 1 INPUT MODE** setting, the element can be programmed to provide two extra characteristics, as shown in the following figure.

Figure 5-84: FlexElement input mode setting

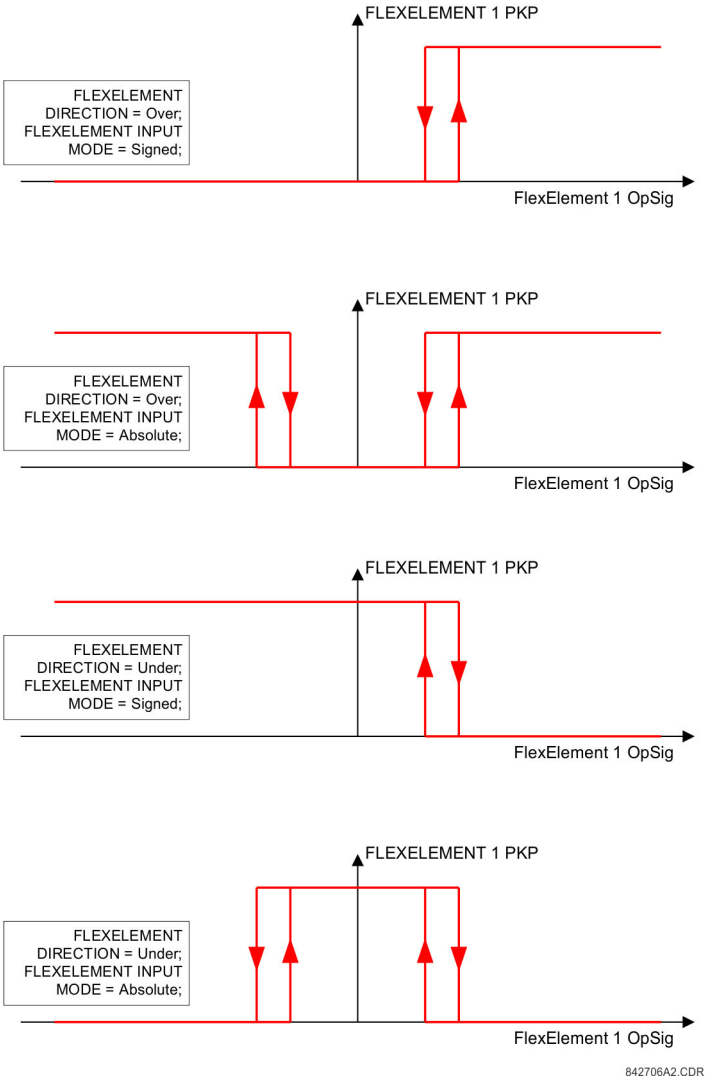

FLEXELEMENT 1 PICKUP — This setting specifies the operating threshold for the effective operating signal of the element. If set to "Over," the element picks up when the operating signal exceeds the **FLEXELEMENT 1 PICKUP** value. If set to "Under," the element picks up when the operating signal falls below the **FLEXELEMENT 1 PICKUP** value.

When using FlexElements for Voltage Elements, 1 pu is always equal to phase to ground voltage nominal secondary voltage, even if you select a phase to phase voltage as an operating quantity.

FLEXELEMENT 1 HYSTERESIS — This setting controls the element dropout. Notice that both the operating signal and the pickup threshold can be negative, facilitating applications such as reverse power alarm protection. The FlexElement can be programmed to work with all analog actual values measured by the relay. The **FLEXELEMENT 1 PICKUP** setting is entered in per-unit values using the following definitions of the base units.

Table 5-22: FlexElement base units

Unit	Description
BREAKER ACC ARCING AMPS (Brk X Acc Arc Amp A, B, and C)	BASE = 2000 $kA^2 \times$ cycle
BREAKER ARCING AMPS (Brk X Arc Amp A, B, and C)	BASE = 1 $kA^2 \times$ cycle

Unit	Description
BUS DIFFERENTIAL RESTRAINING CURRENT (Bus Diff Mag)	I_{BASE} = maximum primary RMS value of the +IN and –IN inputs (CT primary for source currents, and bus reference primary current for bus differential currents)
BUS DIFFERENTIAL RESTRAINING CURRENT (Bus Rest Mag)	I_{BASE} = maximum primary RMS value of the +IN and – IN inputs (CT primary for source currents, and bus reference primary current for bus differential currents)
DCmA	BASE = maximum value of the **DCMA INPUT MAX** setting for the two transducers configured under the +IN and –IN inputs
DELTA TIME	BASE = 1 µs
FREQUENCY	f_{BASE} = 1 Hz
PHASE ANGLE	φ_{BASE} = 360 degrees (see the UR angle referencing convention)
POWER FACTOR	PF_{BASE} = 1.00
RTDs	BASE = 100°C
SOURCE CURRENT	I_{BASE} = maximum nominal primary RMS value of the +IN and –IN inputs
SOURCE ENERGY (Positive and Negative Watthours, Positive and Negative Varhours)	E_{BASE} = 10000 MWh or MVAh, respectively
SOURCE POWER	P_{BASE} = maximum value of $V_{BASE} \times I_{BASE}$ for the +IN and –IN inputs
SOURCE VOLTAGE	V_{BASE} = maximum nominal primary RMS value of the +IN and –IN inputs

FLEXELEMENT 1 HYSTERESIS — This setting defines the pickup–dropout relation of the element by specifying the width of the hysteresis loop as a percentage of the pickup value as shown in the FlexElement Direction, Pickup, and Hysteresis diagram.

FLEXELEMENT 1 dt UNIT — Specifies the time unit for the setting **FLEXELEMENT 1 dt**. This setting is applicable only if **FLEXELEMENT 1 COMP MODE** is set to "Delta."

FLEXELEMENT 1 dt — Specifies duration of the time interval for the rate of change mode of operation. This setting is applicable only if **FLEXELEMENT 1 COMP MODE** is set to "Delta."

FLEXELEMENT 1 PKP DELAY — Specifies the pickup delay of the element.

FLEXELEMENT 1 RST DELAY — Specifies the reset delay of the element.

5.6.8 Non-volatile latches

SETTINGS ⇨⇩ FLEXLOGIC ⇨⇩ NON-VOLATILE LATCHES ⇨ LATCH 1(16)

■ **LATCH 1** ■	⇔	**LATCH 1 FUNCTION: Disabled**	Range: Disabled, Enabled
	⇩	**LATCH 1 ID: NV Latch 1**	Range: up to 20 alphanumeric characters
	⇩	**LATCH 1 TYPE: Reset Dominant**	Range: Reset Dominant, Set Dominant
	⇩	**LATCH 1 SET: Off**	Range: FlexLogic operand
	⇩	**LATCH 1 RESET: Off**	Range: FlexLogic operand
	⇩	**LATCH 1 TARGET: Self-reset**	Range: Self-reset, Latched, Disabled
	⇧	**LATCH 1 EVENTS: Disabled**	Range: Disabled, Enabled

The non-volatile latches provide a permanent logical flag that is stored safely and do not reset upon restart after the relay is powered down. Typical applications include sustaining operator commands or permanently blocking relay functions, such as Autorecloser, until a deliberate interface action resets the latch.

LATCH 1 TYPE — This setting characterizes Latch 1 to be Set- or Reset-dominant.

LATCH 1 SET — If asserted, the specified FlexLogic operands 'sets' Latch 1.

LATCH 1 RESET — If asserted, the specified FlexLogic operand 'resets' Latch 1.

Figure 5-85: Non-volatile latch operation table (N = 1 to 16) and logic

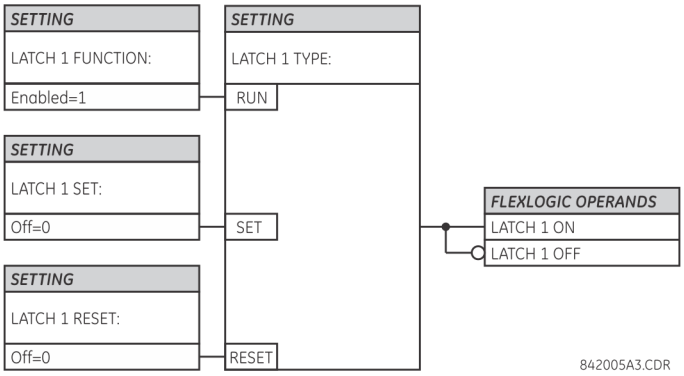

Latch n type	Latch n set	Latch n reset	Latch n on	Latch n off
Reset Dominant	ON	OFF	ON	OFF
	OFF	OFF	Previous State	Previous State
	ON	ON	OFF	ON
	OFF	ON	OFF	ON
Set Dominant	ON	OFF	ON	OFF
	ON	ON	ON	OFF
	OFF	OFF	Previous State	Previous State
	OFF	ON	OFF	ON

5.7 Grouped elements

5.7.1 Overview

Each protection element can be assigned up to six sets of settings with designations 1 to 6. The performance of these elements is defined by the active setting group at a given time. Multiple setting groups allow the user to conveniently change protection settings for different operating situations (for example, altered power system configuration or season of the year). The active setting group can be preset or selected in the **SETTING GROUPS** menu (see the Control Elements section later in this chapter). See also the Introduction to Elements section at the beginning of this chapter.

5.7.2 Setting group 1

SETTINGS ⇨⇩ GROUPED ELEMENTS ⇨ SETTING GROUP 1(6)

■ **SETTING GROUP 1** ■	⇔	■ **BUS DIFFERENTIAL** ■	See below
	⇩	■ **PHASE CURRENT** ■	See page 5-174

⇕	■ NEUTRAL CURRENT ■	See page 5-186
⇕	■ GROUND CURRENT ■	See page 5-189
⇕	■ BREAKER FAILURE ■	See page 5-192
⇧	■ VOLTAGE ELEMENTS ■	See page 5-201

Each of the six setting group menus is identical. Setting group 1 (the default active group) is active automatically when no other group is active.

If the device incorrectly switches to group 1 after power cycling, upgrade the firmware to version 7.31 or later to correct this issue.

5.7.3 Bus differential

SETTINGS ⇨⇩ GROUPED ELEMENTS ⇨⇩ SETTING GROUP 1(6) ⇨ BUS DIFFERENTIAL ⇨ BUS ZONE 1(2) DIFFERENTIAL

■ BUS ZONE 1 ■ DIFFERENTIAL	⇔	BUS ZONE 1 DIF FUNCTION: Disabled	Range: Disabled, Enabled
	⇕	BUS ZONE 1 DIF PICKUP: 0.100 pu	Range: 0.050 to 6.000 pu in steps of 0.001
	⇕	BUS ZONE 1 DIF LOW SLOPE: 25%	Range: 15 to 100% in steps of 1
	⇕	BUS ZONE 1 DIF LOW BPNT: 2.00 pu	Range: 1.00 to 30.00 pu in steps of 0.01
	⇕	BUS ZONE 1 DIF HIGH SLOPE: 60%	Range: 50 to 100% in steps of 1
	⇕	BUS ZONE 1 DIF HIGH BPNT: 8.00 pu	Range: 1.00 to 30.00 pu in steps of 0.01
	⇕	BUS ZONE 1 DIF HIGH SET: 15.00 pu	Range: 0.10 to 99.99 pu in steps of 0.01
	⇕	BUS ZONE 1 DIF SEAL-IN: 0.400 s	Range: 0.000 to 65.535 s in steps of 0.001
	⇕	BUS ZONE 1 DIF BLK: Off	Range: FlexLogic operand
	⇕	BUS ZONE 1 DIF TARGET: Latched	Range: Self-reset, Latched, Disabled
	⇧	BUS ZONE 1 DIF EVENTS: Disabled	Range: Disabled, Enabled

Two zones of bus differential protection are provided. The operation of these elements is completely dependent on the dynamic bus replica, which must be defined first. Both biased and unbiased bus differential protection functions are provided for the bus differential zone.

The biased bus differential function has a dual-slope operating characteristic (see figure below) operating in conjunction with saturation detection and a directional comparison principle (see the logic diagram in this section).

Figure 5-86: Biased differential operating characteristic

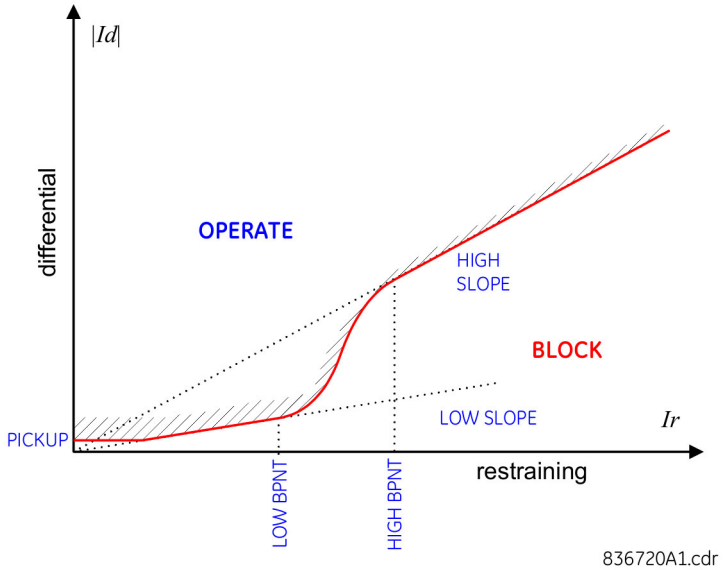

The protected zone input current with the highest magnitude is used as the restraining signal. Stability during heavy external faults is achieved by dynamic CT saturation detection and current flow direction supervision without affecting sensitivity and speed of operation for internal faults.

The differential operating characteristic is divided into two regions. In the region of low differential currents and lower slope, the element operates on a 2-out-of-2 basis, applying both the differential and current directional tests. In the region of high differential currents, the element operates on a dynamic 1-out-of-2 / 2-out-of-2 basis. If the differential current is in this region and CT saturation is detected, both the differential and current directional tests are applied. If CT saturation is ruled out by the saturation detector, the differential protection principle alone is capable of causing the element to operate.

The saturation detector is an integral part of the bus differential element. It has no settings but uses some of the differential characteristic parameters. The flags indicating CT saturation are available on a per phase basis as FlexLogic operands.

The directional principle is an integral part of the biased bus differential element and has no associated settings. The directional element dynamically identifies what appears to be the faulted circuit and compares its current angle with that of the sum of the remaining currents of the protected zone. The element declares a bus fault if the angle is less than 90°. Directional indicating flags signal operation on a per-phase basis and are available as FlexLogic operands.

The unbiased bus differential function checks the magnitude of the differential current against an adjustable threshold. Neither the bias nor the directional principles apply. The operation of the unbiased differential function is associated with separate output operands.

Operation of this element is completely dependent on the dynamic bus replica which must be first defined under bus zone 1. The bus differential element 1 protects the differential zone defined as bus zone 1.

BUS ZONE 1 DIF PICKUP — This setting defines the minimum differential current required for operation of the biased bus differential protection element. This setting is chosen based on the maximum magnitude of the differential current that might be seen under no-load conditions. This setting prevents relay maloperation in the situation when the bus carries little power and the restraining signal is too low to provide enough bias in the first slope region of the differential characteristic.

This setting can also be set above the maximum load level to ensure security during CT trouble conditions. However, voltage supervision or a check-zone are better alternatives.

BUS ZONE 1 DIF LOW SLOPE — This setting defines the percentage bias for the restraining currents, from zero to the lower breakpoint (**LOW BPNT**). This setting determines the sensitivity of the relay for low current internal faults. The value chosen needs to be high enough to accommodate the spurious differential current resulting from inaccuracy of the CTs operating

in their linear mode, i.e. in load conditions and during distant external faults. When adjusting this setting, it must be kept in mind that the restraining signal used by the biased bus differential protection element is created as the maximum of all the input currents.

BUS ZONE 1 DIF LOW BPNT — This setting defines the lower breakpoint of the dual-slope operating characteristic. The percentage bias applied for the restraining current from zero to the value specified as **LOW BPNT** is given by the **LOW SLOPE** setting. This setting needs to be set above the maximum load current. The **LOW BPNT** can be moved to the AC current under which all the CTs are guaranteed to transform without saturation. This includes the effect of residual magnetism. When adjusting this setting, keep in mind that the restraining signal is created as the maximum of all the input currents.

BUS ZONE 1 DIF HIGH SLOPE — This setting defines the percentage bias for the restraining currents above the higher breakpoint (**HIGH BPNT**). This setting affects stability of the relay for heavy external faults. Traditionally, the value chosen for this setting needs to be high enough to accommodate the spurious differential current resulting from saturation of the CTs during heavy external faults. This requirement can be considerably relaxed in favor of sensitivity and speed of operation as the relay detects CT saturation and upon detection applies the directional principle to prevent maloperation. When adjusting this setting, keep in mind that the restraining signal is created as the maximum of all the input currents.

BUS ZONE 1 DIF HIGH BPNT — This setting defines the higher breakpoint of the dual-slope operating characteristic. The percentage bias applied for the restraining current above the value specified as **HIGH BPNT** is given by the **HIGH SLOPE** setting. The **HIGH BPNT** setting needs to be set below the minimum AC current that is likely to saturate the weakest CT feeding the relay. When adjusting this setting, it must be kept in that mind the restraining signal is created as the maximum of all the input currents.

The dual-slope operating characteristic of the biased bus differential protection element is shaped to ensure true percentage bias for high restraining currents (see the following figure). This means that the straight line defining the upper slope intersects the origin of the differential-restraining plane and a discontinuity appears between the low and high slope regions (between the **LOW BPNT** and **HIGH BPNT** settings). This discontinuity is handled by approximating the operate/no-operate boundary of the characteristic using a certain connection function. This ensures smooth transition of the slope from **LOW SLOPE** (lower value) to **HIGH SLOPE** (higher value).

The following parameters of the biased operating characteristic are used by the saturation detector: **LOW SLOPE**, **HIGH SLOPE**, and **HIGH BPNT**. The saturation detector uses these settings to detect specific relations between the differential and restraining currents. The values of these settings are selected based on the aforementioned criteria related to the art of bus differential protection.

BUS ZONE 1 DIF HIGH SET — This setting defines the minimum differential current required for operation of the unbiased bus differential protection function. This setting is based on the maximum magnitude of the differential current that might be seen during heavy external faults causing deep CT saturation. When selecting this setting, keep in mind that the unbiased bus differential protection function uses the full-cycle Fourier measuring algorithm and applies it to pre-filtered samples of the input currents. As a result, the transient measuring errors including the effect of the DC component are below 2%. During heavy CT saturation when the currents are significantly distorted, the magnitude of the differential current as measured by the relay and used by the unbiased bus differential function is significantly lower than both the peak values of the waveform and the true RMS value. The measured magnitude practically reflects the power system frequency component alone. This allows for lower values of the **HIGH SET** setting.

The unbiased (high set) differential function can be virtually disabled by setting its operating threshold, **HIGH SET**, very high.

BUS ZONE 1 DIF SEAL-IN — This setting defines the drop-out time of the seal-in timer applied to the BUS 1 OP FlexLogic operand.

More information on the bus zone differential settings can be found in the Application of Settings chapter.

Figure 5-87: Bus zone 1 differential logic

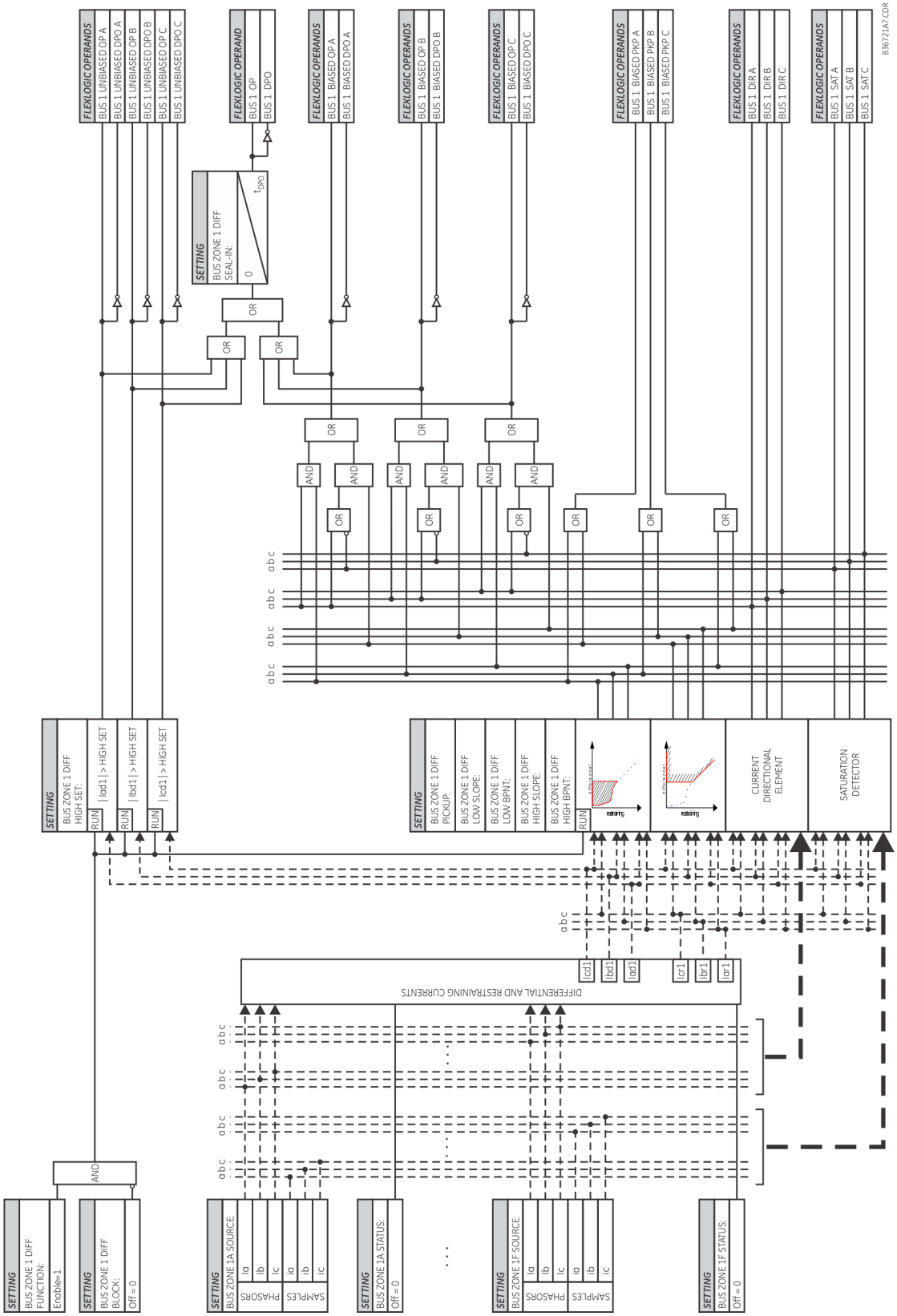

5.7.4 Phase current

5.7.4.1 Menu

SETTINGS ⇨⇩ GROUPED ELEMENTS ⇨ SETTING GROUP 1(6) ⇨⇩ PHASE CURRENT

■ PHASE CURRENT ■	⇔	■ PHASE TOC 1 ■	See page 5-180
	⇩	■ PHASE TOC 2 ■	
	⇩	■ PHASE TOC 3 ■	
	⇩	■ PHASE TOC 4 ■	
	⇩	■ PHASE TOC 5 ■	Note: Seen only if slot F or slot M has an 8H or 8J CT module installed
	⇩	■ PHASE TOC 6 ■	Note: Seen only if slot F or slot M has an 8H or 8J CT module installed
	⇩	■ PHASE IOC 1 ■	See page 5-182
		⇩	
	⇩	■ PHASE IOC 12 ■	
	⇩	■ PHASE ■ DIRECTIONAL 1	See page 5-183
	⇧	■ PHASE ■ DIRECTIONAL 2	

5.7.4.2 Inverse TOC curve characteristics

The inverse time overcurrent curves used by the time overcurrent elements are the IEEE, IEC, GE Type IAC, and I^2t standard curve shapes. This allows for simplified coordination with downstream devices.

If none of these curve shapes is adequate, FlexCurves can be used to customize the inverse time curve characteristics. The definite time curve is also an option that can be appropriate if only simple protection is required.

Table 5-23: Overcurrent curve types

IEEE	IEC	GE type IAC	Other
IEEE Extremely Inverse	IEC Curve A (BS142)	IAC Extremely Inverse	I^2t
IEEE Very Inverse	IEC Curve B (BS142)	IAC Very Inverse	FlexCurves A, B, C, and D
IEEE Moderately Inverse	IEC Curve C (BS142)	IAC Inverse	Recloser Curves
	IEC Short Inverse	IAC Short Inverse	Definite Time

A time dial multiplier setting allows selection of a multiple of the base curve shape (where the time dial multiplier = 1) with the curve shape (**CURVE**) setting. Unlike the electromechanical time dial equivalent, operate times are directly proportional to the time multiplier (**TD MULTIPLIER**) setting value. For example, all times for a multiplier of 10 are 10 times the multiplier 1 or base curve values. Setting the multiplier to zero results in an instantaneous response to all current levels above pickup.

Time overcurrent time calculations are made with an internal *energy capacity* memory variable. When this variable indicates that the energy capacity has reached 100%, a time overcurrent element operates. If less than 100% energy capacity is accumulated in this variable and the current falls below the dropout threshold of 97 to 98% of the pickup value, the variable must be reduced. Two methods of this resetting operation are available: “Instantaneous” and “Timed.” The

"Instantaneous" selection is intended for applications with other relays, such as most static relays, which set the energy capacity directly to zero when the current falls below the reset threshold. The "Timed" selection can be used where the relay must coordinate with electromechanical relays.

The URs calculate operate time corresponding to the values in the range of 1.03 to 20 multiples of the pickup current. Above 20 multiples of the pickup current, URs clamp the operate time to the value at a multiple of 20, resulting in the flat part of the characteristics. Reset time is calculated in the range of 0 to 0.97 multiples of the pickup current.

IEEE curves

The IEEE time overcurrent curve shapes conform to industry standards and the IEEE C37.112-1996 curve classifications for extremely, very, and moderately inverse curves. The IEEE curves are derived from the operate and reset time equations.

$$T = TDM \times \left[\frac{A}{\left(\frac{I}{I_{pickup}}\right)^{p} - 1} + B \right], \quad T_{RESET} = TDM \times \left[\frac{t_r}{1 - \left(\frac{I}{I_{pickup}}\right)^{2}} \right] \qquad \textbf{Eq. 5-5}$$

where

T = operate time (in seconds)
TDM = Multiplier setting
I = input current
I_{pickup} = Pickup Current setting
A, B, p = constants defined in the table
T_{RESET} = reset time in seconds (assuming energy capacity is 100% and RESET is "Timed")
t_r = characteristic constant defined in the table

Table 5-24: IEEE inverse time curve constants

IEEE curve shape	A	B	p	t_r
IEEE Extremely Inverse	28.2	0.1217	2.0000	29.1
IEEE Very Inverse	19.61	0.491	2.0000	21.6
IEEE Moderately Inverse	0.0515	0.1140	0.02000	4.85

Table 5-25: IEEE curve trip times (in seconds)

Multiplier (TDM)	Current (I / I_{pickup})									
	1.5	2.0	3.0	4.0	5.0	6.0	7.0	8.0	9.0	10.0
IEEE Extremely Inverse										
0.5	11.341	4.761	1.823	1.001	0.648	0.464	0.355	0.285	0.237	0.203
1.0	22.682	9.522	3.647	2.002	1.297	0.927	0.709	0.569	0.474	0.407
2.0	45.363	19.043	7.293	4.003	2.593	1.855	1.418	1.139	0.948	0.813
4.0	90.727	38.087	14.587	8.007	5.187	3.710	2.837	2.277	1.897	1.626
6.0	136.090	57.130	21.880	12.010	7.780	5.564	4.255	3.416	2.845	2.439
8.0	181.454	76.174	29.174	16.014	10.374	7.419	5.674	4.555	3.794	3.252
10.0	226.817	95.217	36.467	20.017	12.967	9.274	7.092	5.693	4.742	4.065
IEEE Very Inverse										
0.5	8.090	3.514	1.471	0.899	0.654	0.526	0.450	0.401	0.368	0.345
1.0	16.179	7.028	2.942	1.798	1.308	1.051	0.900	0.802	0.736	0.689
2.0	32.358	14.055	5.885	3.597	2.616	2.103	1.799	1.605	1.472	1.378
4.0	64.716	28.111	11.769	7.193	5.232	4.205	3.598	3.209	2.945	2.756
6.0	97.074	42.166	17.654	10.790	7.849	6.308	5.397	4.814	4.417	4.134
8.0	129.432	56.221	23.538	14.387	10.465	8.410	7.196	6.418	5.889	5.513
10.0	161.790	70.277	29.423	17.983	13.081	10.513	8.995	8.023	7.361	6.891

Multiplier (TDM)	Current (I / I_{pickup})									
	1.5	**2.0**	**3.0**	**4.0**	**5.0**	**6.0**	**7.0**	**8.0**	**9.0**	**10.0**
IEEE Moderately Inverse										
0.5	3.220	1.902	1.216	0.973	0.844	0.763	0.706	0.663	0.630	0.603
1.0	6.439	3.803	2.432	1.946	1.688	1.526	1.412	1.327	1.260	1.207
2.0	12.878	7.606	4.864	3.892	3.377	3.051	2.823	2.653	2.521	2.414
4.0	25.756	15.213	9.729	7.783	6.753	6.102	5.647	5.307	5.041	4.827
6.0	38.634	22.819	14.593	11.675	10.130	9.153	8.470	7.960	7.562	7.241
8.0	51.512	30.426	19.458	15.567	13.507	12.204	11.294	10.614	10.083	9.654
10.0	64.390	38.032	24.322	19.458	16.883	15.255	14.117	13.267	12.604	12.068

IEC curves

For European applications, the relay offers three standard curves defined in IEC 255-4 and British standard BS142. These are defined as IEC Curve A, IEC Curve B, and IEC Curve C. The IEC curves are derived by the operate and reset time equations.

$$T = TDM \times \left[\frac{K}{(I/I_{pickup})^{E} - 1}\right], \quad T_{RESET} = TDM \times \left[\frac{t_r}{1 - (I/I_{pickup})^{2}}\right] \qquad \textbf{Eq. 5-6}$$

where

T = operate time (in seconds)
TDM = Multiplier setting
I = input current
I_{pickup} = Pickup Current setting
K, E = constants defined in the table
t_r = characteristic constant defined in the table
T_{RESET} = reset time in seconds (assuming energy capacity is 100% and **RESET** is "Timed")

Table 5-26: IEC (BS) inverse time curve constants

IEC (BS) curve shape	K	E	t_r
IEC Curve A (BS142)	0.140	0.020	9.7
IEC Curve B (BS142)	13.500	1.000	43.2
IEC Curve C (BS142)	80.000	2.000	58.2
IEC Short Inverse	0.050	0.040	0.500

Table 5-27: IEC curve trip times (in seconds)

Multiplier (TDM)	Current (I / I_{pickup})									
	1.5	**2.0**	**3.0**	**4.0**	**5.0**	**6.0**	**7.0**	**8.0**	**9.0**	**10.0**
IEC Curve A										
0.05	0.860	0.501	0.315	0.249	0.214	0.192	0.176	0.165	0.156	0.149
0.10	1.719	1.003	0.630	0.498	0.428	0.384	0.353	0.330	0.312	0.297
0.20	3.439	2.006	1.260	0.996	0.856	0.767	0.706	0.659	0.623	0.594
0.40	6.878	4.012	2.521	1.992	1.712	1.535	1.411	1.319	1.247	1.188
0.60	10.317	6.017	3.781	2.988	2.568	2.302	2.117	1.978	1.870	1.782
0.80	13.755	8.023	5.042	3.984	3.424	3.070	2.822	2.637	2.493	2.376
1.00	17.194	10.029	6.302	4.980	4.280	3.837	3.528	3.297	3.116	2.971
IEC Curve B										
0.05	1.350	0.675	0.338	0.225	0.169	0.135	0.113	0.096	0.084	0.075
0.10	2.700	1.350	0.675	0.450	0.338	0.270	0.225	0.193	0.169	0.150

Multiplier (TDM)	Current (I / I_{pickup})									
	1.5	**2.0**	**3.0**	**4.0**	**5.0**	**6.0**	**7.0**	**8.0**	**9.0**	**10.0**
0.20	5.400	2.700	1.350	0.900	0.675	0.540	0.450	0.386	0.338	0.300
0.40	10.800	5.400	2.700	1.800	1.350	1.080	0.900	0.771	0.675	0.600
0.60	16.200	8.100	4.050	2.700	2.025	1.620	1.350	1.157	1.013	0.900
0.80	21.600	10.800	5.400	3.600	2.700	2.160	1.800	1.543	1.350	1.200
1.00	27.000	13.500	6.750	4.500	3.375	2.700	2.250	1.929	1.688	1.500
IEC Curve C										
0.05	3.200	1.333	0.500	0.267	0.167	0.114	0.083	0.063	0.050	0.040
0.10	6.400	2.667	1.000	0.533	0.333	0.229	0.167	0.127	0.100	0.081
0.20	12.800	5.333	2.000	1.067	0.667	0.457	0.333	0.254	0.200	0.162
0.40	25.600	10.667	4.000	2.133	1.333	0.914	0.667	0.508	0.400	0.323
0.60	38.400	16.000	6.000	3.200	2.000	1.371	1.000	0.762	0.600	0.485
0.80	51.200	21.333	8.000	4.267	2.667	1.829	1.333	1.016	0.800	0.646
1.00	64.000	26.667	10.000	5.333	3.333	2.286	1.667	1.270	1.000	0.808
IEC Short Inverse										
0.05	0.153	0.089	0.056	0.044	0.038	0.034	0.031	0.029	0.027	0.026
0.10	0.306	0.178	0.111	0.088	0.075	0.067	0.062	0.058	0.054	0.052
0.20	0.612	0.356	0.223	0.175	0.150	0.135	0.124	0.115	0.109	0.104
0.40	1.223	0.711	0.445	0.351	0.301	0.269	0.247	0.231	0.218	0.207
0.60	1.835	1.067	0.668	0.526	0.451	0.404	0.371	0.346	0.327	0.311
0.80	2.446	1.423	0.890	0.702	0.602	0.538	0.494	0.461	0.435	0.415
1.00	3.058	1.778	1.113	0.877	0.752	0.673	0.618	0.576	0.544	0.518

5

IAC curves

The curves for the General Electric type IAC relay family are derived from the formulae:

$$T = TDM \times \left(A + \frac{B}{(I/I_{pkp}) - C} + \frac{D}{((I/I_{pkp}) - C)^2} + \frac{E}{((I/I_{pkp}) - C)^3} \right) \quad , \quad T_{RESET} = TDM \times \left[\frac{t_r}{1 - (I/I_{pkp})^2} \right] \qquad \textbf{Eq. 5-7}$$

where

T = operate time (in seconds)
TDM = Multiplier setting
I = Input current
I_{pkp} = Pickup Current setting
A to E = constants defined in the table
t_r = characteristic constant defined in the table
T_{RESET} = reset time in seconds (assuming energy capacity is 100% and RESET is “Timed”)

Table 5-28: GE type IAC inverse time curve constants

IAC curve shape	A	B	C	D	E	t_r
IAC Extreme Inverse	0.0040	0.6379	0.6200	1.7872	0.2461	6.008
IAC Very Inverse	0.0900	0.7955	0.1000	–1.2885	7.9586	4.678
IAC Inverse	0.2078	0.8630	0.8000	–0.4180	0.1947	0.990
IAC Short Inverse	0.0428	0.0609	0.6200	–0.0010	0.0221	0.222

Table 5-29: GE type IAC curve trip times

Multiplier (TDM)	Current (I / I_{pickup})									
	1.5	**2.0**	**3.0**	**4.0**	**5.0**	**6.0**	**7.0**	**8.0**	**9.0**	**10.0**
IAC Extremely Inverse										
0.5	1.699	0.749	0.303	0.178	0.123	0.093	0.074	0.062	0.053	0.046
1.0	3.398	1.498	0.606	0.356	0.246	0.186	0.149	0.124	0.106	0.093
2.0	6.796	2.997	1.212	0.711	0.491	0.372	0.298	0.248	0.212	0.185
4.0	13.591	5.993	2.423	1.422	0.983	0.744	0.595	0.495	0.424	0.370
6.0	20.387	8.990	3.635	2.133	1.474	1.115	0.893	0.743	0.636	0.556
8.0	27.183	11.987	4.846	2.844	1.966	1.487	1.191	0.991	0.848	0.741
10.0	33.979	14.983	6.058	3.555	2.457	1.859	1.488	1.239	1.060	0.926
IAC Very Inverse										
0.5	1.451	0.656	0.269	0.172	0.133	0.113	0.101	0.093	0.087	0.083
1.0	2.901	1.312	0.537	0.343	0.266	0.227	0.202	0.186	0.174	0.165
2.0	5.802	2.624	1.075	0.687	0.533	0.453	0.405	0.372	0.349	0.331
4.0	11.605	5.248	2.150	1.374	1.065	0.906	0.810	0.745	0.698	0.662
6.0	17.407	7.872	3.225	2.061	1.598	1.359	1.215	1.117	1.046	0.992
8.0	23.209	10.497	4.299	2.747	2.131	1.813	1.620	1.490	1.395	1.323
10.0	29.012	13.121	5.374	3.434	2.663	2.266	2.025	1.862	1.744	1.654
IAC Inverse										
0.5	0.578	0.375	0.266	0.221	0.196	0.180	0.168	0.160	0.154	0.148
1.0	1.155	0.749	0.532	0.443	0.392	0.360	0.337	0.320	0.307	0.297
2.0	2.310	1.499	1.064	0.885	0.784	0.719	0.674	0.640	0.614	0.594
4.0	4.621	2.997	2.128	1.770	1.569	1.439	1.348	1.280	1.229	1.188
6.0	6.931	4.496	3.192	2.656	2.353	2.158	2.022	1.921	1.843	1.781
8.0	9.242	5.995	4.256	3.541	3.138	2.878	2.695	2.561	2.457	2.375
10.0	11.552	7.494	5.320	4.426	3.922	3.597	3.369	3.201	3.072	2.969
IAC Short Inverse										
0.5	0.072	0.047	0.035	0.031	0.028	0.027	0.026	0.026	0.025	0.025
1.0	0.143	0.095	0.070	0.061	0.057	0.054	0.052	0.051	0.050	0.049
2.0	0.286	0.190	0.140	0.123	0.114	0.108	0.105	0.102	0.100	0.099
4.0	0.573	0.379	0.279	0.245	0.228	0.217	0.210	0.204	0.200	0.197
6.0	0.859	0.569	0.419	0.368	0.341	0.325	0.314	0.307	0.301	0.296
8.0	1.145	0.759	0.559	0.490	0.455	0.434	0.419	0.409	0.401	0.394
10.0	1.431	0.948	0.699	0.613	0.569	0.542	0.524	0.511	0.501	0.493

I^2t curves

The I^2t curves are derived as follows:

$$T = TDM \times \left[\frac{100}{\left(\frac{I}{I_{pickup}} \right)^2} \right], \quad T_{RESET} = TDM \times \left[\frac{100}{\left(\frac{I}{I_{pickup}} \right)^{-2}} \right] \qquad \textbf{Eq. 5-8}$$

where

T = Operate time (in seconds)
TDM = Multiplier setting
I = Input current
I_{pickup} = Pickup Current setting
T_{RESET} = reset time in seconds (assuming energy capacity is 100% and RESET is "Timed")

Table 5-30: I^2t curve trip times

Multiplier (TDM)	Current (I / I_{pickup})									
	1.5	**2.0**	**3.0**	**4.0**	**5.0**	**6.0**	**7.0**	**8.0**	**9.0**	**10.0**
0.01	0.44	0.25	0.11	0.06	0.04	0.03	0.02	0.02	0.01	0.01
0.10	4.44	2.50	1.11	0.63	0.40	0.28	0.20	0.16	0.12	0.10
1.00	44.44	25.00	11.11	6.25	4.00	2.78	2.04	1.56	1.23	1.00
10.00	444.44	250.00	111.11	62.50	40.00	27.78	20.41	15.63	12.35	10.00
100.00	4444.4	2500.0	1111.1	625.00	400.00	277.78	204.08	156.25	123.46	100.00
600.00	26666.7	15000.0	6666.7	3750.0	2400.0	1666.7	1224.5	937.50	740.74	600.00

FlexCurves

FlexCurves are described in the FlexCurves section later in this chapter. The curve shapes for the FlexCurves are derived from the formulae:

$$T = TDM \times \left[\text{FlexCurve Time at} \left(\frac{I}{I_{pickup}}\right)\right] \quad \text{when} \left(\frac{I}{I_{pickup}}\right) \geq 1.00$$

Eq. 5-9

$$T_{RESET} = TDM \times \left[\text{FlexCurve Time at} \left(\frac{I}{I_{pickup}}\right)\right] \quad \text{when} \left(\frac{I}{I_{pickup}}\right) \leq 0.98$$

Eq. 5-10

where

T = operate time (in seconds)
TDM = Multiplier setting
I = Input Current
I_{pickup} = Pickup Current setting
T_{RESET} = Reset Time in seconds (assuming energy capacity is 100% and **RESET**: Timed)

Definite time curve

The Definite Time curve shape operates as soon as the pickup level is exceeded for a specified period of time. The base definite time curve delay is in seconds. The curve multiplier of 0.00 to 600.00 makes this delay adjustable from instantaneous to 600.00 seconds in steps of 10 ms. The definite time curve shapes are defined as follows:

$$T = TDM \text{ in seconds, when } I > I_{pickup}$$

Eq. 5-11

$$T_{RESET} = TDM \text{ in seconds}$$

Eq. 5-12

where

T = Operate Time (in seconds)
TDM = Multiplier setting
I = Input Current
I_{pickup} = Pickup Current setting
T_{RESET} = Reset Time in seconds (assuming energy capacity is 100% and RESET: Timed)

Recloser curves

The B30 uses the FlexCurve feature to facilitate programming of 41 recloser curves. See the FlexCurves settings section earlier in this chapter for details.

5.7.4.3 Phase time overcurrent (ANSI 51P, IEC PTOC)

SETTINGS ⇨⇩ GROUPED ELEMENTS ⇨⇩ SETTING GROUP 1(6) ⇨ PHASE CURRENT ⇨ PHASE TOC1(6)

■ PHASE TOC 1 ■	⇔	PHASE TOC1 FUNCTION: Disabled	Range: Disabled, Enabled
	⇩	PHASE TOC1 SIGNAL SOURCE: SRC 1	Range: SRC 1, SRC 2, SRC 3, SRC 4, SRC 5, SRC 6
	⇩	PHASE TOC1 INPUT: Phasor	Range: Phasor, RMS
	⇩	PHASE TOC1 PICKUP: 1.000 pu	Range: 0.020 to 30.000 pu in steps of 0.001
	⇩	PHASE TOC1 CURVE: IEEE Mod Inv	Range: see Overcurrent Curve Types table
	⇩	PHASE TOC1 TD MULTIPLIER: 1.00	Range: 0.00 to 600.00 in steps of 0.01
	⇩	PHASE TOC1 RESET: Instantaneous	Range: Instantaneous, Timed
	⇩	PHASE TOC1 VOLTAGE RESTRAINT: Disabled	Range: Disabled, Enabled
	⇩	PHASE TOC1 BLOCK A: Off	Range: FlexLogic operand
	⇩	PHASE TOC1 BLOCK B: Off	Range: FlexLogic operand
	⇩	PHASE TOC1 BLOCK C: Off	Range: FlexLogic operand
	⇩	PHASE TOC1 TARGET: Self-reset	Range: Self-reset, Latched, Disabled
	⇧	PHASE TOC1 EVENTS: Disabled	Range: Disabled, Enabled

The phase time overcurrent element can provide a specified time-delay operating characteristic versus the applied current or be used as a simple definite time element. The phase current input quantities can be programmed as fundamental phasor magnitude or total waveform RMS magnitude as required by the application.

Two methods of resetting operation are available: “Timed” and “Instantaneous” (see the Inverse TOC Curve Characteristics section earlier for details on curve setup, trip times, and reset operation). When the element is blocked, the time accumulator resets according to the reset characteristic. For example, if the element reset characteristic is set to “Instantaneous” and the element is blocked, the time accumulator clears immediately.

The **PHASE TOC1 PICKUP** setting can be reduced dynamically by a voltage restraint feature (when enabled). This is accomplished via the multipliers (Mvr) corresponding to the phase-phase voltages of the voltage restraint characteristic curve (see the figure); the pickup level is calculated as Mvr times the **PHASE TOC1 PICKUP** setting. If the voltage restraint feature is disabled, the pickup level always remains at the setting value.

Figure 5-88: Phase time overcurrent voltage restraint characteristic

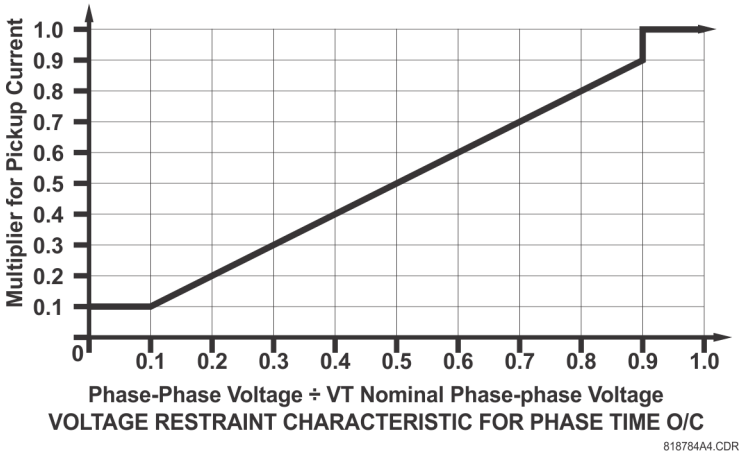

FUNCTION — This setting enables and disables the phase time overcurrent protection element.

SIGNAL SOURCE — Selects the signal source for the phase time overcurrent protection element.

INPUT — Selects how phase current input quantities are interpreted by the B30. Inputs can be selected as fundamental phasor magnitudes or total waveform RMS magnitudes as required by the application.

PICKUP — Specifies the phase time overcurrent pickup level in per-unit values.

CURVE — Selects the time inverse overcurrent curve style.

TD MULTIPLIER — Specifies a multiple of the base curve shape specified by the **CURVE** setting. Programming this value to zero results in an instantaneous response to all current levels above pickup.

RESET — The "Instantaneous" reset method is intended for applications with other relays, such as most static relays, which set the energy capacity directly to zero when the current falls below the reset threshold. The "Timed" reset method can be used where the relay must coordinate with electromechanical relays.

VOLTAGE RESTRAINT — Enables and disables the phase time overcurrent voltage restraint feature.

BLOCK A — Assertion of the operand assigned to this setting blocks phase A of the phase time overcurrent element.

EVENTS — Enables and disables the logging of phase time overcurrent events in the sequence of events recorder.

Figure 5-89: Phase time overcurrent 1 logic

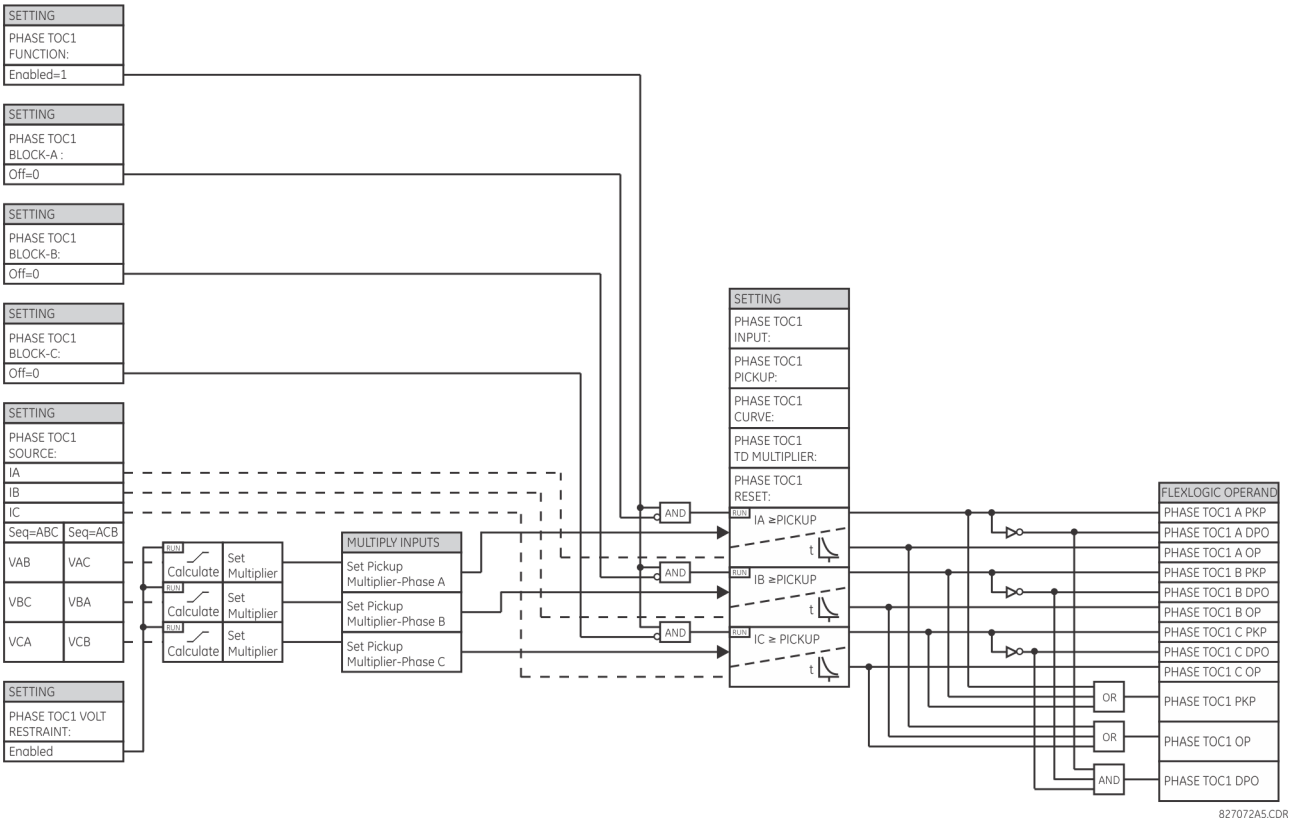

5.7.4.4 Phase instantaneous overcurrent (ANSI 50P, IEC PIOC)

SETTINGS ⇨⇩ GROUPED ELEMENTS ⇨ SETTING GROUP 1(6) ⇨ PHASE CURRENT ⇨ PHASE IOC 1(12)

■ PHASE IOC 1 ■	⇔	PHASE IOC1 FUNCTION: Disabled	Range: Disabled, Enabled
	⇩	PHASE IOC1 SIGNAL SOURCE: SRC 1	Range: SRC 1, SRC 2, SRC 3, SRC 4, SRC 5, SRC 6
	⇩	PHASE IOC1 PICKUP: 1.000 pu	Range: 0.020 to 30.000 pu in steps of 0.001
	⇩	PHASE IOC1 PICKUP DELAY: 0.00 s	Range: 0.00 to 600.00 s in steps of 0.01
	⇩	PHASE IOC1 RESET DELAY: 0.00 s	Range: 0.00 to 600.00 s in steps of 0.01
	⇩	PHASE IOC1 BLOCK A: Off	Range: FlexLogic operand
		⇩	
	⇩	PHASE IOC1 BLOCK C: Off	Range: FlexLogic operand
	⇩	PHASE IOC1 TARGET: Self-reset	Range: Self-reset, Latched, Disabled
	⇧	PHASE IOC1 EVENTS: Disabled	Range: Disabled, Enabled

Six instantaneous overcurrent elements facilitate applications including an external check zone function. For bus configurations of up to five feeders, each with a second set of CTs, a check zone can be implemented by externally summing currents from the independent sets of CTs and connecting the resulting differential current to the sixth current input. In this case, one element monitors the independently formed differential current and supervises the differential protection.

If applied, the overcurrent function responding to the independently formed differential signal is used to supervise the output from the main differential protection with a FlexLogic AND gate before driving the output contact. It is not recommended to use the drop-out operand of the overcurrent function as the block input to the differential element. The differential element includes the saturation detector that responds to specific time relationships between the differential and restraining currents, and therefore, it must be operational all the time in order to function properly.

The phase instantaneous overcurrent element can be used as an instantaneous element with no intentional delay or as a definite time element. The input current is the fundamental phasor magnitude.

FUNCTION — This setting enables and disables the phase instantaneous overcurrent protection element.

SOURCE — Selects the signal source for the phase instantaneous overcurrent protection element.

PICKUP — Specifies the phase instantaneous overcurrent pickup level in per-unit values.

DELAY —Delays the assertion of the PHASE IOC OP operands. It is used to achieve timing coordination with other elements and relays.

RESET DELAY — Specifies a delay for the reset of the phase instantaneous overcurrent element between the operate output state and the return to logic 0 after the input passes outside the defined pickup range. This setting is used to ensure that the relay output contacts are closed long enough to ensure reception by downstream equipment.

BLOCK A — Assertion of the operand assigned to this setting block's phase A of the phase instantaneous overcurrent element.

EVENTS — Enables and disables the logging of phase instantaneous overcurrent events in the sequence of events recorder.

5

Figure 5-90: Phase instantaneous overcurrent 1 logic

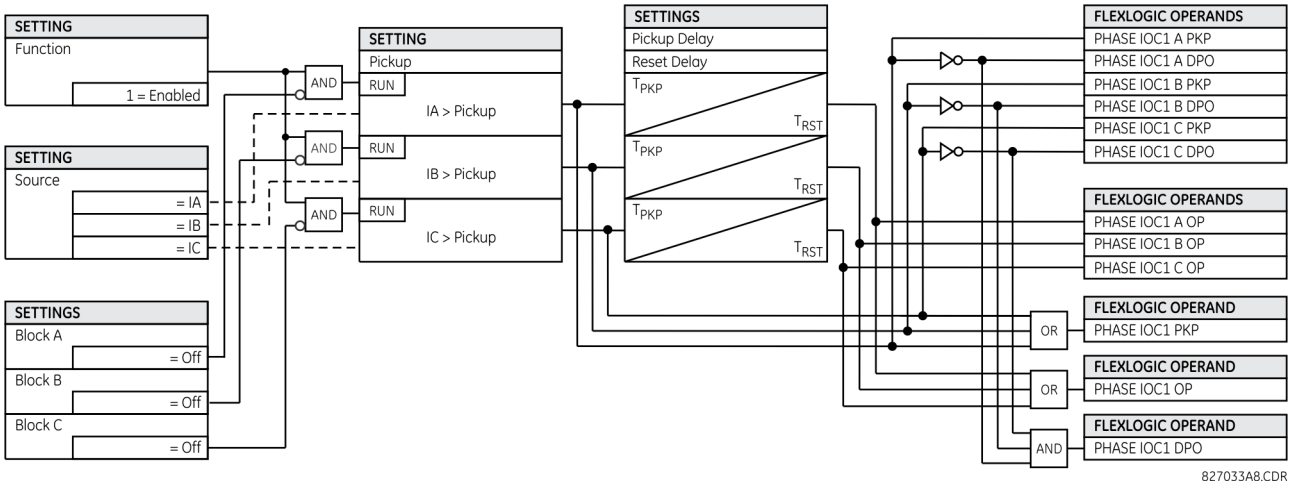

5.7.4.5 Phase directional overcurrent (ANSI 67P, IEC PDOC/PTOC)

SETTINGS ⇨⇩ GROUPED ELEMENTS ⇨ SETTING GROUP 1(6) ⇨ PHASE CURRENT ⇨ PHASE DIRECTIONAL 1(2)

■ PHASE ■ DIRECTIONAL 1	⇔	PHASE DIR 1 FUNCTION: Disabled	Range: Disabled, Enabled
	⇩	PHASE DIR 1 SIGNAL SOURCE: SRC 1	Range: SRC 1, SRC 2, SRC 3, SRC 4, SRC 5, SRC 6
	⇩	PHASE DIR 1 BLOCK: Off	Range: FlexLogic operand

⇕	**PHASE DIR 1 ECA: 30°**	Range: 0 to 359° in steps of 1
⇕	**PHASE DIR POL V1 THRESHOLD: 0.700 pu**	Range: 0.004 to 3.000 pu in steps of 0.001
⇕	**PHASE DIR 1 BLOCK WHEN V MEM EXP: No**	Range: No, Yes
⇕	**PHASE DIR 1 TARGET: Self-reset**	Range: Self-reset, Latched, Disabled
⇧	**PHASE DIR 1 EVENTS: Disabled**	Range: Disabled, Enabled

NOTE The TARGET setting is not user-selectable and forced to "Disabled". If Targets are required from directional elements, it can be achieved by assigning directional element output to a digital element, where targets selection can be used as required.

The phase directional elements (one for each of phases A, B, and C) determine the phase current flow direction for steady state and fault conditions and can be used to control the operation of the phase overcurrent elements via the **BLOCK** inputs of these elements.

Figure 5-91: Phase A directional polarization

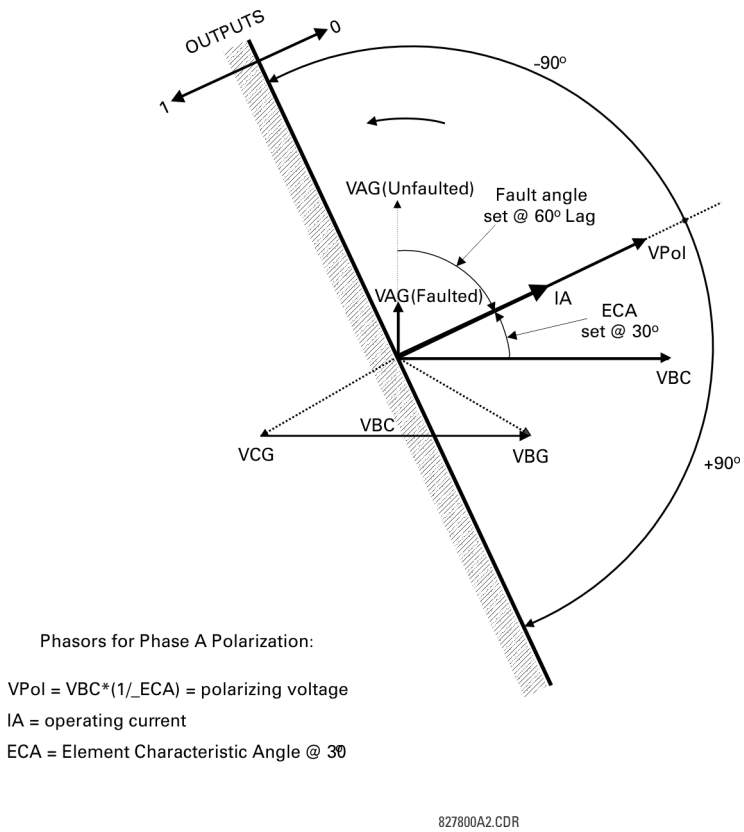

This element is intended to apply a block signal to an overcurrent element to prevent an operation when current is flowing in a particular direction. The direction of current flow is determined by measuring the phase angle between the current from the phase CTs and the line-line voltage from the VTs, based on the 90° or quadrature connection. If there is a requirement to supervise overcurrent elements for flows in opposite directions, such as can happen through a bus-tie breaker, two phase directional elements should be programmed with opposite element characteristic angle (ECA) settings.

To increase security for three phase faults very close to the VTs used to measure the polarizing voltage, a voltage memory feature is incorporated. This feature stores the polarizing voltage the moment before the voltage collapses, and uses it to determine direction. The voltage memory remains valid for one second after the voltage has collapsed.

The main component of the phase directional element is the phase angle comparator with two inputs: the operating signal (phase current) and the polarizing signal (the line voltage, shifted in the leading direction by the characteristic angle, ECA).

The table shows the operating and polarizing signals used for phase directional control.

Table 5-31: Operating and polarizing signals

Phase	Operating signal	Polarizing signal V_{pol}	
		ABC phase sequence	ACB phase sequence
A	angle of IA	angle of VBC × (1∠ECA)	angle of VCB × (1∠ECA)
B	angle of IB	angle of VCA × (1∠ECA)	angle of VAC × (1∠ECA)
C	angle of IC	angle of VAB × (1∠ECA)	angle of VBA × (1∠ECA)

Mode of operation

- When the function is "Disabled" or the operating current is below 5% × CT nominal, the element output is logic "0"
- When the function is "Enabled," the operating current is above 5% × CT nominal, and the polarizing voltage is above the **PRODUCT SETUP ⇨⇩ DISPLAY PROPERTIES ⇨⇩ VOLTAGE CUT-OFF LEVEL** value, the element output is dependent on the phase angle between the operating and polarizing signals:
  - The element output is logic "0" when the operating current is within polarizing voltage ±90°
  - For all other angles, the element output is logic "1"
- Once the voltage memory has expired, the phase overcurrent elements under directional control can be set to block or trip on overcurrent as follows:
  - When **BLOCK WHEN V MEM EXP** is set to "Yes," the directional element blocks the operation of any phase overcurrent element under directional control when voltage memory expires
  - When **BLOCK WHEN V MEM EXP** is set to "No," the directional element allows tripping of phase overcurrent elements under directional control when voltage memory expires

In all cases, directional blocking is permitted to resume when the polarizing voltage becomes greater than the polarizing voltage threshold.

Settings

PHASE DIR 1 FUNCTION — This setting enables and disables the phase directional overcurrent protection element.

PHASE DIR 1 SIGNAL SOURCE — This setting is used to select the source for the operating and polarizing signals. The operating current for the phase directional element is the phase current for the selected current source. The polarizing voltage is the line voltage from the phase VTs, based on the 90° or quadrature connection and shifted in the leading direction by the element characteristic angle (ECA).

PHASE DIR 1 BLOCK — Assertion of the operand assigned to this setting blocks operation of the phase directional overcurrent element.

PHASE DIR 1 ECA — This setting specifies the element characteristic angle, that is, the angle by which the polarizing voltage is shifted in the leading direction to achieve dependable operation. In the design of the UR-series elements, a block is applied to an element by asserting logic 1 at the blocking input. Program the phase directional overcurrent element using this setting so that the output is logic 1 for current in the non-tripping direction.

PHASE DIR 1 POL V THRESHOLD — This setting is used to establish the minimum level of voltage for which the phase angle measurement is healthy and reliable. Do not set this setting too low because the element can continue using the actual voltage already distorted by the fault instead of using healthy memory voltage—this can cause wrong directional discrimination.

PHASE DIR 1 BLOCK WHEN V MEM EXP — This setting is used to select the required operation upon expiration of voltage memory. When set to "Yes," the directional element blocks the operation of any phase overcurrent element under directional control, when voltage memory expires. When set to "No," the directional element allows tripping of phase overcurrent elements under directional control.

PHASE DIR 1 EVENTS — This setting enables and disables the logging of phase directional overcurrent events in the sequence of events recorder.

NOTE

The phase directional element responds to the forward load current. In the case of a following reverse fault, the element needs some time—in the order of 8 ms—to establish a blocking signal. Some protection elements, such as instantaneous overcurrent, respond to reverse faults before the blocking signal is established. Therefore, a coordination time of at least 10 ms must be added to all the instantaneous protection elements under the supervision of the phase directional element. If current reversal is of concern, a longer delay—in the order of 20 ms—is needed.

Figure 5-92: Phase directional logic

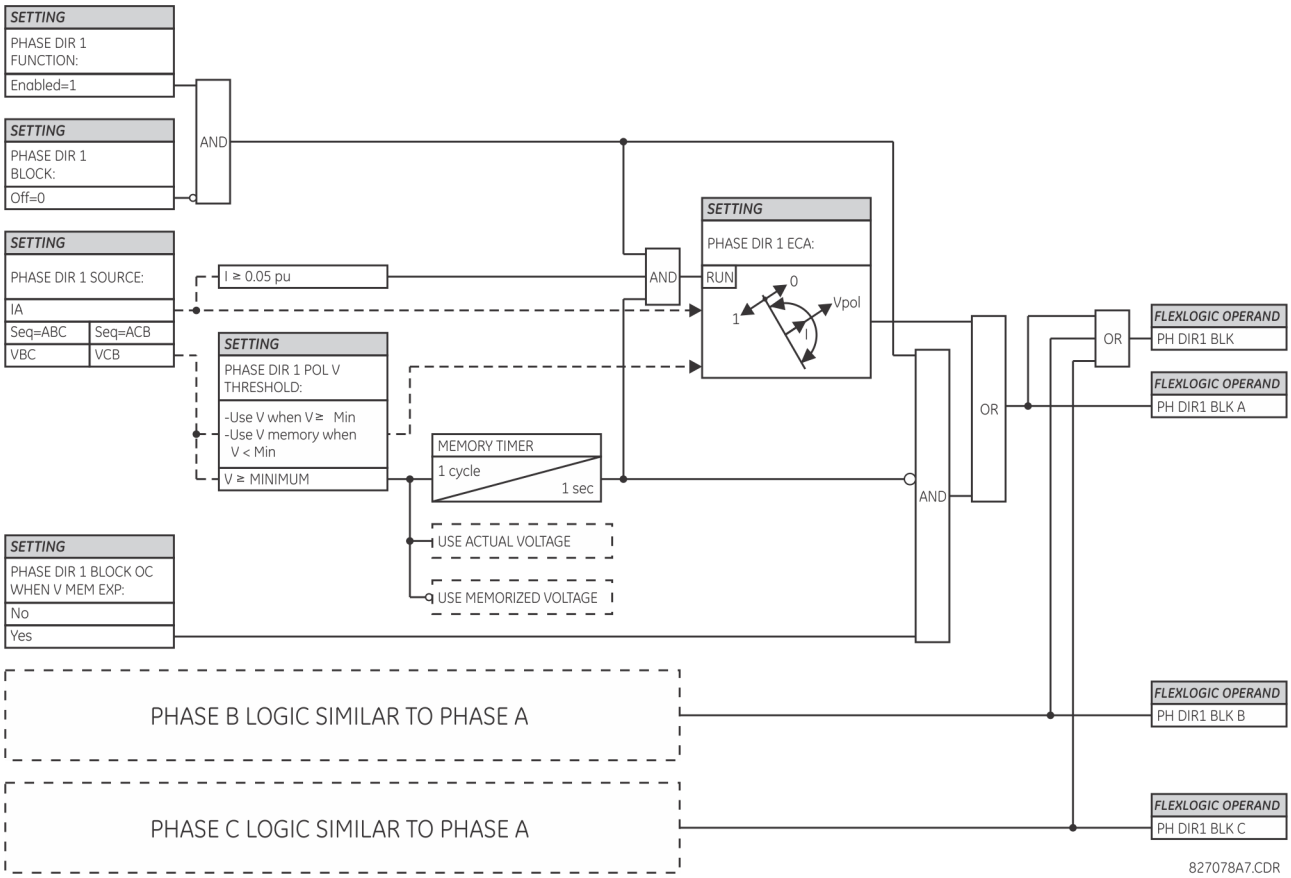

5.7.5 Neutral current

5.7.5.1 Menu

SETTINGS ⇨⇩ GROUPED ELEMENTS ⇨ SETTING GROUP 1(6) ⇨⇩ NEUTRAL CURRENT

■ NEUTRAL CURRENT ■	⇔	■ NEUTRAL TOC 1 ■	See below

⇩

⇕	■ NEUTRAL TOC 6 ■	
⇕	■ NEUTRAL IOC 1 ■	See page 5-188
	⇩	
⇧	■ NEUTRAL IOC 6 ■	

5.7.5.2 Neutral time overcurrent (ANSI 51N, IEC PTOC)

SETTINGS ⇨⇩ GROUPED ELEMENTS ⇨ SETTING GROUP 1(6) ⇨⇩ NEUTRAL CURRENT ⇨ NEUTRAL TOC1(6)

■ NEUTRAL TOC 1 ■	⇔	NEUTRAL TOC1 FUNCTION: Disabled	Range: Disabled, Enabled
	⇕	NEUTRAL TOC1 SIGNAL SOURCE: SRC 1	Range: SRC 1, SRC 2, SRC 3, SRC 4, SRC 5, SRC 6
	⇕	NEUTRAL TOC1 INPUT: Phasor	Range: Phasor, RMS
	⇕	NEUTRAL TOC1 PICKUP: 1.000 pu	Range: 0.020 to 30.000 pu in steps of 0.001
	⇕	NEUTRAL TOC1 CURVE: IEEE Mod Inv	Range: see Overcurrent Curve Types table
	⇕	NEUTRAL TOC1 TD MULTIPLIER: 1.00	Range: 0.00 to 600.00 in steps of 0.01
	⇕	NEUTRAL TOC1 RESET: Instantaneous	Range: Instantaneous, Timed
	⇕	NEUTRAL TOC1 BLOCK: Off	Range: FlexLogic operand
	⇕	NEUTRAL TOC1 TARGET: Self-reset	Range: Self-reset, Latched, Disabled
	⇧	NEUTRAL TOC1 EVENTS: Disabled	Range: Disabled, Enabled

The neutral time overcurrent element can provide a desired time-delay operating characteristic versus the applied current or be used as a simple definite time element. The neutral current input value is a quantity calculated as 3I0 from the phase currents and can be programmed as fundamental phasor magnitude or total waveform RMS magnitude as required by the application.

Two methods of resetting operation are available: "Timed" and "Instantaneous" (see the Inverse TOC Curve Characteristics section for details on curve setup, trip times, and reset operation). When the element is blocked, the time accumulator resets according to the reset characteristic. For example, if the element reset characteristic is set to "Instantaneous" and the element is blocked, the time accumulator clears immediately.

NEUTRAL TOC1 FUNCTION — This setting enables and disables the neutral time overcurrent protection element.

NEUTRAL TOC1 SIGNAL SOURCE — This setting selects the signal source for the neutral time overcurrent protection element.

NEUTRAL TOC1 INPUT — This setting selects how neutral current input quantities are interpreted by the B30. Inputs can be selected as fundamental phasor magnitudes or total waveform RMS magnitudes as required by the application.

NEUTRAL TOC1 PICKUP — This setting specifies the neutral time overcurrent pickup level in per-unit values.

NEUTRAL TOC1 CURVE — This setting selects the inverse time overcurrent curve style.

NEUTRAL TOC1 TD MULTIPLIER — This setting specifies a multiple of the base curve shape specified by the **CURVE** setting. Programming this value to zero results in an instantaneous response to all current levels above pickup.

NEUTRAL TOC1 RESET — The "Instantaneous" reset method is intended for applications with other relays, such as most static relays, which set the energy capacity directly to zero when the current falls below the reset threshold. The "Timed" reset method can be used where the relay must coordinate with electromechanical relays.

NEUTRAL TOC1 BLOCK — Assertion of the operand assigned to this setting blocks operation of the neutral time overcurrent element.

NEUTRAL TOC1 EVENTS — This setting enables and disables the logging of neutral time overcurrent events in the sequence of events recorder.

Figure 5-93: Neutral time overcurrent 1 logic

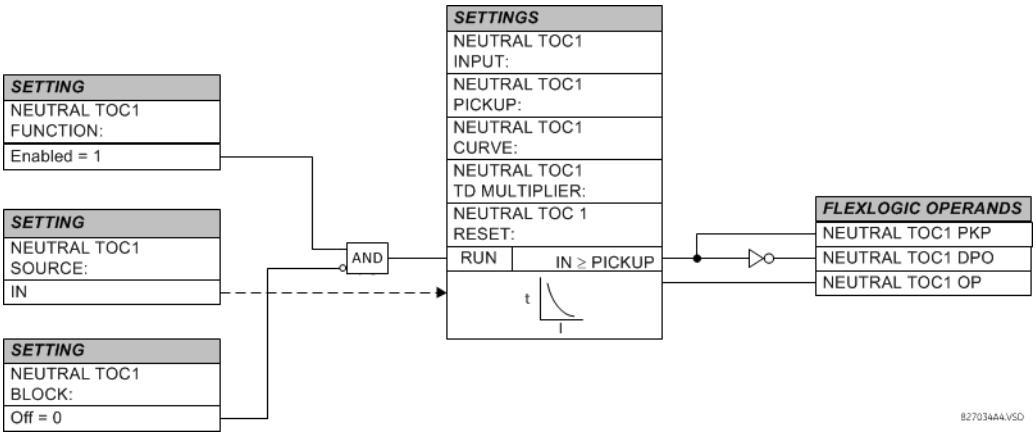

5

5.7.5.3 Neutral instantaneous overcurrent (ANSI 50N, IEC PIOC)

SETTINGS ⇨⇩ GROUPED ELEMENTS ⇨ SETTING GROUP 1(6) ⇨⇩ NEUTRAL CURRENT ⇨⇩ NEUTRAL IOC1(6)

■ NEUTRAL IOC 1 ■	⇔	NEUTRAL IOC1 FUNCTION: Disabled	Range: Disabled, Enabled
	⇩	NEUTRAL IOC1 SIGNAL SOURCE: SRC 1	Range: SRC 1, SRC 2, SRC 3, SRC 4, SRC 5, SRC 6
	⇩	NEUTRAL IOC1 PICKUP: 1.000 pu	Range: 0.020 to 30.000 pu in steps of 0.001
	⇩	NEUTRAL IOC1 PICKUP DELAY: 0.00 s	Range: 0.00 to 600.00 s in steps of 0.01
	⇩	NEUTRAL IOC1 RESET DELAY: 0.00 s	Range: 0.00 to 600.00 s in steps of 0.01
	⇩	NEUTRAL IOC1 BLOCK: Off	Range: FlexLogic operand
	⇩	NEUTRAL IOC1 TARGET: Self-reset	Range: Self-reset, Latched, Disabled
	⇩	NEUTRAL IOC1 EVENTS: Disabled	Range: Disabled, Enabled

The neutral instantaneous overcurrent element can be used as an instantaneous function with no intentional delay or as a definite time function. The element essentially responds to the magnitude of a neutral current fundamental frequency phasor calculated from the phase currents. A positive-sequence restraint is applied for better performance. A small portion (6.25%) of the positive-sequence current magnitude is subtracted from the zero-sequence current magnitude when forming the operating quantity of the element as follows:

$$I_{op} = 3 \times (|I_0| - K \times |I_1|) \text{ where } K = 1/16 \qquad \textbf{Eq. 5-13}$$

The positive-sequence restraint allows for more sensitive settings by counterbalancing spurious zero-sequence currents resulting from:

- System unbalances under heavy load conditions
- Transformation errors of current transformers (CTs) during double-line and three-phase faults
- Switch-off transients during double-line and three-phase faults

The positive-sequence restraint must be considered when testing for pickup accuracy and response time (multiple of pickup). The operating quantity depends on how test currents are injected into the relay, where single-phase injection is $I_{op} = 0.9375 \times I_{injected}$ and three-phase pure zero-sequence injection is $I_{op} = 3 \times I_{injected}$

NEUTRAL IOC1 FUNCTION — This setting enables and disables the neutral instantaneous overcurrent protection element.

NEUTRAL IOC1 SIGNAL SOURCE — This setting selects the signal source for the neutral instantaneous overcurrent protection element.

NEUTRAL IOC1 PICKUP — This setting specifies the neutral instantaneous overcurrent pickup level in per-unit values.

NEUTRAL IOC1 PICKUP DELAY — This setting delays the assertion of the NEUTRAL IOC OP operands. It is used to achieve timing coordination with other elements and relays.

NEUTRAL IOC1 RESET DELAY — This setting specifies a delay for the reset of the neutral instantaneous overcurrent element between the operate output state and the return to logic 0 after the input passes outside the defined pickup range. This setting is used to ensure that the relay output contacts are closed long enough to ensure reception by downstream equipment.

NEUTRAL IOC1 BLOCK — Assertion of the operand assigned to this setting blocks operation of the neutral instantaneous overcurrent element.

NEUTRAL IOC1 EVENTS — This setting enables and disables the logging of neutral instantaneous overcurrent events in the sequence of events recorder.

Figure 5-94: Neutral IOC1 logic

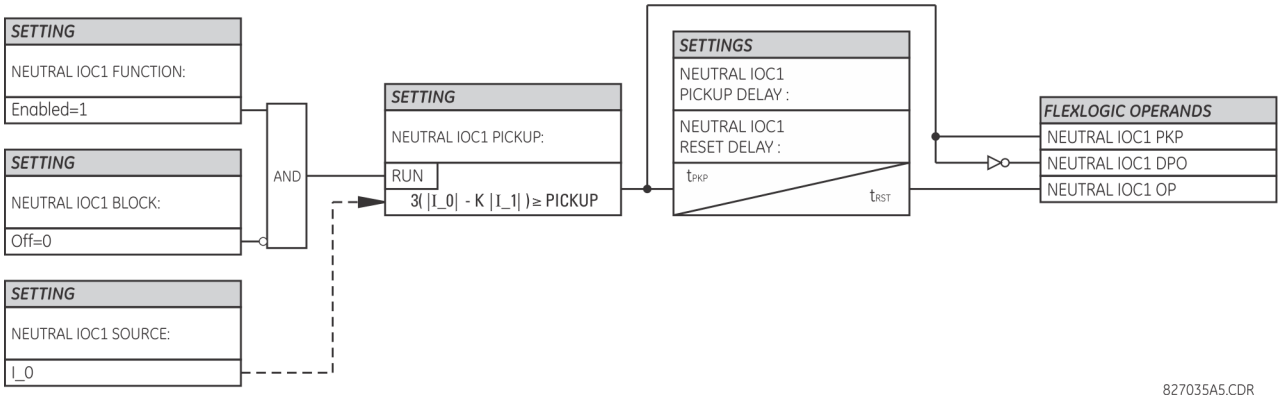

5.7.6 Ground current

5.7.6.1 Menu

SETTINGS ⇨⇩ GROUPED ELEMENTS ⇨ SETTING GROUP 1(6) ⇨⇩ GROUND CURRENT

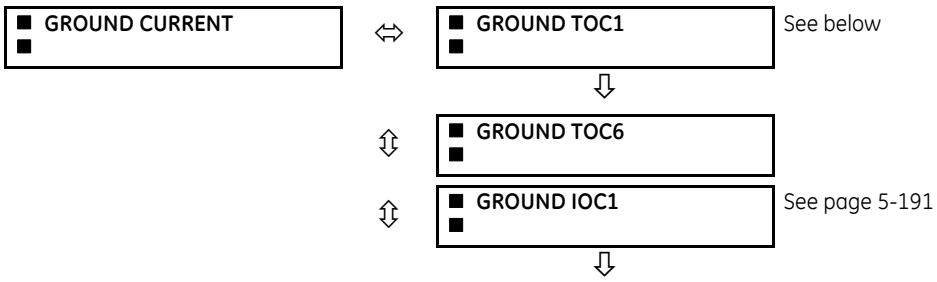

⇧	■ GROUND IOC6 ■

5.7.6.2 Ground time overcurrent (ANSI 51G, IEC PTOC)

SETTINGS ⇨⇩ GROUPED ELEMENTS ⇨ SETTING GROUP 1(6) ⇨⇩ GROUND CURRENT ⇨ GROUND TOC1(6)

■ GROUND TOC1 ■	⇔	GROUND TOC1 FUNCTION: Disabled	Range: Disabled, Enabled
	⇩	GROUND TOC1 SIGNAL SOURCE: SRC 1	Range: SRC 1, SRC 2, SRC 3, SRC 4, SRC 5, SRC 6
	⇩	GROUND TOC1 INPUT: Phasor	Range: Phasor, RMS
	⇩	GROUND TOC1 PICKUP: 1.000 pu	Range: 0.020 to 30.000 pu in steps of 0.001
	⇩	GROUND TOC1 CURVE: IEEE Mod Inv	Range: see the Overcurrent Curve Types table
	⇩	GROUND TOC1 TD MULTIPLIER: 1.00	Range: 0.00 to 600.00 in steps of 0.01
	⇩	GROUND TOC1 RESET: Instantaneous	Range: Instantaneous, Timed
	⇩	GROUND TOC1 BLOCK: Off	Range: FlexLogic operand
	⇩	GROUND TOC1 TARGET: Self-reset	Range: Self-reset, Latched, Disabled
	⇧	GROUND TOC1 EVENTS: Disabled	Range: Disabled, Enabled

This element can provide a required time-delay operating characteristic versus the applied current or be used as a simple definite time element. The ground current input value is the quantity measured by the ground input CT and is the fundamental phasor or RMS magnitude. Two methods of resetting operation are available: "Timed" and "Instantaneous" (see the Inverse TOC Curve Characteristics section for details). When the element is blocked, the time accumulator resets according to the reset characteristic. For example, if the element reset characteristic is set to "Instantaneous" and the element is blocked, the time accumulator clears immediately.

GROUND TOC1 FUNCTION — This setting enables and disables the ground time overcurrent protection element.

GROUND TOC1 SIGNAL SOURCE — This setting selects the signal source for the ground time overcurrent protection element.

GROUND TOC1 INPUT — This setting selects how ground current input quantities are interpreted by the B30. Inputs can be selected as fundamental phasor magnitudes or total waveform RMS magnitudes as required by the application.

GROUND TOC1 PICKUP — This setting specifies the ground time overcurrent pickup level in per-unit values.

GROUND TOC1 CURVE — This setting selects the inverse time overcurrent curve style.

GROUND TOC1 TD MULTIPLIER — This setting specifies a multiple of the base curve shape specified by the **CURVE** setting. Programming this value to zero results in an instantaneous response to all current levels above pickup.

GROUND TOC1 RESET — The "Instantaneous" reset method is intended for applications with other relays, such as most static relays, which set the energy capacity directly to zero when the current falls below the reset threshold. The "Timed" reset method can be used where the relay must coordinate with electromechanical relays.

GROUND TOC1 BLOCK — Assertion of the operand assigned to this setting blocks operation of the ground time overcurrent element.

GROUND TOC1 EVENTS — This setting enables and disables the logging of ground time overcurrent events in the sequence of events recorder.

NOTE

These elements measure the current that is connected to the ground channel of a CT/VT module. The conversion range of a standard channel is from 0.02 to 46 times the CT rating.

NOTE

This channel can be also equipped with a sensitive input. The conversion range of a sensitive channel is from 0.002 to 4.6 times the CT rating.

Figure 5-95: Ground TOC1 logic

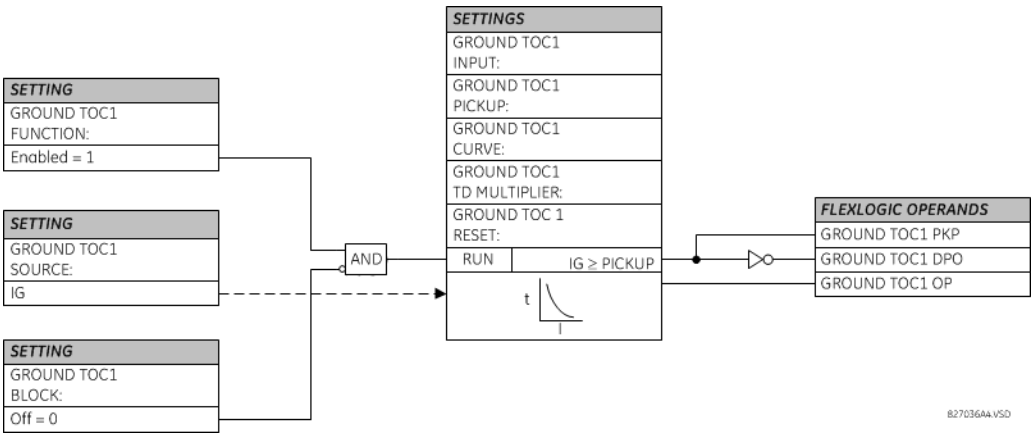

5.7.6.3 Ground instantaneous overcurrent (ANSI 50G, IEC PIOC)

SETTINGS ⇨⇩ GROUPED ELEMENTS ⇨ SETTING GROUP 1(6) ⇨⇩ GROUND CURRENT ⇨⇩ GROUND IOC1(6)

■ **GROUND IOC1** ■	⇔	**GROUND IOC1 FUNCTION: Disabled**	Range: Disabled, Enabled
	⇩	**GROUND IOC1 SIGNAL SOURCE: SRC 1**	Range: SRC 1, SRC 2, SRC 3, SRC 4, SRC 5, SRC 6
	⇩	**GROUND IOC1 PICKUP: 1.000 pu**	Range: 0.020 to 30.000 pu in steps of 0.001
	⇩	**GROUND IOC1 PICKUP DELAY: 0.00 s**	Range: 0.00 to 600.00 s in steps of 0.01
	⇩	**GROUND IOC1 RESET DELAY: 0.00 s**	Range: 0.00 to 600.00 s in steps of 0.01
	⇩	**GROUND IOC1 BLOCK: Off**	Range: FlexLogic operand
	⇩	**GROUND IOC1 TARGET: Self-reset**	Range: Self-reset, Latched, Disabled
	⇧	**GROUND IOC1 EVENTS: Disabled**	Range: Disabled, Enabled

The ground instantaneous overcurrent element can be used as an instantaneous element with no intentional delay or as a definite time element. The ground current input is the quantity measured by the ground input CT and is the fundamental phasor magnitude.

NOTE

These elements measure the current that is connected to the ground channel of a CT/VT module. The conversion range of a standard channel is from 0.02 to 46 times the CT rating.

NOTE

This channel can be equipped with a standard or sensitive input. The conversion range of a sensitive channel is from 0.002 to 4.6 times the CT rating.

Figure 5-96: Ground IOC1 logic

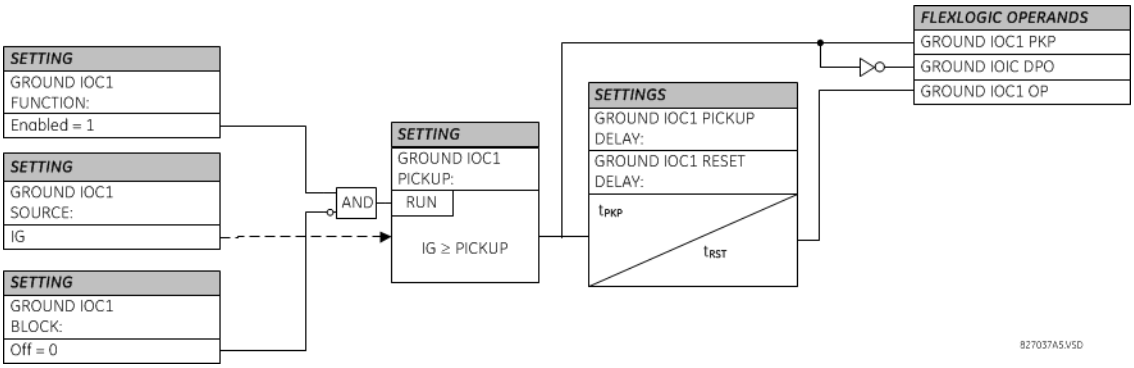

5.7.7 Breaker failure (ANSI 50BF)

SETTINGS ⇨⇩ GROUPED ELEMENTS ⇨ SETTING GROUP 1(6) ⇨ BREAKER FAILURE ⇨ BREAKER FAILURE 1(6)

■ **BREAKER FAILURE 1** ■	⇔	**BF1 FUNCTION: Disabled**	Range: Disabled, Enabled
	⇕	**BF1 MODE: 3-Pole**	Range: 3-Pole, 1-Pole
	⇕	**BF1 SOURCE: SRC 1**	Range: SRC 1, SRC 2, SRC 3, SRC 4, SRC 5, SRC 6
	⇕	**BF1 USE AMP SUPV: Yes**	Range: Yes, No
	⇕	**BF1 USE SEAL-IN: Yes**	Range: Yes, No
	⇕	**BF1 3-POLE INITIATE: Off**	Range: FlexLogic operand
	⇕	**BF1 BLOCK: Off**	Range: FlexLogic operand
	⇕	**BF1 PH AMP SUPV PICKUP: 1.050 pu**	Range: 0.020 to 30.000 pu in steps of 0.001
	⇕	**BF1 N AMP SUPV PICKUP: 1.050 pu**	Range: 0.020 to 30.000 pu in steps of 0.001
	⇕	**BF1 USE TIMER 1: Yes**	Range: Yes, No
	⇕	**BF1 TIMER 1 PICKUP DELAY: 0.000 s**	Range: 0.000 to 65.535 s in steps of 0.001
	⇕	**BF1 USE TIMER 2: Yes**	Range: Yes, No
	⇕	**BF1 TIMER 2 PICKUP DELAY: 0.000 s**	Range: 0.000 to 65.535 s in steps of 0.001
	⇕	**BF1 USE TIMER 3: Yes**	Range: Yes, No

⇕	**BF1 TIMER 3 PICKUP DELAY: 0.000 s**	Range: 0.000 to 65.535 s in steps of 0.001
⇕	**BF1 BKR POS1 ϕA/3P: Off**	Range: FlexLogic operand
⇕	**BF1 BKR POS2 ϕA/3P: Off**	Range: FlexLogic operand
⇕	**BF1 BREAKER TEST ON: Off**	Range: FlexLogic operand
⇕	**BF1 PH AMP HISET PICKUP: 1.050 pu**	Range: 0.020 to 30.000 pu in steps of 0.001
⇕	**BF1 N AMP HISET PICKUP: 1.050 pu**	Range: 0.020 to 30.000 pu in steps of 0.001
⇕	**BF1 PH AMP LOSET PICKUP: 1.050 pu**	Range: 0.020 to 30.000 pu in steps of 0.001
⇕	**BF1 N AMP LOSET PICKUP: 1.050 pu**	Range: 0.020 to 30.000 pu in steps of 0.001
⇕	**BF1 LOSET TIME DELAY: 0.000 s**	Range: 0.000 to 65.535 s in steps of 0.001
⇕	**BF1 TRIP DROPOUT DELAY: 0.000 s**	Range: 0.000 to 65.535 s in steps of 0.001
⇕	**BF1 TARGET: Self-reset**	Range: Self-reset, Latched, Disabled
⇕	**BF1 EVENTS: Disabled**	Range: Disabled, Enabled
⇕	**BF1 PH A INITIATE: Off**	Range: FlexLogic operand Valid only for 1-Pole breaker failure schemes
⇕	**BF1 PH B INITIATE: Off**	Range: FlexLogic operand Valid only for 1-Pole breaker failure schemes
⇕	**BF1 PH C INITIATE: Off**	Range: FlexLogic operand Valid only for 1-Pole breaker failure schemes
⇕	**BF1 BKR POS1 ϕB: Off**	Range: FlexLogic operand Valid only for 1-Pole breaker failure schemes
⇕	**BF1 BKR POS1 ϕC: Off**	Range: FlexLogic operand Valid only for 1-Pole breaker failure schemes
⇕	**BF1 BKR POS2 ϕB: Off**	Range: FlexLogic operand Valid only for 1-Pole breaker failure schemes
⇑	**BF1 BKR POS2 ϕC: Off**	Range: FlexLogic operand Valid only for 1-Pole breaker failure schemes

In general, a breaker failure scheme determines that a breaker signaled to trip has not cleared a fault within a definite time, so further tripping action must be performed. Tripping from the breaker failure scheme should trip all breakers, both local and remote, that can supply current to the faulted zone. Usually operation of a breaker failure element causes clearing of a larger section of the power system than the initial trip. Because breaker failure can result in tripping a large number of breakers and this affects system safety and stability, a very high level of security is required.

Two schemes are provided: one for three-pole tripping only (identified by the name "3BF") and one for three pole plus single-pole operation (identified by the name "1BF"). The philosophy used in these schemes is identical. The operation of a breaker failure element includes three stages: initiation, determination of a breaker failure condition, and output.

Initiation stage

A FlexLogic operand representing the protection trip signal initially sent to the breaker must be selected to initiate the scheme. The initiating signal is sealed-in if primary fault detection can reset before the breaker failure timers have finished timing. The seal-in is supervised by current level, so it is reset when the fault is cleared. If desired, an incomplete sequence seal-in reset can be implemented by using the initiating operand to also initiate a FlexLogic timer, set longer than any breaker failure timer, whose output operand is selected to block the breaker failure scheme.

Schemes can be initiated either directly or with current level supervision. It is particularly important in any application to decide if a current-supervised initiate is to be used. The use of a current-supervised initiate results in the breaker failure element not being initiated for a breaker that has very little or no current flowing through it, which can be the case for transformer faults. For those situations where it is required to maintain breaker fail coverage for fault levels below the **BF1 PH AMP SUPV PICKUP** or the **BF1 N AMP SUPV PICKUP** setting, do not use a current supervised initiate. Utilize this feature for those situations where coordinating margins can be reduced when high speed reclosing is used. Thus, if this choice is made, fault levels must always be above the supervision pickup levels for dependable operation of the breaker fail scheme. This can also occur in breaker-and-a-half or ring bus configurations where the first breaker closes into a fault; the protection trips and attempts to initiate breaker failure for the second breaker, which is in the process of closing, but does not yet have current flowing through it.

When the scheme is initiated, it immediately sends a trip signal to the breaker initially signaled to trip (this feature is usually described as re-trip). This reduces the possibility of widespread tripping that results from a declaration of a failed breaker.

Determination of a breaker failure condition

The schemes determine a breaker failure condition via three paths. Each of these paths is equipped with a time delay, after which a failed breaker is declared and trip signals are sent to all breakers required to clear the zone. The delayed paths are associated with breaker failure timers 1, 2, and 3, which are intended to have delays increasing with increasing timer numbers. These delayed paths are individually enabled to allow for maximum flexibility.

Timer 1 logic (early path) is supervised by a fast-operating breaker auxiliary contact. If the breaker is still closed (as indicated by the auxiliary contact) and fault current is detected after the delay interval, an output is issued. Operation of the breaker auxiliary switch indicates that the breaker has mechanically operated. The continued presence of current indicates that the breaker has failed to interrupt the circuit.

Timer 2 logic (main path) is not supervised by a breaker auxiliary contact. If fault current is detected after the delay interval, an output is issued. This path is intended to detect a breaker that opens mechanically but fails to interrupt fault current; the logic therefore does not use a breaker auxiliary contact.

The timer 1 and 2 paths provide two levels of current supervision, high-set and low-set, that allow the supervision level to change from a current that flows before a breaker inserts an opening resistor into the faulted circuit to a lower level after resistor insertion. The high-set detector is enabled after timeout of timer 1 or 2, along with a timer that enables the low-set detector after its delay interval. The delay interval between high-set and low-set is the expected breaker opening time. Both current detectors provide a fast operating time for currents at small multiples of the pickup value. The overcurrent detectors are required to operate after the breaker failure delay interval in case current still flows through the breaker, and they are supervised by a fast reset element described as follows.

Timer 3 logic (slow path) is supervised by a breaker auxiliary contact and a control switch contact used to indicate that the breaker is in or out-of-service, disabling this path when the breaker is out-of-service for maintenance. There is no current level check in this logic as it is intended to detect low magnitude faults and it is therefore the slowest to operate.

Output

The outputs from the schemes are:

- FlexLogic operands that report on the operation of portions of the scheme
- FlexLogic operand used to re-trip the protected breaker
- FlexLogic operands that initiate tripping required to clear the faulted zone. The trip output can be sealed-in for an adjustable period.
- Target message indicating a failed breaker has been declared
- Illumination of the faceplate Trip LED (and the Phase A, B, or C LED, if applicable)

Main path sequence

Figure 5-97: Breaker failure main path sequence

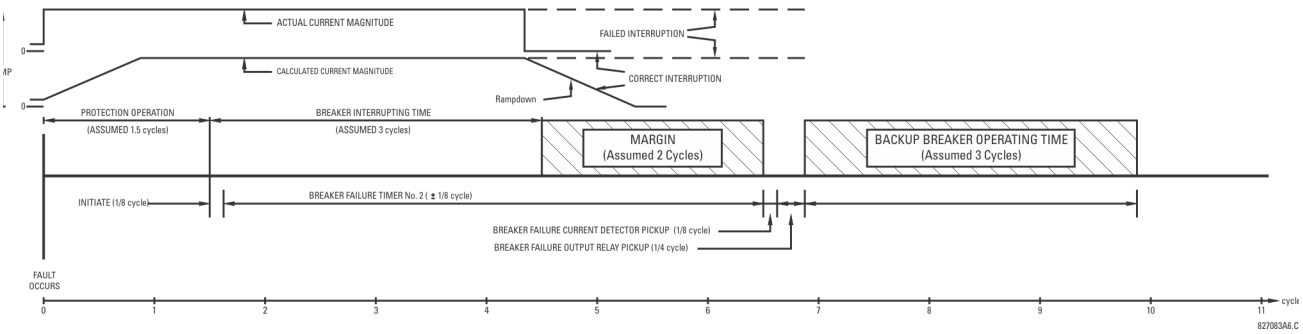

The current supervision elements reset in less than 0.7 of a power cycle for any multiple of pickup current as shown in the following figure.

Figure 5-98: Breaker failure overcurrent supervision reset time

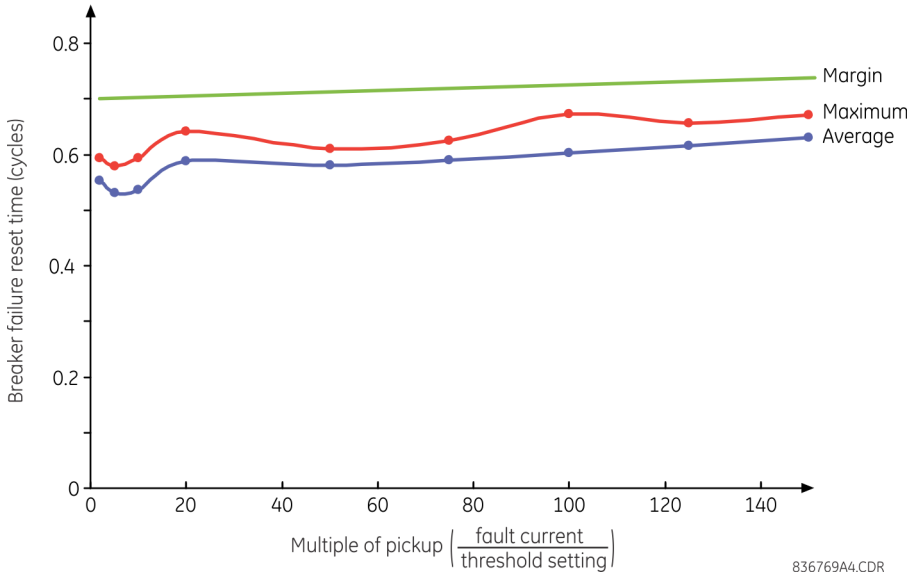

Settings

BF1 MODE — This setting is used to select the breaker failure operating mode: single or three pole.

BF1 USE AMP SUPV — If set to "Yes," the element is initiated if current flowing through the breaker is above the supervision pickup level.

BF1 USE SEAL-IN — If set to "Yes," the element is sealed-in if current flowing through the breaker is above the supervision pickup level.

BF1 3-POLE INITIATE — This setting selects the FlexLogic operand that initiates three-pole tripping of the breaker.

BF1 PH AMP SUPV PICKUP — This setting is used to set the phase current initiation and seal-in supervision level. Generally this setting detects the lowest expected fault current on the protected breaker. It can be set as low as necessary (lower than breaker resistor current or lower than load current)—high-set and low-set current supervision guarantee correct operation.

BF1 N AMP SUPV PICKUP — This setting is used to set the neutral current initiate and seal-in supervision level. Generally this setting detects the lowest expected fault current on the protected breaker. Neutral current supervision is used only in the three phase scheme to provide increased sensitivity. This setting is valid only for three-pole tripping schemes.

BF1 USE TIMER 1 — If set to "Yes," the early path is operational.

BF1 TIMER 1 PICKUP DELAY — Timer 1 is set to the shortest time required for breaker auxiliary contact Status-1 to open, from the time the initial trip signal is applied to the breaker trip circuit, plus a safety margin.

BF1 USE TIMER 2 — If set to "Yes," the main path is operational.

BF1 TIMER 2 PICKUP DELAY — Timer 2 is set to the expected opening time of the breaker, plus a safety margin. This safety margin was historically intended to allow for measuring and timing errors in the breaker failure scheme equipment. In microprocessor relays this time is not significant. In B30 relays, which use a Fourier transform, the calculated current magnitude ramps-down to zero one power frequency cycle after the current is interrupted, however this lag does not need to be included in the overall margin duration due to a novel current supervision reset element, as it occurs after current interruption. As shown in the previous figure, this current supervision reset element guarantees breaker failure reset in less than 0.7 power cycles for any subsidence current and irrespective of the magnitude of the fault current.

Note that in bulk oil circuit breakers, the interrupting time for currents less than 25% of the interrupting rating can be significantly longer than the normal interrupting time.

BF1 USE TIMER 3 — If set to "Yes," the Slow Path is operational.

BF1 TIMER 3 PICKUP DELAY — Timer 3 is set to the same interval as timer 2, plus an increased safety margin. Because this path is intended to operate only for low level faults, the delay can be in the order of 300 to 500 ms.

BF1 BKR POS1 ϕA/3P — This setting selects the FlexLogic operand that represents the protected breaker early-type auxiliary switch contact (52/a). When using the single-pole breaker failure scheme, this operand represents the protected breaker early-type auxiliary switch contact on pole A. This is normally a non-multiplied form-A contact. The contact can even be adjusted to have the shortest possible operating time.

BF1 BKR POS2 ϕA/3P — This setting selects the FlexLogic operand that represents the breaker normal-type auxiliary switch contact (52/a). When using the single-pole breaker failure scheme, this operand represents the protected breaker auxiliary switch contact on pole A. This can be a multiplied contact.

BF1 BREAKER TEST ON — This setting is used to select the FlexLogic operand that represents the breaker in-service/out-of-service switch set to the out-of-service position.

BF1 PH AMP HISET PICKUP — This setting sets the phase current output supervision level. Generally this setting is to detect the lowest expected fault current on the protected breaker, before a breaker opening resistor is inserted.

BF1 N AMP HISET PICKUP — This setting sets the neutral current output supervision level. Generally this setting is to detect the lowest expected fault current on the protected breaker, before a breaker opening resistor is inserted. Neutral current supervision is used only in the three pole scheme to provide increased sensitivity. This setting is valid only for three-pole breaker failure schemes.

BF1 PH AMP LOSET PICKUP — This setting sets the phase current output supervision level. Generally this setting is to detect the lowest expected fault current on the protected breaker, after a breaker opening resistor is inserted (approximately 90% of the resistor current).

BF1 N AMP LOSET PICKUP — This setting sets the neutral current output supervision level. Generally this setting is to detect the lowest expected fault current on the protected breaker, after a breaker opening resistor is inserted (approximately 90% of the resistor current). This setting is valid only for three-pole breaker failure schemes.

BF1 LOSET TIME DELAY — Sets the pickup delay for current detection after opening resistor insertion.

BF1 TRIP DROPOUT DELAY — This setting is used to set the period of time for which the trip output is sealed-in. This timer must be coordinated with the automatic reclosing scheme of the failed breaker, to which the breaker failure element sends a cancel reclosure signal. Reclosure of a remote breaker can also be prevented by holding a transfer trip signal on longer than the reclaim time.

BF1 PH A INITIATE / BF1 PH B INITIATE / BF 1 PH C INITIATE — These settings select the FlexLogic operand to initiate phase A, B, or C single-pole tripping of the breaker and the phase A, B, or C portion of the scheme, accordingly. This setting is only valid for single-pole breaker failure schemes.

BF1 BKR POS1 ϕB / BF1 BKR POS 1 ϕC — These settings select the FlexLogic operand to represents the protected breaker early-type auxiliary switch contact on poles B or C, accordingly. This contact is normally a non-multiplied Form-A contact. The contact can even be adjusted to have the shortest possible operating time. This setting is valid only for single-pole breaker failure schemes.

BF1 BKR POS2 ϕB — Selects the FlexLogic operand that represents the protected breaker normal-type auxiliary switch contact on pole B (52/a). This can be a multiplied contact. This setting is valid only for single-pole breaker failure schemes.

BF1 BKR POS2 ϕC — This setting selects the FlexLogic operand that represents the protected breaker normal-type auxiliary switch contact on pole C (52/a). This can be a multiplied contact. For single-pole operation, the scheme has the same overall general concept except that it provides re-tripping of each single pole of the protected breaker. The approach shown in the following single pole tripping diagram uses the initiating information to determine which pole is supposed to trip. The logic is segregated on a per-pole basis. The overcurrent detectors have ganged settings. This setting is valid only for single-pole breaker failure schemes.

Upon operation of the breaker failure element for a single pole trip command, a three-pole trip command needs to be given via output operand BKR FAIL 1 TRIP OP.

Figure 5-99: Single-pole breaker failure initiate logic

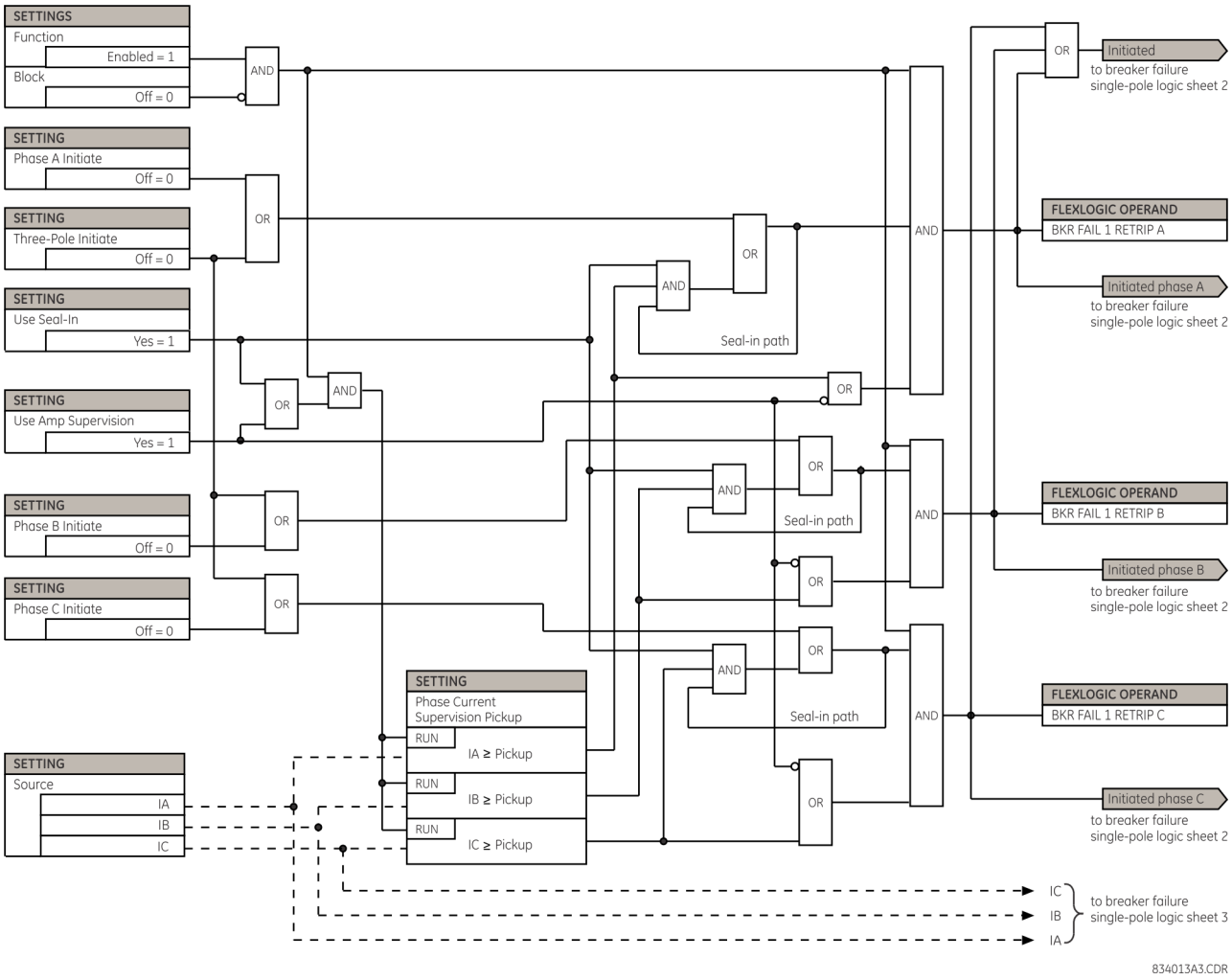

5

Figure 5-100: Single-pole breaker failure, timers logic

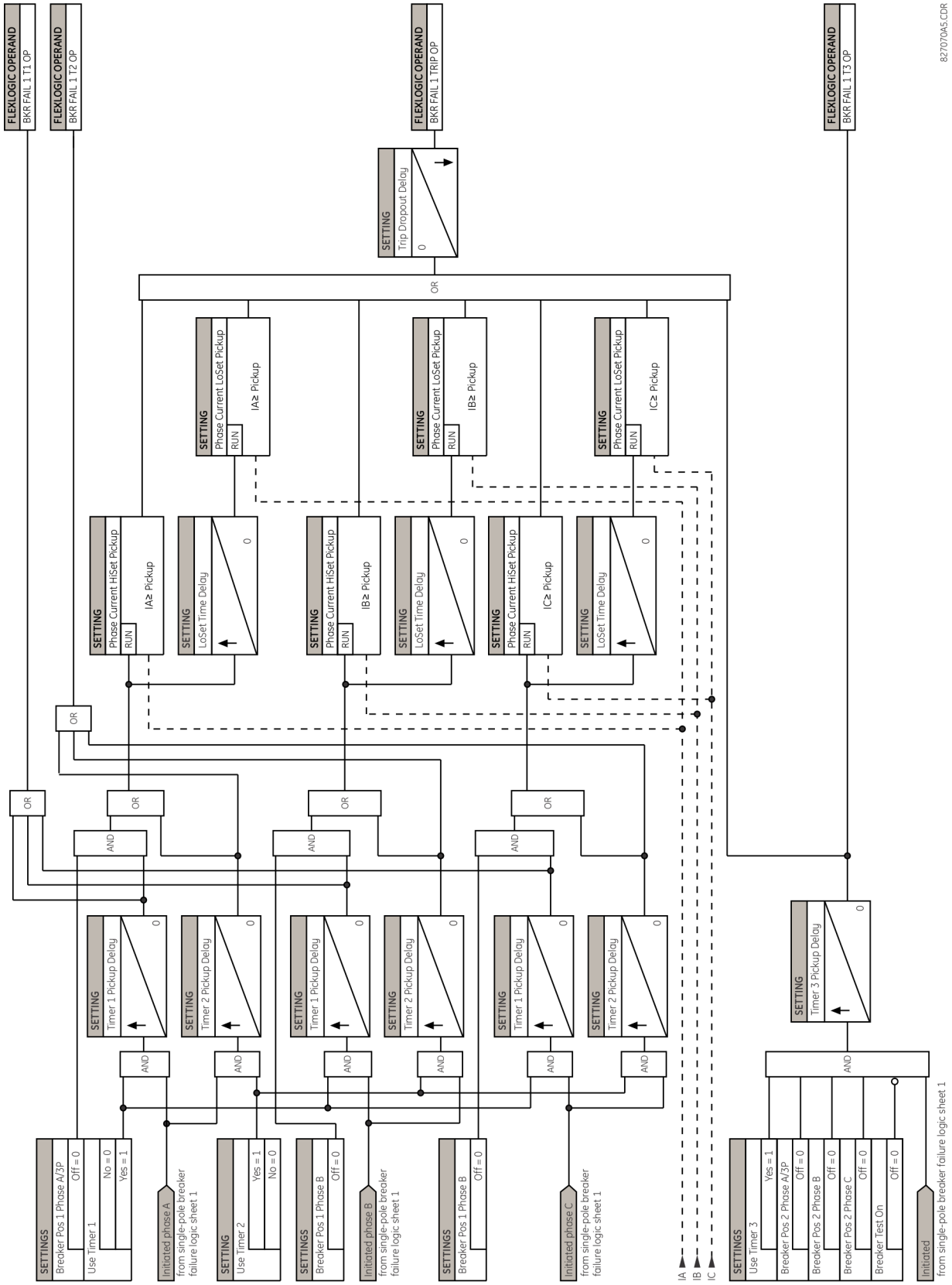

Figure 5-101: Three-pole breaker failure, initiate logic

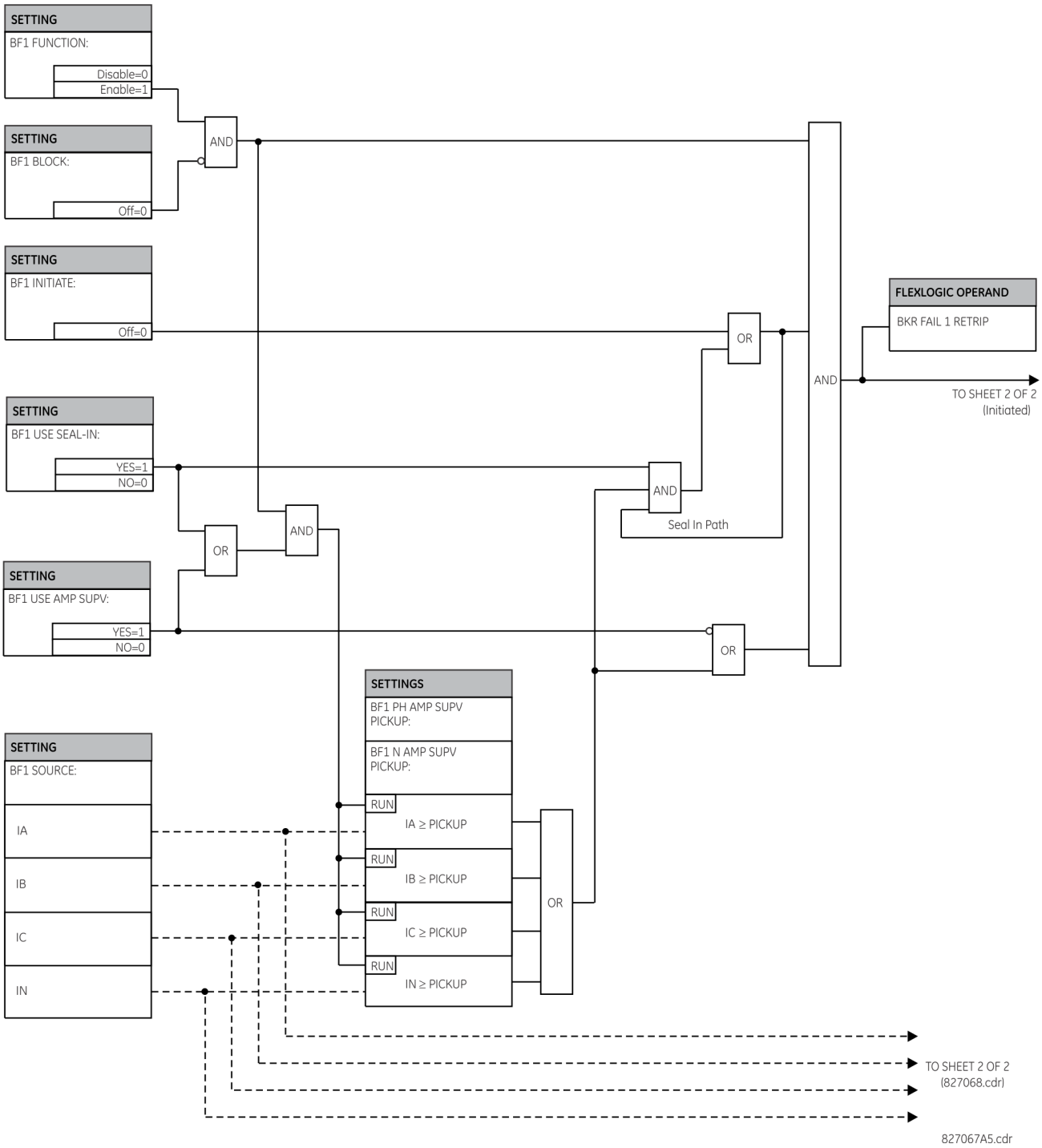

Figure 5-102: Three-pole breaker failure, timers logic

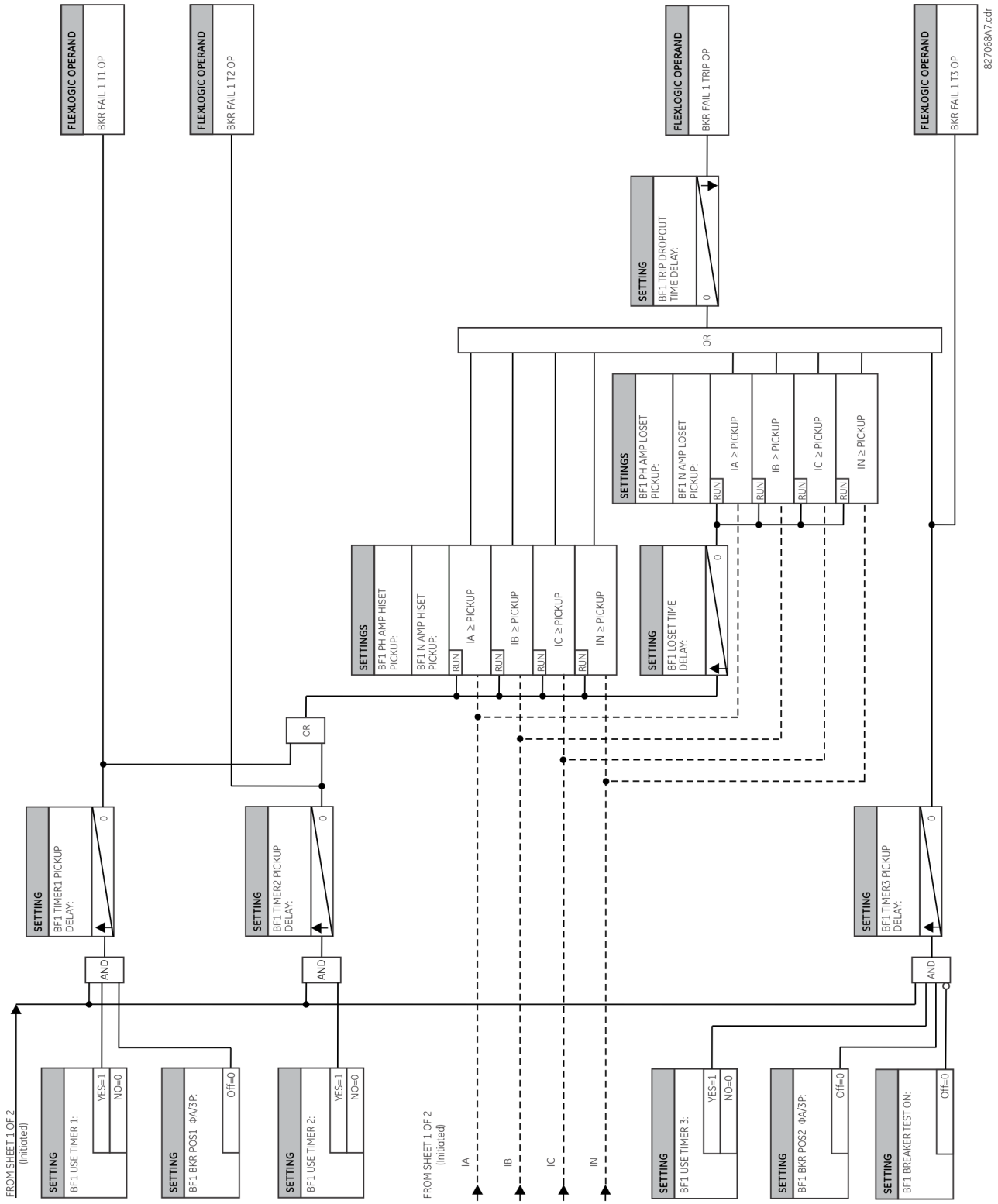

5.7.8 Voltage elements

5.7.8.1 Menu

SETTINGS ⇨⇩ GROUPED ELEMENTS ⇨ SETTING GROUP 1(6) ⇨⇩ VOLTAGE ELEMENTS

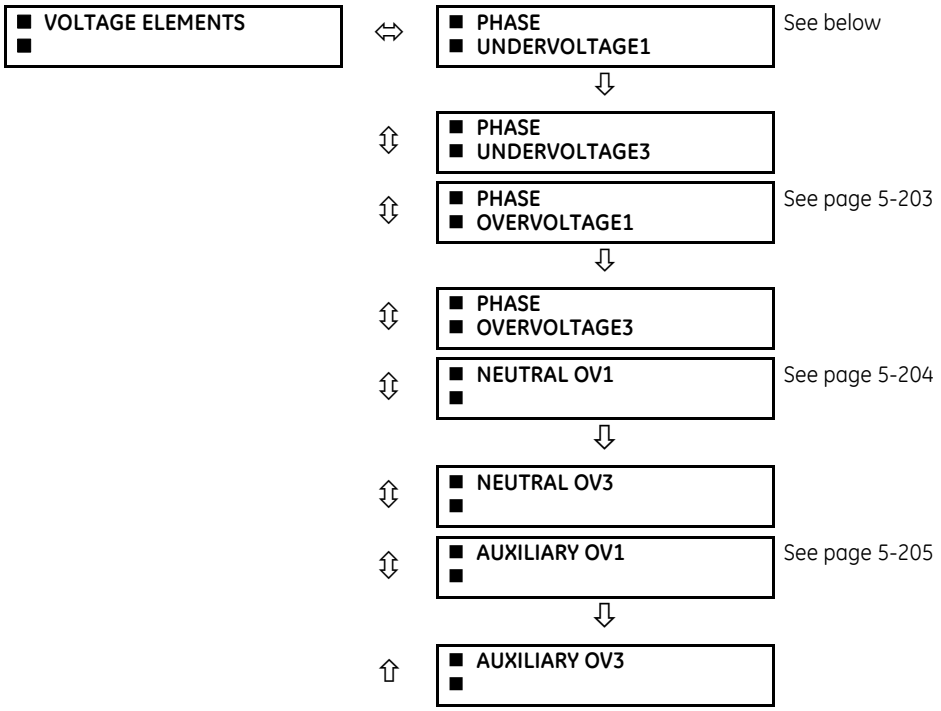

These protection elements can be used for a variety of applications, such as

- **Undervoltage protection** — For voltage sensitive loads, such as induction motors, a drop in voltage increases the drawn current, which can cause dangerous overheating in the motor. The undervoltage protection feature can be used to either cause a trip or generate an alarm when the voltage drops below a specified voltage setting for a specified time delay.
- **Permissive functions** — The undervoltage feature can be used to block the functioning of external devices by operating an output relay when the voltage falls below the specified voltage setting. The undervoltage feature can also be used to block the functioning of other elements through the block feature of those elements.
- **Source transfer schemes** — In the event of an undervoltage, a transfer signal can be generated to transfer a load from its normal source to a standby or emergency power source.

The undervoltage elements can be programmed to have a definite time delay characteristic. The definite time curve operates when the voltage drops below the pickup level for a specified period of time. The time delay is adjustable from 0 to 600.00 seconds in steps of 0.01. The undervoltage elements can also be programmed to have an inverse time delay characteristic.

The undervoltage delay setting defines the family of curves shown as follows.

$$T = \frac{D}{\left(1 - \frac{V}{V_{pickup}}\right)} \qquad \textbf{Eq. 5-14}$$

where

T = operating time
D = undervoltage delay setting (D = 0.00 operates instantaneously)
V = secondary voltage applied to the relay
V_{pickup} = pickup level

Figure 5-103: Inverse time undervoltage curves

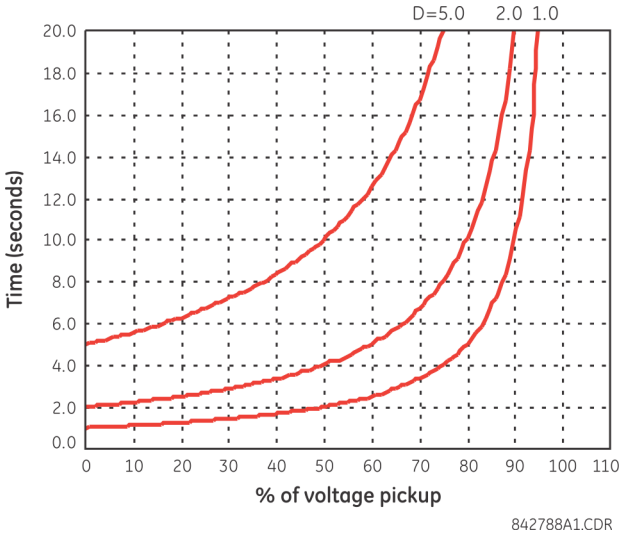

At 0% of pickup, the operating time equals the **PHASE UNDERVOLTAGE DELAY** setting.

5.7.8.2 Phase undervoltage (ANSI 27P, IEC PTUV)

SETTINGS ⇨⇩ GROUPED ELEMENTS ⇨ SETTING GROUP 1(6) ⇨⇩ VOLTAGE ELEMENTS ⇨ PHASE UNDERVOLTAGE1(3)

■ PHASE ■ UNDERVOLTAGE1	⇔	PHASE UV1 FUNCTION: Disabled	Range: Disabled, Enabled
	⇩	PHASE UV1 SIGNAL SOURCE: SRC 1	Range: SRC 1, SRC 2, SRC 3, SRC 4, SRC 5, SRC 6
	⇩	PHASE UV1 MODE: Phase to Ground	Range: Phase to Ground, Phase to Phase
	⇩	PHASE UV1 PICKUP: 1.000 pu	Range: 0.004 to 3.000 pu in steps of 0.001
	⇩	PHASE UV1 CURVE: Definite Time	Range: Definite Time, Inverse Time
	⇩	PHASE UV1 DELAY: 1.00 s	Range: 0.00 to 600.00 s in steps of 0.01
	⇩	PHASE UV1 MINIMUM VOLTAGE: 0.100 pu	Range: 0.000 to 3.000 pu in steps of 0.001
	⇩	PHASE UV1 BLOCK: Off	Range: FlexLogic operand
	⇩	PHASE UV1 TARGET: Self-reset	Range: Self-reset, Latched, Disabled
	⇧	PHASE UV1 EVENTS: Disabled	Range: Disabled, Enabled

Undervoltage elements facilitate applications including undervoltage supervision of the main bus differential protection to prevent maloperation in the event of CT trouble.

In this scheme, the normal voltage level halts the differential element. An actual bus fault operates the undervoltage element, thereby permitting the differential element to operate. This can be applied for bus configurations of up to five feeders with the voltage signal available. If applied, use the undervoltage function to supervise the main differential output with an AND gate in the FlexLogic equation before driving the output contact.

Using the drop-out undervoltage operand as the Block input to the differential element is not recommended. The differential element includes the saturation detector that responds to certain time relationships between the differential and restraining currents, and therefore, it must be operational all the time in order to function properly.

This element is used to give a time-delay operating characteristic versus the applied fundamental voltage (phase-to-ground or phase-to-phase for wye VT connection, or phase-to-phase for delta VT connection) or as a definite time element. The element resets instantaneously if the applied voltage exceeds the dropout voltage. The delay setting selects the minimum operating time of the phase undervoltage. The minimum voltage setting selects the operating voltage below which the element is blocked (a setting of "0" allows a dead source to be considered a fault condition).

Figure 5-104: Phase undervoltage1 logic

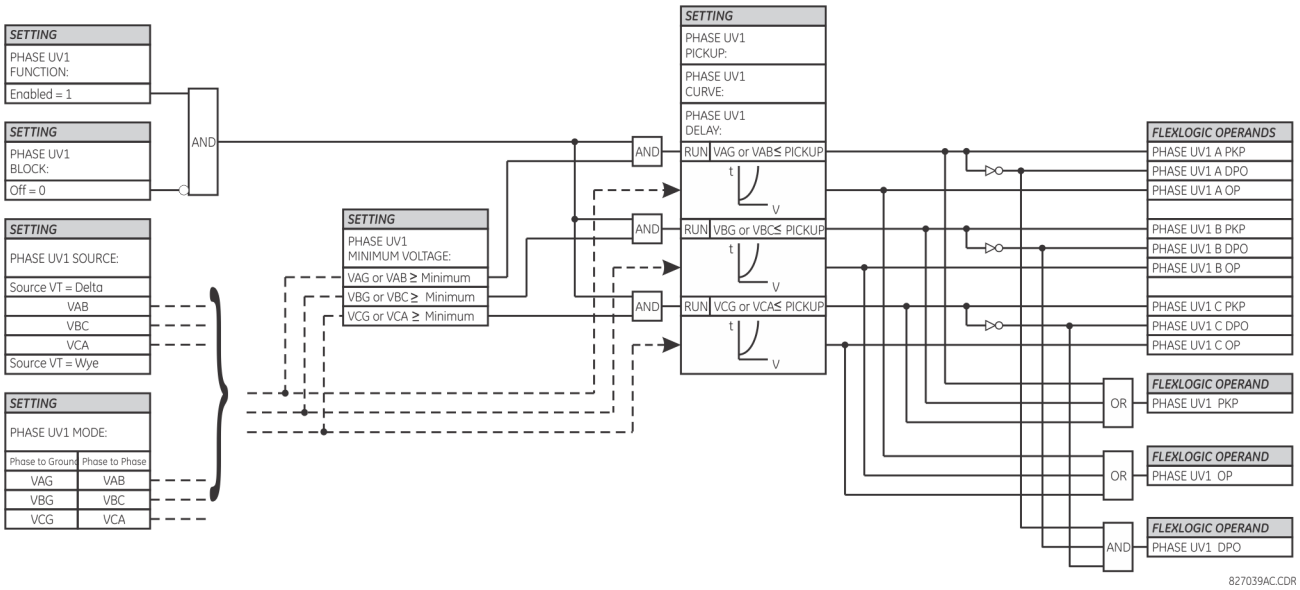

5.7.8.3 Phase overvoltage (ANSI 59P, IEC PTOV)

SETTINGS ⇨⇩ GROUPED ELEMENTS ⇨ SETTING GROUP 1(6) ⇨⇩ VOLTAGE ELEMENTS ⇨⇩ PHASE OVERVOLTAGE1(3)

■ PHASE ■ OVERVOLTAGE1	⇔	**PHASE OV1 FUNCTION: Disabled**	Range: Disabled, Enabled
	⇩	**PHASE OV1 SIGNAL SOURCE: SRC 1**	Range: SRC 1, SRC 2, SRC 3, SRC 4, SRC 5, SRC 6
	⇩	**PHASE OV1 PICKUP: 1.000 pu**	Range: 0.004 to 3.000 pu in steps of 0.001
	⇩	**PHASE OV1 PICKUP DELAY: 1.00 s**	Range: 0.00 to 600.00 s in steps of 0.01
	⇩	**PHASE OV1 RESET DELAY: 1.00 s**	Range: 0.00 to 600.00 s in steps of 0.01
	⇩	**PHASE OV1 BLOCK: Off**	Range: FlexLogic Operand
	⇩	**PHASE OV1 TARGET: Self-reset**	Range: Self-reset, Latched, Disabled
	⇧	**PHASE OV1 EVENTS: Disabled**	Range: Disabled, Enabled

There are three phase overvoltage elements available. A phase overvoltage element is used as an instantaneous element with no intentional time delay or as a definite time element. The input voltage is the phase-to-phase voltage, either measured directly from delta-connected VTs or as calculated from phase-to-ground (wye) connected VTs. The figure shows specific voltages to be used for each phase.

Figure 5-105: Phase overvoltage logic

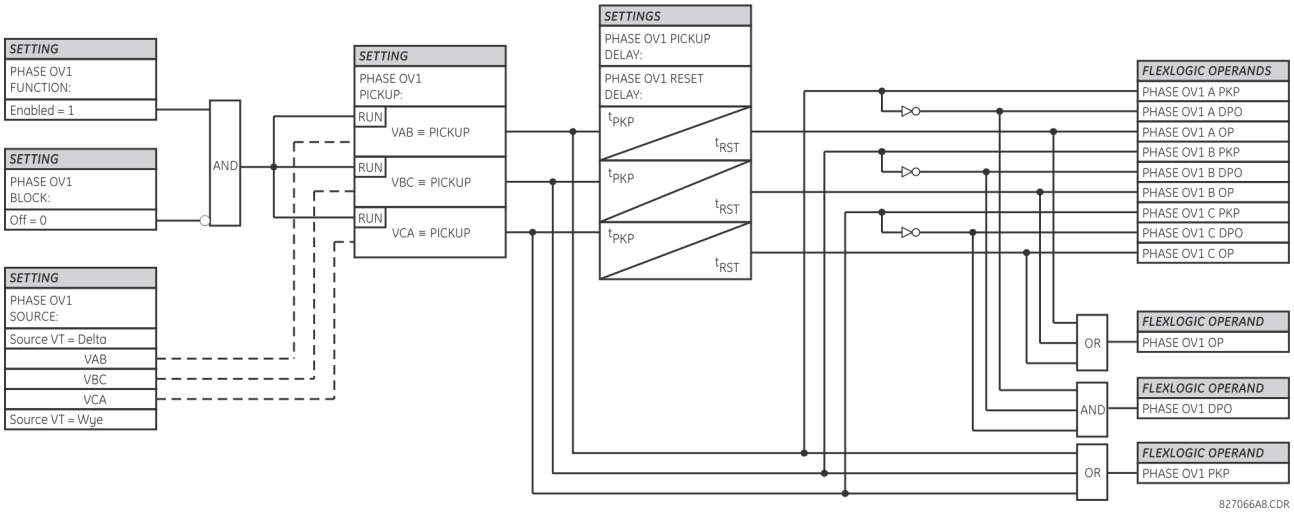

5

NOTE

If the source VT is wye-connected, then the phase overvoltage pickup condition is V > $\sqrt{3}$ x Pickup for V_{AB}, V_{BC}, and V_{CA}.

5.7.8.4 Neutral overvoltage (ANSI 59N, IEC PTOV)

SETTINGS ⇨⇩ GROUPED ELEMENTS ⇨ SETTING GROUP 1(6) ⇨⇩ VOLTAGE ELEMENTS ⇨⇩ NEUTRAL OV1(3)

■ **NEUTRAL OV1** ■	⇔	**NEUTRAL OV1 FUNCTION: Disabled**	Range: Disabled, Enabled
	⇩	**NEUTRAL OV1 SIGNAL SOURCE: SRC 1**	Range: SRC 1, SRC 2, SRC 3, SRC 4, SRC 5, SRC 6
	⇩	**NEUTRAL OV1 PICKUP: 0.300 pu**	Range: 0.004 to 3.000 pu in steps of 0.001
	⇩	**NEUTRAL OV1 CURVE: Definite Time**	Range: Definite Time, FlexCurve A, FlexCurve B, FlexCurve C
	⇩	**NEUTRAL OV1 PICKUP: DELAY: 1.00 s**	Range: 0.00 to 600.00 s in steps of 0.01
	⇩	**NEUTRAL OV1 RESET: DELAY: 1.00 s**	Range: 0.00 to 600.00 s in steps of 0.01
	⇩	**NEUTRAL OV1 BLOCK: Off**	Range: FlexLogic operand
	⇩	**NEUTRAL OV1 TARGET: Self-reset**	Range: Self-reset, Latched, Disabled
	⇧	**NEUTRAL OV1 EVENTS: Disabled**	Range: Disabled, Enabled

There are three neutral overvoltage elements available. The neutral overvoltage element can be used to detect asymmetrical system voltage condition due to a ground fault or to the loss of one or two phases of the source. The element responds to the system neutral voltage (3V_0), calculated from the phase voltages. The nominal secondary voltage of the phase voltage channels entered under **SETTINGS ⇨⇩ SYSTEM SETUP ⇨ AC INPUTS ⇨⇩ VOLTAGE BANK ⇨ PHASE VT SECONDARY** is the p.u. base used when setting the pickup level.

The neutral overvoltage element can provide a time-delayed operating characteristic versus the applied voltage (initialized from FlexCurves A, B, or C) or be used as a definite time element. The **NEUTRAL OV1 PICKUP DELAY** setting applies only if the **NEUTRAL OV1 CURVE** setting is "Definite Time." The source assigned to this element must be configured for a phase VT.

VT errors and normal voltage unbalance must be considered when setting this element. This function requires the VTs to be wye-connected.

Figure 5-106: Neutral overvoltage1 logic

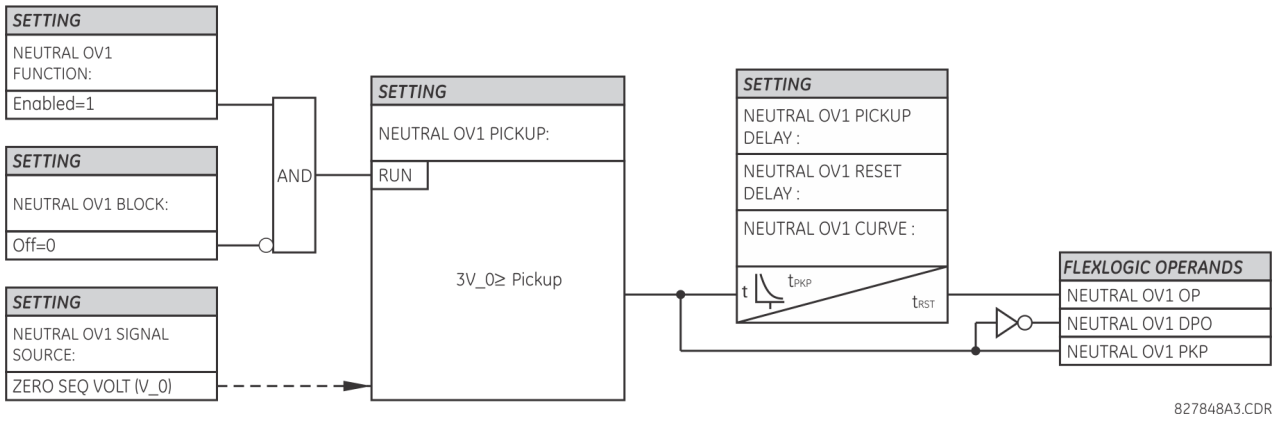

5.7.8.5 Auxiliary overvoltage (ANSI 59X, IEC PTOV)

SETTINGS ⇨⇩ GROUPED ELEMENTS ⇨ SETTING GROUP 1(6) ⇨⇩ VOLTAGE ELEMENTS ⇨⇩ AUXILIARY OV1(3)

■ **AUXILIARY OV1** ■	⇔	**AUX OV1 FUNCTION: Disabled**	Range: Disabled, Enabled
	⇩	**AUX OV1 SIGNAL SOURCE: SRC 1**	Range: SRC 1, SRC 2, SRC 3, SRC 4, SRC 5, SRC 6
	⇩	**AUX OV1 PICKUP: 0.300 pu**	Range: 0.004 to 3.000 pu in steps of 0.001
	⇩	**AUX OV1 PICKUP DELAY: 1.00 s**	Range: 0.00 to 600.00 s in steps of 0.01
	⇩	**AUX OV1 RESET DELAY: 1.00 s**	Range: 0.00 to 600.00 s in steps of 0.01
	⇩	**AUX OV1 BLOCK: Off**	Range: FlexLogic operand
	⇩	**AUX OV1 TARGET: Self-reset**	Range: Self-reset, Latched, Disabled
	⇧	**AUX OV1 EVENTS: Disabled**	Range: Disabled, Enabled

The B30 contains one auxiliary overvoltage element for each VT bank. This element is intended for monitoring overvoltage conditions of the auxiliary voltage. The nominal secondary voltage of the auxiliary voltage channel entered under **SYSTEM SETUP ⇨ AC INPUTS ⇩⇨ VOLTAGE BANK X5 ⇩⇨ AUXILIARY VT X5 SECONDARY** is the per-unit (pu) base used when setting the pickup level.

Figure 5-107: Auxiliary overvoltage logic

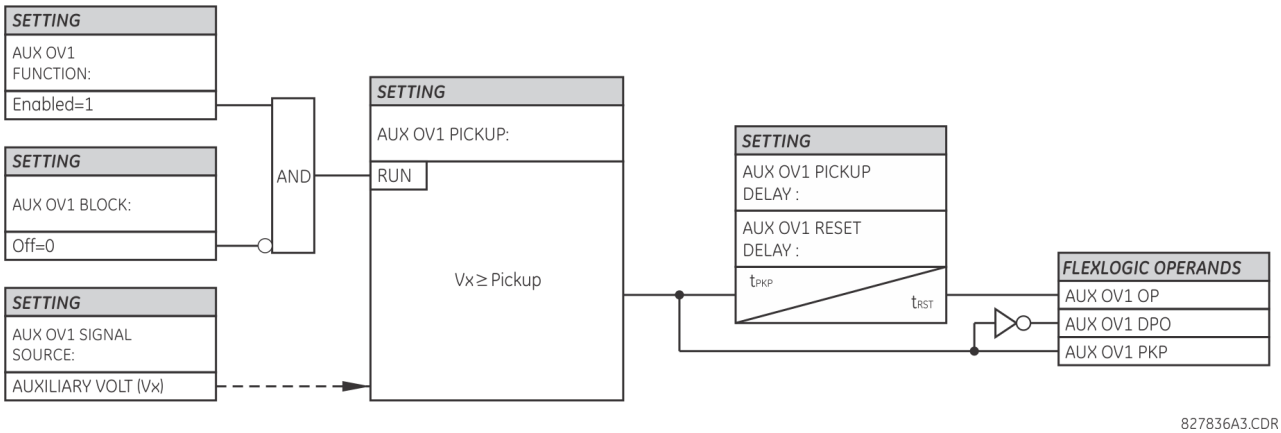

5.8 Control elements

5.8.1 Overview

Control elements are used for control rather than protection. See the Introduction to Elements section at the beginning of this chapter for information.

5

5.8.2 Trip bus

SETTINGS ⇨⇩ CONTROL ELEMENTS ⇨ TRIP BUS ⇨⇩ TRIP BUS 1(6)

■ TRIP BUS 1 ■	⇔	TRIP BUS 1 FUNCTION: Disabled	Range: Enabled, Disabled
	⇩	TRIP BUS 1 BLOCK: Off	Range: FlexLogic operand
	⇩	TRIP BUS 1 PICKUP DELAY: 0.00 s	Range: 0.00 to 600.00 s in steps of 0.01
	⇩	TRIP BUS 1 RESET DELAY: 0.00 s	Range: 0.00 to 600.00 s in steps of 0.01
	⇩	TRIP BUS 1 INPUT 1 Off	Range: FlexLogic operand
		⇩	
	⇩	TRIP BUS 1 INPUT 16 Off	Range: FlexLogic operand
	⇩	TRIP BUS 1 LATCHING: Disabled	Range: Enabled, Disabled
	⇩	TRIP BUS 1 RESET: Off	Range: FlexLogic operand
	⇩	TRIP BUS 1 TARGET: Self-reset	Range: Self-reset, Latched, Disabled
	⇧	TRIP BUS 1 EVENTS: Disabled	Range: Enabled, Disabled

The trip bus element allows aggregating outputs of protection and control elements without using FlexLogic and assigning them a simple and effective manner. Each trip bus can be assigned for either trip or alarm actions. Simple trip conditioning such as latch, delay, and seal-in delay are available.

The easiest way to assign element outputs to a trip bus is through the EnerVista software under **Settings > Protection Summary**. Navigate to a specific protection or control protection element and check the bus box by hovering over the blank check box and selecting an option that displays. Once the required element is selected for a specific bus, a list of element operate-type operands are displayed and can be assigned to a trip bus. If more than one operate-type operand is required, it can be assigned directly from the trip bus menu.

Figure 5-108: Trip bus fields in the protection summary

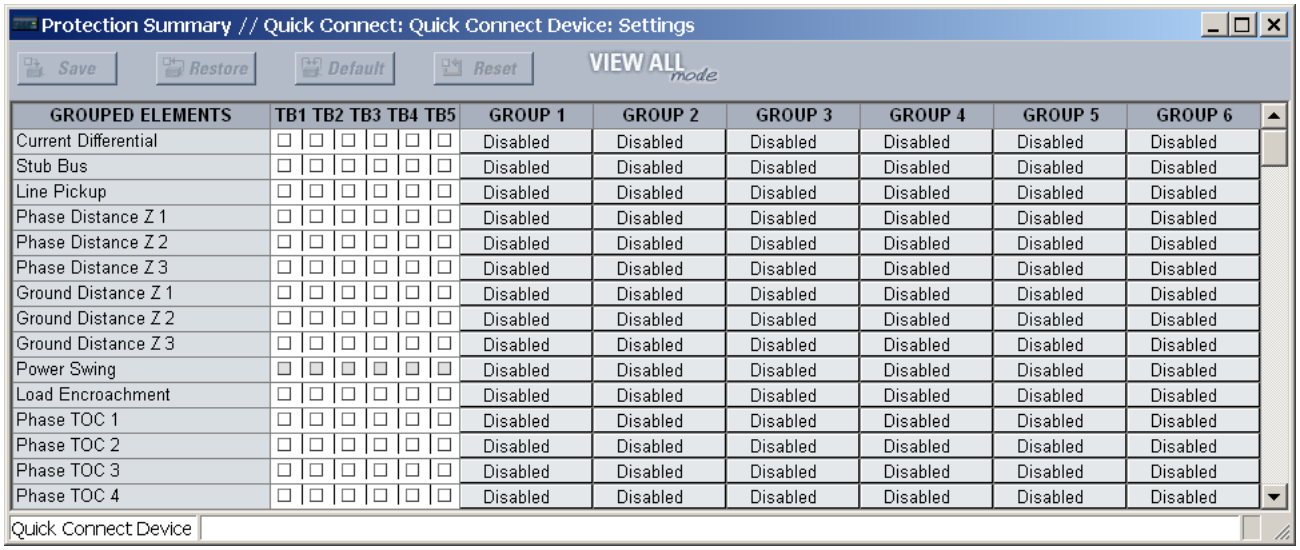

GROUPED ELEMENTS	TB1	TB2	TB3	TB4	TB5	GROUP 1	GROUP 2	GROUP 3	GROUP 4	GROUP 5	GROUP 6
Current Differential	☐	☐	☐	☐	☐	Disabled	Disabled	Disabled	Disabled	Disabled	Disabled
Stub Bus	☐	☐	☐	☐	☐	Disabled	Disabled	Disabled	Disabled	Disabled	Disabled
Line Pickup	☐	☐	☐	☐	☐	Disabled	Disabled	Disabled	Disabled	Disabled	Disabled
Phase Distance Z 1	☐	☐	☐	☐	☐	Disabled	Disabled	Disabled	Disabled	Disabled	Disabled
Phase Distance Z 2	☐	☐	☐	☐	☐	Disabled	Disabled	Disabled	Disabled	Disabled	Disabled
Phase Distance Z 3	☐	☐	☐	☐	☐	Disabled	Disabled	Disabled	Disabled	Disabled	Disabled
Ground Distance Z 1	☐	☐	☐	☐	☐	Disabled	Disabled	Disabled	Disabled	Disabled	Disabled
Ground Distance Z 2	☐	☐	☐	☐	☐	Disabled	Disabled	Disabled	Disabled	Disabled	Disabled
Ground Distance Z 3	☐	☐	☐	☐	☐	Disabled	Disabled	Disabled	Disabled	Disabled	Disabled
Power Swing	■	■	■	■	■	Disabled	Disabled	Disabled	Disabled	Disabled	Disabled
Load Encroachment	☐	☐	☐	☐	☐	Disabled	Disabled	Disabled	Disabled	Disabled	Disabled
Phase TOC 1	☐	☐	☐	☐	☐	Disabled	Disabled	Disabled	Disabled	Disabled	Disabled
Phase TOC 2	☐	☐	☐	☐	☐	Disabled	Disabled	Disabled	Disabled	Disabled	Disabled
Phase TOC 3	☐	☐	☐	☐	☐	Disabled	Disabled	Disabled	Disabled	Disabled	Disabled
Phase TOC 4	☐	☐	☐	☐	☐	Disabled	Disabled	Disabled	Disabled	Disabled	Disabled

The following settings are available.

TRIP BUS 1 BLOCK — The trip bus output is blocked when the operand assigned to this setting is asserted.

TRIP BUS 1 PICKUP DELAY — This setting specifies a time delay to produce an output depending on how output is used.

TRIP BUS 1 RESET DELAY — This setting specifies a time delay to reset an output command. Set the time delay long enough to allow the breaker or contactor to perform a required action.

TRIP BUS 1 INPUT 1 to **TRIP BUS 1 INPUT 16** — These settings select a FlexLogic operand to be assigned as an input to the trip bus.

TRIP BUS 1 LATCHING — This setting enables or disables latching of the trip bus output. This is typically used when lockout is required or user acknowledgement of the relay response is required.

TRIP BUS 1 RESET — The trip bus output is reset when the operand assigned to this setting is asserted. Note that the RESET OP operand is pre-wired to the reset gate of the latch, As such, a reset command from the front panel interface or via communications resets the trip bus output.

Figure 5-109: Trip bus logic

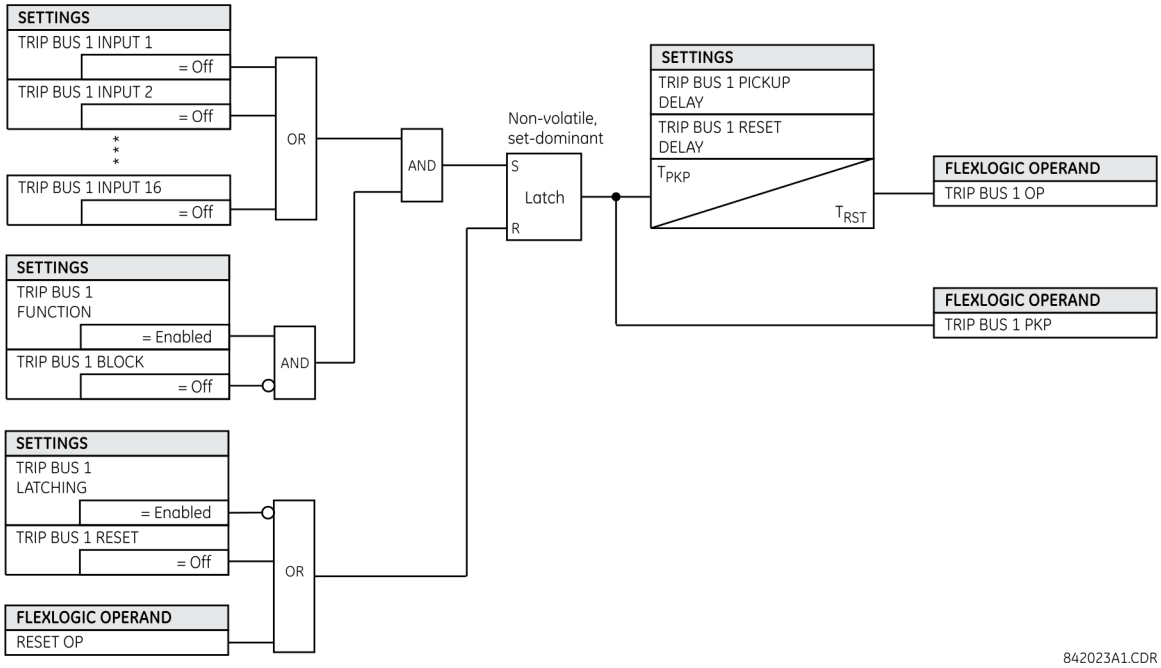

5

5.8.3 Setting groups

SETTINGS ⇨⇩ CONTROL ELEMENTS ⇨ SETTING GROUPS

■ **SETTING GROUPS** ■	⇔	**SETTING GROUPS FUNCTION: Enabled**	Range: Disabled, Enabled
	⇩	**SETTING GROUPS BLK: Off**	Range: FlexLogic operand
	⇩	**GROUP 2 ACTIVATE ON: Off**	Range: FlexLogic operand
	⇩	**GROUP 6 ACTIVATE ON: Off**	Range: FlexLogic operand
	⇩	**GROUP 1 NAME:**	Range: up to 16 alphanumeric characters
	⇩	**GROUP 6 NAME:**	Range: up to 16 alphanumeric characters
	⇩	**SETTING GROUP EVENTS: Disabled**	Range: Disabled, Enabled

The setting groups menu controls the activation and deactivation of up to six possible groups of settings in the **GROUPED ELEMENTS** settings menu. The active setting group can be indicated on the front display of the UR by configuring User-Programmable LEDs to display the state of the SETTING GROUP ACT FlexLogic operands.

On a setting group change, protection elements are blocked temporarily to allow the relay to re-initialize with the new settings. The duration of the block depends on relay configuration and can last up to four cycles. The actual block duration on the group switching can be verified by the PROTSUPV operand.

SETTING GROUPS FUNCTION — When Enabled, allows setting groups other than group 1 (the default active group) to be activated. The default setting group is forced active while the **SETTING GROUPS FUNCTION** setting is Disabled.

SETTING GROUPS BLK — Prevents the active setting group from changing when the selected FlexLogic operand is "On." This can be useful in applications where it is undesirable to change the settings under certain conditions, such as during a control sequence.

GROUP 2 ACTIVATE ON to **GROUP 6 ACTIVATE ON** — Selects a FlexLogic operand which, when set, makes the particular setting group active for use by any grouped element. A priority scheme ensures that only one group is active at a given time — the highest-numbered group that is activated by its **ACTIVATE ON** parameter takes priority over the lower-numbered groups. There is no activate on setting for group 1 (the default active group), because group 1 automatically becomes active if no other group is active.

SETTING GROUP 1 NAME to **SETTING GROUP 6 NAME** — Allows the user to assign a name to each of the six settings groups. Once programmed, this name appears on the second line of the **GROUPED ELEMENTS ⇨ SETTING GROUP 1(6)** menu display.

The relay can be set up via a FlexLogic equation to receive requests to activate or de-activate a particular non-default settings group. The following FlexLogic equation (see the following figure) illustrates requests via remote communications (for example, VIRTUAL INPUT 1 ON) or from a local contact input (for example, CONTACT IP 1 ON) to initiate the use of a particular settings group, and requests from several overcurrent pickup measuring elements to inhibit the use of the particular settings group. The assigned VIRTUAL OUTPUT 1 operand is used to control the "On" state of a particular settings group.

Figure 5-110: Example of FlexLogic control of a setting group

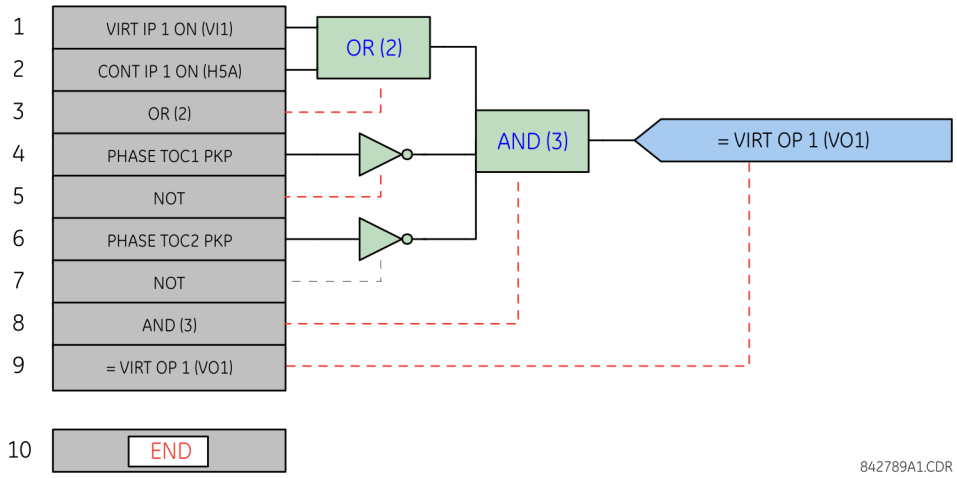

A setting group selection can also be made by the IEC 61850 MMS service SelectActiveSG to the control block @Master/LLN0.SGCB. The priority scheme mentioned makes active the highest numbered group selected by SelectActiveSG or the **GROUP ACTIVATE ON** settings. The SelectActiveSG selection has a default value of 1, so until a higher SelectActiveSG selection is received, the **GROUP ACTIVATE ON** settings control the active group.

The most recent SelectActiveSG selection is preserved while the UR is powered down or reset.

If it becomes necessary to cancel the SelectActiveSG selection without using a SelectActiveSG service request, change the **SETTING GROUPS FUNCTION** setting to Disabled. This resets the SelectActiveSG selection to 1.

5.8.4 Selector switch

SETTINGS ⇨⇩ CONTROL ELEMENTS ⇨ SELECTOR SWITCH ⇨ SELECTOR SWITCH 1(2)

■ **SELECTOR SWITCH 1** ■	⇔	**SELECTOR 1 FUNCTION:** **Disabled**	Range: Disabled, Enabled
	⇩	**SELECTOR 1 FULL** **RANGE: 7**	Range: 1 to 7 in steps of 1
	⇩	**SELECTOR 1 TIME-OUT:** **5.0 s**	Range: 3.0 to 60.0 s in steps of 0.1

⇕	**SELECTOR 1 STEP-UP: Off**	Range: FlexLogic operand
⇕	**SELECTOR 1 STEP-UP MODE: Time-out**	Range: Time-out, Acknowledge
⇕	**SELECTOR 1 ACK: Off**	Range: FlexLogic operand
⇕	**SELECTOR 1 3BIT A0: Off**	Range: FlexLogic operand
⇕	**SELECTOR 1 3BIT A1: Off**	Range: FlexLogic operand
⇕	**SELECTOR 1 3BIT A2: Off**	Range: FlexLogic operand
⇕	**SELECTOR 1 3BIT MODE: Time-out**	Range: Time-out, Acknowledge
⇕	**SELECTOR 1 3BIT ACK: Off**	Range: FlexLogic operand
⇕	**SELECTOR 1 POWER-UP MODE: Restore**	Range: Restore, Synchronize, Sync/Restore
⇕	**SELECTOR 1 TARGETS: Self-reset**	Range: Self-reset, Latched, Disabled
⇧	**SELECTOR 1 EVENTS: Disabled**	Range: Disabled, Enabled

The selector switch element is intended to replace a mechanical selector switch. Typical applications include setting group control or control of multiple logic sub-circuits in user-programmable logic.

The element provides for two control inputs. The step-up control allows stepping through selector position one step at a time with each pulse of the control input, such as a user-programmable pushbutton. The three-bit control input allows setting the selector to the position defined by a three-bit word.

The element allows pre-selecting a new position without applying it. The pre-selected position gets applied either after time-out or upon acknowledgement via separate inputs (user setting). The selector position is stored in non-volatile memory. Upon power-up, either the previous position is restored or the relay synchronizes to the current three-bit word (user setting). Basic alarm functionality alerts the user under abnormal conditions; for example, the three-bit control input being out of range.

A selector switch runs every two power cycles.

SELECTOR 1 FULL RANGE — This setting defines the upper position of the selector. When stepping up through available positions of the selector, the upper position wraps up to the lower position (position 1). When using a direct three-bit control word for programming the selector to a desired position, the change would take place only if the control word is within the range of 1 to the **SELECTOR FULL RANGE**. If the control word is outside the range, an alarm is established by setting the SELECTOR ALARM FlexLogic operand for three seconds.

SELECTOR 1 TIME-OUT — This setting defines the time-out period for the selector. This value is used by the relay in the following two ways. When the **SELECTOR STEP-UP MODE** is "Time-out," the setting specifies the required period of inactivity of the control input after which the pre-selected position is automatically applied. When the **SELECTOR STEP-UP MODE** is "Acknowledge," the setting specifies the period of time for the acknowledging input to appear. The timer is re-started by any activity of the control input. The acknowledging input must come before the **SELECTOR 1 TIME-OUT** timer expires; otherwise, the change does not take place and an alarm is set.

SELECTOR 1 STEP-UP — This setting specifies a control input for the selector switch. The switch is shifted to a new position at each rising edge of this signal. The position changes incrementally, wrapping up from the last (**SELECTOR 1 FULL RANGE**) to the first (position 1). Consecutive pulses of this control operand must not occur faster than every 50 ms. After each rising edge of the assigned operand, the time-out timer is restarted and the SELECTOR SWITCH 1: POS Z CHNG INITIATED target message is displayed, where Z the pre-selected position. The message is displayed for the time specified by the **FLASH MESSAGE TIME** setting. The pre-selected position is applied after the selector times out ("Time-out" mode), or when the

acknowledging signal appears before the element times out ("Acknowledge" mode). When the new position is applied, the relay displays the SELECTOR SWITCH 1: POSITION Z IN USE message. Typically, a user-programmable pushbutton is configured as the stepping up control input.

SELECTOR 1 STEP-UP MODE — This setting defines the selector mode of operation. When set to "Time-out," the selector changes its position after a pre-defined period of inactivity at the control input. The change is automatic and does not require any explicit confirmation of the intent to change the selector's position. When set to "Acknowledge," the selector changes its position only after the intent is confirmed through a separate acknowledging signal. If the acknowledging signal does not appear within a pre-defined period of time, the selector does not accept the change and an alarm is established by setting the SELECTOR STP ALARM output FlexLogic operand for three seconds.

SELECTOR 1 ACK — This setting specifies an acknowledging input for the stepping up control input. The pre-selected position is applied on the rising edge of the assigned operand. This setting is active only under "Acknowledge" mode of operation. The acknowledging signal must appear within the time defined by the **SELECTOR 1 TIME-OUT** setting after the last activity of the control input. A user-programmable pushbutton is typically configured as the acknowledging input.

SELECTOR 1 3BIT A0, **A1**, and **A2** — These settings specify a three-bit control input of the selector. The three-bit control word pre-selects the position using the following encoding convention:

A2	A1	A0	Position
0	0	0	rest
0	0	1	1
0	1	0	2
0	1	1	3
1	0	0	4
1	0	1	5
1	1	0	6
1	1	1	7

The "rest" position (0, 0, 0) does not generate an action and is intended for situations when the device generating the three-bit control word is having a problem. When **SELECTOR 1 3BIT MODE** is "Time-out," the pre-selected position is applied in **SELECTOR 1 TIME-OUT** seconds after the last activity of the three-bit input. When **SELECTOR 1 3BIT MODE** is "Acknowledge," the pre-selected position is applied on the rising edge of the **SELECTOR 1 3BIT ACK** acknowledging input.

The stepping up control input (**SELECTOR 1 STEP-UP**) and the three-bit control inputs (**SELECTOR 1 3BIT A0** through **A2**) lock-out mutually: once the stepping up sequence is initiated, the three-bit control input is inactive; once the three-bit control sequence is initiated, the stepping up input is inactive.

SELECTOR 1 3BIT MODE — This setting defines the selector mode of operation. When set to "Time-out," the selector changes its position after a pre-defined period of inactivity at the control input. The change is automatic and does not require explicit confirmation to change the selector position. When set to "Acknowledge," the selector changes its position only after confirmation via a separate acknowledging signal. If the acknowledging signal does not appear within a pre-defined period of time, the selector rejects the change and an alarm established by invoking the SELECTOR BIT ALARM FlexLogic operand for three seconds.

SELECTOR 1 3BIT ACK — This setting specifies an acknowledging input for the three-bit control input. The pre-selected position is applied on the rising edge of the assigned FlexLogic operand. This setting is active only under the "Acknowledge" mode of operation. The acknowledging signal must appear within the time defined by the **SELECTOR TIME-OUT** setting after the last activity of the three-bit control inputs. Note that the stepping up control input and three-bit control input have independent acknowledging signals (**SELECTOR 1 ACK** and **SELECTOR 1 3BIT ACK**, accordingly).

SELECTOR 1 POWER-UP MODE — This setting specifies the element behavior on power up of the relay.

When set to "Restore," the last position of the selector (stored in the non-volatile memory) is restored after powering up the relay. If the position restored from memory is out of range, position 0 (no output operand selected) is applied and an alarm is set (**SELECTOR 1 PWR ALARM**).

When set to "Synchronize," the selector switch acts as follows. For two power cycles, the selector applies position 0 to the switch and activates **SELECTOR 1 PWR ALARM**. After two power cycles expire, the selector synchronizes to the position dictated by the three-bit control input. This operation does not wait for time-out or the acknowledging input. When the synchronization attempt is unsuccessful (that is, the three-bit input is not available (0,0,0) or out of range), then the selector switch output is set to position 0 (no output operand selected) and an alarm is established (**SELECTOR 1 PWR ALARM**).

The operation of "Synch/Restore" mode is similar to the "Synchronize" mode. The only difference is that after an unsuccessful synchronization attempt, the switch attempts to restore the position stored in the relay memory. The "Synch/Restore" mode is useful for applications where the selector switch is employed to change the setting group in redundant (two relay) protection schemes.

SELECTOR 1 EVENTS — If enabled, the following events are logged:

Event name	Description
SELECTOR 1 POS Z	Selector 1 changed its position to Z
SELECTOR 1 STP ALARM	The selector position pre-selected via the stepping up control input has not been confirmed before the time out
SELECTOR 1 BIT ALARM	The selector position pre-selected via the three-bit control input has not been confirmed before the time out

The following figures illustrate the operation of the selector switch. In these diagrams, "T" represents a time-out setting.

Figure 5-111: Time-out mode

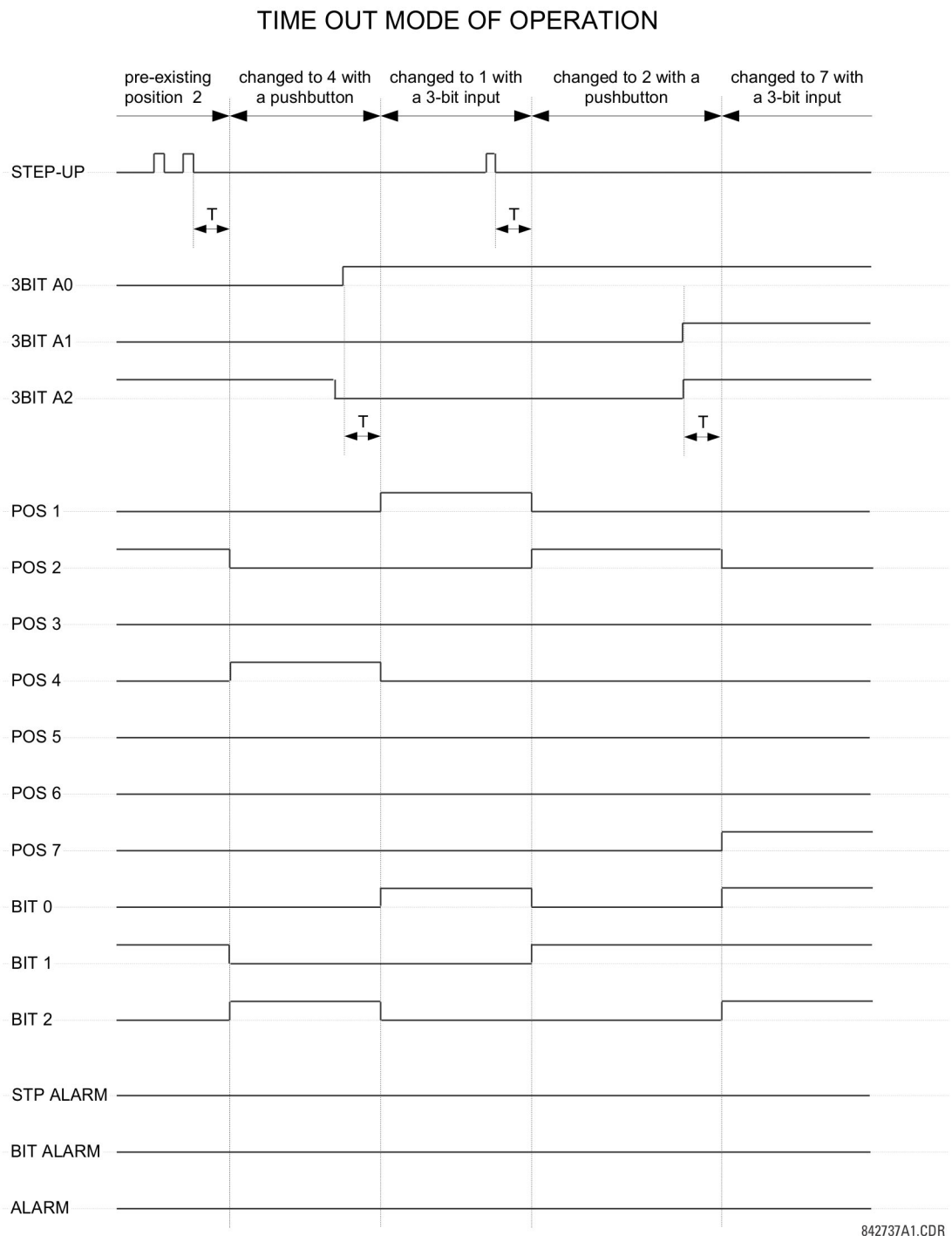

Figure 5-112: Acknowledge mode

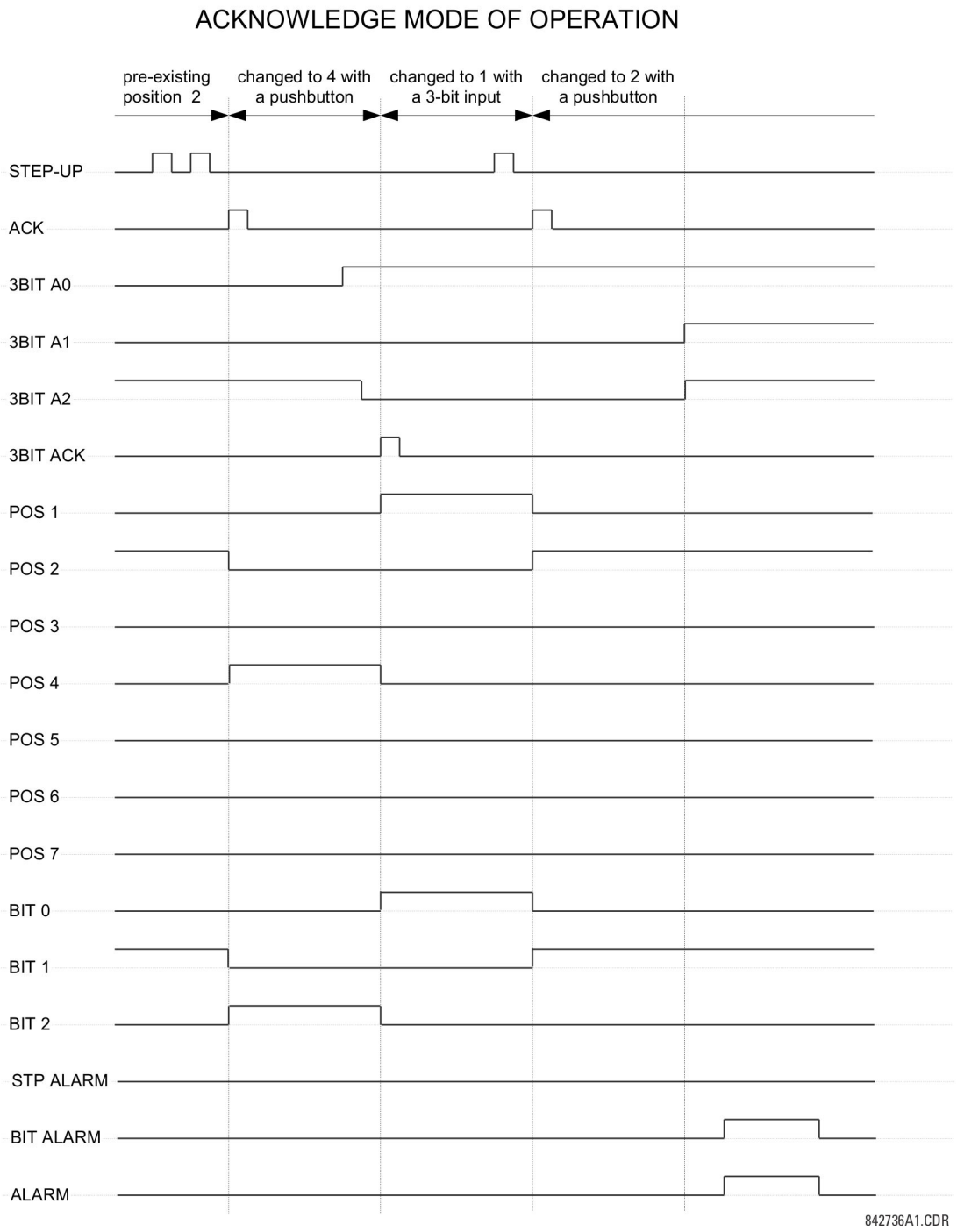

Application example

Consider an application where the selector switch is used to control setting groups 1 through 4 in the relay. The setting groups are to be controlled from both user-programmable pushbutton 1 and from an external device via contact inputs 1 through 3. The active setting group is to be available as an encoded three-bit word to the external device and SCADA via output contacts 1 through 3. The pre-selected setting group is to be applied automatically after five seconds of inactivity of the control inputs. When the relay powers up, it is to synchronize the setting group to the three-bit control input.

Make the following changes to setting group control in the **SETTINGS ⇨⇩ CONTROL ELEMENTS ⇨ SETTING GROUPS** menu:

SETTING GROUPS FUNCTION: "Enabled"
SETTING GROUPS BLK: "Off"
GROUP 2 ACTIVATE ON: "SELECTOR 1 POS 2"
GROUP 3 ACTIVATE ON: "SELECTOR 1 POS 3"
GROUP 4 ACTIVATE ON: "SELECTOR 1 POS 4"
GROUP 5 ACTIVATE ON: "Off"
GROUP 6 ACTIVATE ON: "Off"

Make the following changes to selector switch element in the **SETTINGS ⇨⇩ CONTROL ELEMENTS ⇨⇩ SELECTOR SWITCH ⇨ SELECTOR SWITCH 1** menu to assign control to user programmable pushbutton 1 and contact inputs 1 through 3:

SELECTOR 1 FUNCTION: "Enabled"
SELECTOR 1 FULL-RANGE: "4"
SELECTOR 1 STEP-UP MODE: "Time-out"
SELECTOR 1 TIME-OUT: "5.0 s"
SELECTOR 1 STEP-UP: "PUSHBUTTON 1 ON"
SELECTOR 1 ACK: "Off"
SELECTOR 1 3BIT A0: "CONT IP 1 ON"
SELECTOR 1 3BIT A1: "CONT IP 2 ON"
SELECTOR 1 3BIT A2: "CONT IP 3 ON"
SELECTOR 1 3BIT MODE: "Time-out"
SELECTOR 1 3BIT ACK: "Off"
SELECTOR 1 POWER-UP MODE: "Synchronize"

Now, assign the contact output operation (assume the H6E module) to the selector switch element by making the following changes in the **SETTINGS ⇨⇩ INPUTS/OUTPUTS ⇨⇩ CONTACT OUTPUTS** menu:

OUTPUT H1 OPERATE: "SELECTOR 1 BIT 0"
OUTPUT H2 OPERATE: "SELECTOR 1 BIT 1"
OUTPUT H3 OPERATE: "SELECTOR 1 BIT 2"

Finally, assign configure user-programmable pushbutton 1 by making the following changes in the **SETTINGS ⇨ PRODUCT SETUP ⇨⇩ USER-PROGRAMMABLE PUSHBUTTONS ⇨ USER PUSHBUTTON 1** menu:

PUSHBUTTON 1 FUNCTION: "Self-reset"
PUSHBUTTON 1 DROP-OUT TIME: "0.10 s"

The figure shows the logic for the selector switch.

Figure 5-113: Selector switch logic

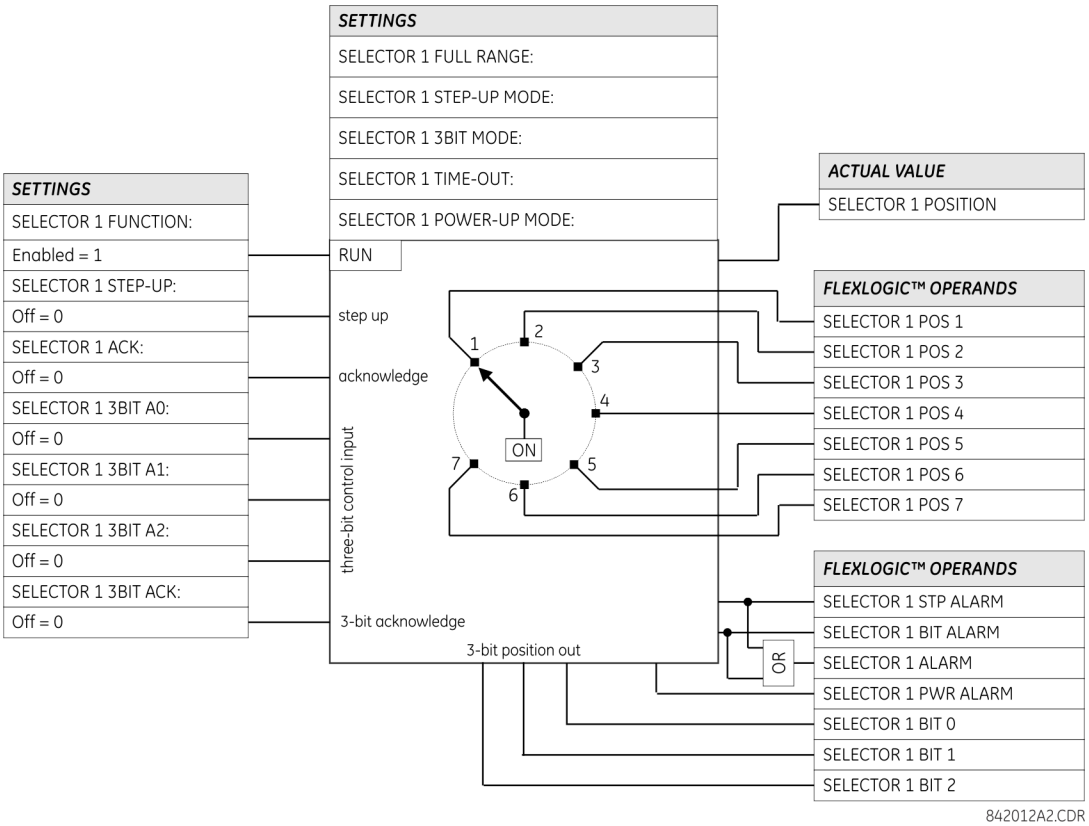

5.8.5 Digital elements

SETTINGS ⇨⇩ CONTROL ELEMENTS ⇨⇩ DIGITAL ELEMENTS ⇨ DIGITAL ELEMENT 1(48)

■ DIGITAL ELEMENT 1 ■	⇔	DIGITAL ELEMENT 1 FUNCTION: Disabled	Range: Disabled, Enabled
	⇩	DIG ELEM 1 NAME: Dig Element 1	Range: up to 16 alphanumeric characters
	⇩	DIG ELEM 1 INPUT: Off	Range: FlexLogic operand
	⇩	DIG ELEM 1 PICKUP DELAY: 0.000 s	Range: 0.000 to 999999.999 s in steps of 0.001
	⇩	DIG ELEM 1 RESET DELAY: 0.000 s	Range: 0.000 to 999999.999 s in steps of 0.001
	⇩	DIGITAL ELEMENT 1 PICKUP LED: Enabled	Range: Disabled, Enabled
	⇩	DIG ELEM 1 BLOCK: Off	Range: FlexLogic operand
	⇩	DIGITAL ELEMENT 1 TARGET: Self-reset	Range: Self-reset, Latched, Disabled
	⇧	DIGITAL ELEMENT 1 EVENTS: Disabled	Range: Disabled, Enabled

NOTE

Digital elements run once per power system cycle.

As such they can easily fail to react to an input signal or a block signal with a duration less than one power system cycle. This also means that digital element output can react up to one power system cycle later than the pickup and reset delay settings indicate.

Do not use digital elements with transient signals, such as communications commands. Do not use digital elements where random delays of up to one cycle cannot be tolerated, such as in high speed protection.

There are 48 identical digital elements available, numbered 1 to 48. A digital element can monitor any FlexLogic operand and present a target message and/or enable events recording depending on the output operand state. The digital element settings include a name to be referenced in any target message, a blocking input from any selected FlexLogic operand, and a timer for pickup and reset delays for the output operand.

DIGITAL ELEMENT 1 INPUT — Selects a FlexLogic operand to be monitored by the digital element.

DIGITAL ELEMENT 1 PICKUP DELAY — Sets the required time delay from element pickup to element operation. If a pickup delay is not required, set to "0," To avoid nuisance alarms, set the delay greater than the operating time of the breaker.

DIGITAL ELEMENT 1 RESET DELAY — Sets the time delay to reset. If a reset delay is not required, set to "0."

DIGITAL ELEMENT 1 PICKUP LED — This setting enables or disabled the digital element pickup LED. When set to "Disabled," the operation of the pickup LED is blocked.

Figure 5-114: Digital element logic

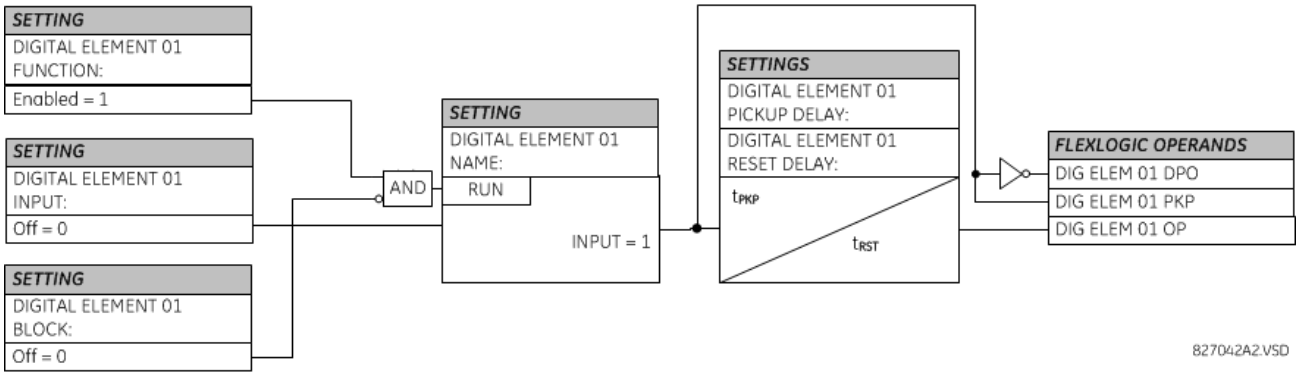

Circuit monitoring applications

Some versions of the digital input modules include an active voltage monitor circuit connected across form-A contacts. The voltage monitor circuit limits the trickle current through the output circuit (see technical specifications for form-A).

As long as the current through the voltage monitor is above a threshold (see technical specifications for form-A), the Cont Op 1 VOn FlexLogic operand is set (for contact input 1—corresponding operands exist for each contact output). If the output circuit has a high resistance or the DC current is interrupted, the trickle current drops below the threshold and the Cont Op 1 VOff FlexLogic operand is set. Consequently, the state of these operands can be used as indicators of the integrity of the circuits in which form-A contacts are inserted.

Example 1: Breaker trip circuit integrity monitoring

In many applications it is desired to monitor the breaker trip circuit integrity so that problems can be detected before a trip operation is required. The circuit is considered to be healthy when the voltage monitor connected across the trip output contact detects a low level of current, well below the operating current of the breaker trip coil. If the circuit presents a high resistance, the trickle current falls below the monitor threshold, and an alarm is declared.

In most breaker control circuits, the trip coil is connected in series with a breaker auxiliary contact that is open when the breaker is open (see figure). To prevent unwanted alarms in this situation, the trip circuit monitoring logic must include the breaker position.

Figure 5-115: Trip circuit example 1

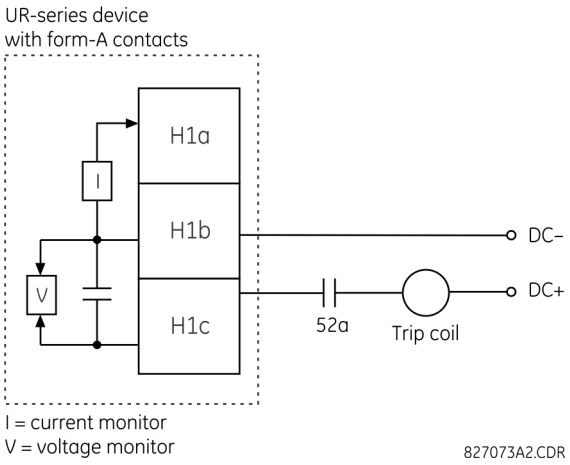

Assume the output contact H1 is a trip contact. Using the contact output settings, this output is given an ID name; for example, "Cont Op 1." Assume a 52a breaker auxiliary contact is connected to contact input H5a to monitor breaker status. Using the contact input settings, this input is given an ID name, for example, "Cont Ip 1," and is set "On" when the breaker is closed. The settings to use digital element 1 to monitor the breaker trip circuit are indicated (EnerVista example shown).

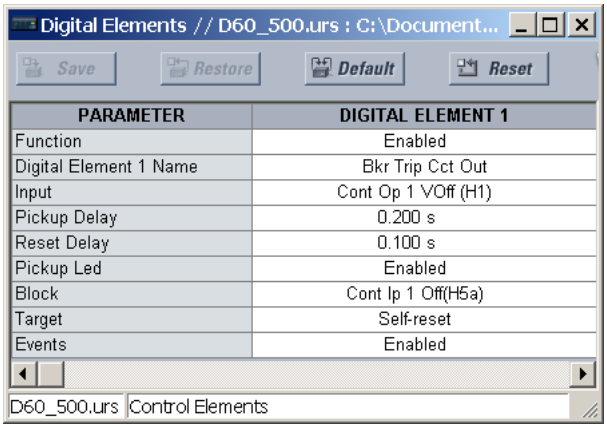

PARAMETER	DIGITAL ELEMENT 1
Function	Enabled
Digital Element 1 Name	Bkr Trip Cct Out
Input	Cont Op 1 VOff (H1)
Pickup Delay	0.200 s
Reset Delay	0.100 s
Pickup Led	Enabled
Block	Cont Ip 1 Off(H5a)
Target	Self-reset
Events	Enabled

Example 2: Breaker trip circuit integrity monitoring

If it is required to monitor the trip circuit continuously, independent of the breaker position (open or closed), a method to maintain the monitoring current flow through the trip circuit when the breaker is open must be provided (as shown in the following figure). This can be achieved by connecting a suitable resistor (see figure) across the auxiliary contact in the trip circuit. In this case, it is not required to supervise the monitoring circuit with the breaker position – the **BLOCK** setting is selected to "Off." In this case, the settings are as follows (EnerVista example shown).

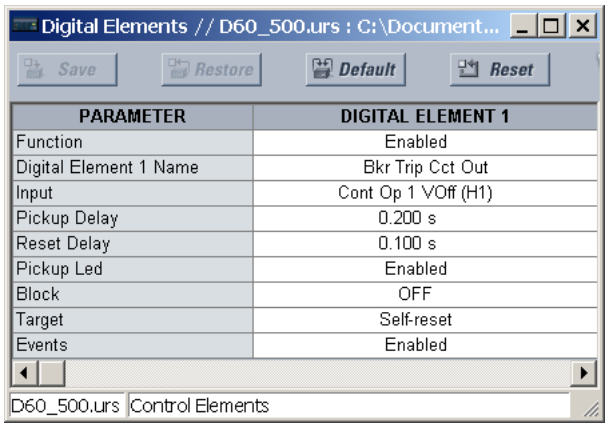

PARAMETER	DIGITAL ELEMENT 1
Function	Enabled
Digital Element 1 Name	Bkr Trip Cct Out
Input	Cont Op 1 VOff (H1)
Pickup Delay	0.200 s
Reset Delay	0.100 s
Pickup Led	Enabled
Block	OFF
Target	Self-reset
Events	Enabled

Figure 5-116: Trip circuit example 2

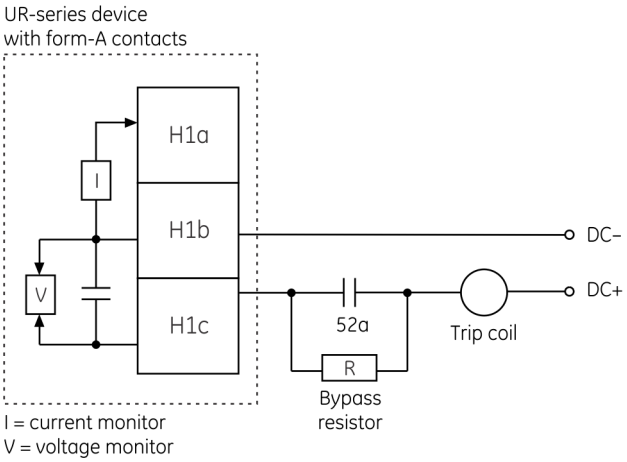

Values for resistor "R"

Power supply	Resistance	Power
24 V DC	1000 O	2 W
30 V DC	5000 O	2 W
48 V DC	10000 O	2 W
110 V DC	25000 O	5 W
125 V DC	25000 O	5 W
250 V DC	50000 O	5 W

827074A3.CDR

NOTE

The wiring connection for two examples above is applicable to both form-A contacts with voltage monitoring and solid-state contact with voltage monitoring.

5.8.6 Digital counters

SETTINGS ⇨⇩ CONTROL ELEMENTS ⇨⇩ DIGITAL COUNTERS ⇨⇩ COUNTER 1(8)

■ **COUNTER 1** ■	⇔	**COUNTER 1** **FUNCTION: Disabled**	Range: Disabled, Enabled
	⇩	**COUNTER 1 NAME:** **Counter 1**	Range: up to 12 alphanumeric characters
	⇩	**COUNTER 1 UNITS:**	Range: up to six alphanumeric characters

⇕	**COUNTER 1 PRESET:** **0**	Range: –2,147,483,648 to +2,147,483,647
⇕	**COUNTER 1 COMPARE:** **0**	Range: –2,147,483,648 to +2,147,483,647
⇕	**COUNTER 1 UP:** **Off**	Range: FlexLogic operand
⇕	**COUNTER 1 DOWN:** **Off**	Range: FlexLogic operand
⇕	**COUNTER 1 BLOCK:** **Off**	Range: FlexLogic operand
⇕	**CNT1 SET TO PRESET:** **Off**	Range: FlexLogic operand
⇕	**COUNTER 1 RESET:** **Off**	Range: FlexLogic operand
⇕	**COUNT1 FREEZE/RESET:** **Off**	Range: FlexLogic operand
⇧	**COUNT1 FREEZE/COUNT:** **Off**	Range: FlexLogic operand

There are eight identical digital counters, numbered from 1 to 8. A digital counter counts the number of state transitions from Logic 0 to Logic 1. The counter is used to count operations such as the pickups of an element, the changes of state of an external contact (for example, breaker auxiliary switch), or pulses from a watt-hour meter.

COUNTER 1 UNITS — Assigns a label to identify the unit of measure pertaining to the digital transitions to be counted. The units label appears in the corresponding actual values status.

COUNTER 1 PRESET — Sets the count to a required preset value before counting operations begin, as in the case where a substitute relay is to be installed in place of an in-service relay, or while the counter is running.

COUNTER 1 COMPARE — Sets the value to which the accumulated count value is compared. Three FlexLogic output operands are provided to indicate if the present value is 'more than (HI)', 'equal to (EQL)', or 'less than (LO)' the set value.

COUNTER 1 UP — Selects the FlexLogic operand for incrementing the counter. If an enabled UP input is received when the accumulated value is at the limit of +2,147,483,647 counts, the counter rolls over to –2,147,483,648.

COUNTER 1 DOWN — Selects the FlexLogic operand for decrementing the counter. If an enabled DOWN input is received when the accumulated value is at the limit of –2,147,483,648 counts, the counter rolls over to +2,147,483,647.

COUNTER 1 BLOCK — Selects the FlexLogic operand for blocking the counting operation. All counter operands are blocked.

CNT1 SET TO PRESET — Selects the FlexLogic operand used to set the count to the preset value. The counter sets to the preset value in the following situations:

- When the counter is enabled and the **CNT1 SET TO PRESET** operand has the value 1 (when the counter is enabled and **CNT1 SET TO PRESET** operand is 0, the counter sets to 0)
- When the counter is running and the **CNT1 SET TO PRESET** operand changes the state from 0 to 1 (**CNT1 SET TO PRESET** changing from 1 to 0 while the counter is running has no effect on the count)
- When a reset or reset/freeze command is sent to the counter and the **CNT1 SET TO PRESET** operand has the value 1 (when a reset or reset/freeze command is sent to the counter and the **CNT1 SET TO PRESET** operand has the value 0, the counter sets to 0)

COUNTER 1 RESET — Selects the FlexLogic operand for setting the count to either "0" or the preset value depending on the state of the **CNT1 SET TO PRESET** operand.

COUNTER 1 FREEZE/RESET — Selects the FlexLogic operand for capturing (freezing) the accumulated count value into a separate register with the date and time of the operation, and resetting the count to "0."

COUNTER 1 FREEZE/COUNT — Selects the FlexLogic operand for capturing (freezing) the accumulated count value into a separate register with the date and time of the operation, and continuing counting. The present accumulated value and captured frozen value with the associated date/time stamp are available as actual values. If control power is interrupted, the accumulated and frozen values are saved into non-volatile memory during the power-down operation.

Figure 5-117: Digital counter logic

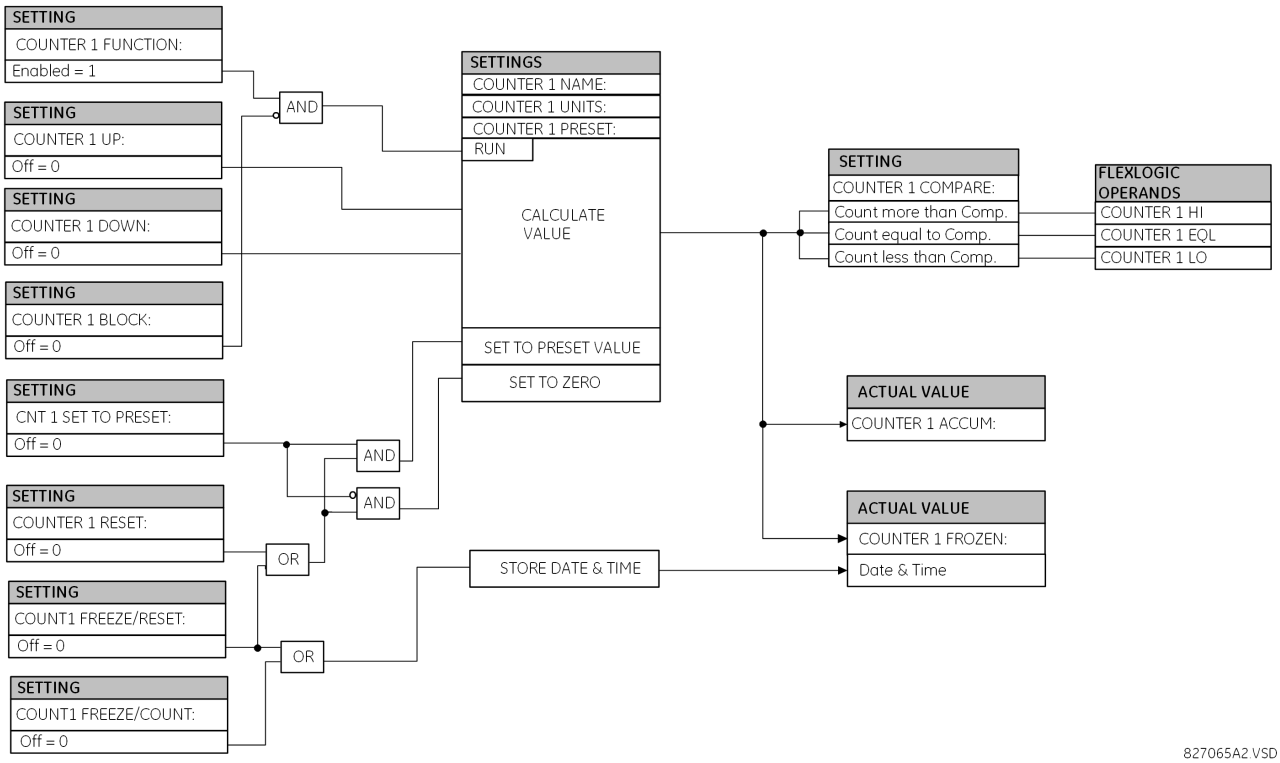

5.8.7 Monitoring elements

5.8.7.1 Menu

SETTINGS ⇨⇩ CONTROL ELEMENTS ⇨⇩ MONITORING ELEMENTS

■ MONITORING ■ ELEMENTS	⇔	■ BREAKER 1 ■ ARCING CURRENT	See below
		⇩	
	⇕	■ BREAKER 6 ■ ARCING CURRENT	
	⇕	■ BREAKER ■ FLASHOVER 1	See page 5-225
	⇕	■ BREAKER ■ FLASHOVER 2	
	⇕	■ BREAKER RESTRIKE 1 ■	See page 5-230
		⇩	
	⇕	■ BREAKER RESTRIKE 6 ■	
	⇕	■ CT TROUBLE ZONE 1 ■	See page 5-232
	⇕	■ CT TROUBLE ZONE 2 ■	

⇧	■ THERMAL OVERLOAD ■ PROTECTION	See page 5-233

5.8.7.2 Breaker arcing current

SETTINGS ⇨⇩ CONTROL ELEMENTS ⇨⇩ MONITORING ELEMENTS ⇨ BREAKER 1(6) ARCING CURRENT

■ BREAKER 1 ■ ARCING CURRENT	⇔	BKR 1 ARC AMP FUNCTION: Disabled	Range: Disabled, Enabled
	⇕	BKR 1 ARC AMP SOURCE: SRC 1	Range: SRC 1, SRC 2, SRC 3, SRC 4, SRC 5, SRC 6
	⇕	BKR 1 ARC AMP INT-A: Off	Range: FlexLogic operand
		⇩	
	⇕	BKR 1 ARC AMP INT-C: Off	Range: FlexLogic operand
	⇕	BKR 1 ARC AMP DELAY: 0.000 s	Range: 0.000 to 65.535 s in steps of 0.001
	⇕	BKR 1 ARC AMP LIMIT: 1000 kA2-cyc	Range: 0 to 50000 kA^2-cycle in steps of 1
	⇕	BKR 1 INTERRUPTION RATING: 31.5 kA	Range: 0.0 to 100.0 kA in steps of 0.1
	⇕	BKR 1 CLR ARC AMPS: Off	Range: FlexLogic operand
	⇕	BKR 1 ARC AMP BLOCK: Off	Range: FlexLogic operand
	⇕	BKR 1 ARC AMP TARGET: Self-reset	Range: Self-reset, Latched, Disabled
	⇧	BKR 1 ARC AMP EVENTS: Disabled	Range: Disabled, Enabled

There is one breaker arcing current element available per CT bank, with a minimum of two elements. This element calculates an estimate of the per-phase wear on the breaker contacts by measuring and integrating the current squared passing through the breaker contacts as an arc. These per-phase values are added to accumulated totals for each phase and compared to a programmed threshold value. When the threshold is exceeded in any phase, the relay can set an output operand to "1." The accumulated value for each phase can be displayed as an actual value.

The operation of the scheme is shown in the following logic diagram. The same output operand that is selected to operate the output relay used to trip the breaker, indicating a tripping sequence has begun, is used to initiate this feature. A time delay is introduced between initiation and the starting of integration to prevent integration of current flow through the breaker before the contacts have parted. This interval includes the operating time of the output relay, any other auxiliary relays, and the breaker mechanism. For maximum measurement accuracy, measure the interval between change-of-state of the operand (from 0 to 1) and contact separation for the specific installation. Integration of the measured current continues for 100 ms, which is expected to include the total arcing period.

The feature is programmed to perform fault duration calculations. Fault duration is defined as a time between operation of the disturbance detector occurring before initiation of this feature, and reset of an internal low-set overcurrent function. Correction is implemented to account for a non-zero reset time of the overcurrent function.

Breaker arcing currents and fault duration values are available under the **ACTUAL VALUES ⇨⇩ RECORDS ⇨⇩ MAINTENANCE ⇨ BREAKER 1(6)** menus.

BKR 1 ARC AMP INT-A(C) — Select the same output operands that are configured to operate the output relays used to trip the breaker. In three-pole tripping applications, configure the same operand to initiate arcing current calculations for poles A, B, and C of the breaker. In single-pole tripping applications, configure per-pole tripping operands to initiate the calculations for the poles that are actually tripped.

BKR 1 ARC AMP DELAY — This setting is used to program the delay interval between the time the tripping sequence is initiated and the time the breaker contacts are expected to part, starting the integration of the measured current.

BKR 1 ARC AMP LIMIT — Selects the threshold value above which the output operand is set.

BKR 1 CLR ARC AMPS — Selects a FlexLogic Operand to clear the accumulated I^2t values (kA^2-cycle), reset fault duration items (breaker operating time), clear ARCING AMPS (kA^2-cycle) and AMP MAX (kA) values of the last event.

BKR 1 INTERUPTION RATING — This setting specifies the maximum symmetrical interruption rating of the circuit breaker.

Figure 5-118: Arcing current measurement

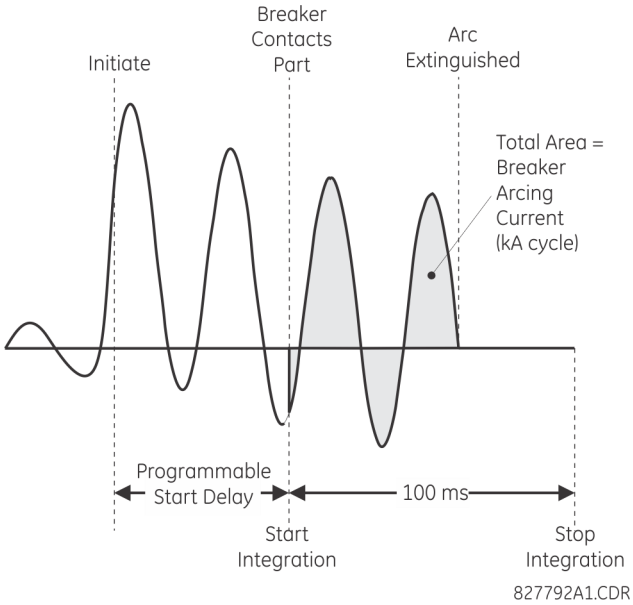

Figure 5-119: Breaker arcing current logic

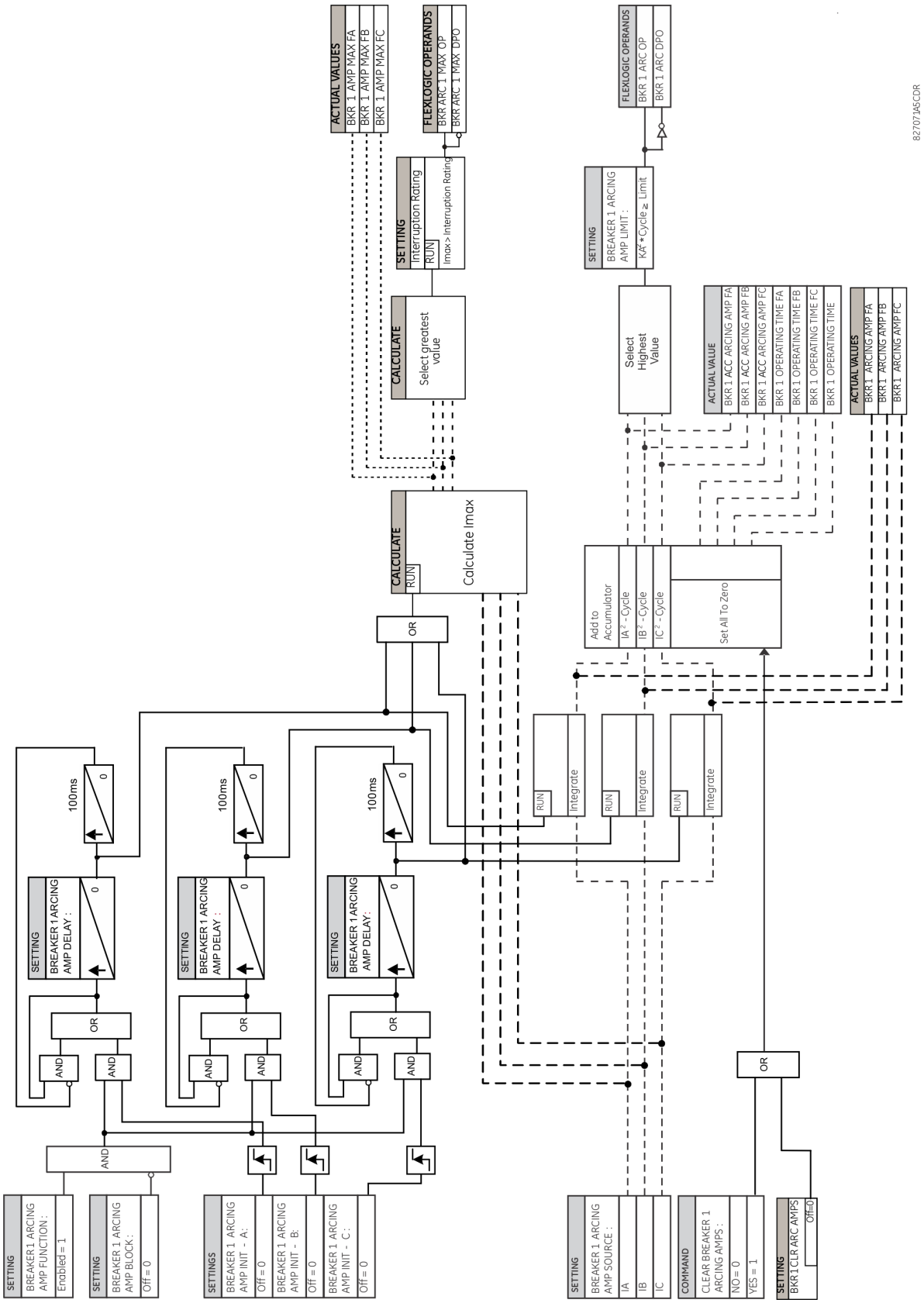

5.8.7.3 Breaker flashover

SETTINGS ⇨⇩ CONTROL ELEMENTS ⇨⇩ MONITORING ELEMENTS ⇨⇩ BREAKER FLASHOVER 1(2)

■ BREAKER ■ FLASHOVER 1	⇔	**BRK 1 FLSHOVR FUNCTION: Disabled**	Range: Disabled, Enabled
	⇩	**BRK 1 FLSHOVR SIDE 1 SRC: SRC 1**	Range: SRC 1, SRC 2, SRC 3, SRC 4, SRC 5, SRC 6
	⇩	**BRK 1 FLSHOVR SIDE 2 SRC: None**	Range: None, SRC 1, SRC 2, SRC 3, SRC 4, SRC 5, SRC 6
	⇩	**BRK 1 STATUS CLSD A: Off**	Range: FlexLogic operand
		⇩	
	⇩	**BRK 1 STATUS CLSD C: Off**	Range: FlexLogic operand
	⇩	**BRK 1 FLSHOVR V PKP: 0.850 pu**	Range: 0.004 to 1.500 pu in steps of 0.001
	⇩	**BRK 1 FLSHOVR DIFF V PKP: 1000 V**	Range: 0 to 100000 V in steps of 1
	⇩	**BRK 1 FLSHOVR AMP PKP: 0.600 pu**	Range: 0.020 to 1.500 pu in steps of 0.001
	⇩	**BRK 1 FLSHOVR PKP DELAY: 0.100 s**	Range: 0.000 to 65.535 s in steps of 0.001
	⇩	**BRK 1 FLSHOVR SPV A: Off**	Range: FlexLogic operand
		⇩	
	⇩	**BRK 1 FLSHOVR SPV C: Off**	Range: FlexLogic operand
	⇩	**BRK 1 FLSHOVR BLOCK: Off**	Range: FlexLogic operand
	⇩	**BRK 1 FLSHOVR TARGET: Self-reset**	Range: Self-reset, Latched, Disabled
	⇧	**BRK 1 FLSHOVR EVENTS: Disabled**	Range: Disabled, Enabled

The detection of the breaker flashover is based on the following conditions:

- Breaker open,
- When phase voltage measured from either side of the breaker is greater than the setting,
- Measured current through the breaker is greater than the pickup setting, and
- Voltage difference across the breaker drops below the pickup setting (only applicable to six VTs application)

Furthermore, the scheme is applicable for cases where one or two sets of three-phase voltages are available across the breaker, as follows:

- One set of three-phase voltages is available across the breaker (three VTs application)
- Two sets of three-phase voltages are available across the breaker (six VTs application)

Three VT breaker flashover application

When only one set of VTs is available across the breaker, set the **BRK 1 FLSHOVR SIDE 2 SRC** setting to “None.”

NOTE

Voltages must be present prior to flashover conditions. If the three VTs are placed after the breaker on the line (or feeder), and the downstream breaker is open, the measured voltage is zero and the flashover element is not initiated.

The flashover detection resets if the current drops below **BRK 1 FLSHOVR AMP PKP**, the breaker closes, or the FlexLogic operand selected by **BRK 1 FLSHOVR SPV A** changes to high. It is recommended to use the supervision **BRK 1 FLSHOVR SPV A** setting, and select a trip operand that does not allow the flashover element to pick up prior to the trip.

The flashover detection can be used for external alarm, re-tripping the breaker, or energizing the lockout relay.

Consider the following configuration:

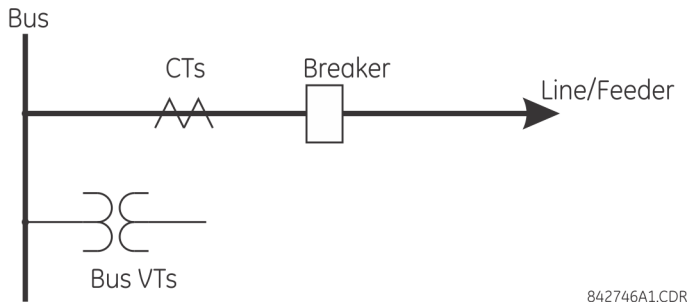

The source 1 (SRC1) phase currents are feeder CTs and phase voltages are bus VTs, and Contact Input 1 is set as Breaker 52a contact. The conditions prior to flashover detection are:

- 52a status = 0
- VAg is greater than the **BRK 1 FLSHOVR V PKP** setting
- IA is below **BRK 1 FLSHOVR AMP PKP** (ideally, IA = 0)

The conditions at flashover detection are:

- 52a status = 0
- VAg is greater or lesser than the **BRK 1 FLSHOVR V PKP** setting
- IA is greater than the **BRK 1 FLSHOVR AMP PKP** setting

Six VT breaker flashover application

In a six-VT application, the VTs located on both sides of a breaker are available. When the breaker is open, the voltage difference across the breaker is the rated voltage if the line is not energized from the remote end, or it can be two times the rated voltage at the time of synchronization if the line is energized from the remote. At the occurrence of breaker flashover, the voltage difference across breaker drops and current greater than **BRK 1 FLSHOVR AMP PKP** starts flowing through the breaker. These conditions are also true for a normal closed operation of a breaker where the voltage difference across breaker is practically zero and load current flows through the breaker. To distinguish between breaker flashover and normal closed operation of breaker, the Breaker Status is utilized.

In a six-VT configuration, if the voltages from VTs located on one of the sides of breaker disappear due to VT fuse failure or other reason, a three-VT configuration can provide the breaker flashover detection. If however, the blocking of breaker flashover detection is wanted under voltage loss on one side condition, then it can be done by applying the appropriate FlexLogic operand to the **BRK FLSHOVR BLOCK** setting.

Consider the following configuration:

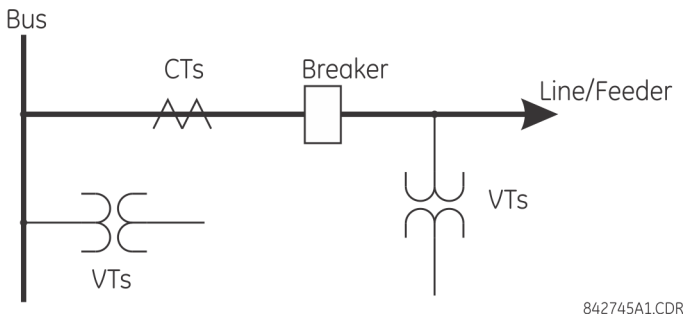

The source 1 (SRC1) phase currents are CTs and phase voltages are bus VTs. The source 2 (SRC2) phase voltages are line VTs. Contact input 1 is set as the breaker 52a contact (optional).

The conditions prior to flashover detection are:

- 52a status = 0
- VAg or Vag greater than the **BRK 1 FLSHOVR V PKP** setting
- IA is below **BRK 1 FLSHOVR AMP PKP** (ideally, IA = 0)
- ΔVA is greater than the **BRK 1 FLSHOVR DIFF V PKP** setting

The conditions at flashover detection are:

- 52a status = 0
- VAg or Vag greater or lesser than the **BRK 1 FLSHOVR V PKP** setting
- IA is greater than the **BRK 1 FLSHOVR AMP PKP** setting
- ΔVA is less than the **BRK 1 FLSHOVR DIFF V PKP** setting

NOTE

The element operates only when phase-to-ground voltages are connected to relay terminals. The flashover element does not operate if delta voltages are applied.

Settings

BRK 1 FLSHOVR SIDE 1 SRC — This setting specifies a signal source used to provide three-phase voltages and three-phase currents from one side of the current breaker. The source selected as a setting and must be configured with breaker phase voltages and currents, even if only three VTs are available across the breaker.

BRK 1 FLSHOVR SIDE 2 SRC — This setting specifies a signal source used to provide another set of three phase voltages whenever six VTs are available across the breaker. For a three-VT application, set this setting to "None."

BRK 1 STATUS CLSD A to **BRK 1 STATUS CLSD C** — These settings specify FlexLogic operands to indicate the closed status of the breaker. A separate FlexLogic operand can be selected to detect individual breaker pole status and provide flashover detection. The recommended setting is 52a breaker contact or another operand defining the breaker poles closed status.

NOTE

Leaving this setting off, meaning not configuring any FlexLogic to indicated Closed Breaker leads to maloperation of the element.

BRK 1 FLSHOVR V PKP — This setting specifies a pickup level for the phase voltages from one or both sides of the breaker. If six VTs are available, opening the breaker leads to two possible combinations – live voltages from only one side of the breaker, or live voltages from both sides of the breaker. The detection of voltage above the selected value on either side of the breaker sets the scheme ready for flashover detection. Set **BRK FLSHOVR V PKP** to 85 to 90% of the nominal voltage.

BRK 1 FLSHOVR DIFF V PKP — This setting specifies a pickup level for the phase voltage difference when two VTs per phase are available across the breaker. Set this setting to be lower than the monitored voltage difference that is observed when closed or opened breaker resistors are left in service. The setting is selected as primary volts difference between the sources.

BRK 1 FLSHOVR AMP PKP — This setting specifies the normal load current which can flow through the breaker. Depending on the flashover protection application, the flashover current can vary from levels of the charging current when the line is not loaded to well above the maximum line (feeder) load (line/feeder connected to load).

BRK 1 FLSHOVR SPV A to **BRK 1 FLSHOVR SPV C** — These settings specify FlexLogic operands (per breaker pole) that supervise the operation of the element per phase. Supervision can be provided by operation of other protection elements, breaker failure, and close and trip commands. A six-cycle time delay applies after the selected FlexLogic operand resets.

BRK FLSHOVR PKP DELAY — This setting specifies the time delay to operate after a pickup condition is detected. Do not set it too long else the flashover current can disappear before its detection.

Figure 5-120: Breaker flashover logic

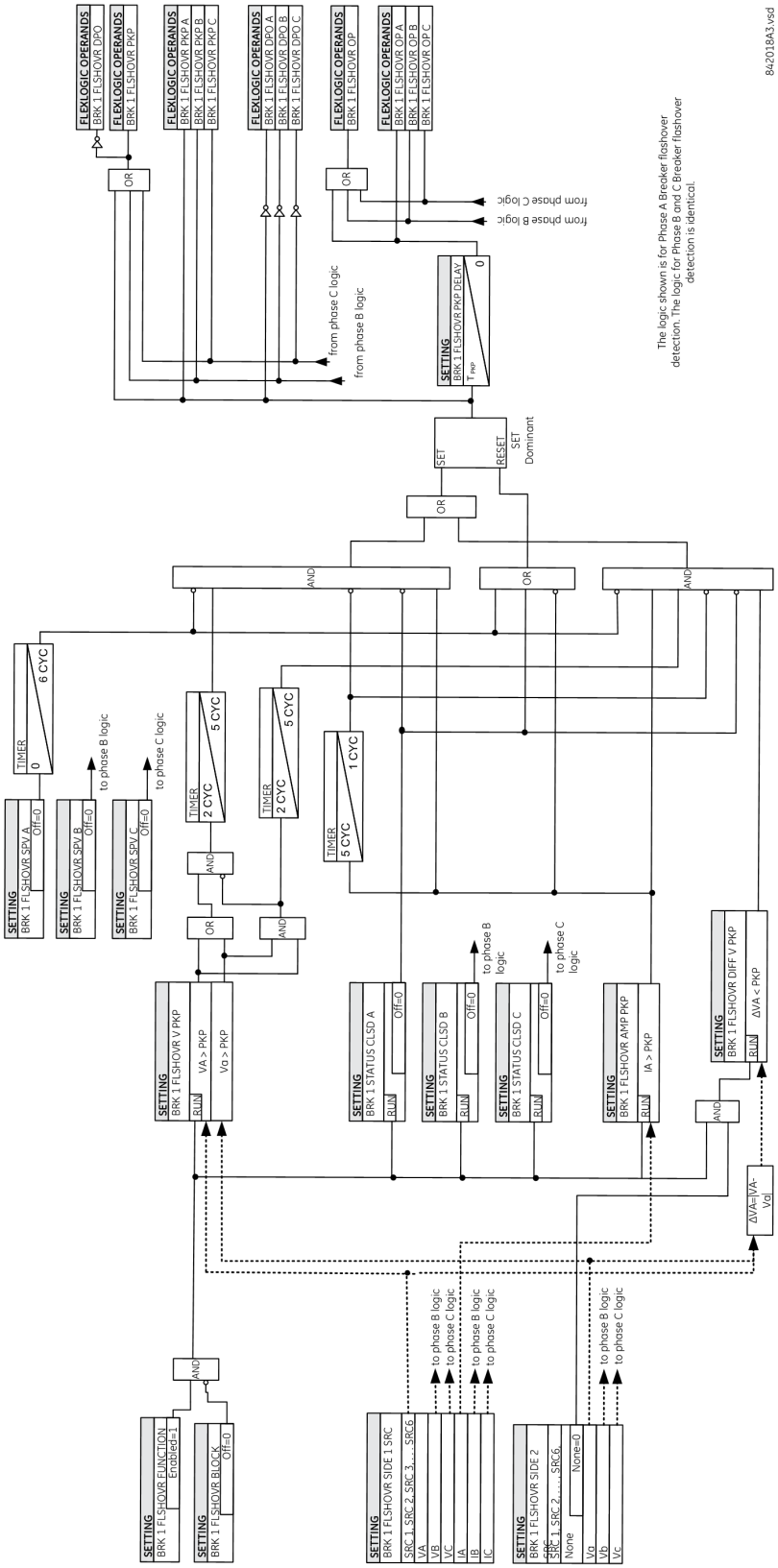

5.8.7.4 Breaker restrike

SETTINGS ⇨⇩ CONTROL ELEMENTS ⇨⇩ MONITORING ELEMENTS ⇨⇩ BREAKER RESTRIKE 1(6)

■ BREAKER RESTRIKE 1 ■	⇔	BREAKER RESTRIKE 1 FUNCTION: Disabled	Range: Disabled, Enabled
	⇩	BRK RESTRIKE 1 BLOCK: Off	Range: FlexLogic operand
	⇩	BREAKER RESTRIKE 1 SOURCE: SRC 1	Range: SRC 1, SRC 2, SRC 3, SRC 4, SRC 5, SRC 6
	⇩	BREAKER RESTRIKE 1 PICKUP: 0.50 pu	Range: 0.10 to 2.00 pu in steps of 0.01
	⇩	BREAKER RESTRIKE 1 RST DELAY: 0.100 s	Range: 0.000 to 65.535 s in steps of 0.001
	⇩	BREAKER RESTRIKE 1 HF DETECT: Enabled	Range: Disabled, Enabled
	⇩	BRK RSTR 1 BRK OPEN: Off	Range: FlexLogic operand
	⇩	BRK RSTR 1 OPEN CMD: Off	Range: FlexLogic operand
	⇩	BRK RSTR 1 CLS CMD: Off	Range: FlexLogic operand
	⇩	BREAKER RESTRIKE 1 TARGET: Self-reset	Range: Self-reset, Latched, Disabled
	⇧	BREAKER RESTRIKE 1 EVENTS: Disabled	Range: Disabled, Enabled

According to IEEE standard C37.100 entitled IEEE Standard Definitions for Power Switchgear, restrike is defined as "a resumption of current between the contacts of a switching device during an opening operation after an interval of zero current of ¼ cycle at normal frequency or longer."

Figure 5-121: Typical restrike waveform and detection flag

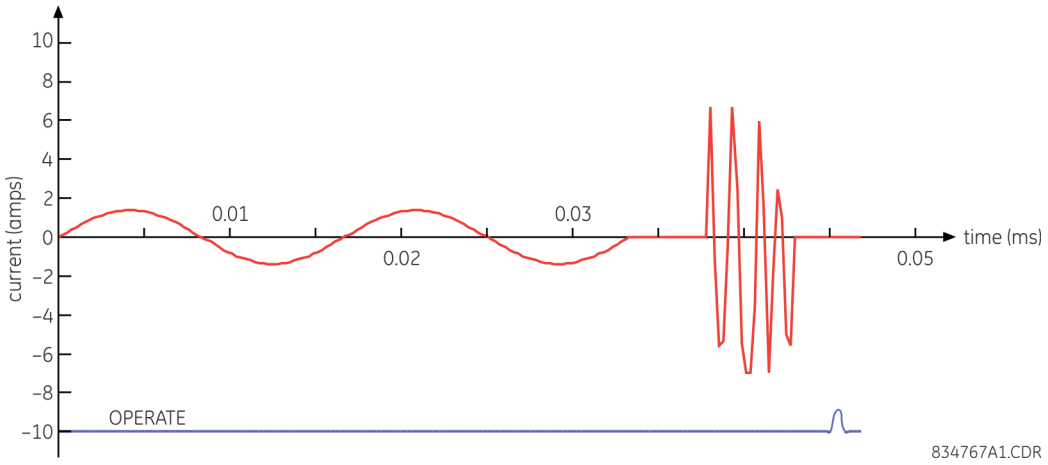

The breaker restrike algorithm responds to a successful interruption of the phase current following a declaration of capacitor bank offline as per the breaker pole indication. If a high-frequency or system frequency current with a magnitude greater than the threshold is resumed at least ¼ of a cycle later than the phase current interruption, then a breaker restrike condition is declared in the corresponding phase and the BRK RESTRIKE 1 OP operand asserts for a short period of time. The user can add counters and other logic to facilitate the decision making process as to the appropriate actions upon detecting a single restrike or a series of consecutive restrikes.

A restrike event (FlexLogic operand) is declared if all of the following hold:

- The current is initially interrupted
- The breaker status is open
- An elevated high frequency current condition occurs (if the **BREAKER RESTRIKE 1 HF DETECT** setting is Enabled, otherwise the condition is bypassed), and
- The current subsequently drops out again

The algorithm is illustrated in the following state machine diagram.

Figure 5-122: Algorithm illustration of state machine to detect restrike

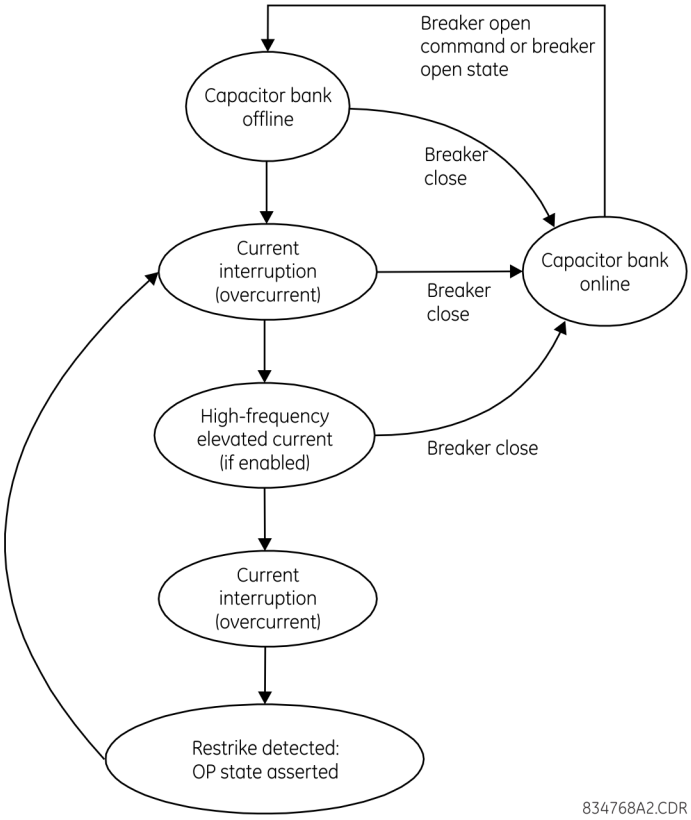

In this way, a distinction is made between a self-extinguishing restrike and permanent breaker failure condition. The latter can be detected by the breaker failure function or a regular instantaneous overcurrent element. Also, a fast succession of restrikes is picked up by breaker failure or instantaneous overcurrent protection.

The following settings are available for each element.

BREAKER RESTRIKE 1 FUNCTION — Enables and disables operation of the breaker restrike detection element. Enable only as many as the number of installed DSPs, otherwise a minor self-test is triggered.

BRK RESTRIKE 1 BLOCK — Blocks operation of the breaker restrike detection element.

BREAKER RESTRIKE 1 SOURCE — Selects the source of the current for this element. This source must have a valid CT bank assigned.

BREAKER RESTRIKE 1 PICKUP — Specifies the pickup level of the overcurrent detector in per-unit values of CT nominal current.

BREAKER RESTRIKE 1 RST DELAY — Specifies the reset delay for this element. When set to "0 ms," then FlexLogic operand is picked up for only 1/8th of the power cycle.

BREAKER RESTRIKE 1 HF DETECT — Enables/disables high-frequency (HF) pattern detection when breaker restrike occurs. High-frequency pattern is typical for capacitor bank, cables, and long transmission lines applications.

BRK RSTR 1 BRK OPEN — Assigns a FlexLogic operand indicating the open position of the breaker. It must be logic "1" when the breaker is open. It is important to assign either 52 contact with this setting or breaker close command with **BRK RSTR 1 CLS CMD** setting to give clear indication to the relay about breaker status.

BRK RSTR 1 OPEN CMD — Assigns a FlexLogic operand indicating a breaker open command. It must be logic "1" when the breaker is opened, either manually or from protection logic.

BRK RSTR 1 CLS CMD — Assigns a FlexLogic operand indicating a breaker close command. It must be logic "1" when the breaker is closed.

Figure 5-123: Breaker restrike logic

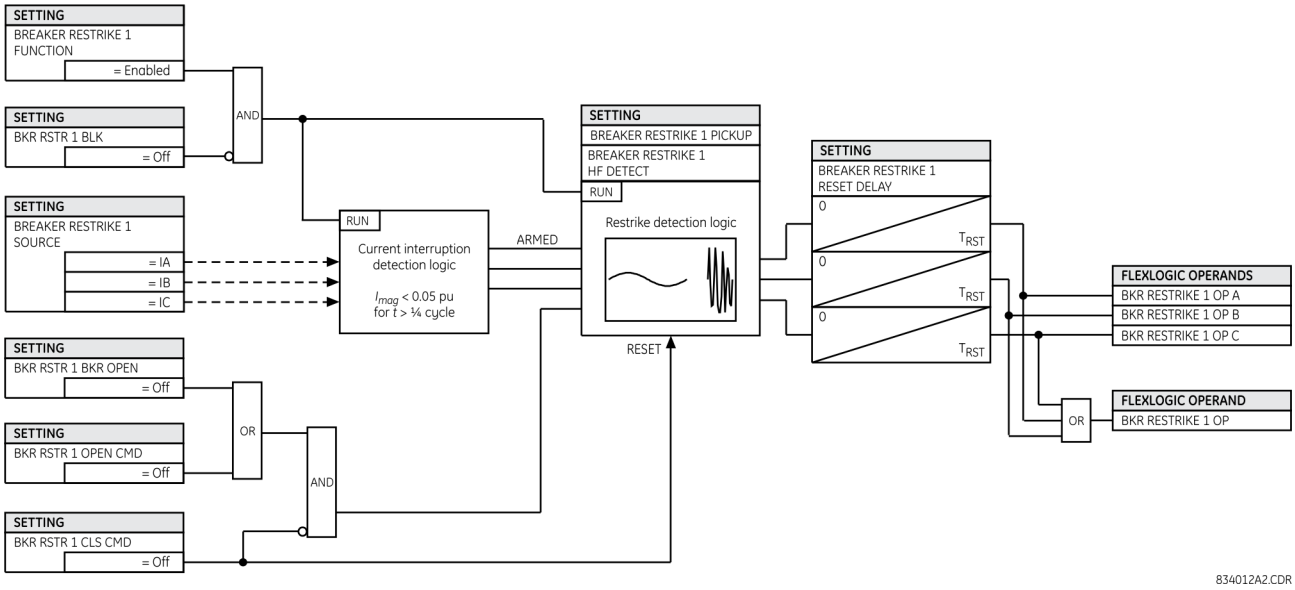

5.8.7.5 CT trouble zone (ANSI 50/74)

SETTINGS ⇨⇩ CONTROL ELEMENTS ⇨⇩ MONITORING ELEMENTS ⇨ CT TROUBLE ZONE 1(2)

■ CT TROUBLE ZONE 1 ■	⇔	**CT TROUBLE ZONE 1 FUNCTION: Disabled**	Range: Disabled, Enabled
	⇩	**CT TROUBLE ZONE 1 PICKUP: 0.100 pu**	Range: 0.020 to 2.000 pu in steps of 0.001
	⇩	**CT TROUBLE ZONE 1 DELAY: 10.0 s**	Range: 1.0 to 60.0 s in steps of 0.1
	⇩	**CT TROUBLE ZONE 1 TARGET: Self-reset**	Range: Self-reset, Latched, Disabled
	⇩	**CT TROUBLE ZONE 1 EVENTS: Disabled**	Range: Disabled, Enabled

This element uses the differential current calculated in accordance with the bus configuration programmed under Bus Zone 1. Operation of this element is therefore completely dependent on the dynamic bus replica, which must be defined first. The bus differential zones are defined using the path **SETTINGS ⇨⇩ SYSTEM SETUP ⇨⇩ BUS**. The CT Trouble element 1 detects CT problems in any of the circuits actually connected to the differential zone defined as Bus Zone 1.

The **CT TROUBLE ZONE 1 PICKUP** setting specifies the differential current level that defines an abnormal bus state. If the differential current in a given phase remains above this level for the time interval defined by the **CT TROUBLE ZONE 1 DELAY** setting, CT Trouble is declared for the given phase by setting the appropriate FlexLogic output operand.

Figure 5-124: CT trouble logic

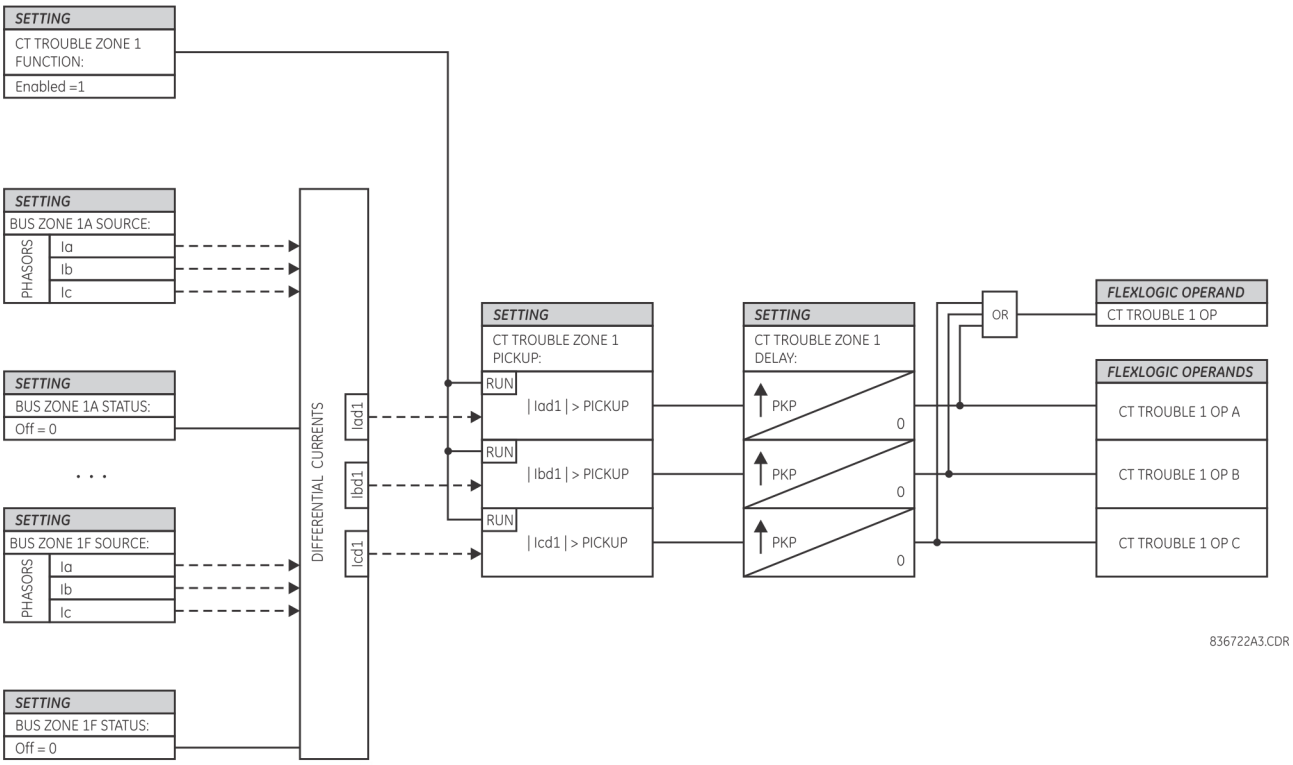

5.8.7.6 Thermal overload protection (ANSI 49)

SETTINGS ⇨⇩ CONTROL ELEMENTS ⇨⇩ MONITORING ELEMENTS ⇨⇩ THERMAL OVERLOAD PROTECTION ⇨⇩ THERMAL PROTECTION 1(2)

■ THERMAL ■ PROTECTION 1	⇔	**THERMAL PROTECTION 1 FUNCTION: Disabled**	Range: Disabled, Enabled
	⇩	**THERMAL PROTECTION 1 SOURCE: SRC1**	Range: SRC 1, SRC 2, SRC 3, SRC 4, SRC 5, SRC 6
	⇩	**THERMAL PROTECTION 1 BASE CURR: 0.80 pu**	Range: 0.20 to 3.00 pu in steps of 0.01
	⇩	**THERMAL PROTECTION 1 k FACTOR: 1.10**	Range: 1.00 to 1.20 in steps of 0.05
	⇩	**THERM PROT 1 TRIP TIME CONST: 45 min**	Range: 0 to 1000 min. in steps of 1
	⇩	**THERM PROT 1 RESET TIME CONST: 45 min**	Range: 0 to 1000 min. in steps of 1
	⇩	**THERM PROT 1 MINIM RESET TIME: 20 min**	Range: 0 to 1000 min. in steps of 1
	⇩	**THERM PROT 1 RESET: Off**	Range: FlexLogic operand
	⇩	**THERM PROT 1 BLOCK: Off**	Range: FlexLogic operand
	⇩	**THERMAL PROTECTION 1 TARGET: Self-reset**	Range: Self-reset, Latched, Disabled

⇧ **THERMAL PROTECTION 1 EVENTS: Disabled** Range: Disabled, Enabled

The thermal overload protection element corresponds to the IEC 255-8 standard and is used to detect thermal overload conditions in protected power system elements. Choosing an appropriate time constant element can be used to protect different elements of the power system. The cold curve characteristic is applied when the estimated I_p current is less than 10% of the base current. If I_p current is greater or equal than 10% than the base current, then the hot curve characteristic is applied. I_p current is estimated with a fixed time constant for both cooling and heating that reaches to the final value in two seconds on a step change (either step up or step down) signal.

The IEC255-8 cold curve is defined as follows:

$$t_{op} = \tau_{op} \times \ln\left(\frac{I^2}{I^2 - (k \times I_B)^2}\right) \quad \textbf{Eq. 5-15}$$

The IEC255-8 hot curve is defined as follows:

$$t_{op} = \tau_{op} \times \ln\left(\frac{I^2 - I_p^2}{I^2 - (k \times I_B)^2}\right) \quad \textbf{Eq. 5-16}$$

where

t_{op} = time to operate
τ_{op} = thermal protection trip time constant
I = measured overload RMS current
I_p = measured load RMS current before overload occurs
k = IEC 255-8 k-factor applied to I_B, defining maximum permissible current above nominal current
I_B = protected element base (nominal) current

To ensure element accuracy for high overcurrent conditions, the maximum value of $I/(k \times I_B)$ is limited to 8, even when realistically it is exceeding this value.

The reset time of the thermal overload protection element is also time delayed using following formula:

$$t_{rst} = \tau_{rst} \times \ln\left(\frac{(k \times I_B)^2}{\left|I^2 - (k \times I_B)^2\right|}\right) + T_{min} \quad \textbf{Eq. 5-17}$$

where

τ_{rst} = thermal protection trip time constant
T_{min} = a minimum reset time setting

Figure 5-125: IEC 255-8 sample operate and reset curves

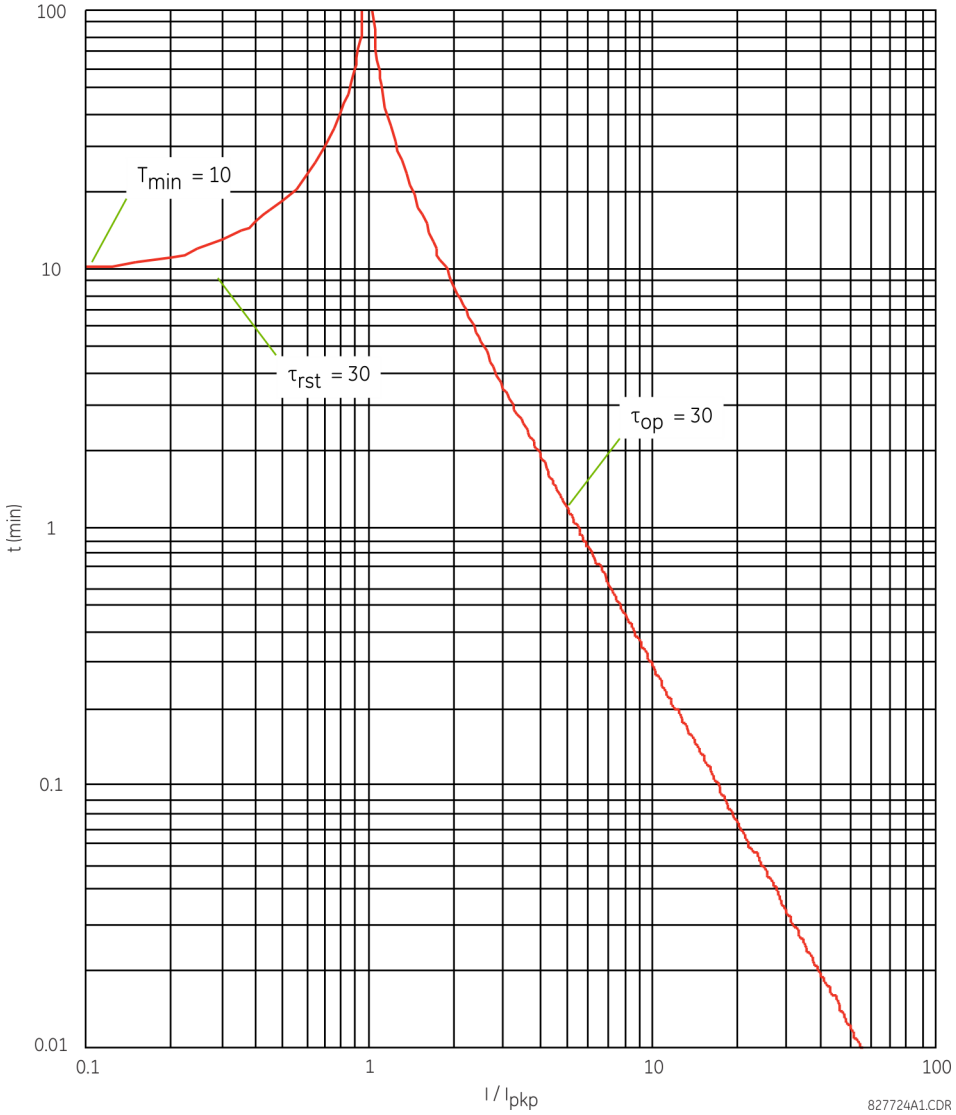

The thermal overload protection element estimates accumulated thermal energy E using the following equations calculated each power cycle. When current is greater than the pickup level, $I_n > k \times I_B$, element starts increasing the thermal energy:

$$E_n = E_{n-1} + \frac{\Delta t}{t_{op(In)}} \qquad \textbf{Eq. 5-18}$$

When current is less than the dropout level, $I_n > 0.97 \times k \times I_B$, the element starts decreasing the thermal energy:

$$E_n = E_{n-1} - \frac{\Delta t}{t_{rst(In)}} \qquad \textbf{Eq. 5-19}$$

where

Δt is the power cycle duration
n is the power cycle index
$t_{op(In)}$ is the trip time calculated at index n as per the IEC255-8 cold curve or hot curve equations
$t_{rst(In)}$ is the reset time calculated at index n as per the reset time equation

I_n is the measured overload RMS current at index n
E_n is the accumulated energy at index n
E_{n-1} is the accumulated energy at index n – 1

The thermal overload protection element removes the **THERMAL PROT 1 OP** output operand when E < 0.05. In case of emergency, the thermal memory and **THERMAL PROT 1 OP** output operand can be reset using **THERM PROT 1 RESET** setting. All calculations are performed per phase. If the accumulated energy reaches value 1 in any phase, the thermal overload protection element operates and only resets when energy is less than 0.05 in all three phases.

Table 5-32: Typical time constants

Protected equipment	Time constant	Minimum reset time
Capacitor bank	10 minutes	30 minutes
Overhead line	10 minutes	20 minutes
Air-core reactor	40 minutes	30 minutes
Busbar	60 minutes	20 minutes
Underground cable	20 to 60 minutes	60 minutes

The figure shows the logic for the thermal overload protection element.

Figure 5-126: Thermal overload protection logic

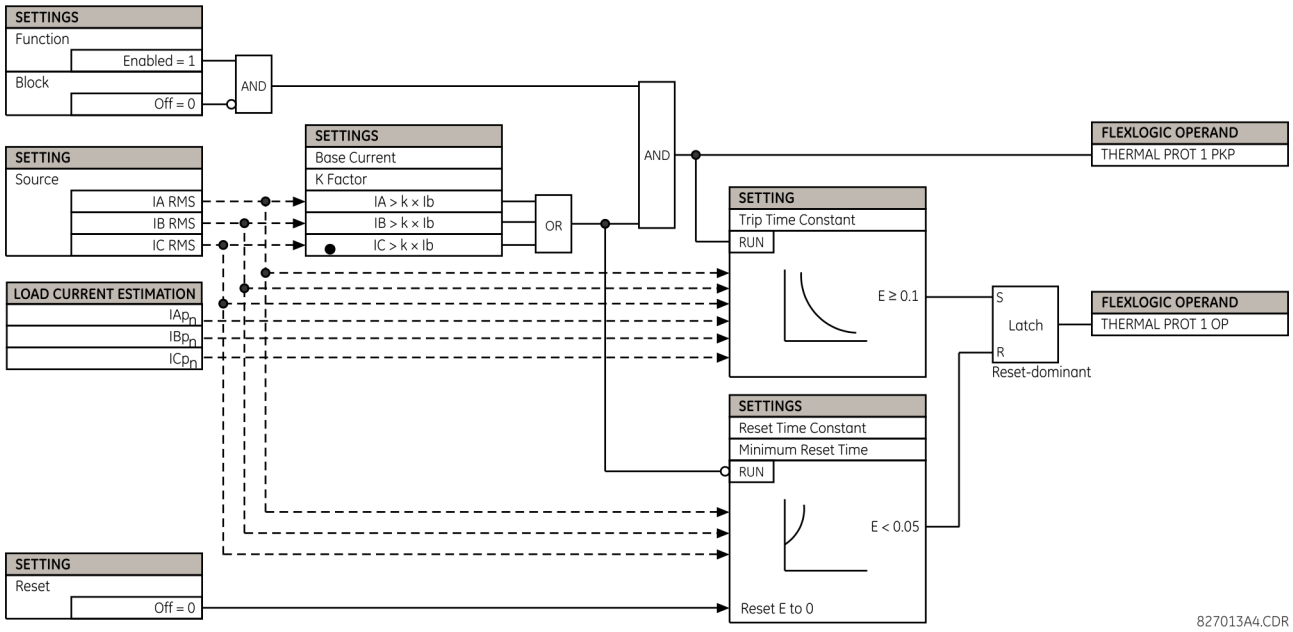

5.9 Inputs/outputs

5.9.1 Contact inputs

SETTINGS ⇨⇩ INPUTS/OUTPUTS ⇨ CONTACT INPUTS

■ **CONTACT INPUTS**
■

⇔ ■ **CONTACT INPUT H5a**
■

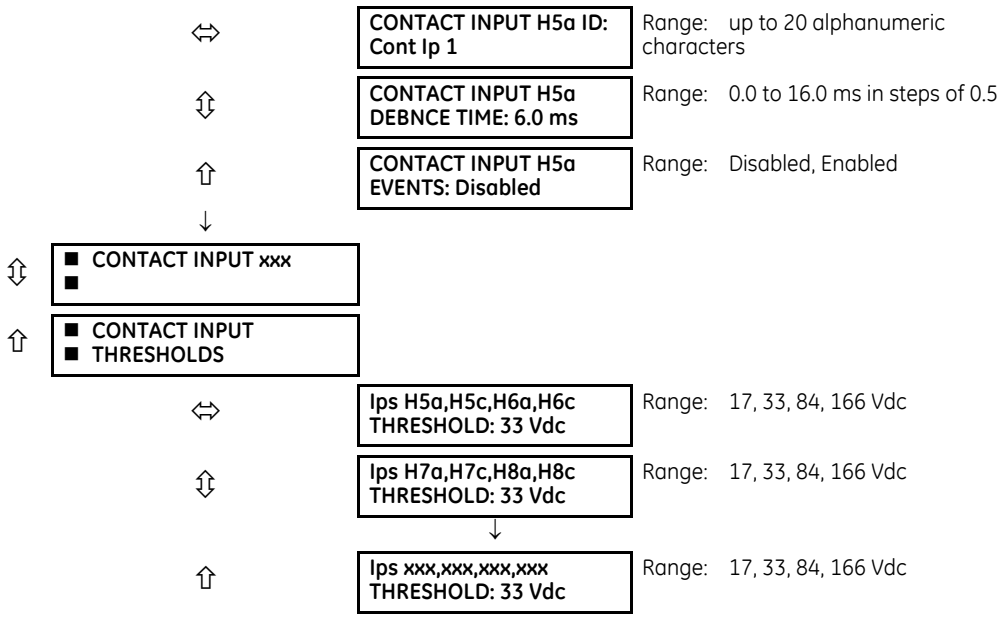

Contact inputs and outputs are digital signals associated with connections to hard-wired contacts. Wet and dry contacts are supported.

The contact inputs menu contains configuration settings for each contact input as well as voltage thresholds for each group of four contact inputs. Upon startup, the relay processor determines (from an assessment of the installed modules) which contact inputs are available and then display settings for only those inputs.

An alphanumeric ID can be assigned to a contact input for diagnostic, setting, and event recording purposes. The CONTACT IP X On (Logic 1) FlexLogic operand corresponds to contact input "X" being closed, while CONTACT IP X Off corresponds to contact input "X" being open. The **CONTACT INPUT DEBNCE TIME** defines the time required for the contact to overcome 'contact bouncing' conditions. As this time differs for different contact types and manufacturers, set it as a maximum contact debounce time (per manufacturer specifications) plus some margin to ensure proper operation. If **CONTACT INPUT EVENTS** is set to "Enabled," every change in the contact input state triggers an event.

A raw status is scanned for all Contact Inputs synchronously at the constant rate of 0.5 ms as shown in the following figure. The DC input voltage is compared to a user-settable threshold. A new contact input state must be maintained for a user-settable debounce time in order for the B30 to validate the new contact state. In the following figure, the debounce time is set at 2.5 ms; thus the 6th sample in a row validates the change of state (mark no. 1 in the diagram). Once validated (de-bounced), the contact input asserts a corresponding FlexLogic operand and logs an event as per user setting.

A time stamp of the first sample in the sequence that validates the new state is used when logging the change of the contact input into the Event Recorder (mark no. 2 in the figure).

Protection and control elements, as well as FlexLogic equations and timers, are executed eight times in a power system cycle. The protection pass duration is controlled by the frequency tracking mechanism. The FlexLogic operand reflecting the debounced state of the contact is updated at the protection pass following the validation (marks no. 3 and 4 on the figure that follows). The update is performed at the beginning of the protection pass so all protection and control functions, as well as FlexLogic equations, are fed with the updated states of the contact inputs.

The FlexLogic operand response time to the contact input change is equal to the debounce time setting plus up to one protection pass (variable and depending on system frequency if frequency tracking enabled). If the change of state occurs just after a protection pass, the recognition is delayed until the subsequent protection pass; that is, by the entire duration of the protection pass. If the change occurs just prior to a protection pass, the state is recognized immediately. Statistically a delay of half the protection pass is expected. Owing to the 0.5 ms scan rate, the time resolution for the input contact is below 1 ms.

For example, eight protection passes per cycle on a 60 Hz system correspond to a protection pass every 2.1 ms. With a contact debounce time setting of 3.0 ms, the FlexLogic operand-assert time limits are: 3.0 + 0.0 = 3.0 ms and 3.0 + 2.1 = 5.1 ms. These time limits depend on how soon the protection pass runs after the debouncing time.

Regardless of the contact debounce time setting, the contact input event is time-stamped with a 1 µs accuracy using the time of the first scan corresponding to the new state (mark no. 2 shown). Therefore, the time stamp reflects a change in the DC voltage across the contact input terminals that was not accidental as it was subsequently validated using the debounce timer. Keep in mind that the associated FlexLogic operand is asserted/de-asserted later, after validating the change.

The debounce algorithm is symmetrical: the same procedure and debounce time are used to filter the LOW-HIGH (marks no.1, 2, 3, and 4 in the figure) and HIGH-LOW (marks no. 5, 6, 7, and 8) transitions.

Figure 5-127: Input contact debouncing mechanism and time stamp sample timing

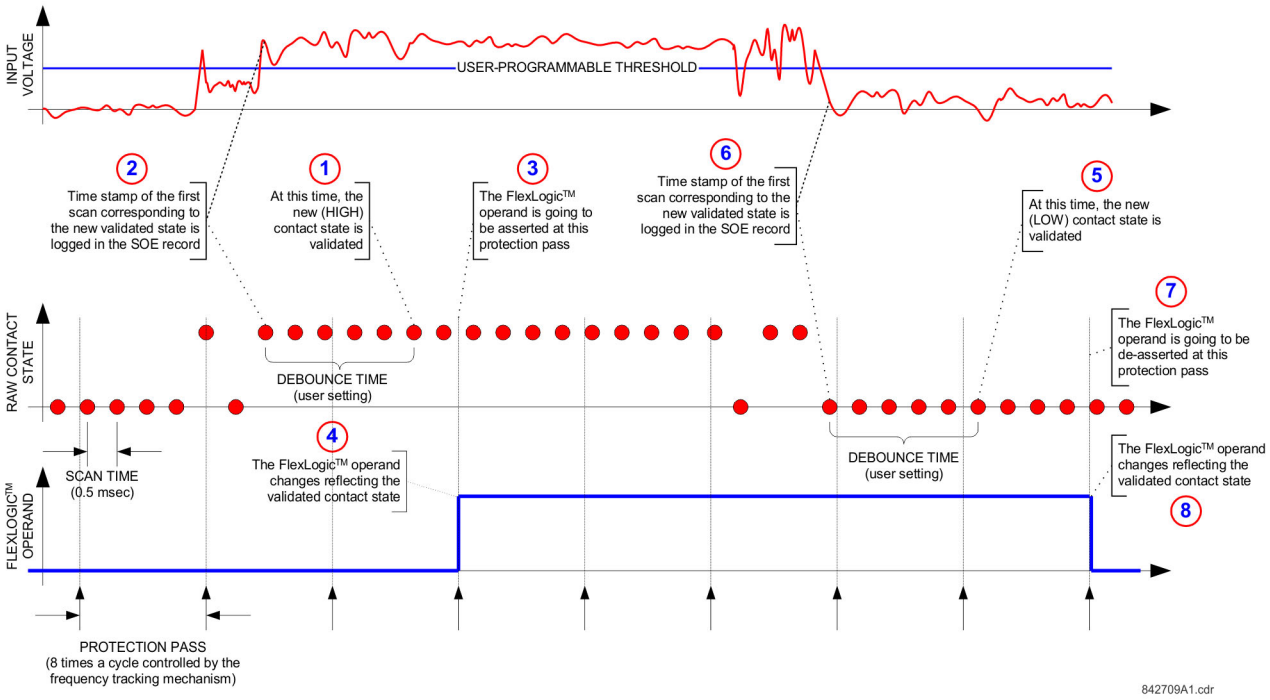

Contact inputs are isolated in groups of four to allow connection of wet contacts from different voltage sources for each group. The **CONTACT INPUT THRESHOLDS** determine the minimum voltage required to detect a closed contact input. This value is selected according to the following criteria: 17 for 24 V sources, 33 for 48 V sources, 84 for 110 to 125 V sources and 166 for 250 V sources.

For example, to use contact input H5a as a status input from the breaker 52b contact to seal-in the trip relay and record it in the Event Records menu, make the following settings changes:

CONTACT INPUT H5a ID: "Breaker Closed (52b)"
CONTACT INPUT H5a EVENTS: "Enabled"

Note that the 52b contact is closed when the breaker is open and open when the breaker is closed.

5.9.2 Virtual inputs

SETTINGS ⇨⇩ INPUTS/OUTPUTS ⇨⇩ VIRTUAL INPUTS ⇨ VIRTUAL INPUT 1(64)

■ VIRTUAL INPUT 1 ■	⇔	VIRTUAL INPUT 1 FUNCTION: Disabled	Range: Disabled, Enabled
	⇕	VIRTUAL INPUT 1 ID: Virt Ip 1	Range: up to 20 alphanumeric characters
	⇕	VIRTUAL INPUT 1 TYPE: Latched	Range: Self-Reset, Latched

⇧	**VIRTUAL INPUT 1 EVENTS: Disabled**	Range: Disabled, Enabled

The virtual inputs and outputs are digital signals associated with UR-series internal logic signals. Virtual inputs include signals generated by the local user interface. The virtual outputs are outputs of FlexLogic equations used to customize the device. Virtual outputs can also serve as virtual inputs to FlexLogic equations.

There are 64 virtual inputs that can be individually programmed to respond to input signals from the keypad (via the **COMMANDS** menu) and communications protocols. All virtual input operands are defaulted to "Off" (logic 0) unless the appropriate input signal is received.

If the **VIRTUAL INPUT x FUNCTION** is to "Disabled," the input is forced to off (logic 0) regardless of any attempt to alter the input. If set to "Enabled," the input operates as shown on the logic diagram and generates output FlexLogic operands in response to received input signals and the applied settings.

There are two types of operation: self-reset and latched. If **VIRTUAL INPUT x type** is "Self-Reset," when the input signal transits from off to on, the output operand is set to on for only one evaluation of the FlexLogic equations and then return to off. If set to "Latched," the virtual input sets the state of the output operand to the same state as the most recent received input.

The self-reset operating mode generates the output operand for a single evaluation of the FlexLogic equations. If the operand is to be used anywhere other than internally in a FlexLogic equation, it likely needs to be lengthened in time. A FlexLogic timer with a delayed reset can perform this function.

Figure 5-128: Virtual inputs logic

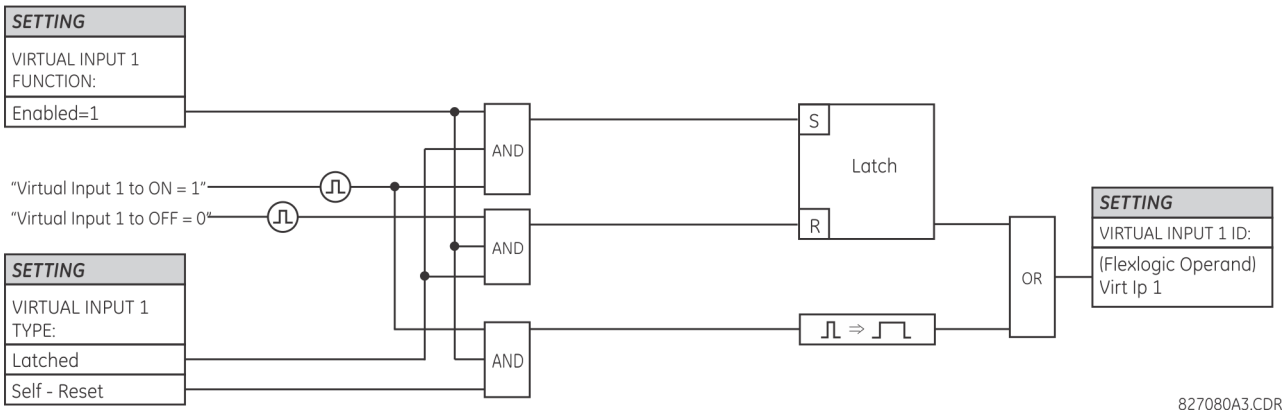

5.9.3 Contact outputs

5.9.3.1 Digital outputs

SETTINGS ⇨⇩ INPUTS/OUTPUTS ⇨⇩ CONTACT OUTPUTS ⇨⇩ CONTACT OUTPUT H1

■ **CONTACT OUTPUT H1** ■	⇔	**CONTACT OUTPUT H1 ID Cont Op 1**	Range: up to 20 alphanumeric characters
	⇩	**OUTPUT H1 OPERATE: Off**	Range: FlexLogic operand
	⇩	**OUTPUT H1 SEAL-IN: Off**	Range: FlexLogic operand
	⇧	**CONTACT OUTPUT H1 EVENTS: Enabled**	Range: Disabled, Enabled

A contact inputs and outputs are digital signals associated with connections to hard-wired contacts. Wet and dry contacts are supported.

Upon startup of the relay, the main processor determines from an assessment of the modules installed in the chassis which contact outputs are available and then presents the settings for only these outputs. Where the contact input is non-latching, the settings are as shown.

An ID can be assigned to each contact output. The signal that can OPERATE a contact output can be any FlexLogic operand (virtual output, element state, contact input, or virtual input). An additional FlexLogic operand can be used to SEAL-IN the relay. Any change of state of a contact output can be logged as an Event if programmed to do so.

For example, the trip circuit current is monitored by providing a current threshold detector in series with some Form-A contacts (see the trip circuit example in the Digital Elements section). The monitor sets a flag (see the specifications for Form-A). The name of the FlexLogic operand set by the monitor, consists of the output relay designation, followed by the name of the flag; for example, Cont OP 1 IOn.

In most breaker control circuits, the trip coil is connected in series with a breaker auxiliary contact used to interrupt current flow after the breaker has tripped, to prevent damage to the less robust initiating contact. This can be done by monitoring an auxiliary contact on the breaker which opens when the breaker has tripped, but this scheme is subject to incorrect operation caused by differences in timing between breaker auxiliary contact change-of-state and interruption of current in the trip circuit. The most dependable protection of the initiating contact is provided by directly measuring current in the tripping circuit, and using this parameter to control resetting of the initiating relay. This scheme is often called trip seal-in.

This can be realized using the Cont OP 1 IOn FlexLogic operand to seal-in the contact output as follows:

CONTACT OUTPUT H1 ID: "Cont Op 1"
OUTPUT H1 OPERATE: any suitable FlexLogic operand
OUTPUT H1 SEAL-IN: "Cont Op 1 IOn"
CONTACT OUTPUT H1 EVENTS: "Enabled"

5

Figure 5-129: Contact input/output module type 6A contact 1 logic

5.9.3.2 Latching outputs

SETTINGS ⇨⇩ INPUTS/OUTPUTS ⇨⇩ CONTACT OUTPUTS ⇨ CONTACT OUTPUT H1a

■ **CONTACT OUTPUT H1a** ■	⇔	**OUTPUT H1a ID L-Cont Op 1**	Range: up to 20 alphanumeric characters
	⇩	**OUTPUT H1a OPERATE: Off**	Range: FlexLogic operand
	⇩	**OUTPUT H1a RESET: Off**	Range: FlexLogic operand
	⇩	**OUTPUT H1a TYPE: Operate-dominant**	Range: Operate-dominant, Reset-dominant
	⇩	**OUTPUT H1a EVENTS: Disabled**	Range: Disabled, Enabled

The latching output contacts are mechanically bi-stable and controlled by two separate (open and close) coils. As such they retain their position even if the relay is not powered up. The relay recognizes all latching output contact cards and populates the setting menu accordingly. On power up, the relay reads positions of the latching contacts from the hardware before executing any other functions of the relay (such as protection and control features or FlexLogic).

The latching output modules, either as a part of the relay or as individual modules, are shipped from the factory with all latching contacts opened. It is highly recommended to double-check the programming and positions of the latching contacts when replacing a module.

Since the relay asserts the output contact and reads back its position, it is possible to incorporate self-monitoring capabilities for the latching outputs. If any latching outputs exhibits a discrepancy, the LATCHING OUTPUT ERROR self-test error is declared. The error is signaled by the LATCHING OUT ERROR FlexLogic operand, event, and target message.

OUTPUT H1a OPERATE — This setting specifies a FlexLogic operand to operate the 'close coil' of the contact. The relay seals-in this input to safely close the contact. Once the contact is closed and the **RESET** input is logic 0 (off), any activity of the **OPERATE** input, such as subsequent chattering, does not have any effect. With both the **OPERATE** and **RESET** inputs active (logic 1), the response of the latching contact is specified by the **OUTPUT H1a TYPE** setting.

OUTPUT H1a RESET — This setting specifies a FlexLogic operand to operate the 'trip coil' of the contact. The relay seals-in this input to safely open the contact. Once the contact is opened and the **OPERATE** input is logic 0 (off), any activity of the **RESET** input, such as subsequent chattering, does not have any effect. With both the **OPERATE** and **RESET** inputs active (logic 1), the response of the latching contact is specified by the **OUTPUT H1a TYPE** setting.

OUTPUT H1a TYPE — This setting specifies the contact response under conflicting control inputs; that is, when both the **OPERATE** and **RESET** signals are applied. With both control inputs applied simultaneously, the contact closes if set to "Operate-dominant" and opens if set to "Reset-dominant."

Figure 5-130: Contact input/output module type 4L contact 1 logic

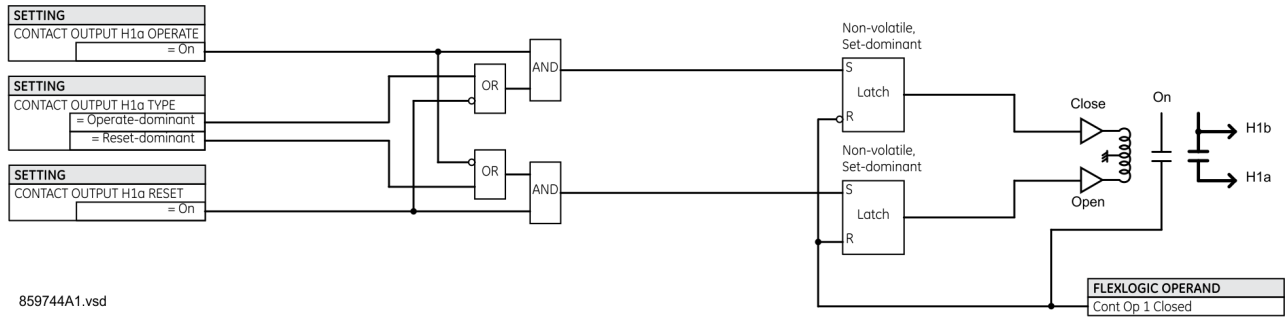

Application example 1

A latching output contact H1a is to be controlled from two user-programmable pushbuttons (buttons number 1 and 2). The following settings are applied.

Program the Latching Outputs by making the following changes in the **SETTINGS ⇨⇩ INPUTS/OUTPUTS ⇨⇩ CONTACT OUTPUTS ⇨ CONTACT OUTPUT H1a** menu (assuming an H4L module):

OUTPUT H1a OPERATE: "PUSHBUTTON 1 ON"
OUTPUT H1a RESET: "PUSHBUTTON 2 ON"

Program the pushbuttons by making the following changes in the **PRODUCT SETUP ⇨⇩ USER-PROGRAMMABLE PUSHBUTTONS ⇨⇩ USER PUSHBUTTON 1** and **USER PUSHBUTTON 2** menus:

PUSHBUTTON 1 FUNCTION: "Self-reset"
PUSHBTN 1 DROP-OUT TIME: "0.00 s"
PUSHBUTTON 2 FUNCTION: "Self-reset"
PUSHBTN 2 DROP-OUT TIME: "0.00 s"

Application example 2

A relay, having two latching contacts H1a and H1c, is to be programmed. The H1a contact is to be a Type-a contact, while the H1c contact is to be a Type-b contact (Type-a means closed after exercising the operate input; Type-b means closed after exercising the reset input). The relay is to be controlled from virtual outputs: VO1 to operate and VO2 to reset.

Program the Latching Outputs by making the following changes in the **SETTINGS ⇨⇩ INPUTS/OUTPUTS ⇨⇩ CONTACT OUTPUTS ⇨ CONTACT OUTPUT H1a** and **CONTACT OUTPUT H1c** menus (assuming an H4L module):

OUTPUT H1a OPERATE: "VO1"
OUTPUT H1a RESET: "VO2"
OUTPUT H1c OPERATE: "VO2"
OUTPUT H1c RESET: "VO1"

Since the two physical contacts in this example are mechanically separated and have individual control inputs, they do not operate at exactly the same time. A discrepancy in the range of a fraction of a maximum operating time can occur. Therefore, a pair of contacts programmed to be a multi-contact relay do not guarantee any specific sequence of operation (such as make before break). If required, the sequence of operation must be programmed explicitly by delaying some of the control inputs as shown in the next application example.

Application example 3

A make before break functionality must be added to the preceding example. An overlap of 20 ms is required to implement this functionality.

Write the following FlexLogic equation (EnerVista example shown).

FlexLogic Equation Editor // D60_490.urs : C:\Program Files\GE Multilin\EnerVist...

Save | Restore | Default | FlexLogic Equation Editor // D60_490.urs : C:\Program F

FLEXLOGIC ENTRY	TYPE	SYNTAX
View Graphic	View	View
FlexLogic Entry 1	Virtual Outputs On	Virt Op 1 On (VO1)
FlexLogic Entry 2	TIMER	Timer 1
FlexLogic Entry 3	Assign Virtual Output	= Virt Op 3 (VO3)
FlexLogic Entry 4	Virtual Outputs On	Virt Op 2 On (VO2)
FlexLogic Entry 5	TIMER	Timer 2
FlexLogic Entry 6	Assign Virtual Output	= Virt Op 4 (VO4)
FlexLogic Entry 7	End of List	

D60_490.urs FlexLogic

Set both timers (Timer 1 and Timer 2) to 20 ms pickup and 0 ms dropout.

Program the Latching Outputs by making the following changes in the **SETTINGS ⇨⇩ INPUTS/OUTPUTS ⇨⇩ CONTACT OUTPUTS ⇨ CONTACT OUTPUT H1a** and **CONTACT OUTPUT H1c** menus (assuming an H4L module):

OUTPUT H1a OPERATE: "VO1"
OUTPUT H1a RESET: "VO4"
OUTPUT H1c OPERATE: "VO2"
OUTPUT H1c RESET: "VO3"

Application example 4

A latching contact H1a is to be controlled from a single virtual output VO1. The contact is to remain closed as long as VO1 is high, and is to remain opened when VO1 is low. Program the relay as follows.

Write the following FlexLogic equation (EnerVista example shown).

FlexLogic Equation Editor // D60_490.urs : C:\Program Files\GE Multilin\EnerVist...

Save | Restore | Default | Reset

FLEXLOGIC ENTRY	TYPE	SYNTAX
View Graphic	View	View
FlexLogic Entry 1	Virtual Outputs On	Virt Op 1 On (VO1)
FlexLogic Entry 2	NOT	1 Input
FlexLogic Entry 3	Assign Virtual Output	= Virt Op 2 (VO2)
FlexLogic Entry 4	End of List	

D60_490.urs FlexLogic

Program the Latching Outputs by making the following changes in the **SETTINGS ⇨⇩ INPUTS/OUTPUTS ⇨⇩ CONTACT OUTPUTS ⇨ CONTACT OUTPUT H1a** menu (assuming an H4L module):

OUTPUT H1a OPERATE: "VO1"
OUTPUT H1a RESET: "VO2"

5.9.4 Virtual outputs

SETTINGS ⇨⇩ INPUTS/OUTPUTS ⇨⇩ VIRTUAL OUTPUTS ⇨ VIRTUAL OUTPUT 1(96)

■ VIRTUAL OUTPUT 1 ■	⇔	VIRTUAL OUTPUT 1 ID Virt Op 1	Range: up to 20 alphanumeric characters
	⇧	VIRTUAL OUTPUT 1 EVENTS: Disabled	Range: Disabled, Enabled

The virtual inputs and outputs are digital signals associated with UR-series internal logic signals. Virtual inputs include signals generated by the local user interface. The virtual outputs are outputs of FlexLogic equations used to customize the device. Virtual outputs can also serve as virtual inputs to FlexLogic equations.

There are 96 virtual outputs that can be assigned using FlexLogic. If not assigned, the output is forced to 'OFF' (Logic 0). An ID also can be assigned to each virtual output. Virtual outputs are resolved in each pass through the evaluation of the FlexLogic equations. Any change of state of a virtual output can be logged as an event if programmed to do so.

For example, if Virtual Output 1 is the trip signal from FlexLogic and the trip relay is used to signal events, the settings is programmed as follows:

VIRTUAL OUTPUT 1 ID: "Trip"
VIRTUAL OUTPUT 1 EVENTS: "Disabled"

5.9.5 Resetting

SETTINGS ⇨⇩ INPUTS/OUTPUTS ⇨⇩ RESETTING

■ RESETTING ■	⇔	RESET OPERAND: Off	Range: FlexLogic operand

Some events can be programmed to latch the faceplate LED event indicators, target messages, and/or graphical panel annunciator windows. Once set, the latching mechanism holds all of the latched indicators or messages in the set state after the initiating condition has cleared until a **RESET** command is received to return these latches (not including FlexLogic latches) to the reset state where the initiating condition has cleared. The **RESET** command can be sent from the faceplate **RESET** button, a remote device via a communications channel, or any selected operand.

The three sources of **RESET** commands each activates the RESET OP FlexLogic operand. Each individual source of a **RESET** command also creates its individual operand RESET OP (PUSHBUTTON), RESET OP (COMMS), or RESET OP (OPERAND) to identify the source of the command. Each of these three operands generates an event in the event record when activated. The **RESET OPERAND** setting here selects the operand that activates the RESET OP (OPERAND) operand.

5.9.6 Direct inputs and outputs

5.9.6.1 Direct inputs

SETTINGS ⇨⇩ INPUTS/OUTPUTS ⇨⇩ DIRECT INPUTS ⇨ DIRECT INPUT 1(32)

■ DIRECT INPUT 1 ■	⇔	DIRECT INPUT 1 NAME: Dir Ip 1	Range: up to 12 alphanumeric characters
	⇩	DIRECT INPUT 1 DEVICE ID: 0	Range: 0 to 16
	⇩	DIRECT INPUT 1 BIT NUMBER: 0	Range: 0 to 32
	⇩	DIRECT INPUT 1 DEFAULT: Off	Range: On, Off, Latest/On, Latest/Off

⇧	**DIRECT INPUT 1 EVENTS: Disabled**	Range: Enabled, Disabled

These settings specify how the direct input information is processed.

DIRECT INPUT 1 NAME — This setting allows the user to assign a descriptive name to the direct input.

DIRECT INPUT 1 DEVICE ID — Represents the source of direct input 1. The specified direct input is driven by the device identified here.

DIRECT INPUT 1 BIT NUMBER — The bit number to extract the state for direct input 1. Direct Input 1 is driven by the bit identified as **DIRECT INPUT 1 BIT NUMBER**. This corresponds to the direct output number of the sending device.

DIRECT INPUT 1 DEFAULT — Represents the state of the direct input when the associated direct device is offline. The following choices are available:

- On — Defaults the input to Logic 1
- Off — Defaults the input to Logic 0
- Latest/On — Freezes the input in case of lost communications. When the latest state is not known, such as after relay power-up but before the first communication exchange, the input defaults to Logic 1. When communication resumes, the input becomes fully operational.
- Latest/Off — Freezes the input in case of lost communications. When the latest state is not known, such as after relay power-up but before the first communication exchange, the input defaults to Logic 0. When communication resumes, the input becomes fully operational.

5.9.6.2 Direct outputs

SETTINGS ⇨⇩ INPUTS/OUTPUTS ⇨⇩ DIRECT OUTPUTS ⇨ DIRECT OUTPUT 1(32)

■ **DIRECT OUTPUT 1** ■	⇔	**DIRECT OUT 1 NAME: Dir Out 1**	Range: up to 12 alphanumeric characters
	⇩	**DIRECT OUT 1 OPERAND: Off**	Range: FlexLogic operand
	⇧	**DIRECT OUTPUT 1 EVENTS: Disabled**	Range: Enabled, Disabled

DIRECT OUT 1 NAME — This setting allows the user to assign a descriptive name to the direct output.

DIR OUT 1 OPERAND — This sets the FlexLogic operand that determines the state of this direct output.

5.9.6.3 Application examples

The examples introduced in the earlier Direct Inputs and Outputs section (part of the Product Setup section) are continued here to illustrate usage of the direct inputs and outputs.

Example 1: Extending input/output capabilities of a UR relay

Consider an application that requires additional quantities of contact inputs or output contacts or lines of programmable logic that exceed the capabilities of a single UR-series chassis. The problem is solved by adding an extra UR-series IED, such as the C30, to satisfy the additional inputs/outputs and programmable logic requirements. The figure shows that two IEDs are connected via single-channel digital communication cards.

Figure 5-131: Input and output extension via direct inputs and outputs

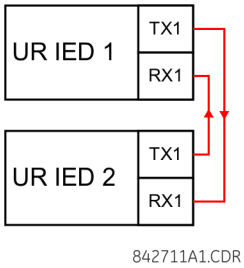

Assume that contact input 1 from UR IED 2 is to be used by UR IED 1. The following settings are applied (Direct Input 5 and bit number 12 are used, as an example).

UR IED 1:

DIRECT INPUT 5 DEVICE ID = "2"
DIRECT INPUT 5 BIT NUMBER = "12"

UR IED 2:

DIRECT OUT 12 OPERAND = "Cont Ip 1 On"

The Cont Ip 1 On operand of UR IED 2 is now available in UR IED 1 as DIRECT INPUT 5 ON.

Example 2: Interlocking busbar protection

A simple interlocking busbar protection scheme can be accomplished by sending a blocking signal from downstream devices, say 2, 3 and 4, to the upstream device that monitors a single incomer of the busbar, as shown in the figure.

Figure 5-132: Sample interlocking busbar protection scheme

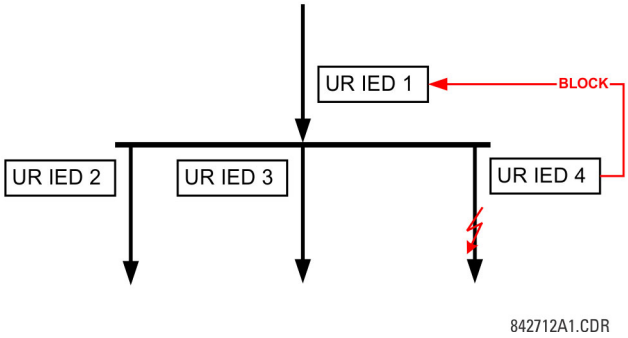

Assume that Phase Instantaneous Overcurrent 1 is used by Devices 2, 3, and 4 to block Device 1. If not blocked, Device 1 trips the bus upon detecting a fault and applying a short coordination time delay.

The following settings are applied (assume Bit 3 is used by all 3 devices to send the blocking signal and Direct Inputs 7, 8, and 9 are used by the receiving device to monitor the three blocking signals).

UR IED 2:

DIRECT OUT 3 OPERAND: "PHASE IOC1 OP"

UR IED 3:

DIRECT OUT 3 OPERAND: "PHASE IOC1 OP"

UR IED 4:

DIRECT OUT 3 OPERAND: "PHASE IOC1 OP"

UR IED 1:

DIRECT INPUT 7 DEVICE ID: "2"
DIRECT INPUT 7 BIT NUMBER: "3"
DIRECT INPUT 7 DEFAULT STATE: select "On" for security, select "Off" for dependability

DIRECT INPUT 8 DEVICE ID: "3"
DIRECT INPUT 8 BIT NUMBER: "3"
DIRECT INPUT 8 DEFAULT STATE: select "On" for security, select "Off" for dependability

DIRECT INPUT 9 DEVICE ID: "4"
DIRECT INPUT 9 BIT NUMBER: "3"
DIRECT INPUT 9 DEFAULT STATE: select "On" for security, select "Off" for dependability

Now the three blocking signals are available in UR IED 1 as DIRECT INPUT 7 ON, DIRECT INPUT 8 ON, and DIRECT INPUT 9 ON. Upon losing communications or a device, the scheme is inclined to block (if any default state is set to "On"), or to trip the bus on any overcurrent condition (all default states set to "Off").

Example 3: Pilot-aided schemes

Consider a three-terminal line protection application shown in the following figure.

Figure 5-133: Three-terminal line application

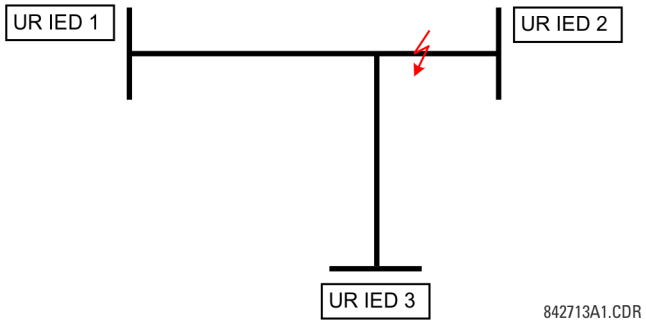

Assume the Hybrid Permissive Overreaching Transfer Trip (Hybrid POTT) scheme is applied using the architecture shown as follows. The scheme output operand HYB POTT TX1 is used to key the permission.

Figure 5-134: Single-channel open-loop configuration

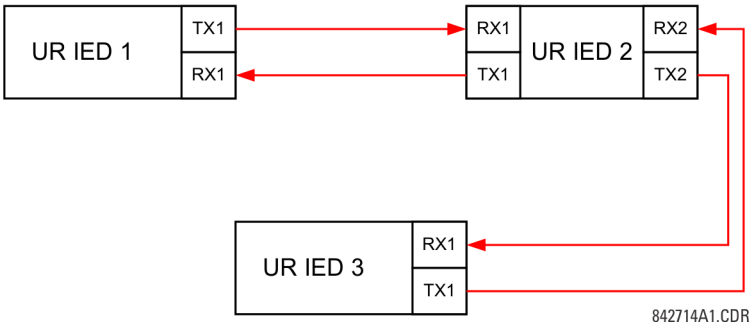

In this architecture, Devices 1 and 3 do not communicate directly. Therefore, Device 2 must act as a 'bridge'. The following settings are applied:

UR IEC 1:

DIRECT OUT 2 OPERAND: "HYB POTT TX1"
DIRECT INPUT 5 DEVICE ID: "2"
DIRECT INPUT 5 BIT NUMBER: "2" (this is a message from IED 2)
DIRECT INPUT 6 DEVICE ID: "2"
DIRECT INPUT 6 BIT NUMBER: "4" (effectively, this is a message from IED 3)

UR IED 3:

DIRECT OUT 2 OPERAND: "HYB POTT TX1"
DIRECT INPUT 5 DEVICE ID: "2"
DIRECT INPUT 5 BIT NUMBER: "2" (this is a message from IED 2)
DIRECT INPUT 6 DEVICE ID: "2"
DIRECT INPUT 6 BIT NUMBER: "3" (effectively, this is a message from IED 1)

UR IED 2:

DIRECT INPUT 5 DEVICE ID: "1"
DIRECT INPUT 5 BIT NUMBER: "2"
DIRECT INPUT 6 DEVICE ID: "3"
DIRECT INPUT 6 BIT NUMBER: "2"
DIRECT OUT 2 OPERAND: "HYB POTT TX1"
DIRECT OUT 3 OPERAND: "DIRECT INPUT 5" (forward a message from 1 to 3)
DIRECT OUT 4 OPERAND: "DIRECT INPUT 6" (forward a message from 3 to 1)

The figure shows the signal flow among the three IEDs.

Figure 5-135: Signal flow for direct input and output

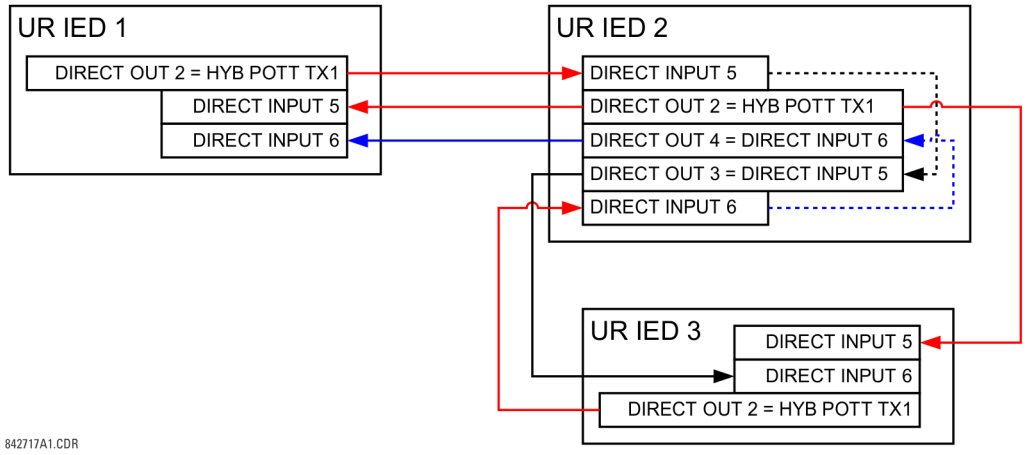

In three-terminal applications, both the remote terminals must grant permission to trip. Therefore, at each terminal, direct inputs 5 and 6 are ANDed in FlexLogic and the resulting operand configured as the permission to trip (**HYB POTT RX1** setting).

5.9.7 Teleprotection

5.9.7.1 Overview

The relay provides 16 teleprotection inputs on communications channel 1 (numbered 1-1 through 1-16) and 16 teleprotection inputs on communications channel 2 (on two-terminals two-channel and three-terminal systems only, numbered 2-1 through 2-16). The remote relay connected to channels 1 and 2 of the local relay is programmed by assigning FlexLogic operands to be sent via the selected communications channel. This allows the user to create distributed protection and control schemes via dedicated communications channels. Some examples are directional comparison pilot schemes and direct transfer tripping. Note that failures of communications channels affect teleprotection functionality. The teleprotection function must be enabled to utilize the inputs.

5.9.7.2 Teleprotection inputs

SETTINGS ⇨⇩ INPUTS/OUTPUTS ⇨⇩ TELEPROTECTION ⇨ TELEPROT INPUTS

■ **TELEPROT INPUTS** ■	⇔	**TELEPROT INPUT 1-1** **DEFAULT: Off** ⇩	Range: Off, On, Latest/Off, Latest/On

⇕	**TELEPROT INPUT 1-16 DEFAULT: Off**	Range: Off, On, Latest/Off, Latest/On
⇕	**TELEPROT INPUT 2-1 DEFAULT: Off**	Range: Off, On, Latest/Off, Latest/On
	⇩	
⇧	**TELEPROT INPUT 2-16 DEFAULT: Off**	Range: Off, On, Latest/Off, Latest/On

Setting the **TELEPROT INPUT ~~ DEFAULT** setting to "On" defaults the input to logic 1 when the channel fails. A value of "Off" defaults the input to logic 0 when the channel fails.

The "Latest/On" and "Latest/Off" values freeze the input in case of lost communications. If the latest state is not known, such as after relay power-up but before the first communication exchange, then the input defaults to logic 1 for "Latest/On" and logic 0 for "Latest/Off."

5.9.7.3 Teleprotection outputs

SETTINGS ⇨⇩ INPUTS/OUTPUTS ⇨⇩ TELEPROTECTION ⇨⇩ TELEPROT OUTPUTS

■ **TELEPROT OUTPUTS** ■	⇔	**TELEPROT OUTPUT 1-1: Off**	Range: FlexLogic operand
		⇩	
	⇕	**TELEPROT OUTPUT 1-16: Off**	Range: FlexLogic operand
	⇕	**TELEPROT OUTPUT 2-1: Off**	Range: FlexLogic operand
		⇩	
	⇧	**TELEPROT OUTPUT 2-16: Off**	Range: FlexLogic operand

As the following figure demonstrates, processing of the teleprotection inputs/outputs is dependent on the number of communication channels and terminals. On two-terminal two-channel systems, they are processed continuously on each channel and mapped separately per channel. Therefore, to achieve redundancy, the user must assign the same operand on both channels (teleprotection outputs at the sending end or corresponding teleprotection inputs at the receiving end). On three-terminal two-channel systems, redundancy is achieved by programming signal re-transmittal in the case of channel failure between any pair of relays.

Figure 5-136: Teleprotection input/output processing

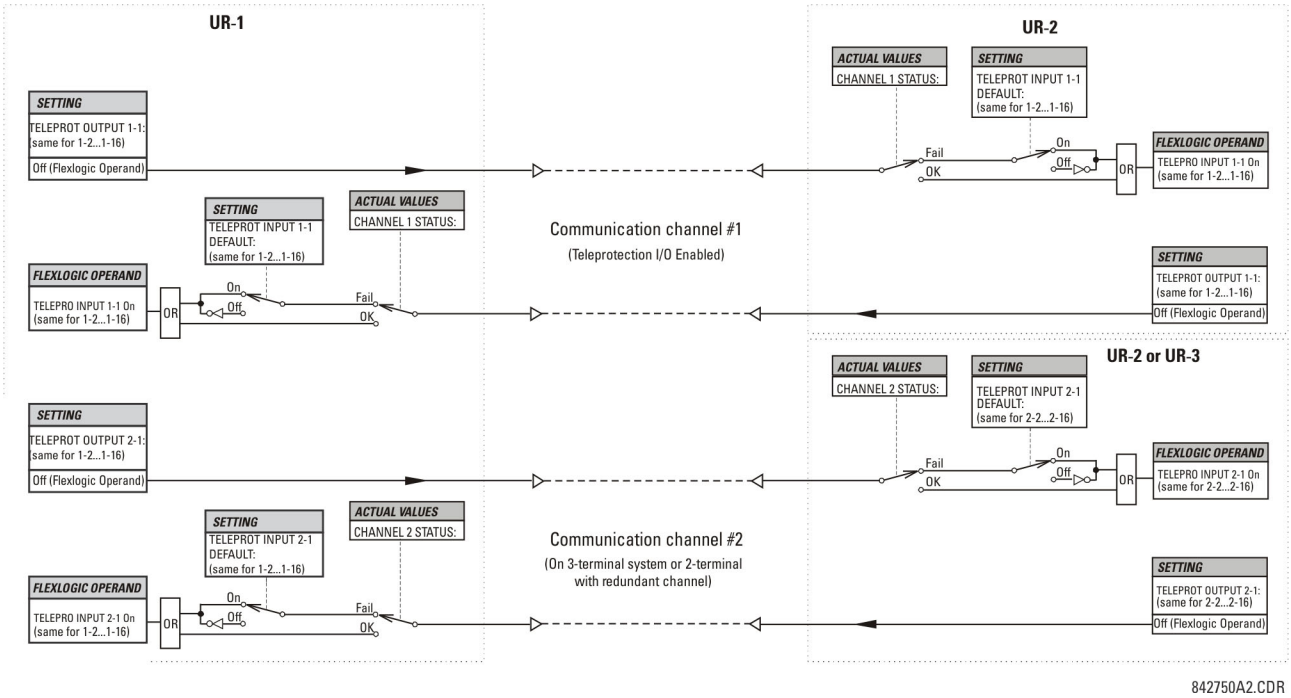

5.10 Transducer inputs/outputs

5.10.1 DCmA inputs

SETTINGS ⇨⇩ TRANSDUCER I/O ⇨⇩ DCMA INPUTS ⇨ DCMA INPUT H1(U8)

■ DCMA INPUT H1 ■	⇔	DCMA INPUT H1 FUNCTION: Disabled	Range: Disabled, Enabled
	⇩	DCMA INPUT H1 ID: DCMA Ip 1	Range: up to 20 alphanumeric characters
	⇩	DCMA INPUT H1 UNITS: µA	Range: six alphanumeric characters
	⇩	DCMA INPUT H1 RANGE: 0 to -1 mA	Range: 0 to –1 mA, 0 to +1 mA, –1 to +1 mA, 0 to 5 mA, 0 to 10mA, 0 to 20 mA, 4 to 20 m
	⇩	DCMA INPUT H1 MIN VALUE: 0.000	Range: –9999.999 to +9999.999 in steps of 0.001
	⇩	DCMA INPUT H1 MAX VALUE: 0.000	Range: –9999.999 to +9999.999 in steps of 0.001

SOFTWARE OPTION

The B30 is provided with optional DCmA capability. This feature is specified as an option at the time of ordering. See the Order Codes section in chapter 2 for details.

Hardware and software are provided to receive signals from external transducers and to convert these signals into a digital format for use as required. The relay accepts inputs in the range of –1 to +20 mA DC, suitable for use with most common transducer output ranges; all inputs are assumed to be linear over the complete range. Hardware details are contained in chapter 3.

Before the DCmA input signal can be used, the value of the signal measured by the relay must be converted to the range and quantity of the external transducer primary input parameter, such as DC voltage or temperature. The relay simplifies this process by internally scaling the output from the external transducer and displaying the actual primary parameter.

DCmA input channels are arranged in a manner similar to CT and VT channels. Configure the individual channels with the settings shown here.

The channels are arranged in sub-modules of two channels, numbered from 1 through 8 from top to bottom. On power-up, the relay automatically generates configuration settings for every channel, based on the order code, in the same general manner that is used for CTs and VTs. Each channel is assigned a slot letter followed by the row number, 1 through 8 inclusive, which is used as the channel number. The relay generates an actual value for each available input channel.

Settings are generated automatically for every channel available in the specific relay as shown above for the first channel of a type 5F transducer module installed in slot H.

The function of the channel can be "Enabled" or "Disabled." If "Disabled," no actual values are created for the channel. An alphanumeric "ID" is assigned to each channel; this ID is included in the channel actual value, along with the programmed units associated with the parameter measured by the transducer, such as volts, °C, megawatts, and so on. This ID is also used to reference the channel as the input parameter to features designed to measure this type of parameter. The **DCMA INPUT H1 RANGE** setting specifies the mA DC range of the transducer connected to the input channel.

The **DCMA INPUT H1 MIN VALUE** and **DCMA INPUT H1 MAX VALUE** settings are used to program the span of the transducer in primary units. For example, a temperature transducer might have a span from 0 to 250 °C; in this case the **DCMA INPUT H1 MIN VALUE** value is "0" and the **DCMA INPUT H1 MAX VALUE** value is "250." Another example is a watts transducer with a span from –20 to +180 MW; in this case the **DCMA INPUT H1 MIN VALUE** value is "–20" and the **DCMA INPUT H1 MAX VALUE** value is "180." Intermediate values between the minimum and maximum values are scaled linearly.

5

5.10.2 RTD inputs

SETTINGS ⇨⇩ TRANSDUCER I/O ⇨⇩ RTD INPUTS ⇨ RTD INPUT H1(U8)

■ **RTD INPUT H1** ■	⇔	**RTD INPUT H1** **FUNCTION: Disabled**	Range: Disabled, Enabled
	⇩	**RTD INPUT H1 ID:** **RTD Ip 1**	Range: up to 20 alphanumeric characters
	⇧	**RTD INPUT H1 TYPE:** **100Ω Platinum**	Range: 100Ω Nickel, 10Ω Copper, 100Ω Platinum, 120Ω Nickel

Hardware and software is provided to receive signals from external resistance temperature detectors and convert these signals into a digital format for use as required. These channels are intended to be connected to any of the RTD types in common use. Specific hardware details are contained in chapter 3.

RTD input channels are arranged in a manner similar to CT and VT channels. The user configures individual channels with the settings shown here.

The channels are arranged in sub-modules of two channels, numbered from 1 through 8 from top to bottom. On power-up, the relay automatically generates configuration settings for every channel, based on the order code, in the same general manner that is used for CTs and VTs. Each channel is assigned a slot letter followed by the row number, 1 through 8 inclusive, which is used as the channel number. The relay generates an actual value for each available input channel.

Settings are automatically generated for every channel available in the specific relay as shown above for the first channel of a type 5C transducer module installed in the first available slot.

The function of the channel can be either "Enabled" or "Disabled." If "Disabled," there is not an actual value created for the channel. An alphanumeric ID is assigned to the channel; this ID is included in the channel actual values. It is also used to reference the channel as the input parameter to features designed to measure this type of parameter. Selecting the type of RTD connected to the channel configures the channel.

Actions based on RTD overtemperature, such as trips or alarms, are done in conjunction with the FlexElements feature. In FlexElements, the operate level is scaled to a base of 100°C. For example, a trip level of 150°C is achieved by setting the operate level at 1.5 pu. FlexElement operands are available to FlexLogic for further interlocking or to operate an output contact directly.

See the following table for reference temperature values for each RTD type.

Table 5-33: RTD temperature vs. resistance

Temperature		Resistance (in ohms)			
°C	°F	100 Ω Pt (DIN 43760)	120 Ω Ni	100 Ω Ni	10 Ω Cu
–50	–58	80.31	86.17	71.81	7.10
–40	–40	84.27	92.76	77.30	7.49
–30	–22	88.22	99.41	82.84	7.88
–20	–4	92.16	106.15	88.45	8.26
–10	14	96.09	113.00	94.17	8.65
0	32	100.00	120.00	100.00	9.04
10	50	103.90	127.17	105.97	9.42
20	68	107.79	134.52	112.10	9.81
30	86	111.67	142.06	118.38	10.19
40	104	115.54	149.79	124.82	10.58
50	122	119.39	157.74	131.45	10.97
60	140	123.24	165.90	138.25	11.35
70	158	127.07	174.25	145.20	11.74
80	176	130.89	182.84	152.37	12.12
90	194	134.70	191.64	159.70	12.51
100	212	138.50	200.64	167.20	12.90
110	230	142.29	209.85	174.87	13.28
120	248	146.06	219.29	182.75	13.67
130	266	149.82	228.96	190.80	14.06
140	284	153.58	238.85	199.04	14.44
150	302	157.32	248.95	207.45	14.83
160	320	161.04	259.30	216.08	15.22
170	338	164.76	269.91	224.92	15.61
180	356	168.47	280.77	233.97	16.00
190	374	172.46	291.96	243.30	16.39
200	392	175.84	303.46	252.88	16.78
210	410	179.51	315.31	262.76	17.17
220	428	183.17	327.54	272.94	17.56
230	446	186.82	340.14	283.45	17.95
240	464	190.45	353.14	294.28	18.34
250	482	194.08	366.53	305.44	18.73

5.10.3 DCmA outputs

SETTINGS ⇨⇩ TRANSDUCER I/O ⇨⇩ DCMA OUTPUTS ⇨ DCMA OUTPUT H1(U8)

■ DCMA OUTPUT H1 ■	⇔	DCMA OUTPUT H1 SOURCE: Off	Range: Off, any analog actual value parameter
	⇩	DCMA OUTPUT H1 RANGE: –1 to 1 mA	Range: –1 to 1 mA, 0 to 1 mA, 4 to 20 mA
	⇩	DCMA OUTPUT H1 MIN VAL: 0.000 pu	Range: –90.000 to 90.000 pu in steps of 0.001
	⇧	DCMA OUTPUT H1 MAX VAL: 1.000 pu	Range: –90.000 to 90.000 pu in steps of 0.001

Hardware and software is provided to generate DCmA signals that allow interfacing with external equipment. Hardware details are contained in chapter 3. The DCmA output channels are arranged in a manner similar to transducer input or CT and VT channels. The user configures individual channels with the settings as follows.

The channels are arranged in sub-modules of two channels, numbered 1 through 8 from top to bottom. On power-up, the relay automatically generates configuration settings for every channel, based on the order code, in the same manner used for CTs and VTs. Each channel is assigned a slot letter followed by the row number, 1 through 8 inclusive, which is used as the channel number.

Both the output range and a signal driving a given output are user-programmable via the following settings menu (an example for channel M5 is shown).

The relay checks the driving signal (*x* in equations below) for the minimum and maximum limits, and subsequently re-scales so the limits defined as **MIN VAL** and **MAX VAL** match the output range of the hardware defined as **RANGE**. The following equation is applied:

$$I_{out} = \begin{cases} I_{min} & \text{if } x < \textbf{MIN VAL} \\ I_{max} & \text{if } x > \textbf{MAX VAL} \\ k(x - \textbf{MIN VAL}) + I_{min} & \text{otherwise} \end{cases} \qquad \textbf{Eq. 5-20}$$

where

x is a driving signal specified by the **SOURCE** setting
I_{min} and I_{max} are defined by the **RANGE** setting
k is a scaling constant calculated as:

$$k = \frac{I_{max} - I_{min}}{\textbf{MAX VAL} - \textbf{MIN VAL}} \qquad \textbf{Eq. 5-21}$$

The feature is intentionally inhibited if the **MAX VAL** and **MIN VAL** settings are entered incorrectly, for example when **MAX VAL** – **MIN VAL** < 0.1 pu. The resulting characteristic is illustrated in the following figure.

Figure 5-137: DCmA output characteristic

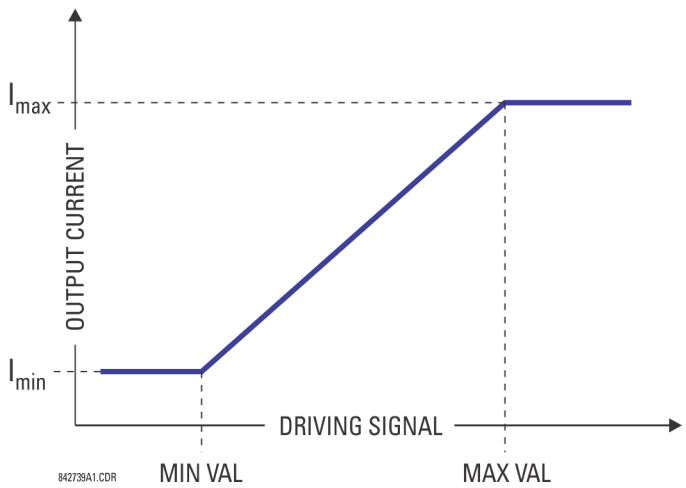

Settings

DCMA OUTPUT H1 SOURCE — This setting specifies an internal analog value to drive the analog output. Actual values (FlexAnalog parameters) such as power, current amplitude, voltage amplitude, power factor, etc. can be configured as sources driving DCmA outputs. See Appendix A for a list of FlexAnalog parameters.

DCMA OUTPUT H1 RANGE — This setting allows selection of the output range. Each DCmA channel can be set independently to work with different ranges. The three most commonly used output ranges are available.

DCMA OUTPUT H1 MIN VAL — This setting allows setting the minimum limit for the signal that drives the output. This setting is used to control the mapping between an internal analog value and the output current. The setting is entered in per-unit values. The base units are defined in the same manner as the FlexElement base units.

DCMA OUTPUT H1 MAX VAL — This setting allows setting the maximum limit for the signal that drives the output. This setting is used to control the mapping between an internal analog value and the output current. The setting is entered in per-unit values. The base units are defined in the same manner as the FlexElement base units.

NOTE

The **DCMA OUTPUT H1 MIN VAL** and **DCMA OUTPUT H1 MAX VAL** settings are ignored for power factor base units (i.e. if the **DCMA OUTPUT H1 SOURCE** is set to FlexAnalog value based on power factor measurement).

Three application examples follow.

Example: Current monitoring

The phase A current (true RMS value) is to be monitored via the H2 current output working with the range from 4 to 20 mA. The CT ratio is 5000:5 and the maximum load current is 4200 A. The current is to be monitored from 0 A upwards, allowing for 50% overload.

The phase current with the 50% overload margin is:

$$I_{max} = 1.5 \times 4.2\ \text{kA} = 6.3\ \text{kA} \qquad \textbf{Eq. 5-22}$$

The base unit for current (see the FlexElements section in this chapter for additional details) is:

$$I_{BASE} = 5\ \text{kA} \qquad \textbf{Eq. 5-23}$$

The minimum and maximum power values to be monitored (in pu) are:

$$\text{minimum current} = \frac{0\ \text{kA}}{5\ \text{kA}} = 0\ \text{pu}, \quad \text{maximum current} = \frac{6.3\ \text{kA}}{5\ \text{kA}} = 1.26\ \text{pu} \qquad \textbf{Eq. 5-24}$$

The following settings are entered:

DCMA OUTPUT H2 SOURCE: "SRC 1 Ia RMS"
DCMA OUTPUT H2 RANGE: "4 to 20 mA"
DCMA OUTPUT H2 MIN VAL: "0.000 pu"
DCMA OUTPUT H2 MAX VAL: "1.260 pu"

The worst-case error for this application can be calculated by superimposing the following two sources of error:

- ±0.5% of the full scale for the analog output module, or ±0.005 x (20 - 4) x 6.3 kA = ±0.504 kA
- ±0.25% of reading or ±0.1% of rated (whichever is greater) for currents between 0.1 and 2.0 of nominal

For example, at the reading of 4.2 kA, the worst-case error is max(0.0025 × 4.2 kA, 0.001 × 5 kA) + 0.504 kA = 0.515 kA.

Example: Voltage monitoring

A positive-sequence voltage on a 400 kV system measured via source 2 is to be monitored by the DCmA H3 output with a range of 0 to 1 mA. The VT secondary setting is 66.4 V, the VT ratio setting is 6024, and the VT connection setting is "Delta." The voltage is to be monitored in the range from 70% to 110% of nominal.

The minimum and maximum positive-sequence voltages to be monitored are:

$$V_{min} = 0.7 \times \frac{400\ \text{kV}}{\sqrt{3}} = 161.66\ \text{kV}, \quad V_{max} = 1.1 \times \frac{400\ \text{kV}}{\sqrt{3}} = 254.03\ \text{kV} \qquad \textbf{Eq. 5-25}$$

The base unit for voltage (see the FlexElements section in this chapter for additional details) is:

$$V_{BASE} = 0.0664\ \text{kV} \times 6024 = 400\ \text{kV} \qquad \textbf{Eq. 5-26}$$

The minimum and maximum voltage values to be monitored (in pu) are:

$$\text{minimum voltage} = \frac{161.66\ \text{kV}}{400\ \text{kV}} = 0.404\ \text{pu}, \quad \text{maximum voltage} = \frac{254.03\ \text{kV}}{400\ \text{kV}} = 0.635\ \text{pu} \qquad \textbf{Eq. 5-27}$$

The following settings are entered:

DCMA OUTPUT H3 SOURCE: "SRC 2 V_1 mag"
DCMA OUTPUT H3 RANGE: "0 to 1 mA"
DCMA OUTPUT H3 MIN VAL: "0.404 pu"
DCMA OUTPUT H3 MAX VAL: "0.635 pu"

The limit settings differ from the expected 0.7 pu and 1.1 pu because the relay calculates the positive-sequence quantities scaled to the phase-to-ground voltages, even if the VTs are connected in "Delta" (see the Metering Conventions section in chapter 6), while at the same time the VT nominal voltage is 1 pu for the settings. Consequently the settings required in this example differ from naturally expected by the factor of $\sqrt{3}$.

The worst-case error for this application could be calculated by superimposing the following two sources of error:

- ±0.5% of the full scale for the analog output module, or ± 0.005 x (1-0) x 254.03 kV = ±1.27 kV
- ±0.5% of reading

For example, under nominal conditions, the positive-sequence reads 230.94 kV and the worst-case error is 0.005 × 230.94 kV + 1.27 kV = 2.42 kV.

5.11 Testing

5

5.11.1 Test mode function

SETTINGS ⇨⇩ TESTING ⇨ TEST MODE FUNCTION

■ **TESTING** ■	⇔	**TEST MODE FUNCTION: Disabled**	Range: Disabled, Test-Blocked, Test

The B30 provides a test facility to verify the functionality of contact inputs and outputs, some communication functions and the phasor measurement unit (where applicable), using simulated conditions. It is accessible in the software.

The test mode can be in any of three states: Disabled, Test-Blocked, or Test.

The Disabled mode is intended for normal in service operation; relay protection, control and communication function is normal. Test features are disabled, except channel tests and phasor measurement unit tests remain usable when provided.

The Test-Blocked mode is intended to allow the relay to be quickly placed in a state where the relay cannot negatively impact the power system or other parts of the substation automation system. This is to allow changing settings, loading new firmware, changing hardware modules, and changing communication connections. As far as practical all relay output signals are blocked. Contact outputs are de-energized, latching outputs are frozen. Commands to HardFiber Bricks are blocked. GOOSE transmissions have their "simulation" flag (also known as "test" flag) set, which results in the messages not being accepted by compliant receiving devices that do not have a "Sim" data attribute set. The quality attribute of values that can be output via IEC 61850 MMS services are set to "invalid," which results in the values not being used for operational purposes by compliant receiving devices. Direct I/O channel tests and PMU tests are usable on applicable models.

The Test mode is intended for testing involving forcing relay operation by test signal injection and verifying correct relay output. This mode is also for tests to verify the relay outputs (both contact and communications) have the intended impact on specific power system devices or on specific other substation automation devices. Contact outputs can be selectively enabled or forced as described in the following two sections. Shared outputs to Bricks have their test mode flag raised, which results in their value only being accepted by relays also in forcible/test mode. GOOSE transmissions have the "simulation" flag set, which results in these only being accepted by other devices that have their "Sim" data attribute set.

The "Sim" data attribute in the relay is set, so that if GOOSE messages are received with the "simulation" flag set, these are used in place of the normal messages. The quality attribute of values that are output via IEC 61850 MMS services are set to "valid" + "test," which signals that the values are not to be used for operational purposes.

Otherwise, the UR remains fully operational while in Test mode, allowing for various testing procedures. In particular, the protection and control elements, and FlexLogic function normally. Other than the IEC 61850 protocol, communications based inputs and outputs remain fully operational. The test procedure must take this into account. Direct I/O channel tests and PMU tests are usable on applicable models.

The test mode can be selected either through the front panel, through EnerVista UR Setup, or through IEC 61850 control to LLN0.Mod. LLN0.Mod.ctlVal "on" selects Disabled, "test/blocked" selects Test-Blocked, and "test" selects Test. The **TEST MODE FUNCTION** setting can only be changed by a direct user command. Following a restart, power up, settings upload, or firmware upgrade, the test mode remains at the last programmed value. This allows a UR that has been placed in test-block mode to remain isolated during testing and maintenance activities.

5.11.2 Test mode forcing

SETTINGS ⇨⇩ TESTING ⇨ TEST MODE FORCING

■ **TESTING** ■	⇔	**TEST MODE FORCING:** **On**	Range: FlexLogic operand

When in Test mode, the operand selected by the **TEST MODE FORCING** setting dictates further response of the B30 to testing conditions, as described in the following two sections.

The test mode state is indicated on the relay faceplate by a combination of the Test Mode LED indicator, the In-Service LED indicator, and by the critical fail relay, as shown in the following table.

Table 5-34: Test mode operation

TEST MODE FUNCTION	In-service LED	Test mode LED	Critical fail relay	TEST MODE FORCING	Contact input and output behavior
Disabled	Unaffected	Off	Normal	No effect	Normal
Test-Blocked	Off	On	De-energized	No effect	Contact outputs disabled
Test	Off	Flashing	De-energized	Off	Normal
				On	Controlled by forcing features

NOTE

On restart, the **TEST MODE FORCING** setting and the force contact input and force contact output settings revert to their default states.

5.11.3 Force contact inputs

SETTINGS ⇨⇩ TESTING ⇨⇩ FORCE CONTACT INPUTS

■ **FORCE CONTACT** ■ **INPUTS**	⇔	**FORCE Cont Ip 1** **: Normal**	Range: Normal, Open, Closed
	⇩	**FORCE Cont Ip 2** **: Normal**	Range: Normal, Open, Closed
	⇩		
	⇧	**FORCE Cont Ip xx** **: Normal**	Range: Normal, Open, Closed

The force contact inputs feature provides a method of performing checks on the function of all contact inputs.

While in Test mode, the relay contact inputs can be pre-programmed to respond in the following ways:

- If set to "Normal," the input remains fully operational. It is controlled by the voltage across its input terminals and can be turned on and off by external circuitry. Select this value if a given input must be operational during the test. This includes, for example, an input initiating the test, or being a part of a user pre-programmed test sequence.
- If set to "Open," the input is forced to report as opened (Logic 0) while the operand selected by **TEST MODE FORCING** setting is On, regardless of the voltage across the input terminals. While the selected operand is Off, the input behaves as it does when in service.
- If set to "Closed," the input is forced to report as closed (Logic 1) while the operand selected by **TEST MODE FORCING** setting is On regardless of the voltage across the input terminals. While the selected operand is Off, the input behaves as it does when in service.

NOTE

On restart, the **TEST MODE FORCING** setting and the force contact input and force contact output settings revert to their default states.

5.11.4 Force contact outputs

SETTINGS ⇨⇩ TESTING ⇨⇩ FORCE CONTACT OUTPUTS

■ FORCE CONTACT ■ OUTPUTS	⇔	FORCE Cont Op 1 : Normal	Range: Normal, Energized, De-energized, Freeze
	⇩	FORCE Cont Op 2 : Normal	Range: Normal, Energized, De-energized, Freeze
	⇩		
	⇧	FORCE Cont Op xx : Normal	Range: Normal, Energized, De-energized, Freeze

The force contact outputs feature provides a method of performing checks on the function of all contact outputs.

While in Test mode, the relay contact outputs can be pre-programmed to respond in the following ways:

- If set to "Normal," the contact output remains fully operational. It operates when its control operand is logic 1 and resets when its control operand is logic 0.
- If set to "Energized," the output closes and remains closed while the operand selected by the **TEST MODE FORCING** setting is On, regardless of the status of the operand configured to control the output contact. While the selected operand is Off, the output behaves as it does when in service.
- If set to "De-energized," the output opens and remains opened while the operand selected by the **TEST MODE FORCING** setting is On, regardless of the status of the operand configured to control the output contact. While the selected operand is Off, the output behaves as it does when in service.
- If set to "Freeze," the output retains its position at the instant before the **TEST MODE FUNCTION** was Test and the operand selected by the **TEST MODE FORCING** setting was On, regardless of later changes in the status of the operand configured to control the output contact. While the selected operand is Off, the output behaves as it does when in service.

NOTE

On restart, the **TEST MODE FORCING** setting and the force contact input and force contact output settings revert to their default states.

B30 Bus Differential System

Chapter 6: Actual values

This chapter outlines viewing of data on the front panel and in the software.

6.1 Actual Values menu

■■ ACTUAL VALUES ■■ FRONT PANEL	⇔	■ ■	Access in EnerVista See page 6-3
⇩			
■■ ACTUAL VALUES ■■ STATUS	⇔	■ CONTACT INPUTS ■	See page 6-4
⇩	⇕	■ VIRTUAL INPUTS ■	See page 6-4
	⇕	■ RxGOOSE BOOLEANS ■	See page 6-4
	⇕	■ RxGOOSE DPS ■	See page 6-4
	⇕	■ TELEPROTECTION ■ INPUTS	See page 6-5
	⇕	■ CONTACT OUTPUTS ■	See page 6-5
	⇕	■ VIRTUAL OUTPUTS ■	See page 6-5
	⇕	■ RxGOOSE ■ STATUS	See page 6-6
	⇕	■ RxGOOSE ■ STATISTICS	See page 6-6
	⇕	■ DIGITAL COUNTERS ■	See page 6-6
	⇕	■ SELECTOR SWITCHES ■	See page 6-7

	⇕	■ FLEX STATES ■	See page 6-7
	⇕	■ ETHERNET ■	See page 6-7
	⇕	■ REAL TIME CLOCK ■ SYNCHRONIZING	See page 6-7
	⇕	■ DIRECT INPUTS ■	See page 6-8
	⇕	■ DIRECT DEVICES ■ STATUS	See page 6-9
	⇕	■ EGD PROTOCOL ■ STATUS	See page 6-9
	⇕	■ TELEPROT CH TESTS ■	See page 6-9
	⇕	■ COMM STATUS ■ REMAINING CONNECT	See page 6-10
	⇕	■ PRP STATUS ■	See page 6-10
⇧	⇧	■ R-TxGOOSE STATUS ■	See page 6-11
■■ ACTUAL VALUES ■■ METERING	⇔	■ BUS ■	See page 6-16
⇩	⇕	■ SOURCE SRC 1 ■	See page 6-16
	⇕	■ SOURCE SRC 2 ■	
	⇕	■ SOURCE SRC 3 ■	
	⇕	■ SOURCE SRC 4 ■	
	⇕	■ SOURCE SRC 5 ■	
	⇕	■ SOURCE SRC 6 ■	
	⇕	■ TRACKING FREQUENCY ■	See page 6-21
	⇕	■ FLEXELEMENTS ■	See page 6-21
	⇕	■ RxGOOSE ■ Analogs	See page 6-22
	⇕	■ TRANSDUCER I/O ■ DCMA INPUTS	See page 6-22
⇧	⇧	■ TRANSDUCER I/O ■ RTD INPUTS	See page 6-22
■■ ACTUAL VALUES ■■ RECORDS	⇔	■ USER PROGRAMMABLE ■ FAULT REPORTS	See page 6-22
⇩	⇕	■ EVENT RECORDS ■	See page 6-23

	⇕	■ OSCILLOGRAPHY ■	See page 6-24
	⇕	■ DATA LOGGER ■	See page 6-24
⇧	⇧	■ MAINTENANCE ■	See page 6-24
■■ ACTUAL VALUES ■■ PRODUCT INFO	⇔	■ MODEL INFORMATION ■	See page 6-25
	⇧	■ FIRMWARE REVISIONS ■	See page 6-26

For status reporting, 'On' represents Logic 1 and 'Off' represents Logic 0.

6.2 Front panel

The front panel can be viewed and used in the EnerVista software, for example to view an error message displayed on the front panel.

To view the front panel in EnerVista software:

1. Click **Actual Values > Front Panel**.

Figure 6-1: Front panel use in the software (C60 shown)

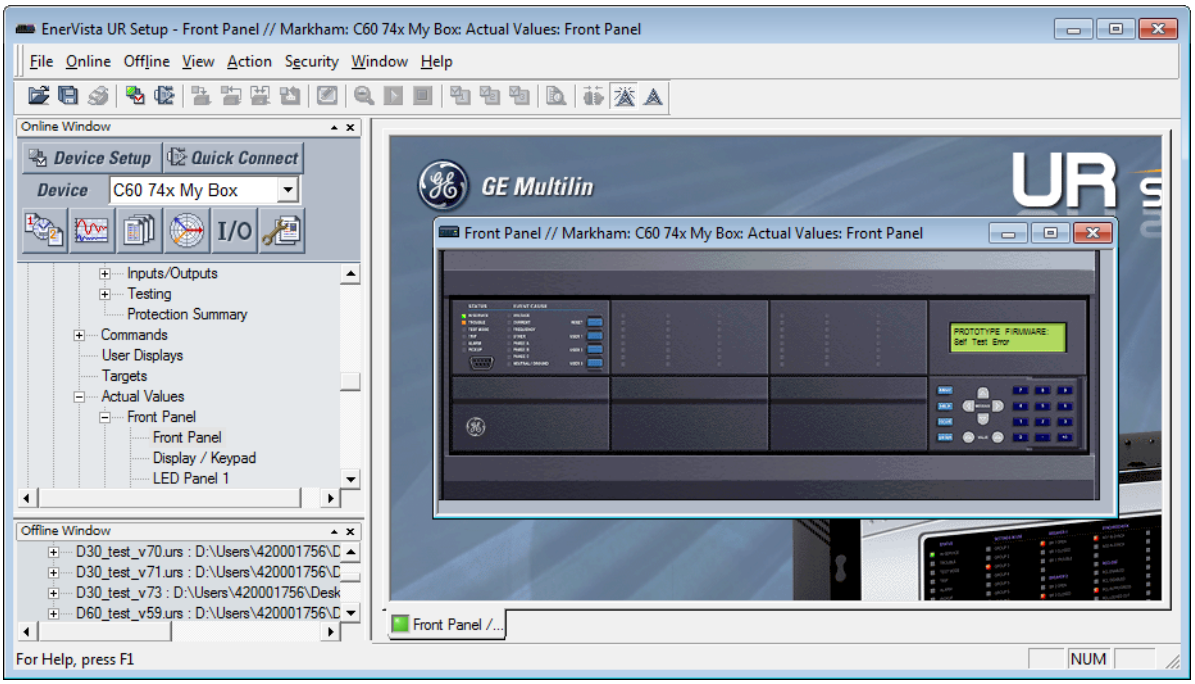

6

6.3 Status

6.3.1 Contact inputs

ACTUAL VALUES ⇨ STATUS ⇨ CONTACT INPUTS

■ CONTACT INPUTS ■	⇔	Cont Ip 1 Off	Range: On, Off
		⇩	
	⇧	Cont Ip xx Off	Range: On, Off

The present status of the contact inputs is shown here. The first line of a message display indicates the ID of the contact input. For example, 'Cont Ip 1' refers to the contact input in terms of the default name-array index. The second line of the display indicates the logic state of the contact input.

6.3.2 Virtual inputs

ACTUAL VALUES ⇨ STATUS ⇨⇩ VIRTUAL INPUTS

■ VIRTUAL INPUTS ■	⇔	Virt Ip 1 Off	Range: On, Off
		⇩	
	⇧	Virt Ip 64 Off	Range: On, Off

The present status of the 64 virtual inputs is shown here. The first line of a message display indicates the ID of the virtual input. For example, 'Virt Ip 1' refers to the virtual input in terms of the default name. The second line of the display indicates the logic state of the virtual input.

6

6.3.3 RxGOOSE boolean inputs

ACTUAL VALUES ⇨ STATUS ⇨⇩ RxGOOSE BOOLEANS

■ RxGOOSE BOOLEANS ■	⇔	RxGOOSE BOOLEAN 1 STATUS: Off	Range: On, Off
		⇩	
	⇧	RxGOOSE BOOLEAN 256 STATUS: Off	Range: On, Off

SOFTWARE OPTION

The B30 is provided with optional IEC 61850 capability. This feature is specified as a software option at the time of ordering. See the Order Codes section of chapter 2 for details.

6.3.4 RxGOOSE DPS inputs

ACTUAL VALUES ⇨ STATUS ⇨⇩ RxGOOSE DPS

■ RxGOOSE DPS ■	⇔	RxGOOSE DPS 1 Status: Intermediate	Range: On, Off, Intermediate, Bad
		⇩	
	⇧	RxGOOSE DPS 16 Status: Intermediate	Range: On, Off, Intermediate, Bad

The B30 is provided with optional IEC 61850 capability. This feature is specified as a software option at the time of ordering. See the Order Codes section of chapter 2 for details.

6.3.5 Teleprotection inputs

ACTUAL VALUES ⇨ STATUS ⇨⇩ TELEPROTECTION INPUTS

■ TELEPROTECTION ■ INPUTS	⇔	TELEPROTECTION INPUT 1-1: Off	Range: On, Off
		⇩	
	⇕	TELEPROTECTION INPUT 1-16: Off	Range: On, Off
	⇕	TELEPROTECTION INPUT 2-1: Off	Range: On, Off
		⇩	
	⇧	TELEPROTECTION INPUT 2-16: Off	Range: On, Off

The present state of teleprotection inputs from communication channels 1 and 2 are shown here. The state displayed is that of corresponding remote output unless the channel is declared failed.

6.3.6 Contact outputs

ACTUAL VALUES ⇨ STATUS ⇨⇩ CONTACT OUTPUTS

■ CONTACT OUTPUTS ■	⇔	Cont Op 1 Off	Range: On, Off, VOff, VOn, IOn, IOff
		⇩	
	⇧	Cont Op xx Off	Range: On, Off, VOff, VOn, IOn, IOff

The present state of the contact outputs is shown here. The first line of a message display indicates the ID of the contact output. For example, 'Cont Op 1' refers to the contact output in terms of the default name-array index. The second line of the display indicates the logic state of the contact output.

For form-A contact outputs, the state of the voltage and current detectors is displayed as Off, VOff, IOff, On, IOn, and VOn. For form-C contact outputs, the state is displayed as Off or On.

6.3.7 Virtual outputs

ACTUAL VALUES ⇨ STATUS ⇨⇩ VIRTUAL OUTPUTS

■ VIRTUAL OUTPUTS ■	⇔	Virt Op 1 Off	Range: On, Off
		⇩	
	⇧	Virt Op 96 Off	Range: On, Off

The present state of up to 96 virtual outputs is shown here. The first line of a message display indicates the ID of the virtual output. For example, 'Virt Op 1' refers to the virtual output in terms of the default name-array index. The second line of the display indicates the logic state of the virtual output, as calculated by the FlexLogic equation for that output.

6.3.8 RxGOOSE status

ACTUAL VALUES ⇨ STATUS ⇨⇩ RxGOOSE STATUS

■ RxGOOSE ■ STATUS	⇔	All RxGOOSE Online: Yes	Range: Yes, No
	⇩	RxGOOSE 1 Status: Offline	Range: Online, Offline
	⇩		
	⇧	RxGOOSE 64 Status: Offline	Range: Online, Offline

SOFTWARE OPTION

The B30 is provided with optional IEC 61850 capability. This feature is specified as a software option at the time of ordering. See the Order Codes section of chapter 2 for details.

The **All RxGOOSE Online** actual value does not consider RxGOOSE that are not configured or are not used by any RxGOOSE Input.

6.3.9 RxGOOSE statistics

ACTUAL VALUES ⇨ STATUS ⇨⇩ RxGOOSE STATISTICS ⇨⇩ RxGOOSE 1(64)

■ RxGOOSE 1 ■	⇔	RxGOOSE 1 stNum: 0	Range: 0 up to 4,294,967,295
	⇧	RxGOOSE 1 sqNum: 0	Range: 0 up to 4,294,967,295

SOFTWARE OPTION

The B30 is provided with optional IEC 61850 capability. This feature is specified as a software option at the time of ordering. See the Order Codes section of chapter 2 for details.

stNum — State number. The most recently received value in GOOSE message field stNum. The publisher increments stNum each time that the state of one or more of the GOOSE message members is sent with a revised value.

sqNum — Sequence number. The most recently received value in GOOSE message field sqNum. The publisher sets sqNum to zero each time the state of one or more of the GOOSE message members is sent with a new value, and it increments it whenever a GOOSE message is resent without any member value change.

6.3.10 Digital counters

ACTUAL VALUES ⇨ STATUS ⇨⇩ DIGITAL COUNTERS ⇨ DIGITAL COUNTERS Counter 1(8)

■ DIGITAL COUNTERS ■ Counter 1	⇔	Counter 1 ACCUM: 0	
	⇩	Counter 1 FROZEN: 0	
	⇩	Counter 1 FROZEN: 1970/01/01 00:00:00	Range: YYYY/MM/DD HH:MM:SS
	⇧	Counter 1 MICROS: 0	Range: 0 to 4294967295 in steps of 1

The present status of the eight digital counters displays here. The status of each counter, with the user-defined counter name, includes the accumulated and frozen counts (the count units label also appears). Also included, is the date and time stamp for the frozen count. The **COUNTER 1 MICROS** value refers to the microsecond portion of the time stamp.

6.3.11 Selector switches

ACTUAL VALUES ⇨ STATUS ⇨⇩ SELECTOR SWITCHES

■ SELECTOR SWITCHES ■	⇔	SELECTOR SWITCH 1 POSITION: 0/7	Range: Current Position / 7
	⇧	SELECTOR SWITCH 2 POSITION: 0/7	Range: Current Position / 7

The display shows both the current position and the full range. The current position only (an integer from 0 through 7) is the actual value.

6.3.12 Flex States

ACTUAL VALUES ⇨ STATUS ⇨⇩ FLEX STATES

■ FLEX STATES ■	⇔	PARAM 1: Off Off	Range: On, Off
		⇩	
	⇧	PARAM 256: Off Off	Range: On, Off

There are 256 FlexState™ bits available. The second line value indicates the state of the given FlexState bit.

6.3.13 Ethernet

ACTUAL VALUES ⇨ STATUS ⇨⇩ ETHERNET

■ ETHERNET ■	⇔	ETHERNET PRI LINK STATUS: Fail	Range: Fail, OK
	⇩	ETHERNET SEC LINK STATUS: Fail	Range: Fail, OK
	⇧	ETHERNET TER LINK STATUS: Fail	Range: Fail, OK

These values indicate the status of the first, second, and third Ethernet links.

6.3.14 Real time clock synchronizing

ACTUAL VALUES ⇨ STATUS ⇨⇩ REAL TIME CLOCK SYNCHRONIZING

■ REAL TIME CLOCK ■ SYNCHRONIZING	⇔	RTC SYNC SOURCE: None	Range: see below
	⇩	GRANDMASTER ID: 0X0000000000000000	Range: any 8 octet value
	⇩	ACCURACY: 999999999 ns	Range: 0 to 999,999,999 ns
	⇩	PORT 1 PTP STATE: No Signal	Range: Disabled, No Signal, Calibrating, Synch'd (No Pdelay), Synchronized
	⇩	PORT 2 PTP STATE: No Signal	Range: Disabled, No Signal, Calibrating, Synch'd (No Pdelay), Synchronized
	⇩	PORT 3 PTP STATE: No Signal	Range: Disabled, No Signal, Calibrating, Synch'd (No Pdelay), Synchronized
	⇧	PTP - IRIG-B DELTA: 500000000 ns	Range: -500,000,000 to +500,000,000 ns

This item displays when the product includes an IEEE 1588 software option.

RTC SYNC SOURCE actual value is the time synchronizing source the relay is using at present. Possible sources are: Port 1 PTP Clock, Port 2 PTP Clock, Port 3 PTP Clock, IRIG-B, Other, and None, where "Other" means any less precise source (SNTP, IEC 103, IEC 104, or DNP). An actual value displays when the relay includes the IEEE 1588 software option.

The **GRANDMASTER ID** is the grandmasterIdentity code being received from the present PTP grandmaster, if any. When the relay is not using any PTP grandmaster, this actual value is zero. The grandmasterIdentity code is specified by PTP to be globally unique, so one can always know which clock is grandmaster in a system with multiple grandmaster-capable clocks.

ACCURACY is the estimated maximum time error at present in the RTC, considering the quality information imbedded in the received time signal. The value 999,999,999 indicates that the magnitude of the estimated error is one second or more, or that the error cannot be estimated.

PORT 1...3 PTP STATE is the present state of the port's PTP clock. The PTP clock state is:

- **Disabled** is the port's function setting is Disabled
- **No Signal** if enabled but no signal from an active master has been found and selected
- **Calibrating** if an active master has been selected but lock is not at present established
- **Synch'd (No Pdelay)** if the port is synchronized, but the peer delay mechanism is non-operational
- **Synchronized** if synchronized

PTP - IRIG-B DELTA is the time difference, measured in nanoseconds, between the fractional seconds portion of the time being received via PTP and that being received via IRIG-B. A positive value indicates that PTP time is fast compared to IRIG-B time.

6.3.15 Direct inputs

ACTUAL VALUES ⇨ STATUS ⇨⇩ DIRECT INPUTS

```
■ DIRECT INPUTS
■
```

⇔

```
AVERAGE MSG RETURN
TIME CH1: 0 ms
```

⇕

```
UNRETURNED MSG
COUNT CH1:   0
```

⇕

```
CRC FAIL COUNT
CH1:   0
```

⇕

```
AVERAGE MSG RETURN
TIME CH2: 0 ms
```

⇕

```
UNRETURNED MSG
COUNT CH2:   0
```

⇕

```
CRC FAIL COUNT
CH2:   0
```

⇕

```
DIRECT INPUT  1:
On
```

⇩

⇧

```
DIRECT INPUT 32:
On
```

The **AVERAGE MSG RETURN TIME** is the time taken for direct output messages to return to the sender in a direct input/output ring configuration (this value is not applicable for non-ring configurations). This is a rolling average calculated for the last ten messages. There are two return times for dual-channel communications modules.

The **UNRETURNED MSG COUNT** values (one per communications channel) count the direct output messages that do not make the trip around the communications ring. The **CRC FAIL COUNT** values (one per communications channel) count the direct output messages that have been received but fail the CRC check. High values for either of these counts can indicate on a problem with wiring, the communication channel, or one or more relays. The **UNRETURNED MSG COUNT** and **CRC FAIL COUNT** values can be cleared using the **CLEAR DIRECT I/O COUNTERS** command.

The **DIRECT INPUT 1** to **DIRECT INPUT (32)** values represent the state of each direct input.

6.3.16 Direct devices status

ACTUAL VALUES ⇨ STATUS ⇨⇩ DIRECT DEVICES STATUS

■ DIRECT DEVICES ■ STATUS	⇔	DIRECT DEVICE 1 STATUS: Offline	Range: Offline, Online
		⇩	
	⇧	DIRECT DEVICE 16 STATUS: Offline	Range: Offline, Online

These actual values represent the state of direct devices 1 through 16.

6.3.17 EGD protocol status

6.3.17.1 Fast exchange

ACTUAL VALUES ⇨ STATUS ⇨⇩ EGD PROTOCOL STATUS ⇨ PRODUCER STATUS ⇨ FAST EXCHANGE 1

■ FAST EXCHANGE 1 ■	⇔	FAST EXCHANGE 1 SIGNATURE: 0
	⇧	FAST EXCHANGE 1 DATA LENGTH: 0

These values provide information for debugging an Ethernet Global Data (EGD) network. The EGD signature and packet size for the fast EGD exchange display.

6.3.17.2 Slow exchange

ACTUAL VALUES ⇨ STATUS ⇨⇩ EGD PROTOCOL STATUS ⇨ PRODUCER STATUS ⇨ SLOW EXCHANGE 1(2)

■ SLOW EXCHANGE 1 ■	⇔	SLOW EXCHANGE 1 SIGNATURE: 0
	⇧	SLOW EXCHANGE 1 DATA LENGTH: 0

These values provide information for debugging an EGD network. The EGD signature and packet size for the slow EGD exchanges display.

6.3.18 Teleprotection channel tests

ACTUAL VALUES ⇨ STATUS ⇨⇩ TELEPROT CH TESTS

■ TELEPROT CH TESTS ■	⇔	CHANNEL 1 STATUS: n/a	Range: n/a, FAIL, OK
	⇩	CHANNEL 1 LOST PACKETS: 1	Range: 1 to 65535 in steps of 1
	⇩	CHANNEL 2 STATUS: n/a	Range: n/a, FAIL, OK

⇕	CHANNEL 2 LOST PACKETS: 1	Range: 1 to 65535 in steps of 1
⇧	VALIDITY OF CHANNEL CONFIGURATION: FAIL	Range: n/a, FAIL, OK

The status information for two channels is shown here.

CHANNEL 1 STATUS — This represents the receiver status of each channel. If the value is "OK," teleprotection is enabled and data is being received from the remote terminal; If the value is "FAIL," teleprotection enabled and data is not being received from the remote terminal. If "n/a," teleprotection is disabled.

CHANNEL 1 LOST PACKETS — Data is transmitted to the remote terminals in data packets at a rate of two packets per cycle. The number of lost packets represents data packets lost in transmission; this count can be reset to 0 through the **COMMANDS ⇨⇩ CLEAR RECORDS** menu.

VALIDITY OF CHANNEL CONFIGURATION — This value displays the current state of the communications channel identification check, and hence validity. If a remote relay ID does not match the programmed ID at the local relay, the "FAIL" message displays. The "N/A" value appears if the local relay ID is set to a default value of "0," the channel is failed, or if the teleprotection inputs/outputs are not enabled.

6.3.19 Remaining connection status

ACTUAL VALUES ⇨ STATUS ⇨⇩ COMM STATUS REMAINING CONNECT

■ COMM STATUS ■ REMAINING CONNECT	⇔	MMS TCP(max 5) 5	Range: 0 to 5
	⇕	MODBUS TCP (max 4) 4	Range: 0 to 4
	⇕	DNP TCP(max 2) 2	Range: 0 to 2
	⇕	IEC-104 TCP(max 2) 2	Range: 0 to 2
	⇧	SFTP (max 4) 4	Range: 0 to 4

These values specify the remaining number of TCP connections still available for each protocol. The display depends on the options applicable to your device. Each time a connection is used, the remaining number of connections decrements. When released, the remaining number of connections increments. If no connection is made over the specific protocol, the number equals the maximum number available for the specific protocol.

For example, the maximum number of Modbus TCP connections is 4. Once an EnerVista session is opened on a computer connected to the UR over Ethernet, the Modbus TCP status shows 3. If the EnerVista application is closed, the Modbus TCP status shows 4.

MMS TCP — The number of IEC 61850 connections remaining.

6.3.20 Parallel Redundancy Protocol (PRP)

The Parallel Redundancy Protocol (PRP) defines a redundancy protocol for high availability in substation automation networks.

ACTUAL VALUES ⇨ STATUS ⇨⇩ PRP STATUS

■ PRP STATUS ■	⇔	Total Rx Port A: 0	Range: 0 to 4G, blank if PRP disabled
	⇕	Total Rx Port B: 0	Range: 0 to 4G, blank if PRP disabled

⇕	**Mismatches Port A:** 0	Range: 0 to 4G, blank if PRP disabled
⇕	**Mismatches Port B:** 0	Range: 0 to 4G, blank if PRP disabled
⇧	**Total Errors:** 0	Range: 0 to 4G, blank if PRP disabled

SOFTWARE OPTION

The B30 is provided with optional PRP capability. This feature is specified as a software option at the time of ordering. See the Order Codes section in chapter 2 for details.

Total Received Port A is a counter for total messages received (either from DANPs or from SANs) on Port A.

Total Received Port B is a counter for total messages received (either from DANPs or from SANs) on Port B.

Total Errors is a counter for total messages received with an error (bad port code, frame length too short).

Mismatches Port A is a counter for total messages received with an error on Port A (PRP frame, but port received through and LAN ID in the frame do not match).

Mismatches Port B is a counter for total messages received with an error on Port B (PRP frame, but port received through and LAN ID in the frame do not match).

6.3.21 TxGOOSE status

ACTUAL VALUES ⇨ STATUS ⇨⇩ TxGOOSE STATUS

■ **TxGOOSE STATUS** ■	⇔	**R-TxGOOSE 1** **ARP: Off**	Range: On, Off
		⇩	
	⇧	**R-TxGOOSE 16** **ARP: Off**	Range: On, Off

SOFTWARE OPTION

The B30 is provided with optional IEC 61850 capability. This feature is specified as a software option at the time of ordering. See the Order Codes section of chapter 2 for details.

This status is relevant to R-GOOSE reception when configured for SSM or ASM reception modes. It is not relevant for GOOSE or for R-GOOSE in unicast reception mode.

ARP — The unicast mode of R-GOOSE transmission requires Address Resolution Protocol (ARP) for the resolution of the network layer address into the MAC layer address. R-TxGOOSE## ARP status On indicates that ARP responses are being received and the destination MAC address for R-GOOSE transmissions has been obtained. This status remains Off if TxGOOSE## is not configured for R-GOOSE. It also remains Off if setting R-TxGOOSE1 DST IP is set to a multicast address. In the case where setting R-TxGOOSE1 DST IP is configured with a unicast address and this status indicates Off, TxGOOSE## transmission will be off, and therefore communication network diagnosis needs to be carried out.

This status is only applicable for R-GOOSE transmission with setting R-TxGOOSE1 DST IP set to a unicast IP address. It is not applicable for GOOSE or for R-GOOSE when setting R-TxGOOSE1 DST IP is multicast.

6.4 Metering

6.4.1 Metering conventions

6.4.1.1 UR convention for measuring power and energy

The figure illustrates the conventions established for use in UR devices.

Figure 6-2: Flow direction of signed values for watts and VARs

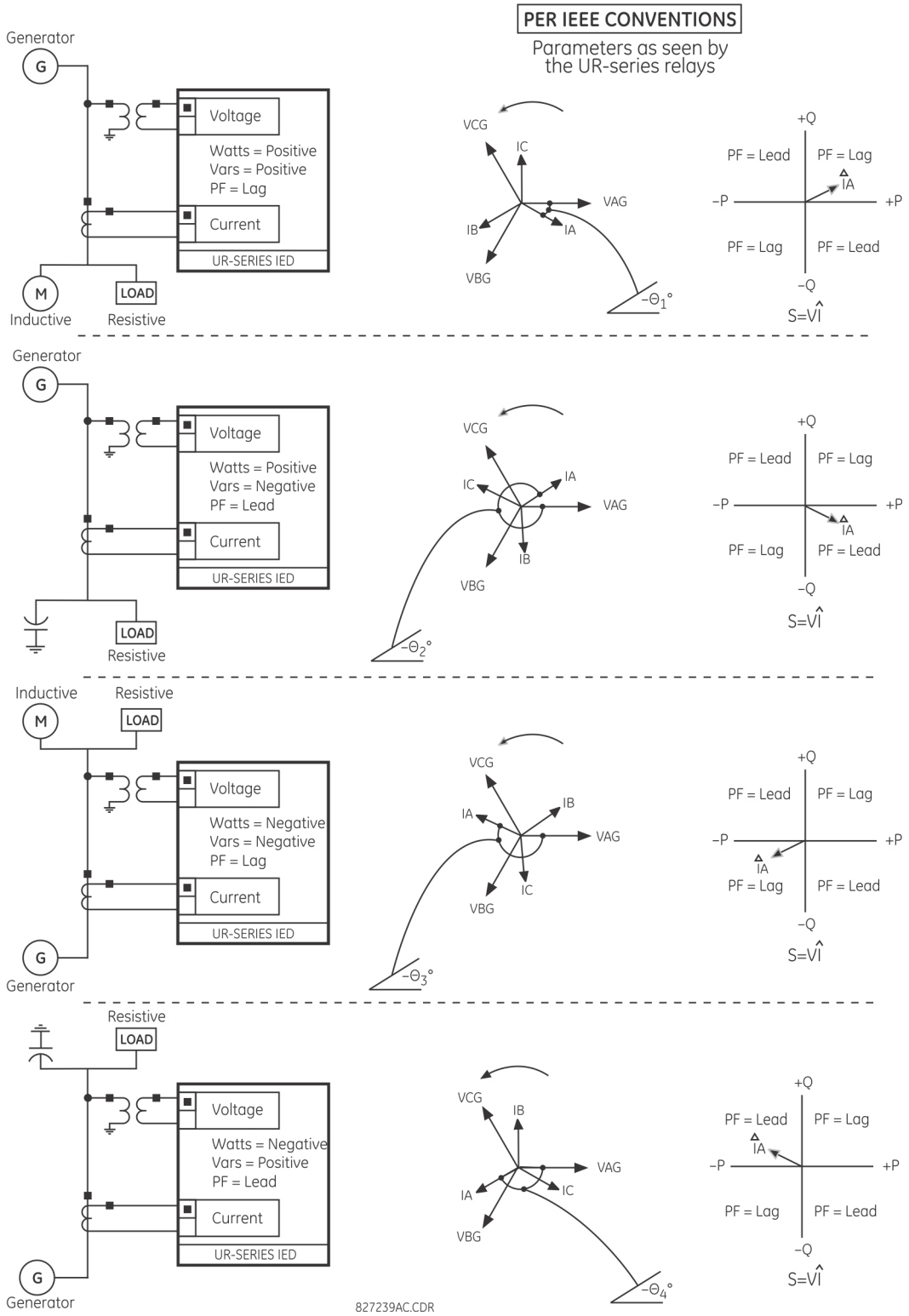

6.4.1.2 UR convention for measuring phase angles

All phasors calculated by URs and used for protection, control and metering functions are rotating phasors that maintain the correct phase angle relationships with each other at all times.

For display and oscillography purposes, all phasor angles in a given relay are referred to an AC input channel pre-selected by the **SETTINGS ⇨⇩ SYSTEM SETUP ⇨⇩ POWER SYSTEM ⇨⇩ FREQUENCY AND PHASE REFERENCE** setting. This setting defines a particular AC signal source to be used as the reference.

The relay first determines if any "Phase VT" bank is indicated in the source. If it is, voltage channel VA of that bank is used as the angle reference. Otherwise, the relay determines if any "Aux VT" bank is indicated; if it is, the auxiliary voltage channel of that bank is used as the angle reference. If neither of the two conditions is satisfied, then two more steps of this hierarchical procedure to determine the reference signal include "Phase CT" bank and "Ground CT" bank.

If the AC signal pre-selected by the relay upon configuration is not measurable, the phase angles are not referenced. The phase angles are assigned as positive in the leading direction, and are presented as negative in the lagging direction, to more closely align with power system metering conventions. The figure illustrates this.

Figure 6-3: UR phase angle measurement convention

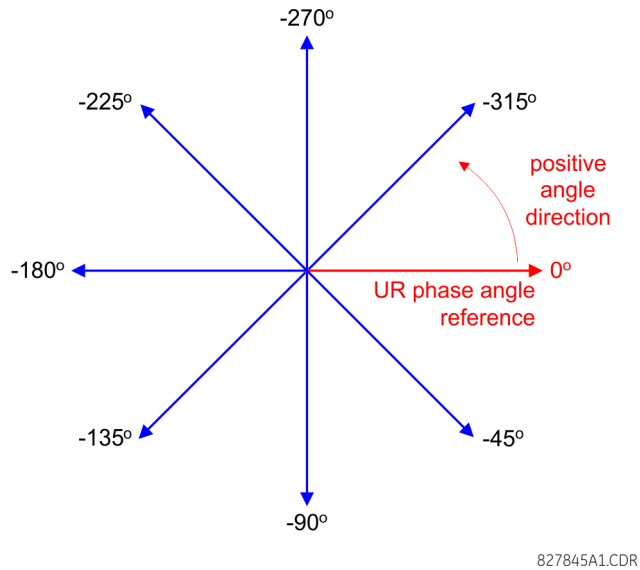

6

6.4.1.3 UR convention for measuring symmetrical components

The URs calculate voltage symmetrical components for the power system phase A line-to-neutral voltage, and symmetrical components of the currents for the power system phase A current. Owing to the above definition, phase angle relations between the symmetrical currents and voltages stay the same irrespective of the connection of instrument transformers. This is important for setting directional protection elements that use symmetrical voltages.

For display and oscillography purposes the phase angles of symmetrical components are referenced to a common reference as described in the previous sub-section.

WYE-connected instrument transformers

- ABC phase rotation:

$$V_0 = \frac{1}{3}(V_{AG} + V_{BG} + V_{CG})$$

$$V_1 = \frac{1}{3}(V_{AG} + aV_{BG} + a^2V_{CG})$$

$$V_2 = \frac{1}{3}(V_{AG} + a^2V_{BG} + aV_{CG})$$

- ACB phase rotation:

$$V_0 = \frac{1}{3}(V_{AG} + V_{BG} + V_{CG})$$

$$V_1 = \frac{1}{3}(V_{AG} + a^2V_{BG} + aV_{CG})$$

$$V_2 = \frac{1}{3}(V_{AG} + aV_{BG} + a^2V_{CG})$$

The above equations apply to currents as well.

DELTA-connected instrument transformers

- ABC phase rotation:

$$V_0 = N/A$$
$$V_1 = \frac{1\angle -30°}{3\sqrt{3}}(V_{AB} + aV_{BC} + a^2V_{CA})$$
$$V_2 = \frac{1\angle 30°}{3\sqrt{3}}(V_{AB} + a^2V_{BC} + aV_{CA})$$

- ACB phase rotation:

$$V_0 = N/A$$
$$V_1 = \frac{1\angle 30°}{3\sqrt{3}}(V_{AB} + a^2V_{BC} + aV_{CA})$$
$$V_2 = \frac{1\angle -30°}{3\sqrt{3}}(V_{AB} + aV_{BC} + a^2V_{CA})$$

The zero-sequence voltage is not measurable under the Delta connection of instrument transformers and is defaulted to zero. The table below shows an example of symmetrical components calculations for the ABC phase rotation.

Table 6-1: Symmetrical components calculation example

SYSTEM VOLTAGES, sec. V *						VT conn.	relay INPUTS, sec. V			SYMM. COMP, sec. V		
V_{AG}	V_{BG}	V_{CG}	V_{AB}	V_{BC}	V_{CA}		F5ac	F6ac	F7ac	V_0	V_1	V_2
13.9 ∠0°	76.2 ∠−125°	79.7 ∠−250°	84.9 ∠−313°	138.3 ∠−97°	85.4 ∠−241°	WYE	13.9 ∠0°	76.2 ∠−125°	79.7 ∠−250°	19.5 ∠−192°	56.5 ∠−7°	23.3 ∠−187°
UNKNOWN (only V_1 and V_2 can be determined)			84.9 ∠0°	138.3 ∠−144°	85.4 ∠−288°	DELTA	84.9 ∠0°	138.3 ∠−144°	85.4 ∠−288°	N/A	56.5 ∠−54°	23.3 ∠−234°

* The power system voltages are phase-referenced – for simplicity – to V_{AG} and V_{AB}, respectively. This, however, is a relative matter. It is important to remember that the B30 displays are always referenced as specified under **SETTINGS ⇨⇩ SYSTEM SETUP ⇨⇩ POWER SYSTEM ⇨⇩ FREQUENCY AND PHASE REFERENCE**.

The example above is illustrated in the following figure.

Figure 6-4: Measurement convention for symmetrical components

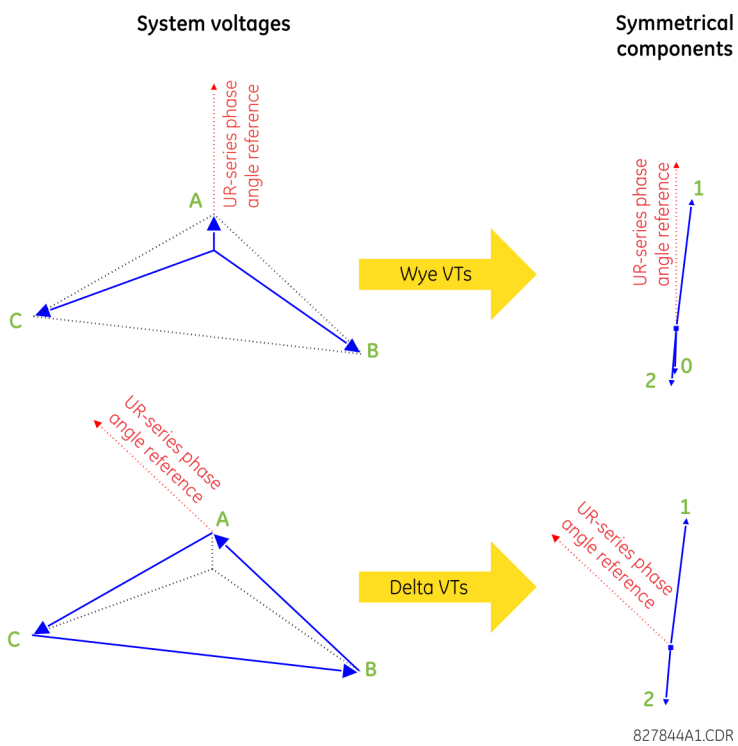

6.4.2 Bus zone

ACTUAL VALUES ⇨⇩ METERING ⇨ BUS ⇨ BUS ZONE 1

■ BUS ZONE 1 ■	⇔	BUS 1 DIFF Iad: 0.000 A 0.0°
	⇩	BUS 1 REST Iar: 0.000 A 0.0°
	⇩	BUS 1 DIFF Ibd: 0.000 A 0.0°
	⇩	BUS 1 REST Ibr: 0.000 A 0.0°
	⇩	BUS 1 DIFF Icd: 0.000 A 0.0°
	⇧	BUS 1 REST Icr: 0.000 A 0.0°

These values display the differential and restraint currents phasors for the bus zone. The magnitudes are displayed in primary amperes.

6.4.3 Sources

6.4.3.1 Menu

ACTUAL VALUES ⇨⇩ METERING ⇨⇩ SOURCE SRC 1

■ SOURCE SRC 1 ■	⇔	■ PHASE CURRENT ■ SRC 1	See below
	⇩	■ GROUND CURRENT ■ SRC 1	See page 6-17
	⇩	■ PHASE VOLTAGE ■ SRC 1	See page 6-17
	⇩	■ AUXILIARY VOLTAGE ■ SRC 1	See page 6-18
	⇩	■ POWER ■ SRC 1	See page 6-18
	⇩	■ ENERGY ■ SRC 1	See page 6-19
	⇩	■ DEMAND ■ SRC 1	See page 6-20
	⇧	■ FREQUENCY ■ SRC 1	See page 6-21

This menu displays the metered values available for each source.

Metered values presented for each source depend on the phase and auxiliary VTs and phase and ground CTs assignments for this particular source. For example, if no phase VT is assigned to this source, then any voltage, energy, and power values are unavailable.

6.4.3.2 Phase current metering

ACTUAL VALUES ⇨⇩ METERING ⇨ SOURCE SRC 1 ⇨ PHASE CURRENT

■ PHASE CURRENT ■ SRC 1	⇔	SRC 1 RMS Ia: 0.000 b: 0.000 c: 0.000 A

```
⇕  SRC 1  RMS Ia:
   0.000  A
⇕  SRC 1  RMS Ib:
   0.000  A
⇕  SRC 1  RMS Ic:
   0.000  A
⇕  SRC 1  RMS In:
   0.000  A
⇕  SRC 1  PHASOR Ia:
   0.000  A      0.0°
⇕  SRC 1  PHASOR Ib:
   0.000  A      0.0°
⇕  SRC 1  PHASOR Ic:
   0.000  A      0.0°
⇕  SRC 1  PHASOR In:
   0.000  A      0.0°
⇕  SRC 1  ZERO SEQ I0:
   0.000  A      0.0°
⇕  SRC 1  POS SEQ I1:
   0.000  A      0.0°
⇧  SRC 1  NEG SEQ I2:
   0.000  A      0.0°
```

The metered phase current values are displayed in this menu. The "SRC 1" text gets replaced by whatever name was programmed by the user for the associated source (see **SETTINGS ⇨⇩ SYSTEM SETUP ⇨⇩ SIGNAL SOURCES**).

6.4.3.3 Ground current metering

ACTUAL VALUES ⇨⇩ METERING ⇨ SOURCE SRC 1 ⇨ GROUND CURRENT

```
■ GROUND CURRENT
■ SRC 1
```

```
⇔  SRC 1  RMS Ig:
   0.000  A
⇕  SRC 1  PHASOR Ig:
   0.000  A      0.0°
⇧  SRC 1  PHASOR Igd:
   0.000  A      0.0°
```

The metered ground current values are displayed in this menu. The "SRC 1" text is replaced by the name programmed by the user for the associated source (see **SETTINGS ⇨⇩ SYSTEM SETUP ⇨⇩ SIGNAL SOURCES**).

6.4.3.4 Phase voltage metering

ACTUAL VALUES ⇨⇩ METERING ⇨ SOURCE SRC 1 ⇨ PHASE VOLTAGE

```
■ PHASE VOLTAGE
■ SRC 1
```

```
⇔  SRC 1  RMS Vag:
   0.00  V
⇕  SRC 1  RMS Vbg:
   0.00  V
⇕  SRC 1  RMS Vcg:
   0.00  V
⇕  SRC 1  PHASOR Vag:
   0.000  V      0.0°
```

```
⇕ SRC 1  PHASOR Vbg:
  0.000  V      0.0°

⇕ SRC 1  PHASOR Vcg:
  0.000  V      0.0°

⇕ SRC 1  RMS Vab:
  0.00  V

⇕ SRC 1  RMS Vbc:
  0.00  V

⇕ SRC 1  RMS Vca:
  0.00  V

⇕ SRC 1  PHASOR Vab:
  0.000  V      0.0°

⇕ SRC 1  PHASOR Vbc:
  0.000  V      0.0°

⇕ SRC 1  PHASOR Vca:
  0.000  V      0.0°

⇕ SRC 1  ZERO SEQ V0:
  0.000  V      0.0°

⇕ SRC 1  POS SEQ V1:
  0.000  V      0.0°

⇧ SRC 1  NEG SEQ V2:
  0.000  V      0.0°
```

The metered phase voltage values are displayed in this menu. The "SRC 1" text is replaced by the name programmed by the user for the associated source (see **SETTINGS ⇨⇩ SYSTEM SETUP ⇨⇩ SIGNAL SOURCES**).

6.4.3.5 Auxiliary voltage metering

ACTUAL VALUES ⇨⇩ METERING ⇨ SOURCE SRC 1 ⇨⇩ AUXILIARY VOLTAGE

```
■ AUXILIARY VOLTAGE
■ SRC 1

⇔ SRC 1  RMS Vx:
  0.00  V

⇧ SRC 1  PHASOR Vx:
  0.000  V      0.0°
```

The metered auxiliary voltage values are displayed in this menu. The "SRC 1" text is replaced by the name programmed by the user for the associated source (see **SETTINGS ⇨⇩ SYSTEM SETUP ⇨⇩ SIGNAL SOURCES**).

6.4.3.6 Power metering

ACTUAL VALUES ⇨⇩ METERING ⇨ SOURCE SRC 1 ⇨⇩ POWER

```
■ POWER
■ SRC 1

⇔ SRC 1  REAL POWER
  3ϕ:  0.000  W

⇕ SRC 1  REAL POWER
  ϕa:  0.000  W

⇕ SRC 1  REAL POWER
  ϕb:  0.000  W

⇕ SRC 1  REAL POWER
  ϕc:  0.000  W

⇕ SRC 1  REACTIVE PWR
  3ϕ:  0.000  var
```

```
⇕ SRC 1  REACTIVE PWR
  ϕa:  0.000  var

⇕ SRC 1  REACTIVE PWR
  ϕb:  0.000  var

⇕ SRC 1  REACTIVE PWR
  ϕc:  0.000  var

⇕ SRC 1  APPARENT PWR
  3ϕ:  0.000  VA

⇕ SRC 1  APPARENT PWR
  ϕa:  0.000  VA

⇕ SRC 1  APPARENT PWR
  ϕb:  0.000  VA

⇕ SRC 1  APPARENT PWR
  ϕc:  0.000  VA

⇕ SRC 1  POWER FACTOR
  3ϕ:     1.000

⇕ SRC 1  POWER FACTOR
  ϕa:     1.000

⇕ SRC 1  POWER FACTOR
  ϕb:     1.000

⇧ SRC 1  POWER FACTOR
  ϕc:     1.000
```

This menu displays metered values for real, reactive, and apparent power, as well as power factor. The "SRC 1" text is replaced by the name programmed by the user for the associated source (see **SETTINGS ⇨⇩ SYSTEM SETUP ⇨⇩ SIGNAL SOURCES**).

When VTs are configured in wye, the B30 calculates power in each phase and three-phase power is measured as

$$S = V_A \times \hat{I}_A + V_B \times \hat{I}_B + V_C \times \hat{I}_C \qquad \textbf{Eq. 6-1}$$

When VTs are configured in delta, the B30 does not calculate power in each phase and three-phase power is measured as

$$S = V_{AB} \times \hat{I}_A + V_{CB} \times \hat{I}_C \qquad \textbf{Eq. 6-2}$$

where

S is the apparent power

V_A, V_B, V_C, I_A, I_B, I_C are phase voltage and phase current phasors

V_{AB} and V_{CB} are phase-to-phase voltage phasors

$\hat{I}$ is the conjugate of I

6.4.3.7 Energy metering

ACTUAL VALUES ⇨⇩ METERING ⇨ SOURCE SRC 1 ⇨⇩ ENERGY

```
■ ENERGY
■ SRC 1
```

```
⇔ SRC 1  POS WATTHOUR:
  0.000  Wh

⇕ SRC 1  NEG WATTHOUR:
  0.000  Wh

⇕ SRC 1  POS VARHOUR:
  0.000  varh

⇧ SRC 1  NEG VARHOUR:
  0.000  varh
```

This menu displays metered values for real and reactive energy. The "SRC 1" text is replaced by the name programmed by the user for the associated source (see **SETTINGS ⇨⇩ SYSTEM SETUP ⇨⇩ SIGNAL SOURCES**). Because energy values are accumulated, record them and then reset them immediately prior to changing CT or VT characteristics.

6.4.3.8 Demand metering

ACTUAL VALUES ⇨⇩ METERING ⇨ SOURCE SRC 1 ⇨⇩ DEMAND

■ DEMAND ■ SRC 1	⇔	SRC 1 DMD IA: 0.000 A
	⇩	SRC 1 DMD IA MAX: 0.000 A
	⇩	SRC 1 DMD IA DATE: 2001/07/31 16:30:07
	⇩	SRC 1 DMD IB: 0.000 A
	⇩	SRC 1 DMD IB MAX: 0.000 A
	⇩	SRC 1 DMD IB DATE: 2001/07/31 16:30:07
	⇩	SRC 1 DMD IC: 0.000 A
	⇩	SRC 1 DMD IC MAX: 0.000 A
	⇩	SRC 1 DMD IC DATE: 2001/07/31 16:30:07
	⇩	SRC 1 DMD W: 0.000 W
	⇩	SRC 1 DMD W MAX: 0.000 W
	⇩	SRC 1 DMD W DATE: 2001/07/31 16:30:07
	⇩	SRC 1 DMD VAR: 0.000 var
	⇩	SRC 1 DMD VAR MAX: 0.000 var
	⇩	SRC 1 DMD VAR DATE: 2001/07/31 16:30:07
	⇩	SRC 1 DMD VA: 0.000 VA
	⇩	SRC 1 DMD VA MAX: 0.000 VA
	⇧	SRC 1 DMD VA DATE: 2001/07/31 16:30:07

This menu displays metered values for current and power demand. The "SRC 1" text is replaced by the name programmed by the user for the associated source (see **SETTINGS ⇨⇩ SYSTEM SETUP ⇨⇩ SIGNAL SOURCES**).

The relay measures (absolute values only) the source demand on each phase and average three phase demand for real, reactive, and apparent power. These parameters can be monitored to reduce supplier demand penalties or for statistical metering purposes. Demand calculations are based on the measurement type selected in the **SETTINGS ⇨ PRODUCT SETUP**

⇨⇩ **DEMAND** menu. For each quantity, the relay displays the demand over the most recent demand time interval, the maximum demand since the last maximum demand reset, and the time and date stamp of this maximum demand value. Maximum demand quantities can be reset to zero with the **CLEAR RECORDS** ⇨⇩ **CLEAR DEMAND RECORDS** command.

6.4.3.9 Frequency metering

ACTUAL VALUES ⇨⇩ METERING ⇨ SOURCE SRC 1 ⇨⇩ FREQUENCY

■ FREQUENCY ■ SRC 1	⇔	SRC 1 FREQUENCY: 0.00 Hz

The metered frequency values are displayed in this menu. The "SRC 1" text is replaced by the name programmed by the user for the associated source (see **SETTINGS** ⇨⇩ **SYSTEM SETUP** ⇨⇩ **SIGNAL SOURCES**).

SOURCE FREQUENCY is measured via software-implemented zero-crossing detection of an AC signal. The signal is either a Clarke transformation of three-phase voltages or currents, auxiliary voltage, or ground current as per source configuration (see the **SYSTEM SETUP** ⇨⇩ **POWER SYSTEM** settings). The signal used for frequency estimation is low-pass filtered. The final frequency measurement is passed through a validation filter that eliminates false readings due to signal distortions and transients.

6.4.4 Tracking frequency

ACTUAL VALUES ⇨⇩ METERING ⇨⇩ TRACKING FREQUENCY

■ TRACKING FREQUENCY ■	⇔	TRACKING FREQUENCY: 60.00 Hz

The tracking frequency displays here. The frequency is tracked based on the selection of the reference source with the **FREQUENCY AND PHASE REFERENCE** setting in the **SETTINGS** ⇨⇩ **SYSTEM SETUP** ⇨⇩ **POWER SYSTEM** menu. See the Power System section of chapter 5 for details.

6.4.5 FlexElements

ACTUAL VALUES ⇨⇩ METERING ⇨⇩ FLEXELEMENTS ⇨ FLEXELEMENT 1(8)

■ FLEXELEMENT 1 ■	⇔	FLEXELEMENT 1 OpSig: 0.000

The operating signals for the FlexElements are displayed in pu values using the following definitions of the base units.

Table 6-2: FlexElement base units

Base unit	Description
BREAKER ACC ARCING AMPS (Brk X Acc Arc Amp A, B, and C)	BASE = 2000 kA^2 × cycle
BREAKER ARCING AMPS (Brk X Arc Amp A, B, and C)	BASE = 1 kA^2 × cycle
BUS DIFFERENTIAL RESTRAINING CURRENT (Bus Diff Mag)	I_{BASE} = maximum primary RMS value of the +IN and –IN inputs (CT primary for source currents, and bus reference primary current for bus differential currents)
BUS DIFFERENTIAL RESTRAINING CURRENT (Bus Rest Mag)	I_{BASE} = maximum primary RMS value of the +IN and – IN inputs (CT primary for source currents, and bus reference primary current for bus differential currents)
DCmA	BASE = maximum value of the **DCMA INPUT MAX** setting for the two transducers configured under the +IN and –IN inputs.
FREQUENCY	f_{BASE} = 1 Hz
PHASE ANGLE	φ_{BASE} = 360 degrees (see the UR angle referencing convention)
POWER FACTOR	PF_{BASE} = 1.00
RTDs	BASE = 100°C

Base unit	Description
SOURCE CURRENT	I_{BASE} = maximum nominal primary RMS value of the +IN and –IN inputs
SOURCE ENERGY (Positive and Negative Watthours, Positive and Negative Varhours)	E_{BASE} = 10000 MWh or MVAh, respectively
SOURCE POWER	P_{BASE} = maximum value of $V_{BASE} \times I_{BASE}$ for the +IN and –IN inputs
SOURCE VOLTAGE	V_{BASE} = maximum nominal primary RMS value of the +IN and –IN inputs

6.4.6 RxGOOSE analogs

ACTUAL VALUES ⇨⇩ METERING ⇨⇩ RxGOOSE Analogs

```
■ RxGOOSE        ⇔   RxGOOSE Analog 1
■ Analogs            0.000
                     ⇩
                 ⇧   RxGOOSE Analog 32
                     0.000
```

The B30 is provided with optional GOOSE communications capability. This feature is specified as a software option at the time of ordering. See the Order Codes section of chapter 2 for details.

The RxGOOSE Analog values display in this menu. The RxGOOSE Analog values are received via IEC 61850 GOOSE messages sent from other devices.

6.4.7 Transducer inputs and outputs

ACTUAL VALUES ⇨⇩ METERING ⇨⇩ TRANSDUCER I/O DCMA INPUTS ⇨ DCMA INPUT xx

```
■ DCMA INPUT xx  ⇔   DCMA INPUT xx
■                    0.000 mA
```

Actual values for each DCmA input channel that is enabled are displayed with the top line as the programmed channel ID and the bottom line as the value followed by the programmed units.

ACTUAL VALUES ⇨⇩ METERING ⇨⇩ TRANSDUCER I/O RTD INPUTS ⇨ RTD INPUT xx

```
■ RTD INPUT xx   ⇔   RTD INPUT xx
■                    -50 °C
```

Actual values for each RTD input channel that is enabled are displayed with the top line as the programmed channel ID and the bottom line as the value.

6.5 Records

6.5.1 User-programmable fault reports

ACTUAL VALUES ⇨⇩ RECORDS ⇨⇩ USER PROGRAMMABLE FAULT REPORTS

```
■ USER PROGRAMMABLE  ⇔   NEWEST RECORD
■ FAULT REPORTS          NUMBER:      0
                     ⇩   LAST CLEARED DATE:
                         2002/8/11 14:23:57
                     ⇧   LAST REPORT DATE:
                         2002/10/09 08:25:27
```

This menu displays the user-programmable fault report actual values. See the User-Programmable Fault Report section in chapter 5 for information on this feature.

6.5.2 Event records

ACTUAL VALUES ⇨⇩ RECORDS ⇨⇩ EVENT RECORDS

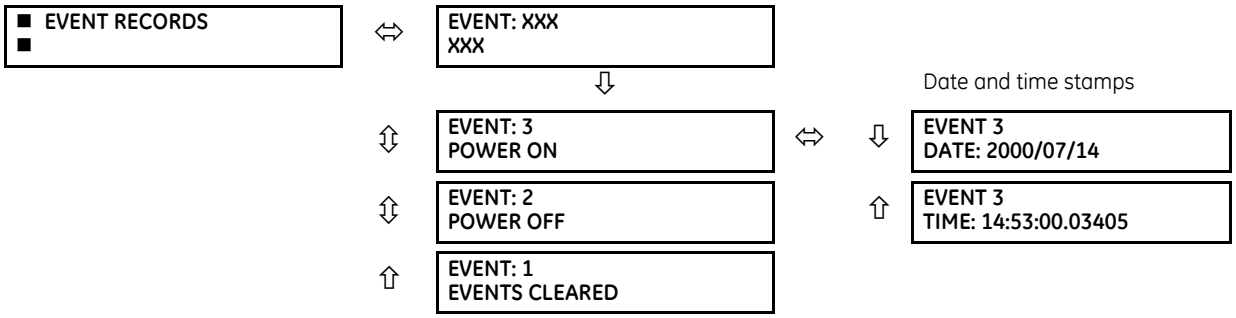

The event records menu shows the contextual data associated with up to the last 1024 events, listed in chronological order from most recent to oldest. When all 1024 event records have been filled, the oldest record is removed as a new record is added. Each event record shows the event identifier/sequence number, cause, and date/time stamp associated with the event trigger. See the **COMMANDS ⇨⇩ CLEAR RECORDS** menu for clearing event records.

Only major output operands generate events, not every operand. Elements that assert output per phase, for example, log operating phase output only without asserting the common three-phase operand event.

See also the system log (syslog) information in the previous chapter.

The event records are also viewable in the software and in a web browser. The figure shows the event records in the software. To view them in a web browser, enter the IP address of the device.

Figure 6-5: Event records viewed in EnerVista software

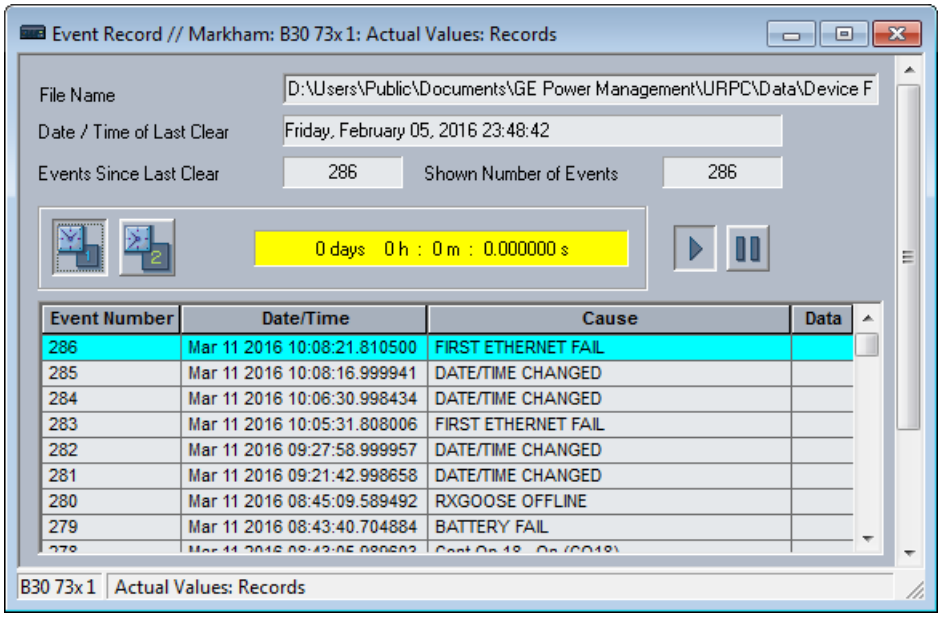

6

6.5.3 Oscillography

ACTUAL VALUES ⇨⇩ RECORDS ⇨⇩ OSCILLOGRAPHY

```
■ OSCILLOGRAPHY
■
```

⇔

```
FORCE TRIGGER?
No
```

Range: No, Yes

⇕

```
NUMBER OF TRIGGERS:
  0
```

⇕

```
AVAILABLE RECORDS:
  0
```

⇕

```
CYCLES PER RECORD:
  0
```

⇧

```
LAST CLEARED DATE:
2000/07/14  15:40:16
```

This menu allows the user to view the number of triggers involved and number of oscillography traces available. The cycles per record value is calculated to account for the fixed amount of data storage for oscillography. See the Oscillography section of chapter 5 for details.

A trigger can be forced here at any time by setting "Yes" to the FORCE TRIGGER? command. See the **COMMANDS ⇨⇩ CLEAR RECORDS** menu for information on clearing the oscillography records.

6.5.4 Data logger

ACTUAL VALUES ⇨⇩ RECORDS ⇨⇩ DATA LOGGER

```
■ DATA LOGGER
■
```

⇔

```
OLDEST SAMPLE TIME:
2000/01/14 13:45:51
```

⇧

```
NEWEST SAMPLE TIME:
2000/01/14 15:21:19
```

6

The **OLDEST SAMPLE TIME** represents the time at which the oldest available samples were taken. It is static until the log gets full, at which time it starts counting at the defined sampling rate.

The **NEWEST SAMPLE TIME** represents the time the most recent samples were taken. It counts up at the defined sampling rate. If the data logger channels are defined, then both values are static.

See the **COMMANDS ⇨⇩ CLEAR RECORDS** menu for clearing data logger records.

6.5.5 Breaker maintenance

ACTUAL VALUES ⇨⇩ RECORDS ⇨⇩ MAINTENANCE ⇨ BREAKER 1(6)

```
■ BREAKER 1
■
```

⇔

```
BKR 1 ACC ARC AMP
ϕA:   0.00 kA2-cyc
```

⇕

```
BKR 1 ACC ARC AMP
ϕB:   0.00 kA2-cyc
```

⇕

```
BKR 1 ACC ARC AMP
ϕC:   0.00 kA2-cyc
```

⇕

```
BKR 1 OPERATING TIME
ϕA:    0 ms
```

⇕

```
BKR 1 OPERATING TIME
ϕB:    0 ms
```

⇕

```
BKR 1 OPERATING TIME
ϕC:    0 ms
```

⇕	BKR 1 OPERATING TIME: 0 ms
⇕	BKR 1 ARCING AMP ϕA: 0.00 kA2-cyc
⇕	BKR 1 ARCING AMP ϕB: 0.00 kA2-cyc
⇕	BKR 1 ARCING AMP ϕC: 0.00 kA2-cyc
⇕	BKR 1 AMP MAX ϕA: 0.00 kA
⇕	BKR 1 AMP MAX ϕB: 0.00 kA
⇑	BKR 1 AMP MAX ϕC: 0.00 kA

There is an identical menu for each of the breakers.

The **BKR 1 ACC ARC AMP** values are in units of kA^2-cycles. See the **COMMANDS ⇨⇩ CLEAR RECORDS** menu for clearing breaker arcing current records.

The **BREAKER OPERATING TIME** is defined as the slowest operating time of breaker poles that were initiated to open.

All of the values are stored in non-volatile memory and retained with power cycling.

6.6 Product information

6.6.1 Model information

ACTUAL VALUES ⇨⇩ PRODUCT INFO ⇨ MODEL INFORMATION

■ MODEL INFORMATION ■	⇔	ORDER CODE LINE 1: B30-A00-AAA-A0A-A0A-	Range:	standard GE order code format
	⇕	ORDER CODE LINE 2: A0A-A0A-A0A	Range:	up to 20 alphanumeric characters
	⇕	ORDER CODE LINE 3:	Range:	up to 20 alphanumeric characters
	⇕	ORDER CODE LINE 4:	Range:	up to 20 alphanumeric characters
	⇕	SERIAL NUMBER:	Range:	standard GE serial number format
	⇕	ETHERNET MAC ADDRESS 000000000000	Range:	standard Ethernet MAC address format
	⇕	MANUFACTURING DATE:	Range:	YYYY/MM/DD HH:MM:SS
	⇕	OPERATING TIME: 0:00:00	Range:	operating time in HH:MM:SS
	⇕	CT/ VT ADVANCED DIAG ACTIVE: No	Range:	Yes, No
	⇑	LAST SETTING CHANGE: 1970/01/01 23:11:19	Range:	YYYY/MM/DD HH:MM:SS

6

The order code, serial number, Ethernet MAC address, date and time of manufacture, and operating time are shown here. The rear panel on the device contains similar information.

ETHERNET MAC ADDRESS — UR devices with firmware 7.0x and above have three Ethernet ports that can be used on three networks. The MAC address displays for port 1. The MAC address for port 2 is one higher. The MAC address for port 3 is one higher than port 2. In redundant mode, the MAC addresses for ports 2 and 3 are the same as port 2.

6.6.2 Firmware revisions

ACTUAL VALUES ⇨⇩ PRODUCT INFO ⇨ FIRMWARE REVISIONS

■ FIRMWARE REVISIONS ■	⇔	B30 Relay REVISION: 7.4x	Range: 0.00 to 655.35 Revision number of the application firmware.
	⇩	MODIFICATION FILE NUMBER: 0	Range: 0 to 65535 (ID of the MOD FILE) Value is 0 for each standard firmware release.
	⇩	BOOT PROGRAM REVISION: 7.01	Range: 0.00 to 655.35 Revision number of the boot program firmware.
	⇩	FRONT PANEL PROGRAM REVISION: 2.01	Range: 0.00 to 655.35 Revision number of faceplate program firmware.
	⇩	COMPILE DATE: 2016/09/15 04:55:16	Range: YYYY/MM/DD HH:MM:SS Date and time when product firmware was built.
	⇩	BOOT DATE: 2013/09/15 16:41:32	Range: YYYY/MM/DD HH:MM:SS Date and time when the boot program was built.
	⇩	FPGA PROGRAM REVISION: 02.02	Range: 0.00 to 655.35 Revision number for FPGA.
	⇧	FPGA DATE: 2016/09/15 16:41:32	Range: YYYY/MM/DD HH:MM:SS Date and time when the FPGA was built.

The shown data is illustrative only. A modification file number of 0 indicates that, currently, no modifications have been installed.

B30 Bus Differential System

Chapter 7: Commands and targets

This chapter outlines the Commands and Targets menus and self-tests/error messages. Commands related to the IEC 61850 protocol are outlined in the IEC 61850 section of the Settings chapter. Log/error messages for IEC 61850 are outlined in the UR Family Communications Guide.

7.1 Commands menu

```
  COMMANDS
  ⇩
⇩ ■■ COMMANDS
  ■■ VIRTUAL INPUTS
⇕ ■■ COMMANDS
  ■■ CLEAR RECORDS
⇕ ■■ COMMANDS
  ■■ SET DATE AND TIME
⇕ ■■ COMMANDS
  ■■ RELAY MAINTENANCE
⇧ ■■ COMMANDS
  ■■ SECURITY
```

The commands menu contains relay directives intended for operations personnel. All commands can be protected from unauthorized access via the command password; see the Security section of chapter 5 for details. The following flash message appears after successfully command entry.

```
COMMAND
EXECUTED
```

7.1.1 Virtual inputs

COMMANDS ⇨ VIRTUAL INPUTS

■■ COMMANDS ■■ VIRTUAL INPUTS	⇔	**Virt Ip 1** **Off** — Range: Off, On
	⇕	**Virt Ip 2** **Off** — Range: Off, On
	⇩	
	⇧	**Virt Ip 64** **Off** — Range: Off, On

The states of up to 64 virtual inputs are changed here. The first line of the display indicates the ID of the virtual input. The second line indicates the current or selected status of the virtual input. This status is a state off (logic 0) or on (logic 1).

7.1.2 Clear records

COMMANDS ⇨ CLEAR RECORDS

■■ COMMANDS ■■ CLEAR RECORDS	⇔	**CLEAR USER FAULT REPORTS? No** — Range: No, Yes
	⇕	**CLEAR EVENT RECORDS? No** — Range: No, Yes
	⇕	**CLEAR OSCILLOGRAPHY? No** — Range: No, Yes
	⇕	**CLEAR DATA LOGGER? No** — Range: No, Yes
	⇕	**CLEAR BREAKER 1 ARCING AMPS? No** — Range: No, Yes
	⇕	**CLEAR BREAKER 2 ARCING AMPS? No** — Range: No, Yes
	⇕	**CLEAR DEMAND RECORDS? No** — Range: No, Yes
	⇕	**CLEAR ENERGY? No** — Range: No, Yes
	⇕	**CLEAR UNAUTHORIZED ACCESS? No** — Range: No, Yes
	⇕	**CLEAR DIRECT I/O COUNTERS? No** — Range: No, Yes. Valid only for units with Direct Input/Output module.
	⇕	**CLEAR TELEPROTECT COUNTERS? No** — Range: No, Yes
	⇕	■ **CLEAR IEC61850** ■ **XWSI OPCNT** — See below
	⇕	■ **CLEAR IEC61850** ■ **XCBR OPCNT** — See below
	⇧	**CLEAR ALL RELAY RECORDS? No** — Range: No, Yes

This menu contains commands for clearing historical data such as the event records. Data is cleared by changing a command setting to "Yes" and pressing the **ENTER** key. After clearing data, the command setting automatically reverts to "No."

COMMANDS ⇨ CLEAR RECORDS ⇨⇩ CLEAR IEC61850 XWSI OPCNT

■ CLEAR IEC61850 ■ XWSI OPCNT	⇔	CLEAR XSWI 1 OpCnt? No	Range: No, Yes
		⇩	
	⇧	CLEAR XSWI 24 OpCnt? No	Range: No, Yes

COMMANDS ⇨ CLEAR RECORDS ⇨⇩ CLEAR IEC61850 XCBR OPCNT

■ CLEAR IEC61850 ■ XCBR OPCNT	⇔	CLEAR XCBR 1 OpCnt? No	Range: No, Yes
		⇩	
	⇧	CLEAR XCBR 8 OpCnt? No	Range: No, Yes

The Clear XSWI commands clear the disconnect operation counters for each phase and the three-phase counter. Similarly, the Clear XCBR commands clear the circuit breaker operation counters for each phase and the three-phase counter.

7.1.3 Set date and time

COMMANDS ⇨⇩ SET DATE AND TIME

■■ COMMANDS ■■ SET DATE AND TIME	⇔	SET DATE AND TIME: 2000/01/14 13:47:03	Range: YYYY/MM/DD HH:MM:SS

The date and time can be entered on the faceplate keypad. The time setting is based on the 24-hour clock. The complete date, as a minimum, must be entered to allow execution of this command. The new time and date take effect when the **ENTER** key is pressed.

When the relay is synchronizing to an external time source such as PTP, IRIG-B, or SNTP, the manually entered time is overwritten.

The timescale of the entered time is local time, including daylight savings time where and when applicable.

7.1.4 Relay maintenance

COMMANDS ⇨⇩ RELAY MAINTENANCE

■■ COMMANDS ■■ RELAY MAINTENANCE	⇔	PERFORM LAMP TEST? No	Range: No, Yes
	⇩⇧	UPDATE ORDER CODE? No	Range: No, Yes
	⇩⇧	REBOOT RELAY? No	Range: No, Yes
	⇩⇧	SERVICE COMMAND 0	Range: 0, 101, 20511
	⇧	SAVE VOLATILE DATA? No	Range: No, Yes

This menu contains commands for relay maintenance purposes. Commands for the lamp test and order code are activated by changing a command setting to "Yes" and pressing the **ENTER** key. The command setting then automatically reverts to "No." The service command is activated by entering a numerical code and pressing the **ENTER** key.

PERFORM LAMP TEST — Turns on all faceplate LEDs and display pixels for a short duration.

UPDATE ORDER CODE — This command causes the relay to scan the backplane for the hardware modules and update the order code to match. If an update occurs, the following message displays.

```
UPDATING...
PLEASE WAIT
```

There is no impact if there have been no changes to the hardware modules. When an update does not occur, the ORDER CODE NOT UPDATED message displays.

REBOOT RELAY — Restarts the relay so that changes to configuration settings can take effect. In most cases, if changes are made to the configuration settings these changes do not take effect unless the relay is rebooted.

NOTE

With the CyberSentry option, the Administrator and Operator roles can initiate the Reboot Relay command.

SERVICE COMMAND — Performs specific B30 service actions. Presently, there are two service actions available. Code "20511" returns all settings to their factory default value and restarts the relay (you then re-enter IP addresses, restart, set unit to "Programmed"). Code “101” is used to clear factory diagnostic information stored in the non-volatile memory. If a code other than these two is entered, the command is ignored and no action is taken. Various self-checking diagnostics are performed in the background while the B30 is running, and diagnostic information is stored on the non-volatile memory from time to time based on the self-checking result. Although the diagnostic information is cleared before the B30 is shipped from the factory, the user can want to clear the diagnostic information for themselves under certain circumstances. For example, you clear diagnostic information after replacement of hardware. Once the diagnostic information is cleared, all self-checking variables are reset to their initial state and diagnostics restart from scratch.

SAVE VOLATILE DATA — Saves this data to compact flash memory prior to shutdown. This allows the saved data to be as recent as possible instead of relying on the periodic timer to save the data.

7.1.5 Security

COMMANDS ⇨⇩ SECURITY

```
■■ SECURITY
■■
```

⇔

```
ADMINISTRATOR
LOGOFF: No
```

Range: Yes, No

⇩

```
ENGINEER
LOGOFF: No
```

Range: Yes, No

⇩

```
OPERATOR
LOGOFF: No
```

Range: Yes, No

⇧

```
CLEAR SECURITY DATA:
No
```

Range: Yes, No

With the CyberSentry option, this setting is available to enable or disable the following commands.

ADMINISTRATOR LOGOFF — Selecting ‘Yes’ allows the Supervisor to forcefully logoff an administrator session.

ENGINEER LOGOFF — Selecting ‘Yes’ allows the Supervisor to forcefully logoff an engineer session.

OPERATOR LOGOFF — Selecting ‘Yes’ allows the Supervisor to forcefully logoff an operator session.

CLEAR SECURITY DATA — Selecting ‘Yes’ allows the Supervisor to forcefully clear all the security logs and clears all the operands associated with the self-tests.

7.2 Targets menu

```
TARGETS
```

⇩

⇩	**PHASE TOC4** **OP: A B -**	Displayed only if targets for this element are active. Example shown.
⇳	**DIGITAL ELEMENT 48:** **LATCHED**	Displayed only if targets for this element are active. Example shown.
	⇩	
⇧		

A target enables the EnerVista UR Setup software to monitor automatically and display the status of any active target messages of all the devices inserted into that site.

Each B30 element with a TARGET setting has a target message that when activated by its element is displayed in sequence with any other currently active target messages in the **TARGETS** menu. In the example shown, the Phase TOC4 and Digital Element 48 target settings are active and so have their targets displayed. The down arrow below the two elements indicates that there can be other active elements beyond these two.

For more information, see the description of target messages in the next section, and the Introduction to Elements section in the Settings chapter for instructions on TARGET setting.

When no targets are active, the display reads **NO ACTIVE TARGETS**.

7.2.1 Target messages

When there are no active targets, the first target to become active causes the display to immediately default to that message. If there are active targets and the user is navigating through other messages, and when the default message timer times out (i.e. the keypad has not been used for a determined period of time), the display again defaults back to the target message.

The range of variables for the target messages is described below. Phase information is included if applicable. If a target message status changes, the status with the highest priority displays.

Table 7-1: Target message priority status

Priority	Active status	Description
1	OP	element operated and still picked up
2	PKP	element picked up and timed out
3	LATCHED	element had operated but has dropped out

If a self test error is detected, a message appears indicating the cause of the error. For example UNIT NOT PROGRAMMED indicates that the minimal relay settings have not been programmed.

7

7.2.2 Relay self-tests

7.2.2.1 Description

The relay performs a number of self-test diagnostic checks to ensure device integrity. The two types of self-tests (major and minor) are listed in the following tables. When either type of error occurs, the Trouble LED Indicator turns on and a target message displays. All errors record an event in the event recorder. Latched errors can be cleared by pressing the **RESET** key, providing the condition is no longer present.

Major self-test errors also result in the following:

- The critical fail relay on the power supply module de-energizes
- All other output relays de-energize and are prevented from further operation
- The faceplate In Service LED indicator turns off
- A RELAY OUT OF SERVICE event is recorded

To view error messages in EnerVista software:

1. Access **Actual Values > Records > Event Records**.

7.2.2.2 Major self-test error messages

The major self-test errors are outlined in this section.

EQUIPMENT MISMATCH:
with 2nd line detail

- *Latched target message*: No.
- *Description of problem*: The configuration of modules does not match the order code stored in the B30. For example, "Card F8L Missing" means that hardware module 8L is missing from slot F inside the UR device.
- *How often the test is performed*: On power up. Afterwards, the backplane is checked for missing cards every five seconds.
- *What to do*: Check all modules against the order code, ensure they are inserted properly, and cycle control power. If the problem persists, contact the factory.

FLEXLOGIC ERROR:
with 2nd line detail

- *Latched target message*: No.
- *Description of problem*: A FlexLogic equation is incorrect.
- *How often the test is performed*: The test is event driven, performed whenever FlexLogic equations are modified.
- *What to do*: Finish all equation editing and use self tests to debug any errors.

UNIT NOT PROGRAMMED:
Check Settings

- *Latched target message*: No.
- *Description of problem*: The **PRODUCT SETUP ⇨⇩ INSTALLATION ⇨ RELAY SETTINGS** setting indicates the B30 is not programmed.
- *How often the test is performed*: On power up and whenever the **PRODUCT SETUP ⇨⇩ INSTALLATION ⇨ RELAY SETTINGS** setting is altered.
- *What to do*: Program all settings and then set **PRODUCT SETUP ⇨⇩ INSTALLATION ⇨ RELAY SETTINGS** to "Programmed."

MODULE FAILURE___:
Contact Factory (xxx)

- *Latched target message*: Yes.
- *Description of problem*: Module hardware failure detected. Module Failures 1 to 11 are major. The system can reboot for four of these, as follows.

  MODULE FAILURE 06 — Event message reads SYSTEM INTEGRITRY RECOVERY 06 when a reboot was required and otherwise MODULE FAILURE 06 when a failure was detected

  MODULE FAILURE 07 — Event message reads SYSTEM INTEGRITRY RECOVERY 07 when a reboot was required and otherwise MODULE FAILURE 07 when a failure was detected

  MODULE FAILURE 08 — Event message reads SYSTEM INTEGRITRY RECOVERY 08 when a reboot was required and otherwise MODULE FAILURE 08 when a failure was detected

  MODULE FAILURE 11 — Event message reads SYSTEM INTEGRITRY RECOVERY 11 when a reboot was required and otherwise MODULE FAILURE 11 when a failure was detected
- *How often the test is performed*: Module dependent.
- *What to do*: Generate the Service Report and provide it to GE customer service. The "xxx" text identifies the failed module (for example, F8L).

UNIT NOT CALIBRATED:
with 2nd line DSP slot number

- *Latched target message*: Yes.

- *Description of problem*: DSP module is not calibrated or calibration data is out of range.
- *How often the test is performed*: On relay startup.
- *What to do*: The respective DSP module has to be replaced, contact factory service.

RAM FILESYSTEM FAIL:
Self-Test Error

- *Latched target message*: Yes.
- *Description of problem*: The relay failed to create the RAM file system.
- *How often the test is performed*: On relay startup.
- *What to do*: Contact factory service.

TO INSTALL SETTINGS:
CHECK LOG AND REBOOT

- *Latched target message*: Yes.
- *Description of problem*: Certain settings require a reboot to be applied, for example DNP settings, IEC 104 settings. After a CID file was send to the relay, a manual reboot of the relay is required to apply those settings that require a reboot
- *How often the test is performed*: A new CID is sent and it include changes in settings that require a reboot to be applied.
- *What to do*: Restart relay.

7.2.2.3 Minor self-test error messages

Most of the minor self-test errors can be disabled. See the settings in the User-programmable Self-tests section in chapter 5.

MODULE FAILURE___:
Contact Factory (xxx)

- *Latched target message*: Yes.
- *Description of problem*: Module hardware failure detected. Module Failures 12 and 31 to 33 are minor.
- *How often the test is performed*: Module dependent.
- *What to do*: Contact the factory and supply the failure code noted in the display. The "xxx" text identifies the failed module (for example, F8L).

  For Module Failure 31, a new process card hardware is available. The process card hardware has been enhanced to support new features, such as fast distance protection, Synchrophasors Frequency, and Rate of Change of Frequency calculations to conform to C37.118 - 2005 standard. The new functionality leveraging the hardware is supported with firmware revision 7.25 and above. When using an older revision of the process card with a new firmware revision (7.25), Module Failure 31 indicates the limited functionality. If your application requires the new functionality, then new process card hardware is required and otherwise you can continue using the existing hardware. To know the revision of your hardware, contact the factory.

  Module Failure 33 means that the number of Breaker Restrike elements enabled is higher than the number of installed DSP modules. The additional elements are not functional and trigger the module failure. Do not enable more Breaker Restrike elements than the number of installed DSP modules, or upgrade the firmware.

MAINTENANCE ALERT:
Replace Battery

- *Latched target message*: Yes.
- *Description of problem*: The battery is weak or not functioning. It powers the real time clock. This message displays as Battery Fail in the event records. When the battery weakness reaches a critical level, the message displays persistently on the front panel and no front panel key navigation is possible.

- *How often the test is performed*: The battery is monitored every five seconds. The error message displays after 60 seconds if the problem persists.
- *What to do*: Replace the battery as outlined in the Maintenance chapter.

DIRECT RING BREAK:
MAINTENANCE ALERT

- *Latched target message*: No.
- *Description of problem*: Direct input and output settings are configured for a ring, but the connection is not in a ring.
- *How often the test is performed*: Every second.
- *What to do*: Check direct input and output configuration and wiring.

MAINTENANCE ALERT:
Bad IRIG-B Signal

- *Latched target message*: No.
- *Description of problem*: A bad IRIG-B input signal has been detected.
- *How often the test is performed*: Monitored whenever an IRIG-B signal is received.
- *What to do*: Ensure the following:
  - The IRIG-B cable is properly connected.
  - Proper cable functionality (that is, check for physical damage or perform a continuity test).
  - The IRIG-B receiver is functioning.
  - Check the input signal level (it can be less than specification).

  If none of these apply, then contact the factory.

MAINTENANCE ALERT:
Bad PTP Signal

- *Latched target message*: No.
- *Description of problem*: No PTP enabled port has good PTP signal input.
- *How often the test is performed*: Activated when no acceptable signal is being received.
- *What to do*: Ensure the following:
  - The Ethernet cable(s) are properly connected.
  - At least one PTP grandmaster-capable clock is functioning.
  - If a strict power profile (PP) is enabled, that entire network is PP compliant.
  - The network is delivering PTP messages to the relay.

MAINTENANCE ALERT:
SNTP Failure

- *Latched target message*: No.
- *Description of problem*: The SNTP server is not responding.
- *How often the test is performed*: Every 10 to 60 seconds.
- *What to do*: Check that Ethernet cable(s) are properly connected. Check that configuration for the SNTP server corresponds to the actual server settings. Check connectivity to the server (ping the server IP address).

MAINTENANCE ALERT:
4L Discrepancy

- *Latched target message*: No.
- *Description of problem*: A discrepancy has been detected between the actual and desired state of a latching contact output of an installed type “4L” module.

- *How often the test is performed*: Upon initiation of a contact output state change.
- *What to do*: Verify the state of the output contact and contact the factory if the problem persists.

MAINTENANCE ALERT:
Oscillatory GOOSE

- *Latched target message*: No.
- *Description of problem*: A data item in a configurable GOOSE data set is oscillating.
- *How often the test is performed*: Upon scanning of each configurable GOOSE data set.
- *What to do*: Evaluate all logic pertaining to this item.

DIRECT DEVICE OFF:
COMM Path Incomplete

- *Latched target message*: No.
- *Description of problem*: A direct device is configured but not connected.
- *How often the test is performed*: Every second.
- *What to do*: Check direct input and output configuration and wiring.

RxGOOSE FAIL:
Missing messages

- *Latched target message*: No.
- *Description of problem*: One or more RxGOOSE messages are not being received.
- *How often the test is performed*: The self-test is activated when no message is received within the expected time interval, which is the time-to-live time in the previous message. This time can be from milliseconds to minutes.
- *What to do*: Check GOOSE setup.

RXGOOSE OFFLINE:
COMM Path Incomplete

- *Latched target message*: No.
- *Description of problem*: One or more GOOSE devices are not responding.
- *How often the test is performed*: Event driven. The test is performed when a device programmed to receive GOOSE messages stops receiving. This can be from 1 to 60 seconds, depending on GOOSE packets.
- *What to do*: Check GOOSE setup.

TEMP MONITOR:
OVER TEMPERATURE

- *Latched target message*: Yes.
- *Description of problem*: The ambient temperature is greater than the maximum operating temperature (+80°C).
- *How often the test is performed*: Every hour.
- *What to do*: Remove the B30 from service and install in a location that meets operating temperature standards.

SYSTEM EXCEPTION:
Press RESET Key

- *Latched target message*: Yes.
- *Description of problem*: Abnormal restart from modules being removed or inserted while the B30 is powered-up, when there is an abnormal DC supply, or as a result of internal relay failure.
- *How often the test is performed*: Event driven.
- *What to do*: Contact the factory.

MAINTENANCE ALERT:
FIRST ETHERNET FAIL

MAINTENANCE ALERT:
SECOND ETHERNET FAIL

MAINTENANCE ALERT:
THIRD ETHERNET FAIL

- *Latched target message*: Yes.
- *Description of problem*: A link loss detection on an Ethernet port. The link loss is due to unplugging the cable or the switch port being down.
- *How often the test is performed*:
- *What to do*: Check the connection.

WRONG TRANSCEIVER:
Self Test Error

- *Latched target message*: Yes.
- *Description of problem*: The type of SFP does not match the CPU type.

  T-type CPU = All ports support fiber SFPs only

  U-type CPU = Maintenance port needs RJ45 SFP and the other two ports fiber SFPs

  V-type CPU = All ports support RJ45 SFPs only
- *What to do*: A web page "SFP Transceiver Information" is provided. This page displays the type of the SFP in it. This data is to be used with the CPU type to know the cause of the problem.

MAINTENANCE ALERT:
SFP MODULE x FAIL

- *Latched target message*: No.
- *Description of problem*: A faulty SFP or unplugging the SFP would generate this self test.
- *What to do*: The web page "SFP Transceiver Information" described in the previous section applies for this self test as well. The "SFP Module Fail" has higher priority and it suppresses the "Ethernet Fail" target message. The "SFP MODULE FAIL FUNCTION" setting enables/disables this self test. The target for this self test is priority-based, with the third one being the highest priority. For example, if all three SFP modules fail, then the third SFP target is activated. If the third SFP module failure resolves, then the second SFP target is activated.

DOS PARTITION ALARM:
SELF-TEST ERROR

- *Description of problem*: There is a problem with the compact flash memory in the CPU module.
- *How often the test is performed*: On relay power-up and afterwards once every 24 hours.
- *What to do*: Contact the factory.

PROTOTYPE FIRMWARE:
Self Test Error

- *Description of problem*: Seen until the builds is tagged as being 'release candidate' or 'gold' builds.
- *What to do*: Update firmware to either of these builds.

STORAGE MEDIA ALARM:
Self Test Error

- *Description of problem*: The CPU module fails to read from or write to the Compact Flash (CF) card inside the module. The CF card stores certain non-volatile data, such as event records, oscillography and datalogger records, fault report values, and non-volatile actual values. Settings are not stored in CF and hence are unaffected by this self-test.
- *Latched target message*: No.
- *How often the test is performed*: On power up. Afterwards, every time the CPU accesses the CF card for reading or writing.
- *What to do*: Contact the factory.

RRTD COMM FAIL:
Self Test Error

- *Description of problem*: Communications with remote RTD unit (RRTD) or GPM-F failed for longer than 10 seconds.
- *Latched target message*: No.
- *How often the test is performed*: Runs only if "Com2 Usage" is set to RRTD or RRTD&GPM-F. Checked every five seconds.
- *What to do*: Check COM2 port settings, check RS485 cables.

VOLTAGE MONITOR:
with 2nd line detail

- *Description of problem*: The relay detected a problem with the internal voltage rails for longer than 25 seconds.
- *Latched target message*: Yes.
- *How often the test is performed*: Every five seconds.
- *What to do*: Contact GE customer service.

SETTINGS SAVE ERROR:
Contact Factory

- *Description of problem*: The relay failed to store the settings to the flash memory.
- *Latched target message*: Yes.
- *How often the test is performed*: When a setting is changed.
- *What to do*: Contact the factory.

LOW ON MEMORY:
with 2nd line detail

- *Description of problem*: The relay periodically checks the amount of free RAM memory available and the amount of free stack available for each task against pre-defined thresholds. The second line of the self-test indicates which of the tests failed. It asserts this self-test if those tests fail.
- *Latched target message*: Yes.
- *How often the test is performed*: Every five seconds.
- *What to do*: Contact the factory.

7.2.2.4 HardFiber self-test error messages

In addition to those provided by the standard UR-series devices, the UR devices implement HardFiber self-tests. These are listed here. Any abnormal diagnostic condition indicated by the LEDs or the critical failure relay also results in a self-test message, so troubleshooting is described here. For other relays, such at the B95^{Plus}, see that product's instruction manual.

Equipment mismatch major self-test

- *Description of problem*: The number or type of installed hardware modules does not match the order code stored in the CPU. The standard UR-series Equipment Mismatch self-test is extended to cover the possible presence of a Process Card.

- *Severity*: Protection is not available and all contact outputs and shared outputs are de-asserted.
- *What to do*: Check all modules against the order code. Ensure they are inserted properly, and cycle the control power. If a module has intentionally been added or removed use the Update Order Code command to notify the relay that the current module configuration is correct.

Module failure major self-test

- *Description of problem*: UR-series device module hardware failure detected.
- *Severity*: Protection is not available and all contact outputs and shared outputs are de-asserted.
- *What to do*: Contact the factory and supply the failure code noted in the display. Text in the message identifies the failed module (for example, H81). If operated on a Process Card failure, the Module Fail self-test seals-in (latches) till the UR-series device is restarted.

Process bus failure major self-test

- *Description of problem*: Mission critical data is not available via the process bus. An AC quantity is considered critical if both AC bank origins and the crosschecking settings are other than none. This self-test is also initiated by an AC input discrepancy being detected. See the description of the crosschecking setting in this manual for further information. In addition, this self-test can be initiated by user logic responding to loss of critical contact input/output or other data using the Process Bus Failure Operand user-programmable self-test setting. This setting is located in the **Settings > Product Setup > User-Programmable Self Test** menu.
- *Severity*: Protection is not available and all contact outputs and shared outputs are de-asserted.
- *What to do*: First rectify any Process Bus Trouble and Brick Trouble self-test errors. Check the actual value of the operand referenced by the Process Bus Failure Operand setting, and if "On," determine the cause and rectify.

  If the problem persists with the foregoing all clear, the cause must be an AC input discrepancy, which is typically the result of problems in the input signals to the Bricks, or faults in the Brick input conditioning hardware. If the error was annunciated the first time significant signal was encountered, suspect the former cause and check the copper connections external to the Brick. Where multiple UR-series devices have self-test errors, look for common causes.

  To further isolate AC input discrepancy errors, put the relay in test-isolated mode, then one by one, temporally change an AC bank crosschecking setting to none, until the Process Bus Failure clears. Once the problem AC bank has been identified, the values from each of the two Bricks can be examined individually by temporarily mapping each to an AC bank with a single origin.

Process bus trouble minor self-test

- *Description of problem*: Communications problems with one or more Bricks. The text of the message identifies the affected field units. This self-test is initiated by low received signal levels at either the Brick or Process Card end, and by the sustained failure to receive poll responses from the proper Brick.
- *Severity*: This self-test error does not directly inhibit protection. However, the affected Brick inputs/outputs may not be available to the UR-series device.
- *What to do*: Check the field unit actual values. An indication of equipment mismatch means that messages are being received from a Brick, but there is a discrepancy between the settings and the actual Brick serial number, order code, and/or core number. Check that the correct core on the correct Brick is patched through to the correct Process Card port, and that the field unit settings are correct. An indication of communications loss means that no messages are being received. Check that the patching is correct, and that the Brick has power. If that is not the problem, use a professional optical fiber connector cleaning kit to clean both sides of all optical fiber connections from the Process Card through to the affected Brick. If the problem continues after cleaning, consult the factory.

Brick trouble minor self-test

- *Description of problem*: Brick internal self-testing has detected a trouble internal to the Brick.
- *Severity*: This self-test error does not directly inhibit protection. However, some or all of the affected Brick inputs/outputs may not be available to the UR-series device.
- *What to do*: Check the Brick environment for over/under temperatures and the voltage of its power source. If the ambient temperature and supply voltage are within Brick specifications, consult the factory. Troubles resulting from a

Brick output failing to respond to an output command can only be detected while the command is active, and so in this case the target is latched. A latched target can be unlatched by pressing the faceplate reset key if the command has ended, however the output can still be non-functional.

RTD trouble minor self-test

- *Description of problem*: The Brick is reporting that the sensed RTD field connection does not match that of an RTD or the reported DC input value is outside of the RTD temperature range, greater than 250°C (likely open sensor circuit fault) or less than -50°C (likely shorted sensor fault).
- *Latched*: No.
- *What to do*: Check field RTD settings and connections.

TDR trouble minor self-test

- *Description of problem*: The Brick is reporting that the sensed transducer field connection does not match that of a transducer, or the reported DC input value is outside of the set transducer input range, or the minimum value setting is equal to the maximum value setting.
- *Latched*: No.
- *What to do*: Check field transducer settings and connections.

B30 Bus Differential System

Chapter 8: Application of settings

This chapter provides example(s) of use.

8.1 Overview

8.1.1 Introduction

The B30 is a high-speed low-impedance microprocessor-based current differential relay for power system busbars. The relay is limited to six circuits. The B30 incorporates the dynamic bus replica mechanism that allows for protecting buses with circuits interconnectable between various sections but with single current measurement points.

The relay uses a dual-slope dual-breakpoint differential characteristic with the restraint signal created as the maximum among the magnitudes of the circuit connected to the protected bus. The low-impedance operating principle is enhanced by the use of the Saturation Detector and a current directional principle.

This chapter provides an example of setting calculations for a sample bus. The selected example includes various bus configurations to clarify a number of typical situations. Both the bus configuration and numerical data used are not meant to reflect any specific utility practice or design standards.

It is also assumed that the CTs have been selected without considering a B30 application, but the UR settings are to be calculated for proper relay application. The CT data used in this example are kept to a minimum and in a generic form. The CT data does not reflect any particular notation or national standards.

The analysis provided in this chapter has been performed with the following goals:

- The limits of linear operation of the CTs considering zero remanent flux have been determined in order to select the high breakpoint settings of the biased differential characteristic
- The limits of linear operation of the CTs considering a remanent flux of 80% have been determined in order to select the low breakpoint settings of the biased differential characteristic
- Saturation of the CTs has been analyzed in order to select the higher slope of the biased differential characteristic and the high set differential overcurrent setting

The analysis tools and safety margins applied are examples only and do not reflect any particular protection philosophy.

Typically, for the CT saturation related calculations, it is sufficient to consider the weakest (most prone to saturation) CT connected to the bus and the total bus fault current combined with the longest time constant among all the circuits connected to the bus. This chapter provides more detailed analysis (see the Slopes and High Set Threshold section) in order to illustrate the idea of using setting groups to enhance the B30 performance when the bus configuration changes (see the Enhancing Relay Performance section).

8.1.2 Sample busbar and data

The figure shows a double bus arrangement with North and South buses. This station has five circuits (C-1 through C-5) and a tiebreaker (B-7). Circuit C-1 is connected to the North bus; circuits C-2, C-3 and C-4 can be routed to either bus via switches S-1 through S-6; circuit C-5 can be connected to either bus via breakers B-5 and B-6.

Figure 8-1: Sample bus configuration

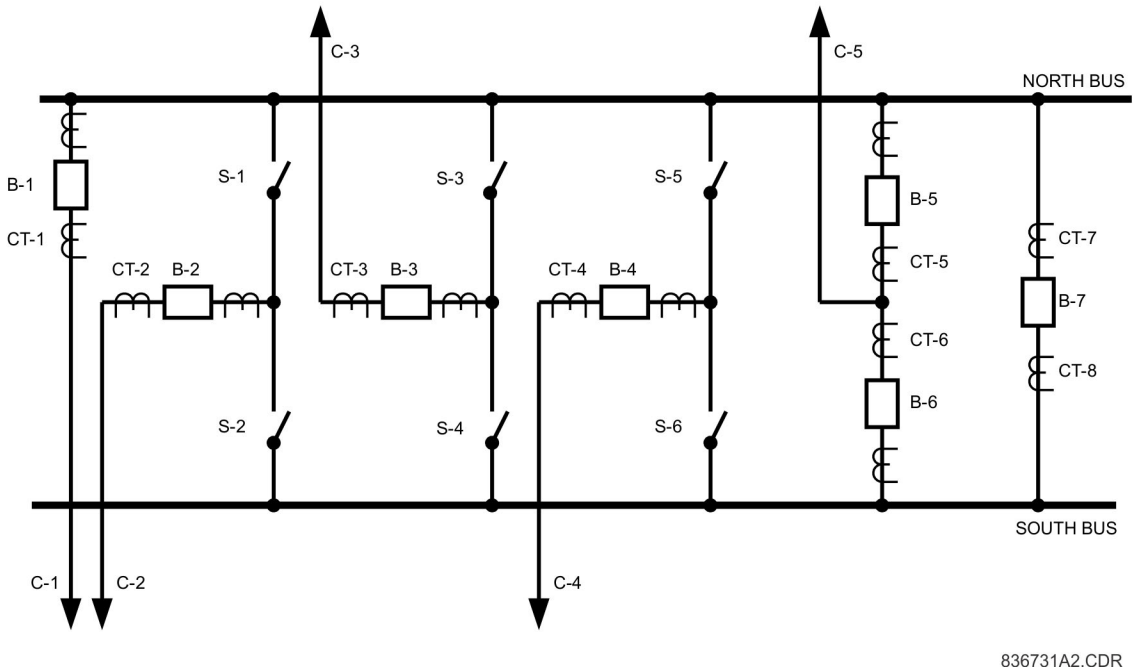

The table shows the assumed short circuit contributions of the connected circuits and their DC time constants.

Table 8-1: Basic fault data of the connected circuit

Circuit	I_{FAULT} (kA)	T_{DC} (ms)
C-1	0.00	N/A
C-2	0.00	N/A
C-3	6.00	5
C-4	5.00	30
C-5	3.00	40

The basic CT data is presented in the following table. The magnetizing characteristics of the three different types of CTs used in this example are shown in the following figure.

Table 8-2: Basic CT data

CT	Ratio	V_{sat} (V)	R_{CTsec} (Ω)	Leads (m)
CT-1	600:5	144	0.34	210
CT-2	600:5	144	0.34	205
CT-3	1200:5	288	0.64	200
CT-4	1000:5	240	0.54	200
CT-5, CT-6	1000:5	240	0.54	180
CT-7, CT-8	1200:5	288	0.64	200

Figure 8-2: Approximate CT magnetizing characteristics

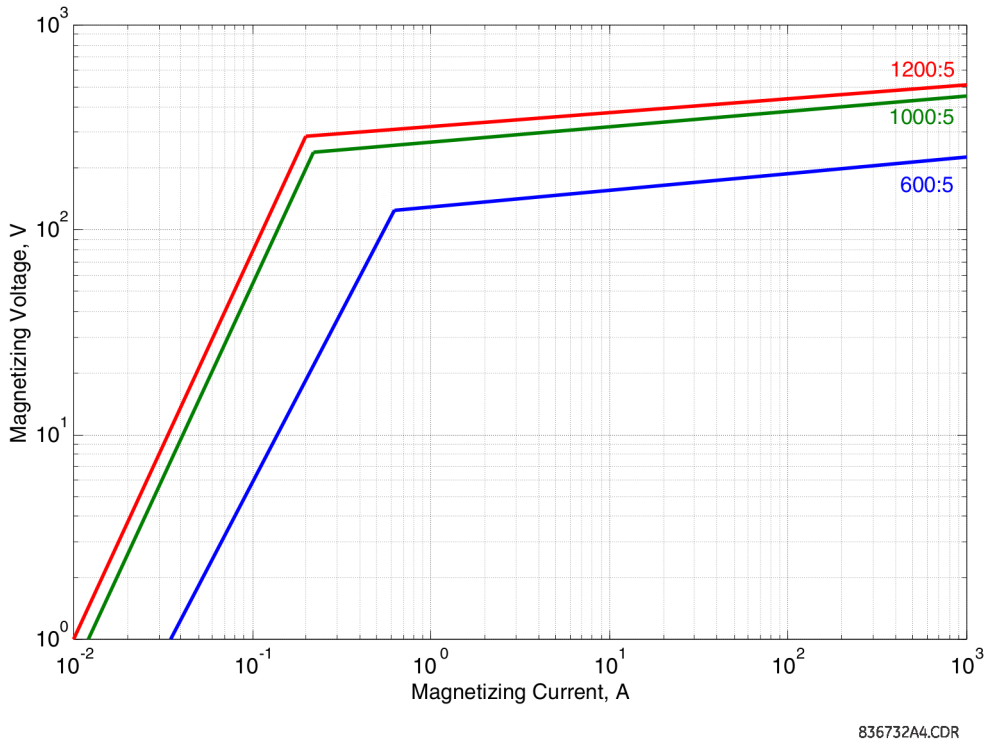

8.2 Zoning and dynamic bus replica

8.2.1 Description

The figures in this section show the adopted protection zoning for the two bus sections.

To provide the bus differential zoning as shown in the figures, eight currents need to be measured. Consequently, the protection cannot be accomplished by one B30. However, as each bus has not more than six connections, two B30s can be used.

8.2.2 North bus zone

With reference to the following diagram, the North bus differential zone is bounded by the following CTs: CT-1, CT-2 (if S-1 closed), CT-3 (if S-3 closed), CT-4 (if S-5 closed), CT-5 and CT-8. The North bus protection is to operate the following breakers: B-1, B-2 (if S-1 closed), B-3 (if S-3 closed), B-4 (if S-5 closed), B-5 and B-7.

Consequently, the B30 for the North bus is wired and configured as follows:

- CT-1 currents are configured as SRC 1 and used as the source 1A of the bus differential zone 1 together with the FlexLogic "On" constant for the status
- CT-2 currents are configured as SRC 2 and used as the source 1B of the bus differential zone 1 together with the status of the S-1 switch
- CT-3 currents are configured as SRC 3 and used as the source 1C of the bus differential zone 1 together with the status of the S-3 switch
- CT-4 currents are configured as SRC 4 and used as the source 1D of the bus differential zone 1 together with the status of the S-5 switch

- CT-5 currents are configured as SRC 5 and used as the source 1E of the bus differential zone 1 together with the FlexLogic "On" constant for the status
- CT-8 currents are configured as SRC 6 and used as the source 1F of the bus differential zone 1 together with the FlexLogic "On" constant for the status
- The trip signal are routed directly to the B-1, B-5 and B-7 breakers while it is supervised by the status of S-1, S-3 and S-5 for the B-2, B-3 and B-4 breakers, respectively

Depending on utility practice, extra security is required with respect to the status signals. This can include bringing in both the normally opened and normally closed contacts of a switch as well as status of a peer switch (S-1 and S-2, for example). If this is the case, set up the required security filtering using FlexLogic and indicate a single (final) status operand for the status signal when setting the bus differential zone.

Figure 8-3: North bus zone

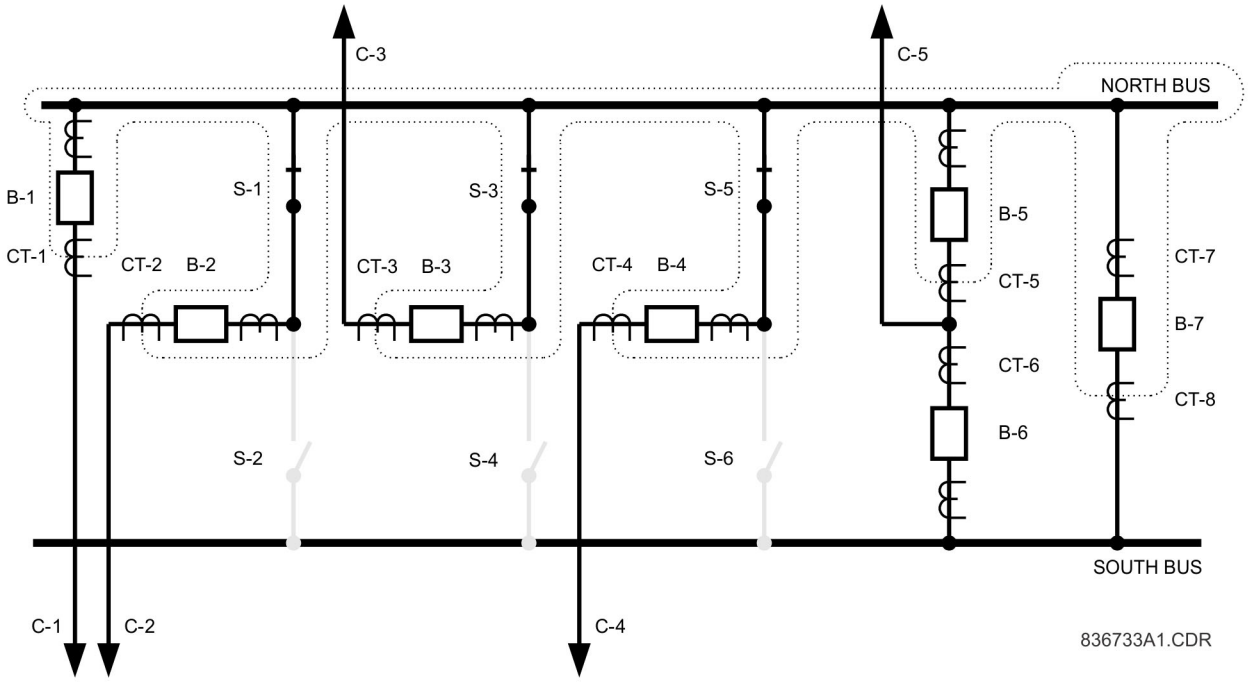

8.2.3 South bus zone

The South bus differential zone is bounded by the following CTs: CT-2 (if S-2 closed), CT-3 (if S-4 closed), CT-4 (if S-6 closed), CT-6 and CT-7. The South bus protection is to operate the following breakers: B-2 (if S-2 closed), B-3 (if S-4 closed), B-4 (if S-6 closed), B-6 and B-7.

Consequently, the second UR for the South bus are wired and configured as follows:

- CT-2 currents are configured as SRC 1 and used as the source 1A of the bus differential zone 1 together with the status of the S-2 switch
- CT-3 currents are configured as SRC 2 and used as the source 1B of the bus differential zone 1 together with the status of the S-4 switch
- CT-4 currents are configured as SRC 3 and used as the source 1C of the bus differential zone 1 together with the status of the S-6 switch
- CT-6 currents are configured as SRC 4 and used as the source 1D of the bus differential zone 1 together with the FlexLogic "On" constant for the status
- CT-7 currents are configured as SRC 5 and used as the source 1E of the bus differential zone 1 together with the FlexLogic "On" constant for the status

- The trip signal are routed directly to the B-6 and B-7 breakers while it is supervised by the status of S-2, S-4 and S-6 for the B-2, B-3 and B-4 breakers, respectively

Figure 8-4: South bus zone

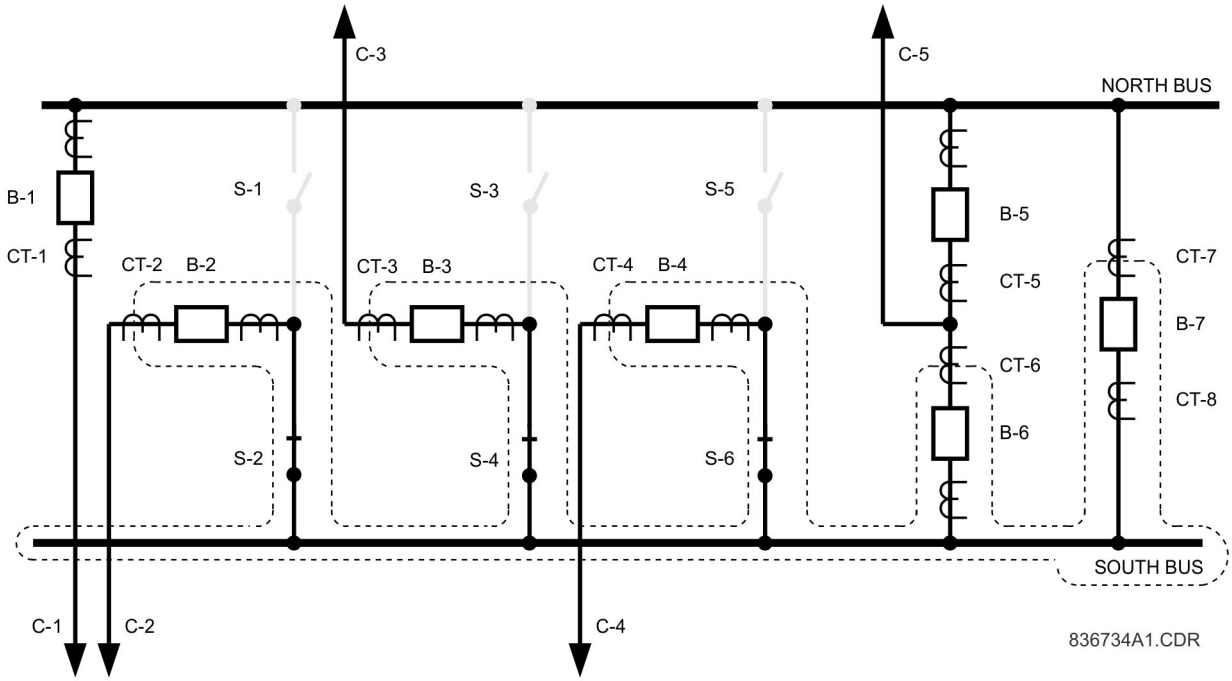

8.3 Biased characteristic breakpoints

8.3.1 Description

The limits of linear operation of the CTs need to be found in order to set the breakpoints of the biased differential characteristic. The settings for the North and South bus relays are analyzed simultaneously from this point on as the two differential zones share some CTs and the results of computations apply to both the relays.

For microprocessor-based relays it is justified to assume the burden of the CTs to be resistive. The limits of the linear operation of a CT, neglecting the effects of the DC component and residual magnetism, can be approximated as follows:

$$I_{max} = \frac{V_{sat}}{R_s}$$ **Eq. 8-1**

where

I_{max} is the maximum secondary current transformed without saturation (AC component only, no residual magnetism),
R_s is the total burden resistance
V_{sat} is the saturation voltage of the CT

The total burden resistance depends on both the fault type and connection of the CTs. For single-line-to-ground faults and CTs connected in Wye, the burden resistance is calculated as:

$$R_s = 2R_{lead} + R_{CTsec} + R_{relay}$$ **Eq. 8-2**

where

R_{lead} is the lead resistance (one way, hence the factor of 2)
R_{CTsec} is the secondary CT resistance
R_{relay} is the relay input resistance

Assuming 0.003 Ω/m lead resistance and approximating the B30 input resistance for the 5A input CTs as 0.2 VA / (5 A)^2 or 0.008 Ω, the limits of the linear operation of the CTs have been calculated and presented in the Limits of Linear Operations of the CTs table.

8.3.2 High breakpoint

As an external fault can happen on any of the connected circuits, threatening saturation of any of the CTs, take the minimum value of the linear operation limit as the **HIGH BPNT** setting. The limit of linear operation that neglects both the residual magnetism and the effect of the DC component should be the base for setting the higher breakpoint of the biased differential characteristic.

The B30 requires the breakpoints to be entered as 'pu' values. The relay uses the largest primary current of the CTs bounding the bus differential zone as a base for the pu settings. Both the North and South buses have the largest primary current of the CTs of 1200 A (CT-7 and CT-8), thus upon configuration of the relays, 1200 A is automatically selected as base for the pu quantities. With a given I_{base} current, the limits of linear operation have been recalculated to pu values as follows:

$$I_{max(pu)} = \frac{I_{max(secondary)}}{I_{base}} \times \text{CT ratio} \qquad \textbf{Eq. 8-3}$$

Table 8-3: Limits of linear operation of the CTS

CT	R_s (Ω)	I_{max} (A sec)	I_{max} (pu) (no remanence)	I_{max} (pu) (80% remanence)
CT-1	1.61	89.55	8.96	1.79
CT-2	1.58	91.25	9.13	1.83
CT-3	1.85	155.84	31.17	6.23
CT-4	1.75	137.30	22.88	4.58
CT-5, CT-6	1.63	147.42	24.57	4.91
CT-7, CT-8	1.85	155.84	31.17	6.23

The third and fourth columns of the table have the following significance.

If an external fault occurs on circuit C-1, then CT-1 carries the fault current. As the fault current is higher than any of the other currents, the current supplied by CT-1 is used as the restraint signal. CT-1 is guaranteed to saturate if the current exceeds 89.55 A secondary, or 17.9 times its rated current, or 8.96 pu of the bus differential zone. Consequently, considering CT-1, the value of 8.96 pu is used as the higher breakpoint of the characteristic.

Considering CTs that can be connected (depending on the positions of the switches) to the North bus, the **HIGH BPNT** for the North bus zone is selected as the minimum of (8.96, 9.13, 31.17, 22.88, 24.57, 31.17), or 8.96 pu.

Considering CTs that can be connected (depending on the positions of the switches) to the South bus, the **HIGH BPNT** for the South bus zone is selected as the minimum of (9.13, 31.17, 22.88, 24.57, 31.17), or 9.13 pu.

8.3.3 Low breakpoint

The DC component in the primary current can saturate a given CT even with the AC current below the suggested value of the higher breakpoint. The relay copes with this threat by using the Saturation Detector and applying a 2-out-of-2 operating principle upon detecting saturation.

The residual magnetism (remanence) left in the core of a CT can limit the linear operation of the CT significantly. It is justified to assume that the residual flux can be as high as 80% of the saturation level leaving only 20% to accommodate the flux component created by the primary current. This phenomenon can be reflected by reducing the saturation voltage in the calculations by the factor of 100% / 20%, or 5. This, in turn, is equivalent to reducing the limit of linear operation by the factor of 5, hence the last column in the Limits of Linear Operations of the CTs table.

For example, if the residual flux left in the core of the CT-1 is as high as 80% of its saturation level, the CT saturates at 17.92 A secondary, or 3.58 times its rated current, or at 1.79 pu of the bus differential zone.

The reduced limit of linear operation is used as the lower breakpoint of the biased differential characteristic (the **LOW BPNT** setting). In this way the interval spanning from the lower to higher breakpoints covers the indistinct area of possible saturation due to the random factor of residual magnetism.

The **LOW BPNT** is set at 1.79 pu for the North bus zone, and at 1.83 pu for the South bus zone.

A combination of very high residual magnetism and a DC component with a long time constant can saturate a given CT even with the AC current below the suggested value of the lower breakpoint. The relay copes with this threat by using a 2-out-of-2 operating mode for low differential currents.

8.4 Slopes and high set threshold

8.4.1 Description

To set the higher slope and threshold of the high set (unbiased) differential operation, external faults must be analyzed. Consider an external fault for the North bus relay. It is justified to assume bus configurations that give maximum stress to the maximum number of CTs. For this purpose we assume the tie breaker, B-7 closed; all the circuitry capable of supplying the fault current to be in service; moreover, they are connected to the South bus in order to analyze the CT-7 and CT-8 carrying the fault current.

8.4.2 External faults on C-1

The following table presents the results of analysis of an external fault on circuit C-1 (C-1 is connected to the North bus; C-3, C-4, and C-5 are connected to the South bus).

For security reasons, it has been assumed that the fault current being a sum of several contributors (C-3, C-4, and C-5 in this case) has a time constant of the DC component of the maximum among the time constants of the contributors. The fault current is supplied from circuits C-3, C-4, and C-5 connected to the South bus, thus through CT-3, CT-4, and CT-6. The current passes through the tie breaker threatening saturation of CT-7 and CT-8.

By comparing the secondary currents (column 3 in the table below) with the limits of linear operation for the CTs (column 4 in the Limits of Linear Operations of the CTs table earlier), it is concluded that CT-1 will saturate during this fault, producing a spurious differential signal for the North bus zone differential protection. All other CTs do not saturate due to the AC components. The amount of the spurious differential current (magnetizing current of CT-1) can be calculated using the burden, magnetizing characteristic and primary current of the noted CT by solving the following equations:

$$I_{relay} = \sqrt{I_s^2 - I_{magnetizing}^2}$$
$$I_{relay} \times R_s = V_{magnetizing}$$

Eq. 8-4

For I_s = 116.67 A, R_s = 1.61 Ω and the characteristic shown earlier in the Approximate CT Magnetizing Characteristics figure, the solution is $I_{magnetizing}$ = 29.73 A, I_{relay} = 112.8 A.

The magnetizing current of the saturated CT-1 appears to the differential element protecting the North bus as a differential signal of 29.73 A, while the restraint signal is the maximum of the bus currents (112.8 A in this case). Consequently, the higher slope of the characteristic should not be lower than 29.73 A / 112.8 A, or 26%, and the pickup of the high set differential elements should not be lower than 29.73 A, or 2.97 pu.

The CTs identified as operating in the linear mode as far as the AC components are considered can, however, saturate due to the DC components. Saturation does not occur if $V_{sat} > I_s \times R_s \times (1 + \omega \times T_{dc})$, where ω is radian system frequency (2πf).

If the above condition is violated, CT time-to-saturate for a full DC saturation can be estimated as follows. The CT saturation factor K_s capability curve is defined as

$$K_S = \frac{\omega \times T_1 \times T_2}{T_1 - T_2}\left[e^{-t/T1} - e^{-t/T2}\right] - \sin(\omega t)$$

Eq. 8-5

8

where

T_1 is a primary system time constant
T_2 is the secondary CT time constant, which can be estimated by the following equation:

$$T_2 = \frac{V_s \times N}{20 \times (\omega \times R_s)} \quad \textbf{Eq. 8-6}$$

where

N is the CT ratio
V_s is the CT voltage at 10 A exciting current obtained from the CT excitation curve

CT limiting factor K_{S_LIM} is defined by the following equation:

$$K_{S_LIM} = \frac{V_s \times N}{I_p \times R_s} \quad \textbf{Eq. 8-7}$$

where

I_p is the maximum CT primary fault current

The figure illustrates the K_s CT saturation capability curve and K_{S_LIM} limiting factor.

Figure 8-5: Determining CT time-to-saturate

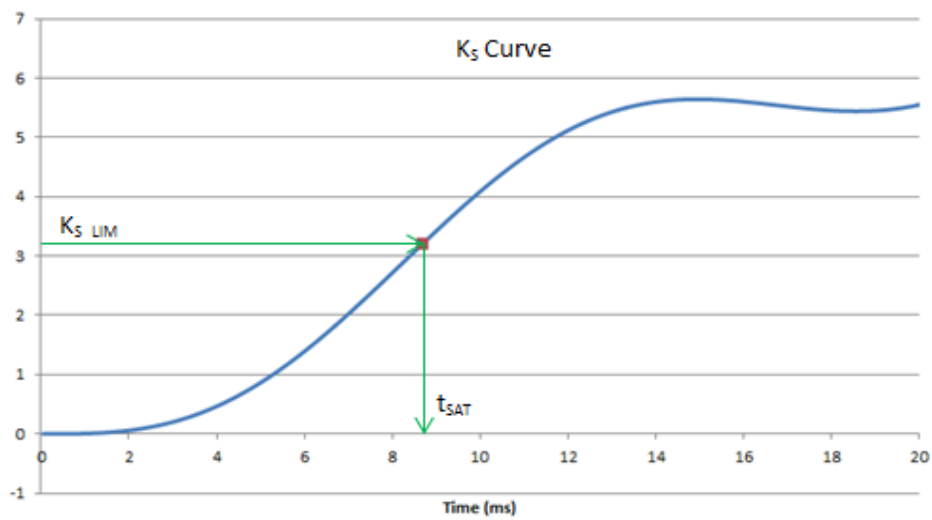

CT time-to-saturate (t_{SAT}) is determined as a projection of the intersection of the K_s CT saturation capability curve and K_{S_LIM} CT limiting factor, as shown in the figure.

Practically, CT time-to-saturate can be obtained by either of the following methods:

- Method 1 — Download the "CT Time-to-Saturate Estimator.xlsm" spreadsheet from the GE Multilin web site, located under Support > Support Documents > B30 Bus Differential System. Enter the required system and CT parameters to obtain the CT time-to-saturate.
- Method 2
  - Define several time instances t_1, t_2...t_n
  - Use equation 8-5 to calculate the corresponding K_{S1}, K_{S2}...K_{Sn}
  - Calculate K_{S_LIM} using equation 8-7
  - Compare each K_S value with K_{S_LIM}. If K_S at the given time instance t_i is less than K_{S_LIM}, it means that true t_{SAT} is greater than t_i, otherwise it is less than t_i

Columns 6 and 7 of the table below summarize the DC saturation threat for the fault on C-1. CT-4, CT-6, CT-7, and CT-8 can saturate due to the DC components and can generate spurious differential signal for both the North and South bus relays depending on the bus configuration. The saturation does not occur before 5.02 ms and is detected by the Saturation Detector.

The transient saturation of the CTs due to the DC component can be neglected when setting the slopes of the characteristic as the saturation is detected and the relay uses the current directional principle. It must, however, be taken into account when setting the high set (unbiased) differential element.

Table 8-4: External fault calculations on C-1

CT	I_{FAULT} (kA)	I_{FAULT} (A sec)	T_{DC} (ms)	AC saturation	DC saturation	t_{SAT} (ms)
CT-1	14.0	116.67	40	Yes	Yes	5.02
CT-2	0	0.00	N/A	No	No	N/A
CT-3	6.0	25.00	5	No	No	N/A
CT-4	5.0	25.00	30	No	Yes	26.37
CT-6	3.0	15.00	40	No	Yes	61.50
CT-7, CT-8	14.0	58.33	40	No	Yes	9.44

8.4.3 External faults on C-2

The following table presents the results of analysis of an external fault on circuit C-2 (C-2 is connected to the North bus; C-3, C-4 and C-5 are connected to the South bus).

By comparing the secondary currents (column 3 in the following table) with the limits of linear operation for the CTs (column 4 shown earlier in the Limits of Linear Operations of the CTs table) it is concluded that CT-2 will saturate during this fault producing a spurious differential signal. All other CTs do not saturate due to the AC components. The amount of the spurious differential current (magnetizing current of CT-2) can be calculated using the burden, magnetizing characteristic, and the primary current of the said CT.

For I_s = 116.67 A, R_s = 1.23 Ω and the characteristic shown earlier in the Approximate CT Magnetizing Characteristics figure, the solution is $I_{magnetizing}$ = 27.69 A, I_{relay} = 113.3 A.

The magnetizing current of the saturated CT-2 appears to the differential element protecting the North bus as a differential signal of 27.69 A, while the restraint signal is the maximum of the bus currents (113.3 A). Consequently, the higher slope of the characteristic should not be lower than 27.69 A / 113.3 A, or 24% and the pickup of the high-set differential elements should not be lower than 27.69 A, or 2.77 pu.

Columns 6 and 7 of the following table summarize the DC saturation threat for the fault on C-2. CT-4, CT-6, CT-7, and CT-8 can saturate due to the DC components and can generate spurious differential signal for both the North and South bus relays depending on the bus configuration. The saturation does not occur before 5.06 ms and is detected by the Saturation Detector.

Table 8-5: External fault calculations on C-2

CT	I_{FAULT} (kA)	I_{FAULT} (A sec)	T_{DC} (ms)	AC saturation	DC saturation	t_{SAT} (ms)
CT-1	0	0.00	N/A	No	No	N/A
CT-2	14.0	116.67	40	Yes	Yes	5.06
CT-3	6.0	25.00	5	No	No	N/A
CT-4	5.0	25.00	30	No	Yes	26.37
CT-6	3.0	15.00	40	No	Yes	61.50
CT-7, CT-8	14.0	58.33	40	No	Yes	9.44

8.4.4 External faults on C-3

The following table presents the results of analysis of an external fault on circuit C-3 (C-3 is connected to the North bus; C-4 and C-5 are connected to the South bus).

By comparing the secondary currents (column 3 in the table below) with the limits of linear operation for the CTs (column 4 in the Limits of Linear Operations of the CTs table shown earlier), it is concluded that none of the CTs saturate due to the AC currents during this fault.

Columns 6 and 7 of the table below summarize the DC saturation threat for the fault on C-3. CT-3, CT-4, CT-6, CT-7, and CT-8 can saturate due to the DC components and can generate a spurious differential signal for both the North and South bus relays depending on the bus configuration. The saturation does not occur before 23.68 ms and is detected by the Saturation Detector.

Table 8-6: Calculations for the external faults on C-3

CT	I_{FAULT} (kA)	I_{FAULT} (A sec)	T_{DC} (ms)	AC saturation	DC saturation	t_{SAT} (ms)
CT-1	0	0.00	N/A	No	No	N/A
CT-2	0	0.00	N/A	No	No	N/A
CT-3	8.0	33.33	40	No	Yes	23.68
CT-4	5.0	25.00	30	No	Yes	26.37
CT-6	3.0	15.00	40	No	Yes	61.50
CT-7, CT-8	8.0	33.33	40	No	Yes	23.68

8.4.5 External faults on C-4

The following table presents the results of analysis of an external fault on circuit C-4 (C-4 is connected to the North bus; C-3 and C-5 are connected to the South bus).

By comparing the secondary currents (column 3 in the table below) with the limits of linear operation for the CTs (column 4 in the Limits of Linear Operations of the CTs table shown earlier), it is concluded that none of the CTs saturate due to the AC currents during this fault.

Columns 6 and 7 of the following table summarize the DC saturation threat for the fault on C-4. CT-4, CT-6, CT-7, and CT-8 can saturate due to the DC components and can generate a spurious differential signal for both the North and South bus relays depending on the bus configuration. The saturation does not occur before 10.03 ms and is detected by the Saturation Detector.

Table 8-7: External fault calculations on C-4

CT	I_{FAULT} (kA)	I_{FAULT} (A sec)	T_{DC} (ms)	AC saturation	DC saturation	t_{SAT} (ms)
CT-1	0	0.00	N/A	No	No	N/A
CT-2	0	0.00	N/A	No	No	N/A
CT-3	6.0	25.00	5	No	No	N/A
CT-4	9.0	45.00	40	No	Yes	10.03
CT-6	3.0	15.00	40	No	Yes	61.50
CT-7, CT-8	9.0	37.50	40	No	Yes	22.23

8.4.6 External faults on C-5

The following table presents the results of analysis of an external fault on circuit C-5 (C-5 is connected to the North bus; C-3 and C-4 are connected to the South bus).

By comparing the secondary currents (column 3 in the table below) with the limits of linear operation for the CTs (column 4 in the Limits of Linear Operations of the CTs table shown earlier), it is concluded that none of the CTs saturate due to the AC currents during this fault.

Columns 6 and 7 of the following table summarize the DC saturation threat for the fault on C-5. CT-4, CT-5, CT-7, and CT-8 can saturate due to the DC components and can generate a spurious differential signal for both the North and South bus relays depending on the bus configuration. The saturation does not occur before 9.45 ms and is detected by the Saturation Detector.

Table 8-8: External fault calculations on C-5

CT	I_{FAULT} (kA)	I_{FAULT} (A sec)	T_{DC} (ms)	AC saturation	DC saturation	t_{SAT} (ms)
CT-1	0	0.00	N/A	No	No	N/A
CT-2	0	0.00	N/A	No	No	N/A
CT-3	6.0	25.00	5	No	No	N/A
CT-4	5.0	25.00	30	No	Yes	26.37
CT-5	11.0	55.00	30	No	Yes	9.45
CT-7, CT-8	11.0	45.83	30	No	Yes	11.54

8.5 Bus differential settings

8.5.1 Description

Taking the previous analysis from this chapter into account, the settings have been calculated as follows.

Table 8-9: North bus differential protection settings

Setting	Value	Comments
PICKUP	0.1 pu	Default value. Lower or higher values can be entered upon security/dependability requirements. The pu value is for the base of 1200A. This means the actual pickup is 120 A primary.
LOW SLOPE	25%	Default value. Lower or higher values can be entered upon security/dependability requirements.
LOW BPNT	1.79 pu	None of the CTs saturate for AC currents below 1.79 pu even with 80% remanence. The DC component, however, combined with the remanence can saturate some CTs even for currents below 1.79 pu. The B30 copes with saturation using the current directional principle.
HIGH SLOPE	60%	Default value. Lower or higher values can be entered upon security/dependability requirements. The value of 60% ensures that the differential characteristic alone (without the directional principle) work correctly under AC saturation of the CTs (26% of spurious differential during the fault on C-1 saturating CT-1).
HIGH BPNT	8.96	None of the CTs saturate for AC currents below 8.96 pu. The DC component, however, can saturate some CTs even for currents below 8.96 pu. The B30 copes with saturation using the current directional principle.
HIGH SET	5.94	The maximum spurious differential current is 2.97 pu. Due to limited accuracy of analysis and the effect of DC saturation a security factor of 2 has been adopted. The highest internal fault current is 14kA, or 11.67 pu giving a good chance to clear a number of faults by the unbiased differential operation.

Table 8-10: South bus differential protection settings

Setting	Value	Comments
PICKUP	0.1 pu	Default value. Lower or higher values can be entered upon security/dependability requirements. The pu value is for the base of 1200A. This means the actual pickup is 120 A primary.
LOW SLOPE	25%	Default value. Lower or higher values can be entered upon security/dependability requirements.
LOW BPNT	1.83 pu	None of the CTs saturate for AC currents below 1.83 pu even with 80% remanence. The DC component, however, combined with the remanence can saturate some CTs even for currents below 1.83 pu. The B30 copes with saturation using the current directional principle.
HIGH SLOPE	60%	Default value. Lower or higher values can be entered upon security/dependability requirements. The value of 60% ensures that the differential characteristic alone (without the directional principle) work correctly under AC saturation of the CTs (24% of spurious differential during the fault on C-2 saturating CT-2).
HIGH BPNT	9.13 pu	None of the CTs saturate for AC currents below 9.13 pu. The DC component, however, can saturate some CTs even for currents below 9.13 pu. The B30 copes with saturation using the current directional principle.

Setting	Value	Comments
HIGH SET	5.54	The maximum spurious differential current is 2.77 pu. Due to limited accuracy of analysis and the effect of DC saturation a security factor of 2 has been adopted. The highest internal fault current is 14kA, or 11.67 pu giving a good chance to clear a number of faults by the unbiased differential operation.

8.6 Enhancing relay performance

8.6.1 Using setting groups

In the example of the South bus, CT-2 is the weakest (most prone to saturation) CT dictating values of some settings. However, CT-2 may not be a part of the South bus protection zone if the S-2 switch is opened. As the position of the switch must be provided for the dynamic bus replica, the status of the switch can be re-used to control the setting groups and apply more sensitive settings if the weakest CT is not part of the bus zone at a given time. For example, if the S-2 switch is opened while the S-6 switch is closed, the CT-4 becomes the weakest CT connected to the South bus. The higher breakpoint (**HIGH BPNT**) could be increased to 22.88 pu (fourth column of the Limits of Linear Operations of the CTs table). The lower breakpoint (**LOW BPNT**) could be increased to 4.58 pu (fifth column of the Limits of Linear Operations of the CTs table). The higher slope (**HIGH SLOPE**) could be decreased as no AC saturation is possible for the South bus CTs (see the external fault calculation tables for each circuit).

The concept could be implemented by using:

- FlexLogic to process the status signals in order to identify the weakest CT
- Setting Groups to switch dynamically from one setting group to another (adaptive settings)

This approach can be extended for buses that do not require the dynamic bus replica mechanism. This can include approximation of the total bus fault current using positions of all switches and breakers and optimizing the settings depending on the amount of stress imposed on the CTs in any particular bus configuration.

B30 Bus Differential System

Chapter 9: Theory of operation

This chapter outlines advanced information on operation.

9.1 Introduction

9.1.1 Bus differential protection

The figure shows that input currents defining (through the dynamic bus replica) the bus differential zone are received by the B30 from current transformers (CTs) associated with the power system.

Figure 9-1: Bus differential protection block diagram

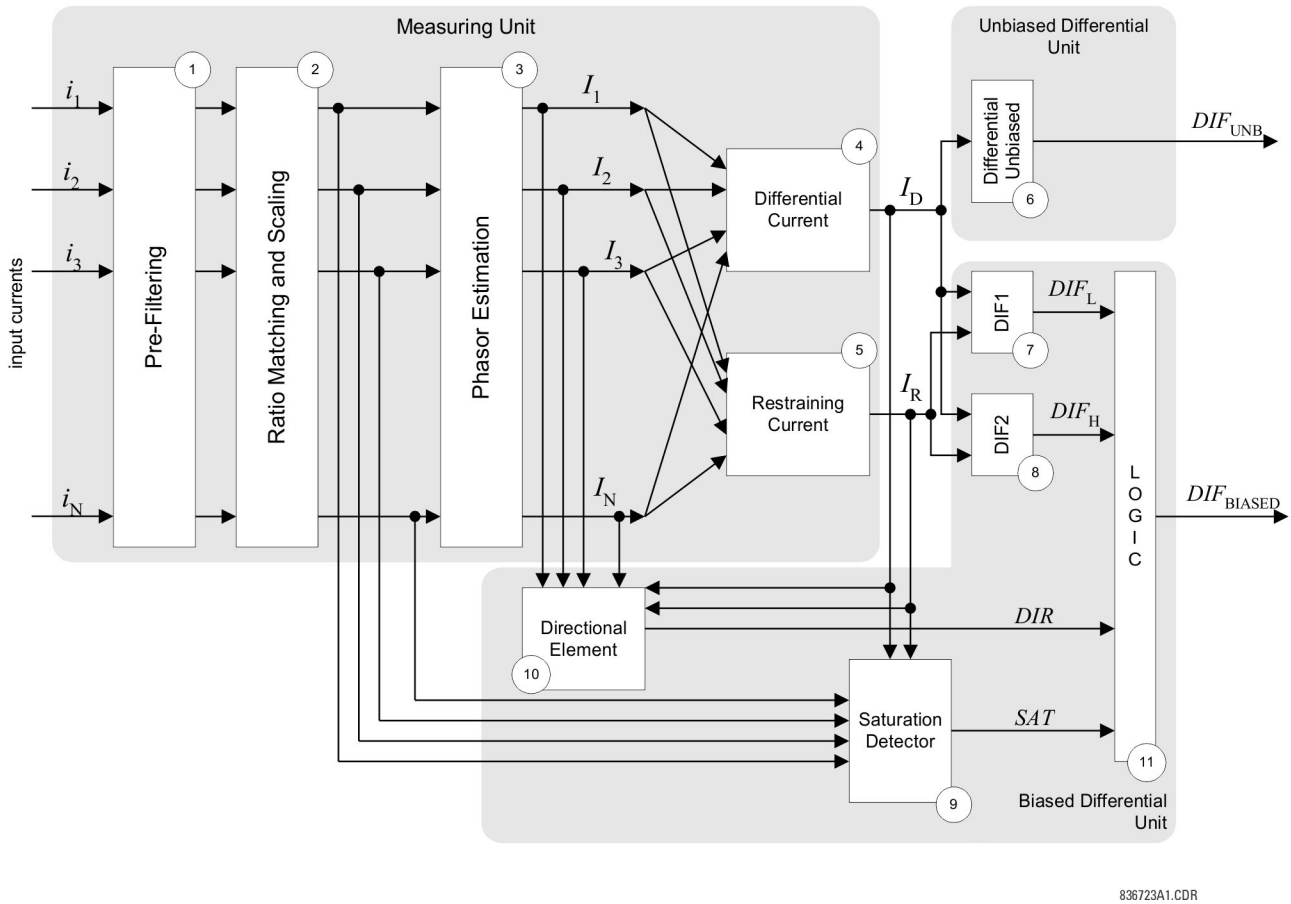

The currents are digitally pre-filtered (Block 1) in order to remove the decaying DC components and other signal distortions.

The filtered input signals are brought to a common scale taking into account the transformation ratios of the connected CTs (Block 2). See the Dynamic Bus Replica section in this chapter.

Phasors of the differential zone currents are estimated digitally (Block 3), and the differential (Block 4) and restraining (Block 5) signals are calculated. See the Differential Principle section.

The magnitude of the differential signal is compared with a threshold, and an appropriate flag indicating operation of the unbiased bus differential protection is produced (Block 6).

The magnitudes of the differential and restraining currents are compared and two auxiliary flags that correspond to two specifically shaped portions of the differential operating characteristic (DIF1 and DIF2) are produced (blocks 7 and 8). The characteristic is split in order to enhance performance of the relay by applying diverse security measures for each of the regions. See the Differential Principle section.

The directional element (Block 10) supervises the biased differential characteristic when necessary. The current directional comparison principle is used that processes phasors of all the input currents as well as the differential and restraining currents. See the Directional Principle section.

The saturation detector (Block 9) analyzes the differential and restraining currents as well as the samples of the input currents. This block sets its output flag upon detecting CT saturation. See the Saturation Detector section.

The output logic (Block 11) combines the differential, directional, and saturation flags into the biased differential operation flag. The applied logic enhances performance of the relay while keeping an excellent balance between dependability/ speed and security. See the Output Logic and Examples section.

9.2 Dynamic bus replica

9.2.1 Dynamic bus replica mechanism

The B30 provides protection for one bus differential zone. The bus differential zone of the B30 allows for protecting bus sections that include circuits that are switchable between different bus sections. Proper relay operation is achieved by associating a status signal with each input current. This mechanism is referred to as a dynamic bus replica.

The dynamic bus zone is programmed as a number of 'source-status' pairs. The Sources feature of the B30 is a convenient and flexible mechanism for associating input currents and voltages with protection and control elements.

The Source mechanism permits summing physical input currents and assigning the resulting sum to a Source. It is not recommended to use this aspect of the Source mechanism for the bus differential protection. If two or more physical currents are summed using the Source mechanism, and then used as an input to the differential protection element, the restraining current calculated by the relay does not always reflect external fault currents properly. Consequently, the relay lacks sufficient bias during certain external faults. Also, the directional principle and saturation detector does not always work properly. This is not a limitation of the B30, but misapplication of Sources in conjunction with the biased differential principle.

Normally, each Source defining the input to the bus differential zone of the B30 is associated with a single physical current transformer bank. The only situation when two or more currents can be summed into a single Source before entering into the bus zone is when the currents are purely load currents and cannot produce any fault current in any circumstances.

The status signal of a given 'source-status' pair of the dynamic bus replica is a FlexLogic operand created to indicate whether or not the associated circuit (current) is connected to the protected bus zone. Normally, the status signals are to be created from input contacts wired to appropriate auxiliary contacts of switches and/or breakers.

9.2.1.1 Example 1

The following figure shows an example of a circuit that can be connected to two separate bus sections. It is assumed that each section is protected individually by two B30s. Consider the B30 as protecting the Bus Section 1. The current signals are connected to the relay using a CT bank, say F1, and assigned to a Source, say SRC 1. The status signal of the switch is brought into the relay as an input contact, say U7a. The input contact can be used directly (say, Cont Ip 1 On), or further processed using the FlexLogic for contact discrepancy filtering or extra security. The pair "SRC 1 - Cont Ip 1 On" defines the input to the Bus Zone 1.

Figure 9-2: Dynamic bus replica mechanism

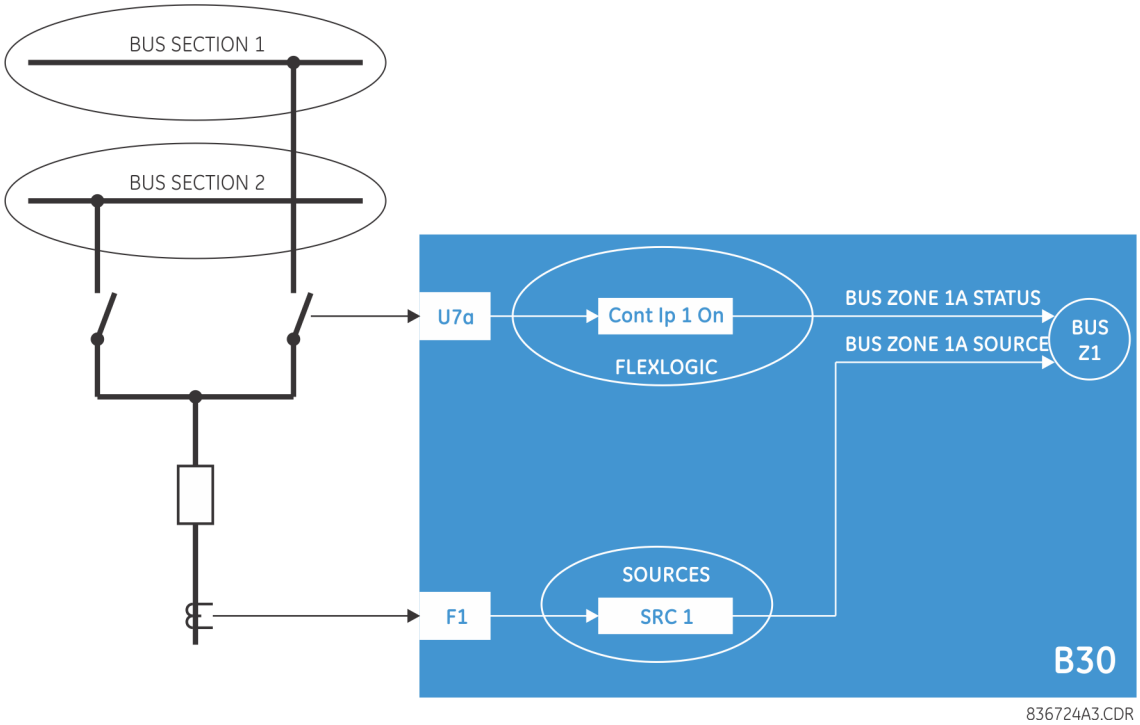

If a given circuit cannot be connected to any power system element other than the protected bus, then fix its status signal using the FlexLogic "On" constant.

9.2.2 CT ratio matching

The B30 allows for using CTs with various rated secondary currents and transformation ratios. Scaling to a common base is performed internally by the relay. The maximum allowable ratio mismatch is 32:1. For proper setting of the differential characteristic, it is imperative to understand the common base used by the relay.

The B30 scales the secondary currents to the maximum primary current among the CTs defining a given bus differential zone: 1 per unit corresponds to the highest rated primary current.

The scaling base is selected automatically by the relay during the configuration phase and is not affected by the dynamic aspect of the bus differential zone. This means that even though the circuit containing the CT with the maximum rated primary current is not connected to a given bus zone at a given time, the scaling base does not change.

9.2.2.1 Example 2

Assume that the CTs installed in the circuit defining the BUS ZONE 1 have the following ratings:

- 1A CT: 600:5
- 1B CT: 500:1
- 1C CT: 600:5
- 1D CT: 1000:5
- 1E CT: 500:1
- 1F CT: 600:5

The maximum of 600, 500, 600, 1000, 500, and 600 is 1000 A, which is selected as the base upon configuration of the BUS ZONE 1. 1 per unit (pu) represents 1000 A primary.

Note that independently from the ratios and rated secondary currents, the per unit values of the differential current retain their original meaning regardless of the distribution of the differential current between individual circuits. Assume, for example that the differential current is fed by the inputs 1A and 1B exclusively, and consider two situations:

- The 1A input supplies 1kA primary, and the 1B input supplies 2kA primary. The currents are in phase. The pu current of the 1A source is 1000 A : (600:5) : 5A/pu = 1.67 pu. The pu current of the 1B source is 2000 A : (500:1) : 1A/pu = 4.00 pu. The pu differential current is (1000A + 2000A) : 1000A = 3.00 pu.
- The 1A input supplies 2kA primary, and the 1B input supplies 1kA primary. The currents are in phase. The pu current of the 1A source is 2000 A : (600:5) : 5A/pu = 3.33 pu. The pu current of the 1B source is 1000 A : (500:1) : 1A/pu = 2.00 pu. The pu differential current is (1000A + 2000A) : 1000A = 3.00 pu.

9.3 Differential principle

9.3.1 Biased differential characteristic

The B30 uses a dual-slope dual-breakpoint operating characteristic as shown in the following figure.

The **PICKUP** setting is provided to cope with spurious differential signals when the bus carries a light load and there is no effective restraining signal.

The first breakpoint (**LOW BPNT**) is provided to specify the limit of guaranteed linear operation of the CTs in the most unfavorable conditions, such as high residual magnetism left in the magnetic cores or multiple autoreclosure shots. This point defines the upper limit for the application of the first slope (**LOW SLOPE**).

The second breakpoint (**HIGH BPNT**) is provided to specify the limits of operation of the CTs without any substantial saturation. This point defines the lower limit for the application of the second slope (**HIGH SLOPE**).

Figure 9-3: Biased operating characteristic

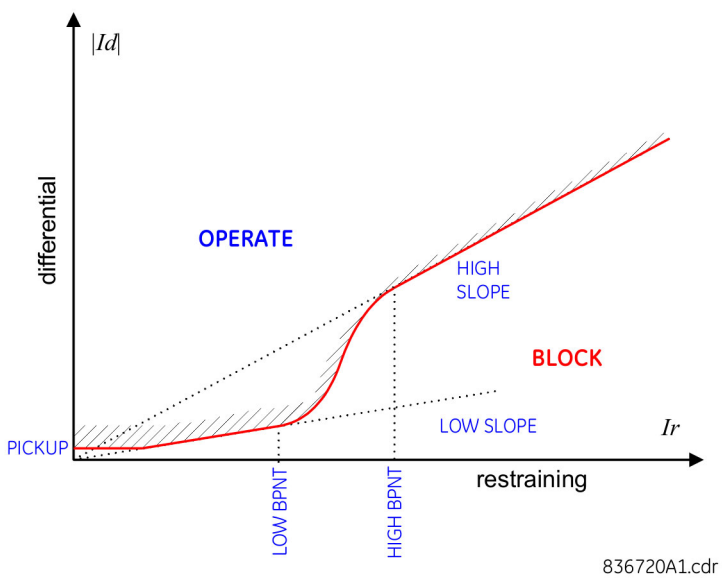

The higher slope used by the B30 acts as an actual percentage bias regardless of the value of the restraining signal. This is so because the boundary of the operating characteristic in the higher slope region is a straight line intersecting the origin of the 'differential - restraining' plane. The advantage of having a constant bias specified by the **HIGH SLOPE** setting creates an obstacle of a discontinuity between the first and second slopes. This is overcome by using a smooth approximation (cubic spline) of the characteristic between the lower and higher breakpoints. Consequently, the characteristic ensures

- A constant percentage bias of **LOW SLOPE** for restraining currents below the lower breakpoint of **LOW BPNT**,
- A constant percentage bias of **HIGH SLOPE** for restraining currents above the higher breakpoint of **HIGH BPNT**, and

- A smooth transition from the bias of **LOW SLOPE** to **HIGH SLOPE** between the breakpoints

9.3.2 Differential and restraining currents

The differential current is produced as a sum of the phasors of the input currents of a differential bus zone taking into account the status signals of the currents, for example applying the dynamic bus replica of the protected zone. The differential current is scaled to the maximum rated primary current. The scaling must be taken into account when setting the **PICKUP** value of the biased differential characteristic and the **HIGH SET** operating point of the unbiased differential function.

The restraining current is produced as a maximum of the magnitudes of the phasors of the zone input currents taking into account the status signals of the currents, for example applying the dynamic bus replica of the protected bus zone. The restraining current is scaled to the maximum rated primary current. The scaling must be taken into account when setting the breakpoints of the biased differential characteristic.

The "maximum of" definition of the restraining signal biases the relay toward dependability without jeopardizing security as the relay uses additional means to cope with CT saturation on external faults. An additional benefit of this approach is that the restraining signal always represents a physical — compared to an "average" or "sum of" — current flowing through the CT that is most likely to saturate during given external fault. This brings more meaning to the breakpoint settings of the operating characteristic.

The following example is provided with respect to the breakpoint settings.

9.3.2.1 Example 3

Proceed with the previous example and assume that taking into account the relevant factors such as properties of the CTs themselves, resistance of the leads, and burden of the CTs, the following primary currents are guaranteed to be transformed without significant saturation:

- 1A CT: 6.0 kA
- 1B CT: 7.5 kA
- 1C CT: 5.0 kA
- 1D CT: 13.0 kA
- 1E CT: 8.0 kA
- 1F CT: 9.0 kA

As having the lowest primary current guaranteeing operation without saturation, the CT associated with the 1C input is most exposed to saturation. During an external fault on the 1C circuit, the 1C CT carries the fault current contributed by potentially all the remaining circuits. The fault current is higher than any contributing current, and therefore, the current of the 1C CT becomes the restraining signal for the biased differential characteristic for external faults on the 1C circuit. Consequently, the higher breakpoint of the differential characteristic (**HIGH BPNT**) needs to be set no higher than 5000 A, where 1000 A = 5 pu (1000 A is the base unit as outlined in the previous the example).

The same approach applies to the setting of the lower breakpoint, **LOW BPNT**.

9.3.3 Enhanced security

To enhance the performance of the B30, the differential characteristic is divided into two regions having diverse operating modes, as shown in following figure.

The first region applies to comparatively low differential currents and has been introduced to deal with CT saturation on low-current external faults. Certain distant external faults can cause CT saturation due to extremely long time constants of the DC component or multiple autoreclosure shots. The saturation, however, is difficult to detect in such cases. Additional security via the "directional check" is permanently applied to this region without regard to the saturation detector.

Figure 9-4: Two regions of differential character

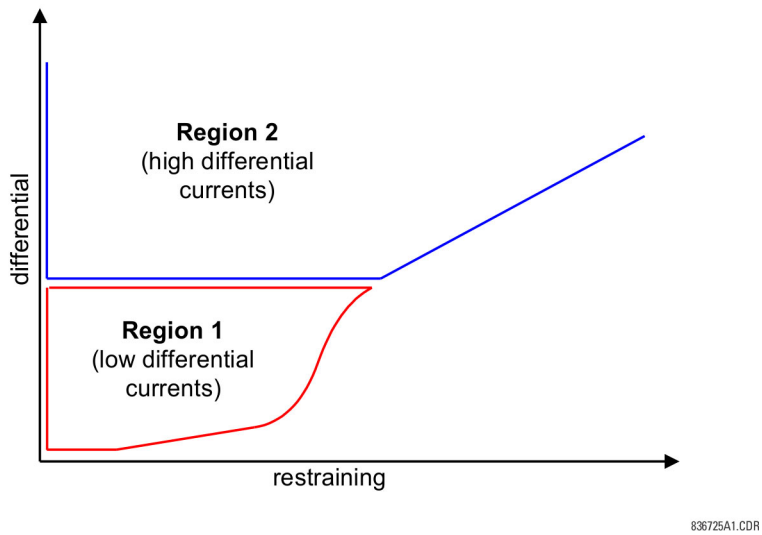

The second region includes the remaining portion of the differential characteristic and applies to comparatively high differential currents. If, during an external fault, the spurious differential current is high enough so that the differential-restraining current trajectory enters the second region, then saturation is guaranteed to be detected by the saturation detector.

The B30 operates in the 2-out-of-2 mode in the first region of the differential characteristic. Both differential and directional principles (Differential Principle and Directional Principle) must confirm an internal fault in order for the biased differential element to operate.

The relay operates in the dynamic 1-out-of-2 / 2-out-of-2 mode in the second region of the differential characteristic. If the saturation detector (see the Saturation Detector section) does not detect CT saturation, the differential protection principle alone is capable of operating the biased differential element. If CT saturation is detected, both differential and directional principles must confirm an internal fault in order for the biased differential element to operate.

Because of diverse operating modes in the first and second regions of the differential characteristic, the user gains double control over the dependability and security issues. The first level includes slopes and breakpoints of the characteristic with regard to the amount of the bias. The second level includes control over the split between the first and second regions of the characteristic.

9.4 Directional principle

9.4.1 Current directional protection

For better security, the B30 uses the current directional protection principle to dynamically supervise the main current differential function. The directional principle is in effect permanently for low differential currents (region 1 in the Two Regions of Differential Characteristic figure) and is switched on dynamically for large differential currents (region 2 in the same figure) by the saturation detector (see the Saturation Detector section) upon detecting CT saturation.

The directional principle responds to a relative direction of the fault currents. This means that a reference signal, such as bus voltage, is not required. The directional principle declares that

- If all of the fault currents flow in one direction, the fault is internal, or
- If at least one fault current flows in an opposite direction compared with the sum of the remaining currents, the fault is external

The directional principle is implemented in two stages.

First, based on the magnitude of a given current, it is determined whether the current is a fault current. If so, its relative phase relation has to be considered. The angle check must not be initiated for the load currents as the direction is out of the bus even during internal faults. The auxiliary comparator of this stage applies an adaptable threshold. The threshold is a fraction of the restraining current. The current from a particular feeder is used for bus directional comparison if its magnitude is greater than max($K \times I_{restraint,\ 0.1\ pu}$) or it is greater than 2 times its CT rating. For bus zones with two feeders, K = 0.2. For bus zones with three to six feeders, K = 0.8 / (N – 1). For bus zones with more than six feeders, K = 0.16.

Second, for the selected fault currents, the phase angle between a given current and the sum of all the remaining currents is checked. The sum of all the remaining currents is the differential current less the current under consideration. Therefore, for each, say the pth, current to be considered, the angle between the I_p and I_D - I_p phasors is to be checked.

Ideally, during external faults, the said angle is close to 180° (as shown); and close to 0 degrees during internal faults.

Figure 9-5: Directional principle operation during external faults

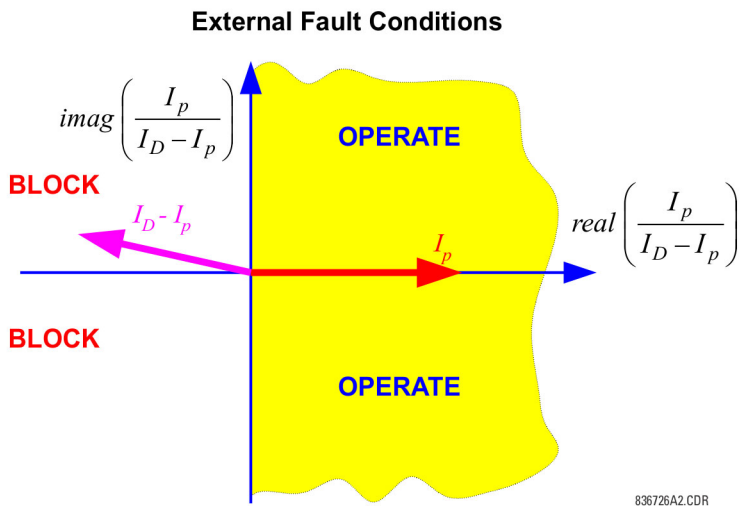

Figure 9-6: Directional principle operation during internal faults

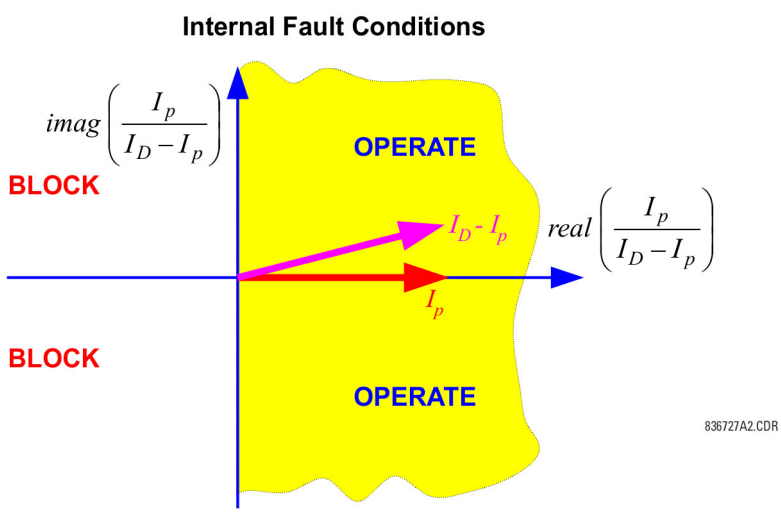

The B30 implementation calculates the maximum angle for the considered currents and compares it against a fixed threshold of 90°. The flag indicating whether the directional protection principle is satisfied is available as the FlexLogic operand BUS 1(2) DIR A/B/C.

9.5 Saturation detector

9.5.1 CT saturation detection

The saturation detector of the B30 takes advantage of the fact that any CT operates correctly for a short period of time, even under very large primary currents that would subsequently cause a very deep saturation. As a result, in the case of an external fault, the differential current stays very low during the initial period of linear operation of the CTs while the restraining signal develops rapidly. Once one or more CTs saturate, the differential current increases. The restraining signal, however, yields by at least a few milliseconds. During internal faults, both the differential and restraining currents develop simultaneously. This creates characteristic patterns for the differential - restraining trajectory, as shown.

Figure 9-7: CT saturation detection internal and external fault patterns

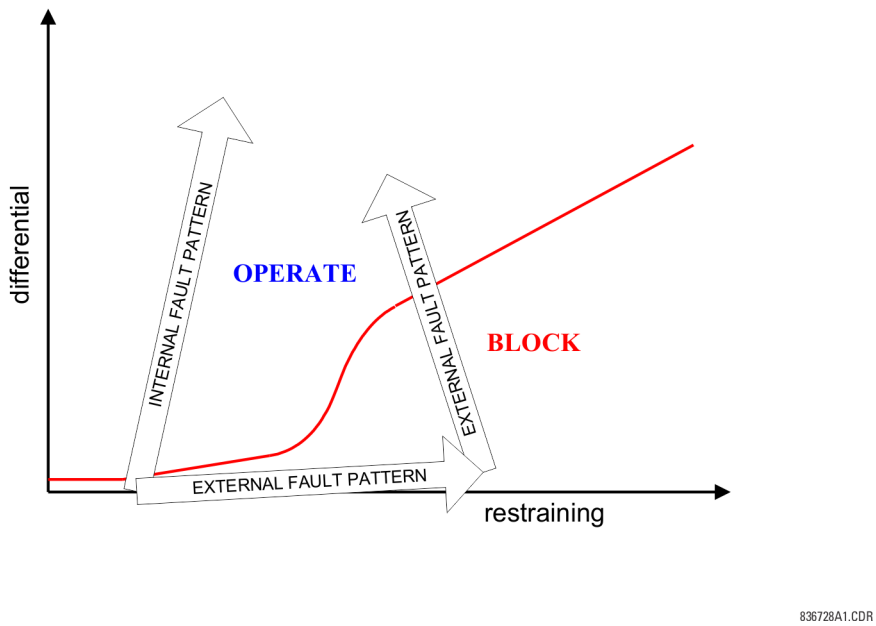

The CT saturation condition is declared by the saturation detector when the magnitude of the restraining signal becomes larger than the higher breakpoint (**HIGH BPNT**) and at the same time the differential current is below the first slope (**LOW SLOPE**). The said condition is of a transient nature and requires a seal-in. A special logic in the form of a "state machine" is used for this purpose as depicted in the following figure on saturation detector state machine.

As the phasor estimator introduces a delay into the measurement process, the aforementioned saturation test fails to detect CT saturation occurring very fast. In order to cope with very fast CT saturation, another condition is checked that uses relations between the signals at the waveform level. The basic principle is similar to that described. Additionally, the sample-based stage of the saturation detector uses the time derivative of the restraining signal (di/dt) to better trace the saturation pattern shown in the following figure.

The saturation detector is capable of detecting saturation occurring in approximately 3 ms from fault inception. The saturation detector, although having no dedicated settings, uses the main differential characteristic for proper operation. This must be kept in mind when setting the characteristic as its parameters must retain their original meaning.

The operation of the saturation detector is available as the FlexLogic operand BUS 1(2) SAT A/B/C.

Figure 9-8: Saturation detector state machine

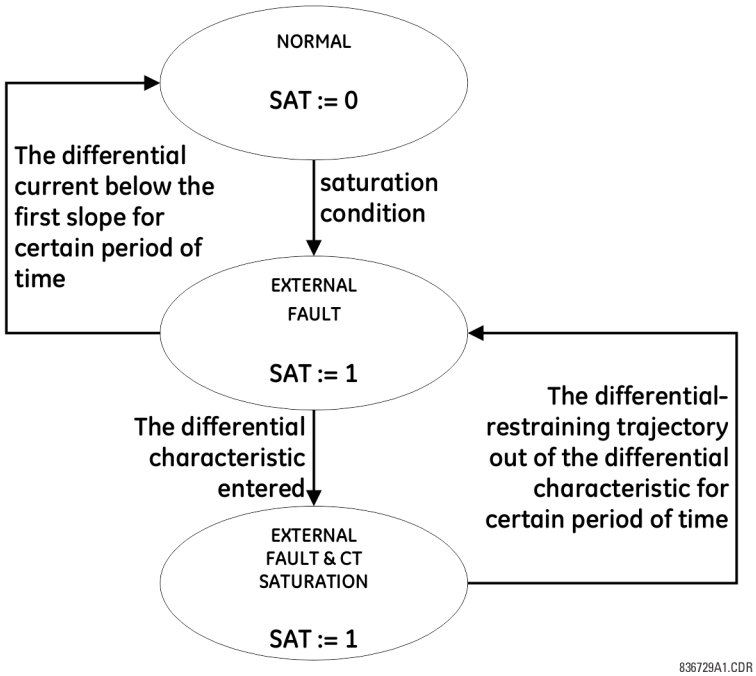

9.6 Output logic and examples

9.6.1 Output logic

The biased differential characteristic uses the output logic shown in the following figure.

For low differential signals, the biased differential element operates on the 2-out-of-2 basis utilizing both the differential and directional principles.

For high differential signals, the directional principle is included only if demanded by the saturation detector (dynamic 1-out-of-2 / 2-out-of-2 mode). Typically, the directional principle is slower, and by avoiding using it when possible, the B30 gains speed.

The dynamic inclusion/exclusion of the directional principle is not applied for the low differential currents but is included permanently only because it is comparatively difficult to reliably detect CT saturation occurring when the currents are small, for example saturation due to extremely long time constant of the DC component or due to multiple autoreclosure actions.

Figure 9-9: Output logic of biased differential protection

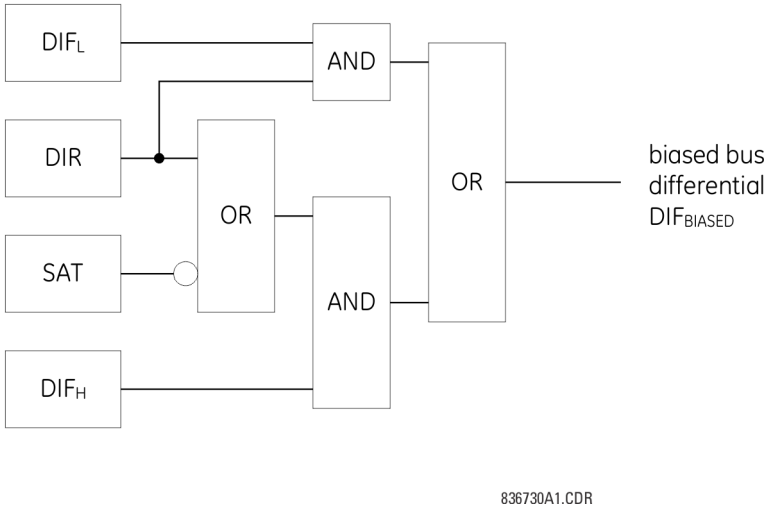

9.6.2 Internal and external fault example

Two examples of relay operation are presented: an external fault with heavy CT saturation and an internal fault.

The protected bus includes six circuits connected to CT terminals F1, F5, M1, M5, U1, and U5, respectively. The circuits F1, F5, M1, M5, and U5 are capable of feeding some fault current; the U1 circuit supplies a load. The F1, F5, and U5 circuits are significantly stronger than the F5 and M1 connections.

The M5 circuit contains the weakest (most prone to saturation) CT of the bus.

The first of the following figures presents the bus currents and the most important logic signals for the case of an external fault. Despite very fast and severe CT saturation, the B30 remains stable.

The second figure presents the same signals but for the case of an internal fault. The B30 trips in 10 ms (fast form-C output contact).

Figure 9-10: External fault example

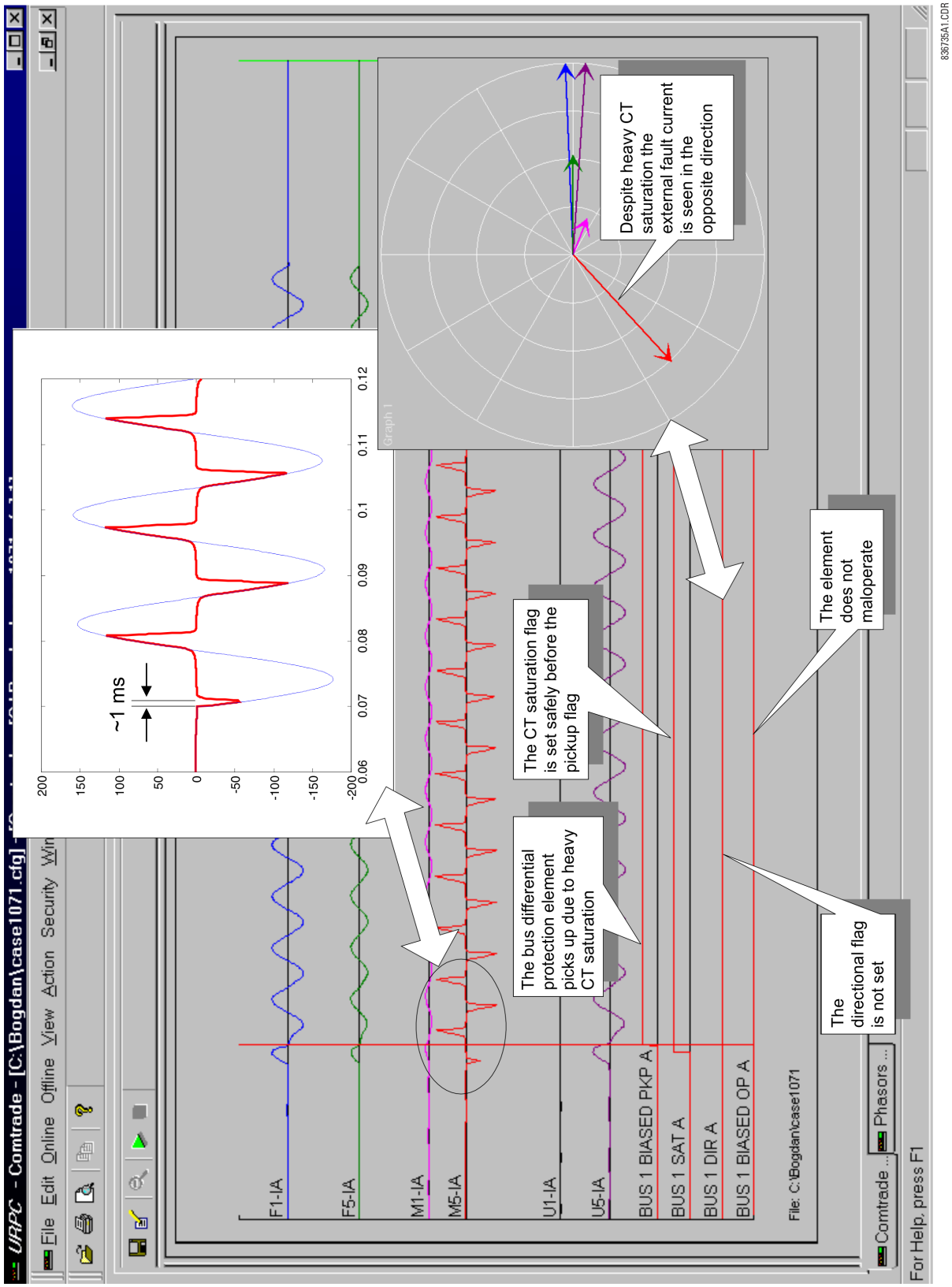

Figure 9-11: Internal fault example

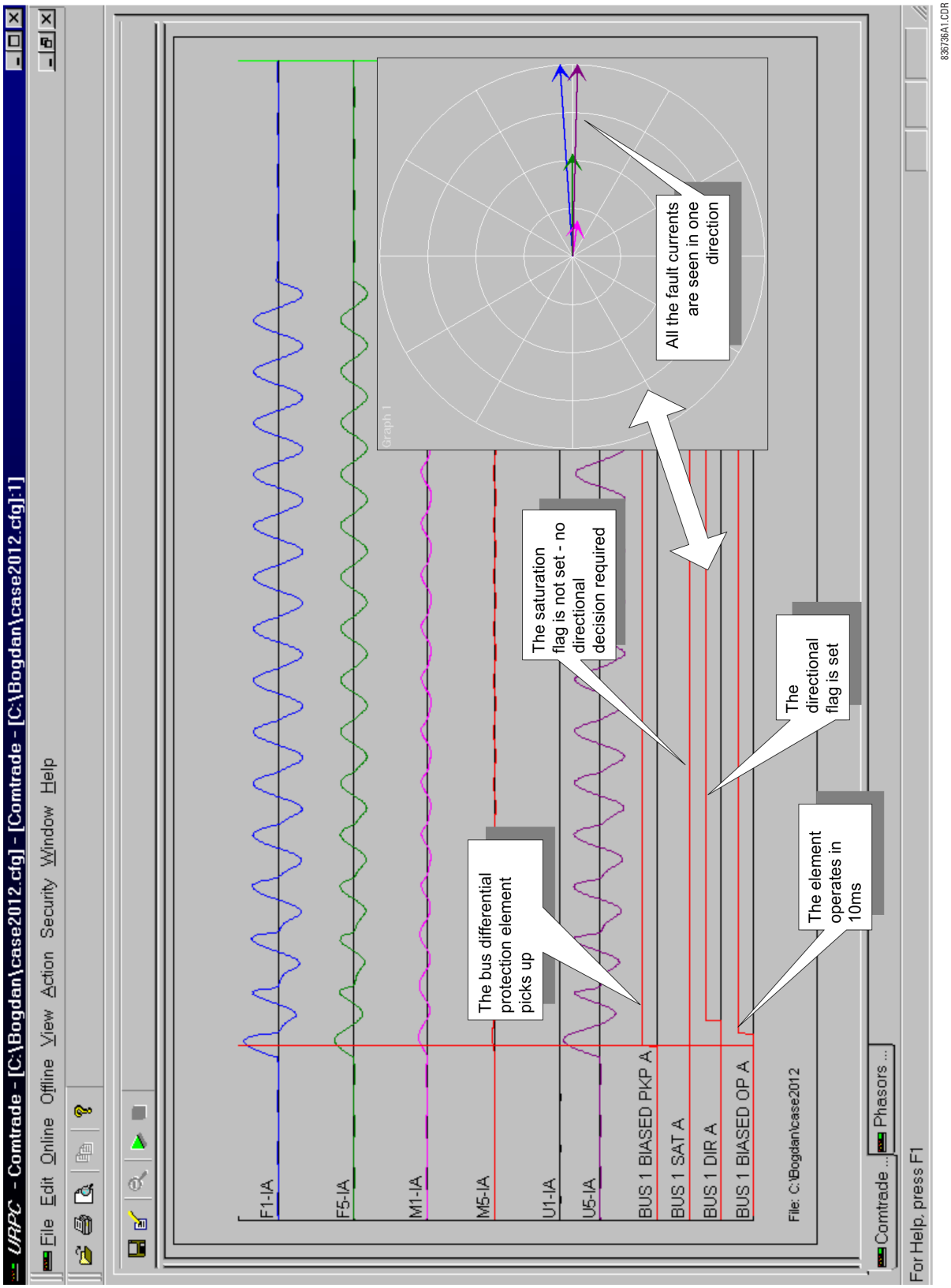

B30 Bus Differential System

Chapter 10: Maintenance

This chapter outlines monitoring, maintenance, repair, storage, and disposal of the hardware and software.

10.1 Monitoring

Devices and data can be monitored.

10.1.1 Devices with Site Targets

To view an overview of devices:

1. Access the **Site Targets** item in the Online Window area, below the list of devices. It can take a few minutes for all devices to be read.
2. Acknowledge any messages for unaccessible devices. The Site Targets window opens when done.

Figure 10-1: Site Targets window

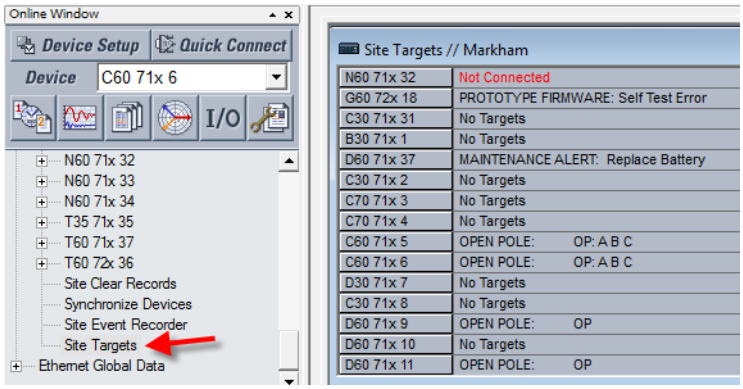

10.1.2 Data with Modbus Analyzer

Use the Modbus Analyzer under **Maintenance > Modbus Analyzer** to monitor the values of the UR device. Use the Modbus memory map addresses outlined in the UR Family Communications Guide for the entries.

The upper part of the window displays values. The lower part of the window is for factory service use.

The first row in the figure shows that Contact Output 1 operation is being monitored. Its Modbus address is CAFA. The actual value read from the device is 0, which means that it is off.

The second row in the figure shows the Contact Output 1 Name. It has a Modbus address of CAF0 and a default value of "Cont Op 1." None of **Selection** column settings render this value because they present the information based on numbering systems.

Figure 10-2: Modbus Analyzer used to monitor actual values on a UR

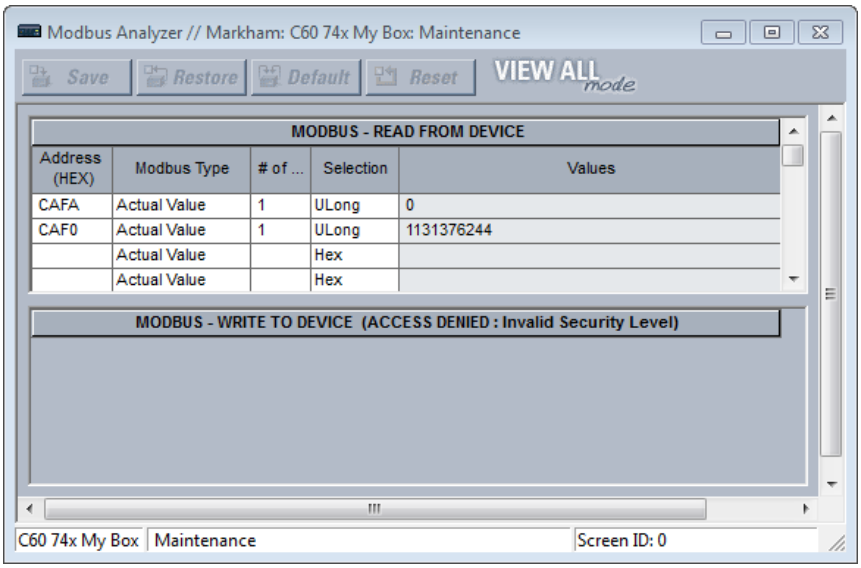

Address (HEX) — Modbus address in hexadecimal. See the Modbus memory map in the UR Family Communications Guide or in the web interface (enter IP address of UR device in a web browser).

Modbus Type
Actual Value — To read the data in the UR device
Setting — To read a setting in the UR device
Coil — To read a command in the UR device

 # of — Element, input, or output to read. An example is 1 for Contact Output 1.

Selection (examples demonstrate various ways to represent 0)
Hex — A decimal numbering system based on 16 possible values, from 0 to 9 and A to F. An example is 0x0000.
Char — A single unicode character, such as C. An example is 0.
Int — A 32-bit number, either positive or negative. An example is 0.
UInt — Unsigned 32-bit integer, which means that it cannot be negative but can be twice as large as a signed integer. An example is 0.
Long — A 64-bit number, either positive or negative. An example is 0.
ULong — Unsigned 64-bit number, which means that it cannot be negative but can be twice as large as a signed 64-bit number. An example is 0.
Float — A numbering system with no fixed number of digits before or after the decimal point. An example is 0.000000.
Binary — A numbering system using 0 and 1. An example is 0000-0000-0000-0000.

Entries are not saved when closing the window.

10.2 General maintenance

The B30 requires minimal maintenance. As a microprocessor-based relay, its characteristics do not change over time. Expected service life is 20 years for UR devices manufactured June 2014 or later when applied in a controlled indoors environment and electrical conditions within specification.

While the B30 performs continual self-tests, it is recommended that maintenance be scheduled with other system maintenance. This maintenance can involve in-service, out-of-service, or unscheduled maintenance.

10.2.1 In-service maintenance

1. Visual verification of the analog values integrity, such as voltage and current (in comparison to other devices on the corresponding system).
2. Visual verification of active alarms, relay display messages, and LED indications.
3. LED test.
4. Visual inspection for any damage, corrosion, dust, or loose wires.
5. Event recorder file download with further events analysis.

10.2.2 Out-of-service maintenance

1. Check wiring connections for firmness.
2. Analog values (currents, voltages, RTDs, analog inputs) injection test and metering accuracy verification. Calibrated test equipment is required.
3. Protection elements setting verification (analog values injection or visual verification of setting file entries against relay settings schedule).
4. Contact inputs and outputs verification. This test can be conducted by direct change of state forcing or as part of the system functional testing.
5. Visual inspection for any damage, corrosion, or dust.
6. Event recorder file download with further events analysis.
7. LED Test and pushbutton continuity check.

NOTICE To avoid deterioration of electrolytic capacitors, power up units that are stored in a de-energized state once per year, for one hour continuously.

10.2.3 Unscheduled maintenance (system interruption)

1. View the event recorder and oscillography or fault report for correct operation of inputs, outputs, and elements.

10.3 Retrieve files

Data, oscillography, log, events, routing, ARP, and other files can be downloaded using the EnerVista software. These files can be requested by technical support staff.

To retrieve a file:

1. If the CyberSentry option is enabled, log in to the EnerVista software using the Administrator role.
2. In the Online Window area of EnerVista, access **Maintenance > Retrieve File**. The window opens.
3. Note the destination folder to which the file is to be saved at the top and change it if required. You can copy the path or open the folder for convenience at this time.
4. Select the file to download from the UR device.

5. Click the **Read File** button. The file is saved to the destination folder. The EnerVista window remains open to download additional files.

10.3.1 CyberSentry security event files

CyberSentry security events are available in the following two files: SECURITY_EVENTS.CSV and SETTING_CHANGES.LOG.

10.3.1.1 Security events file

The figure shows the content for the SECURITY_EVENTS.CSV file.

Figure 10-3: Security events file

	A	B	C	D	E	F	G	H	I	J
1	FORMAT	EVENT_INFO_1	Event Number	Data/Time	Username	IP Address	Role	Activity Value	Change Method	
2		EVENT_INFO_1	71	Feb 08 2016 10:07:20.893820	Observer	10.14.127.1	0	14	5	
3		EVENT_INFO_1	72	Feb 08 2016 10:07:20.931321	Observer	10.14.127.1	0	15	5	
4		EVENT_INFO_1	73	Feb 08 2016 10:07:41.314660	Administrator	10.14.127.1	1	14	5	
5		EVENT_INFO_1	74	Feb 08 2016 10:07:54.383404	Administrator	10.14.127.1	1	10	5	
6		EVENT_INFO_1	75	Feb 08 2016 10:07:58.187574	Administrator	10.14.127.1	1	9	5	
7		EVENT_INFO_1	76	Feb 08 2016 10:08:01.991740	Administrator	10.14.127.1	1	6	5	
8		EVENT_INFO_1	77	Feb 08 2016 10:08:42.908413	Administrator	10.14.127.1	1	6	5	
9		EVENT_INFO_1	78	Feb 08 2016 10:08:43.493822	Administrator	10.14.127.1	1	6	5	
10		EVENT_INFO_1	79	Feb 08 2016 10:09:46.908404	Administrator	10.14.127.1	1	6	5	
11		EVENT_INFO_1	80	Feb 08 2016 10:14:44.958406	Keypad	0.0.0.0	3	14	1	

Time — Local time.

Activity Value — The actual security event.

1 = Authentication Failed
2 = User Lockout
3 = FW Upgrade
4 = FW Lock
5 = Settings Lock
6 = Settings Change, this can fill the entire event log. Hence it is supported by the already existing SETTINGS_CHANGE.LOG file. This event is not required.
7 = Clear Oscillography command
8 = Clear Data Logger command
9 = Clear Demand Records command
10 = Clear Energy command
11 = Reset Unauthorized Access
12 = Clear Teleprotection Counters
13 = Clear All Records
14 = Role Log out
15 = Role Log in

Change Method — Format code F229 for the settings control change method.

0 = None
1 = Keypad
2 = Front port
3 = COM1 (not used)
4 = COM2 (RS485)
5 = Ethernet

10.3.1.2 Setting changes file

The SETTING_CHANGES.LOG file stores all the setting changes. A total of 1024 events are stored in a circular buffer in non-volatile memory.

Figure 10-4: Setting changes file

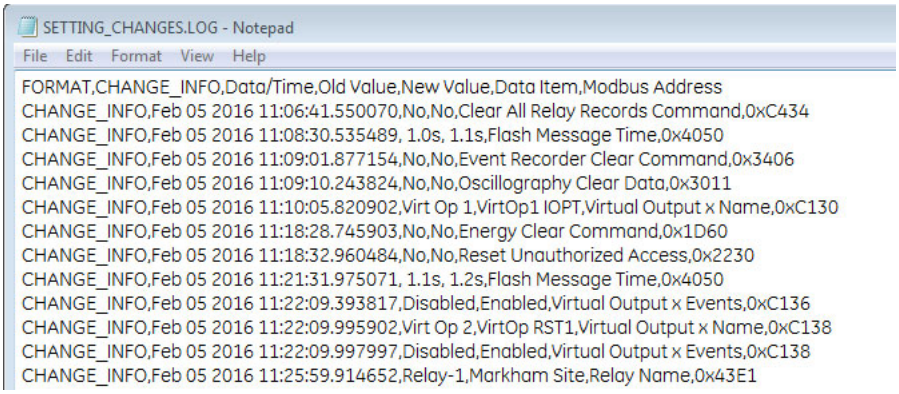

```
SETTING_CHANGES.LOG - Notepad
File  Edit  Format  View  Help
FORMAT,CHANGE_INFO,Data/Time,Old Value,New Value,Data Item,Modbus Address
CHANGE_INFO,Feb 05 2016 11:06:41.550070,No,No,Clear All Relay Records Command,0xC434
CHANGE_INFO,Feb 05 2016 11:08:30.535489, 1.0s, 1.1s,Flash Message Time,0x4050
CHANGE_INFO,Feb 05 2016 11:09:01.877154,No,No,Event Recorder Clear Command,0x3406
CHANGE_INFO,Feb 05 2016 11:09:10.243824,No,No,Oscillography Clear Data,0x3011
CHANGE_INFO,Feb 05 2016 11:10:05.820902,Virt Op 1,VirtOp1 IOPT,Virtual Output x Name,0xC130
CHANGE_INFO,Feb 05 2016 11:18:28.745903,No,No,Energy Clear Command,0x1D60
CHANGE_INFO,Feb 05 2016 11:18:32.960484,No,No,Reset Unauthorized Access,0x2230
CHANGE_INFO,Feb 05 2016 11:21:31.975071, 1.1s, 1.2s,Flash Message Time,0x4050
CHANGE_INFO,Feb 05 2016 11:22:09.393817,Disabled,Enabled,Virtual Output x Events,0xC136
CHANGE_INFO,Feb 05 2016 11:22:09.995902,Virt Op 2,VirtOp RST1,Virtual Output x Name,0xC138
CHANGE_INFO,Feb 05 2016 11:22:09.997997,Disabled,Enabled,Virtual Output x Events,0xC138
CHANGE_INFO,Feb 05 2016 11:25:59.914652,Relay-1,Markham Site,Relay Name,0x43E1
```

10.4 Convert device settings

Settings files can be upgraded or downgraded to other firmware versions. For example, version 7.4 settings can be upgraded to version 7.6.

Settings are reset to factory default upon conversion.

To convert settings:

1. If not already in the Offline Window area, right-click the online device in the EnerVista software and select the **Add Device to Offline Window** option. This copies the settings to the Offline Window area. Any message about file repair usually means that settings were missing in the original file and have been added with default values to the new file.
2. Make a copy of the settings file in the Offline Window area by right-clicking the file and selecting **Duplicate Device**. A copy of the file is made and the file name start with "Copy of." Optionally rename the file by right-clicking it and selecting the **Rename Device** option.
3. Convert the settings by right-clicking one of the files in the Offline Window and selecting the **Convert Device Settings** option.

   GE recommends converting settings in firmware steps, for example when converting from 6.0 to 7.4x, convert first to 7.0 then 7.4 in order to follow embedded conversion rules and keep settings.

   The settings convert and a report generates.

Figure 10-5: Upgrade settings

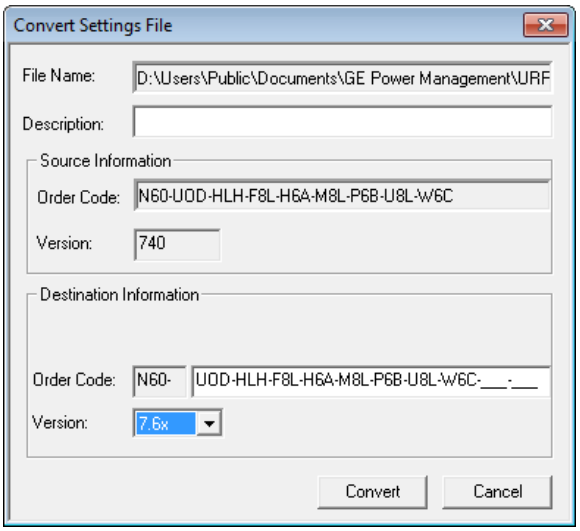

4. Review the conversion report. The values of all settings that have been defaulted during conversion are not listed in the conversion report; to find the value of a setting before conversion, inspect the device backup file made before conversion.

   In the example shown here, settings have been reset to factory defaults and several settings are new in firmware version 7.6 under **Settings > System Setup > Switches** and **Breakers**.

Figure 10-6: Conversion report

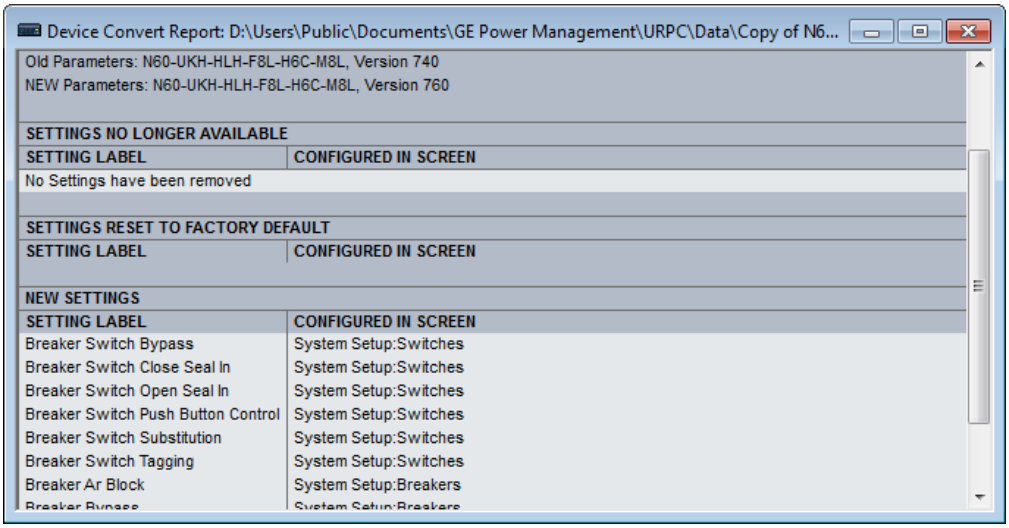

5. Change settings in the new file, for example by looking at the original file.
6. Write the converted file to the device, for example by dragging and dropping from the Offline Window to the Online Window.
7. Check settings and operation. Additional configuration is required when using IEC 61850; manual checking of files is required.

10.5 Copy settings to other device

Settings from one B30 device can be copied to another B30 device for rapid deployment. The order codes must match. See the Settings File section at the beginning of the Interfaces chapter for a list of settings not deployed, such as IP address.

To apply settings to another device:

1. Right-click the device in the Online window and select the **Add Device to Offline Window** option. A window opens.
2. Check the file path and name the file, then click the **Receive** button. An example is to save the files in D:\Users\Public\Public Documents\GE Power Management\URPC\Data\ and to name the source device B30_Deployment. At the prompt, confirm the action. The settings are saved in .cid, .icd, and .urs files, and the entry displays in the Offline window area.
3. Right-click the device in the Offline window area and select the **Duplicate Device** option. The device is copied with a prefix of "Copy of." Multiple duplicates results in files being named "Copy of Copy of" for example, which can be avoided by deleting the folder copies from the path shown on mouse-over.
4. Right-click the copied device and rename it.
5. Right-click the copied device and select the **Edit Device Properties** option. Make the changes for the new device.
6. Send the file to new device by dragging and dropping it into the Online Window area. Or right-click and select the **Write Settings to Device** option.
7. Update the remaining settings, such as IP address.

10.6 Compare settings

Settings can be compared against default values and between two UR devices.

Some of the IEC 61850 settings use floating point data, which guarantees accurate representation of real numbers up to seven digits. Numbers with more than seven digits are approximated within a certain precision. This can result in differences between what is entered and what is saved, and for example results in differences shown on a settings comparison report.

10.6.1 Compare against defaults

To compare settings against default values:

1. Right-click the device in the Offline Window area and select **Compare Settings With Defaults**. The file generates and the number of differences displays.
2. To save the report, click **File > Save As**, select the TXT, PDF, or CSV format from the drop-down list, and enter a name for the file.

In the figure, the first entry (red) is from the device, while the second (green) is the default value.

Figure 10-7: Device settings compared with default values

#		Setting Name	Group	Module	Item	Value
1	-	Contact Input Debounce Time	1	1	1	2.0 ms
2	+	Contact Input Debounce Time	1	1	1	6.0 ms
3	-	Contact Input Debounce Time	1	2	1	2.0 ms
4	+	Contact Input Debounce Time	1	2	1	6.0 ms
5	-	Contact Input Debounce Time	1	3	1	2.0 ms
6	+	Contact Input Debounce Time	1	3	1	6.0 ms

10.6.2 Compare two devices

Preferences can be set under **File > Preferences** as follows:

- **Comparison Report: Sequential File 1, File 2 Layout** — When disabled (default), the report shows only what differs, as shown in the previous figure. When enabled, the report indicates differences by device.

Figure 10-8: Device settings compared between two devices, displayed sequentially

```
1,  File2 , Existing 7.40 IEC61850 settings removed., ____, New IEC61850 settings added with default values.
2,  File2 , Bkr Phase A Open, 1__1__1, 0 (OFF)
3,  File2 , Bkr Phase B Open, 1__1__1, 0 (OFF)
4,  File2 , Bkr Phase C Open, 1__1__1, 0 (OFF)
5,  File2 , Breaker Restrike Block, 1__1__1, 0 (OFF)
6,  File2 , Breaker Restrike Block, 1__2__1, 0 (OFF)
7,  File2 , Breaker Restrike Brk Open, 1__1__1, 0 (OFF)
8,  File2 , Breaker Restrike Brk Open, 1__2__1, 0 (OFF)
9,  File2 , Breaker Restrike Cls Cmd, 1__1__1, 0 (OFF)
10  File2 , Breaker Restrike Cls Cmd, 1__2__1, 0 (OFF)
```

There are two ways to compare devices: devices in the Offline area or between Online and Offline devices.

To compare settings of two devices in the Offline Window area:

1. Right-click a first device in the Offline Window area and select **Compare Two Devices**.
2. In the window that opens, select a second device and click the **Receive** button. The file generates and the number of differences displays.
3. To save the report, click **File > Save As**, select the TXT, PDF, or CSV format from the drop-down list, and enter a name for the file.

To compare settings between Online and Offline devices:

1. Right-click a device in the Online Window area and select **Compare with Device**.
2. In the window that opens, enter a path/file name at the bottom o f the window.
3. Select the second device.
4. Click the **OK** button. The file generates, and the differences are highlighted in red, which is for the first device.

10.7 Back up and restore settings

Back up a copy of the in-service settings for each commissioned UR device, so as to revert to the commissioned settings after inadvertent, unauthorized, or temporary setting changes are made, after the settings defaulted due to firmware upgrade, or when the device has to be replaced. This section describes how to backup settings to a file and how to use that file to restore the settings to the original relay or to a replacement relay.

10.7.1 Back up settings

The following file types can be saved:

- URS — UR settings file — When the IEC 61850 option is not present
- IID — Instantiated IED capability description file — Actual settings on UR
- ICD — IED Capability Description file — Default settings on UR
- CID — Configured IED description file — Settings sent to the UR (may or may not contain the present settings)

UR device settings can be saved in a backup URS file using the EnerVista UR Setup software. The URS file is the standard UR settings file. For an introduction to settings files in the URS format, see the beginning of the Interfaces chapter. When the IEC 61850 option is present, the settings can be saved alternatively in a backup IID file either using the EnerVista UR Setup software in online mode or by using any of the supported file transfer protocols. The IID file is one of several IEC 61850 Substation Configuration Language (SCL) file types; see the IEC 61850 chapter in the UR Series Communications Guide for an introduction to SCL.

"TBD" displays when a setting in a modeled element is configured with a non-modeled operand. For example, Phase IOC is modeled in a firmware release, while the LED operands are not modeled. If the block setting of the Phase IOC is configured with LED operands, its displays as TBD in IID and CID files, the web interface, or in an MMS client.

The options that display in the EnerVista software when right-clicking depend on device options.

Preferences are set in the **File > Preferences > IEC 61850** menu. There are two options as follows:

- **Preserve custom attributes when importing SCD/CID files** — Applies to the **Add Device to Offline Window** option. When enabled, the IID file also is to be copied to the computer. The IID file that is retrieved from the relay is therefore assumed to be in synchronization with the resulting .urs file, and in fact in this situation the IID file on the computer is a copy of the IID file that was read from the online device. When disabled, the IID file on the computer is to be left unchanged. The location of the IID file is C:\ProgramData\GE Power Management\urpc\Offline, for example.
- **Do not update IID file when updating SCL files** — When enabled (default), an IID file is not to be created on the computer and if one is already present there, it is neither removed nor updated. Have this option enabled when you want to keep the IID file from the UR device instead of from another tool. The location of the file is C:\ProgramData\GE Power Management\urpc\Offline, for example.

An Environment backup stores a list of sites and devices in the Online and Offline Window areas. Settings files are not contained within the environment file. If a settings file is moved, renamed, or deleted after the backup, it is removed from the Offline Window during the restore.

To save a settings file in the URS format in EnerVista Online Window:

1. In EnerVista, connect to the device in the Online Window area.
2. Right-click the device name in the Online Window area and select **Add Device to Offline Window**. A window opens.
3. Select or enter a file name and location, and click the **Receive** button. A .urs file is created in the Offline Window area.

To create a new settings file in the URS format in EnerVista Offline Window:

1. In EnerVista, right-click in the Offline Window area and select **New Device**. A window opens.
2. Change the file name at the end of the **Path** field, keeping the .urs extension.
3. From the **Associate File with Device** drop-down list, select the UR device. Other fields complete automatically. Otherwise, when you do not select a device from the drop-down list, all fields need to be completed manually and only devices that match the entered order code and version display in the list.
4. The **Serial # Lock** field is the serial number of the intended device. It ensures that the settings file is sent only to the specific relay that matches the serial number.
5. Click the **OK** button to create the .urs file in the Offline Window area.

To save settings in the IID format in EnerVista Online Window:

1. In EnerVista, connect to the device in the Online Window area.
2. Right-click the device name in the Online Window area and select **Read IID File**. The option is not present when the device does not have the IEC 61850 option. A window opens when successful.
3. Select or enter a file name and location, and click the **Receive** button. A .iid file is created.

To save settings in the IID format in EnerVista Offline Window:

1. In EnerVista, right-click the device in the Offline Window area.
2. Select the **Create IID File** option for firmware below 7.3. The option is not always available. Select the **Save As** option for firmware 7.3 and later, and select the IID option from drop-down list.

   No file is generated. The IID file on the computer is copied to the location specified.
3. If the **Do not update IID file when updating SCL files** preference is enabled under **File > Preferences > IEC 61850**, then a message displays to that effect. This means that there is no IID file available on the computer to be copied, so a new one is generated.

To save settings in the IID format using TFTP:

1. On a computer on the same subnetwork as the UR device, open a command window.
2. Enter

   ```
   TFTP <IP address> GET ur.iid <destination>
   ```

   where

   <IP address> is the IP address of the UR device
   ur.iid is the internal name of the IID file in the UR device
   <destination> is the path and file name of the IID file. If omitted, the file is saved as ur.iid in the command window default directory.

   An example is

   ```
   TFTP 192.168.1.101 GET ur.iid Feeder1.iid
   ```

To save settings in the ICD format in EnerVista Online Window:

1. In EnerVista, right-click the device in the Online Window area.
2. Select the **Read ICD File** option. A window opens.
3. Enter a path/name for the file, and click the **Save** button.

To save settings in the ICD format in EnerVista Offline Window:

1. In EnerVista, right-click the device in the Offline Window area.
2. Select the **Create ICD File** option. Or select the **Save As** option, and select the ICD option from drop-down list.

   You can be prompted to specify if the file is for firmware version 7.12 or later.

   The file is saved to the location specified.

To save settings in the CID format in EnerVista Online Window:

1. In EnerVista, right-click the device in the Online Window area.
2. Select the **Read ICD File** option. A window opens.
3. Enter a path/name for the file, and click the **Save** button.

To save settings in the CID format in EnerVista Offline Window:

1. In EnerVista, right-click the device in the Offline Window area.
2. Select the **Save As** option, which displays for firmware 7.3 and later, and select the CID option from the drop-down list.

   The file is copied from the computer to the location specified.

To save list of sites and devices with an Environment backup:

1. In EnerVista, click **File > Environment > Backup**. A window opens.
2. Name and save the .ENV file.

10.7.2 Restore settings

UR device settings can be restored to the values they were at when a URS backup file was created using the EnerVista UR Setup software. When the IEC 61850 option is present, the settings can alternatively be to the values they were at when an IID type backup was created either using the EnerVista UR Setup software in online mode or by using any of the supported file transfer protocols. Note that TFTP cannot be used here, as TFTP "put" mode is disabled for security reasons.

To restore completely, a few settings need to be entered manually either via EnerVista UR Setup or via the UR device front panel. If the restore operation is to be via Ethernet, first the UR device must have its IP address settings entered via the front panel. These are located at **SETTINGS ⇨ PRODUCT SETUP ⇨⇩ COMMUNICATIONS ⇨⇩ NETWORK 1(3)** and **SETTINGS ⇨ PRODUCT SETUP ⇨⇩ COMMUNICATIONS ⇨⇩ IPv4 ROUTE TABLE 1(6) ⇨ DEFAULT IPv4 ROUTE ⇨ GATEWAY ADDRESS**.

When importing a file, it cannot have a blank numeric value. All numeric values must be non-blank, otherwise the file is rejected.

URS and IID procedures are outlined here.

To restore settings from a URS file:

1. In EnerVista, connect to the device in the Online Window area.
2. Right-click the .urs file in the Offline Window area and select **Add Device from File** to locate a file, and/or drag-and-drop the file from the Offline Window area to the device in the Online Window area.

Figure 10-9: Restoring a URS settings file

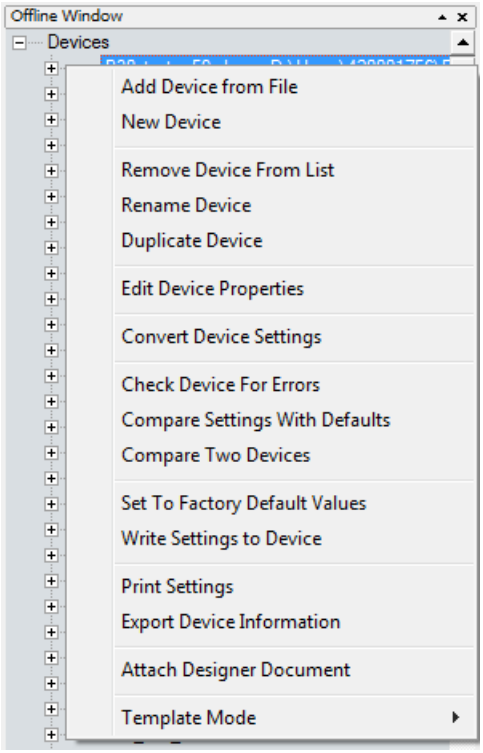

3. Two prompts are possible, first that the URS file does not include the complete IEC 61850 configuration and that it needs to be recreated if you continue. This means that the URS file is from UR version 7.30 or higher, has the IEC 61850 software option in the order code, but any IEC 61850 content will be compromised and will need to be configured.

   Second, a message can display that the URS file is part of a device folder and to use the device's CID file. This means that the URS file is from UR version 7.3 or higher, has the IEC 61850 software option in the order code, and is part of the device folder. The user is trying to add a URS file from inside a device's folder. Instead, the user needs to use the CID file from the device folder.

   These messages display because the roles of the protection engineer and network engineer can be separate. The former can require a URS file, while the latter can require stored Modbus settings and protection schemes.
4. Manually copy the remaining settings, outlined as follows.

To restore settings from an IID file using EnerVista software:

1. In Windows, make a copy of the .iid backup file, and change the extension to .cid on the new copy.
2. In the Online Window area of the UR EnerVista Setup software, connect to the device to establish communication.

3. In the Offline Window area, right-click **Devices** and select **Import Devices from SCD**.

Figure 10-10: Importing an SCD or CID file

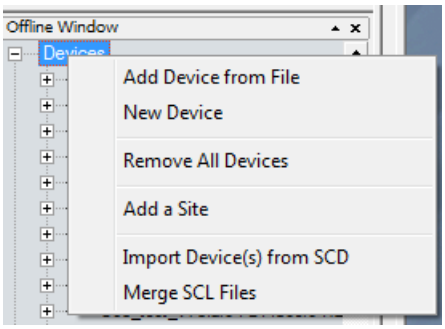

4. Navigate to and select the file with .cid extension. When prompted, enter a file name to give to an intermediate URS file. The URS file is added to the Offline Window area.
5. Drag the imported file in the Offline Window to the device in the Online Window. Note that the **RELAY SETTINGS** value also is written to a device, and the accepting relay is put into "Programmed" or "Not Programmed" mode as configured in the offline file.
6. Manually copy the remaining settings, outlined as follows.

To restore settings from an IID using SFTP:

1. Close EnerVista UR Setup software.
2. In Windows, make a copy of the .iid backup file, and change the extension to .cid on the new copy.
3. On a computer on the same subnetwork as the UR device, open an SFTP client application, such as WinSCP. Note that TFTP cannot be used here.
4. Use the device's IP address as the host name.
5. If the device has the CyberSentry option, use the User Name of "Administrator" or "Engineer," and the password programmed for the selected role. The default password is "ChangeMe1#" (without quotation marks). Log in to the device.
6. If the device does not have the CyberSentry option, use the User Name of "Setting," and the password programmed for the Setting role. The default password is "ChangeMe1#" (without quotation marks). Log in to the device.
7. Upload the backup file copy with the .cid extension. WinSCP uses drag-and-drop or copy-and-paste for this file transfer.
8. Manually copy the remaining settings, outlined as follows.

To manually copy remaining settings:

1. Settings listed in section 4.1.2 Settings Files are not transferred to the UR device with settings files. Enter them manually either via the front panel or via EnerVista UR Setup software. The values that these settings had at the time the backup was created are contained within the backup file, accessed through EnerVista UR Setup software.

To restore the list of sites and devices from an Environment backup:

1. In EnerVista, click **File > Environment > Restore**. A window opens.
2. Select the .ENV file to restore.

10.8 Upgrade software

In general, the latest releases of the EnerVista software can be used with all firmware versions, for example EnerVista software released for UR 7.4 can be used to access multiple UR devices that have version 7.4x, 7.2x, and 6.0x firmware installed.

Existing installations do not need to be uninstalled before upgrade.

You can also downgrade the software; use the same procedure.

To upgrade the EnerVista software:

1. If a beta version of the EnerVista UR Setup software is installed, uninstall it, for example using the Windows Control Panel.
2. Download the latest EnerVista software and/or firmware from http://www.gegridsolutions.com/app/ViewFiles.aspx?prod=urfamily&type=7
3. Double-click the file and complete the wizard. The software installs.
4. Access the software and check the version number under **Help > About**. If the new version does not display, try uninstalling the software and reinstalling the new versions.

A message can display about a version not being supported. An example is when upgrading from version 7.12K to 7.4x. The 7.12K entry is removed from the Offline Window area.

A message can display in the EnerVista software upon launch that "a device from the environment was not recognized." This means that a device is online and its firmware version conflicts with the software version. In the example shown, a C60 with firmware version 7.5x is online, but the software version is 7.3x. Updating removed incompatible files and changed the device to version 7.3x, after which you need to make the order codes consistent as outlined next.

Figure 10-11: Mismatch in order code between software and device

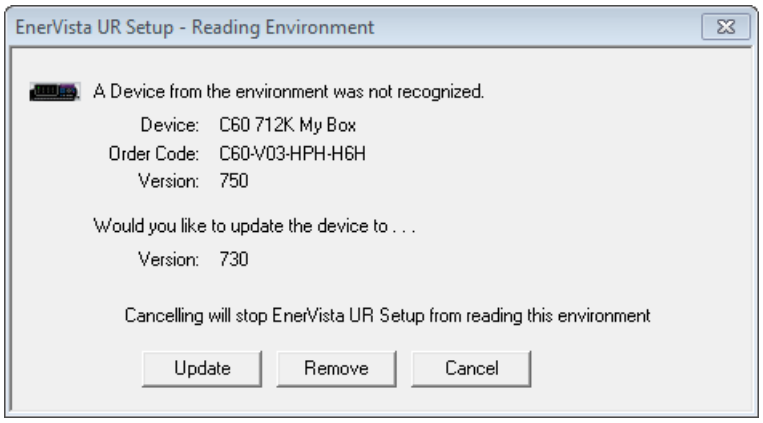

To make the order codes consistent:

1. In EnerVista, click the **Device Setup** button. The window opens.
2. Expand the entry for the UR device.
3. Click the **Read Order Code** button. The order code and version of the device are populated to the software.
4. Click the **OK** button to save the change.

10.9 Upgrade firmware

If upgrading both EnerVista software and B30 firmware, upgrade the software first.

The firmware of the B30 device can be upgraded, locally or remotely, using the EnerVista software.

Upgrades are possible for the same release (such as 7.01 to 7.02) and from one firmware version to another (such as 7.2 to 7.3). When upgrading to another firmware version, check the release notes on the GE Multilin website for compatibility.

If you are upgrading from version 7.0 or 7.1 to 7.2 or later, some CPU modules require a new boot version. Update this first.

You can also downgrade firmware; use the same procedure.

To upgrade the firmware:

1. If required, download the boot file and/or firmware from http://www.gegridsolutions.com/app/ViewFiles.aspx?prod=urfamily&type=7
   The boot file is a .bin file.
2. Navigate to **Settings > Product Setup > Security** and ensure that the **Remote Setting Authorized** and **Local Setting Authorized** settings are "ON." On the front panel of the device, the path is **Settings ⇨ Product Setup ⇨ Security ⇨⇩ Dual Permission Security Access**.

   If using CyberSentry security, also ensure that the relay and firmware are not locked under the **Settings > Product Setup > Security > Supervisory** settings. A Supervisor role is required for these settings.
3. In EnerVista, back up the device settings by right-clicking the device and selecting **Add Device to Offline Window**. In the window that displays, select an existing file to overwrite, or enter a name for a new settings file and optionally a location for the new file. Click the **Receive** button to start the backup.

   If an "Incompatible device order codes or versions" message displays, it means that you are trying to overwrite a file for another product. You access the **Convert Device Settings** option by right-clicking the file in the **Offline Window** area at the lower left. GE recommends converting settings in firmware steps, for example when converting from 6.0 to 7.4x, convert first to 7.0 then 7.4 in order to follow embedded conversion rules and keep settings. Note that the values of all settings that have been defaulted during conversion are not listed in the conversion report; to find the value of a setting before conversion, inspect the device backups made before conversion.
4. In EnerVista, navigate to **Maintenance > Update Firmware**.

   First select the boot file if applicable, locating the .bin file, and proceed. Restart the device, the EnerVista software, and refresh the order code in EnerVista under the **Device Setup** button.

   To update the firmware, click **Maintenance > Update Firmware**, select the firmware update by locating the file, and proceed with the update.

   If a warning message displays about the firmware not being supported by the EnerVista software, it means that the firmware is a later version than the software. Upgrade the software to the same or later version as the firmware, then try again.

   When asked if upgrading over the Internet, the difference is the flash memory buffer size each time the software sends data to the relay. Yes means that the flash memory buffer size is 256 bytes. No means that it is 1024 bytes, which is faster.

   If an "Unable to put relay in flash mode" message displays, set the **Settings > Product Setup > Security > Dual Permission Security Access > Remote Setting Authorized** and **Local Setting Authorized** settings to "ON" and try again.

   When the update is finished, the relay restarts automatically.
5. Restart the EnerVista software, and refresh the order code in EnerVista under the **Device Setup** button.
6. Verify the boot and firmware version while the device is starting up or in EnerVista under **Actual Values > Product Info > Firmware Revisions**. The boot revision is not the same as the firmware revision, and the firmware revision reflects the UR release, for example firmware revision 7.40 is UR release 7.40.
7. Set the device to "programmed" under **Settings > Product Setup > Installation**. A self-test error displays on the device until this is done.
8. If you changed the **Remote Setting Authorized**, the **Local Setting Authorized** settings, or relay lock settings, return them to their previous settings.
9. To apply any previously saved settings, right-click the saved settings file in the **Offline Window** area and select **Write to Device**.

NOTE

The field-programmable gate array (FPGA) can be upgraded under **Maintenance > Update FPGA** when the device is connected via serial cable and the firmware revision is 7.0 or higher.

Modbus addresses assigned to firmware modules, features, settings, and corresponding data items (that is, default values, minimum/maximum values, data type, and item size) can change slightly from version to version of firmware. The addresses are rearranged when new features are added or existing features are enhanced or modified. The EEPROM DATA ERROR message displayed after upgrading/downgrading the firmware is a resettable, self-test message intended to inform users that the Modbus addresses have changed with the upgraded firmware. This message does not signal any problems when appearing after firmware upgrades.

10.10 Replace module

This section outlines how to replace a module.

WARNING **Withdraw or insert a module only when control power has been removed from the unit, and be sure to insert only the correct module type into a slot, else personal injury, damage to the unit or connected equipment, or undesired operation can result.**

NOTICE To avoid damage to the equipment, use proper electrostatic discharge protection (for example, a static strap) when coming in contact with modules while the relay is energized.

The relay, being modular in design, allows for the withdrawal and insertion of modules. Replace modules only with like modules in their original factory configured slots.

To replace a module:

1. Open the enhanced faceplate to the left once the thumb screw has been removed. This allows for easy access of the modules for withdrawal. The new wide-angle hinge assembly in the enhanced front panel opens completely and allows easy access to all modules in the B30.

Figure 10-12: Modules inside relay with front cover open (enhanced faceplate)

842812A1.CDR

The basic faceplate can be opened to the left once the black plastic sliding latch on the right side has been pushed up, as shown below.

Figure 10-13: Removing module (basic faceplate)

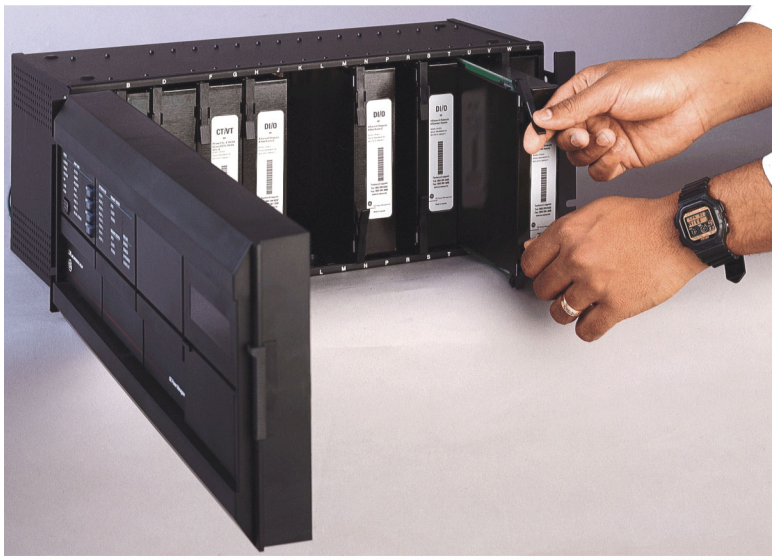

842760A1.CDR

2. With power to the unit off, disconnect individually the connections at the front and back of the module before removing the module from the chassis.

   For any Process Card/process bus module in slot H for use with a HardFiber Brick, also remove the two screws at the back that attach the module to the chassis.

3. To properly remove a module, pull simultaneously the ejector/inserter clips, located at the top and bottom of the module. Record the original location of the module to ensure that the same or replacement module is inserted into the correct slot. While modules with current input provide automatic shorting of external CT circuits, for CT/VT modules it is recommended to short/isolate external circuits accordingly for maximum safety.
4. To properly insert a module, ensure that the correct module type is inserted into the correct slot position. The ejector/inserter clips located at the top and at the bottom of each module must be in the disengaged position as the module is smoothly inserted into the slot. Once the clips have cleared the raised edge of the chassis, engage the clips simultaneously. When the clips have locked into position, the module is fully inserted.

NOTE

When adding a module (versus replacing a module), check that settings have not changed. Depending on the module, settings can reset to default values.

NOTE

The new CT/VT modules can only be used with new CPUs; similarly, old CT/VT modules can only be used with old CPUs. In the event that there is a mismatch between the CPU and CT/VT module, the relay does not function and a DSP ERROR or HARDWARE MISMATCH error displays.

10.11 Battery

A battery powers the real time clock on startup of the device.

When required, the battery can be replaced. The battery type is 3 V cylindrical.

The power supply module contains the battery. The power supply modules were upgraded in 2014 to SH/SL from RH/RL, but the order code when purchasing a UR with redundant power supply remained as RH/RL so that customers can continue to use the same order codes. The order code can read RH or RL, while the module inside the unit reads SH or SL. The order code for replacement redundant power supply modules was changed to SH/SL.

10.11.1 Replace battery

When required, the battery can be replaced. The power supply module contains the battery.

⚠CAUTION **To avoid injury, ensure that the unit has been powered off for a minimum of three minutes before replacing the battery.**

Risk of fire if battery is replaced with incorrect type or polarity.

To replace the battery:

1. Turn off the power to the unit.
2. Wait a minimum of three minutes to ensure that there is no power to the battery.
3. As outlined in the previous section, open the unit by sliding up the plastic latch on the right side of the front panel (basic front panel) or unscrewing the panel (enhanced front panel).
4. For the basic front panel, it needs to be removed in order to access the power supply module, which is typically in the first slot on the left side and blocked by the hinge of the front panel. To remove the front panel, unscrew the bracket on the left side of the unit.
5. Remove the power supply module by simultaneously pulling the ejector clips at the top and bottom of the module and sliding it out.
6. Unscrew all four screws (not three) that attach the metal cover to the module. The fourth screw is at the back end of the module, on the opposite side from the clips, beside the white electronics part (see figure).
7. Slide the metal cover away from the clips about 0.5 cm (1/8 inch) and remove the cover.
8. Unclip the black plastic holder that keeps the battery in place. The plastic clips into the socket at the bottom on both sides—pull the plastic away from the battery. Use a flat-head screwdriver if you cannot unclip the plastic with your fingers.
9. Replace the battery with the identical make and model. For example, do not use a rechargeable battery. Observe the + and - polarity of the battery and replace it with the same polarity as marked on the battery holder.

Figure 10-14: Battery location on power supply module

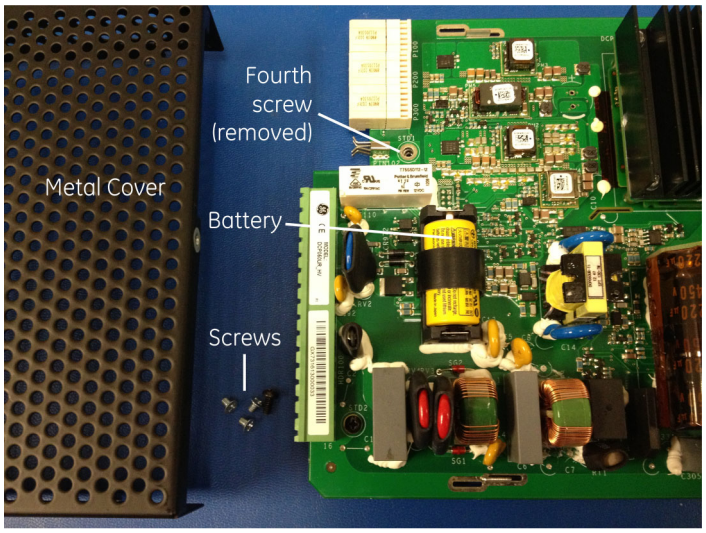

859717A1.cdr

10. Reinstall the battery holder and the metal cover, and reinsert the power supply module into the unit.
11. Power on the unit.
12. Dispose of the old battery as outlined in the next section.

10.11.2 Dispose of battery

10.11.2.1 EN Battery disposal

This product contains a battery that cannot be disposed of as unsorted municipal waste in the European Union. See the product documentation for specific battery information. The battery is marked with this symbol, which may include lettering to indicate cadmium (Cd), lead (Pb), or mercury (Hg). For proper recycling return the battery to your supplier or to a designated collection point. For more information see: www.recyclethis.info.

10.11.2.2 CS Nakládání s bateriemi

Tento produkt obsahuje baterie, které nemohou být zneškodněny v Evropské unii jako netříděný komunální odpadu. Viz dokumentace k produktu pro informace pro konkrétní baterie. Baterie je označena tímto symbolem, který může zahrnovat i uvedena písmena, kadmium (Cd), olovo (Pb), nebo rtuť (Hg). Pro správnou recyklaci baterií vraťte svémudodavateli nebo na určeném sběrném místě. Pro více informací viz: www.recyclethis.info.

10.11.2.3 DA Batteri affald

Dette produkt indeholder et batteri som ikke kan bortskaffes sammen med almindeligt husholdningsaffald i Europa. Se produktinformation for specifikke informationer om batteriet. Batteriet er forsynet med indgraveret symboler for hvad batteriet indeholder: kadmium (Cd), bly (Pb) og kviksølv (Hg). Europæiske brugere af elektrisk udstyr skal aflevere kasserede produkter til genbrug eller til leverandøren. Yderligere oplysninger findes på webstedet www.recyclethis.info.

10.11.2.4 DE Entsorgung von Batterien

Dieses Produkt beinhaltet eine Batterie, die nicht als unsortierter städtischer Abfall in der europäischen Union entsorgt werden darf. Beachten Sie die spezifischen Batterie-informationen in der Produktdokumentation. Die Batterie ist mit diesem Symbol gekennzeichnet, welches auch Hinweise auf möglicherweise enthaltene Stoffe wie Kadmium (Cd), Blei (Pb) oder Quecksilber (Hektogramm) darstellt. Für die korrekte Wiederverwertung bringen Sie diese Batterie zu Ihrem lokalen Lieferanten zurück oder entsorgen Sie das Produkt an den gekennzeichneten Sammelstellen. Weitere Informationen hierzu finden Sie auf der folgenden Website: www.recyclethis.info.

10.11.2.5 EL Απόρριψη μπαταριών

Αυτό το προϊόν περιέχει μια μπαταρία που δεν πρέπει να απορρίπτεται σε δημόσια συστήματα απόρριψης στην Ευρωπαϊκή Κοινότητα. Δείτε την τεκμηρίωση του προϊόντος για συγκεκριμένες πληροφορίες που αφορούν τη μπαταρία. Η μπαταρία είναι φέρει σήμανση με αυτό το σύμβολο, το οποίο μπορεί να περιλαμβάνει γράμματα για να δηλώσουν το κάδμιο (Cd), τον μόλυβδο (Pb), ή τον υδράργυρο (Hg). Για την κατάλληλη ανακύκλωση επιστρέψτε την μπαταρία στον προμηθευτή σας ή σε καθορισμένο σημείο συλλογής. Για περισσότερες πληροφορίες δείτε: www.recyclethis.info.

10.11.2.6 ES Eliminacion de baterias

Este producto contiene una batería que no se pueda eliminar como basura normal sin clasificar en la Unión Europea. Examine la documentación del producto para la información específica de la batería. La batería se marca con este símbolo, que puede incluir siglas para indicar el cadmio (Cd), el plomo (Pb), o el mercurio (Hg). Para el reciclaje apropiado, devuelva este producto a su distribuidor ó deshágase de él en los puntos de reciclaje designados. Para mas información : wwwrecyclethis.info.

10.11.2.7 ET Patareide kõrvaldamine

Käesolev toode sisaldab patareisid, mida Euroopa Liidus ei tohi kõrvaldada sorteerimata olmejäätmetena. Andmeid patareide kohta vaadake toote dokumentatsioonist. Patareid on märgistatud käesoleva sümboliga, millel võib olla kaadmiumi (Cd), pliid (Pb) või elavhõbedat (Hg) tähistavad tähed. Nõuetekohaseks ringlusse võtmiseks tagastage patarei tarnijale või kindlaksmääratud vastuvõtupunkti. Lisainformatsiooni saab Internetist aadressil: www.recyclethis.info.

10.11.2.8 FI Paristoje ja akkujen hävittäminen

Tuote sisältää pariston, jota ei saa hävittää Euroopan Unionin alueella talousjätteen mukana. Tarkista tuoteselosteesta tuotteen tiedot. Paristo on merkitty tällä symbolilla ja saattaa sisältää cadmiumia (Cd), lyijyä (Pb) tai elohopeaa (Hg). Oikean kierrätystavan varmistamiseksi palauta tuote paikalliselle jälleenmyyjälle tai palauta se paristojen keräyspisteeseen. Lisätietoja sivuilla www.recyclethis.info.

10.11.2.9 FR Élimination des piles

Ce produit contient une batterie qui ne peuvent être éliminés comme déchets municipaux non triés dans l'Union européenne. Voir la documentation du produit au niveau des renseignements sur la pile. La batterie est marqué de ce symbole, qui comprennent les indications cadmium (Cd), plomb (Pb), ou mercure (Hg). Pour le recyclage, retourner la batterie à votre fournisseur ou à un point de collecte. Pour plus d'informations, voir: www.recyclethis.info.

10.11.2.10 HU Akkumulátor hulladék kezelése

Ezen termék akkumulátort tartalmaz, amely az Európai Unión belül csak a kijelölt módon és helyen dobható ki. A terméken illetve a mellékelt ismertetőn olvasható a kadmium (Cd), ólom (Pb) vagy higany (Hg) tartalomra utaló betűjelzés. A hulladék akkumulátor leadható a termék forgalmazójánál új akkumulátor vásárlásakor, vagy a kijelölt elektronikai hulladékudvarokban. További információ a www.recyclethis.info oldalon.

10.11.2.11 IT Smaltimento batterie

Questo prodotto contiene una batteria che non può essere smaltita nei comuni contenitori per lo smaltimento rifiuti, nell' Unione Europea. Controllate la documentazione del prodotto per le informazioni specifiche sulla batteria. La batteria è contrassegnata con questo simbolo e può includere alcuni caratteri ad indicare la presenza di cadmio (Cd), piombo (Pb) oppure mercurio (Hg). Per il corretto smaltimento, potete restituirli al vostro fornitore locale, oppure rivolgervi e consegnarli presso i centri di raccolta preposti. Per maggiori informazioni vedere: ww.recyclethis.info.

10.11.2.12 LT Baterijų šalinimas

Šios įrangos sudėtyje yra baterijų, kurias draudžiama šalinti Europos Sąjungos viešose nerūšiuotų atliekų šalinimo sistemose. Informaciją apie baterijas galite rasti įrangos techninėje dokumentacijoje. Baterijos žymimos šiuo simboliu, papildomai gali būti nurodoma kad baterijų sudėtyje yra kadmio (Cd), švino (Pb) ar gyvsidabrio (Hg). Eksploatavimui nebetinkamas baterijas pristatykite į tam skirtas surinkimo vietas arba grąžinkite jas tiesioginiam tiekėjui, kad jos būtų tinkamai utilizuotos. Daugiau informacijos rasite šioje interneto svetainėje: www.recyclethis.info.

10.11.2.13 LV Bateriju likvidēšana

Šis produkts satur bateriju vai akumulatoru, kuru nedrīkst izmest Eiropas Savienībā esošajās sadzīves atkritumu sistēmās. Sk. produkta dokumentācijā, kur ir norādīta konkrēta informācija par bateriju vai akumulatoru. Baterijas vai akumulatora marķējumā ir šis simbols, kas var ietvert burtus, kuri norāda kadmiju (Cd), svinu (Pb) vai dzīvsudrabu (Hg). Pēc ekspluatācijas laika beigām baterijas vai akumulatori jānodod piegādātājam vai specializētā bateriju savākšanas vietā. Sīkāku informāciju var iegūt vietnē: www.recyclethis.info.

10.11.2.14 NL Verwijderen van baterijen

Dit product bevat een batterij welke niet kan verwijdert worden via de gemeentelijke huisvuilscheiding in de Europese Gemeenschap. Gelieve de product documentatie te controleren voor specifieke batterij informatie. De batterijen met deze label kunnen volgende indictaies bevatten cadium (Cd), lood (Pb) of kwik (Hg). Voor correcte vorm van kringloop, geef je de producten terug aan jou locale leverancier of geef het af aan een gespecialiseerde verzamelpunt. Meer informatie vindt u op de volgende website: www.recyclethis.info.

10.11.2.15 NO Retur av batteri

Dette produkt inneholder et batteri som ikke kan kastes med usortert kommunalt søppel i den Europeiske Unionen. Se produktdokumentasjonen for spesifikk batteriinformasjon. Batteriet er merket med dette symbolet som kan inkludere symboler for å indikere at kadmium (Cd), bly (Pb), eller kvikksølv (Hg) forekommer. Returner batteriet til leverandøren din eller til et dedikert oppsamlingspunkt for korrekt gjenvinning. For mer informasjon se: www.recyclethis.info.

10.11.2.16 PL Pozbywanie się zużytych baterii

Ten produkt zawiera baterie, które w Unii Europejskiej mogą być usuwane tylko jako posegregowane odpady komunalne. Dokładne informacje dotyczące użytych baterii znajdują się w dokumentacji produktu. Baterie oznaczone tym symbolem mogą zawierać dodatkowe oznaczenia literowe wskazujące na zawartość kadmu (Cd), ołowiu (Pb) lub rtęci (Hg). Dla zapewnienia właściwej utylizacji, należy zwrócić baterie do dostawcy albo do wyznaczonego punktu zbiórki. Więcej informacji można znaleźć na stronie internetowej www.recyclethis.info.

10.11.2.17 PT Eliminação de Baterias

Este produto contêm uma bateria que não pode ser considerado lixo municipal na União Europeia. Consulte a documentação do produto para obter informação específica da bateria. A bateria é identificada por meio de este símbolo, que pode incluir a rotulação para indicar o cádmio (Cd), chumbo (Pb), ou o mercúrio (hg). Para uma reciclagem apropriada envie a bateria para o seu fornecedor ou para um ponto de recolha designado. Para mais informação veja: www.recyclethis.info.

10.11.2.18 RU Утилизация батарей

Согласно европейской директиве об отходах электрического и электронного оборудования, продукты, содержащие батареи, нельзя утилизировать как обычные отходы на территории ЕС. Более подробную информацию вы найдете в документации к продукту. На этом символе могут присутствовать буквы, которые означают, что батарея собержит кадмий (Cd), свинец (Pb) или ртуть (Hg). Для надлежащей утилизации по окончании срока эксплуатации пользователь должен возвратить батареи локальному поставщику или сдать в специальный пункт приема. Подробности можно найти на веб-сайте: www.recyclethis.info.

10.11.2.19 SK Zaobchádzanie s batériami

Tento produkt obsahuje batériu, s ktorou sa v Európskej únii nesmie nakladať ako s netriedeným komunálnym odpadom. Dokumentácia k produktu obsahuje špecifické informácie o batérii. Batéria je označená týmto symbolom, ktorý môže obsahovať písmená na označenie kadmia (Cd), olova (Pb), alebo ortuti (Hg). Na správnu recykláciu vráťte batériu vášmu lokálnemu dodávateľovi alebo na určené zberné miesto. Pre viac informácii pozrite: www.recyclethis.info.

10.11.2.20 SL Odlaganje baterij

Ta izdelek vsebuje baterijo, ki je v Evropski uniji ni dovoljeno odstranjevati kot nesortiran komunalni odpadek. Za posebne informacije o bateriji glejte dokumentacijo izdelka. Baterija je označena s tem simbolom, ki lahko vključuje napise, ki označujejo kadmij (Cd), svinec (Pb) ali živo srebro (Hg). Za ustrezno recikliranje baterijo vrnite dobavitelju ali jo odstranite na določenem zbirališču. Za več informacij obiščite spletno stran: www.recyclethis.info.

10.11.2.21 SV Kassering av batteri

Denna produkt innehåller ett batteri som inte får kastas i allmänna sophanteringssytem inom den europeiska unionen. Se produktdokumentationen för specifik batteriinformation. Batteriet är märkt med denna symbol, vilket kan innebära att det innehåller kadmium (Cd), bly (Pb) eller kvicksilver (Hg). För korrekt återvinning skall batteriet returneras till leverantören eller till en därför avsedd deponering. För mer information, se: www.recyclethis.info.

10.11.2.22 TR Pil Geri Dönüşümü

Bu ürün Avrupa Birliği genel atık sistemlerine atılmaması gereken pil içermektedir. Daha detaylı pil bilgisi için ürünün kataloğunu inceleyiniz. Bu sembolle işaretlenmiş piller Kadmiyum(Cd), Kurşun(Pb) ya da Civa(Hg) içerebilir. Doğru geri dönüşüm için ürünü yerel tedarikçinize geri veriniz ya da özel işaretlenmiş toplama noktlarına atınız. Daha fazla bilgi için: www.recyclethis.info.

10.11.2.23 Global contacts

North America	905-294-6222
Latin America	+55 11 3614 1700
Europe, Middle East, Africa	+(34) 94 485 88 00
Asia	+86-21-2401-3208
India	+91 80 41314617

From GE Part Number 1604-0021-A1, GE Publication Number GEK-113574.

10.12 Uninstall and clear files and data

The unit can be decommissioned by turning off power to the unit and disconnecting the wires to it.

To clear files and settings in the UR:

1. On the UR front panel, navigate to **COMMANDS ⇨⇩ RELAY MAINTENANCE ⇨⇩ SERVICE COMMAND**, enter the value 20511, and press the **ENTER** key. The relay restarts and clears the UR.
2. Clear the flash memory using the **SETTINGS ⇨ PRODUCT SETUP ⇨⇩ CLEAR RELAY RECORDS** command.

To clear files and settings on the computer:

1. Uninstall the EnerVista UR Setup software.
2. Find and delete the following UR files:
   - .URS, .CID, and .ICD settings
   - .EVT event records
   - .CFG and .DAT COMTRADE

10.13 Repairs

The battery and modules inside the case can be replaced without return of the device to the factory. The firmware and software can be upgraded without return of the device to the factory.

Fuses in the power supply module are not field-replaceable.

Files can be requested for use by technical support staff, for example the Service Report (click the icon in the software) or under **Maintenance > Retrieve File**, as outlined elsewhere in this document.

For issues not solved by troubleshooting, the process to return the device to the factory for repair is as follows:

- Contact a GE Grid Solutions Technical Support Center. Contact information is found in the first chapter.
- Obtain a Return Materials Authorization (RMA) number from the Technical Support Center.
- Verify that the RMA and Commercial Invoice received have the correct information.
- Tightly pack the unit in a box with bubble wrap, foam material, or styrofoam inserts or packaging peanuts to cushion the item(s). You may also use double boxing whereby you place the box in a larger box that contains at least 5 cm of cushioning material.
- Ship the unit by courier or freight forwarder, along with the Commercial Invoice and RMA, to the factory.

  GE GRID SOLUTIONS
  650 MARKLAND STREET
  MARKHAM, ONTARIO
  CANADA L6C 0M1
  ATTN: SERVICE DEPT.

RMA# : _____

Customers are responsible for shipping costs to the factory, regardless of whether the unit is under warranty.

- Fax a copy of the shipping information to the GE Grid Solutions service department in Canada at +1 905 927 5098.

Use the detailed return procedure outlined at

https://www.gegridsolutions.com/multilin/support/ret_proc.htm

The current warranty and return information are outlined at

https://www.gegridsolutions.com/multilin/warranty.htm

10.14 Storage

Store the unit indoors in a cool, dry place. If possible, store in the original packaging. Follow the storage temperature range outlined in the Specifications.

NOTICE To avoid deterioration of electrolytic capacitors, power up units that are stored in a de-energized state once per year, for one hour continuously.

10.15 Disposal

Other than the battery, there are no special requirements for disposal of the unit at the end its service life. For customers located in the European Union, dispose of the battery as outlined earlier. To prevent non-intended use of the unit, remove the modules, dismantle the unit, and recycle the metal when possible.

B30 Bus Differential System

Appendix A: FlexAnalog operands

This appendix outlines FlexAnalog parameters.

A.1 FlexAnalog items

A FlexAnalog parameter is an analog parameter.

FlexAnalog items are also viewable in a web browser. Enter the IP address of the UR, access the **Device Information Menu** option, then the **FlexAnalog Parameter Listing** option. Entries displayed online depend on order code.

Table A-1: FlexAnalog data items

Decimal address	FlexAnalog name	Units	Description
5824	Field RTD 1 Value	---	Field RTD 1 value
5825	Field RTD 2 Value	---	Field RTD 2 value
5826	Field RTD 3 Value	---	Field RTD 3 value
5827	Field RTD 4 Value	---	Field RTD 4 value
5828	Field RTD 5 Value	---	Field RTD 5 value
5829	Field RTD 6 Value	---	Field RTD 6 value
5830	Field RTD 7 Value	---	Field RTD 7 value
5831	Field RTD 8 Value	---	Field RTD 8 value
5832	Field TDR 1 Value	---	Field TDR 1 value
5834	Field TDR 2 Value	---	Field TDR 2 value
5836	Field TDR 3 Value	---	Field TDR 3 value
5838	Field TDR 4 Value	---	Field TDR 4 value
5840	Field TDR 5 Value	---	Field TDR 5 value
5842	Field TDR 6 Value	---	Field TDR 6 value
5844	Field TDR 7 Value	---	Field TDR 7 value
5846	Field TDR 8 Value	---	Field TDR 8 value
6144	SRC 1 Ia RMS	Amps	Source 1 phase A current RMS
6146	SRC 1 Ib RMS	Amps	Source 1 phase B current RMS
6148	SRC 1 Ic RMS	Amps	Source 1 phase C current RMS
6150	SRC 1 In RMS	Amps	Source 1 neutral current RMS

A

Decimal address	FlexAnalog name	Units	Description
6152	SRC 1 Ia Mag	Amps	Source 1 phase A current magnitude
6154	SRC 1 Ia Angle	Degrees	Source 1 phase A current angle
6155	SRC 1 Ib Mag	Amps	Source 1 phase B current magnitude
6157	SRC 1 Ib Angle	Degrees	Source 1 phase B current angle
6158	SRC 1 Ic Mag	Amps	Source 1 phase C current magnitude
6160	SRC 1 Ic Angle	Degrees	Source 1 phase C current angle
6161	SRC 1 In Mag	Amps	Source 1 neutral current magnitude
6163	SRC 1 In Angle	Degrees	Source 1 neutral current angle
6164	SRC 1 Ig RMS	Amps	Source 1 ground current RMS
6166	SRC 1 Ig Mag	Amps	Source 1 ground current magnitude
6168	SRC 1 Ig Angle	Degrees	Source 1 ground current angle
6169	SRC 1 I_0 Mag	Amps	Source 1 zero-sequence current magnitude
6171	SRC 1 I_0 Angle	Degrees	Source 1 zero-sequence current angle
6172	SRC 1 I_1 Mag	Amps	Source 1 positive-sequence current magnitude
6174	SRC 1 I_1 Angle	Degrees	Source 1 positive-sequence current angle
6175	SRC 1 I_2 Mag	Amps	Source 1 negative-sequence current magnitude
6177	SRC 1 I_2 Angle	Degrees	Source 1 negative-sequence current angle
6178	SRC 1 Igd Mag	Amps	Source 1 differential ground current magnitude
6180	SRC 1 Igd Angle	Degrees	Source 1 differential ground current angle
6208	SRC 2 Ia RMS	Amps	Source 2 phase A current RMS
6210	SRC 2 Ib RMS	Amps	Source 2 phase B current RMS
6212	SRC 2 Ic RMS	Amps	Source 2 phase C current RMS
6214	SRC 2 In RMS	Amps	Source 2 neutral current RMS
6216	SRC 2 Ia Mag	Amps	Source 2 phase A current magnitude
6218	SRC 2 Ia Angle	Degrees	Source 2 phase A current angle
6219	SRC 2 Ib Mag	Amps	Source 2 phase B current magnitude
6221	SRC 2 Ib Angle	Degrees	Source 2 phase B current angle
6222	SRC 2 Ic Mag	Amps	Source 2 phase C current magnitude
6224	SRC 2 Ic Angle	Degrees	Source 2 phase C current angle
6225	SRC 2 In Mag	Amps	Source 2 neutral current magnitude
6227	SRC 2 In Angle	Degrees	Source 2 neutral current angle
6228	SRC 2 Ig RMS	Amps	Source 2 ground current RMS
6230	SRC 2 Ig Mag	Amps	Source 2 ground current magnitude
6232	SRC 2 Ig Angle	Degrees	Source 2 ground current angle
6233	SRC 2 I_0 Mag	Amps	Source 2 zero-sequence current magnitude
6235	SRC 2 I_0 Angle	Degrees	Source 2 zero-sequence current angle
6236	SRC 2 I_1 Mag	Amps	Source 2 positive-sequence current magnitude
6238	SRC 2 I_1 Angle	Degrees	Source 2 positive-sequence current angle
6239	SRC 2 I_2 Mag	Amps	Source 2 negative-sequence current magnitude
6241	SRC 2 I_2 Angle	Degrees	Source 2 negative-sequence current angle
6242	SRC 2 Igd Mag	Amps	Source 2 differential ground current magnitude
6244	SRC 2 Igd Angle	Degrees	Source 2 differential ground current angle
6272	SRC 3 Ia RMS	Amps	Source 3 phase A current RMS
6274	SRC 3 Ib RMS	Amps	Source 3 phase B current RMS
6276	SRC 3 Ic RMS	Amps	Source 3 phase C current RMS
6278	SRC 3 In RMS	Amps	Source 3 neutral current RMS

Decimal address	FlexAnalog name	Units	Description
6280	SRC 3 Ia Mag	Amps	Source 3 phase A current magnitude
6282	SRC 3 Ia Angle	Degrees	Source 3 phase A current angle
6283	SRC 3 Ib Mag	Amps	Source 3 phase B current magnitude
6285	SRC 3 Ib Angle	Degrees	Source 3 phase B current angle
6286	SRC 3 Ic Mag	Amps	Source 3 phase C current magnitude
6288	SRC 3 Ic Angle	Degrees	Source 3 phase C current angle
6289	SRC 3 In Mag	Amps	Source 3 neutral current magnitude
6291	SRC 3 In Angle	Degrees	Source 3 neutral current angle
6292	SRC 3 Ig RMS	Amps	Source 3 ground current RMS
6294	SRC 3 Ig Mag	Amps	Source 3 ground current magnitude
6296	SRC 3 Ig Angle	Degrees	Source 3 ground current angle
6297	SRC 3 I_0 Mag	Amps	Source 3 zero-sequence current magnitude
6299	SRC 3 I_0 Angle	Degrees	Source 3 zero-sequence current angle
6300	SRC 3 I_1 Mag	Amps	Source 3 positive-sequence current magnitude
6302	SRC 3 I_1 Angle	Degrees	Source 3 positive-sequence current angle
6303	SRC 3 I_2 Mag	Amps	Source 3 negative-sequence current magnitude
6305	SRC 3 I_2 Angle	Degrees	Source 3 negative-sequence current angle
6306	SRC 3 Igd Mag	Amps	Source 3 differential ground current magnitude
6308	SRC 3 Igd Angle	Degrees	Source 3 differential ground current angle
6336	SRC 4 Ia RMS	Amps	Source 4 phase A current RMS
6338	SRC 4 Ib RMS	Amps	Source 4 phase B current RMS
6340	SRC 4 Ic RMS	Amps	Source 4 phase C current RMS
6342	SRC 4 In RMS	Amps	Source 4 neutral current RMS
6344	SRC 4 Ia Mag	Amps	Source 4 phase A current magnitude
6346	SRC 4 Ia Angle	Degrees	Source 4 phase A current angle
6347	SRC 4 Ib Mag	Amps	Source 4 phase B current magnitude
6349	SRC 4 Ib Angle	Degrees	Source 4 phase B current angle
6350	SRC 4 Ic Mag	Amps	Source 4 phase C current magnitude
6352	SRC 4 Ic Angle	Degrees	Source 4 phase C current angle
6353	SRC 4 In Mag	Amps	Source 4 neutral current magnitude
6355	SRC 4 In Angle	Degrees	Source 4 neutral current angle
6356	SRC 4 Ig RMS	Amps	Source 4 ground current RMS
6358	SRC 4 Ig Mag	Amps	Source 4 ground current magnitude
6360	SRC 4 Ig Angle	Degrees	Source 4 ground current angle
6361	SRC 4 I_0 Mag	Amps	Source 4 zero-sequence current magnitude
6363	SRC 4 I_0 Angle	Degrees	Source 4 zero-sequence current angle
6364	SRC 4 I_1 Mag	Amps	Source 4 positive-sequence current magnitude
6366	SRC 4 I_1 Angle	Degrees	Source 4 positive-sequence current angle
6367	SRC 4 I_2 Mag	Amps	Source 4 negative-sequence current magnitude
6369	SRC 4 I_2 Angle	Degrees	Source 4 negative-sequence current angle
6370	SRC 4 Igd Mag	Amps	Source 4 differential ground current magnitude
6372	SRC 4 Igd Angle	Degrees	Source 4 differential ground current angle
6400	SRC 5 Ia RMS	Amps	Source 5 phase A current RMS
6402	SRC 5 Ib RMS	Amps	Source 5 phase B current RMS
6404	SRC 5 Ic RMS	Amps	Source 5 phase C current RMS
6406	SRC 5 In RMS	Amps	Source 5 neutral current RMS

A

Decimal address	FlexAnalog name	Units	Description
6408	SRC 5 Ia Mag	Amps	Source 5 phase A current magnitude
6410	SRC 5 Ia Angle	Degrees	Source 5 phase A current angle
6411	SRC 5 Ib Mag	Amps	Source 5 phase B current magnitude
6413	SRC 5 Ib Angle	Degrees	Source 5 phase B current angle
6414	SRC 5 Ic Mag	Amps	Source 5 phase C current magnitude
6416	SRC 5 Ic Angle	Degrees	Source 5 phase C current angle
6417	SRC 5 In Mag	Amps	Source 5 neutral current magnitude
6419	SRC 5 In Angle	Degrees	Source 5 neutral current angle
6420	SRC 5 Ig RMS	Amps	Source 5 ground current RMS
6422	SRC 5 Ig Mag	Amps	Source 5 ground current magnitude
6424	SRC 5 Ig Angle	Degrees	Source 5 ground current angle
6425	SRC 5 I_0 Mag	Amps	Source 5 zero-sequence current magnitude
6427	SRC 5 I_0 Angle	Degrees	Source 5 zero-sequence current angle
6428	SRC 5 I_1 Mag	Amps	Source 5 positive-sequence current magnitude
6430	SRC 5 I_1 Angle	Degrees	Source 5 positive-sequence current angle
6431	SRC 5 I_2 Mag	Amps	Source 5 negative-sequence current magnitude
6433	SRC 5 I_2 Angle	Degrees	Source 5 negative-sequence current angle
6434	SRC 5 Igd Mag	Amps	Source 5 differential ground current magnitude
6436	SRC 5 Igd Angle	Degrees	Source 5 differential ground current angle
6464	SRC 6 Ia RMS	Amps	Source 6 phase A current RMS
6466	SRC 6 Ib RMS	Amps	Source 6 phase B current RMS
6468	SRC 6 Ic RMS	Amps	Source 6 phase C current RMS
6470	SRC 6 In RMS	Amps	Source 6 neutral current RMS
6472	SRC 6 Ia Mag	Amps	Source 6 phase A current magnitude
6474	SRC 6 Ia Angle	Degrees	Source 6 phase A current angle
6475	SRC 6 Ib Mag	Amps	Source 6 phase B current magnitude
6477	SRC 6 Ib Angle	Degrees	Source 6 phase B current angle
6478	SRC 6 Ic Mag	Amps	Source 6 phase C current magnitude
6480	SRC 6 Ic Angle	Degrees	Source 6 phase C current angle
6481	SRC 6 In Mag	Amps	Source 6 neutral current magnitude
6483	SRC 6 In Angle	Degrees	Source 6 neutral current angle
6484	SRC 6 Ig RMS	Amps	Source 6 ground current RMS
6486	SRC 6 Ig Mag	Amps	Source 6 ground current magnitude
6488	SRC 6 Ig Angle	Degrees	Source 6 ground current angle
6489	SRC 6 I_0 Mag	Amps	Source 6 zero-sequence current magnitude
6491	SRC 6 I_0 Angle	Degrees	Source 6 zero-sequence current angle
6492	SRC 6 I_1 Mag	Amps	Source 6 positive-sequence current magnitude
6494	SRC 6 I_1 Angle	Degrees	Source 6 positive-sequence current angle
6495	SRC 6 I_2 Mag	Amps	Source 6 negative-sequence current magnitude
6497	SRC 6 I_2 Angle	Degrees	Source 6 negative-sequence current angle
6498	SRC 6 Igd Mag	Amps	Source 6 differential ground current magnitude
6500	SRC 6 Igd Angle	Degrees	Source 6 differential ground current angle
6656	SRC 1 Vag RMS	Volts	Source 1 phase AG voltage RMS
6658	SRC 1 Vbg RMS	Volts	Source 1 phase BG voltage RMS
6660	SRC 1 Vcg RMS	Volts	Source 1 phase CG voltage RMS
6662	SRC 1 Vag Mag	Volts	Source 1 phase AG voltage magnitude

Decimal address	FlexAnalog name	Units	Description
6664	SRC 1 Vag Angle	Degrees	Source 1 phase AG voltage angle
6665	SRC 1 Vbg Mag	Volts	Source 1 phase BG voltage magnitude
6667	SRC 1 Vbg Angle	Degrees	Source 1 phase BG voltage angle
6668	SRC 1 Vcg Mag	Volts	Source 1 phase CG voltage magnitude
6670	SRC 1 Vcg Angle	Degrees	Source 1 phase CG voltage angle
6671	SRC 1 Vab RMS	Volts	Source 1 phase AB voltage RMS
6673	SRC 1 Vbc RMS	Volts	Source 1 phase BC voltage RMS
6675	SRC 1 Vca RMS	Volts	Source 1 phase CA voltage RMS
6677	SRC 1 Vab Mag	Volts	Source 1 phase AB voltage magnitude
6679	SRC 1 Vab Angle	Degrees	Source 1 phase AB voltage angle
6680	SRC 1 Vbc Mag	Volts	Source 1 phase BC voltage magnitude
6682	SRC 1 Vbc Angle	Degrees	Source 1 phase BC voltage angle
6683	SRC 1 Vca Mag	Volts	Source 1 phase CA voltage magnitude
6685	SRC 1 Vca Angle	Degrees	Source 1 phase CA voltage angle
6686	SRC 1 Vx RMS	Volts	Source 1 auxiliary voltage RMS
6688	SRC 1 Vx Mag	Volts	Source 1 auxiliary voltage magnitude
6690	SRC 1 Vx Angle	Degrees	Source 1 auxiliary voltage angle
6691	SRC 1 V_0 Mag	Volts	Source 1 zero-sequence voltage magnitude
6693	SRC 1 V_0 Angle	Degrees	Source 1 zero-sequence voltage angle
6694	SRC 1 V_1 Mag	Volts	Source 1 positive-sequence voltage magnitude
6696	SRC 1 V_1 Angle	Degrees	Source 1 positive-sequence voltage angle
6697	SRC 1 V_2 Mag	Volts	Source 1 negative-sequence voltage magnitude
6699	SRC 1 V_2 Angle	Degrees	Source 1 negative-sequence voltage angle
6720	SRC 2 Vag RMS	Volts	Source 2 phase AG voltage RMS
6722	SRC 2 Vbg RMS	Volts	Source 2 phase BG voltage RMS
6724	SRC 2 Vcg RMS	Volts	Source 2 phase CG voltage RMS
6726	SRC 2 Vag Mag	Volts	Source 2 phase AG voltage magnitude
6728	SRC 2 Vag Angle	Degrees	Source 2 phase AG voltage angle
6729	SRC 2 Vbg Mag	Volts	Source 2 phase BG voltage magnitude
6731	SRC 2 Vbg Angle	Degrees	Source 2 phase BG voltage angle
6732	SRC 2 Vcg Mag	Volts	Source 2 phase CG voltage magnitude
6734	SRC 2 Vcg Angle	Degrees	Source 2 phase CG voltage angle
6735	SRC 2 Vab RMS	Volts	Source 2 phase AB voltage RMS
6737	SRC 2 Vbc RMS	Volts	Source 2 phase BC voltage RMS
6739	SRC 2 Vca RMS	Volts	Source 2 phase CA voltage RMS
6741	SRC 2 Vab Mag	Volts	Source 2 phase AB voltage magnitude
6743	SRC 2 Vab Angle	Degrees	Source 2 phase AB voltage angle
6744	SRC 2 Vbc Mag	Volts	Source 2 phase BC voltage magnitude
6746	SRC 2 Vbc Angle	Degrees	Source 2 phase BC voltage angle
6747	SRC 2 Vca Mag	Volts	Source 2 phase CA voltage magnitude
6749	SRC 2 Vca Angle	Degrees	Source 2 phase CA voltage angle
6750	SRC 2 Vx RMS	Volts	Source 2 auxiliary voltage RMS
6752	SRC 2 Vx Mag	Volts	Source 2 auxiliary voltage magnitude
6754	SRC 2 Vx Angle	Degrees	Source 2 auxiliary voltage angle
6755	SRC 2 V_0 Mag	Volts	Source 2 zero-sequence voltage magnitude
6757	SRC 2 V_0 Angle	Degrees	Source 2 zero-sequence voltage angle

A

Decimal address	FlexAnalog name	Units	Description
6758	SRC 2 V_1 Mag	Volts	Source 2 positive-sequence voltage magnitude
6760	SRC 2 V_1 Angle	Degrees	Source 2 positive-sequence voltage angle
6761	SRC 2 V_2 Mag	Volts	Source 2 negative-sequence voltage magnitude
6763	SRC 2 V_2 Angle	Degrees	Source 2 negative-sequence voltage angle
6784	SRC 3 Vag RMS	Volts	Source 3 phase AG voltage RMS
6786	SRC 3 Vbg RMS	Volts	Source 3 phase BG voltage RMS
6788	SRC 3 Vcg RMS	Volts	Source 3 phase CG voltage RMS
6790	SRC 3 Vag Mag	Volts	Source 3 phase AG voltage magnitude
6792	SRC 3 Vag Angle	Degrees	Source 3 phase AG voltage angle
6793	SRC 3 Vbg Mag	Volts	Source 3 phase BG voltage magnitude
6795	SRC 3 Vbg Angle	Degrees	Source 3 phase BG voltage angle
6796	SRC 3 Vcg Mag	Volts	Source 3 phase CG voltage magnitude
6798	SRC 3 Vcg Angle	Degrees	Source 3 phase CG voltage angle
6799	SRC 3 Vab RMS	Volts	Source 3 phase AB voltage RMS
6801	SRC 3 Vbc RMS	Volts	Source 3 phase BC voltage RMS
6803	SRC 3 Vca RMS	Volts	Source 3 phase CA voltage RMS
6805	SRC 3 Vab Mag	Volts	Source 3 phase AB voltage magnitude
6807	SRC 3 Vab Angle	Degrees	Source 3 phase AB voltage angle
6808	SRC 3 Vbc Mag	Volts	Source 3 phase BC voltage magnitude
6810	SRC 3 Vbc Angle	Degrees	Source 3 phase BC voltage angle
6811	SRC 3 Vca Mag	Volts	Source 3 phase CA voltage magnitude
6813	SRC 3 Vca Angle	Degrees	Source 3 phase CA voltage angle
6814	SRC 3 Vx RMS	Volts	Source 3 auxiliary voltage RMS
6816	SRC 3 Vx Mag	Volts	Source 3 auxiliary voltage magnitude
6818	SRC 3 Vx Angle	Degrees	Source 3 auxiliary voltage angle
6819	SRC 3 V_0 Mag	Volts	Source 3 zero-sequence voltage magnitude
6821	SRC 3 V_0 Angle	Degrees	Source 3 zero-sequence voltage angle
6822	SRC 3 V_1 Mag	Volts	Source 3 positive-sequence voltage magnitude
6824	SRC 3 V_1 Angle	Degrees	Source 3 positive-sequence voltage angle
6825	SRC 3 V_2 Mag	Volts	Source 3 negative-sequence voltage magnitude
6827	SRC 3 V_2 Angle	Degrees	Source 3 negative-sequence voltage angle
6848	SRC 4 Vag RMS	Volts	Source 4 phase AG voltage RMS
6850	SRC 4 Vbg RMS	Volts	Source 4 phase BG voltage RMS
6852	SRC 4 Vcg RMS	Volts	Source 4 phase CG voltage RMS
6854	SRC 4 Vag Mag	Volts	Source 4 phase AG voltage magnitude
6856	SRC 4 Vag Angle	Degrees	Source 4 phase AG voltage angle
6857	SRC 4 Vbg Mag	Volts	Source 4 phase BG voltage magnitude
6859	SRC 4 Vbg Angle	Degrees	Source 4 phase BG voltage angle
6860	SRC 4 Vcg Mag	Volts	Source 4 phase CG voltage magnitude
6862	SRC 4 Vcg Angle	Degrees	Source 4 phase CG voltage angle
6863	SRC 4 Vab RMS	Volts	Source 4 phase AB voltage RMS
6865	SRC 4 Vbc RMS	Volts	Source 4 phase BC voltage RMS
6867	SRC 4 Vca RMS	Volts	Source 4 phase CA voltage RMS
6869	SRC 4 Vab Mag	Volts	Source 4 phase AB voltage magnitude
6871	SRC 4 Vab Angle	Degrees	Source 4 phase AB voltage angle
6872	SRC 4 Vbc Mag	Volts	Source 4 phase BC voltage magnitude

A

Decimal address	FlexAnalog name	Units	Description
6874	SRC 4 Vbc Angle	Degrees	Source 4 phase BC voltage angle
6875	SRC 4 Vca Mag	Volts	Source 4 phase CA voltage magnitude
6877	SRC 4 Vca Angle	Degrees	Source 4 phase CA voltage angle
6878	SRC 4 Vx RMS	Volts	Source 4 auxiliary voltage RMS
6880	SRC 4 Vx Mag	Volts	Source 4 auxiliary voltage magnitude
6882	SRC 4 Vx Angle	Degrees	Source 4 auxiliary voltage angle
6883	SRC 4 V_0 Mag	Volts	Source 4 zero-sequence voltage magnitude
6885	SRC 4 V_0 Angle	Degrees	Source 4 zero-sequence voltage angle
6886	SRC 4 V_1 Mag	Volts	Source 4 positive-sequence voltage magnitude
6888	SRC 4 V_1 Angle	Degrees	Source 4 positive-sequence voltage angle
6889	SRC 4 V_2 Mag	Volts	Source 4 negative-sequence voltage magnitude
6891	SRC 4 V_2 Angle	Degrees	Source 4 negative-sequence voltage angle
6912	SRC 5 Vag RMS	Volts	Source 5 phase AG voltage RMS
6914	SRC 5 Vbg RMS	Volts	Source 5 phase BG voltage RMS
6916	SRC 5 Vcg RMS	Volts	Source 5 phase CG voltage RMS
6918	SRC 5 Vag Mag	Volts	Source 5 phase AG voltage magnitude
6920	SRC 5 Vag Angle	Degrees	Source 5 phase AG voltage angle
6921	SRC 5 Vbg Mag	Volts	Source 5 phase BG voltage magnitude
6923	SRC 5 Vbg Angle	Degrees	Source 5 phase BG voltage angle
6924	SRC 5 Vcg Mag	Volts	Source 5 phase CG voltage magnitude
6926	SRC 5 Vcg Angle	Degrees	Source 5 phase CG voltage angle
6927	SRC 5 Vab RMS	Volts	Source 5 phase AB voltage RMS
6929	SRC 5 Vbc RMS	Volts	Source 5 phase BC voltage RMS
6931	SRC 5 Vca RMS	Volts	Source 5 phase CA voltage RMS
6933	SRC 5 Vab Mag	Volts	Source 5 phase AB voltage magnitude
6935	SRC 5 Vab Angle	Degrees	Source 5 phase AB voltage angle
6936	SRC 5 Vbc Mag	Volts	Source 5 phase BC voltage magnitude
6938	SRC 5 Vbc Angle	Degrees	Source 5 phase BC voltage angle
6939	SRC 5 Vca Mag	Volts	Source 5 phase CA voltage magnitude
6941	SRC 5 Vca Angle	Degrees	Source 5 phase CA voltage angle
6942	SRC 5 Vx RMS	Volts	Source 5 auxiliary voltage RMS
6944	SRC 5 Vx Mag	Volts	Source 5 auxiliary voltage magnitude
6946	SRC 5 Vx Angle	Degrees	Source 5 auxiliary voltage angle
6947	SRC 5 V_0 Mag	Volts	Source 5 zero-sequence voltage magnitude
6949	SRC 5 V_0 Angle	Degrees	Source 5 zero-sequence voltage angle
6950	SRC 5 V_1 Mag	Volts	Source 5 positive-sequence voltage magnitude
6952	SRC 5 V_1 Angle	Degrees	Source 5 positive-sequence voltage angle
6953	SRC 5 V_2 Mag	Volts	Source 5 negative-sequence voltage magnitude
6955	SRC 5 V_2 Angle	Degrees	Source 5 negative-sequence voltage angle
6976	SRC 6 Vag RMS	Volts	Source 6 phase AG voltage RMS
6978	SRC 6 Vbg RMS	Volts	Source 6 phase BG voltage RMS
6980	SRC 6 Vcg RMS	Volts	Source 6 phase CG voltage RMS
6982	SRC 6 Vag Mag	Volts	Source 6 phase AG voltage magnitude
6984	SRC 6 Vag Angle	Degrees	Source 6 phase AG voltage angle
6985	SRC 6 Vbg Mag	Volts	Source 6 phase BG voltage magnitude
6987	SRC 6 Vbg Angle	Degrees	Source 6 phase BG voltage angle

A

Decimal address	FlexAnalog name	Units	Description
6988	SRC 6 Vcg Mag	Volts	Source 6 phase CG voltage magnitude
6990	SRC 6 Vcg Angle	Degrees	Source 6 phase CG voltage angle
6991	SRC 6 Vab RMS	Volts	Source 6 phase AB voltage RMS
6993	SRC 6 Vbc RMS	Volts	Source 6 phase BC voltage RMS
6995	SRC 6 Vca RMS	Volts	Source 6 phase CA voltage RMS
6997	SRC 6 Vab Mag	Volts	Source 6 phase AB voltage magnitude
6999	SRC 6 Vab Angle	Degrees	Source 6 phase AB voltage angle
7000	SRC 6 Vbc Mag	Volts	Source 6 phase BC voltage magnitude
7002	SRC 6 Vbc Angle	Degrees	Source 6 phase BC voltage angle
7003	SRC 6 Vca Mag	Volts	Source 6 phase CA voltage magnitude
7005	SRC 6 Vca Angle	Degrees	Source 6 phase CA voltage angle
7006	SRC 6 Vx RMS	Volts	Source 6 auxiliary voltage RMS
7008	SRC 6 Vx Mag	Volts	Source 6 auxiliary voltage magnitude
7010	SRC 6 Vx Angle	Degrees	Source 6 auxiliary voltage angle
7011	SRC 6 V_0 Mag	Volts	Source 6 zero-sequence voltage magnitude
7013	SRC 6 V_0 Angle	Degrees	Source 6 zero-sequence voltage angle
7014	SRC 6 V_1 Mag	Volts	Source 6 positive-sequence voltage magnitude
7016	SRC 6 V_1 Angle	Degrees	Source 6 positive-sequence voltage angle
7017	SRC 6 V_2 Mag	Volts	Source 6 negative-sequence voltage magnitude
7019	SRC 6 V_2 Angle	Degrees	Source 6 negative-sequence voltage angle
7168	SRC 1 P	Watts	Source 1 three-phase real power
7170	SRC 1 Pa	Watts	Source 1 phase A real power
7172	SRC 1 Pb	Watts	Source 1 phase B real power
7174	SRC 1 Pc	Watts	Source 1 phase C real power
7176	SRC 1 Q	Vars	Source 1 three-phase reactive power
7178	SRC 1 Qa	Vars	Source 1 phase A reactive power
7180	SRC 1 Qb	Vars	Source 1 phase B reactive power
7182	SRC 1 Qc	Vars	Source 1 phase C reactive power
7184	SRC 1 S	VA	Source 1 three-phase apparent power
7186	SRC 1 Sa	VA	Source 1 phase A apparent power
7188	SRC 1 Sb	VA	Source 1 phase B apparent power
7190	SRC 1 Sc	VA	Source 1 phase C apparent power
7192	SRC 1 PF	---	Source 1 three-phase power factor
7193	SRC 1 Phase A PF	---	Source 1 phase A power factor
7194	SRC 1 Phase B PF	---	Source 1 phase B power factor
7195	SRC 1 Phase C PF	---	Source 1 phase C power factor
7200	SRC 2 P	Watts	Source 2 three-phase real power
7202	SRC 2 Pa	Watts	Source 2 phase A real power
7204	SRC 2 Pb	Watts	Source 2 phase B real power
7206	SRC 2 Pc	Watts	Source 2 phase C real power
7208	SRC 2 Q	Vars	Source 2 three-phase reactive power
7210	SRC 2 Qa	Vars	Source 2 phase A reactive power
7212	SRC 2 Qb	Vars	Source 2 phase B reactive power
7214	SRC 2 Qc	Vars	Source 2 phase C reactive power
7216	SRC 2 S	VA	Source 2 three-phase apparent power
7218	SRC 2 Sa	VA	Source 2 phase A apparent power

Decimal address	FlexAnalog name	Units	Description
7220	SRC 2 Sb	VA	Source 2 phase B apparent power
7222	SRC 2 Sc	VA	Source 2 phase C apparent power
7224	SRC 2 PF	---	Source 2 three-phase power factor
7225	SRC 2 Phase A PF	---	Source 2 phase A power factor
7226	SRC 2 Phase B PF	---	Source 2 phase B power factor
7227	SRC 2 Phase C PF	---	Source 2 phase C power factor
7232	SRC 3 P	Watts	Source 3 three-phase real power
7234	SRC 3 Pa	Watts	Source 3 phase A real power
7236	SRC 3 Pb	Watts	Source 3 phase B real power
7238	SRC 3 Pc	Watts	Source 3 phase C real power
7240	SRC 3 Q	Vars	Source 3 three-phase reactive power
7242	SRC 3 Qa	Vars	Source 3 phase A reactive power
7244	SRC 3 Qb	Vars	Source 3 phase B reactive power
7246	SRC 3 Qc	Vars	Source 3 phase C reactive power
7248	SRC 3 S	VA	Source 3 three-phase apparent power
7250	SRC 3 Sa	VA	Source 3 phase A apparent power
7252	SRC 3 Sb	VA	Source 3 phase B apparent power
7254	SRC 3 Sc	VA	Source 3 phase C apparent power
7256	SRC 3 PF	---	Source 3 three-phase power factor
7257	SRC 3 Phase A PF	---	Source 3 phase A power factor
7258	SRC 3 Phase B PF	---	Source 3 phase B power factor
7259	SRC 3 Phase C PF	---	Source 3 phase C power factor
7264	SRC 4 P	Watts	Source 4 three-phase real power
7266	SRC 4 Pa	Watts	Source 4 phase A real power
7268	SRC 4 Pb	Watts	Source 4 phase B real power
7270	SRC 4 Pc	Watts	Source 4 phase C real power
7272	SRC 4 Q	Vars	Source 4 three-phase reactive power
7274	SRC 4 Qa	Vars	Source 4 phase A reactive power
7276	SRC 4 Qb	Vars	Source 4 phase B reactive power
7278	SRC 4 Qc	Vars	Source 4 phase C reactive power
7280	SRC 4 S	VA	Source 4 three-phase apparent power
7282	SRC 4 Sa	VA	Source 4 phase A apparent power
7284	SRC 4 Sb	VA	Source 4 phase B apparent power
7286	SRC 4 Sc	VA	Source 4 phase C apparent power
7288	SRC 4 PF	---	Source 4 three-phase power factor
7289	SRC 4 Phase A PF	---	Source 4 phase A power factor
7290	SRC 4 Phase B PF	---	Source 4 phase B power factor
7291	SRC 4 Phase C PF	---	Source 4 phase C power factor
7296	SRC 5 P	Watts	Source 5 three-phase real power
7298	SRC 5 Pa	Watts	Source 5 phase A real power
7300	SRC 5 Pb	Watts	Source 5 phase B real power
7302	SRC 5 Pc	Watts	Source 5 phase C real power
7304	SRC 5 Q	Vars	Source 5 three-phase reactive power
7306	SRC 5 Qa	Vars	Source 5 phase A reactive power
7308	SRC 5 Qb	Vars	Source 5 phase B reactive power
7310	SRC 5 Qc	Vars	Source 5 phase C reactive power

A

Decimal address	FlexAnalog name	Units	Description
7312	SRC 5 S	VA	Source 5 three-phase apparent power
7314	SRC 5 Sa	VA	Source 5 phase A apparent power
7316	SRC 5 Sb	VA	Source 5 phase B apparent power
7318	SRC 5 Sc	VA	Source 5 phase C apparent power
7320	SRC 5 PF	---	Source 5 three-phase power factor
7321	SRC 5 Phase A PF	---	Source 5 phase A power factor
7322	SRC 5 Phase B PF	---	Source 5 phase B power factor
7323	SRC 5 Phase C PF	---	Source 5 phase C power factor
7328	SRC 6 P	Watts	Source 6 three-phase real power
7330	SRC 6 Pa	Watts	Source 6 phase A real power
7332	SRC 6 Pb	Watts	Source 6 phase B real power
7334	SRC 6 Pc	Watts	Source 6 phase C real power
7336	SRC 6 Q	Vars	Source 6 three-phase reactive power
7338	SRC 6 Qa	Vars	Source 6 phase A reactive power
7340	SRC 6 Qb	Vars	Source 6 phase B reactive power
7342	SRC 6 Qc	Vars	Source 6 phase C reactive power
7344	SRC 6 S	VA	Source 6 three-phase apparent power
7346	SRC 6 Sa	VA	Source 6 phase A apparent power
7348	SRC 6 Sb	VA	Source 6 phase B apparent power
7350	SRC 6 Sc	VA	Source 6 phase C apparent power
7352	SRC 6 PF	---	Source 6 three-phase power factor
7353	SRC 6 Phase A PF	---	Source 6 phase A power factor
7354	SRC 6 Phase B PF	---	Source 6 phase B power factor
7355	SRC 6 Phase C PF	---	Source 6 phase C power factor
7424	SRC 1 Pos Watthour	kWh	Source 1 positive Watthour
7426	SRC 1 Neg Watthour	Wh	Source 1 negative Watthour
7428	SRC 1 Pos varh	varh	Source 1 positive varhour
7430	SRC 1 Neg varh	varh	Source 1 negative varhour
7440	SRC 2 Pos Watthour	kWh	Source 2 positive Watthour
7442	SRC 2 Neg Watthour	Wh	Source 2 negative Watthour
7444	SRC 2 Pos varh	varh	Source 2 positive varhour
7446	SRC 2 Neg varh	varh	Source 2 negative varhour
7456	SRC 3 Pos Watthour	kWh	Source 3 positive Watthour
7458	SRC 3 Neg Watthour	kWh	Source 3 negative Watthour
7460	SRC 3 Pos varh	varh	Source 3 positive varhour
7462	SRC 3 Neg varh	varh	Source 3 negative varhour
7472	SRC 4 Pos Watthour	Wh	Source 4 positive Watthour
7474	SRC 4 Neg Watthour	Wh	Source 4 negative Watthour
7476	SRC 4 Pos varh	varh	Source 4 positive varhour
7478	SRC 4 Neg varh	varh	Source 4 negative varhour
7488	SRC 5 Pos Watthour	Wh	Source 5 positive Watthour
7490	SRC 5 Neg Watthour	Wh	Source 5 negative Watthour
7492	SRC 5 Pos varh	varh	Source 5 positive varhour
7494	SRC 5 Neg varh	varh	Source 5 negative varhour
7504	SRC 6 Pos Watthour	Wh	Source 6 positive Watthour
7506	SRC 6 Neg Watthour	Wh	Source 6 negative Watthour

Decimal address	FlexAnalog name	Units	Description
7508	SRC 6 Pos varh	varh	Source 6 positive varhour
7510	SRC 6 Neg varh	varh	Source 6 negative varhour
7552	SRC 1 Frequency	Hz	Source 1 frequency
7554	SRC 2 Frequency	Hz	Source 2 frequency
7556	SRC 3 Frequency	Hz	Source 3 frequency
7558	SRC 4 Frequency	Hz	Source 4 frequency
7560	SRC 5 Frequency	Hz	Source 5 frequency
7562	SRC 6 Frequency	Hz	Source 6 frequency
7718	SRC 3 Demand Watt	Watts	Source 3 real power demand
7720	SRC 3 Demand var	Vars	Source 3 reactive power demand
7722	SRC 3 Demand VA	VA	Source 3 apparent power demand
7728	SRC 4 Demand Ia	Amps	Source 4 phase A current demand
7730	SRC 4 Demand Ib	Amps	Source 4 phase B current demand
7732	SRC 4 Demand Ic	Amps	Source 4 phase C current demand
7734	SRC 4 Demand Watt	Watts	Source 4 real power demand
7736	SRC 4 Demand var	Vars	Source 4 reactive power demand
7738	SRC 4 Demand VA	VA	Source 4 apparent power demand
7744	SRC 5 Demand Ia	Amps	Source 5 phase A current demand
7746	SRC 5 Demand Ib	Amps	Source 5 phase B current demand
7748	SRC 5 Demand Ic	Amps	Source 5 phase C current demand
7750	SRC 5 Demand Watt	Watts	Source 5 real power demand
7752	SRC 5 Demand var	Vars	Source 5 reactive power demand
7754	SRC 5 Demand VA	VA	Source 5 apparent power demand
7760	SRC 6 Demand Ia	Amps	Source 6 phase A current demand
7762	SRC 6 Demand Ib	Amps	Source 6 phase B current demand
7764	SRC 6 Demand Ic	Amps	Source 6 phase C current demand
7766	SRC 6 Demand Watt	Watts	Source 6 real power demand
7768	SRC 6 Demand var	Vars	Source 6 reactive power demand
7770	SRC 6 Demand VA	VA	Source 6 apparent power demand
8692	Brk 3 Arc Amp A	kA2-cyc	Breaker 3 arcing amp phase A
8694	Brk 3 Arc Amp B	kA2-cyc	Breaker 3 arcing amp phase B
8696	Brk 3 Arc Amp C	kA2-cyc	Breaker 3 arcing amp phase C
8698	Brk 3 Op Time A	ms	Breaker 3 operating time phase A
8699	Brk 3 Op Time B	ms	Breaker 3 operating time phase B
8700	Brk 3 Op Time C	ms	Breaker 3 operating time phase C
8701	Brk 3 Op Time	ms	Breaker 3 operating time
8702	Brk 4 Arc Amp A	kA2-cyc	Breaker 4 arcing amp phase A
8704	Brk 4 Arc Amp B	kA2-cyc	Breaker 4 arcing amp phase B
8706	Brk 4 Arc Amp C	kA2-cyc	Breaker 4 arcing amp phase C
8708	Brk 4 Op Time A	ms	Breaker 4 operating time phase A
8709	Brk 4 Op Time B	ms	Breaker 4 operating time phase B
8710	Brk 4 Op Time C	ms	Breaker 4 operating time phase C
8711	Brk 4 Op Time	ms	Breaker 4 operating time
9472	Bus 1 Diff A Mag	Amps	Bus differential current phase A magnitude
9474	Bus 1 Diff A Ang	Degrees	Bus differential current phase A angle
9475	Bus 1 Diff B Mag	Amps	Bus differential current phase B magnitude

A

Decimal address	FlexAnalog name	Units	Description
9477	Bus 1 Diff B Ang	Degrees	Bus differential current phase B angle
9478	Bus 1 Diff C Mag	Amps	Bus differential current phase C magnitude
9480	Bus 1 Diff C Ang	Degrees	Bus differential current phase C angle
9481	Bus 1 Rest A Mag	Amps	Bus restraint current phase A magnitude
9483	Bus 1 Rest A Ang	Degrees	Bus restraint current phase A angle
9484	Bus 1 Rest B Mag	Amps	Bus restraint current phase B magnitude
9486	Bus 1 Rest B Ang	Degrees	Bus restraint current phase B angle
9487	Bus 1 Rest C Mag	Amps	Bus restraint current phase C magnitude
9489	Bus 1 Rest C Ang	Degrees	Bus restraint current phase C angle
9493	Bus Max CT Primary	Amps	Bus maximum CT primary
9504	Bus 2 Diff A Mag	Amps	Bus differential IA magnitude
9506	Bus 2 Diff A Ang	Degrees	Bus differential IA angle
9507	Bus 2 Diff B Mag	Amps	Bus differential IB magnitude
9509	Bus 2 Diff B Ang	Degrees	Bus differential IB angle
9510	Bus 2 Diff C Mag	Amps	Bus differential IC magnitude
9512	Bus 2 Diff C Ang	Degrees	Bus differential IC angle
9513	Bus 2 Rest A Mag	Amps	Bus restraint IA magnitude
9515	Bus 2 Rest A Ang	Degrees	Bus restraint IA angle
9516	Bus 2 Rest B Mag	Amps	Bus restraint IB magnitude
9518	Bus 2 Rest B Ang	Degrees	Bus restraint IB angle
9519	Bus 2 Rest C Mag	Amps	Bus restraint IC magnitude
9521	Bus 2 Rest C Ang	Degrees	Bus restraint IC angle
9525	Bus 2 Max CT Primary	Amps	Bus maximum CT primary
12032	Brk 1 Acc Arc Amp A	kA2-cyc	Breaker 1 Acc arcing amp phase A
12034	Brk 1 Acc Arc Amp B	kA2-cyc	Breaker 1 Acc arcing amp phase B
12036	Brk 1 Acc Arc Amp C	kA2-cyc	Breaker 1 Acc arcing amp phase C
12038	Brk 1 Op Time A	ms	Breaker 1 operating time phase A
12039	Brk 1 Op Time B	ms	Breaker 1 operating time phase B
12040	Brk 1 Op Time C	ms	Breaker 1 operating time phase C
12041	Brk 1 Op Time	ms	Breaker 1 operating time
12042	Brk 1 Arc Amp A	kA2-cyc	Breaker 1 arcing amp phase A
12044	Brk 1 Arc Amp B	kA2-cyc	Breaker 1 arcing amp phase B
12046	Brk 1 Arc Amp C	kA2-cyc	Breaker 1 arcing amp phase C
12048	Brk 1 Amp Max A	kA	Breaker 1 amp max phase A
12050	Brk 1 Amp Max B	kA	Breaker 1 amp max phase B
12052	Brk 1 Amp Max C	kA	Breaker 1 amp max phase C
12054	Brk 2 Acc Arc Amp A	kA2-cyc	Breaker 2 Acc arcing amp phase A
12056	Brk 2 Acc Arc Amp B	kA2-cyc	Breaker 2 Acc arcing amp phase B
12058	Brk 2 Acc Arc Amp C	kA2-cyc	Breaker 2 Acc arcing amp phase C
12060	Brk 2 Op Time A	ms	Breaker 2 operating time phase A
12061	Brk 2 Op Time B	ms	Breaker 2 operating time phase B
12062	Brk 2 Op Time C	ms	Breaker 2 operating time phase C
12063	Brk 2 Op Time	ms	Breaker 2 operating time
12064	Brk 2 Arc Amp A	kA2-cyc	Breaker 2 arcing amp phase A
12066	Brk 2 Arc Amp B	kA2-cyc	Breaker 2 arcing amp phase B
12068	Brk 2 Arc Amp C	kA2-cyc	Breaker 2 arcing amp phase C

Decimal address	FlexAnalog name	Units	Description
12070	Brk 2 Amp Max A	kA	Breaker 2 amp max phase A
12072	Brk 2 Amp Max B	kA	Breaker 2 amp max phase B
12074	Brk 2 Amp Max C	kA	Breaker 2 amp max phase C
12076	Brk 3 Acc Arc Amp A	kA2-cyc	Breaker 3 Acc arcing amp phase A
12078	Brk 3 Acc Arc Amp B	kA2-cyc	Breaker 3 Acc arcing amp phase B
12080	Brk 3 Acc Arc Amp C	kA2-cyc	Breaker 3 Acc arcing amp phase C
12082	Brk 3 Op Time A	ms	Breaker 3 operating time phase A
12083	Brk 3 Op Time B	ms	Breaker 3 operating time phase B
12084	Brk 3 Op Time C	ms	Breaker 3 operating time phase C
12085	Brk 3 Op Time	ms	Breaker 3 operating time
12086	Brk 3 Arc Amp A	kA2-cyc	Breaker 3 arcing amp phase A
12088	Brk 3 Arc Amp B	kA2-cyc	Breaker 3 arcing amp phase B
12090	Brk 3 Arc Amp C	kA2-cyc	Breaker 3 arcing amp phase C
12092	Brk 3 Amp Max A	kA	Breaker 3 amp max phase A
12094	Brk 3 Amp Max B	kA	Breaker 3 amp max phase B
12096	Brk 3 Amp Max C	kA	Breaker 3 amp max phase C
12306	Oscill Num Triggers	---	Oscillography number of triggers
13504	DCmA Ip 1	mA	DCmA input 1 actual value
13506	DCmA Ip 2	mA	DCmA input 2 actual value
13508	DCmA Ip 3	mA	DCmA input 3 actual value
13510	DCmA Ip 4	mA	DCmA input 4 actual value
13512	DCmA Ip 5	mA	DCmA input 5 actual value
13514	DCmA Ip 6	mA	DCmA input 6 actual value
13516	DCmA Ip 7	mA	DCmA input 7 actual value
13518	DCmA Ip 8	mA	DCmA input 8 actual value
13520	DCmA Ip 9	mA	DCmA input 9 actual value
13522	DCmA Ip 10	mA	DCmA input 10 actual value
13524	DCmA Ip 11	mA	DCmA input 11 actual value
13526	DCmA Ip 12	mA	DCmA input 12 actual value
13528	DCmA Ip 13	mA	DCmA input 13 actual value
13530	DCmA Ip 14	mA	DCmA input 14 actual value
13532	DCmA Ip 15	mA	DCmA input 15 actual value
13534	DCmA Ip 16	mA	DCmA input 16 actual value
13536	DCmA Ip 17	mA	DCmA input 17 actual value
13538	DCmA Ip 18	mA	DCmA input 18 actual value
13540	DCmA Ip 19	mA	DCmA input 19 actual value
13542	DCmA Ip 20	mA	DCmA input 20 actual value
13544	DCmA Ip 21	mA	DCmA input 21 actual value
13546	DCmA Ip 22	mA	DCmA input 22 actual value
13548	DCmA Ip 23	mA	DCmA input 23 actual value
13550	DCmA Ip 24	mA	DCmA input 24 actual value
13552	RTD Ip 1	---	RTD input 1 actual value
13553	RTD Ip 2	---	RTD input 2 actual value
13554	RTD Ip 3	---	RTD input 3 actual value
13555	RTD Ip 4	---	RTD input 4 actual value
13556	RTD Ip 5	---	RTD input 5 actual value

A

Decimal address	FlexAnalog name	Units	Description
13557	RTD Ip 6	---	RTD input 6 actual value
13558	RTD Ip 7	---	RTD input 7 actual value
13559	RTD Ip 8	---	RTD input 8 actual value
13560	RTD Ip 9	---	RTD input 9 actual value
13561	RTD Ip 10	---	RTD input 10 actual value
13562	RTD Ip 11	---	RTD input 11 actual value
13563	RTD Ip 12	---	RTD input 12 actual value
13564	RTD Ip 13	---	RTD input 13 actual value
13565	RTD Ip 14	---	RTD input 14 actual value
13566	RTD Ip 15	---	RTD input 15 actual value
13567	RTD Ip 16	---	RTD input 16 actual value
13568	RTD Ip 17	---	RTD input 17 actual value
13569	RTD Ip 18	---	RTD input 18 actual value
13570	RTD Ip 19	---	RTD input 19 actual value
13571	RTD Ip 20	---	RTD input 20 actual value
13572	RTD Ip 21	---	RTD input 21 actual value
13573	RTD Ip 22	---	RTD input 22 actual value
13574	RTD Ip 23	---	RTD input 23 actual value
13575	RTD Ip 24	---	RTD input 24 actual value
13576	RTD Ip 25	---	RTD input 25 actual value
13577	RTD Ip 26	---	RTD input 26 actual value
13578	RTD Ip 27	---	RTD input 27 actual value
13579	RTD Ip 28	---	RTD input 28 actual value
13580	RTD Ip 29	---	RTD input 29 actual value
13581	RTD Ip 30	---	RTD input 30 actual value
13582	RTD Ip 31	---	RTD input 31 actual value
13583	RTD Ip 32	---	RTD input 32 actual value
13584	RTD Ip 33	---	RTD input 33 actual value
13585	RTD Ip 34	---	RTD input 34 actual value
13586	RTD Ip 35	---	RTD input 35 actual value
13587	RTD Ip 36	---	RTD input 36 actual value
13588	RTD Ip 37	---	RTD input 37 actual value
13589	RTD Ip 38	---	RTD input 38 actual value
13590	RTD Ip 39	---	RTD input 39 actual value
13591	RTD Ip 40	---	RTD input 40 actual value
13592	RTD Ip 41	---	RTD input 41 actual value
13593	RTD Ip 42	---	RTD input 42 actual value
13594	RTD Ip 43	---	RTD input 43 actual value
13595	RTD Ip 44	---	RTD input 44 actual value
13596	RTD Ip 45	---	RTD input 45 actual value
13597	RTD Ip 46	---	RTD input 46 actual value
13598	RTD Ip 47	---	RTD input 47 actual value
13599	RTD Ip 48	---	RTD input 48 actual value
13600	Ohm Inputs 1 Value	Ohms	Ohm inputs 1 value
13601	Ohm Inputs 2 Value	Ohms	Ohm inputs 2 value
14189	PTP–IRIG-B Delta	ns	PTP time minus IRIG-B time

A

Decimal address	FlexAnalog name	Units	Description
24432	Communications Group	---	Groups communications group
24447	Active Setting Group	---	Current setting group
32768	Tracking Frequency	Hz	Terminal tracking frequency
39168	FlexElement 1 Value	---	FlexElement 1 actual value
39170	FlexElement 2 Value	---	FlexElement 2 actual value
39172	FlexElement 3 Value	---	FlexElement 3 actual value
39174	FlexElement 4 Value	---	FlexElement 4 actual value
39176	FlexElement 5 Value	---	FlexElement 5 actual value
39178	FlexElement 6 Value	---	FlexElement 6 actual value
39180	FlexElement 7 Value	---	FlexElement 7 actual value
39182	FlexElement 8 Value	---	FlexElement 8 actual value
45584	RxGOOSE Analog 1	---	RxGOOSE analog input 1
45586	RxGOOSE Analog 2	---	RxGOOSE analog input 2
45588	RxGOOSE Analog 3	---	RxGOOSE analog input 3
45590	RxGOOSE Analog 4	---	RxGOOSE analog input 4
45592	RxGOOSE Analog 5	---	RxGOOSE analog input 5
45594	RxGOOSE Analog 6	---	RxGOOSE analog input 6
45596	RxGOOSE Analog 7	---	RxGOOSE analog input 7
45598	RxGOOSE Analog 8	---	RxGOOSE analog input 8
45600	RxGOOSE Analog 9	---	RxGOOSE analog input 9
45602	RxGOOSE Analog 10	---	RxGOOSE analog input 10
45604	RxGOOSE Analog 11	---	RxGOOSE analog input 11
45606	RxGOOSE Analog 12	---	RxGOOSE analog input 12
45608	RxGOOSE Analog 13	---	RxGOOSE analog input 13
45610	RxGOOSE Analog 14	---	RxGOOSE analog input 14
45612	RxGOOSE Analog 15	---	RxGOOSE analog input 15
45614	RxGOOSE Analog 16	---	RxGOOSE analog input 16
45616	RxGOOSE Analog 17	---	RxGOOSE analog input 17
45618	RxGOOSE Analog 18	---	RxGOOSE analog input 18
45620	RxGOOSE Analog 19	---	RxGOOSE analog input 19
45622	RxGOOSE Analog 20	---	RxGOOSE analog input 20
45624	RxGOOSE Analog 21	---	RxGOOSE analog input 21
45626	RxGOOSE Analog 22	---	RxGOOSE analog input 22
45628	RxGOOSE Analog 23	---	RxGOOSE analog input 23
45630	RxGOOSE Analog 24	---	RxGOOSE analog input 24
45632	RxGOOSE Analog 25	---	RxGOOSE analog input 25
45634	RxGOOSE Analog 26	---	RxGOOSE analog input 26
45636	RxGOOSE Analog 27	---	RxGOOSE analog input 27
45638	RxGOOSE Analog 28	---	RxGOOSE analog input 28
45640	RxGOOSE Analog 29	---	RxGOOSE analog input 29
45642	RxGOOSE Analog 30	---	RxGOOSE analog input 30
45644	RxGOOSE Analog 31	---	RxGOOSE analog input 31
45646	RxGOOSE Analog 32	---	RxGOOSE analog input 32
63616	Bus 1 M_Id A	---	Bus M_Id A
63618	Bus 1 M_Id B	---	Bus M_Id B
63620	Bus 1 M_Id C	---	Bus M_Id C

A

Decimal address	FlexAnalog name	Units	Description
63622	Bus 1 M_Ir A	---	Bus M_Ir A
63624	Bus 1 M_Ir B	---	Bus M_Ir B
63626	Bus 1 M_Ir C	---	Bus M_Ir C
63628	Bus 1 d_Ir A	---	Bus d_Ir A
63630	Bus 1 d_Ir B	---	Bus d_Ir B
63632	Bus 1 d_Ir C	---	Bus d_Ir C

B30 Bus Differential System

Appendix B: RADIUS server configuration

B.1 RADIUS server configuration

The following procedure is an example of how to set up a simple RADIUS server. You install the RADIUS server software on a separate computer. In this example, we use FreeRADIUS third-party software.

1. Download and install FreeRADIUS from www.freeradius.org as the RADIUS server. This is a Windows 32-bit installation that is known to work. If you try another third-party tool and it does not work, use the FreeRADIUS software from freeradius.net.
2. Open the radiusd.conf file in the <Path_to_Radius>\etc\raddb folder, locate the "bind_address" field, and enter your RADIUS server IP address. An example is

   ```
   bind_address = 10.14.61.122
   ```

   Text editor software that supports direct editing and saving of UNIX text encodings and line breaks, such as EditPad Lite, is needed for this editing.
3. In the users.conf file in the <Path_to_Radius>\etc\raddb folder, add the following text to configure a user "Tester" with an Administrator role.

   ```
   Tester                User-Password == "TesterPw1#"
                         GE-UR-Role = Administrator
   ```
4. In the clients.conf file in the <Path_to_Radius>\etc\raddb folder, add the following text to define the UR as a RADIUS client, where in this example the client IP address is 10.14.61.132, the shared secret specified here is also configured on the UR device for successful authentication, and the shortname is a short, optional alias that can be used in place of the IP address.

   ```
   client 10.14.61.132 {
   secret = Testing!123
   shortname = ur1-test
   }
   ```

   Alternatively, you may specify one secret for a network of clients, where in the example below the clients are all within the 10.14.61.0/24 subnet and the shared secret specified here is also configured on all the UR devices in the subnet for successful authentication.

   ```
   client 10.14.61.0/24 {
   secret = Testing!123
   shortname = net1-test
   }
   ```
5. In the <Path_to_Radius>\etc\raddb folder, create a file called dictionary.ge and add the following content.

B

```
# ##########################################################
#  GE VSAs
##########################################################

VENDOR                          GE              2910

# Management authorization
BEGIN-VENDOR                    GE

# Role ID
ATTRIBUTE                       GE-UR-Role      1           integer

# GE-UR-ROLE values
VALUE GE-UR-Role                Administrator   1
VALUE GE-UR-Role                Supervisor      2
VALUE GE-UR-Role                Engineer        3
VALUE GE-UR-Role                Operator        4
VALUE GE-UR-Role                Observer        5

END-VENDOR                      GE
##############################################################
```

6. In the dictionary file in the <Path_to_Radius>\etc\raddb folder, add the following line.

   ```
   $INCLUDE dictionary.ge
   ```

   For example, the file can look like the following:

   ```
   $INCLUDE ../share/freeradius/dictionary
   $INCLUDE dictionary.ge
   ```

7. For the first start, run the RADIUS server in debug mode to ensure that there are no compiling errors.

   ```
   <Path_to_Radius>/start_radiusd_debug.bat
   ```

8. Set up the RADIUS parameters on the UR as follows.

   8.1. If logging in, select **Device** for the **Authentication Type**, and use Administrator for the **User Name**. The default password is "ChangeMe1#".

   8.2. Access **Settings > Product Setup > Security**. Configure the IP address (10.14.61.122 in this example) and ports (default values in this example) for the RADIUS server. Leave the GE vendor ID field at the default of 2910. Update the RADIUS shared secret (Testing!123 in this example) as specified in the clients.conf file. Restart the relay for the IP address and port changes to take effect.

9. Verify operation. Log in to the UR software as follows. In the login window, select **Server** as the **Authentication Type**, enter the user name entered (for example user name Tester and password "TesterPw1#"). Check that the RADIUS server log file shows the access with an "Access-Accept" entry.

   Recall that if you tried another third-party tool and it did not work, you can use the FreeRADIUS software from freeradius.net.

B30 Bus Differential System

Appendix C: Command line interface

C.1 Command line interface

SetupCLI is a command line interface to communicate with the EnerVista UR Setup software. Commands can be sent from a DOS prompt or a Windows batch file.

The interface is installed with the EnerVista software. Its default location is similar to C:\Program Files\EnerVista\Tools\SetupCLI

The EnerVista software needs to be installed on a computer to run the command line interface. The command line interface does not provide a remote connection to a computer running the EnerVista software.

Items to note are as follows:

- Works with EnerVista UR Setup version 6.10 and later
- Available in English only
- The graphical user interface of the software is not available concurrently with the command line interface
- It does not support concurrent commands
- It has limited functionality with CyberSentry
- It does not interface with UR Engineer
- It does not work when EnerVista UR Setup security is enabled, meaning when login is required

Command syntax is as follows:

- Options enclosed in [ ] are optional
- Values enclosed in < > are replaced with your own values
- <Application> is replaced with the EnerVista software to receive the command. Use "URPC" for EnerVista UR Setup.
- <device> is the UR device name, as displayed in the **Device Name** field of the Device Setup window and listed in the Online Window. Use quotes with spaces, such as "B30 Belfort".
- "-s" can be used with any command to suppress error messages
- All commands, their return codes, and error description are logged in the file C:\ProgramData\EnerVista\Tools\SetupCLI\SetupCLI.log
- When the Supervisor account is enabled, the 'Lock Relay' setting must first be changed to No before the putsettings, inservice, or reboot command can be used. This setting cannot be changed using the command line interface.
- Use quotes ("") to enclose any parameter containing a space
- Commands, options, and parameters are case sensitive

- All commands have a return code of 0-255. 0 indicates success and 1-255 indicate different errors
- If SetupCLI is automated (in a batch file), make sure that only a single batch is running at a time. SetupCLI does not support concurrent operations.

To run the command line interface:

1. In Windows, click the **Start** button, enter **cmd**, and press the **Enter** key. After prompting for permission, the Windows command window opens.
2. Enter `SetupCLI` followed by the action to execute. An example of use is to enter "SetupCLI -h" to display help, specifically the commands and explanations outlined here.

Figure C-1: Command line interface run in the command window

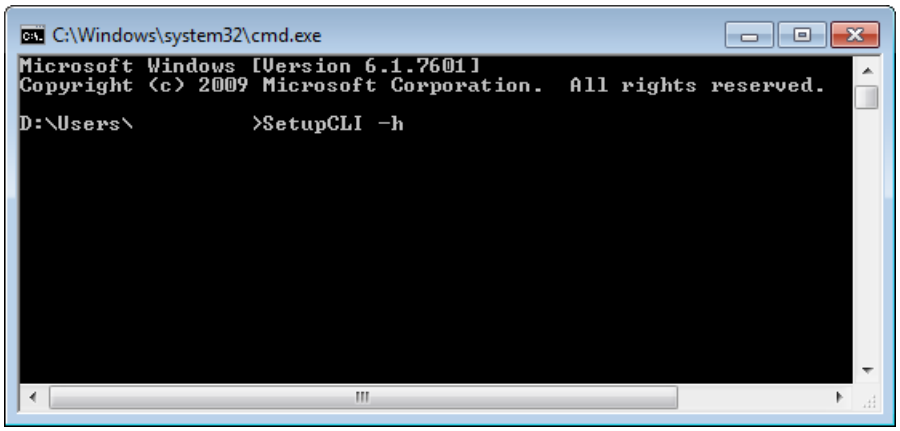

SetupCLI -h

Display help.

It displays the content outline here.

SetupCLI <Application> start [-c] [-s]

Launch application with name <Application>.

To start in client mode, which is the graphical user interface, include option '-c'. Before use, the software must be idle without any windows open. Any activity or open windows can cause unexpected behavior. When in client mode, do not use Launchpad's Site Management feature.

To suppress errors, include option -s.

Example: SetupCLI URPC start -c

SetupCLI <Application> exit [-s]

Exit application with name <Application>.

Example: SetupCLI URPC exit

SetupCLI <Application> login -d <device> [-A <authentication type>] [-a <account>] -w <password> [-s]

Authenticate with device <device> using password <password>.

For non-CyberSentry devices — Set <authentication type> to "traditional". Note that <authentication type> defaults to "traditional" if not specified. Set <account> to "COMMANDS" or "SETTINGS". If not specified, the SETTINGS account is used.

Example: SetupCLI URPC login -d "C30 Melbourne" -A traditional -a SETTINGS -w 1password1

Example of a batch file that checks for an error (this batch file uses standard batch file operations to check the return code (ERRORLEVEL) and jump to an error handler):

```
SetupCLI URPC start
SetupCLI URPC login -d demoDevice -a SETTINGS -w WrongPassword -A traditional
IF NOT ERRORLEVEL 0 GOTO FAILED
SetupCLI URPC putsettings -d demoDevice  -f "example file.urs"
SetupCLI URPC inservice -d demoDevice
SetupCLI URPC reboot -d demoDevice
SetupCLI URPC exit
exit

:FAILED
echo Please try again
exit
```

For CyberSentry devices with local authentication — Set <authentication type> to "local" . Set <account> to "Supervisor", "Administrator", "Engineer", "Operator", or "Observer".

For CyberSentry devices with RADIUS authentication — Set <authentication type> to "radius". Set <account> to the user's account on the RADIUS server.

SetupCLI <Application> logout -d <device> [-s]

Log out of device <device>.

Example: SetupCLI URPC logout -d C30

SetupCLI <Application> getsettings -d <device> -f <File> [-s]

Read settings from device <device> and save them to the .urs file <File>. The <File> must not already exist. The default path to the output file is C:\Users\Public\Public Documents\GE Power Management\URPC\Data

Example: SetupCLI URPC getsettings -d C30 -f "C30 Markham.urs"

Example of a batch file to retrieve a settings file:

```
SetupCLI URPC start
SetupCLI URPC getsettings -d demoDevice -f C:\example.urs
SetupCLI URPC exit
```

Example of a batch file to retrieve a settings file from a relay that requires RADIUS authentication:

```
SetupCLI URPC start
SetupCLI URPC login -d demoDevice -a %1 -w %2 -A radius
SetupCLI URPC getsettings -d demoDevice -f "example file.urs"
SetupCLI URPC logout -d demoDevice
SetupCLI URPC exit
```

Although a user name and password could have been entered in this batch file, it would have created a security risk. Batch files allow you to pass in runtime parameters and refer to them in your script as %1, %2, and so on. For example, if this file is called example.bat, one calls it as follows: "example.bat MyUserName MyPassword"

SetupCLI <Application> putsettings -d <device> -f <File> [-s]

Write the settings file <File> to the device <device>.

For CyberSentry devices, putsettings is only supported for users with the "Administrator" role.

Example: SetupCLI URPC putsettings -d C30 -f "C30 Markham.urs"

C

SetupCLI <Application> compare -f <File1> -r <File2> -o <OutputFile> [-s]

Compare settings files <File1> and <File2>, and save output to <OutputFile>.

Example: SetupCLI URPC compare -f may.urs -r september.urs -o compared.txt

Batch file example that retrieves a settings file, compares it with an existing settings file, and opens the resulting comparison file:

```
SetupCLI URPC start
SetupCLI URPC getsettings -d demoDevice  -f devicefile.urs
SetupCLI URPC compare -f existingfile.urs -r devicefile.urs -o output.txt
```

The output is similar to the following:

```
Comparing settings file aaa.urs : C:\Users\Public\Public Documents\GE Power Management\URPC\Data\ with bbb.urs
: C:\Users\Public\Public Documents\GE Power Management\URPC\Data\

 #    Setting Name                (Group,Module,Item)   Value

 1 + Default Message Timeout          (1,1,1) = 299 s
 2 - Default Message Timeout          (1,1,1) = 300 s
 3 + Flash Message Time               (1,1,1) = 0.9 s
 4 - Flash Message Time               (1,1,1) = 1.0 s
```

SetupCLI <Application> inservice -d <device> [-n] [-s]

Put the device in service. Include option -n to take the device out of service.

Example: SetupCLI URPC inservice -d C30

SetupCLI <Application> reboot -d <device> [-s]

Reboot the relay <device>. This is necessary after changing IEC 61850 settings and aggregator source settings.

Example: SetupCLI URPC reboot -d "C30_Instanbul"

SetupCLI <Application> adddevice -I <IP Address> -S <Slave Address> -P <Modbus Port>

Connect to a device using its IP address, slave address, and Modbus port. Show the device in the EnerVista interface under the SetupCLI Site as DEV@SETUP_CLI.

EnerVista UR Setup 7.30 or higher supports this command.

Figure C-2: Device added using IP address

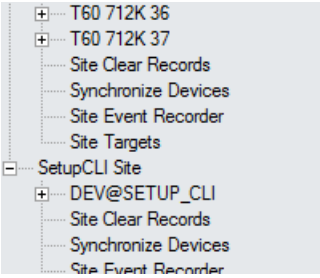

The device is named as DEV@SETUP_CLI, which is used as the device name required by the <device> parameter of other SetupCLI commands.

The device name DEV@SETUP_CLI is always assigned to the device that is connected most recently by performing 'adddevice' command. It means that the Application only keeps up to one device named as DEV@SETUP_CLI, the 'adddevice' command disconnects/deletes the device DEV@SETUP _CLI that was connected previously by performing 'adddevice' command.

The device name DEV@SETUP_CLI is never used to configure/connect to a device through the graphical user interface.

Example of a batch file using a device IP address to retrieve its settings file:

```
SetupCLI URPC start
SetupCLI URPC adddevice -I 192.168.140.113 -S 113 -P 502
SetupCLI URPC getsettings -d DEV@SETUP_CLI -f C:\example.urs
SetupCLI URPC exit
```

After connecting the device using IP address, the device name DEV@SETUP_CLI is used to identify this device in 'getsettings' command.

Example of a batch file using a device IP address to retrieve a settings file when RADIUS authentication is required:

```
SetupCLI URPC start
SetupCLI URPC adddevice -I 192.168.140.113 -S 113 -P 502
SetupCLI URPC login -d DEV@SETUP_CLI -a %1 -w %2 -A radius
SetupCLI URPC getsettings -d DEV@SETUP_CLI -f "example file.urs"
SetupCLI URPC logout -d DEV@SETUP_CLI
SetupCLI URPC exit
```

DEV@SETUP_CLI has to be used as the device name in the commands followed by the 'adddevice' command.

C

B30 Bus Differential System

Appendix D: Miscellaneous

This chapter provides the warranty and revision history.

D.1 Warranty

For products shipped as of 1 October 2013, GE Grid Solutions warrants most of its GE manufactured products for 10 years. For warranty details including any limitations and disclaimers, see the Terms and Conditions at

http://www.gegridsolutions.com/multilin/warranty.htm

For products shipped before 1 October 2013, the standard 24-month warranty applies.

D.2 Revision history

The tables outline the releases and revision history of this document.

Table D-1: Revision history (English)

Manual P/N	B30 revision	Release date	ECO
1601-0109-B1	2.4x	08 September 2000	N/A
1601-0109-B2	2.4x	03 November 2000	URB-001
1601-0109-B3	2.6x	09 March 2001	URB-002
1601-0109-B4	2.8x	26 September 2001	URB-003
1601-0109-B5	2.9x	03 December 2001	URB-004
1601-0109-B6	2.6x	27 February 2004	URX-120
1601-0109-C1	3.0x	02 July 2002	URB-007
1601-0109-C2	3.1x	30 August 2002	URB-008
1601-0109-C3	3.0x	18 November 2002	URB-009
1601-0109-C4	3.1x	18 November 2002	URB-010
1601-0109-C5	3.0x	11 February 2003	URB-012
1601-0109-C6	3.1x	11 February 2003	URB-013
1601-0109-D1	3.2x	11 February 2003	URB-015
1601-0109-D2	3.2x	02 June 2003	URX-084
1601-0109-E1	3.3x	01 May 2003	URX-080

Manual P/N	B30 revision	Release date	ECO
1601-0109-E2	3.3x	29 May 2003	URX-083
1601-0109-F1	3.4x	10 December 2003	URX-111
1601-0109-F2	3.4x	09 February 2004	URX-115
1601-0109-G1	4.0x	23 March 2004	URX-123
1601-0109-G2	4.0x	17 May 2004	URX-136
1601-0109-H1	4.2x	30 June 2004	URX-145
1601-0109-H2	4.2x	23 July 2004	URX-151
1601-0109-J1	4.4x	15 September 2004	URX-156
1601-0109-J2	4.4x	05 January 2005	URX-173
1601-0109-K1	4.6x	15 February 2005	URX-176
1601-0109-L1	4.8x	05 August 2005	URX-202
1601-0109-M1	4.9x	15 December 2005	URX-208
1601-0109-M2	4.9x	27 February 2006	URX-214
1601-0109-N1	5.0x	31 March 2006	URX-217
1601-0109-N2	5.0x	26 May 2006	URX-220
1601-0109-P1	5.2x	23 October 2006	URX-230
1601-0109-P2	5.2x	24 January 2007	URX-232
1601-0109-R1	5.4x	26 June 2007	URX-242
1601-0109-R2	5.4x	31 August 2007	URX-246
1601-0109-R3	5.4x	17 October 2007	URX-251
1601-0109-S1	5.5x	7 December 2007	URX-253
1601-0109-S2	5.5x	22 February 2008	URX-258
1601-0109-S3	5.5x	12 March 2008	URX-260
1601-0109-T1	5.6x	27 June 2008	08-0390
1601-0109-U1	5.7x	29 May 2009	09-0938
1601-0109-U2	5.7x	30 September 2009	09-1165
1601-0109-V1	5.8x	28 May 2010	09-1457
1601-0109-V2	5.8x	04 January 2011	11-2237
1601-0109-W1	5.9x	12 January 2011	11-2227
1601-0109-X1	6.0x	21 December 2011	11-2840
1601-0109-X2	6.0x	5 April 2012	12-3254
1601-0109-Y1	7.0x	30 September 2012	12-3529
1601-0109-Y2	7.0x	11 November 2012	12-3601
1601-0109-Z1	7.1x	30 March 2013	13-0126
1601-0109-AA1	7.2x	1 August 2013	13-0401
1601-0109-AB1	7.3x	7 November 2014	14-1408
1601-0109-AB2	7.3x	1 September 2015	15-2215
1601-0109-AC1	7.40x	8 December 2016	16-3319
1601-0109-AE1	7.41x	31 January 2017	17-3427
1601-0109-AE3	7.4x	28 April 2017	17-3561
1601-0109-AE4	7.4x	1 April 2021	21-6291

D

Table D-2: Major changes for B30 manual version AE4 (English)

Page	Description
---	General revision

Page	Description
2-	Updated Dropout Level specification for several elements, changing percent range to a number
2-	Deleted end-of-manufacturing modules 2G, 74, 75, 7E, 7L from order code tables
2-8	Updated order codes from SH / SL to RH / RL for the redundant power supply for horizontal units. The power supply modules were upgraded in 2014 to SH and SL, but the order codes when purchasing a UR remain as RH and RL so that customers do not need to change order codes. The order codes for the power supply replacement modules are correct as SH and SL.
2-8	Added order codes for Inter-relay communication modules in U column for horizontal unit
2-19	Updated Bus Differential specification for Characteristic Accuracy
3-	Updated Typical Wiring Diagram at CPU module, CPU Module Communications Wiring figure, and Options for IRIG-B Connection figure
10-5	Added Convert Device Settings section
B-	Updated RADIUS chapter

Table D-3: Major changes for B30 manual version AE3 (English)

Page	Description
---	General revision
2-	Updated order codes
10-5	Added Copy Settings to Other Device section

Table D-4: Major changes for B30 manual version AE1 (English)

Page	Description
---	General revision
---	Added routable GOOSE content in chapters 2 and 5
3-36	Updated RS422 and Fiber Interface Connection figure for the clock channels (from 7a and 7b to 1a and 1b)
4-	Added Engineer content
5-	Updated IEC 61850 content
A-	Updated FlexAnalog table for most UR products

Table D-5: Major changes for B30 manual version AC1 (English)

Page	Description
---	General revision. Added online help and updated generic online help.
---	Deleted EAC logo from title page and deleted EAC certification from Approvals specifications because document not translated into Russian
---	Added two Phase Directional Overcurrent elements throughout document, including ANSI table, specifications, FlexLogic operands table, settings
---	Added Data Logger content to product description, specifications, settings, actual values, commands, Modbus memory map, IMD table
---	Added Breaker Arcing Current content to product description, specifications, FlexLogic operands table, settings, FlexElement tables, actual values, FlexAnalog table, features per product table, Modbus memory map, IMD table
---	Added Phase Overvoltage content to product description, specifications, FlexLogic operands table, settings, features per product table, Modbus memory map, IMD table
---	Added Breaker Restrike content to product description, specifications, FlexLogic operands table, settings, features per product table, Modbus memory map, IMD table
---	Updated number of Phase Instantaneous Overcurrent elements in FlexLogic operands table, settings, features per product table, Modbus memory map
2-	Updated several specifications, such as TOC, IOC, number of FlexLogic lines
4-30	Added FlexLogic Design and Monitoring using Engineer section to end of Interfaces chapter
5-38	Added PRT FUNCTION settings in Network section to enable/disable each Ethernet port
5-49	Updated IEC 61850 section
5-169	Updated number of FlexLogic lines from 512 to 1024 in FlexLogic Equation Editor settings section
10-1	Added Monitoring section

Page	Description
10-2	Added Retrieve Files section
C-	Added Command Line Interface appendix

D

B30 Bus Differential System

Abbreviations

A	Ampere
AC	Alternating Current
A/D	Analog to Digital
AE	Accidental Energization, Application Entity
AMP	Ampere
ANG	Angle
ANSI	American National Standards Institute
AR	Automatic Reclosure
ARP	Address Resolution Protocol
ASDU	Application-layer Service Data Unit
ASYM	Asymmetry
AUTO	Automatic
AUX	Auxiliary
AVG	Average
AWG	American Wire Gauge
BCS	Best Clock Selector
BER	Bit Error Rate
BF	Breaker Fail
BFI	Breaker Failure Initiate
BKR	Breaker
BLK	Block
BLKG	Blocking
BNC	Bayonet Neill-Concelman
BPNT	Breakpoint of a characteristic
BRKR	Breaker
CAP	Capacitor
CC	Coupling Capacitor
CCVT	Coupling Capacitor Voltage Transformer
CFG	Configure / Configurable
.CFG	Filename extension for oscillography files
CHK	Check
CHNL	Channel
CID	Configured IED Description
CLS	Close
CLSD	Closed
CMND	Command
CMPRSN	Comparison
CO	Contact Output
COM	Communication
COMM	Communications
COMP	Compensated, Comparison
CONN	Connection
CONT	Continuous, Contact
CO-ORD	Coordination
CPU	Central Processing Unit
CRC	Cyclic Redundancy Code/Check
CRT, CRNT	Current
CSA	Canadian Standards Association
CT	Current Transformer
CVT	Capacitive Voltage Transformer
D/A	Digital to Analog
DC (dc)	Direct Current
DCE	Data Communications Equipment
DCS	Distributed Control System
DD	Disturbance Detector
DFLT	Default
DGNST	Diagnostics
DIFF	Differential
DIR	Directional
DISCREP	Discrepancy
DIST	Distance
DMD	Demand
DNP	Distributed Network Protocol
DPO	Dropout
DPS	Double-Point Status
DSP	Digital Signal Processor
DST	Daylight Savings Time
dt	Rate of Change
DTT	Direct Transfer Trip
DUTT	Direct Under-reaching Transfer Trip
EGD	Ethernet Global Data
ENCRMNT	Encroachment
EPRI	Electric Power Research Institute
.EVT	Filename extension for event recorder files
EXT	Extension, External
F	Field
FAIL	Failure
FD	Fault Detector
FDH	Fault Detector high-set
FDL	Fault Detector low-set
FLA	Full Load Current
FO	Fiber Optic
FPGA	Field-programmable Gate Array
FREQ	Frequency
FSK	Frequency-Shift Keying
FTP	File Transfer Protocol
FxE	FlexElement™
FWD	Forward
G	Generator

GDOI	Group Domain of Interpretation
GE	General Electric
GND	Ground
GNTR	Generator
GoCB	GOOSE Control Block
GOOSE	General Object Oriented Substation Event
GPS	Global Positioning System
GSU	Generator Step-Up
HARM	Harmonic / Harmonics
HCT	High Current Time
HGF	High-Impedance Ground Fault (CT)
HIZ	High-Impedance and Arcing Ground
HMI	Human-Machine Interface
HTTP	Hyper Text Transfer Protocol
HV	High Voltage
HYB	Hybrid
Hz	Hertz
I	Instantaneous
I_0	Zero Sequence current
I_1	Positive Sequence current
I_2	Negative Sequence current
IA	Phase A current
IAB	Phase A minus B current
IB	Phase B current
IBC	Phase B minus C current
IC	Phase C current
ICA	Phase C minus A current
ICD	IED Capability Description
ID	Identification
IED	Intelligent Electronic Device
IEC	International Electrotechnical Commission
IEEE	Institute of Electrical and Electronic Engineers
IG	Ground (not residual) current
Igd	Differential Ground current
IGMP	Internet Group Management Protocol
IID	Instantiated IED Capability Description
IN	CT Residual Current (3I0) or Input
INC SEQ	Incomplete Sequence
INIT	Initiate
INST	Instantaneous
INV	Inverse
I/O	Input/Output
IOC	Instantaneous Overcurrent
IOV	Instantaneous Overvoltage
IRC	Inter-Relay Communication
IRIG	Inter-Range Instrumentation Group
ISO	International Standards Organization
IUV	Instantaneous Undervoltage
K0	Zero Sequence Current Compensation
kA	kiloAmpere
kV	kiloVolt
LED	Light Emitting Diode
LEO	Line End Open
LFT BLD	Left Blinder
LOOP	Loopback
LPU	Line Pickup
LRA	Locked-Rotor Current
LTC	Load Tap-Changer
LV	Low Voltage
mA	MilliAmpere
MAG	Magnitude
MAN	Manual / Manually
MAX	Maximum
MIC	Model Implementation Conformance
MIN	Minimum, Minutes
MMI	Man Machine Interface
MMS	Manufacturing Message Specification
MRT	Minimum Response Time
MSG	Message
MTA	Maximum Torque Angle
MTR	Motor
MVA	MegaVolt-Ampere (total 3-phase)
MVA_A	MegaVolt-Ampere (phase A)
MVA_B	MegaVolt-Ampere (phase B)
MVA_C	MegaVolt-Ampere (phase C)
MVAR	MegaVar (total 3-phase)
MVAR_A	MegaVar (phase A)
MVAR_B	MegaVar (phase B)
MVAR_C	MegaVar (phase C)
MVARH	MegaVar-Hour
MW	MegaWatt (total 3-phase)
MW_A	MegaWatt (phase A)
MW_B	MegaWatt (phase B)
MW_C	MegaWatt (phase C)
MWH	MegaWatt-Hour
N	Neutral
N/A, n/a	Not Applicable
NEG	Negative
NMPLT	Nameplate
NOM	Nominal
NTR	Neutral
O	Over
OC, O/C	Overcurrent
O/P, Op	Output
OP	Operate
OPER	Operate
OPERATG	Operating
O/S	Operating System
OSI	Open Systems Interconnect
OSB	Out-of-Step Blocking
OUT	Output
OV	Overvoltage
OVERFREQ	Overfrequency
OVLD	Overload
P	Phase
PC	Phase Comparison, Personal Computer
PCNT	Percent
PF	Power Factor (total 3-phase)
PF_A	Power Factor (phase A)
PF_B	Power Factor (phase B)
PF_C	Power Factor (phase C)
PFLL	Phase and Frequency Lock Loop
PHS	Phase
PICS	Protocol Implementation & Conformance Statement
PKP	Pickup
PLC	Power Line Carrier
POS	Positive
POTT	Permissive Over-reaching Transfer Trip
PP	Power Profile
PRESS	Pressure
PRI	Primary
PROT	Protection
PRP	Parallel Redundancy Protocol
PSEL	Presentation Selector
PTP	Precision Time Protocol
pu	Per Unit
PUIB	Pickup Current Block
PUIT	Pickup Current Trip
PUSHBTN	Pushbutton
PUTT	Permissive Under-reaching Transfer Trip
PWM	Pulse Width Modulated
PWR	Power
QUAD	Quadrilateral

R	Rate, Reverse
RA	Registration Authority
RCA	Reach Characteristic Angle
REF	Reference
REM	Remote
REV	Reverse
R-GOOSE	Routable GOOSE
RI	Reclose Initiate
RIP	Reclose In Progress
RGT BLD	Right Blinder
RMA	Return Materials Authorization
RMS	Root Mean Square
ROCOF	Rate of Change of Frequency
ROD	Remote Open Detector
RRTD	Remote Resistance Temperature Detector
RST	Reset
RSTR	Restrained
RTD	Resistance Temperature Detector
RTU	Remote Terminal Unit
RX (Rx)	Receive, Receiver
s	second
S	Sensitive
SAT	CT Saturation
SBO	Select Before Operate
SCADA	Supervisory Control and Data Acquisition
SCC	Serial Communication Controller
SCD	System Configuration Description
SCL	Substation Configuration Language
SEC	Secondary
SEL	Select / Selector / Selection
SENS	Sensitive
SEQ	Sequence
SFTP	Secure Shell (SSH) File Transfer Protocol, Secure File Transfer Protocol
SIR	Source Impedance Ratio
SNTP	Simple Network Time Protocol
SRC	Source
SSB	Single Side Band
SSEL	Session Selector
STATS	Statistics
SUPN	Supervision
SUPV	Supervise / Supervision
SV	Supervision, Service
SYNC	Synchrocheck
SYNCHCHK	Synchrocheck
T	Time, transformer
TC	Thermal Capacity
TCP	Transmission Control Protocol
TCU	Thermal Capacity Used
TD MULT	Time Dial Multiplier
TEMP	Temperature
TFTP	Trivial File Transfer Protocol
THD	Total Harmonic Distortion
TMR	Timer
TOC	Time Overcurrent
TOV	Time Overvoltage
TRANS	Transient
TRANSF	Transfer
TSEL	Transport Selector
TUC	Time Undercurrent
TUV	Time Undervoltage
TX (Tx)	Transmit, Transmitter
U	Under
UC	Undercurrent
UCA	Utility Communications Architecture
UDP	User Datagram Protocol
UL	Underwriters Laboratories
UNBAL	Unbalance
UR	Universal Relay
URC	Universal Recloser Control
.URS	Filename extension for settings files
UV	Undervoltage
V/Hz	Volts per hertz
V_0	Zero Sequence voltage
V_1	Positive Sequence voltage
V_2	Negative Sequence voltage
VA	Phase A voltage
VAB	Phase A to B voltage
VAG	Phase A to Ground voltage
VARH	Var-hour voltage
VB	Phase B voltage
VBA	Phase B to A voltage
VBG	Phase B to Ground voltage
VC	Phase C voltage
VCA	Phase C to A voltage
VCG	Phase C to Ground voltage
VF	Variable Frequency
VIBR	Vibration
VT	Voltage Transformer
VTFF	Voltage Transformer Fuse Failure
VTLOS	Voltage Transformer Loss Of Signal
WDG	Winding
WH	Watt-hour
w/ opt	With Option
WGS	World Geodetic System
WRT	With Respect To
X	Reactance
XDUCER	Transducer
XFMR	Transformer
Z	Impedance, Zone

B30 Bus Differential System

Index

Numerics

10BASE-F settings 5-31
7R module 3-39
7S module 3-38

A

AC current input specifications 2-24
AC current inputs 5-128
AC inputs 3-16
AC voltage input specifications 2-24
Access Violation message 3-65
Activate relay 3-51
Active setting group 5-169
Actual values 6-1
  monitor with Modbus Analyzer 10-1
Add Device to Offline Window preferences 10-9
Add module, check settings not defaulted 10-16
Add relay 3-55
Administrator
  add user account 5-13
  command to force logoff 7-4
  no automatic logout from front panel 5-20
  role for CyberSentry 2-5
Alarm LEDs 5-108
AND gate explained 4-53
ANSI device numbers 2-2
Apparent power 6-18
Application examples
  breaker trip circuit integrity 5-219
  contact inputs 5-238
  direct inputs and outputs 5-244
  latching outputs 5-241
  zoning 8-3
Apply settings to other device 10-7
Approvals 2-33
Architecture, relay 5-148
Arcing current 5-222
Audit list of port numbers 5-31
Authentication by device or server 5-15
Automatic discovery of UR devices 3-64
Auxiliary overvoltage
  FlexLogic operands 5-150
  logic 5-206
  settings 5-205
  specifications 2-20
Auxiliary voltage channel 3-16
Auxiliary voltage metering 6-18
AWG wire size 3-15, 3-38, 3-42, 3-44, 3-45

B

Back up settings 5-45, 10-8
Banks 5-6, 5-128
Battery
  disposal 10-18
  failure message 7-7
  replace 10-16
Baud rate 5-28
BLOCK setting 5-5
Breaker arcing current
  actual values 6-24
  clearing 5-26, 7-2
  FlexAnalogs A-11, A-12
  FlexLogic operands 5-151
  logic diagram 5-224
  measurement 5-223
  settings 5-222
  specifications 2-20

Breaker control
control of two breakers 4-28
dual breaker logic 5-135
FlexLogic operands 5-151
settings 5-132
with IEC 61850 5-76
Breaker failure
description 5-193
determination 5-194
FlexLogic operands 5-151
logic diagram 5-197, 5-198
main path sequence 5-195
settings 5-192, 5-195
specifications 2-20
Breaker flashover
FlexLogic operands 5-150
logic diagram 5-229
settings 5-225
specifications 2-20
Breaker restrike
FlexLogic operands 5-151
logic diagram 5-232
settings 5-230
specifications 2-20
Breaker-and-a-half scheme 5-5
Brightness 5-25
Bus
FlexAnalogs A-15
Bus differential
actual values 6-16
characteristic 5-171
FlexLogic operands 5-152
logic diagram 5-173
settings 5-170
specifications 2-18
Bus zone
actual values 6-16
settings 5-147

C

C37.94 communications 3-46, 3-49
Caution symbol in Offline Window 4-39
CE certification 2-33
Certification 2-33
Changes D-1
Channel
banks 5-128
tests 6-9
Check Log and Reboot message 7-7
CID file, SCD file 5-61, 5-63, 5-64
CID files 3-68, 5-45
import 10-11
import preferences 10-9
Circuit monitoring applications 5-217
Cleaning 2-33
Clear
files and records 10-21
LEDs 5-243
relay records using IEC 61850 5-81
relay records using settings 5-26
security logs 7-4
Clock
actual values 6-7
IRIG-B 3-33
PTP 5-97
set on front panel 7-3
settings 5-95
Close
HTTP port 5-86
IEC 60870-5-104 port 5-88
Modbus port 5-37
SNTP port 5-99
TFTP port 5-87
Web access port 5-86
Comm status remaining connections 6-10
Command line interface to software C-1
Command password 4-29, 5-9, 5-10
Commands
control user accounts 5-13
menu 7-1
with IEC 61850 5-81
Communications
10BASE-F 5-31
connecting to the UR 3-62, 3-65
DNP 5-38
EGD 5-89
HTTP 5-86
IEC 60870-5-10 5-90
IEC 60870-5-104 5-87
inter-relay specifications 2-29
Modbus registers 5-95
Modbus settings 5-37
modem 3-64
Protocol selection 5-37
RS232 ..... 3-31, 5-28
RS485 ..... 3-32, 5-28
settings 5-31, 5-38
specifications 2-28, 2-29
timeout 5-37
web server 5-86
Compare settings 10-7
Compliance 2-33
COMTRADE files, view 4-50
Conducted RFI specifications 2-32
Connection timeout 5-37
Contact inputs
actual values 6-4
explained 5-237
FlexLogic operands 5-155
settings 5-236
specifications 2-24
thresholds 5-237
wet and dry connections 3-24

Contact outputs
actual values 6-5
explained 5-239
FlexLogic operands 5-155
settings 5-239
Control elements 5-206
Control power
description 3-14
specifications 2-27
Control pushbuttons
FlexLogic operands 5-150
logic diagram 5-111
settings 5-110
specifications 2-22
Convert Device Settings 10-14
Convert device settings 10-5
Copy of Copy of 10-7
Copy settings to other device 10-7
Counters
actual values 6-6
settings 5-219
CRC alarm 5-124
Critical failure relay specifications 2-27
CSA certification 2-33
CT bank settings 5-128
CT inputs 3-15, 5-6, 5-128
CT trouble
FlexLogic operands 5-152
logic diagram 5-233
settings 5-232
specifications 2-18
CT wiring 3-16
Current bank 5-128
Current demand 5-104
Current metering actual values 6-16
Curves
definite time 5-179, 5-201
FlexCurves 5-140, 5-179
IAC 5-177
IEC 5-176
IEEE 5-175
inverse time undervoltage 5-201
types 5-174
Cutout, panel 3-2, 3-6
CyberSentry
FlexLogic operands 5-150
installation 3-67, 5-23
RS485 port limitation 5-16
security commands 7-4
security overview 2-4
software options 2-30
specifications 2-30
system logs 5-24

D

Data logger
actual values 6-24
clearing 5-26, 7-2
settings 5-103
Data, reading values 6-1
Dataset member is empty message 5-54
Date, set 7-3
DCmA inputs 6-22
actual values 6-22
FlexAnalogs A-13
settings 5-249
specifications 2-24
DCmA outputs
description 3-29
settings 5-251
specifications 2-28
Decommission 10-21
Default password 5-13
Default settings 10-7, 10-8
Definite time curve 5-179, 5-201
Delete files and records 5-26, 10-21
Demand metering
actual values 6-20
specifications 2-24
Demand records, clearing 5-27, 7-2
Demand, current 5-104
Deploy settings 10-7
Device authentication 5-15
Device Connectivity Report in Engineer 4-47
Device information files 1-2, 4-47
Device overview 10-1
Device setup 3-64
Dielectric strength 3-14
Differential
bus 2-18, 5-147, 5-170, 6-16
Digital counters
actual values 6-6
FlexLogic operands 5-152
logic diagram 5-221
settings 5-219
Digital elements
application example 5-218
FlexLogic operands 5-152
logic diagram 5-217
settings 5-216
Digital outputs
see Contact outputs
Dimensions 3-2, 3-6
Direct devices
settings 5-243
status 6-9
Direct I/O
application example 5-244
configuration examples 5-120
settings 5-243

Direct inputs
actual values 6-8
application example 5-244
clearing counters 7-2
FlexLogic operands 5-155
settings 5-243
specifications 2-25
Direct outputs
application example 5-244
clearing counters 7-2
settings 5-244
specifications 2-28
Direct Ring Break message 7-8
Directional overcurrent
see Phase, Ground, and Neutral directional
Directional polarization 5-183
Disconnect switch
FlexLogic operands 5-154
logic 5-139
settings 5-137
Discover button 3-64
Disk space required 3-53
Display settings 5-25
Disposal 10-22
Dispose of battery 10-18
Disturbance detector
FlexLogic operands 5-154
internal 5-131
DNP
connections remaining 6-10
select protocol 5-37
settings 5-38
DOS partition alarm error message 7-10
Downgrade firmware 10-13
Downgrade software 10-13
Download files 10-3
Drag and drop files 4-3
Duplicate device settings 10-7

E

EGD protocol
actual values 6-9
settings 5-89
Electrostatic discharge specifications 2-32
Elements 5-4
End of life 10-22
Energy metering
actual values 6-19
clearing 5-27, 7-2
specifications 2-23
EnerVista UR setup
command line interface C-1
drag and drop files 4-3
event recorder 4-2
firmware upgrade or downgrade 10-13
installation 3-54
oscillography 4-2
requirements 3-53
restart relay 5-1, 5-45
Engineer
command to force user logoff 7-4
create logic diagram 4-32
Error messages 4-40
Warning messages 4-41
Engineer toolbar 4-51
Enhanced front panel
Rev. 1 and 2 explained 3-2
Environment backup 10-9
Equations
definite time curve 5-179, 5-201
FlexCurves 5-179
FlexLogic 5-164
FlexLogic, protect 4-9
IAC curves 5-177
IEC curves 5-176
IEEE curves 5-175
Equipment mismatch error 7-6
Error messages 7-5
device not recognized 10-13
in Engineer 4-40
Ethernet
actual values 6-7
configuration 3-62
Quick Connect 3-67
settings 5-31
Ethernet Global Data settings 5-89
Ethernet port turn on or off 5-31
Event cause indicators 4-20
Event Cause LEDs 4-22
Event recorder
actual values 6-23
clearing 5-26, 7-2
records explained 4-2
specifications 2-22
system logs 5-24
via EnerVista software 4-2
EVENTS setting 5-5
Export settings to file 10-8

F

F485 3-53
Faceplate 3-2, 4-19
Factory default reset 5-7, 5-21
Far-End Fault Indication 5-32
Fast form-C relay specifications 2-27
Fast transient testing specifications 2-32

Features 2-1
Fiber signal loss detection 5-32
File transfer by IEC 61850 5-86
File transfer by TFTP 5-87
Files
  delete 10-21
  download 10-3
  drag and drop 4-3
  protect FlexLogic with password 4-9
  protect with password 4-7
  transfer to relay 4-1
Firmware not supported by EnerVista 10-14
Firmware revision 6-26
Firmware upgrade or downgrade 10-13
Firmware version does not match EnerVista 10-13
Flash memory 10-21
Flash memory data storage 3-15
Flash messages 5-25
Flex State parameters
  actual values 6-7
  settings 5-116
  specifications 2-21
FlexAnalog parameters A-1
FlexCurves
  equation 5-179
  settings 5-140
  specifications 2-21
  table 5-140
FlexElements
  actual values 6-21
  direction 5-166
  FlexAnalogs A-15
  FlexLogic operands 5-152
  hysteresis 5-166
  logic diagram 5-165
  pickup 5-166
  settings 5-164
  specifications 2-21
FlexLogic
  create logic diagram with Engineer 4-32
  edit with equation editor 5-164
  equation editor 5-164
  equation example 5-209
  error messages 7-6
  evaluation 5-158
  example 5-159
  gate characteristics 5-157
  lock equations 4-9
  lock equations to serial number 4-11
  operands 5-150
  operators 5-157
  rules 5-158
  security 4-9
  specifications 2-21
  timer settings 5-164
  worksheet 5-161
Force contact inputs 5-255
Force contact outputs 5-256
Form-A relay
  actual values 6-5
  high-impedance circuits 3-19
  outputs 3-17
  specifications 2-26
Form-C
  actual values 6-5
  critical failure relay 3-14
  order codes 2-8
  outputs 3-17
  replacement modules 2-14
  specifications 2-27
FPGA
  revision 6-26
  upgrade 10-15
Frequency metering
  actual values 6-21
  specifications 2-23
Frequency tracking 6-21
Frequency, nominal 5-129
Front panel
  clear 5-243
  custom labels 4-23
  interface 4-15
  labels 4-23
  language 5-25
  LEDs 4-20
  number of characters 4-15
  password change 4-29
  switch between enhanced and basic 3-2
  use 4-15
  use in EnerVista 4-15, 6-3
  variations 4-19
FUNCTION setting 5-4
Fuse specifications 2-26
Fuses not field-replaceable 10-21

G

G.703 3-38
  wire size 3-38
Gates, logic explained 4-53
Gateway address 5-34
GE type IAC curves 5-177
Getting help 1-2
GOOSE
  actual values 6-22
  error messages 7-9
  FlexAnalogs A-15
  routable, explained 5-52
  settings 5-52
Ground current metering 6-17
Ground IOC
  FlexLogic operands 5-152
  logic diagram 5-192
  settings 5-191
  specifications 2-19

Ground TOC
FlexLogic operands 5-152
logic diagram 5-191
settings 5-190
specifications 2-18
Group 1 switch after powerup 5-170
Grouped elements 5-169
Guarantee D-1

H

HardFiber
interface module described 3-17
order codes for compatible URs 2-8
self-test errors 7-11
Heartbeat messages 5-53, 5-56
Help, getting 1-2
HTTP 5-86
port, close 5-86
Humidity specifications 2-31
Hysteresis 5-166

I

IAC curves 5-177
ICD file 5-61, 5-63, 5-64
IEC 60870-5-103 protocol
explained 5-91
select protocol 5-37
settings 5-90
IEC 60870-5-104 protocol
connections remaining 6-10
port, close 5-88
select protocol 5-37
settings 5-87
IEC 61850 protocol
compatibility with previous release 5-43
error messages 7-9
explained 5-43
file transfer 5-86
heartbeat messages 5-53, 5-56
IID file 10-8
settings in EnerVista 5-42
specifications 2-28
IEC CID files 5-45
IED setup 3-54
IEEE C37.94 communications 3-46, 3-49
IEEE curves 5-175
IID file 3-68, 5-45, 10-8
import preferences 10-9
Import settings file 3-68
Import settings from SCD or CID file 10-11
In service indicator 7-5
In Service LED 3-51
Inputs
AC current specifications 2-24
AC currents 5-128
AC voltage 5-128
AC voltage specifications 2-24
contact input specifications 2-24
contact inputs 5-236, 5-255
DCmA input specifications 2-24
DCmA inputs 3-29
direct input specifications 2-25
IRIG-B 3-33
IRIG-B specifications 2-25
RTD input specifications 2-25
RTD inputs 3-29
virtual 5-238
Installation 3-2, 3-6
activate relay 3-51
add UR devices with auto discovery 3-64
communications 3-32
CT inputs 3-16
RS485 3-32
set relay to Programmed 3-51
settings 5-126
Instantaneous overcurrent
see Phase, Ground, and Neutral IOCs
Interface
front panel 4-15
software 4-1
Internet access 5-86
Inter-relay communication specifications 2-29
Inverse time undervoltage 5-201
IOC
see Phase, Ground, and Neutral IOCs
IP address
enter in software 5-31
enter on front panel 3-56, 4-16
gateway 5-34
rules 3-55
view 5-31
IP rating 2-31
IP54 for enhanced front panel 3-2
IRIG-B
connection 3-33
error messages 7-8
specifications 2-25
ISO standards 2-33

K

Keypad 4-16

L

Labels, front panel 4-23, 4-46
Lamp test 7-3
Language setting 5-25
Laser module 3-37

Latching outputs
application examples 5-241
error messages 7-8
settings 5-240
specifications 2-26
LED test
commands 7-3
FlexLogic operand 5-156
settings 5-106
specifications 2-21
LEDs
clear 5-243
custom labels 4-23
explained 4-20
In Service 3-51
settings 5-108
Trouble 3-51
Link power budget 2-29
Local access denied message 4-30, 5-20
Local access, explained 5-8
Local Setting Authorization 10-14
Lockout from software 5-13
Log in with password 3-67, 5-9, 5-10
Log out
Administrator manually from front panel 5-20
Logic diagram explained 4-30
Logic diagrams, create 4-32
Logic gates, FlexLogic 4-53, 5-158
Logout users forcefully 7-3
Logs, system 5-24
Lost password 5-7
Low on Memory message 7-11

M

MAC address
actual values 6-25
examples 5-29
RxGOOSE 5-59
settings for redundancy 5-32
TxGOOSE 5-55
Maintenance
actual values 6-24
alert to replace battery 7-7
battery replacement 10-16
cleaning 2-33
commands 7-3
module replacement 10-15
upgrade or downgrade 10-13
Manufacturing date 6-25
Maximum CT/VT wire size 3-15
Memory requirements 3-53
Menu navigation 4-16
Message about upgrade over Internet 10-14
Messages
clear front panel 5-243
error 7-5
errors and warnings in Engineer 4-39
Metering
conventions 6-12, 6-13
demand specifications 2-24
frequency specifications 2-23
power specifications 2-23
voltage specifications 2-23
Microsoft Windows requirement 3-53
MMS connections remaining 6-10
Modbus
connections remaining 6-10
Flex State parameters 5-116
port, close 5-37
register entry 5-95
settings 5-37
user map 5-95
Modbus Analyzer 10-1
Model information, view 6-25
Model number 3-1
Modem connection 3-64
Modification file number 6-26
Module 7R 3-39
Module 7S 3-38
Module failure error 7-6, 7-7
Modules
add and check settings not defaulted 10-16
communications 3-32
CT/VT 3-15, 5-6
order codes 2-14
power supply 3-14
replace 10-15
transducer I/O 3-30
Monitor
actual values 10-1
devices 10-1
Monitoring elements settings 5-221
Mounting 3-2, 3-6

N

Nameplate, rear 3-1
NAND gate explained 4-53
Neutral IOC
FlexLogic operands 5-152
logic diagram 5-189
settings 5-188
specifications 2-19
Neutral overvoltage
FlexLogic operands 5-152
logic diagram 5-205
settings 5-204
specifications 2-19

Neutral TOC
FlexLogic operands 5-153
logic diagram 5-188
settings 5-187
specifications 2-18
Non-volatile data storage 3-15
Non-volatile latches
FlexLogic operands 5-152
settings 5-168
specifications 2-21
NOR gate explained 4-53
NOT gate explained 4-53

O

Obtain list of port numbers 5-31
One-shot
error compiling in Engineer 4-40
FlexLogic operators 5-158
Operating system
language 3-54
requirements 3-53
Operating temperature 2-30
Operating times 2-18
Operator command to force logoff 7-4
OR gate explained 4-53
Order codes 2-8
actual values 6-25
update 3-63, 7-3
Oscillatory transient testing specifications 2-32
Oscillography
actual values 6-24
clearing 5-26, 7-2
settings 5-101
specifications 2-22
via EnerVista software 4-2
Out of service 5-1
Outputs
contact outputs 5-239
control power specifications 2-27
critical failure relay specifications 2-27
Fast form-C relay specifications 2-27
Form-A relay 2-26, 3-17
Form-C relay 3-17
Form-C relay specifications 2-27
latching output specifications 2-26
latching outputs 5-240
virtual outputs 5-243
Overcurrent curve types 5-174
Overcurrent curves
FlexCurves 5-179
IAC 5-177
IEC 5-176
Overvoltage
auxiliary 2-20, 5-205
neutral 2-19, 5-204
phase 2-19, 5-153, 5-203

P

Panel cutout 3-2, 3-6
Parallel Redundancy Protocol
actual values 6-10
explained 5-33
settings 5-31
specifications 2-29
Parity 5-28
Part numbering 2-8
Passwords
authentication by device or server 5-15
bypass authentication 5-22
change 4-29
change after installation 3-67
change does not take relay out of service 5-1
command 4-29, 5-9, 5-10
default 5-13
explained 2-4
FlexLogic operands 5-156
lockout 4-30, 5-13
lost password 5-7
requirements 5-8
reset to factory defaults 5-7
rules 5-8
settings 4-29, 5-9, 5-10
settings templates 4-7
wrong entry 4-30
Permissive functions 5-201
Per-unit quantity 5-4
Phase angle metering 6-13
Phase current metering 6-16
Phase directional overcurrent
FlexLogic operands 5-153
logic diagram 5-186
phase A polarization 5-184
settings 5-183
specifications 2-19
Phase IOC
FlexLogic operands 5-153
logic diagram 5-183
settings 5-182
specifications 2-19
Phase overvoltage
FlexLogic operands 5-153
logic diagram 5-204
settings 5-203
specifications 2-19
Phase rotation 5-129
Phase TOC
FlexLogic operands 5-153
logic diagram 5-182
settings 5-180
specifications 2-18

Phase undervoltage
FlexLogic operands 5-153
logic diagram 5-203
settings 5-202
specifications 2-19
Port
Ethernet, turn on or off 5-31
HTTP, close 5-86
IEC 60870-5-104, close 5-88
Modbus, close 5-37
SNTP, close 5-99
TFTP, close 5-87
Port number
combinations with protocols 5-37
connectivity report of those used 4-47
DNP 5-38
HTTP 5-86
IEC 60870-5-104 5-87
list of 5-31
Modbus 5-37
Modbus during installation 3-63
RADIUS 5-18
SNTP 5-99
system log 5-18, 5-19
TFTP 5-87
Power metering
specifications 2-23
values 6-18
Power off, save data first 3-15
Power supply
description 3-14
removal to replace battery 10-16
RH/RL vs SH/SL 10-16
specifications 2-25
Power system settings 5-129
Precision Time Protocol
actual values for port state 6-7
clock settings 5-95
error message 7-8
port behavior 5-32
settings 5-97
specifications 2-28
Preferences
comparing settings 10-7
Engineer 4-47
IEC 61850 5-47
import file 10-9
Preserve custom attributes when importing SCD/CID files . 10-9
Print front panel labels 4-23, 4-46
Process bus
order codes for compatible URs 2-8
overview 3-17
Product information
actual values 6-25
Device Connectivity Report in Engineer 4-47
firmware revision 6-26
Programmed mode 3-51
Protection elements 5-4
Protection Summary interface 3-66, 4-4, 5-207
Protocol selection 5-37
Prototype firmware error message 7-10
PRP
actual values 6-10
explained 5-33
settings 5-31
specifications 2-29
PTP
actual values for port state 6-7
clock settings 5-95
error message 7-8
port behavior 5-32
settings 5-97
specifications 2-28
pu quantity 5-4
Pushbuttons
control FlexLogic 5-150
control logic diagram 5-111
control settings 5-110
control specifications 2-22
user-programmable FlexLogic 5-157
user-programmable logic diagrams 5-115
user-programmable settings 5-111
user-programmable specifications 2-22

Q

Quick Connect 3-66, 3-67

R

RADIUS server
authentication 5-15
setup B-1
RAM Filesystem Fail message 7-7
RAM required 3-53
Reactive power 6-18
Reactive power specifications 2-23
Real power 6-18
Real-time clock
actual values for synchronization 6-7
settings 5-95
Reboot relay
using EnerVista 5-1, 5-45
using relay 7-3
Recloser curves 5-142, 5-180
Redundancy
power supply 10-16
PRP actual values 6-10
PRP explained 5-33
settings 5-31
specifications 2-29
Relay architecture 5-148
Relay maintenance 7-3
Relay name 5-126

Release Notes 10-14
Remote access of front panel in EnerVista 4-15, 6-3
Remote access, explained 5-8
Remote Setting Authorization 10-14
Repair 1-2, 10-21, D-1
Replace battery 10-16
Replace battery message 7-7
Replacement modules 2-14
Requirements for installation 3-53
Reset to factory defaults 5-7, 5-21
Resetting
  FlexLogic operands 5-156
  setting to clear LEDs and messages 5-243
  to factory defaults 5-7
Restart relay
  using EnerVista 5-1, 5-45
  using relay 7-3
Restore settings 10-8
Revision history D-1
RF immunity specifications 2-32
RFI, conducted specifications 2-32
R-GOOSE description 5-52
RH/RL power supply module 10-16
RMS voltage specifications 2-23
Rolling demand 5-106
Routable GOOSE 5-52
RRTD COMM FAIL error 7-11
RS232
  baud rate 5-28
  configuration 3-66
  specifications 2-28
  wiring 3-31
RS422
  configuration 3-42
  timing 3-43
  two-channel application 3-42
  with fiber interface 3-44
RS485
  description 3-32
  limitation with CyberSentry 5-16
  settings 5-28
  specifications 2-28
RTD FlexAnalogs A-13
RTD inputs
  actual values 6-22
  settings 5-250
  specifications 2-25
RTD Trouble message 7-13
Rules for passwords 5-8
RxGOOSE
  actual values 6-22
  error messages 7-9
  FlexAnalogs A-15
  settings 5-57
RxGOOSE Offline error 7-9

S

Save settings 4-1
Saving setting does not take relay out of service 5-1
SCADA protocol selection 5-37
SCD file
  import 10-11
  import preferences 10-9
SCL compatible 5-43
SCL file import 5-61, 5-63, 5-64
  preferences 10-9
Security
  commands 7-4
  delete files and records 10-21
  EnerVista and UR secure with SSH 2-4
  failed authentication lockout 5-21
  forceful user logout 7-3
  lock FlexLogic equations 4-9
  password for settings template 4-7
  passwords for settings and commands 4-29, 5-9, 5-10
  RADIUS server for user authentication B-1
  role-based user access 2-5
  settings 5-19
  software options 2-30
  specifications 2-30
  system and event logs 5-24
Security audit list of port numbers 5-31
Selector switch
  actual values 6-7
  application example 5-214
  FlexLogic operands 5-154
  logic diagram 5-216
  settings 5-209
  specifications 2-22
  timing 5-213
Self-tests
  description 7-5
  error messages 7-5
  FlexLogic operands 5-157
  user-programmable 5-109
Serial number 3-1, 4-11, 6-25
Serial ports
  settings 5-28
  specifications 2-28
Server authentication 5-15
Service life expected 10-3
Service Report 1-2
Setting groups 5-169, 5-170, 5-208
  active setting group 5-169
  FlexLogic operands 5-154
  troubleshooting 5-170

Settings 5-1
back up 5-45, 10-8
change 4-17
change does not take relay out of service 5-1
compare 10-7
control user accounts 5-13
convert 10-5, 10-14
edit 4-17
export 10-8
import 3-68
not updated automatically among computers 3-65
read from device with Modbus Analyzer 10-1
restore 10-8
upgrade 10-5, 10-14
write to device with Modbus Analyzer 10-1
Settings file 5-45
description 4-1
import 3-68
takes relay out of service when loaded 4-2
traceability 4-12
Settings password 4-29, 5-9, 5-10
Settings Save Error message 7-11
Settings templates
description 4-5
edit 4-6
enable 4-5
password protection 4-7
remove 4-9
view 4-7
SFP module fail message 7-10
SH/SL power supply module 10-16
Signal loss detection for fiber 5-32
Signal sources
description 5-5
metering 6-16
settings 5-130
Simulation bit 5-254
Single-line diagram 2-3
Site Targets 10-1
SNTP protocol
accuracy specifications 2-28
error messages 7-8
port, close 5-99
settings 5-99
Software
installation 3-54
interface explained 4-1
language 5-25
system requirements 3-53
update or downgrade 10-13
Source frequency 6-21
Source transfer schemes 5-201
Sources
description 5-5
example of use 5-131
FlexAnalogs A-1
metering 6-16
settings 5-130
Specifications 2-18
Standards, certification 2-33
Status LEDs 4-22
Storage 10-22
Storage media alarm 7-10
Support, technical 1-2
Surge immunity specifications 2-32
Switch
actual values 6-7
control with IEC 61850 5-78
settings 5-137, 5-209
Synchronize
files between offline and online 4-39
Syslog 5-24
System and device information 4-47
System Exception message 7-9
System frequency 5-129
System logs 5-24
System requirements 3-53
System setup 5-128

T

Target messages 7-5
TARGET setting 5-5
Targets menu 7-5
Targets overview by device 10-1
TBD 10-9
TCP port number for web access 5-86
TDR Trouble message 7-13
Technical support 1-2
files 1-2, 10-3
Teleprotection
actual values 6-5
clearing counters 7-2
FlexLogic operands 5-154
logic diagram 5-249
overview 5-247
settings 5-125, 5-247, 5-248
specifications 2-25
Temperature
FlexLogic monitor operand 5-157
monitor 7-9
operating 2-30
Test voltages 3-14
Testing
force contact inputs 5-255
force contact outputs 5-256
lamp test 7-3
LEDs 7-3
self-test error messages 7-5
settings 5-254, 5-255
TFTP
port, close 5-87
put cannot be done 5-87
settings 5-87
The URS file is part of a device folder 10-11

Thermal demand characteristic 5-105
Thermal overload protection
  logic diagram 5-236
  settings 5-233
  specifications 2-20
Tilda on front panel 4-15
Time
  actual values 6-7, 6-24
  FlexLogic timer settings 5-164
  operating 6-25
  overwritten by external source 7-3
  set 7-3
  settings 5-95
Time overcurrent
  see Phase, Neutral, and Ground TOCs
Timeout, connection 5-37
TOC
  ground 5-190
  neutral 5-187
  phase 5-180
  specifications 2-18
Toolbar 4-51
Torque for screws 2-33, 3-12
Traceability
  data 4-13
  overview 4-12
  rules 4-14
  view data 4-14
Tracking frequency 6-21
Transducer I/O
  actual values 6-22
  settings 5-249
  specifications 2-24, 2-25
  wiring 3-30
Triangle in Offline Window 4-39
Trip bus
  FlexLogic operands 5-155
  logic diagram 5-208
  settings 5-206
Trip LEDs 5-108
Trouble indicator 7-5
Trouble LED 3-51
Troubleshooting
  access to device 3-65
  breaker not working 5-217
  Engineer 4-40, 4-41
  error messages 7-5
  setting not working 5-217
  unit not programmed error 5-126
TxGOOSE
  actual values 6-11
  settings 5-53

U

UDP for TFTP 5-87
UL certification 2-33
Unable to access device 3-65
Unable to put relay in flash mode 10-14
Unauthorized access
  commands 5-27
  resetting 7-2
Undervoltage
  characteristics 5-201
  phase 2-19, 5-202
  settings 5-202
Uninstall 10-21
Unit not Calibrated message 7-6
Unit not programmed 5-126
Unit not programmed message 7-6
Unpacking the relay 3-1
Unreturned messages alarm 5-125
Update SCL files prompt 4-39
Update settings with Convert Device Settings 10-5, 10-14
Updates
  device not recognized 10-13
  firmware 10-13
  FPGA 10-15
  instruction manual 3-1
  order code 7-3
  software 10-13
Upgrade device settings 10-5
Upgrade over Internet message 10-14
URS file does not include IEC 61850 configuration 10-11
URS file is part of a device folder 10-11
URS settings file 3-68, 5-45, 10-8
User accounts
  add 5-13
  authentication by device or server 5-15
  passwords for settings and commands 4-29, 5-9, 5-10
User-definable displays
  example 5-118
  invoking and scrolling 5-117
  settings 5-117
  specifications 2-22
User-programmable fault report
  actual values 6-22
  clearing 5-26, 7-2
  settings 5-100
User-programmable LEDs
  custom labels 4-23
  defaults 4-23
  settings 5-108
  specifications 2-21
User-programmable pushbuttons
  FlexLogic operands 5-157
  logic diagrams 5-115
  settings 5-111
  specifications 2-22
User-programmable self-test settings 5-109

V

VAR hour
actual values 6-19
specifications 2-23
Vibration testing specifications 2-32
Virtual inputs
actual values 6-4
commands 7-2
explained 5-239
FlexLogic operands 5-155
logic diagram 5-239
settings 5-238
Virtual outputs
actual values 6-5
explained 5-243
FlexLogic operands 5-155
settings 5-243
Voltage banks 5-128
Voltage deviation specifications 2-32
Voltage elements 5-201
FlexElement is phase to ground 5-167
Voltage metering
actual values 6-17
specifications 2-23
Voltage Monitor error 7-11
Voltage restraint characteristic 5-180
VT inputs 3-15, 3-16, 5-6, 5-128
VT wiring 3-16

W

Warning messages in Engineer 4-41
Warning symbol in Offline Window 4-39
Warning, firmware upload not supported 10-14
Warranty D-1
Watt-hour specifications 2-23
Watt-hours 6-19
Waveform files, view 4-50
Web access port 5-86
Web server protocol 5-86
Windows requirement 3-53
Wire size
CT/VT 3-15
G.703 and fiber interface 3-45
G.703 interface 3-38
RS422 and fiber interface 3-44
RS422 interface 3-42
Wiring diagram 3-13
Withdrawal from operation 10-21
Wrong transceiver message 7-10

X

XOR gate explained 4-53

Y

Yellow caution icon in Offline Window 4-39

Z

Zero-sequence core balance 3-16
Zoning 8-3

GE Vernova
650 Markland Street
Markham, Ontario
Canada L6C 0M1
Worldwide telephone: +1 905 927 7070
Europe/Middle East/Africa telephone: +34 94 485 88 54
North America toll-free: 1 800 547 8629
Fax: +1 905 927 5098
Worldwide e-mail: GA.support@gevernova.com
Website: https://www.gevernova.com/grid-solutions/multilin/